Docusign Envelope ID: 886659D4-2231-44A6-B627-3B2F71797D1A

Date 14th January 2026

FRAMEWORK AGREEMENT

(BASED ON NEC4 FRAMEWORK CONTRACT)

June 2017

Between

NORTH EAST LINCOLNSHIRE BOROUGH COUNCIL

And

NORTH LINCONSHIRE COUNCIL

And

J MCCANN & CO LIMITED

Docusign Envelope ID: 886659D4-2231-44A6-B627-3B2F71797D1A

THIS AGREEMENT is made the 14th day of January 2026 2025

BETWEEEN

(1) NORTH EAST LINCOLNSHIRE COUNCIL whose address is Municipal Offices, Town Hall Square, Grimsby, North East Lincolnshire, DN31 1HU ("**NELC**");

(2) NORTH LINCOLNSHIRE COUNCIL whose address is Church Square House 30-40 High Street, Scunthorpe DN15 6NL ("**NLC**"); and

together "**the *Clients***".

(3) J MCCANN & CO LIMITED (Company Number 08326109) whose registered office is at Mccann House, 110 Nottingham Road, Chilwell, Nottinghamshire, England, NG9 6DQ ("***Supplier***")

together "**the Parties**".

BACKGROUND

(A) The *Clients* have selected the *Supplier* as the framework *Supplier* for the Lots and Geographic Regions stated in the *framework scope.*

(B) The *Clients* and the *Supplier* have agreed to enter into this Framework Agreement, which incorporates the conditions of the NEC4 Framework Agreement. For ease of reference, the NEC4 Framework Agreement conditions have been replicated with additional and modified clauses incorporated to form this consolidated framework agreement.

(C) The *Client* may instruct the *Supplier* under Work Orders in accordance with the terms of the Framework Agreement. Work Orders may be instructed in accordance with the *quotation procedure* under any one of the following NEC4 forms of contract, incorporating the relevant Z-clauses specified within the *quotation procedure*:

(a) NEC 4 Term Service Contract with optional Z clauses.

Conditions of Contract

Actions	**10**	
	10.1	The Parties and the *Clients' Representative* shall act as stated in this Framework Agreement.
	10.2	The Parties and the *Clients' Representative* act in a spirit of mutual trust and co-operation.
Identified and defined terms	**11**	

	11.1	In these *conditions of contract*, terms identified in the Contract Data in italics and defined terms have capital initials.
	11.2	(1) A Corrupt Act is: • the offering, promising, giving, accepting or soliciting of an advantage as an inducement for an action which is illegal, unethical or a breach of truest or • abusing any entrusted power for private gain • any offence under the Bribery Act 2010 in connection with this Framework Agreement or any other contract with the *Clients*. This includes any commission paid as an inducement which was not declared to the *Clients* before ethe date this Framework Agreement came into existence. (2) Framework Information is information which specifies how the Parties work together and is in the document which the Contract Data states it is in. (3) The Parties are the *Clients* and the *Supplier*. (4) A Work Order is a contract to carry out work within the *framework scope*. (5) Affiliate is in relation to a party, any entity that directly or indirectly controls, is controlled by, or is under common control with that party from time to time. (6) Applicable Data Protection Laws are • To the extent UK GDPR applies, the law of the United Kingdom or of a part of the United Kingdom which relates to the protection of personal data, and • To the extent the EU GDPR applies, the law of the European Union or any member state of the European Union to which the *Supplier* is subject, which relates to the protection of personal data. (7) Applicable Laws is all laws, statutes, regulations and codes from time to time in force that relate to this agreement and/or any Work Order under this Framework Agreement.

		(8) Control has the meaning given in Schedule 1124 of the Corporation Tax Act 2010. (9) Default Contract Data has the meaning stated in the *quotation procedure*. (10) Emergency Procurement Criteria is where, due to urgent or emergency circumstances, including risk to loss of life, risk of injury to person and/or risk to material disruption to port operations, the *Client* reasonably considers it advantageous to instruct an Other *Supplier* to supply services or undertake works that would otherwise fall within the Primary *Framework scope* (or, where applicable to a framework agreement with an Other *Supplier*, the Secondary *Framework scope*). (11) EU GDPR is the General Data Protection Regulation ((EU) 2016/679), as it has effect in EU law. (12) Framework Key Performance Indicators (or KPIs) are the key performance indicators that the *Supplier* commits to achieve in performance of its obligations under this Framework Agreement and the Work Orders instructed under it, as stated in the Framework Information. (13) Geographic Region has the meaning ascribed to it in the *framework scope*. (14) Lot has the meaning ascribed to it in the *framework scope*. (15) Other Framework User is an Affiliate of the *Clients* and any Affiliate of such Affiliate of the *Clients*. (16) Other *Supplier* is a *Supplier* other than the *Supplier* engaged by the *Clients* to provide works, goods and/or services, that fall within the *framework scope*. (17) Primary *Framework scope* has the meaning stated in the *framework scope.* (18) Scope Document has the meaning stated in the Framework Information. (19) Secondary *Framework scope* has the meaning stated in the *framework scope.* (20) Work Order Conditions has the meaning stated in the *quotation procedure.* (21) Work Order Particulars are the Work Order Conditions and Default Contract Data selected by the *Client's representative* from those stated in the

		quotation procedure that are to apply to a Work Order (if instructed) (22) Work Order Key Performance Indicators (or KPIs) are the key performance indicators that the *Supplier* commits to achieve under a Work Order, as stated in the Framework Information and to be incorporated into the Work Orders instructed thereunder.
Communications	**13**	
	13.1	Each communication which the contract requires is communicated in a form which can be read, copied and recorded.
	13.2	A communication has effect when it is received at the last address notified by the recipient for receiving communications or, if none is notified, at the address of the recipient stated in the Contract Data.
The *Client's representative*	**14**	
	14.1	The *Clients* may replace the *Clients Representative* after notifying the *Supplier* of the name of the replacement.
Other Framework Users and Third Party Rights	**15**	
	15.1	Any Other Framework User may instruct a Work Order under this Framework Agreement as if they were the *Clients*, provided they comply with the obligations of the *Clients* under clause 23 in respect of the same.
	15.2	The rights under clause 15.1 shall be conferred upon the Other Framework Users under the Contract (Rights of Third Parties) Act 1999.
	15.3	Save as provided under clause 15.1 and 15.2, this Framework Agreement does not give rise to any rights under the Contracts (Rights of Third Parties) Act 1999 to enforce any term of this Framework Agreement.
Assignment	**16**	
	16.1	The *Supplier* shall not assign, transfer, mortgage, charge, subcontract, delegate, declare a trust over or

		deal in any other manner with any of its rights and obligations under this Framework Agreement.
	16.2	The *Clients* may at any time assign, mortgage, charge, delegate, declare a trust over or deal in any other manner with any or all of its rights under this Framework Agreement.
Variation	**17**	
	17.1	No variation of this Framework Agreement shall be effective unless it is in writing and signed by the parties (or their authorised representatives).
Corrupt Acts	**18**	
	18.1	The *Supplier* does commit any Corrupt Act.
	18.2	The *Supplier* procures that none of its Affiliates and that no subcontractor engaged by it in relation to any Work Order commits any Corrupt Act.
	18.3	The *Supplier* notifies the *Clients* forthwith if it has knowledge of, or has reasonable grounds to suspect the occurrence of, the commission of a Corrupt Act by it, any of its Affiliates and/or any of its subcontractors. Such notice shall include details of the known or suspected Corrupt Act and, if applicable, the grounds for suspicion. The *Supplier* co-operates with the *Client* in the investigation of any such Corrupt Act or suspected Corrupt Act.
	18.4	The *Supplier's* obligations under this clause 18 shall survive the termination (for any reason) of this Framework Agreement.
Interpretation	19	
	19.1	This Framework Agreement shall be binding on, and ensure to the benefit of, the parties to it and their respective personal representatives, successors and permitted assigns, and references to any party shall include that party's personal representatives, successors and permitted assigns.
	19.2	A reference to any agreement or document (including this agreement) is a reference to such agreement or document, as varied or novated from time to time.

	19.3	Any words following “including”, “include”, “in particular”, “for example” or any similar expression shall be construed as illustrative and shall not limit the sense of the words, description, definition, phrase or term preceding those terms.
Waiver	19A	
	19A.1	A waiver of any right or remedy under this Framework Agreement or by law is only effective if given in writing and shall not be deemed a waiver of any subsequent right or remedy.
	19A.2	A failure or delay by a party to exercise any right or remedy provided under this Framework Agreement or by law shall not constitute a waiver of that or any other right or remedy, nor shall it prevent or restrict any further exercise of that or any other right or remedy. No single or partial exercise of any right or remedy provided under this agreement or by law shall prevent or restrict the further exercise of that or any other right or remedy
Rights and remedies	19B	
	19B.1	The rights and remedies provided under this Framework Agreement are in addition to, and not exclusive of, any rights or remedies provided by law.
Severance	19C	
	19C.1	If any provision or part-provision of this Framework Agreement is or becomes invalid, illegal or unenforceable, it shall be deemed deleted, but that shall not affect the validity and enforceability of the rest of this Framework Agreement.
	19C.2	If any provision or part-provision of this Framework Agreement is deemed deleted under clause 19C.1 the parties shall negotiate in good faith to agree a replacement provision that, to the greatest extent possible, achieves the intended commercial result of the original provision
Entire Agreement	19D	
	19D.1	This Framework Agreement constitutes the entire agreement between the parties and supersedes and extinguishes all previous agreements, promises,

		assurances, warranties, representations and understandings between them, whether written or oral, relating to its subject matter.
	19D.2	Each party agrees that it shall have no remedies in respect of any statement, representation, assurance or warranty (whether made innocently or negligently) that is not set out in this Framework Agreement. Each party agrees that it shall have no claim for innocent or negligent misrepresentation based on any statement in this Framework Agreement
No partnership or agency	19E	
	19E.1	Nothing in this Framework Agreement is intended to, or shall be deemed to, establish any partnership or joint venture between any of the parties, constitute any party the agent of another party, or authorise any party to make or enter into any commitments for or on behalf of any other party.
	19E.2	Each party confirms it is acting on its own behalf and not for the benefit of any other person
Counterparts	19F	
	19F.1	This Framework Agreement may be executed in any number of counterparts, each of which shall constitute a duplicate original, but all the counterparts shall together constitute the one agreement.
Governing law and jurisdiction	19G	
	19G.1	This Framework Agreement and any dispute or claim (including non-contractual disputes or claims) arising out of or in connection with it or its subject matter or formation shall be governed by and construed in accordance with the law of England and Wales.
	19G.2	Each party irrevocably agrees that the courts of England and Wales shall have exclusive jurisdiction to settle any dispute or claim (including non-contractual disputes or claims) arising out of or in connection with this Framework Agreement or its subject matter or formation.

The Parties' obligations	**20**	
	20.1	The *Supplier* obeys an instruction which is in accordance with the Framework Agreement and is given by the *Clients' Representative*.
	20.2	The *Supplier* attends meetings with the *Clients' Representative* and others as stated in the Framework Information.
	20.3	The *Supplier* does not do any work until it has received a Work Order for that work.
	20.4	The Parties comply with their respective obligations as stated in the Framework Information.
	20.5	The *Supplier* provides details of its performance against the Framework KPIs as stated in the Framework Information.
	20.6	The *Supplier* provides details of its performance against Work Order KPIs in respect of each uncompleted Work Order as stated in the Framework Information.
	20.7	The *Client* has no obligation to, gives no guarantee to, and makes no representation that it will, instruct the *Supplier* under any Work Order or otherwise instruct any amount of work or services to the *Supplier* under this Framework Agreement.
	20.8	The *Supplier* allows the *Clients* (or its professional advisers) to access the *Supplier's* premises, personnel, systems and relevant records to verify that any sums charged to the *Client* under any Work Order are accurate. The *Clients* and its professional advisers shall have the right to take copies of any records which they reasonably require and remove such copies and the *Supplier* shall provide the necessary facilities to assist in copying free of charge.
	20.9	The *Supplier* complies with the Applicable Data Protection Laws and any additional data protection requirements stated in the Framework Information.

Clause not used	**21**	
Clause not used	**22**	
Quotation	**23**	
	23.1	If the *Supplier* is to be considered for a proposed Work Order, the *Client's representative* provides: • the Scope, including any Work Order KPIs that apply, • the Site Information, • the pricing document, • the Work Order Particulars and any additional information within Contract Data Part One, in each case as applicable for the work, and instructs the *Supplier* to provide a quotation.
	23.2	The *Supplier* provides a quotation in accordance with the *quotation procedure* and submits details of its assessment with the quotation. The *Supplier's* assessment is made using the *quotation information*.
	23.3	The *Clients' Representative* assesses the *Supplier's* quotation in accordance with the *quotation procedure*.
	23.4	The *Clients' Representative* replies to the submission within the period stated in the Contract Data. The reply is • the issue of a Work Order accepting the quotation in accordance with clause 23.6, • an instruction to submit a revised quotation or • a notification that the proposed Work Order will not be issued to the *Supplier*.
	23.5	If a revised quotation is instructed, the *Clients' Representative* advises the *Supplier* of the reasons for not accepting the quotation. The *Supplier* submits a revised quotation within the period stated in the instruction.
	23.6	Where the *Clients' Representative* issues a Work Order accepting a quotation, the Work Order incorporates the

		information provided by the *Client Representative* under clause 23.1and • the *Supplier's* quotation (subject to the *quotation procedure)* • and any other conditions, data or documentation agreed by the Parties prior to entering into the Work Order and is executed by both party as a deed and no Work Order shall come into effect until it is executed as a deed in accordance with this clause 23.6.
	23.7	The *Clients' Representative* may (at its sole discretion) obtain quotations from any Other *Supplier*(s) in respect of any proposed Work Order for which it instructs the *Supplier* to provide a quotation.
	23.8	The *Clients' Representative* may (at its sole discretion) instruct any Other *Supplier* to undertake work that falls within the *framework scope* (including both Primary *Framework scope* and Secondary *Framework scope*), including any work that was subject of a proposed Work Order for which it instructed the *Supplier* to provide a quotation.
Confidentiality	**24**	
	24.1	Each party does not, until at least six years after termination or expiry of this Framework Agreement, disclose to any person any confidential information concerning the business, affairs, *Client*s or *Supplier*s of the other party, except as permitted by clause 24.2.
	24.2	Each party may disclose the other party's confidential information: • to its employees, officers, representatives, *Supplier*s, sub-contractors or advisers who need to know such information for the purposes of exercising the party's rights or carrying out its obligations under or in connection with this agreement. Each party shall ensure that its employees, officers, representatives, *Supplier*s, sub-contractors or advisers to whom it discloses the other party's confidential information comply with this clause 15; and

		• as may be required by law, a court of competent jurisdiction or any governmental or regulatory authority.
	24.3	No party shall use any other party's confidential information for any purpose other than to exercise its rights and perform its obligations under or in connection with this Framework Agreement or under any Work Order instructed hereunder.
Completion	**30**	
	30.1	After the *end date*, • the *Clients' Representative* does not issue a Work Order and • the *Supplier* completes work under Work Orders issued before the *end date*.
	30.2	The *Client* may at its sole discretion extend the *end date* by 12 months on four occasions only, provided the *Clients* provide written notice of the extension to the *Supplier* at least one month before the *end date* and provided that the maximum term of this Framework Agreement (as extended) shall be eight years.
Termination	**90**	
	90.1	The *Client* may (at its sole discretion) forthwith terminate both Party's obligations under the Framework Agreement at any time by notifying the *Supplier*. Termination under this clause takes effect upon the *Client* giving notice to the *Supplier*.
	90.2	Upon termination taking effect, • the *Clients' Representative* does not issue a Work Order and • the *Supplier* completes work under Work Orders issued before the notification.
	90.3	Without prejudice to the generality of clause 90.1, the Clients' right to terminate under clause 90.1 shall be exercisable where any of the provisions of paragraph 78 (2) of the Procurement Act 2023 apply.

Contract Data

Contract Data

Part One – Contract Data provided by the *Client*

The Data which will apply to all work under the Framework Contract is

	The conditions of contract are the clauses of the NEC4 Framework Contract June 2017 and any additional conditions of contract.		
	The *Client*s are:		
	Name:	North East Lincolnshire Council	
	Address for communications:	Municipal Offices, Town Hall Square, Grimsby, North East Lincolnshire, DN31 1HU	
	Address for electronic communications:	LegalAdmin@nelincs.gov.uk	
	Name:	North Lincolnshire Council	
	Address for communications:	Church Square House 30-40 High Street, Scunthorpe DN15 6NL	
	Address for electronic communications:	Email address redacted	
	The *Client*s' Representative are		
	Name:	North East Lincolnshire Council	
	Address for communications:	Municipal Offices, Town Hall Square, Grimsby, North East Lincolnshire, DN31 1HU	
	Address for electronic communications:	legaladmin@nelincs.gov.uk	
	Name:	North Lincolnshire Council	

	Address for communications:	Church Square House 30-40 High Street, Scunthorpe DN15 6NL	
	Address for electronic communications:	Email address redacted	
	The Framework Information is in Schedule 1		
	The *framework scope* is in Schedule 2		
	The *selection procedure* is in Schedule 3		
	The *quotation procedure* is in Schedule 4		
	The *end date* is four years from the date of the contract, subject to any extension or earlier termination under this Framework Agreement		
	The period for reply to a *Supplier's* quotation		2 weeks
If additional conditions of contract are required	The *additional conditions of contract* are Incorporated into the contract.		

Work Order Conditions and Default Contract Data that apply to Time Charge Orders are

Not applicable

Work Order Conditions and Default Contract Data that apply to Work Orders are

As detailed in, and as specified by the *Clients Representative* in accordance with, Schedule 5.

IN WITNESS WHEREOF the Parties have caused this agreement to be executed as a deed by their duly authorised representatives and delivered on the date first above written.

Executed as a Deed for and on behalf of the North East Lincolnshire Council

THE COMMON SEAL of
NORTH EAST LINCOLNSHIRE BOROUGH COUNCIL
Was affixed to this deed
in the presence of: Signature and name redacted

Authorised Officer [redacted]

[redacted]

Executed as a Deed for and on behalf of the North Lincolnshire Council

Seal Redacted

THE COMMON SEAL OF
NORTH LINCOLNSHIRE COUNCIL
Was affixed to this deed
in the presence of:

Authorised Officer

Docusign Envelope ID: 886659D4-2231-44A6-B627-3B2F71797D1A

IN WITNESS WHEREOF the Parties have caused this agreement to be executed as a deed by their duly authorised representatives and delivered on the date first above written.

Executed as a Deed for and on behalf of the North East Lincolnshire Council

THE COMMON SEAL of
NORTH EAST LINCOLNSHIRE BOROUGH COUNCIL
Was affixed to this deed
in the presence of:

Authorised Officer

Executed as a Deed for and on behalf of the North Lincolnshire Council

THE COMMON SEAL OF
NORTH LINCOLNSHIRE COUNCIL
Was affixed to this deed
in the presence of:

[redacted]

Authorised Officer

Seal and Seal Number Redacted

Part Two – Contract Data provided by the *Supplier*

The Data which will apply to all work under the Framework Contract is

	The *Supplier* is		
	Name:	J Mccann & Co Limited	
	Address for communications:	McCann House,110 Nottingham Road,Chilwell,Nottingham, NG9 6DQ	
	Address for electronic communications:	enquiries@jmccann.co.uk	
	The *quotation information* is in Schedule 6		

Executed as a Deed for and on behalf of the *Supplier*

By: [redacted]

Name: [redacted]

Signatures and Names Redacted

Title: Director

Witnessed by: [redacted]

Signatures and Names Redacted

Printed name: [redacted]

Address: 110 NOTTINGHAM ROAD

CHILWELL

NOTTINGHAM, NG9 6DQ.

Schedule 1: Framework Information

The Framework Information incorporates the documents and provisions as specified in this Schedule 1.

Schedule 2: *framework scope*

1 The following Sections of the Scope Document are incorporated into the *framework scope*

ITT Section B - Part A Scope
Appendix A - Background – NELC
Appendix B - Background – NLC
Appendix - Job Request Form
ITT Section B - Part B Scope – NELC

Lot 1 NELC Drawings

SLCD0005A-Model
SLCD0006A-Model
SLCD0007A-Model
SLCD0009A-Model
SLCD0009-Model
SLCD0010A-Model
SLCD0015A-Model
SLCD0016-Model
SLCD0017-Model
SLCD0018A-Model
SLCD0019A-Model
SLCD0022A-Model
SLCD0023A-Model
SLCD0024-Model
SLCD0025-Model
SLCD0026-Model
SLCD0027A-Model
SLCD0028A-Model
SLCD0029-Model
SLCD0030A-Model
SLCD0031A-Model
SLCD0032A-Model
SLCD0033A-Model
SLCD0034A-Model
SLCD0035A-Model
SLCD0036-Model
SLCD0001-Model
SLCD0002-Model
SLCD0003-Model
SLCD0004-Model

Lot 1 NELC Asset Register

ITT Section B - Part C Scope - NLC

Lot 2 NLC Drawings

O_Street Lighting_Road Lighting Design_Standard Docs_NSD DWGS_NLRL0007 Model (1)
O_Street Lighting_Road Lighting Design_Standard Docs_NSD DWGS_NSD14105 Model (1)
O_Street Lighting_Road Lighting Design_Standard Docs_NSD DWGS_NSD14109 Model (1)
O_Street Lighting_Road Lighting Design_Standard Docs_NSD DWGS_NSD14116 Model (1)
O_Street Lighting_Road Lighting Design_Standard Docs_NSD DWGS_NSD14119 Model (1)

Lot 2 NLC Asset Register

Schedule of Amends

Invitation to Tender

Section B – Scope Part A

Framework for the Installation and Maintenance of Road Lighting, Traffic Signs and Bollards for North East and North Lincolnshire Councils

YORtender Ref 100182

FTS Ref: 2025/S 000-031840

Please refer to Appendix A and Appendix B for Client background information.

For the purposes of this document:

North East Lincolnshire Council and North Lincolnshire Council will be known as Client's.

Client's Service Manager relates to either North East Lincolnshire Council Street Lighting Department and or North Lincolnshire Council Street Lighting Department.

1. Overview

1.1. Introduction

1.1.1. Both Client's currently operates a 'Framework Agreement' for Street Lighting Term Maintenance Services. This Framework Agreement expires 31 October 2025 and the Client is now seeking to establish a new Framework Agreement with a suitably qualified and experienced Supplier for " Street Lighting Term Maintenance" services and other related works.

1.1.2. These services would only be required to be provided within the geographic boundaries of North Lincolnshire (NL) and North East Lincolnshire (NEL).

1.1.3. The Street Lighting inventory comprising of approximately the following:

NEL 22,898 Illuminated Units

- 20,416 Lighting Columns
- 2482 Signs and Bollards
- 482 Lighting Columns - Lincolnshire Housing Partnership

NL 25,436 Illuminated Units

- 24,031 Lighting Columns

- 1223 Signs
- 74 Beacons
- 108 Bollards

1.1.4. The Supplier will be responsible for the following Asset activity within the public highway:

- Street and Car Park Lighting
- Festive and feature Lighting – provision, installation, removal and maintenance of Summer and Christmas Illuminations and assistance with official switch on occasions
- Illuminated and non-illuminated bollards
- Traffic Signs and Posts
- CCTV Masts
- Feeder pillars, cabling and power supply equipment
- Emergency Call-Out (ECO) service, including Out of Hours and accident damage remedial works in the event of unsafe occurrences
- Improvement and general works of street lighting, both planned and reactive maintenance of street lighting equipment, illuminated/electrified street furniture, including lamp columns, road signs, bollards, traffic monitoring equipment, duct/cable laying, electrical fittings, etc.
- Bulk Lamp change
- Night time scouting and reporting of defective/non lit equipment
- Lighting Central Management System (CMS)
- Testing of electrical equipment on the public highway
- Testing of structural integrity and fitness for purpose of lamp columns.
- Works may include professional services in additional to physical, construction works to support Minor and Major highways and transport schemes

1.2. **Aims**

1.2.1. The procurement of the Framework Agreement will primarily contribute to the Client's priority of North East Lincolnshire residents should 'Live in a safe environment'.

1.3. **Scope**

1.3.1. Each Client is seeking to establish a Framework Agreement with a suitably qualified and experienced supplier of "Street Lighting Term Maintenance" Services.

1.3.2. The two separate lot requirements are as described below:

Lot 1 – North East Lincolnshire Council

The Works consist of the installation and maintenance of street and car park lighting, illuminated signs and bollards along with the installation and maintenance of seasonal illuminations and other works as required across the borough in North East Lincolnshire (NEL).

The Supplier will be required to provide:

General Maintenance:
Repair of outages to street lights, footpath lights, car park lighting, illuminated traffic signs and bollards, Bulk lamp change, cleaning and maintenance of illuminated traffic signs and bollards and undertake any other programmed maintenance.

Additional Maintenance:
Minor improvement works and electrical safety testing;
Provision and removal of temporary advance works signs and sign plates for pending Highways schemes.

Seasonal Illuminations:
Provision, installation, removal and maintenance of both Summer and Christmas Illuminations and assistance with official switch-on occasions.

Road Safety:
Provision of services associated with the installation, maintenance and re-location of Speed Activated signs and Driver Feed Back Signs.

Emergency attendance, in the event of unsafe occurrences.

Night time scouting and reporting of defective/non-lit equipment.

The Supplier may also be required to support during the contract:

Capital Works Schemes:
Renew defective road lighting columns and improvements to public lighting, Improve/ renew road lighting in conjunction with major highway maintenance schemes.

Section 38 and 278 Works:
Provision of services associated with the installation of Road Lighting equipment related to works required by developers.

Lot 2 - North Lincolnshire Council

The Works consist of the installation and maintenance of street and car park lighting, illuminated signs and bollards along with the installation and maintenance of seasonal illuminations and other works as required across the borough in North Lincolnshire (NL).

The Supplier will be required to provide, as required:

General Maintenance:
Repair of outages to street lights, footpath lights, car park lighting, illuminated traffic signs and bollards, Bulk lamp change, cleaning and maintenance of illuminated traffic signs and bollards and undertake any other programmed maintenance.

Additional Maintenance:
Minor improvement works and electrical safety testing;
Provision and removal of temporary advance works signs and sign plates for pending Highways schemes.

Seasonal Illuminations:
Provision, installation, removal and maintenance of both Summer and Christmas Illuminations and assistance with official switch-on occasions.

Road Safety:
Provision of services associated with the installation, maintenance and re-location of Speed Activated signs and Driver Feed Back Signs.

Emergency attendance, in the event of unsafe occurrences.

Night time scouting and reporting of defective/non-lit equipment.

The Supplier may also be required to support during the contract:

Capital Works Schemes

Renew defective road lighting columns and improvements to public lighting, Improve/ renew road lighting in conjunction with major highway maintenance schemes.

Section 38 and 278 Works
Provision of services associated with the installation of Road Lighting equipment related to works required by developers.

1.3.3. One Supplier will be appointed for each lot. Tenderers can bid for one lot or both lots.

2. Requirements

2.1. Tenderers should read this document in conjunction with the following documents listed below:

ITT Section B - Part B Scope – NELC

ITT Section B - Part C Scope – NLC

Appendix A – Background – NELC

Appendix B – Background - NLC

3. Contract Term

3.1. The Framework Agreement is expected to commence for each Client on

01 ece e 2025 for a period of 4 years and will expire on 31 e e 2029.

3.2. The end date is four years from the date of the contract, subject to any extension or earlier termination under this Framework Agreement.

3.3. The Client may at its sole discretion extend the end date by 12 months on four occasions only, provided the Clients provide written notice of the extension to the Supplier at least three month's before the end date and provided that the maximum term of this Framework Agreement (as extended) shall be eight years.

3.4. Either Client reserves the right to terminate the Framework Agreement at Years 5,6,7 and or 8 based on the performance of the Framework Agreement. The Client may include the KPI data identified in Schedule 1 and or 2 of this document and Performance Requirements returns as part of the termination review. However, the Client's decision shall not be limited to this in0formation, and any other relevant information may be taken into account.

3.5. If, at any point, the framework is no longer viable or proving value for money each Client reserves the right to give ninety (90) days-notice in writing to inform Suppliers of their intention to terminate or re-procure.

3.6. The Framework Agreement will not in any legal manner whatsoever constitute a contract between each Client and the Supplier. Any order placed by either Client with the Supplier under the framework arrangement, shall become a separate and independent contract in its own right, once accepted by the Supplier. In each and every such case, the terms of the framework arrangement and the conditions therein shall govern the services procured.

4. Call off Arrangements

4.1. The Call Off Arrangements for this Framework Agreement will utilise NEC 4 Term Service Contract 2017 with a Schedule of Amendments**.**

4.2. **North East Lincolnshire Council**

The Client will enter into the NEC 4 Term Service Contract 2017 with a Schedule of Amendments Call of Contract. Work Orders will be issued by the Client's Service Manager(s).

4.3. **North Lincolnshire Council**

The Client will issue a Job Request Form (Appendix C) and a Client Purchase Order as instructions to undertake the works.

4.4. **Collateral Warranty for Design Works**

4.4.1. "A collateral warranty is an agreement given by a Supplier's Subcontractor or consultant to an interested third party (e.g., funder, purchaser, tenant) to give that party a contractual right to pursue the warrantor if it suffers loss due to the warrantor breaching its obligations under the underlying contract" (LexisNexis 2023).

4.4.2. From time to time the Supplier may be required to undertake elements of works that include design responsibility. The design responsibility and or disciplines will be defined in the Scope Documentation issued by the Client, alongside the professional liability level to be held. It is the Suppliers' responsibility for ensuring that their supply chain hold these requirements. When the Supplier's is approaching their supply chain for quotations, they should be advising of any insurance requirements/accreditations that they should hold. These requirements are stated in the Scope Documentation issued by the Client, and forms part of the Supplier's contract.

4.4.3. If the Supplier or any other Subcontractor in the chain is unable to provide the level of cover/accreditation required, this should be communicated to the Supplier, who then should raise a written quey with the Service Manager. If the amend is rejected during the quotation period by the Client, it will be suggested that, if the Supplier or the Subcontractor is unable to amend the main policy, a separate policy is taken out specifically for that element of the project. The cost should then be included in the Subcontractor's quotation to the Supplier.

4.4.4. The Supplier shall, when requested by the Client, within 14 days of such request, execute and deliver to the Client, including other beneficiaries a deed or deeds of collateral warranty in favor of Client, and or other beneficiaries.

4.4.5. If the Supplier does not provide the warranties within 14 days of the Client's request, the Client will be entitled to issue in writing to the

Supplier a notice of breach of contract. If such breach is not rectified by the Supplier within 14 days after issue of such notice, then the Client shall not be liable to pay any amount in respect of the elements of the works to which the default relates while such breach remains to be rectified.

5. Contract Management

5.1. Mobilisation/Implementation

5.1.1. The Supplier will be required to attend a Contract Mobilisation meeting, and provide a draft Mobilisation Plan, which will be agreed between the Supplier and each Client prior to the commencement of the Framework Agreement.

5.1.2. During the mobilisation period, each Client's Service Manager will confirm to the Supplier the requirements and frequency of the Scope Requirements to take place from the Contract Date for the first year of service.

5.1.3. During the mobilisation period the Supplier will undertake a site risk assessment for each site.

5.1.4. The Supplier will submit their Quality Plan and all supporting documentation 1 month following the contract commencement date to the Client's Service Manager(s) for review.

5.1.5. The Supplier within 3 months following the contract commencement date have a Quality Management System in place for the delivery of the contract.

5.2. Progress Meetings

5.2.1. The Supplier will be required to attend with the Client's Service Manager(s) progress meetings to discuss the overall management of the Works.

5.2.2. The progress meetings will be held at the Supplier's Depot every two months.

5.2.3. The Client's Service Manager will notify the Supplier 7 days prior to the propose meeting date. The Supplier is to inform any nominated or other sub-contractors when their attendance is required.

5.3. Bi Annual Review

5.3.1. The Supplier will be required to attend bi -monthly progress meetings. The Service Manager will arrange and chair the meetings. The Supplier is to inform any nominated or other sub-contractors when their attendance is required. The Service Manager will be responsible for the

production and circulation of Minutes of Meetings. Where practicable the meetings will be held at the Service Manager's offices with online meetings being held as necessary. Other meetings may be held as and when required by the Service Manager.

5.3.2. The bi-monthly progress meeting will be held with the Supplier to review the Supplier's performance over the previous six months in accordance with the Key Performance Indicators. The Supplier is to submit a progress report to the Service Manager 7 days prior to each progress meeting.

5.4. **Service Delivery**

5.4.1. The Supplier is expected to work in close co-operation with the Client and Others and adopt a positive and flexible approach in delivering the service to help achieve the Client's declared aims. The Supplier should promote a positive image within both boroughs and carry out all activities in a professional and customer focussed manner.

5.4.2. The Supplier during the contract should where possible strive to maintain the same key personnel. If the Supplier is required to amend any key personnel the Supplier will be required to notify the Client's Service Manager(s) in writing within 30 calendar days.

5.4.3. The Supplier will need to ensure succession planning is in place to ensure there is no disruption to service delivery whereby a change to key personnel occurs.

5.5. **Innovation, Efficiency and Value Engineering proposals**

5.5.1. The Supplier will continually review and identify where possible innovation or efficiency and or value engineering proposals to the Work Orders during the contract that contribute to the following:

- Measures that can be implemented at zero additional cost to the Client and/or Supplier;
- Measures that can be implemented that may reduce the costs to the Client and/or Supplier
- Measures that can be implemented that may give rise to an additional cost to the Client and/or Supplier.
- Provide the same level of service at a lower cost to the Client;
- Provide an increased level of service for the same, or lower, cost to the Client;
- Improve the performance levels at a potential increased cost to the Client;
- Reduce longer term expenditure and or an overall cost benefit of its serviceable life. (This may result in a higher initial cost but reduced

long term maintenance and removal/demolition/decommissioning cost.)

5.5.2. The Supplier's proposals will include a rough order of magnitude of the overall benefits. If the Client's Service Manager(s) requires a detailed proposal, they will request this in writing from the Supplier.

5.5.3. Whereby the Supplier proposal results in a benefit in terms of costs or improved timescales the cost will be shared 50/50 between the Supplier and the Client after a level of Supplier costs (if any) which have been agreed between both parties have been deducted.

5.6. **Schedule of Rates Uplift**

5.6.1. The costs identified in the schedule of rates will be reviewed annually with any increase agreed at no greater than the appropriate indices for Highways.

5.6.2. The Supplier will be reissued with a new schedule of rates, which they will need to verify, sign and return. This will be undertaken 1 month prior to November each year.

5.6.3. Whereby a Client Software System is used the new rates will be updated by the Client's Service Manager(s).

5.7. **Performance Measurement and Assessment**

5.7.1. As part of this contract, the following Key Performance Indicators (KPI's) located in Schedule 1 and Schedule 2 of this document for each Client are to be achieved by the Supplier. These will be measured by the method of measurement stated within each Appendix and will form part of each Client's Framework Agreement.

5.7.2. The Supplier must also:

- Deliver the Social Value and Carbon Reduction outcomes during the lifetime of the contract term that was committed within their tender submission.
- Evidence progress, impact made and achieved outcomes in a performance report to be emailed to the Client's Service Manager one week in advance of each Bi Annual Contract Management meeting.

5.7.3. The Performance report shall include:

1. A summary of the Social Value and Carbon Reduction activities undertaken during the reporting period.
2. Data and metrics demonstrating the impact of the activities.

3. Any challenges encountered in delivering the Social Value and Carbon Reduction outcomes and outputs.

6. Supplier's Employees

6.1. The Supplier is required to adhere to the following Code of Conduct when working on the Public Highway:

- The Supplier /subcontractors shall be polite and courteous and respond quickly and effectively to Service Manager complaints.
- The Supplier /subcontractors must be suitably dressed (preferably displaying the name of the company that they are working for).
- Supplier subcontractors must not remove any base layer clothing at any time while on site.
- Supplier/subcontractors must always have suitable identification with them (preferably a company id badge with a picture).
- The Supplier should not smoke, vape, work under the influence of alcohol, use bad language, play music, display offensive material of a pornographic, racist, sexist or political nature.
- The Supplier shall ensure that all the Public Highway and the Asset are left in the same condition as they were at the start of the works.
- Where the works are incomplete at the end of a working day the Supplier shall ensure that the working area is secure, and does not impact and or cause a hazard on the Public Highway or to the general public.

6.2. The Supplier shall be required to maintain a log of all incidents of violence towards Supplier's staff and Subcontractors from members of the public whilst undertaking works on behalf of the Client. These incidents must be notified to the Client's Service Manager within 24 hours.

- All other incidents (non-violent), that affect the works must be notified to the Client's Service Manager as soon as reasonably practicable.
- The Client does not expect the Supplier's staff to tolerate abuse or threats – and are actively encouraged to remove themselves to a safe place and not return for as long as necessary until the threat has suitably passed.

7. Sub-Contractors

7.1. The Supplier will not sub-contract the performance of any of the services of this Contract without the either Client's express prior written consent. The Supplier will be responsible for any services it sub-contracts to a third party as if it had performed those.

7.2. The Supplier will ensure that any subcontractor that is engaged for the services of this Framework Agreement shall be suitably qualified and competent for the work they have been engaged to provide and adhere to the terms of the Framework Agreement.

7.3. The Supplier and any subcontracted parties must adhere to all relevant standard and best practices identified throughout this document and all supporting appendices.

8. Assets - North East Lincolnshire Council

8.1. The Supplier will provide one handheld mobile/tablet device to aid the delivery of Lot 1.

8.2. The Supplier will be liable to cover the cost of any damage, and or loss of the device, and any other associated equipment whilst in their care. If the device is stolen the Supplier is to report this to Client's Service Manager(s) immediately.

8.3. The device must be kept up to date with manufacturer or network provided patches. As a minimum patches should be checked for weekly and applied at least once a month.

8.4. The device must not be "jailbroken" or have any software/firmware installed which is designed to gain access to functionality not intended to be exposed to the Supplier

8.5. The Supplier must not load pirated software or illegal content onto their devices.

8.6. Applications must only be installed from official platform-owner approved sources. Installation of code from un-trusted sources is forbidden.

8.7. The Anti-Virus software pre-installed on the device must be kept up to date.

8.8. The device must not be used in any form that may bring disrepute to the Client, in doing so the Supplier will understand that they will be liable for any proceedings and consequential disciplinary actions.

8.9. The device and any peripherals issued are to be kept in a locked secure environment whilst not in use.

9. Permits and Permissions

9.1. The Supplier will be required to apply for and manage the Street Work's permit process via the Client's Street Works Manager (s) for planning and managing works, using the approved forms.

9.2. The Supplier should obtain any permits or permissions and ensure they remain in place for the full contract term as necessary. This includes but not limited to any consents necessary for:

- Planning permission.
- Permits to work.
- Highway Authority requirements.

9.3. The Supplier will ensure when creating all Street Works notices, the notices shall include appropriate timescales with site start dates and finish dates, and shall apply for variations and extensions, as necessary.

9.4. Both Client's operates a permit scheme, and the Supplier shall comply with all relevant sections of the relevant legislation and directions.

9.5. The Supplier should be aware they are liable for Fixed Penalty Notices for not complying with the Street Works Permit regulations.

10. Construction Design and Management (CDM) Regulations 2015

10.1. The purpose of the Framework Agreement is to enable a mechanism to undertake the routine maintenance of street lighting installations, which, under the Construction (Design and Management) Regulations 2015 (the Regulations), is defined as not being construction work and, as such, does not fall within the requirements of the Regulations. It is anticipated that the majority of Work Orders issued under the Framework Agreement will be for works falling within this definition.

10.2. However, it is possible that there will be Work Orders which will be of such a nature and size that they will be subject to the requirements of the Regulations.

10.3. In this event, it will be the Principal Contactor's (Supplier's) responsibility to inform the Client (s) that the Regulations apply. Accordingly, the Client (s) will appoint a CDM Coordinator specifically for the works covered by the Work Order.

10.4. The items detailed in the following sections which specifically relate to the requirements of the Regulations will only apply to those works which have been identified as coming within the requirements of the Regulations.

10.5. For the purposes of the application of the Construction (Design and Management) Regulations 2015, the following organisations will undertake the stated roles:

The Client (s):	North East Lincolnshire Council Municipal Offices, Town Hall square, Grimsby, North East Lincolnshire DN31 1HU North Lincolnshire Council Church Square House, 30-40 High Street, Scunthorpe, North Lincolnshire, DN15 6NL.
The Designer:	The Client (s) or the Principal Contractor (Supplier)
The CDM Coordinator:	To be advised
The Principal Contractor (Supplier):	The successful Tenderer for the construction and completion of the Whole of the Works comprised in the main contract.
Contractors:	Any other contractor or sub-contractor appointed by the Client (s) or the Principal Contractor (Supplier) to undertake Work comprised in the main contract. Where additional contractors are appointed by the Client (s) these will be notified to the Principal Contractor (Supplier).

11. Social Value and Carbon Reduction - North East Lincolnshire Council

10.1. Social Value

10.1.1. North East Lincolnshire Council's Social Value Policy aims to ensure a 'social return' from its investment by securing social value from:

- doing responsible business and being a good employer
- regeneration, housing and planning activity
- business, economic growth/skills and work activity
- internal providers, mutuals and joint venture partnerships

10.1.2. They look to secure better outcomes through:

- new procedures and processes for acquiring Social Value in construction, goods and services
- ensuring new developments bring public benefits (for example affordable housing/public realm)
- embedding social value throughout the commissioning process

10.1.3. As a guide, the types of suggested outputs the Client will consider to be positive Social Value outcomes are (but not limited to):

- Recruitment of local apprentices from across the diverse communities of the city; proactively reaching out to under-represented groups in your workforce.
- Working with local colleges and educational institutions to support apprenticeship schemes and provide students with apprenticeships and/or work placement opportunities,
- Provide staff with Employer-supported volunteering opportunities.
- Ensure any, and all practises equating to or associated with modern slavery are strictly prohibited.
- Ensure high quality health and safety standards.
- Ensure effective measures are in place to prevent child labour; additionally, procedures are readily in place to help children who are found to be working for them.
- Ensure sound and legal employment terms.
- Ensure fair and equal treatment in the workplace and evidence of working to employment and equality legislation.
- Ensure that their part of the supply chain is subject to continued renewal.
- Ensure responsible and ethical procurement is undertaken within the supply chain.

10.2. Carbon Reduction

10.2.1. The Supplier will be encouraged to implement carbon reducing approaches to meet the North East Lincolnshire Council's Carbon Reduction objectives, of working towards achieving carbon net zero by 2050. Supported by the governments ambition of carbon net zero by 2050, and the recently adopted policy to end the sale of petrol or diesel cars by 2035.

10.2.2. North East Lincolnshire Council's Net Zero Carbon Roadmap explains how the Client will achieve the targets and mitigate the impact of climate change. The Net Zero Carbon Roadmap sets out six workstreams the Client must complete to reach net zero by 2030.

10.2.3. As a guide, the types of suggested outputs that the Client will consider to be positive carbon reducing approaches to meet the both Client's Carbon reduction objectives by:

- delivering, promoting and supporting a sustainable equipment life cycle from design and material selection through to the end-of-life disposal and recycling.
- increase the share of materials reused and recycled and reduce the share of materials sent to landfill and incineration over time, through product/service innovation.
- prevent pollution to air, land and water from hazardous materials and materials with persistent organic pollutants and monitor the types and amount of waste that has been reused, recycled, sent for incineration and landfill during the delivery of the contract term.
- where suitably practical reduce the use of any petrol and diesel vehicles used in its operation over the course of the contract term.

10.2.4. The Client welcomes innovative outputs beyond those suggested in section 10.1.3 and 10.2.3.

11. Social Value and Carbon Reduction - North Lincolnshire Council

11.1.1. **North Lincolnshire Council** recognises that measuring and delivering Social Value requires flexibility and a collaborative approach. Agreed Social Value commitments may require a certain amount of refinement as a result. A key requirement is the willingness of the contracting partner to work openly and transparently with the Client whilst bearing in mind that the overall value of Social Value commitments made must be delivered by the successful Tenderer during the initial term of the contract.

11.1.2. Social Value offers should be appropriate to the local area. For the Client, 'local' is defined as being within the North Lincolnshire Council area, as

detailed in the map in Appendix B Background - NLC. For assurance review the postcode checker to guarantee that your Social Value offer is within the North Lincolnshire area https://www.royalmail.com/find-a-postcode.

11.1.3. Tenderers are free to make a commitment against any measure described within Appendix D – NLC Social Value Guidance document. Tenderers are required to submit a Social Value offer against 5 of the measures detailed in Appendix D against those that Tenderers consider their organisation is best placed to offer given the nature of the contract.

11.1.4. Please refer to the Social Value Guidance Document before completing Social Value method statement contained within ITT Section D, Tender Reply Form 4.

12. Exit Strategy

12.1. The Supplier must provide an Exit Plan for each Client six months prior to the expiry or termination of the Contract term, setting out how the Term Maintenance Services and any Stock will be transferred to a new Supplier

12.2. The Exit Plan should define the following but not be limited to:

- Handover of all related Stock, data, software, manuals and the like
- how the Supplier will ensure all Assets are within safe and working order, as defined within the Scope documentation that forms part of this tender.
- Handover of all and any relevant documentation.
- Transfer of the benefit of any applicable 3rd party warranties and guarantees.
- Provision and Processes for the Transfer of Staff

12.3. On the expiry of the contract term:

- All equipment and or Assets must be in good working order and available for use when transferred to the new Supplier. No additional cost for these activities will be borne by either Client.

13. Modification Of The Contract

13.1. While no further modifications are anticipated at this time, the Client reserves the right to modify the contract at any point within its term, in line with Section 74 of the Procurement Act 2023 in any of the following ways:

Have the ability to terminate the Contract at Year 5,6,7 and or 8

There is a possibility that due to local government reorganisation this contract will need to be novated to another public body carrying out the same functions as the Client's.

Schedule 1 North East Lincolnshire Council KPI's

KPI Ref	KPI Type	Metric	Who	SLA Target
KPI 1	Customer Service	Average time taken to repair a faulty Street Light (for definition see BVI.215a)	Supplier	Within 2 days
KPI 2		% of Emergency Call Outs attended within 2 hours of receiving notification		100%
KPI 3	Serviceability	% of lights working as planned based on an adaptation of the redundant BVPI.98	Supplier	99%
KPI 4	Health and Safety covered under Chapter 8	Category A – Routine Inspections 5% of all live works will be technically inspected by the Client's Service Manager(s) monthly. The Client's Streetworks inspectors will inspect up to 100% of all work.	Supplier	The failure rate shall not exceed 5% of Category A technical inspections carried out monthly throughout the contract
		Category B Routine Inspections 5% of all works will be technically inspected by the Client's Service Manager(s) monthly for compliance with the Specification for Reinstatement of Openings (SROH) The Client's Streetworks inspectors will inspect up to 100% of all work.		The failure rate shall not exceed 5% of Category A technical inspections carried out within the 6 month liability period of the reinstatement.
		Category C Routine Inspections 5% of all works will be technically inspected by the Client's Service Manager(s) monthly for		The failure rate shall not exceed 5% of Category A technical inspections carried out within the 2 year liability period of the reinstatement.

		compliance with the Specification for Reinstatement of Openings (SROH) The Client's Streetworks inspectors will inspect up to 100% of all work.		
		Site Inspection A minimum of 1 live site inspections will be undertaken with the Supplier by the Client's Service Manager's. This may involve unannounced visits.	Client/ Supplier	Pass

Schedule 2 North Lincolnshire Council KPI's

KPI Ref	KPI Type	Metric	Who	SLA Target
KPI 1	Road Work covered under Chapter 8	Category A routine inspections: The Client's Streetworks Inspectors will inspect up to 100% of all Live sites to assess compliance with the relevant Codes of Practice i.e., Safety at Streetworks and SROH	Supplier	The failure rate shall not exceed 5% of Category A inspections carried out monthly throughout the contract
		Category B routine inspections: The Client's Streetworks inspectors will inspect up to 100% of all completed permitted works within the highway to assess compliance with the Specification for Reinstatement of Openings (SROH)		The failure rate shall not exceed 5% of Category inspections carried out within the 6 month liability period of the reinstatement.
		Category C – routine inspections: The Client's Streetworks inspectors will inspect up to 100% of all completed permitted works within the highway to assess compliance with the Specification for Reinstatement of Openings (SROH)		The failure rate shall not exceed 5% of Category A inspections carried out within the 2 year guarantee / liability period of the reinstatement.
		Site Inspection A minimum of 1 live site inspections will be undertaken with the Supplier by the Client's	Client/ Supplier	Pass

		Service Manager's. This may involve unannounced visits.		
KPI 2	Customer Services	No. of complaints from members of the public, elected members and or other stakeholders	Supplier	0
KPI 3	Health and Safety	Annual Health and Safety Inspections - Site Audits up to two per calendar month	Client/ Supplier	Pass
KPI 4	Compliance	Provide calibration certificates for any electrical test instruments Provide calibration certificates for any safety equipment such as CAT scanner, safety harness. Provide copy of LOLER certificates Provide assessment reports from governing body to show electrical	Client/ Supplier	Pass

Invitation to Tender - Appendix A – Background NELC

Framework for the Installation and Maintenance of Road Lighting, Traffic Signs and Bollards for North East and North Lincolnshire Councils

YORtender Reference: 100182 FTS Reference: 2025/S 000-031840

1. BACKGROUND

1.1. North East Lincolnshire

1.1.1. North East Lincolnshire is situated on the east coast of England, south of the Humber estuary where it meets the North Sea, and borders North Lincolnshire to the west and Lincolnshire to the south. North East Lincolnshire includes the port towns of Grimsby and Immingham, and the coastal resort of Cleethorpes, occupies a land area of approximately 192 square kilometres, with a resident population of just under 157,000 people according to the 2021 Census.

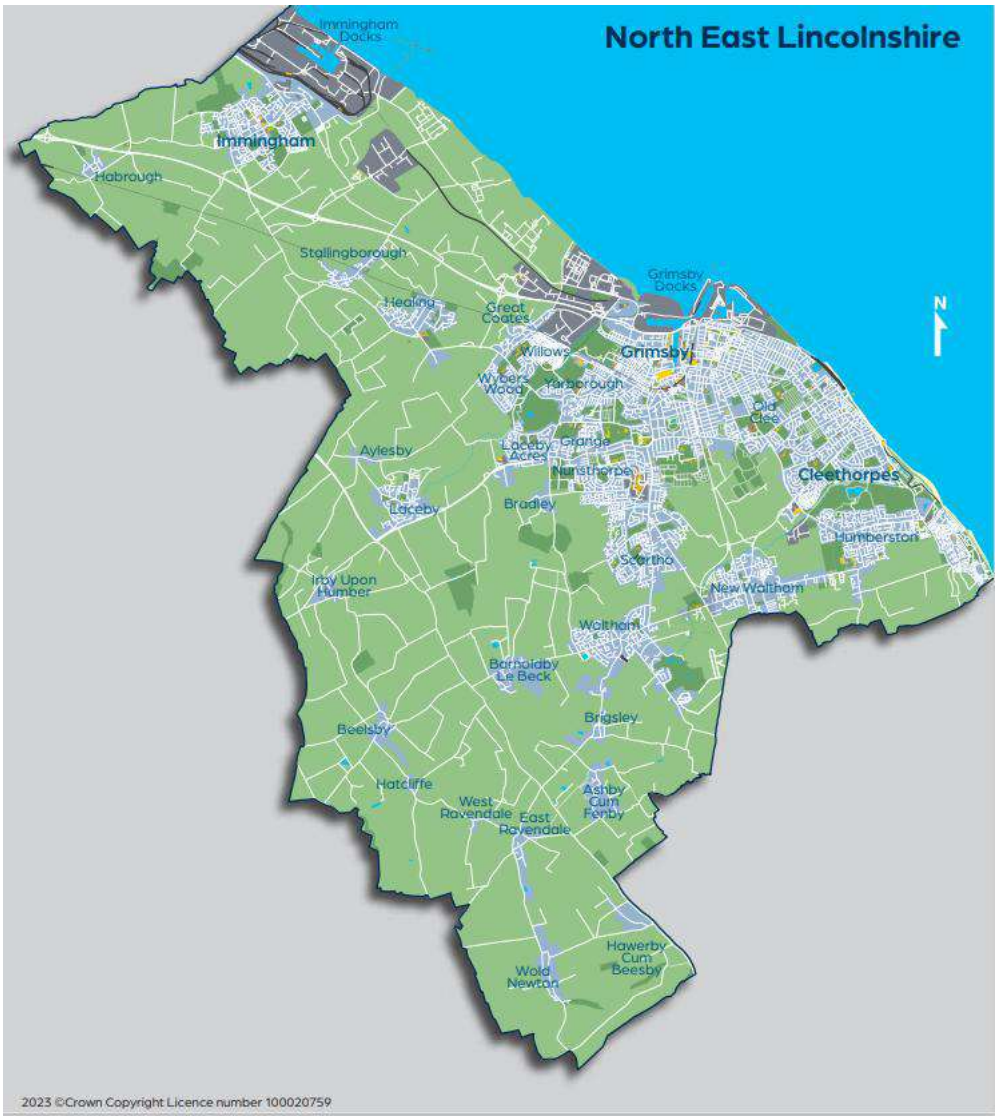

1.1.2. The port of Immingham attracts industrial investment and is the UK's largest port by tonnage. Grimsby has rich heritage and is known as Europe's food town, with the area being home to many food related companies and having one of the largest concentrations of food manufacturing, innovation, storage, and distribution companies in Europe. Tourists are attracted to the seaside resort of Cleethorpes, with visitors coming to enjoy the beach, the coastal nature reserve, or the more traditional resort offers.

1.1.3. North East Lincolnshire has significant economic opportunities since it is uniquely positioned to be at the centre of the growth in offshore wind and green energy industries due to factors such as its existing port infrastructure and its strategic location on the Humber estuary. Many businesses are based in the area including major national and international companies from a wide range of sectors, such as ports and logistics, renewable energy, chemical processing, food processing and manufacturing, health and care, the visitor economy, and services and retail. A wide range of programmes are in place to drive forward business and economic development locally, for instance Grimsby was the first town in the UK to secure a "Town Deal" with the Government.

1.1.4. The area is easily accessed by road being served by a comprehensive road network. A regular railway service operates into both Grimsby and Cleethorpes train stations. Humberside International Airport is only around 15 miles away and this offers frequent flights to other parts of the UK and to European centres.

1.1.5. For further statistics regarding North East Lincolnshire please visit the Authority's data observatory Link to the Data Observatory.

1.1.6. North East Lincolnshire priorities are: 'Stronger economy and stronger communities', in line with the Council Plan .

Invitation to Tender - Appendix B – Background NLC

Framework for the Installation and Maintenance of Road Lighting, Traffic Signs and Bollards for North East and North Lincolnshire Councils

YORtender Reference: 100182 FTS Reference: 2025/S 000-031840

Background

1. About North Lincolnshire

North Lincolnshire is a fantastic place to live and work. Home to just under 170,000 people, our population is set to grow by a further 4,000 over the next 20 years. 37,000 children and young people live in North Lincolnshire, who benefit from highly rated nurseries and schools as well as outstanding support.

The area has 76,000 homes situated across 86 settlements, from the busy urban centre of Scunthorpe to tranquil rural hamlets. There is a diverse range of housing with prices well below the national average.

Residents and visitors can enjoy extensive footpaths, cycleways, open spaces and 66 public gardens and parks. There are a wide range of sport and leisure facilities as well as cultural venues promoting local history and creativity.

Benefitting from fast and easily accessed transport networks, 5,800 businesses have set up in North Lincolnshire. Unemployment is low and 54% of local jobs are highly skilled. The area is also benefitting from Towns Fund investment that has already delivered improved access to gigabit broadband, a new urban park and solar panels for schools.

Life expectancy is improving, and our older population is growing faster than the national average. Over the next 20 years, we expect a 76 per cent rise in the number

of residents aged 85 and over. Our older residents that need support can expect high quality residential and home care provision.

The Council - We are a public body elected to serve the whole of North Lincolnshire. Currently the Council consists of:

- 43 elected members, representing 19 electoral wards across North Lincolnshire.
- Conservatives 27 seats.
- Labour 16 seats.

The role of North Lincolnshire Council is to work with you and our partners to:

- Lead the place of North Lincolnshire.
- Promote prosperity and wellbeing.
- Prevent harm.
- Protect the most vulnerable.

From social care to education, highways to waste collection and planning to trading standards, the work of the Council touches the lives of everybody, every day.

To achieve better outcomes for the people and place of North Lincolnshire we:

- Directly provide hundreds of essential local services.
- Jointly provide services with our partners.
- Buy support from organisations that have the right skills to provide on our behalf.

Strong Partnerships, Better Outcomes

As a leader of place, the council works alongside our partners to ensure we achieve our ambition.

- We work with the local NHS and social care services to promote good health and wellbeing for our residents and reduce health inequalities across North Lincolnshire.
- We collaborate with safeguarding agencies to make sure vulnerable adults and children are protected and feel safe.
- We join forces with parents, teachers and schools to raise educational standards and champion inclusion.
- We work with Humberside Police and probation partners to reduce crime and help people in North Lincolnshire stay safe.
- We work with businesses and housing providers to promote economic and housing growth in our area.
- We partner with local employers and training providers to ensure people have the skills they need to pursue their desired career paths.
- We work alongside the Environment Agency and water companies to manage flood risks and increase resilience to flooding.

Our values and culture

We maximise our impact by staying true to our values:

- Equality of opportunity so everyone can have a good quality of life
- Striving for excellence and high standards
- Using our resources wisely and with integrity
- Promoting self-responsibility and people having choice and control over their own lives.

Our organisational goals are to be:

- Progressive and enabling in our approach
- Financially and environmentally sustainable.

Priorities and Outcomes

North Lincolnshire **Council Plan** outlines our priorities and outcomes and provides a strong framework that guides activity across the Council.

Priority 1 – Keeping people safe and well

Priority 2 – Enabling resilient and flourishing communities

Priority 3 – Enabling economic growth and renewal

Priority 4 – Providing value for money for local taxpayers

Appendix C - Job Request Form
North Lincolnshire Council Highways

North Lincolnshire Council

Contractor:		**From:**	
Address:		**Min Notice Period:**	
Location:		**Completion Due:**	
Unit No's :		**Retro No:**	
Description:		**Order No:**	
Order Date:		**NLC Cost Centre:**	
Speed Limit:		**Traffic Management:**	
Works Required:			

ITEM SCHEDULE	DESCRIPTION OF WORKS.	ASSET ID	QTY	UNIT	RATE	TOTAL
						£0.00

HARD DIG Col No's _____

ABANDON HOLE Col No's _____

ELEC INFO _____

_____

_____

_____

Social Value Guidance Document

Appendix D

Introduction

North Lincolnshire Council (The Authority) is committed to a performance and evidence-based approach to Social Value. This approach enables meaningful direct action to be steered both by local need and by the overarching strategic aims of the council, for example, responsible organisations should consider demonstrating commitment in the following areas: implementing a fostering friendly scheme, being disability confident employers, corporate parenting to support looked after children, supporting volunteering, providing educational visits, offering work experience, employment opportunities and apprenticeships.

Within this tender process Tenderers are required to propose credible targets against our Themes, Outcomes and Measures (TOMs, Table 1), which reflects the council's plan vision and social value charter's priorities. None of the Social Value measures are mandatory and the proposal must be proportional to the overall contract value. This document outlines the Guidance and Evidence Requirements for all measures considered by the council.

Social Value offers should be made available to the local area. For the Authority, 'local' is defined as being within the North Lincolnshire Council area, as detailed in the map (ITT Section A, Section 1 Background). For assurance review the postcode checker to guarantee that your Social Value offer is within the North Lincolnshire area find local Council

Please review Table 1 below which outlines the Council's Themes, Outcomes and Measures examples which may contribute to those outcomes. Please choose 5 **outcomes** and identify the appropriate **measures** that your organisation is best placed to offer given the nature and value of the contract. Tenderers are not required to submit a Social Value offer against each **outcome,** only the first 5 of your submission will be evaluated. Please refer to ITT Section A for further instructions.

These **measures** are included in the tender since the Authority will request the successful Tenderer to submit social value delivery progress and reporting during the contract term.

The Authority recognises that measuring and delivering Social Value requires flexibility and a collaborative approach. As a result, agreed Social Value commitments may require a certain amount of refinement. A key requirement is the willingness of the contracting partner to work openly and transparently with the Authority, whilst bearing in mind that the overall value of Social Value commitments made must be delivered by the successful Tenderer during the initial term of the contract.

Tenderers are to make sure that they follow the guidance set out in this document including several Dos and Don'ts that apply to Social Value qualitative offers.

The Dos and Don’ts of how to submit a good Social Value offer.

Do report on Social Value activities/offers that will be delivered as a result of this contract.

Do ensure that Social Value targets are relevant and proportionate to this contract and are not based on any other projects, initiatives, or wider Corporate Social Responsibility.

Do ensure that you deliver locally. The definition of ‘Local’ has been set up as being within the Authority boundary. For assurance review the postcode checker to guarantee that your Social Value offer is within the North Lincolnshire area find local Council

Do ensure that you only include committed local spend in your supply chain. In committing to spending locally, you must only include spending that will result from being awarded this contract and can be influenced by the supply chains own spending decisions.

Do provide good descriptions and any relevant evidence of how you will deliver your Social Value offers. When making your Social Value offers you should include a description of how you intend to deliver this and any relevant evidence to support your target.

Do enter your Social Value offer for the initial term of the contract only i.e., not including any potential extension periods.

Do not double count. Delivery can only be evidenced through one measure.

Do not overclaim. Only report what is proportional and only capture your own contributions to a measure.

Do not include core requirements of the contract or “Business as Usual” as these cannot be counted as Social Value.

Do not over commit on your Social Value submission as the Authority will contractualise your commitments.

Table 1 Select 5 Outcomes and identify appropriate measures to support the outcomes

Themes	Outcomes	Measures
Enable all residents to benefit from growth and realise their full potential.	Young people and adults achieve their full potential, and their wellbeing is enhanced.	Improving skills and enhancing employment pathways.
	Health and wellbeing of residents is enhanced.	Enabling health and wellbeing improvement.
Create strong, proud, independent, cohesive and resilient communities.	Individuals and communities are stronger, more independent, cohesive and resilient.	Increasing the number of community groups, community engagement, participation and volunteering.
	Businesses have a more skilled workforce.	Increasing access to training opportunities.
	Pay and wider inequalities are reduced.	Addressing pay and other inequalities.
Make North Lincolnshire healthier, greener, cleaner and more sustainable.	A greener, cleaner, and more sustainable area.	Reducing waste and carbon emissions.
		Providing innovative measures to safeguard the environment and respond to the climate emergencies.
	Easier, safer, and sustainable transport.	Supporting North Lincolnshire Council environmental responsibilities.
Enhance the independence and wellbeing of vulnerable people.	Vulnerable people achieve their full potential, and their health, wellbeing and independence are enhanced.	Improving opportunities for vulnerable people.
	Carers are supported and their wellbeing and capacity for caring are enhanced.	Supporting carers.
	Care leavers are supported, and their wellbeing is enhanced.	Supporting care leavers.

Invitation to Tender

Section B – Scope Part B NELC

Framework for the Installation and Maintenance of Road Lighting, Traffic Signs and Bollards for North East and North Lincolnshire Councils

YORtender Reference: 100182

FTS Reference: 2025/S 000-031840

SCOPE and SCOPE APPENDICES

Preamble

1. Tenderers should read this document in conjunction with the following documents listed below:

   ITT Section B - Part A Scope
   Appendix A – Background – NELC

2. The Scope referred to in the tender shall be the 'Specification for Highway Works', published by The Stationary Office (Formerly H.M.S.O) as Volume 1 of the Manual of Contract Documents for Highway Works and published as follows:

Specification for Highway Works
Schedule of Pages and Relevant Publication Dates

Series/Appendix	Page Number	Publication Date
000	1	
000	2 to 3F	
100	2	
100	W1F	
100	12 to 14, 20F	
100	1, 3 to 7, N1, N3	
100	8 to 9, 11, 15, to 19, N2, N4	
100	10, N5 to N6F	
200	1, 3F	
200	2	

300	1	
300	4	
300	2 to 3, 5 to 6F	
400	1 to 6, 8, 10, to 13F	
400	7, 9	
500	20, 23 to 24, 26	
500	28F	
500	1, 13, 16 to 19, 21	
500	3, 12, 22, N1F	
500	2, 4 to 5, 15, 27	
500	6 to 11, 25	
500	14	
600	33	
Series/Appendix	**Page Number**	**Publication Date**
600	2, 27 to 32, 34 to 36, N1	
600	1, 5 to 26, S1, S3F	
600	42 to 49, 52 to 68F, S2, N2 to N4F	
600	37 to 41, 50	
700	2 to 3, 5 to 6, 8 to 9, 11, N1, N3 to N5F	
700	1, 10, 12 to 15, 17 to 25, 27 to 34F	
700	4, 16, 26, N2	
700	7	
800	7	
800	4 to 6, 8	
800	2, 9 to 11	
800	1, 3, 12 to 27F	
900	2 to 5, 9 to 22, 24 to 26, 28 to 67F	
900	1, 6 to 8, S1F	
900	23, 27	
1000	3, 5 to 6	
1000	1 to 2, 4, 7 to 15, 19 to 33F	

1000	16 to 18	
1100	1, 4F	
1100	2, N1F	
1100	3	
1200	1, 14 to 16F	
1200	2 to 3, W1F	
1200	4, 9 to 11, 13	
1200	12	
1200	6 to 7, N1 to N4F	
1200	8	
1300	2, 11, N1	
1300	1, 5 to 10, 12F	
1300	3, 4	
1300	N2F	
1400	1, 3 to 9F	
Series/Appendix	**Page Number**	**Publication Date**
1400	2, N1F	
1500	2	
1500	3, 4, 8 to 11, 13	
1500	1, 5, 6, 12, 14, to 16, 17F	
1500	7	
1600	1, 4 to 5, 9, 15, 17 to 18, 24 to 26, 29 to 31, 35, 38, 49F	
1600	2, 6 to 8, 10 to 14, 16, 19, 27 to 28, 32 to 34, 36 to 37, 39 to 42, 44 to 48	
1600	3, 20 to 23, 43	
1700	2 to 7, 10 to 15	
1700	8 to 9	
1700	1, 16 to 21, 22F	
1800	1, 4, 6, 8 to 9	
1800	2 to 3, 5, 7, 10 to 12F	
1900	1, 5, 8 to 14, 16, 18 to 30F, S1 to S2F	
1900	17	
1900	6 to 7, 15	
1900	2 to 4	

2000	1, 3 to 4F	
2000	2	
2100	1, 4F	
2100	2	
2100	3	
2300	1	
2300	2 to 3F	
2400	2	
2400	1, 4, 7F	
2400	3, 5 to 6	
2500	1	
2500	2, 8, 11F	
2500	6 to 7, 9	
2500	10	
Series/Appendix	**Page Number**	**Publication Date**
2500	3, 4	
2500	5	
2600	1	
2600	2 to 4	
2600	5	
2600	6	
2600	7F	
3000	1, 4 to 7, 10, 12 to 17, 19, 22 to 27F	
3000	20	
3000	2, 3	
3000	8 to 9, 11, 18, 21	
5000	1, 4 to 19F, S1F	
5000	2, 3	
Appendix A	1 to 32F	
Appendix B	1	
Appendix B	2 to 7F	
Appendix C	1	

Appendix C	2F	
#Appendix D	1F	
Appendix D	(NI) N1F	
#Appendix E	1F	
Appendix E (NI)	N1F	
Appendix F	1 to 55F	
Appendix G	1F	
Appendix H	1	
Appendix H	2, 6 to 8F	
Appendix H	3 to 5	

APPENDIX 0/0 – PREAMBLE TO THE SPECIFICATION FOR HIGHWAY WORKS

The Specification for Highway Works shall be further modified and extended by:-

i. For the purpose of this document Supplier will be defined as Contractor and Client's Service Manager(s) will be defined as Engineer.

ii. Appendix 0/1: Contract-specific Additional, Substitute and Cancelled Clauses and Tables;

iii. Appendix 0/2: Contract-specific minor alterations to existing Clauses and Tables

iv. The Numbered Appendices listed in Appendix 0/3;;

v. Appendix 0/5: Special national alterations of the Overseeing Department of Scotland, Wales or Northern Ireland.

3. The relevant publication date of each page of the Specification for Highway Works is given in the Schedule of Pages for Relevant Publication Dates.

4. An Additional Clause, as indicated by a suffix 'A' in Appendix 0/5 is an alteration originating from the Overseeing Department of Scotland, Wales or Northern Ireland. An Additional Clause as indicated by the suffix 'AR' in Appendix 0/1 is a Contract-specific alteration.

5. A Substitute Clause, as indicated by suffix 'S' in Appendix 0.5 is an alteration originating from the Overseeing Department of Scotland, Wales or Northern Ireland. A Substitute Clause as indicated by the suffix 'SR' in Appendix 0/1 is a Contract-specific alteration.

6. A Cancelled Clause, as indicated by suffix 'C' in Appendix 0.5 is an alteration originating from the Overseeing Department of Scotland, Wales or Northern Ireland. A Cancelled Clause as indicated by the suffix 'CR' in Appendix 0/1 is a Contract-specific alteration.

7. Insofar as any of the Numbered Appendices may conflict or be inconsistent with any provision of the Specification for Highway Works the Numbered Appendices shall always prevail. Additionally, Numbered Appendices 0/1 and 0/2 shall take precedence over Numbered Appendix 0/5.

8. Any reference in the Contract to a Clause number or Appendix shall be deemed to refer to the corresponding Substitute Clause number or Appendix listed in Appendix 0/1, 0/2 or 0.5.

9. Where a Clause is altered any original Table referred to in the Clause shall apply unless the Table is also altered. Where a Table is altered any reference in a Clause to the original Table shall apply to the altered Table.

10. Where a Clause in the Specification for Highway Works relates to work goods or materials which are not required for the Works it shall be deemed not to apply.

11. Any Appendix referred to in the Specification for Highway Works which is not used shall be deemed not to apply.

12. Where a Clause in the Specification for Highway Works is prefixed by an # this indicates that this particular Clause has a substitute National Alteration for one or more of the Overseeing Organisations of Scotland, Wales or Northern Ireland. Substitute or additional National Clauses shall be used within countries to which they specifically apply, and they are deemed to replace corresponding Clauses in the main text of the Specification for

Highway Works as appropriate. The substitute National Clauses are located at the end of the relevant Series together with the additional National Clauses of the Overseeing Organisations.

13. Other than where references to the Overseeing Organisation are made in the context of the Overseeing Organisation granting statutory or type approvals, the roles and functions of the Overseeing Organisation shall be undertaken by the Engineer.

Where the Specification for Highway Works requires the provision of documentation to the Overseeing Organisation for statutory or type approval such documentation shall be provided to the Client.

13. If the Specification for Highway Works is used in conjunction with a Contract under which the Contractor is responsible for the design of any part of the Permanent Works, the delegation of the roles and functions of the Overseeing Organisation as stated in paragraph 12 above shall be further amended as follows:

(i) If any agreement, consent or approval required to be obtained from the Overseeing Organisation impacts on the health and safety of the general public, the environment or any property or equipment not owned or operated by the Contractor, such agreement, consent, approval shall be obtained from the Client.

(ii) Where the Specification for Highway Works provides for the Overseeing Organisation to require a test, waive the requirement for a test or alter testing frequency, the party to whom the Overseeing Organisation's roles and functions have been ascribed by paragraph
12 above shall exercise such decisions in accordance with the Secretary of State's requirements stated in the Contract.

APPENDIX 0/1: CONTRACT-SPECIFIC ADDITIONAL, SUBSTITUTE AND CANCELLED CLAUSES, TABLES AND FIGURES INCLUDED IN THE CONTRACT

1. List of Additional Clauses, Tables and Figures:

Clause No.(Etc)	Title	Written on Page No. Following
SERIES 1200	**TRAFFIC SIGNS**	
1200AR	ROUTINE MAINTENANCE OF TRAFFIC SIGNS	
SERIES 1300	**ROAD LIGHTING COLUMNS AND BRACKETS AND CCTV MASTS**	
1300AR	ROUTINE MAINTENANCE OF ROAD LIGHTING COLUMNS AND BRACKETS AND CCTV MASTS	
SERIES 1400	**ELECTRICAL WORK FOR ROAD LIGHTING AND TRAFFIC SIGNS**	
1400AR	ROUTINE ELECTRICAL MAINTENANCE, INSPECTION, CLEANING AND TESTING	
SERIES 2700	**MAINTENANCE**	
2701AR	CONTRACTORS MANNED OFFICE/DEPOTS	
2702AR	STANDBY ARRANGEMENTS	
2703AR	COMPUTER EQUIPMENT	
2704AR	SERVICE LEVEL AGREEMENT AND KEY PERFORMANCE INDICATORS	
2705AR	PROVISION OF LIGHTING AND/OR CABLING DESIGN SERVICES	
2706AR	NUMBERING OF ROAD LIGHTING UNITS, LIT TRAFFIC SIGNS, BOLLARDS AND FEEDER PILLARS	
2707AR	NIGHT PATROL INSPECTION SYSTEM	
2708AR	NOT USED	
2709AR	EQUIPMENT GUARANTEE	
2710AR	NOTIFICATION OF UNIT FAILURES BY CUSTOMER REPORTS	
2711AR	INSTRUCTING WORK ON THE BASIS OF THE NIGHT PATROL INSPECTION REPORT AND CUSTOMER REPORTS	
2712AR	DAMAGE TO THE HIGHWAY AND ADJACENT PROPERTY	
2713AR	CONTRACTOR'S MANAGEMENT CONTROL	
2714AR	AVERAGE REPAIR TIMES REPORTING	

Contract Specific Additional, Substitute and cancelled clauses, tables and figures included in the Contract

2715AR	SHARING OF CONSEQUENCES	
2716AR	INSTALLATION / REMOVAL OF BANNERS	
2717AR	INSTALL WEATHERPROOF PLUG / SOCKET ARRANGEMENT FOR ANCILLARY EQUIPMENT	
2718AR	COMMUNICATION SYSTEM FOR THE CONTRACTOR AND EMERGENCY	
2719AR	**NOT USED**	
2720AR	VERTICAL REALIGNMENT OF TRAFFIC SIGNS	
2721AR	INSTALLATION OF TRAFFIC SIGN POST	
2722AR	INSTALLATION OF TRAFFIC SIGN PLATE	
2723AR	VERTICAL REALIGNMENT OF ROAD LIGHTING UNITS	
2724AR	INSTALLATION OF LIGHTING COLUMN AND BRACKET	
2725AR	INSTALLATION OF LUMINAIRE, ASSOCIATED ELECTRIC EQUIPMENT AND WIRING	
2726AR	INSTALLATION OF PHOTO ELECTRIC CELL UNIT	
2727AR	CONVERSION TO PHOTO ELECTRIC CELL CONTROL TO EXISTING UNIT	
2728AR	CONVERSION OF LUMINAIRE ON EXISTING UNIT	
2729AR	INSTALLATION OF METAL SLEEVE TO EXISTING UNIT	
2730AR	UNDERGROUND CABLE REPAIRS	
2731AR	PROVING ELECTRICAL INTEGRITY OF INTERNAL WIRING AND ASSOCIATED ELECTRICAL EQUIPMENT OF ROAD LIGHTING, LIT SIGN UNIT AND FEEDER PILLAR	
2732AR	PROVING ELECTRICAL INTEGRITY OF UNDERGROUND CABLE NETWORKS	
2733AR	DOUBLE POLE ISOLATION	
2734AR	SEASONAL ILLUMINATIONS	
2735AR	ROUTINE MAINTENANCE OF LIT TRAFFIC SIGNS, BOLLARDS AND BEACONS	
2736AR	UNSCHEDULED MAINTENANCE LIT TRAFFIC SIGN, BOLLARDS AND BEACONS	
2737AR	UNSCHEDULED MAINTENANCE OF ROAD LIGHTING UNIT	
2738AR	UNSCHEDULED MAINTENANCE OF FEEDER PILLAR	
2739AR	INSTALL COMPONENT ON ROAD LIGHTING UNIT, FEEDER PILLAR, LIT TRAFFIC SIGN, BOLLARDS AND BEACONS	

Contract Specific Additional, Substitute and cancelled clauses, tables and figures included in the Contract

2. List of Substitute Clauses, Tables and Figures:

Clause No. (Etc)	Title	Written on Page No. Following
None	None.	

List of Cancelled Clauses, Tables and Figures:

Clause No. (Etc)	Title	Written on Page No. Following
None	None.	

Contract Specific Additional, Substitute and cancelled clauses, tables and figures included in the Contract

Additional Clauses, Tables and Figures:	
Clause No.	**Title and Written Text**
1200AR	**ROUTINE MAINTENANCE OF TRAFFIC SIGNS** 1. The routine maintenance, cleaning, electrical inspection and testing of Traffic Signs is separately specified in Series 2700, but any work carried out under Series 2700 shall also conform to the appropriate requirements of this Series 1200.
1300AR	**ROUTINE MAINTENANCE OF ROAD LIGHTING COLUMNS AND BRACKETS AND CCTV MASTS** 1. The routine maintenance, cleaning and electrical inspection and testing of Road Lighting Columns and brackets and CCTV masts is specified in Series 2700, but any work carried out under Series 2700 shall also conform to the appropriate requirements of this Series 1300.
1400AR	**ROUTINE ELECTRICAL MAINTENANCE, INSPECTION, CLEANING AND TESTING** 1. The routine maintenance, inspection, cleaning and testing of electrical equipment for Road Lighting and Traffic Signs is specified in Series 2700 but any work carried out under Series 2700 shall also conform to the appropriate requirements of this Series 1400.

Contract Specific Additional, Substitute and cancelled clauses, tables and figures included in the Contract

Clauses, Tables and Figures:	
Clause No.	**Title and Written Text**
2701AR	**CONTRACTORS OFFICE/DEPOTS** 1. The Contractor shall for the duration of the Contract, be required to provide at their expense a suitable operational Depot within the borough of North East Lincolnshire as outlined in **Appendix A** prior to the Contract Commencement Date. 2. The Depot shall consist of Office and Depot accommodation and must be suitable in every respect for the satisfactory delivery of the Contract. The following services must be provided: 2.1. Mains electricity supply 2.2. Mains water supply 2.3. Flush toilet 2.4. Washing facilities with constant hot water supply 2.5. Telephone (British Telecommunications or Virgin Media) 2.6. Facsimile 2.7. Access to internet web browser 2.8. Parking Facilities various Contractor's vehicles and or Visitors. 3. The Depot shall be of sufficient size to provide secure Office accommodation for Contractor office equipment, filing records systems, welfare facilities and storage for the Contractor's employees. A maximum of two workspaces for the Engineer is to be included and will be utilised as and when required. 4. The Depot shall consist of secure sufficient sized internal storage areas that will allow for safe keeping of Client Materials for use by the Contractor. An open but secure storage yard may be provided for the safe keeping of Lighting Columns, Traffic Signs and Bollards, sand/aggregate, large cable drums, etc. 4.1. The following estimated quantities listed below are the minimum requirements to be held at the Contractor's Depot at any one time to support delivery of the Contract: 320 LED Lanterns 150 Columns (various types and heights) 20 Traffic Sign posts 210 Traffic Sign plates (various sizes)

Contract Specific Additional, Substitute and cancelled clauses, tables and figures included in the Contract

Clauses, Tables and Figures:	
Clause No.	**Title and Written Text**
	20 Traffic Bollards including bases 220 fixed illumination pieces and light strings 4.2. Upon termination of the Contract any remaining Client materials stored in the incumbent Contractor Depot become the property of the Client and will be required to be transferred the from the incumbent Contractor's Depot to the new Contractor's proposed depot. The cost of this requirement will be borne by the incumbent Contractor. 5. The Office accommodation shall be continually manned during 08:00 hours until 17: 00 hours Monday to Friday (**Normal Working Hours**). 6. The Contractor shall during **Normal Working Hours,** afford access to their premises to the Client's Service Manger(s) to consult with the Contractor or their employees on matters relating to the delivery and or any records relating to the Contract. 7. The Contractor shall provide a Contracts Manager (s) that will be based at the Depot for the exclusive and full time purpose of the delivery of the Contract. 7.1. The Contract Manager (s) shall: • hold a minimum Higher National Certificate in Electrical Engineering or equivalent • have adequate knowledge of operations to be carried out under the Contract, the methods and techniques involved, the hazards likely to be encountered, the methods of preventing accidents and be, in general, a competent person covering all the categories of The Highway Electrical Registration Scheme (HERS) to NHSS8. 8. The Contractor shall provide an Assistant Contacts Manager (s) who is based at the Depot has the capacity to deputise on behalf of the Contracts Manager (s), when absent, and assist the Contract Manager (s) as and when necessary. The Assistant Contacts Manager (s) will be required to hold the same requirements outlined in Section 7.1. 9. The Contactor shall provide a Supervisor that is based at the Depot to supervise the day to day contract activities of the Contractor's employees, and or sub-contractor. 10. The Contractor shall provide administration staff as and when required to support the delivery of Contractor's obligations under the Contract. These staff can be based from the Depot and or the Contractor's Head Office(s), all overhead costs associated with this requirement are to be included in the Contract Price at tender stage. 11. The Contractor must provide a mobile telephone communication system and

Contract Specific Additional, Substitute and cancelled clauses, tables and figures included in the Contract

Clauses, Tables and Figures:	
Clause No.	**Title and Written Text**
	ruggedized handheld tablets that allows communication between the Contractor's Depot and the Contractor's vehicles. Both systems must be capable of providing satisfactory communication at any point in time across the borough North East Lincolnshire. 11.1. The ruggedized handheld tablets for all gangs shall: • have an operating system that is compatible Windows 10 or above • be fitted with a GPS HD camera that is capable of video calling • have either 3G,4G and or 5G WIFI connection 12. The cost of provision, installation, maintenance, rental licensing, training, and/or network fees will be borne by the Contractor. 13. The Contractor shall provide identity cards for each of their employees and those of their Sub-Contractors engaged upon the works delivered under the Contract. 13.1. The identity card shall include: • the name and address of their employer, • the name of the full name of their employee • their photograph 14. All Contractor's employees and sub-contractors engaged to undertaken works under the Contract shall: • be Competent Persons to NHSS8 • be trained to HESA (G39) certification and before commencing any works under the Contract, • receive instructions in safe working practices and electrical safety as required by the Client's Service Manager (s). • be classified as "Category 1" or "Category 2" on the "Competent Persons Authorisation Certificate" • hold a minimum Level 2 qualification in Electrotechnical Technology (City and Guilds 236 Part 1 Electrical Installation). • wear their identity cards in a prominent position at all times when engaged on the Contract. 15. All Contractor's employees and sub-contractors engaged to undertaken works under the Contract shall before commencing work on the site: • be at all times as clean and presentable as is practically possible. • wear clean approved reflective and fluorescent clothing approved by the Engineer. • where engaged on works within the Public Highway environment suitable and appropriate clothing is to be worn and all clothing clearly marked with the Contractor and or sub-contractors company name.

Contract Specific Additional, Substitute and cancelled clauses, tables and figures included in the Contract

Clauses, Tables and Figures:	
Clause No.	**Title and Written Text**
	• whereby any Works relate to the provisions of S.67 of the New Roads and Street Works Act 1991 suitable and appropriate clothing is to be worn as defined under the Act.

Contract Specific Additional, Substitute and cancelled clauses, tables and figures included in the Contract

Clauses, Tables and Figures:	
Clause No.	**Title and Written Text**
2702AR	**STANDBY ARRANGEMENTS** 1. The Contractor shall put in place such facilities as are necessary to be able to undertake **Emergency Works** within the response times specified in Appendix 1/13 Programme of Works - Emergency Works Table. 2. The Contractor's Depot shall allow for the Engineer or any duly appointed representative to be able to contact the Contractor's employees on a 24 hourly basis, so that the Contractor can meet their obligations under the Contract. 3. All telephone lines for this purpose shall be transferred to another local extension of the Contractor's own nomination, and the line is to be manned by a competent person, 17:00 until 08:00 hours Monday to Friday, 24 hours period that covers Saturday and Sunday, and Bank Holidays (**Outside Normal Working Hours**) in order to receive Emergency reports from the Engineer , members of the public, the Client's Security Department, Police, Emergency Services and or Statutory Undertakers. 4. The Contractor shall put in place an alternative communication system should the system referred to above be out of service or otherwise ineffective for a period of more than 12 hours. 5. **Emergency Works** may include any of the Works specified in Category 1 and Category 2, namely:- **<u>Category 1</u>** i. Lighting unit, lit Traffic Signs, lit Traffic Bollards, Pedestrian refuge and/or Crossing Posts, Feeder Pillars knocked down. ii. Brackets and/or luminaires hanging. iii. Doors off or missing. iv. Multiple lighting unit failures greater than 5 lamps. v. Reports of electrical shock from equipment. vi. Other immediately dangerous incidents. vii. As instructed by the Engineer. **<u>Category 2</u>** i. Bowls hanging.

Contract Specific Additional, Substitute and cancelled clauses, tables and figures included in the Contract

Clauses, Tables and Figures:	
Clause No.	**Title and Written Text**
	ii. Multiple road lighting unit failures less than 5 lamps. iii. Lighting unit, Lit Traffic Signs, Lit Traffic Bollards, Pedestrian refuge and/or Crossing Posts, Feeder Pillars leaning. iv. As instructed by the Engineer. 6. The Contractor shall ensure that there is a sufficient number of Contractor employees and or sub-contractors on stand-by at all times and if notified of an Emergency shall supply without delay such services as are necessary to undertake any **Emergency Works**. All Contractor vehicles shall be provided with communications facilities to ensure that a swift response to any Emergency can be made during **Outside Normal Working Hours** within 2 Hours (**Emergency Call Out Period).** 7. After any Emergency Call Out the Contractor shall complete a copy of the Contractor Callout Form contained in Appendix 12/71 or 13/71, and or their own alternative as approved by the Engineer as appropriate and submit to the Engineer along with photographic evidence via email, within 2 hours of the first attendance on site during **Normal Working Hours** and before 08.30 hours on the following working day **Outside Normal Office Hours.** An instruction will be issued for each Emergency Call Out and this shall cover remedial work where necessary. A permanent repair or replacement shall not be undertaken without instruction from the Engineer. 8. If the Contractor is called out under the stand-by arrangement to attend any damage to a Lighting unit, Lit Traffic Sign, Lit Traffic Bollard, Lit Belisha beacon or Centre Island Refuge beacon which necessitates **Emergency Works**, they shall restore the installation to full operational order or if this is not practicable they shall ensure that the installation is made safe without delay and shall remove all debris, and post warning lamps as necessary. Where a Column or part of a Column is removed leaving exposed the electricity cable and/or cut out, this shall be covered by a substantially constructed temporary enclosure suitably painted and bearing the legend “DANGER ELECTRICITY – LIVE CABLES”. 9. The Contractor shall ensure that where the underground cable is the responsibility of the District Network Operator (DNO), that the DNO representative has accepted responsibility for the site before the Contractor leaves the site. NB: The DNO for North East Lincolnshire is Northern Powergrid. 10. The Contractor employees and vehicle attending the Emergency Call Outs shall have adequate equipment, plant and expertise to effect **Emergency Works** until permanent repairs are carried out. 11. The Contractor will be required to provide the following information to

Contract Specific Additional, Substitute and cancelled clauses, tables and figures included in the Contract

Clauses, Tables and Figures:	
Clause No.	**Title and Written Text**
	support the updating of the Client's Asset register as follows:- • All asset additions and/or changes will be updated on an agreed form by the Contractor and given to the Client within 48 hours of the completed works. • No less than 90% of all additions/changes must be supplied within 48 hours of the site work being undertaken

Contract Specific Additional, Substitute and cancelled clauses, tables and figures included in the Contract

Clauses, Tables and Figures:	
Clause No.	**Title and Written Text**
2703AR	**COMPUTER EQUIPMENT** 1. Symology (the client's Software System) is a Cloud Hosted system which holds the following modules: • Works Management Module • Works Management Contractor Interface • SymPlanner • Mapping User 2. The Client will provide the Contractor with a tablet/ hand held device for the duration of the Contract. 3. The Client will provide the Contractor one initial user license to access the Client's software system. The cost the initial license and Annual Service Charge will be borne by the Client. 4. Should the Contractor require more than one user license during the Contract, the Contractor will have to request in writing to the Engineer the number of additional licenses. The Client will purchase the additional licenses required and recover these costs from the Contractor of the license. Any additional Annual Service Charges in relation to the additional license will be paid for by the Client and recovered from the Contractor . 5. The Contractor will nominate a Contractor Superuser for the Client's Service Software system and the Engineer will provide one full day's training on the system. The Contractor's Superuser will be responsible for training additional employees and or sub-contractors that are required to use the Client's software system. 6. The Contractor will be required to fulfil the following obligations in respect of Client's Software System : • Have suitable ICT hardware to operate the Client's Software System • Have the preferred remote desktop software Citrix Terminal Server and or equivalent in order to access the Client's Software System • Provide daily updates in respect of job progression, condition reports etc. • Submit financial claims for completed works • Maintain and update Street Works Notices • Update the Client's Asset Register and cyclic activities • Provide reports arising from night time inspections etc. • Internet access 7. There will be a requirement for the Contractor to operate mobile data capture devices. Any costs relating to all training shall be included within their tender.
2704AR	**SERVICE LEVEL AGREEMENT AND KEY PERFORMANCE INDICATORS**

Contract Specific Additional, Substitute and cancelled clauses, tables and figures included in the Contract

Clauses, Tables and Figures:	
Clause No.	**Title and Written Text**
	Refer to ITT Section B Scope Section 5 Contract Management and Schedule 1

Contract Specific Additional, Substitute and cancelled clauses, tables and figures included in the Contract

Clauses, Tables and Figures:	
Clause No.	**Title and Written Text**
2705AR	**PROVISION OF LIGHTING AND/OR CABLING DESIGN SERVICES** 1. Any of the Contractor's employees and or sub-contractors who are to be engaged to undertake any design works under the Contract shall, prior to undertaking the design works: • have attended the Lighting Design course modules delivered by the Institution of Lighting Professionals (ILP), and or similar approved design courses. • Be able to demonstrate a minimum of 5 years appropriate lighting and cable design experience • Hold a G39 certification. • meet the requirements detailed in the ILP Competency Requirements for Lighting Design Staff Highway Lighting Design Implementation. 2. The Designer will undertake a site survey. 3. The Designer will obtain and collate Statutory Undertakers plant locations. 4. The Designer will design drawings will show new Column locations, existing Columns to be removed, details and routes of private cable, if required. However, if no cabling is shown this will denote a single phase DNO supply. Drawings will also be produced for all electrical details such as feeder pillars, wiring schematics and termination details. Drawings will also show setting out details. To include: • Position and plan number of Columns • Bracket arm and luminaire orientation. 5. The Designer will provide design and calculations for luminance-based designs for each lighting system in the form of an output report from the design software. Illuminance/luminance levels will be provided in the form of either an output report from an approved design software or by drawing. CAD-based design software should be used to show isolux footprints depending on the complexity of the design area. 6. The Designer will provide details of any attachments to be re-installed will be identified in a schedule. The schedule will identify the attachment and the Column number to which it is to be attached. Cable design calculations shall fully comply with BS 7671 7. Upon completion of the design a Scope Document will be produced by the Designer detailing all equipment required to install the design on site and will include a setting out schedule detailing; • Column setbacks.

Contract Specific Additional, Substitute and cancelled clauses, tables and figures included in the Contract

Clauses, Tables and Figures:	
Clause No.	**Title and Written Text**
	• Mounting height • Bracket Projections • Bracket position • Spigot position • Luminaire angle • Lantern type • Type of optical control • Lamp holder/reflector position. • Maintenance Factor used 8. A Price List will also be produced to allow for accurate pricing by the Contractor. 9. A design risk assessment shall be produced by Designer. 10. Design information to be submitted to Client for approval 11. Respond to all comments from Client and amend submission as required.
2706AR	**NUMBERING OF ROAD LIGHTING UNITS, LIT TRAFFIC SIGNS, BOLLARDS AND FEEDER PILLARS.** 1. The apparatus to be numbered and/or renumbered will be identified by the engineer and a drawing and/or schedule issued to the contractor. The numbering shall fully comply with the requirements of Series 1300 Clause 1304 and Drawing Ref No SL/CD0036. 2. To number or renumber apparatus the Contractor shall:- (i) Clean down the area (as agreed with the Engineer) to which the number is to be applied and/or remove existing number. (ii) Apply number in position as agreed with the Engineer and as per Drawing Ref No SL/CD0036. (iii) Ensure any surplus materials are removed from site and disposed of in the appropriate manner. The Works Order, issued by the Engineer giving details of the number to be applied to each item of equipment, shall be signed by the Contractor indicating the completed work prior to being returned to the Engineer.

Contract Specific Additional, Substitute and cancelled clauses, tables and figures included in the Contract

Additional Clauses, Tables and Figures:	
Clause No.	**Title and Written Text**
2707AR	**NIGHT PATROL INSPECTION ROUTE** 1. The Client shall submit to the Contractor for their acceptance a night patrol inspection route . The night patrol inspection system shall:- (i) be accepted by the Contractor in sufficient time to allow for all of the procedures specified in this Clause to be completed so that the accepted night patrol inspection route shall be operational at contract commencement. (ii) include for the systematic inspection and verification of the existence and condition of every Lighting Unit and enable all Unit Failures to be identified, on specified Traffic Sign Routes supplied by the Engineer (iii) ensure that every Lighting Unit will be inspected and verified at intervals of not less than 18 per year 1 per Summer months 2 per winter months. (iv) be commenced between 30 minutes and 90 minutes after sunset (v) include for the Contractor's vehicle to be fitted with a GPS tracking system and a roof mounted amber flashing beacon. The vehicle shall display prominent 'STREET LIGHTING SCOUTING' stickers in the rear window. (vi) include for all night patrol inspection personnel to wear high visibility jackets or vests. (vii) include any risk assessment and method statements to comply with the requirements of the Contract and any relevant legislation. 2. The Contractor shall commence the night patrol inspection system on Contract commencement and thereafter maintain the night patrol inspection system in accordance with the proposals, or as modified or adjusted under sub-clause 5 of this clause, for the duration of the Contract. 3. From time to time the Engineer may require the Contractor to modify or adjust the accepted night patrol inspection system to take account of any additions or modifications to the Lighting Units. 4. The Contractor shall commence the modified or adjusted night patrol inspection route as soon as practical after the Engineer requirement under clause V above of this clause and provide the Engineer with details of the modifications or adjustments within 14 days of commencing the modified or adjusted night patrol inspection system. 5. All Unit Failures identified on night patrol inspections shall be checked for accuracy by the Contractor and submitted to the Engineer electronically no later than 9.30 a.m. of the day following the commencement of the night patrol inspection. The report shall be clearly printed in block capitals

Contract Specific Additional, Substitute and cancelled clauses, tables and figures included in the Contract

Additional Clauses, Tables and Figures:	
Clause No.	**Title and Written Text**
	on the scouting report form provided by the Engineer. 6. The Contractor shall allow in their rates for this activity an increase in the Client Assets of 0.2% per year throughout the Contract.

Contract Specific Additional, Substitute and cancelled clauses, tables and figures included in the Contract

Additional Clauses, Tables and Figures:	
Clause No.	**Title and Written Text**
2708AR	Not Used
2709AR	**EQUIPMENT GUARANTEE** 1. All lamps and control gear to be incorporated into the Works shall be covered by an Equipment Guarantee of 24 months and in the event of failure during the Defects Correction Period applicable to the Works. 2. All LED road lighting Lanterns and control gear to be incorporated into the Works shall be covered by an Equipment Guarantee of 10 years and in the event of failure during the Defects Correction Period applicable to the Works. 3. In order to facilitate prompt removal and replacement of the failed Lanterns/components, the Contractor shall inform the Engineer as soon as possible after they become aware of such a failure.
2710AR	**NOTIFICATION OF UNIT FAILURES BY CUSTOMER REPORTS** 1. From time to time the Engineer receives reports of defective Street Lights and items of Illuminated Street Furniture from members of the public and other sources. These customer reports will be logged by the Engineer and ordered with the Contractor through the Client's Software System each working day. 2. Work required as a result of these reports to the Engineer will be instructed under Clause 2711.
2711AR	**INSTRUCTING WORK ON THE BASIS OF THE NIGHT PATROL INSPECTION REPORT AND CUSTOMER REPORTS** 1. The Engineer will instruct the Contractor to carry out any work considered necessary as a result of the matters identified in the report submitted in accordance with Clause 2707 AR and those identified in the customer reports referred to in Clause 2710 AR. The instructions will be issued the same day as the report under Clause 2707 AR is received and on the same day as the customer reports are ordered through the Client's Software System to the Contractor. 2. The day of the Engineer instructions under sub- Clause I above of this clause will be the first day of the period specified for completion of each activity stated in Appendix 1/13.

Contract Specific Additional, Substitute and cancelled clauses, tables and figures included in the Contract

Additional Clauses, Tables and Figures:	
Clause No.	**Title and Written Text**
2712AR	**DAMAGE TO THE HIGHWAY AND ADJACENT PROPERTY** 1. The Contractor shall satisfy themselves as to the condition of the public highway, any private accesses, drives, footways, walls, fences and adjacent property before commencing work on a Site and shall report any defects to the Engineer, along with photographs of those defects. 2. The Contractor's attention is drawn to their obligations and responsibilities under the contract.
2713AR	**CONTRACTOR'S MANAGEMENT CONTROL** Refer to ITT Section B Scope Section 5 Contract Management
2714AR	**AVERAGE REPAIR TIMES REPORTING** 1. For the purposes of monitoring their performance and reporting to the Engineer, the Contractor shall follow the procedure below: (i) The Client's Software System specified in Clause 2703 AR will be provided, installed and tested prior to the commencement of the operational works (ii) The time and date of each instruction issued in accordance with Clause 2711 AR will be automatically recorded by the software specified in Clause 2703 AR. (iii) The Contractor shall input into the software the date on which the repair was completed. (iv) The Contractor shall input into the 'Reporting and Grouping' section of the software the first and last day of the appropriate month and run the programme to produce the following information relevant to that month: (a) total number of jobs issued (b) total number of jobs completed (c) average repair time in days (d) total number of jobs outstanding (e) breakdown of jobs issued
2715AR	**SHARING OF CONSEQUENCES**

Contract Specific Additional, Substitute and cancelled clauses, tables and figures included in the Contract

Additional Clauses, Tables and Figures:	
Clause No.	**Title and Written Text**
	1. Where the Contractor has proposed a variation to a Works Order which results in a detriment in terms of costs, time delays and any consequent costs incurred by the Client resulting from the delays, will be at the Contractor sole risk, unless apportioned costs have previously been agreed. 2. Where the Client has proposed a variation to a Works Order which results in a detriment in terms of costs, time delays and any consequent costs incurred by the Contractor resulting from the delays, will be at the Client's sole risk, unless apportioned costs have previously been agreed.

Contract Specific Additional, Substitute and cancelled clauses, tables and figures included in the Contract

Additional Clauses, Tables and Figures:	
Clause No.	**Title and Written Text**
2716AR	**INSTALLATION / REMOVAL OF BANNERS** 1. The Contractor shall at the request of the Engineer collect banners from a designated store and deliver to site. 2. The Contractor shall visually inspect the banner and report any defects to the Engineer. 3. The Contractor shall provide access equipment appropriate to the task. 4. The Contractor shall visually inspect the banner mounting points and report any defects to the Engineer. 5. The Contractor shall install/remove banners using suitable fixtures and fittings. 6. The Contractor shall at the request of the Engineer remove banners from site and return to designated store.
2717AR	**INSTALL WEATHERPROOF PLUG/SOCKET ARRANGEMENT FOR ANCILLARY EQUIPMENT** 1. The Contractor shall at the request of the Engineer install weatherproof plug/socket arrangement at high level to designated road lighting unit. 2. The Contractor shall provide a 200-250v IP rated 'Commando' type plug/socket arrangement suitable for an external environment. 3. The Contractor shall provide access equipment appropriate to the task. 4. The Contractor shall visually inspect the road lighting unit and report any defects to the Engineer. 5. The Contractor shall provide and install a 2 way double pole isolator in the base of the road lighting unit. 6. The Contractor shall securely attach all access doors to the Column before leaving the site. Where it is not possible to lock or repair an existing door a stainless steel band and buckle must be used to prevent unauthorised access. In situations where the door is missing a temporary door must be fitted. Any such repairs shall be reported to the Engineer within 5 working days.
2718AR	**COMMUNICATION SYSTEM FOR THE CONTRACTOR AND EMERGENCY RESPONSE**

Contract Specific Additional, Substitute and cancelled clauses, tables and figures included in the Contract

Additional Clauses, Tables and Figures:	
Clause No.	**Title and Written Text**
	1. The Contractor shall ensure that his offices are manned during **Normal Working Hours** in order to receive reports and instructions from the Engineer. The offices shall be provided with two direct telephone lines for this purpose, (Mobile phones will be acceptable for this purpose), and one of which shall be used only for the receipt of instructions which require a swift response to an Emergency. The Contractor shall ensure that the telephone line for the receipt of instructions which require a swift response has an operator at all times within **Normal Working Hours** and does not rely upon an answer machine or the like. 2. The Contractor shall ensure that their employees, and or authorised agent or representative can be contacted at all times during **Normal Working Hours** by the Engineer. 3. The Contractor shall set up and operate an effective communication system for communication with their employees and sub-contractors engaged on the Works and with their authorised agent or representative. 4. The Contractor shall ensure that the communication systems referred to in sub- clauses 1 to 4 above are in operation on the Contract Commencement Date and are maintained in a serviceable condition throughout the Contract. Should breakdowns or failures occur they shall be rectified within 4 hours of these becoming apparent 5. Emergency Response i. Outside **Normal Working Hours** the Contractor shall ensure that an effective means of providing Emergency attendance is provided to the satisfaction of the Engineer. ii. Outside **Normal Working Hours** the Contractor shall respond to any request for Emergency assistance from the Police, Fire Services or other persons authorised by the Engineer. iii. The Contractor shall arrive at the site of the Emergency within the **Emergency Call Out Period** for very urgent safety hazards and within 24 hours for other emergencies. 6. Night Patrol Inspection Route The Contractor to ensure a lone working and communications system is in place during night time patrol inspections. Lone Working Risk Assessment to be supplied to the Engineer.

Contract Specific Additional, Substitute and cancelled clauses, tables and figures included in the Contract

Additional Clauses, Tables and Figures:	
Clause No.	**Title and Written Text**
2719AR	**NOT USED**
2720AR	**VERTICAL REALIGNMENT TRAFFIC SIGNS** 1. After supporting the post, the Contractor shall carefully excavate by hand in any material, round the lighting unit to below the cable entry, to the existing concrete foundation. Care must be taken during the excavation not to damage the electricity supply cable or any other services that may be present. Should any damage be caused to any of the cables or services during the works then the Contractor will contact the relevant utility company to arrange for repair and advise the Client of their actions. 2. After vertical realignment the hole shall be backfilled and compacted ensuring that any void between the existing concrete foundation and the surrounding ground has been filled and compacted. 3. The Contractor shall be responsible for making good any damage to the post or its protective system caused during the operation. 4. The Works Order, issued by the Engineer giving details of each vertical realignment, shall be signed by the Contractor indicating the completed work prior to being returned to the Engineer. The completed forms shall be returned by the Contractor to the Engineer at daily intervals on completion of the work.
2721AR	**INSTALLATION OF TRAFFIC SIGN POST** 1. The installation of Traffic Sign post shall fully comply with the requirements of this Series, the appropriate Clause of Series 1200 but shall not include for the supply of the Traffic Sign post and any electrical works. 2. The Works Order, issued by the Engineer giving details of each Traffic Sign post installed, shall be signed by the Contractor indicating the completed work prior to being returned to the Engineer. The complete forms shall be returned by the Contractor to the Engineer at daily intervals not more than one week after the completion time stated in Appendix 1/13.
2722AR	**INSTALLATION OF TRAFFIC SIGN PLATE** 1. The installation of Traffic Sign plate shall fully comply with the requirements for this series, the appropriate Clause of Series 1200 but shall not include for the supply of the sign plate, sign post and any electrical work.

Contract Specific Additional, Substitute and cancelled clauses, tables and figures included in the Contract

Additional Clauses, Tables and Figures:	
Clause No.	**Title and Written Text**
2723AR	**VERTICAL REALIGNMENT LIGHTING COLUMNS** 5. After supporting the Column, the Contractor shall carefully excavate by hand in any material, round the lighting unit to below the cable entry, to the existing concrete foundation. Care must be taken during the excavation not to damage the electricity supply cable or any other services that may be present. Should any damage be caused to any of the cables or services during the works then the Contractor will contact the relevant utility company to arrange for repair and advise the Client of their actions. 6. After vertical realignment the hole shall be backfilled and compacted ensuring that any void between the existing concrete foundation and the surrounding ground has been filled and compacted. 7. The Contractor shall be responsible for making good any damage to the Column or its protective system caused during the operation. 8. The Works Order, issued by the Engineer giving details of each vertical realignment, shall be signed by the Contractor indicating the completed work prior to being return to the Engineer. The completed forms shall be returned by the Contractor to the Engineer at daily intervals on completion of the work.
2724AR	**INSTALLATION OF LIGHTING COLUMN AND BRACKET** 1. The installation of lighting Column and bracket shall fully comply with the requirements of this Series and the appropriate Clauses of Series 1300, but shall not include for the lighting Column, bracket arm and any electrical work. 2. The Works Order, issued by the Engineer giving details of each lighting Column and bracket installed, shall be signed by the Contractor indicating the completed work prior to being returned to the Engineer. The completed forms shall be returned by the Contractor to the Engineer at daily intervals on completion of the work.
2725AR	**INSTALLATION OF LUMINAIRE, ASSOCIATED ELECTRICAL EQUIPMENT AND WIRING**

Contract Specific Additional, Substitute and cancelled clauses, tables and figures included in the Contract

Additional Clauses, Tables and Figures:	
Clause No.	**Title and Written Text**
	1. The installation of luminaire and associated electrical equipment only shall fully comply with the requirements of this Series and the appropriate clauses of Series 1200, 1300 & 1400 but shall not include for the luminaire, photo cell, Column, bracket and foundation. 2. The Contractor shall carefully remove to store any items of equipment instructed by the Engineer. 3. The Contractor shall ensure that the access doors to the Column are securely attached before leaving the site. Where it is not possible to lock or repair an existing door a stainless steel band and buckle must be used to prevent unauthorised access. In situations where the door is missing a temporary door must be fitted. Any such repairs shall be reported to the Engineer within 5 working days. 4. The Works Order, issued by the Engineer giving details of each luminaire and associated electrical equipment installed, shall be signed by the Contractor indicating the completed work prior to being returned to the Engineer. The completed forms shall be returned by the Contractor to the Engineer at daily intervals on completion of the works.

Contract Specific Additional, Substitute and cancelled clauses, tables and figures included in the Contract

Additional Clauses, Tables and Figures:	
Clause No.	**Title and Written Text**
2726AR	**INSTALLATION OF PHOTO ELECTRIC CELL UNIT/CMS Node** 1. The installation of photo electric cell unit shall fully comply with the requirements of this Series and Series 1400 and amendments as specified in the Contract but shall not include for the photo cell.
2727AR	**CONVERSION TO CMS FROM PHOTO ELECTRIC CELL CONTROL** 1. The luminaires to be converted will be identified by the Engineer and a drawing and/or schedule issued to the Contractor. The conversion to photo electric cell shall fully comply with the requirements of this series and series 1400 and amendments as specified in the contract but shall not include for the photo electric cell. 2. To convert an existing lighting unit to CMS from photo electric cell control the Contractor shall:- i. Isolate the supply and disconnect the luminaire feed ii. Remove the redundant Photo Cell iii. Drill the luminaire canopy (in a position agreed with the Engineer) to receive the CMS Node. iv. Make the necessary electrical connections to the control gear and CMS Node. v. Securely attach all access doors to the Column before leaving the site. Where it is not possible to lock or repair an existing door a stainless steel band and buckle must be used to prevent unauthorised access. In situations where the door is missing a temporary door must be fitted. Any such repairs shall be reported to the Engineer within 5 working days. 3. The Works Order, issued by the Engineer giving details of each photo electric cell installed, shall be signed by the Contractor indicating the completed work prior to being returned to the Engineer. The completed forms shall be returned by the Contractor to the Engineer at daily intervals on completion of the works.
2728AR	**CONVERSION OF LANTERN ON EXISTING UNITS** 1. The conversion of Lantern on existing unit shall fully comply with the requirements of this series and the appropriate Clause of Series 1200, 1300 and 1400 but shall not include the supply of the luminaire. 2. The Contractor shall carefully remove the existing Lantern, remote control gear (if any) and cabling.

Contract Specific Additional, Substitute and cancelled clauses, tables and figures included in the Contract

Additional Clauses, Tables and Figures:	
Clause No.	**Title and Written Text**
	3. The new luminaire shall be installed in accordance with the manufacturer's instructions, ensuring that the fixing bolts are all mechanically tight and the agreed vertical, horizontal alignments and optical systems are correctly orientated and adjusted towards the road.

Contract Specific Additional, Substitute and cancelled clauses, tables and figures included in the Contract

Additional Clauses, Tables and Figures:	
Clause No.	**Title and Written Text**
2729AR	**NOT USED**
2730AR	**UNDERGROUND CABLE REPAIRS** 1. The Contractor shall on the instruction of the Engineer undertake repairs to privately owned underground cables. 2. The Contractor shall supply all specialist equipment and expertise to identify a cable fault and its location prior to excavation on site. If the Contractor is unable to satisfy themselves as to the exact location of the fault or can find no evidence of damage at the first excavation he shall immediately notify the Engineer who may then specify the method and extent of the repair to be carried out. 3. The Contractor shall not make any attempt to “burn down” the fault by enlarging any circuit protection devices other than under the direction of the Engineer. 4. The Contractor shall notify the Engineer of the location and nature of the fault and shall limit their repair to the replacement of damaged or faulty cut outs and a repair with a single joint or replacing a 5 metre (maximum) length of damaged or faulty cable (two joints required). No more extensive repair shall be undertaken without the prior agreement of the Engineer. Once the location of the fault has been agreed, the Contractor shall excavate in any material to expose the cable, taking care not to damage the cable or other services that may be present. 5. Joints shall be in accordance with the Electricity at Work Regulations 18th Edition, and any other updated Editions that supersede the current edition. 6. All replacement cables shall be of the same type, configuration and capacity as the damaged cable unless agreed in writing by the Engineer prior to installation. Preference shall be given to the use of XLPE/SWA/PVC cables in accordance with the Electricity at Work Regulations 18th Edition, and any other updated Editions that supersede the current edition. 7. The Contractor shall ensure that the access doors to the feeder pillars are securely attached before leaving the site. Where it is not possible to lock or repair an existing door a stainless steel band and buckle must be used to prevent unauthorised access. In situations where the door is missing a temporary door must be fitted. Any such repairs shall be reported to the Engineer within 5 working days. 8. The Contractor shall submit to the Engineer within 5 working days of the underground cable repair a report detailing the works carried out together with a 1:1250 scale site location plan identifying the repair.

Contract Specific Additional, Substitute and cancelled clauses, tables and figures included in the Contract

Additional Clauses, Tables and Figures:	
Clause No.	**Title and Written Text**

Contract Specific Additional, Substitute and cancelled clauses, tables and figures included in the Contract

Additional Clauses, Tables and Figures:	
Clause No.	**Title and Written Text**
2731AR	**PROVING ELECTRICAL INTEGRITY OF INTERNAL WIRING AND ASSOCIATED ELECTRICAL EQUIPMENT OF ROAD LIGHTING, LIT SIGN UNIT AND FEEDER PILLAR IN ACCORDANCE WITH BS 7671** 1. The Contractor will be instructed by the Engineer as and when to carry out the proving electrical integrity to a Road Lighting, lit sign unit and feeder pillar. 2. The Contractor shall undertake the proving of electrical integrity of internal wiring of individual feeder pillars to coincide with the routine maintenance programme. 3. Inspection and proving of the installation shall be carried out in accordance with the Electricity at Work Regulations 18th Edition, and any other updated Editions that supersede the current edition and the following:- i. For lighting and sign units (b), (d), (f), (g), (h) apply 4. The Contractor shall ensure that the access doors to any Columns are securely attached before leaving the site. Where it is not possible to lock or repair an existing door a stainless steel band and buckle must be used to prevent unauthorised access. In a situation where the door is missing a temporary door must be fitted. Any such repairs shall be reported to the Engineer within 5 working days. 5. The Works Order, issued by the Engineer giving details of each Road Lighting, lit sign unit and feeder pillar to be tested, shall be signed by the Contractor indication the completed work prior to being returned to the Engineer. The completed forms shall be returned by the Contractor to the Engineer at daily intervals on completion of the works.
2732AR	**PROVING ELECTRICAL INTEGRITY OF UNDERGROUND CABLE NETWORKS IN ACCORDANCE WITH BS 7671** 1. The Contractor will be instructed by the Engineer as and when to carry out proving electrical integrity on an underground cable network. 2. Inspection and proving of the cable network shall be carried out in accordance with the Electricity at Work Regulations 18th Edition, and any other updated Editions that supersede the current edition and the following:- i. For networks (b), (c), (e), (f), (g), (h), (j) apply 3. The Contractor shall ensure that the access doors to the Road Lighting, lit sign unit and feeder pillar are securely attached before leaving the site. Where it is not possible to lock or repair an existing door a stainless steel band and buckle must be used to prevent unauthorised access. In

Contract Specific Additional, Substitute and cancelled clauses, tables and figures included in the Contract

Additional Clauses, Tables and Figures:	
Clause No.	**Title and Written Text**
	situations where the door is missing a temporary door must be fitted. Any such repairs shall be reported to the Engineer within 5 working days. 4. The unscheduled repair Works Order, issued by the Engineer giving details of each Road Lighting, lit sign unit and feeder pillar tested, shall be signed by the Contractor indicating the completed work prior to being returned to the Engineer. The completed Client forms shall be returned by the Contractor to the Engineer at daily intervals on completion of the works.

Contract Specific Additional, Substitute and cancelled clauses, tables and figures included in the Contract

Additional Clauses, Tables and Figures:	
Clause No.	**Title and Written Text**
2733AR	**DOUBLE POLE ISOLATION** 1. The installation of double pole isolator shall fully comply with the requirements of this section and amendments as specified in the Contract but shall not include for the supply of the double pole isolator as defined in Appendix 14/4. 2. A double pole 32 amp “lock off” isolator complete with BS88-1:2007 fuse shall be provided in the base compartment of all new and or replacement lighting units and lit Traffic Sign units.
2734AR	**ERECTION , TESTING AND REMOVAL OF SEASONAL LIGHTING** 1. The Contractor shall store all seasonal lighting at their depot. 2. The Contractor shall 2 months prior to required installation date visually inspect seasonal lighting for signs of damage in the store. 3. The Contractor shall electrically test (continuity, insulation resistance and lamp failures) seasonal lighting equipment. 4. The Contractor shall advise the Client of all damage faults found during inspection/test, the Client to arrange for repair or replacement of any fixed illuminations reported by Contractor. 5. The Contractor shall replace all faulty lamps, lamps to be provided free issue by the Client , lamps located in store. 6. The Contractor shall on installation date, deliver seasonal lighting to sites within the borough of North East Lincolnshire. 7. The Contractor shall visually inspect any existing Columns, poles or brackets/band prior to installation, any observations to be reported to the Client for repair/replacement as required by others. 8. The Contractor shall electrically test and visually inspect all on site electrical equipment prior to installation and connection of festive lighting and report findings to the Client . 9. The Contractor shall install seasonal lighting to existing Column, pole or brackets/band. 10. The Contractor shall electrically connect and make live seasonal lighting. 11. The Contractor shall test installation and provide test certificate. 12 The Contractor shall, when notified by the Client , take down, label up with location details all seasonal lighting, and store safely.

Contract Specific Additional, Substitute and cancelled clauses, tables and figures included in the Contract

Additional Clauses, Tables and Figures:	
Clause No.	**Title and Written Text**
2735AR	**ROUTINE MAINTENANCE OF LIT TRAFFIC SIGNS, BOLLARDS AND BEACONS** 1. The frequency of routine maintenance shall be in accordance with the requirements of Appendix 1/13. 2. The sign face shall be thoroughly cleaned using water and a suitable detergent as shall all photo-electric cell control units, inside and outside of luminaires, refractors, reflectors and other components which effect the optical performance of the luminaire. The sign identification number shall also be cleaned. The complete exterior of lit Traffic Bollards, Pedestrian refuge and/or Crossing Globes shall likewise be thoroughly cleaned using water and a suitable detergent. No abrasives or abrasive powder shall be used. Luminaires, lamps and associated optical components shall be left in correct adjustment after cleaning. At every routine maintenance visit every lit Traffic Sign shall be checked for correct operation. 3. The base compartment or cable termination box of each lit Traffic Sign, pedestrian refuge and/or crossing globe shall be thoroughly cleaned out by means of a dry brush and cloth taking care not to damage any equipment contained therein. 4. All switched services provided by the DNO, 5th core network or switch wire will be apparently dead during daylight hours. The Contractor should determine whether fault equipment is fed by this method and ensure that isolation and energisation is under their direct control before working on the installation. 5. During Routine Maintenance the Contractor shall:- i. Carry out a thorough inspection of each lit Traffic Sign, lit Traffic Bollard, pedestrian refuge and/or crossing globe. ii. Examine, tighten and lubricate all grub screws, screws and locking devices. iii. Align the sign face and luminaires with respect to the road and adjust as necessary. iv. Examine all lit Traffic Sign, lit Traffic Bollard, pedestrian refuge and/or crossing posts for any corrosion to metal post, brackets, luminaires, control gear and doors and for the deterioration of internal wiring insulation. v. Operate and lubricate all toggles, wing nuts, hinges, door locks, raising and lowering gear and other moving parts. vi. Examine all electrical terminations for signs of corrosion, condensation, fracture or tracking and shall renew or clean as necessary and grease. Special attention shall be paid to

Contract Specific Additional, Substitute and cancelled clauses, tables and figures included in the Contract

Additional Clauses, Tables and Figures:	
Clause No.	**Title and Written Text**
	aluminium cable terminations in respect of relaxation and high resistance contact. vii. Test photo-electric control units for correct operation. Test and adjust time switches for correct settings and operation. viii. Replace any faulty electrical components in accordance with Clause 2739. All replacements shall be of the correct type, rating and characteristics and shall be fully compatible with all other circuit components, in accordance with the schedules contained in the contract. The contractor shall label any faulty component to indicate the unit number and date of removal and store for 30 days to enable inspection by Engineer. ix. Replace damaged or missing luminaire bowls with units of the correct type and size. x. Securely attach all access doors to the post before leaving the site. Where it is not possible to lock or repair an existing door a stainless steel band and buckle must be used to prevent unauthorised access. In situations where the door is missing a temporary door must be fitted. Any such repairs shall be reported to the Engineer within 5 working days. 6. The Contractor shall submit to the Engineer within 5 working days of the routine maintenance a list of all structural defects and any other defects which have not been rectified and which require further attention, along with identified photographic evidence of each defect. 7. The Contractor shall update the Asset Register of any changes/discrepancies. 8. At the commencement of the Contract, the Contractor will arrange, in the presence of the Engineer, for their maintenance crew to maintain five lit Traffic Signs and five lit Traffic Bollards in order to establish and agree the standard and quality of service required by the Engineer. The level of performance established will be used as a reference for all future operations of this type.

Contract Specific Additional, Substitute and cancelled clauses, tables and figures included in the Contract

Additional Clauses, Tables and Figures:	
Clause No.	**Title and Written Text**
2736AR	**UNSCHEDULED MAINTENANCE LIT TRAFFIC SIGN, BOLLARDS AND BEACONS** 1. The frequency of unscheduled maintenance shall be in accordance with the requirements of Appendix 1/13. 2. The sign face shall be thoroughly cleaned using water and a suitable detergent as shall all photo-electric cell control units, inside and outside of luminaires, refractors, reflectors and other components which effect the optical performance of the luminaire. The sign identification number shall also be cleaned. The complete exterior of lit Traffic Bollards, Pedestrian refuge and/or Crossing Globes shall likewise be thoroughly cleaned using water and a suitable detergent. No abrasives or abrasive powder shall be used. Luminaires, lamps and associated optical components shall be left in correct adjustment after cleaning. At every maintenance visit every lit Traffic Sign shall be checked for correct operation. 3. The base compartment or cable termination box of each lit Traffic Sign, pedestrian refuge and/or crossing globe shall be thoroughly cleaned out by means of a dry brush and cloth taking care not to damage any equipment contained therein. 4. All switched services provided by the DNO, 5th core network or switch wire will be apparently dead during daylight hours. The Contractor should determine whether fault equipment is fed by this method and ensure that isolation and energisation is under their direct control before working on the installation. 5. During Unscheduled Maintenance the Contractor shall:- i. Carry out a thorough inspection of each lit Traffic Sign, lit Traffic Bollard, pedestrian refuge and/or crossing globe. ii. Examine, tighten and lubricate all grub screws, screws and locking devices. iii. Align the sign face and luminaires with respect to the road and adjust as necessary. iv. Examine all lit Traffic Sign, lit Traffic Bollard, pedestrian refuge and/or crossing posts for any corrosion to metal post, brackets, luminaires, control gear and doors and for the deterioration of internal wiring insulation. v. Operate and lubricate all toggles, wing nuts, hinges, door locks, raising and lowing gear and other moving parts. vi. Examine all electrical terminations for signs of corrosion, condensation, fracture or tracking and shall renew or clean as necessary and grease.

Contract Specific Additional, Substitute and cancelled clauses, tables and figures included in the Contract

Additional Clauses, Tables and Figures:	
Clause No.	**Title and Written Text**
	Special attention shall be paid to aluminium cable terminations in respect of relaxation and high resistance contact. vii. Test photo-electric control units for correct operation. Test and adjust time switches for correct settings and operation. viii. Replace any faulty electrical components in accordance with Clause 2739. **(Please note that the cost of the faulty components and their installation is measured separately in the Schedule of Rates)**. All replacements shall be of the correct type, rating and characteristics and shall be fully compatible with all other circuit components, in accordance with the schedules contained in the contract. The Contractor shall label any faulty component to indicate the unit number and date of removal and store for 30 days to enable inspection by Engineer. ix. Replace damaged or missing luminaire bowls with units of the correct type and size. x. Securely attach all access doors to the post before leaving the site. Where it is not possible to lock or repair an existing door a stainless steel band and buckle must be used to prevent unauthorised access. In situations where the door is missing a temporary door must be fitted. Any such repairs shall be reported to the Engineer within 5 working days. 6. The Contractor shall submit to the Engineer within 5 working days of the routine maintenance a list of all structural defects and any other defects which have not been rectified and which require further attention. 7. The Contractor shall update the Asset Register, via the mobile device, with any changes or discrepancies 8. At the commencement of the Contract, the Contractor will arrange, in the presence of the Engineer, for their maintenance crew to maintain five lit Traffic Signs and five lit Traffic Bollards in order to establish and agree the standard and quality of service required by the Engineer. The level of performance established will be used as a reference for all future operations of this type.

Contract Specific Additional, Substitute and cancelled clauses, tables and figures included in the Contract

Additional Clauses, Tables and Figures:	
Clause No.	**Title and Written Text**
2737AR	**UNSCHEDULED MAINTENANCE OF ROAD LIGHTING UNIT** 1. Unscheduled maintenance shall be in accordance with the requirements of Appendix 1/13. 2. All photo-electric cell/CMS control units, inside and outside of luminaires, refractors, reflectors and other components which effect the optical performance of the luminaire shall be thoroughly cleaned, as shall the exterior surface of the luminaire body, using water and a suitable detergent. The Column identification number shall also be cleaned. No abrasives or abrasive powder shall be used. Luminaires, lamps and associated optical components shall be left in correct adjustment after maintenance. . 3. The base compartment of the light unit and/or wall/pole mounted termination/control gear compartments shall be thoroughly cleaned out by means of a dry brush and cloth taking care not to damage any equipment contained therein. 4. All switched services provided by the DNO, 5th core network or switch wire will be apparently dead during daylight hours. The Contractor should determine whether faulty equipment is fed by this method and ensure that isolation and energisation is under their direct control before working on the installation. 5. Lamp replacement (if deemed to be faulty) as required by Appendix 1/13 shall be carried out during maintenance visit in accordance with the schedule contained in the Contract. The Contractor shall indelibly mark each lamp with the month and year to indicate the date it is put into use whether at group lamp replacement or individual replacement on a repair visit. 6. During Unscheduled Maintenance visit the Contractor shall:- i. Carry out a thorough inspection of each Road Lighting unit. ii. Examine, tighten and lubricate all grub screws, screws and locking devices. iii. Align luminaires with respect to the road and adjust as necessary. iv. Examine all Columns for any corrosion to metal post, brackets, luminaires, control gear and doors and for the deterioration of internal wiring insulation. v. Operate and lubricate all toggles, wing nuts, hinges, door locks, raising and lowering gear and other moving parts. vi. Examine all electrical terminations for signs of corrosion,

Contract Specific Additional, Substitute and cancelled clauses, tables and figures included in the Contract

Additional Clauses, Tables and Figures:	
Clause No.	**Title and Written Text**
	condensation, fracture or tracking and shall renew or clean as necessary and grease. Special attention shall be paid to aluminium cable terminations in respect of relaxation and high resistance contacts. vii. Test photo-electric/cms control units for correct operation. Test and adjust time switches for correct settings and operation. viii. Replace any faulty electrical component in accordance with Clause 2739. **(Please note that the cost of the faulty components and their installation is measured separately in the Schedule of Rates)**. All replacements shall be of the correct type, rating and characteristics and shall be fully compatible with all other circuit components, in accordance with the schedules contained in the contract. The Contractor shall label any faulty component to indicate the unit number and date of removal and store for 30 days to enable inspection by Engineer. ix. Replace damaged or missing luminaire bowls with units of the correct type and size. x. Securely attach all access doors to the post before leaving the site. Where it is not possible to lock or repair an existing door a stainless steel band and buckle must be used to prevent unauthorised access. In situations where the door is missing a temporary door must be fitted. Any such repairs shall be reported to the Engineer within 5 working days. 7. The Contractor shall submit to the Engineer within 5 working days of the unscheduled maintenance a list of all structural defects and any other defects which have not been rectified and which require further attention. 8. The Contractor shall update the Asset Register, via the mobile device, with any changes or discrepancies. 9. At the commencement of the Contract, the Contractor will arrange, in the presence of the Engineer, for their maintenance crew to maintain five Columns in order to establish and agree the standard and quality of service required by the Engineer. The level of performance established will be used as a reference for all future operations of this type.

Contract Specific Additional, Substitute and cancelled clauses, tables and figures included in the Contract

Additional Clauses, Tables and Figures:	
Clause No.	**Title and Written Text**
2738AR	**UNSCHEDULED MAINTENANCE OF FEEDER PILLAR** 1. Unscheduled maintenance shall be in accordance with the requirements of Appendix 1/13. 2. All photo-electric cell control/cms units and the feeder pillar identification number shall be thoroughly cleaned using water and a suitable detergent. No abrasives or abrasive powder shall be used. Photo cells and contactors shall be tested for correct operation and left in full working order after a maintenance visit. 3. The interior of the feeder pillar shall be thoroughly cleaned out by means of a dry brush and cloth taking care not to damage any equipment contained therein. 4. During maintenance visit the Contractor shall:- i. Ensure that the access path and doors to the feeder pillar are clear prior to commencing works. ii. Carry out a thorough inspection of each feeder pillar, take internal and external photographs of the feeder pillar and upload to the Client's Software System via a mobile device. iii. Examine, tighten and lubricate all grub screws, screws and locking devices. iv. Examine the feeder pillar for damage and signs of any corrosion to metal feeder pillars, control gear and doors, for excessive wear and tear and for the deterioration of internal insulation. v. Operate and lubricate all toggles, wing nuts, hinges and door locks. vi. Examine all electrical terminations for signs of corrosion, condensation, fracture or tracking and shall renew or clean as necessary and grease. Special attention shall be paid to aluminium cable terminations in respect of relaxation and high resistance contacts. vii. Test photo-electric control units for correct operation. Test and adjust time switches for correct settings and operation. viii. Check holding down bolts for all feeder pillars as necessary. Remove the protection against corrosion system, check the torque setting of the bolts slacken and re-torque as necessary in accordance with the manufacturer's directions or as advised by the Engineer. Re-new the protection against corrosion system using new cold applied petrolatum-based tape containing a flexible synthetic fabric carrier.

Contract Specific Additional, Substitute and cancelled clauses, tables and figures included in the Contract

Additional Clauses, Tables and Figures:	
Clause No.	**Title and Written Text**
	ix. The Contractor shall ensure that the access doors to the feeder pillar are securely attached before leaving the site. Where it is not possible to lock or repair an existing door a stainless steel band and buckle must be used to prevent unauthorised access. In situations where the door is missing a temporary door must be fitted. Any such repairs shall be reported to the Engineer within 5 working days. 5. The Contractor shall submit to the Engineer within 5 working days of the maintenance visit a list of all structural defects, along with of any other defects which have not been rectified and which require further attention. 6. The Contractor shall verify that the record data for each feeder pillar on the schedule issued by the Engineer is correct. The Contractor shall update the Asset Register, via the mobile device, with any changes or discrepancies. 7. During the maintenance visit the Contractor shall:- i. Report on the proforma contained in Appendix 14/70 (or similar type form provided by the Contractor). Replace any failed or faulty electrical component affecting the operation of the feeder pillar and report on the appropriate Works Order.

Contract Specific Additional, Substitute and cancelled clauses, tables and figures included in the Contract

Additional Clauses, Tables and Figures:	
Clause No.	**Title and Written Text**
2739AR	**INSTALL COMPONENT ON ROAD LIGHTING UNIT, FEEDER PILLAR, LIT TRAFFIC SIGN, BOLLARDS AND BEACONS** 1. All defects reported to the Contractor by the Engineer shall be rectified in accordance with the requirements of Appendix 1/13. 2. During rectification of repairs the Contractor shall rectify any fault and replace any of the following equipment if found to be faulty with units which shall be fully compatible with all other components and of the correct type, rating and characteristics. All items removed shall be labelled showing the location and the date removed and should be stored separately for the Engineer's inspection. i. Lamp or Tube ii. Lamp or Tube Control Gear iii. Internal Wiring excluding Network Cabling iv. Photo Cells or Time Switches v. Luminaire parts (Lamp holders, Brackets, Bowls, In-line fuses, Heat Resistant Cabling) etc. vi. Loose or mis-aligned Luminaires vii. Column or Post Doors viii. Electrical Circuit Components (Fuses, fuse carriers, cut-outs, switch fuses, isolator, distribution board, circuit breakers) etc ix. Double Pole Isolator 3. The Contractor shall obtain the authorisation of the Engineer before rectifying the undernoted faults:- i. Wiring with defective insulation ii. TRS type wiring which is otherwise safe 4. Where a defect cannot be rectified due to an electricity supply failure or the need to replace a complete luminaire, post and/or sign face the Contractor shall notify the Engineer within 5 working days so that the necessary action can be taken. The replacement of a complete luminaire, post and/or sign face will not be regarded as a repair and will be subject to a specific instruction by the Engineer. 5. Where the foliage of trees and/or shrubs growing on the highway obstruct the lighting unit luminaire or sign face, luminaire or photo cell sensors, the

Contract Specific Additional, Substitute and cancelled clauses, tables and figures included in the Contract

Additional Clauses, Tables and Figures:	
Clause No.	**Title and Written Text**
	Contractor shall prune up to a maximum branch diameter of 25 mm and dispose of the trimmings. Where branches are cut back they shall be trimmed flush to the main branch or limb. Where pruning of trees on private property or heavier pruning than described above is required the Contractor will notify the Engineer within 5 working days. 6. The Contractor shall securely attach all access doors to the post before leaving the site. Where it is not possible to lock or repair an existing door a stainless steel band and buckle must be used to prevent unauthorised access. In situations where the door is missing a temporary door must be fitted. Any such repairs shall be reported to the Engineer within 5 working days. 7. The Contractor shall submit to the Engineer within 5 working days of the repair details of any structural defects, along with photographs of defects, and any other defects which have not been rectified and which require further attention. 8. Any sign mounted on highway equipment other than an approved Traffic Sign, bus stop, RAC or AA sign shall be noted by the Contractor and reported to the Engineer. **<u>Internal wiring of illuminated sign posts and road lighting units</u>**

Contract Specific Additional, Substitute and cancelled clauses, tables and figures included in the Contract

Additional Clauses, Tables and Figures:	
Clause No.	**Title and Written Text**
2740AR	The installation of internal wiring to existing sign posts and road lighting units shall include all works associated with this operation. The cabling should conform to the list below A) Internal wiring from isolator to luminaire shall be flexible multi-core copper conductor cables 300/500 volt grade, pvc insulated and sheathed complying with BS 6004 B) The minimum cross sectional area of conductors for sign posts, 5 and 6m mounting height road lighting units shall be 1.5mm^2 3 core flex C) The minimum cross sectional area of conductors for 8, 10 and 12m mounting height road lighting units shall be 2.5mm^2 3 core flex D) The minimum cross sectional area of conductors for PECU circuits shall be 1.5mm^2 for sign posts, 5 and 6m mounting height and 2.5mm^2 for 8, 10 and 12m mounting height road lighting units. E) Equipotential earth conductors shall be of 6mm^2 minimum cross sectional area to accord with Regional Electricity Company requirements. 1) After removing the fuses and isolating the cable, the cable shall be disconnected at the isolator and luminaire; 2) The redundant cable shall be removed; 3) A new cable conforming to the above Scope shall be installed; 4) The new cable shall be connected to the existing luminaire; 5) The new cable shall be connected to the double pole isolator; 6) The installation shall be tested; 7) Disposal of materials.

Contract Specific Additional, Substitute and cancelled clauses, tables and figures included in the Contract

Additional Clauses, Tables and Figures:	
Clause No.	**Title and Written Text**
2741AR	**<u>Optional Future Services</u>** Optional future services may be required, but not guaranteed, by the Client, as listed below, but not exhaustive: • The installation of retrofit LED lamps and/or gear trays to illuminated Traffic Signs • Painting of lampposts to the Client Scope requirements • Removal and installation of ticket machines including associated power supply works • Provision and installation of part-night or dimming photo cells • Provision and installation of CMS equipment ie nodes and collectors • Assisting with the installation and maintenance of CCTV projects • Provision and installation of advance notices for road works/schemes etc • Installation of temporary banners/notices etc onto lampposts All the above services, if required, will be on an “as and when” basis.

2. List of Substitute Clauses, Tables and Figures:

Clause No. (etc)	Title and written text
None	None

APPENDIX 0/2: CONTRACT-SPECIFIC MINOR ALTERATIONS TO EXISTING CLAUSES, TABLES AND FIGURES INCLUDED IN THE CONTRACT

Additional Clauses, Tables and Figures:	
Clause No. (etc)	Alterations to be made.
Series 100, Clause 110	Sub-Clause 1 delete in line 1 “within 4 weeks of the Date of the” and insert “on”.
Series 1400, Clause 1407	Sub-Clause 3 (iii) line 1 insert after “category 1”, and 2
Series 1400, Clause 1416	Add new Sub-Clause 8 6. Cut-outs shall be capable of accommodating a 32 amp double pole lock off isolator and a minimum of 2 No: outgoing fuse ways and shall meet the requirements of Appendix 14/4.

APPENDIX 0/3 - LIST OF NUMBERED APPENDICES REFERRED TO IN THE SPECIFICATION AND INCLUDED IN THE CONTRACT

List 'A': List of Numbered Appendices Referred to in the Specification for Highway Works

Volume No.	Completed by	Appendix. No.	Title	
			INTRODUCTION	
1		0/1	Contract-specific Additional, Substitute and Cancelled Clauses, Tables and Figures Included in the Contract	
1		0/2	Contract-specific Minor Alterations to Existing Clauses, Tables and Figures included in the Contract	
1		0/3	List of Numbered Appendices Referred to in the Specification and included in the Contract	
1		0/4	List of Drawings Included in the Contract	
1		0/5	Special National Alterations of the Overseeing Organisations of Scotland/Wales/Northern Ireland	Not Used
			PRELIMINARIES	
1		1/1	Temporary Accommodation and Equipment for the Engineer	Not Used
1		1/2	Vehicles for the Engineer	Not Used
1		1/3	Communication System for the Engineer	Not Used
1		1/4	Working and Fabrication Drawings	Not Used
1		1/5	Testing to be Carried out by the Contractor	
1		1/6	Supply and Delivery of Samples to the Engineer	Not Used
1		1/7	Site Extent and Limitations on Use	
1		1/8	Operatives for the Engineer	Not Used
1		1/9	Control of Noise and Vibration	
1		1/10	Structures to be Designed by the Contractor	Not Used
1		1/11	Structural Elements and Other Features to be Designed by the Contractor	Not Used
1		1/12	Setting Out and Existing Ground Levels	
1		1/13	Programme of Works	
1		1/14	Payment Applications	

Volume No.	Completed by	Appendix. No.	Title	
1		1/15	Accommodation Works	Not Used
1		1/16	Privately & Publicly Owned Services or Supplies	
1		1/17	Traffic Safety & Management	
1		1/18	Temporary Diversions for Traffic	Not Used
1		1/19	Routeing of Vehicles	Not Used
1		1/20	Recovery Vehicles for Breakdowns	Not Used
1		1/21	Information Boards	
1		1/22	Progress Photographs	Not Used
1		1/23	Risks to Health and Safety from Materials or Substances	
1		1/24	Quality Management System	
1		1/25	Temporary Closed Circuit Television (CCTV) System for Monitoring of Traffic.	Not Used
1		1/26	Temporary Automatic Speed Camera System for the Enforcement of Mandatory Speed Limits at Roadworks (TASCAR)	Not Used
1		1/27	Temporary Automatic Speed Camera System for the Enforcement of Mandatory Speed Limits at Roadworks (TASCAR) – Particular Requirements	Not Used
			SITE CLEARANCE	
1		2/1	List of Buildings etc to be Demolished	Not Used
1		2/2	Filling of Trenches and Pipes	Not Used
1		2/3	Retention of Material Arising from Site Clearance	
1		2/4	Explosives and Blasting	Not Used
1		2/5	Hazardous Materials	
			FENCING AND ENVIRONMENTAL BARRIERS	
1		3/1	Fencing, Gates and Stiles	Not Used
1		3/2	Environmental Barriers	Not Used

Volume No.	Completed by	Appendix. No.	Title	
1			**ROAD RESTRAINT SYSTEMS (VEHICLE & PEDESTRIAN)**	
1		4/1	Road restraint systems (Vehicle & Pedestrian)	Not Used
1		4/2	Information required to demonstrate compliance of Road Restraint System to BS EN 1317-1, BS EN 1317-2, BS EN 1317-3 and DD ENV 1317-4:2002	Not Used
			DRAINAGE AND SERVICE DUCTS	
1		5/1	Drainage Requirements	Not Used
1		5/2	Service Duct Requirements	
1		5/3	Surface Water Channels and Drainage Channel Blocks	Not Used
1		5/4	Fin Drains and Narrow Filter Drains	Not Used
1		5/5	Combined Drainage and Kerb Systems	Not Used
1		5/6	Linear Drainage Channel Systems	Not Used
1		5/7	Thermoplastic Structural Wall Pipes and Fittings	Not Used
			EARTHWORKS	
1		6/1	Requirements for Acceptability & Testing etc of Earthworks Materials	Not Used
1		6/2	Requirements for Dealing with Class U2 Unacceptable Material	Not Used
1		6/3	Requirements for Excavation, Deposition, Compaction (Other than Dynamic Compaction)	Not Used
1		6/4	Requirements for Class 3 Material	Not Used
1		6/5	Geotextiles Used to Separate Earthworks Materials	Not Used
1		6/6	Fill to Structures & Fill Above Structural Foundations	Not Used
1		6/7	Sub-formation & Capping & Preparation & Surface Treatment of Formation	Not Used
1		6/8	Topsoiling, Grass Seeding and Turfing	Not Used
1		6/9	Earthwork Environmental Bunds, Landscape Areas, Strengthened Embankments	Not Used

Volume No.	Completed by	Appendix. No.	Title	
1		6/10	Ground Anchorages, Crib Walling and Gabions	Not Used
1		6/11	Swallow Holes & Other Naturally Occurring Cavities & Disused Mine Workings	Not Used
1		6/12	Instrumentation & Monitoring	Not Used
1		6/13	Ground Improvement	Not Used
1		6/14	Limiting Values for Pollution of Controlled Waters	Not Used
1		6/15	Limiting Values for Harm to Human Health and the Environment	Not Used
1		6/70	Earthworks Schedule	
			ROAD PAVEMENTS - GENERAL	
1		7/1	Permitted Pavement Options	Not Used
1		7/2	Excavation, Trimming & Reinstatement of Existing Surfaces	
1		7/3	Surface Dressing	Not Used
1		7/4	Bond Coats, Tack Coats and other Bituminous Sprays	Not Used
1		7/5	In Situ Recycling : The Remix and Repave Processes	Not Used
1		7/6	Breaking Up or Perforation of Existing Pavement	Not Used
1		7/7	Slurry Surfacing Incorporating Microsurfacing	Not Used
1		7/8	Not Used	Not Used
1		7/9	Cold-Milling (Planing) of Bituminous Bound Flexible Pavement	Not Used
1		7/10	Worksheet Pro Forma for Results of Testing for Constituent Materials Recycled Aggregate and Recycled Concrete Aggregate	Not Used
1		7/11	Overband and Inlaid Crack Sealing Systems	Not Used
1		7/12	Arrester Beds	Not Used
1		7/13	Saw-Cut and Seal Bituminous Overlays on Existing Jointed Concrete Pavements	Not Used
1		7/14	Preparation of Jointed Concrete Pavements Prior to Overlaying and Saw-Cut and Seal of the Bituminous Overlay	Not Used
1		7/15	Saw-Cut, Crack and Seat Existing Jointed Reinforced Concrete Pavements	Not Used

Volume No.	Completed by	Appendix. No.	Title	
1		7/16	Cracking and Seating of Existing Jointed Unreinforced Concrete Pavements and Hydraulically Bound Mixture (HBM) Bases	Not Used
1		7/17	Cracking Plant and Equipment Progress Record	Not Used
1		7/18	Site Specific Details and Requirements for Cold Recycled Bitumen Bound Material	Not Used
1		7/19	Back-Analysis of Falling Weight Deflectometer (FWD) Measurements Made on Concrete Pavements Treated by Fractured Slab Techniques	Not Used
1		7/20	Site Specific Details and Requirements for Inducing Cracks	Not Used
1		7/21	Surface Dressing - Recipe Specification	Not Used
1		7/22	Repairs to Potholes	Not Used
			KERBS, FOOTWAYS AND PAVED AREAS	
1		11/1	Kerbs, Footways and Paved Areas	Not Used
1		11/2	Access Steps	Not Used
			TRAFFIC SIGNS	
1		12/1	Traffic Signs : General	
1		12/2	Traffic Signs : Marker Posts	Not Used
1		12/3	Traffic Signs : Road Markings and Studs	Not Used
1		12/4	Traffic Signs : Cones, Cylinders, FTD's & Other Traffic Delineators	Not Used
1		12/5	Traffic Signs : Traffic Signals	Not Used
1		12/6	Traffic Signs : Special Sign Requirements on Gantries	Not Used
1		12/70	Routine Maintenance of Traffic Signs, Bollards and Beacons	
1		12/71	Additional Maintenance of Traffic Signs, Bollards and Beacons	

Volume No.	Completed by	Appendix. No.	Title	
			ROAD LIGHTING COLUMNS AND BRACKETS	
1		13/1	Information to be Provided When Specifying Lighting Columns and Brackets	
1		13/2	(Specification for Highway Works) Typical Lighting Column and Bracket Data Sheets 1 and 2	
1		13/3	Instructions for Completion of Lighting Column and Bracket Data Sheets	
1		13/4	Information to be Provided When Specifying CCTV Masts	Not Used
1		13/5	(Specification for Highway Works) Typical CCTV Mast Data Sheet	Not Used
1		13/6	Instructions for Completion of Cantilever Masts Data Sheets (05/01)	Not Used
1		13/7	Information to be Provided When Specifying Cantilever Masts (11/03)	Not Used
1		13/8	(Specification for Highway Works) Typical Cantilever Masts Data Sheets 1 and 2 (11/03)	Not Used
1		13/9	Instructions for Completion of CCTV Mast Sheets	Not Used
1		13/70	Routine Maintenance of Road Lighting Units	
1		13/71	Additional Maintenance of Road Lighting Units	
			ELECTRICAL WORK FOR ROAD LIGHTING AND TRAFFIC SIGNS	
1		14/1	Site Records	
1		14/2	Location of Lighting Units & Feeder Pillars	
1		14/3	Temporary Lighting	
1		14/4	Electrical Equipment for Road Lighting	
1		14/5	Electrical Equipment for Traffic Signs	
1		14/70	Electrical Testing & Inspection Certificate for Private Cable Networks	

Volume No.	Completed by	Appendix. No.	Title	
			COMMUNICATIONS	
1		15/1	Motorway Communications	Not Used
			PILING AND EMBEDDED RETAINING WALLS	
1		16/1	General Requirements for Piling and Embedded Retaining Walls	Not Used
1		16/2	Precast Reinforced and Prestressed Concrete Piles and Precast Reinforced Concrete Segmental Piles	Not Used
1		16/3	Bored Cast-in-Place Piles	Not Used
1		16/4	Bored Piles Constructed using Continuous Flight Augers and Concrete or Grout Injection through Hollow Auger Stems	Not Used
1		16/5	Driven Cast-in-Place Piles	Not Used
1		16/6	Steel Bearing Piles	Not Used
1		16/7	Reduction of Friction on Piles	Not Used
1		16/8	Non-Destructive Methods for Testing Piles	Not Used
1		16/9	Static Load Testing of Piles	Not Used
1		16/10	Diaphragm Walls	Not Used
1		16/11	Hard/Hard Secant Pile Walls	Not Used
1		16/12	Hard/Soft Secant Pile Walls	Not Used
1		16/13	Continuous Bored Pile Walls	Not Used
1		16/14	King Post Walls	Not Used
1		16/15	Steel Sheet Piles	Not Used
1		16/16	Integrity Testing of Wall Elements	Not Used
1		16/17	Instrumentation for Piles and Embedded Walls	Not Used
1		16/18	Support Fluid	Not Used
			STRUCTURAL CONCRETE	
1		17/1	Schedule for the Specification of Designed Concrete	Not Used
1		17/2	Concrete - Impregnation Schedule	Not Used
1		17/3	Concrete - Surface Finishes	Not Used

Volume No.	Completed by	Appendix. No.	Title	
1		17/4	Concrete – General	Not Used
1		17/5	Buried Concrete	Not Used
1		17/6	Grouting and Duct Systems for Post-Tensioned Tendons	Not Used
1		18/1	**STRUCTURAL STEELWORK** Requirements for Structural Steelwork	Not Used
1		19/1	**PROTECTION OF STEELWORK AGAINST CORROSION** (Specification for Highways Works)) Sheet No. Form HA/P1 (New Works) Paint system Sheet	
1		19/2	Requirements for Other Work	Not Used
1		19/3	(Specification for Highway Works) Form HA/P2 Paint Data Sheet	Not Used
1		19/4	(Specification for Highway Works) Form HA/P3 Paint Sample Dispatch List: Sheet 1 & 2	Not Used
1		19/5	General Requirements	Not Used
1		20/1	**WATERPROOFING FOR STRUCTURES** Waterproofing for Concrete Structures	Not Used
1		21/1	**BRIDGE BEARINGS** Bridge Bearing Schedule	Not Used
		22	**NOT USED**	
1		23/1	**BRIDGE EXPANSION JOINTS AND SEALING OF GAPS** Bridge Deck Expansion Joint Schedule	Not Used

Volume No.	Completed by	Appendix. No.	Title	
1		23/2	Sealing of Gaps Schedule (other than in Bridge Deck Expansion Joints)	Not Used
			BRICKWORK, BLOCKWORK AND STONEWORK	
1		24/1	Brickwork, Blockwork and Stonework	Not Used
			SPECIAL STRUCTURES	
1		25/1	Requirements for Corrugated Steel Buried Structures	Not Used
1		25/2	Requirements for Reinforced Earth and Anchored Earth Structures	Not Used
1		25/3	Requirements for Pocket Type Reinforced Brickwork Retaining Wall Structures	Not Used
1		25/4	Environmental Barriers	Not Used
			MISCELLANEOUS	
1		26/1	Ancillary Concrete	Not Used
1		26/2	Bedding Mortar	Not Used
1		26/3	Cored thermoplastic Node Markers	Not Used
1		26/70	Site/Street Furniture/Equipment	Not Used
			LANDSCAPE AND ECOLOGY.	
1		30/1	General.	Not Used
1		30/2	Weed Control.	Not Used
1		30/3	Control of Rabbits and Deer	Not Used
1		30/4	Ground Preparation.	Not Used
1		30/5	Grass Seeding, Wildflower Seeding and Turfing	Not Used
1		30/6	Planting.	Not Used
1		30/7	Grass, Bulbs and Wildflower Maintenance	Not Used
1		30/8	Watering.	Not Used
1		30/9	Establishment Maintenance for Planting.	Not Used
1		30/10	Maintenance of Established Trees and Shrubs.	Not Used
1		30/11	Management of Waterbodies	Not Used

Volume No.	Completed by	Appendix. No.	Title	
1		30/12	Special ecological Measures.	Not Used
			MAINTENANCE PAINTING OF STEELWORK	
1		50/1	(Specification for Highways Works) Form HA/P1 (Maintenance) Paint System Sheet	Not Used
1		50/2	Requirements for other Work	Not Used
1		50/3	(Specification for Highways Works) Form HA/P2 Paint Data Sheet	Not Used
1		50/4	(Specification for Highways Works) Form HA/P3 Paint Sample Despatch List: Sheet 1 & 2	Not Used
1		50/5	General Requirements	Not Used

APPENDIX 0/4 – LIST OF DRAWINGS INCLUDED IN THE CONTRACT

2. Standard Drawings
2(i) Supplied to each Tenderer

DRAWING No.	TITLE
SL/CD0001	Standard Arrangement for Traffic Signs type M21 and M31 Foundation Details
SL/CD0002	Standard Arrangement for Traffic Signs type M11 and M12 and Foundation Details
SL/CD0003	Standard Arrangements for Traffic Signs type S and Foundation Details
SL/CD0004	Standard Arrangement for Traffic Signs type F and Foundation Details
SL/CD0005 A	Standard Arrangement for Traffic Signs type P and Foundation Details
SL/CD0006 A	Standard Construction Details for Traffic Sign Face/Plate
SL/CD0007 A	Standard Arrangement for Base Lit Traffic Bollards
SL/CD0009 SL/CD/0009A	Details of Planting depths, brackets, projections, Lanterns spigots and Column Foundations for Steel Lighting Columns Type 1 and 2
SL/CD0010 A	Details of Lighting Column Foundations and Fixings for Flange Plate Columns with Single or Double Brackets Type 3
SL/CD0014	Electrical Warning Notices
SL/CD0015 A	Feeder Pillar Type 10 phase remote switches
SL/CD0016	Feeder Pillar Type 10 single phase remote switched wiring diagram
SL/CD0017	Feeder Pillar single phase foundation detail
SL/C/D0018 A	Feeder Pillar Type 12 single phase grouped switched
SL/CD0019 A	Feeder Pillar Type 12 single phase grouped switched wiring detail
SL/CD0022 A	Feeder Pillar Type 30 three phase remote switched

APPENDIX 0/4 (CONT'D) – LIST OF DRAWINGS INCLUDED IN THE CONTRACT

2. Standard Drawings (Cont'd)
2(i) Supplied to each Tenderer

DRAWING No.	TITLE
SL/CD0023 A	Feeder Pillar Type 30 three phase remote switched wiring detail
SL/CD0024	Feeder Pillar three phase foundation detail
SL/CD0025	Cable Terminations Within base Compartment of road lighting units and Lit Traffic Sign Units
SL/CD0026	Cable Terminations Within base Compartment of road Lighting Units and Lit Traffic Sign Units
SL/CD0027 A	Feeder Pillar Single Phase Type 16A and 16B
SL/CD0028 A	Double Pole Isolator and Secondary Fuse Unit Type E1 and E2
SL/CD0029	Neutral/Earth Electrode Type NE1 – NOT REFERENCED
SL/CD0030 A	Structural Condition of Road Lighting Column Condition Level
SL/CD0031 A	Structural Condition of Road Lighting Column Condition Level II
SL/CD0032 A	Structural Condition of Road Lighting Column Condition Level III
SL/CD0033 A	Structural Condition of Traffic Sign Condition Level I
SL/CD0034 A	Structural Condition of Traffic Sign Condition Level II
SL/CD0035 A	Structural Condition of Traffic Sign Condition Level III
SL/CD0036	Traffic Sign Position of Location Numbers

APPENDIX 1/5 – TESTING TO BE CARRIED OUT BY THE CONTRACTOR

1. The Contractor shall on completion of all new, altered or modified works carry out electrical inspections and tests in accordance with Electricity at Work Regulations 18th Edition, and any other updated Editions that supersede the current edition prior to commissioning or recommissioning the installation.

2. Completion and submission of test certificate to the Engineer as defined in Appendix 12/71, 13/71 and 14/70

APPENDIX 1/7 – EXTENT OF CONTRACT AREA AND SITE AND LIMITATIONS ON USE

1. **Extent of Contract Area**

The Contract Area is shown in Appendix A – Background NEL.

2. **Extent of Site**

The Site is defined in Appendix A – Background NEL and its location and extent will not be known until Works Order for the Works, facilities or services to be carried out, varied, or omitted has been issued in accordance with Conditions of Contract.

3. **Limitations on the Use of the Contract Area**

a) The Contractor shall comply with all of the various limitations and restrictions imposed through the Conditions of Contract and the Specification for Highway Works

b) The Contractors attention is particularly drawn to Conditions of Contract Special Conditions Clause 72 “Special Requirements”, Specification Clause 104.2 and Appendix 1/24 Quality Management System; Specification Clause 109 and Appendix 1/9 Control of Noise and Vibration; Appendix 1/16 Privately and Publicly Owned Services or Supplies; Appendix 1/17 Traffic Safety and Management; Specification Clause 124 and Appendix 1/23 Risks to Health and Safety from Materials or Substances.

c) Street Lighting Restricted Working Hours apply on the following streets / sites;

PARISH	ROAD	SECTION	TIMES	DAYS
CLEETHORPES	Alexandra Road	Full Length	08.00 - 18.00	Mon - Sat / May - September
CLEETHORPES	Alexandra Road	Full Length	08.00 - 18.00	Sunday all year round
CLEETHORPES	Barcroft Street	Full Length	2hours before - 1hr after	Match Days
CLEETHORPES	Blundell Avenue	Full Length	2hours before - 1hr after	Match Days
CLEETHORPES	Bramhall Street	Full Length	2hours before - 1hr after	Match Days
CLEETHORPES	Brereton Avenue	Full Length	2hours before - 1hr after	Match Days
CLEETHORPES	Central Promenade	Full Length	08.00 - 18.00	Mon - Sat / May - September
CLEETHORPES	Central Promenade	Full Length	08.00 - 18.00	Sunday all year round
CLEETHORPES	Clee Road	Full Length	08.00 - 18.00	Mon - Sat
CLEETHORPES	Clerke Street	Full Length	2hours before - 1hr after	Match Days
CLEETHORPES	Constitutional Avenue	Full Length	2hours before - 1hr after	Match Days
CLEETHORPES	Combe Street	Full Length	2hours before - 1hr after	Match Days
CLEETHORPES	Cross Street	Full Length	08:00 - 17:00	Market Days
CLEETHORPES	Daubney Street	Full Length	2hours before - 1hr after	Match Days
CLEETHORPES	Douglas Road	Full Length	2hours before - 1hr after	Match Days
CLEETHORPES	Elliston Street	Full Length	2hours before - 1hr after	Match Days
CLEETHORPES	Fuller Street	Full Length	2hours before - 1hr after	Match Days
CLEETHORPES	Garnett Street	Full Length	2hours before - 1hr after	Match Days
CLEETHORPES	Grimsby Road	Full Length	2hours before - 1hr after	Match Days
CLEETHORPES	Grimsby Road	Full Length	07:30 - 18:00	Mon - Sat
CLEETHORPES	Harrington Street	Full Length	2hours before - 1hr after	Match Days
CLEETHORPES	Hart Street	Full Length	2hours before - 1hr after	Match Days
CLEETHORPES	Hawthorne Avenue	Full Length	2hours before - 1hr after	Match Days

Extent of Contract Area and site and Limitations on Use

CLEETHORPES	High Cliff Road	Full Length	08.00 - 18.00	Mon - Sat / May - September
CLEETHORPES	High Cliff Road	Full Length	08.00 - 18.00	Sunday all year round
CLEETHORPES	High Street	Full Length	08.00 - 18.00	Mon - Sat
CLEETHORPES	Humberston Road	Full Length	08.00 - 18.00	Mon - Sat
CLEETHORPES	Imperial Avenue	Full Length	2hours before - 1hr after	Match Days
CLEETHORPES	Isaacs Hill	Full Length	08.00 - 18.00	Mon - Sat
CLEETHORPES	Kathleen Avenue	Full Length	2hours before - 1hr after	Match Days
CLEETHORPES	Kings Road	Full Length	08.00 - 18.00	Mon - Sat / May - September
CLEETHORPES	Kingsway	Full Length	08.00 - 18.00	Mon - Sat / May - September
CLEETHORPES	Kingsway	Full Length	08.00 - 18.00	Sunday all year round
CLEETHORPES	Lestrange Street	Full Length	2hours before - 1hr after	Match Days
CLEETHORPES	Lovett Street	Full Length	2hours before - 1hr after	Match Days
CLEETHORPES	Manchester Street	Full Length	2hours before - 1hr after	Match Days
CLEETHORPES	Mathews Street	Full Length	2hours before - 1hr after	Match Days
CLEETHORPES	May Street	Full Length	2hours before - 1hr after	Match Days
CLEETHORPES	Market Street	Full Length	08:00 - 17:00	Market Days
CLEETHORPES	Neville Street	Full Length	2hours before - 1hr after	Match Days
CLEETHORPES	North Promenade	Full Length	08.00 - 18.00	Mon - Sat / May - September
CLEETHORPES	North Promenade	Full Length	08.00 - 18.00	Sunday all year round
CLEETHORPES	Oliver Street	Full Length	2hours before - 1hr after	Match Days
CLEETHORPES	Oxford Street	Full Length	07:30 - 10:00 / 15:30 - 18:00	
CLEETHORPES	Osborne Street	Full Length	Market Days 8am - 5 pm	
CLEETHORPES	Park Street	Full Length	07.30 - 09.30 / 15.30 - 19.00	Mon - Sat
CLEETHORPES	Park View	Full Length	2hours before - 1hr after	Match Days
CLEETHORPES	Queens Parade	Full Length		
CLEETHORPES	Sea Road	Full Length	08.00 - 18.00	Mon - Sat / May - September
CLEETHORPES	Sea Road	Full Length	08.00 - 18.00	Sunday all year round
CLEETHORPES	Short Street	Full Length	Market Days 8am - 5 pm	
CLEETHORPES	Sidney Street	Full Length	2hours before - 1hr after	Match Days
CLEETHORPES	St Peters Avenue	Full Length	08.00 - 18.00	Mon - Sat
CLEETHORPES	Suggitts Lane	Full Length	2hours before - 1hr after	Match Days
CLEETHORPES	Sussex Street	Full Length	2hours before - 1hr after	Match Days
CLEETHORPES	Taylors Avenue	Full Length		
CLEETHORPES	Tiverton Street	Full Length	2hours before - 1hr after	Match Days
CLEETHORPES	Ward Street	Full Length	2hours before - 1hr after	Match Days
CLEETHORPES	Warneford Road	Full Length	2hours before - 1hr after	Match Days
CLEETHORPES	Wilson Street	Full Length	2hours before - 1hr after	Match Days
GRIMSBY	A180 Lockhill Rbt to Boundary	Full Length	Protected	
GRIMSBY	Bargate	Full Length	07.30 - 19.00	Mon - Sat
GRIMSBY	Baxtergate	Full Length	07.30 - 19.00	Mon - Sat
GRIMSBY	Bethlehem Street	Full Length	07.30 - 19.00	Mon - Sat
GRIMSBY	Boulevard Avenue	Full Length	07.30 - 09.30 / 15.30 - 19.00	Mon - Sat
GRIMSBY	Bradley Road	Full Length	07.30 - 09.30 / 15.30 - 19.00	Mon - Sat
GRIMSBY	Brighowgate	Full Length	07.30 - 09.30 / 15.30 - 19.00	Mon - Sat
GRIMSBY	Cartergate Link	Full Length	07:30 - 10:00 / 15:30 - 18:00	Mon - Sat
GRIMSBY	Church Lane	Full Length	07.30 - 19.00	Mon - Sat
GRIMSBY	Cleethorpe Road	Full Length	07.30 - 09.30 / 15.30 - 19.00	Mon - Sat
GRIMSBY	Cleethorpe Road (Old route)	Full Length	07:30 - 09:30 / 15:30 - 19:00	Mon - Sat

Extent of Contract Area and site and Limitations on Use

GRIMSBY	Convamore Road	From Pasture St - Wellington St	07.30 - 09.30 / 15.30 - 19.00	Mon - Sat
GRIMSBY	Corporation Road	From Pyewipe Rd - Beeson St	07.30 - 09.30 / 15.30 - 19.00	Mon - Sat
GRIMSBY	Cromwell Road	From Bowers Ave - Dudley St	07.30 - 09.30 / 15.30 - 19.00	Mon - Sat
GRIMSBY	Deansgate	Full Length	07.30 - 19.00	Mon - Sat
GRIMSBY	Dudley Street	Full Length	07.30 - 19.00	Mon - Sat
GRIMSBY	East St Marys Gate	Full Length	07.30 - 19.00	Mon - Sat
GRIMSBY	East Street	Full Length	07.30 - 09.30 / 15.30 - 19.00	Mon - Sat
GRIMSBY	Eleanor Street	Full Length	07.30 - 09.30 / 15.30 - 19.00	Mon - Sat
GRIMSBY	Ellis Way	Full Length	07.30 - 09.30 / 15.30 - 19.00	Mon - Sat
GRIMSBY	Frederick Ward Way	Full Length	07.30 - 19.00	Mon - Sat
GRIMSBY	Freeman Street	Full Length	07.30 - 09.30 / 15.30 - 19.00	Mon - Sat
GRIMSBY	Freeport Wharfe	Full Length	07:30 - 10:00 / 15:30 - 18:00	Mon - Sat
GRIMSBY	George Street	Full Length	07.30 - 19.00	Mon - Sat
GRIMSBY	Great Coates Road	Full Length	07.30 - 09.30 / 15.30 - 19.00	Mon - Sat
GRIMSBY	Grosvenor Street	Full Length	07.30 - 09.30 / 15.30 - 19.00	Mon - Sat
GRIMSBY	Hainton Avenue	Full Length	07.30 - 09.30 / 15.30 - 19.00	Mon - Sat
GRIMSBY	Humber Street	Full Length	07.30 - 09.30 / 15.30 - 19.00	Mon - Sat
GRIMSBY	Laceby Road	Full Length	07.30 - 09.30 / 15.30 - 19.00	Mon - Sat
GRIMSBY	Laceby Road (Old Route)	Full Length	07.30 - 09.30 / 15.30 - 19.00	Mon - Sat
GRIMSBY	Ladysmith Road	Full Length	07.30 - 09.30 / 15.30 - 19.00	Mon - Sat
GRIMSBY	Larmour Road	From Anderby Dr - Gt Coates Rd	07.30 - 09.30 / 15.30 - 19.00	Mon - Sat
GRIMSBY	Littlecoates Road	Full Length	07.30 - 09.30 / 15.30 - 19.00	Mon - Sat
GRIMSBY	Littlefield Lane	100m either side of Dudley Street	07.30 - 09.30 / 15.30 - 19.00	Mon - Sat
GRIMSBY	Old Market Place	Full Length	07:30 - 18:00	Mon - Sat
GRIMSBY	Louth Road	Full Length	07.30 - 09.30 / 15.30 - 19.00	Mon - Sat
GRIMSBY	Moody Lane	A180 R/bt to a point 40.0m North	07:30 - 10:00 / 15:30 - 18:00	Mon - Fri
GRIMSBY	Osborne Street	Full Length	07.30 - 19.00	Mon - Sat
GRIMSBY	Pasture Street	Full Length	07.30 - 09.30 / 15.30 - 19.00	Mon - Sat
GRIMSBY	Peaks Parkway (Victoria Street South to Peaks Farm Bridge	Full Length	07.30 - 09.30 / 15.30 - 19.00	Mon - Sat
GRIMSBY	Pyewipe Road	Full Length	07.30 - 09.30 / 15.30 - 19.00	Mon - Sat
GRIMSBY	Riby Square	Full Length	07.30 - 09.30 / 15.30 - 19.00	Mon - Sat
GRIMSBY	Robinson Street East	Full Length	07.30 - 09.30 / 15.30 - 19.00	Mon - Sat
GRIMSBY	Scartho Road	Full Length	07.30 - 19.00	Mon - Sat
GRIMSBY	South St Marys Gate	Full Length	07:30 - 18:00	Mon - Sat
GRIMSBY	Springfield Road	50m from Waltham Road	07:30 - 10:00 / 15:30 - 18:00	Mon - Fri
Gt. Coates	Station Road	Full Length	07.30 - 09.30 / 15.30 - 19.00	Mon - Sat
GRIMSBY	Town Hall Square	Full Length	07.30 - 09.30 / 15.30 - 19.00	Mon - Sat
GRIMSBY	Town Hall Street	Full Length	07.30 - 19.00	Mon - Sat
GRIMSBY	Victoria Street North	Full Length	07.30 - 09.30 / 15.30 - 19.00	Mon - Sat
GRIMSBY	Victoria Street South	Full Length	07.30 - 09.30 / 15.30 - 19.00	Mon - Sat
GRIMSBY	Victoria Street West	Full Length	07.30 - 19.00	Mon - Sat
GRIMSBY	Waltham Road	Full Length	07.30 - 09.30 / 15.30 - 19.00	Mon - Sat
GRIMSBY	Weelsby Road	Full Length	07.30 - 09.30 / 15.30 - 19.00	Mon - Sat
GRIMSBY	Wellowgate	Church Lane - Brighowgate	07:30 - 18:00	Mon - Sat

Extent of Contract Area and site and Limitations on Use

GRIMSBY	Welholme Road	100m from Bargate/Highfield Ave to Heneage Road	07.30 - 09.30 / 15.30 - 19.00	Mon - Sat
GRIMSBY	Westward Ho	Regents Garden - Bargate	07:30 - 10:00 / 15:30 - 18:00	Mon - Fri
Gt. Coates	Woad Lane	Full Length	07.30 - 09.30 / 15.30 - 19.00	Mon - Sat
GRIMSBY	Wybers Way	From Mayfair Dr to Great Coates Rd	07.30 - 09.30 / 15.30 - 19.00	Mon - Sat
GRIMSBY	Yarborough Road	Full Length	07.30 - 09.30 / 15.30 - 19.00	Mon - Sat
HUMBERSTON	Grimsby Road	Full Length	08.00 - 18.00	Mon - Sat
NEW WALTHAM	A16 from Station Road to County Boundary	Full Length	07.30 - 09.30 / 15.30 - 19.00	Mon - Sat
NEW WALTHAM	Hewitts Avenue	Full Length	07.30 - 09.30 / 15.30 - 19.00	Mon - Sat
NEW WALTHAM	Louth Road	Full Length	07.30 - 09.30 / 15.30 - 19.00	Mon - Sat
NEW WALTHAM	Louth Road link to New Waltham Bypass	Full Length	07.30 - 09.30 / 15.30 - 19.00	Mon - Sat
NEW WALTHAM	New Waltham Bypass from Hewitts Avenue to Peaks Parkway	Full Length	07.30 - 09.30 / 15.30 - 19.00	Mon - Sun
NEW WALTHAM	New Waltham Bypass from Peaks Parkway to Louth Road	Full Length	07.30 - 09.30 / 15.30 - 19.00	Mon - Sun
NEW WALTHAM	Peaks Parkway (From Peaks Farm Bridge to Louth Road Roundabout)	Full Length	07.30 - 09.30 / 15.30 - 19.00	Mon - Sat
NEW WALTHAM	Station Road	Full Length	07.30 - 09.30 / 15.30 - 19.00	Mon - Sat
HEALING	A1136 from A180 interchange to roundabout at Great Coates	Full Length	07.30 - 09.00 / 15.30 - 19.00	Mon - Sat
HEALING	Great Coates Road	Full Length	07.30 - 09.00 / 15.30 - 19.00	Mon - Sat
STALLINGBOROUGH	Kiln Lane	Full Length	07.30 - 09.30 / 15.30 - 19.00	Mon - Sat
STALLINGBOROUGH	Laporte Road	Full Length	07.30 - 09.30 / 15.30 - 19.00	Mon - Sat
STALLINGBOROUGH	Riby Road	Full Length	07.30 - 09.30 / 15.30 - 19.00	Mon - Sat
IMMINGHAM	A1173 Kings Rd Roundabout to Kiln Lane Roundabout	Full Length	08.00 - 10.00 / 15.30 - 18.00	Mon - Sat
IMMINGHAM	A1173 Kiln Lane Roundabout to A180 interchange	Full Length	08.00 - 10.00 / 15.30 - 18.00	Mon - Sat

Extent of Contract Area and site and Limitations on Use

IMMINGHAM	Habrough Road	Full Length	07.30 - 09.30 / 15.30 - 19.00	Mon - Sat
IMMINGHAM	Kings Road	Full Length	07.30 - 09.30 / 15.30 - 19.00	Mon - Sat
IMMINGHAM	Manby Road	Full Length	07.30 - 09.30 / 15.30 - 19.00	Mon - Sat
IMMINGHAM	Manby Road Bypass	Full Length	07.30 - 09.30 / 15.30 - 19.00	Mon - Sat
IMMINGHAM	Pelham Road	Full Length	07.30 - 09.30 / 15.30 - 19.00	Mon - Sat
IMMINGHAM	Queens Road	Full Length	07.30 - 09.30 / 15.30 - 19.00	Mon - Sat
IMMINGHAM	B1210 Calder Close to Roxton Lane		08.00 - 10.00 / 15.30 - 18.00	Mon - Sat
LACEBY	A46 Laceby Roundabout to Cottagers Plot	Full Length	07.30 - 09.00 / 15.30 - 18.00	Mon - Sat
LACEBY	Grimsby Road	Full Length		Mon - Sat
IRBY UPON HUMBER	A46 from Irby Upon Humber to Laceby Roundabout	Full Length	07.30 - 09.00 / 15.30 - 18.00	Mon - Sat
WALTHAM	B1203 from Brigsley to Waltham Cheapside	Full Length	07.30 - 09.30 / 15.30 - 18.00	Mon - Sat
WALTHAM	Barnoldby Road	Full Length	07.30 - 09.30 / 15.30 - 19.00	Mon - Sat
WALTHAM	Bradley Road	Full Length	07.30 - 09.30 / 15.30 - 19.00	Mon - Sat
WALTHAM	Grimsby Road	Full Length	07.30 - 09.30 / 15.30 - 19.00	Mon - Sat
WALTHAM	High Street	Full Length		
BRADLEY	Bradley Road	Full Length		
AYLESBY	Barton Street	Full Length		
LACEBY	Barton Street	Full Length	07.30 - 09.30 / 15.30 - 19.00	Mon - Sat
ASHBY CUM FENBY	Barton Street	Full Length	07.30 - 09.30 / 15.30 - 19.00	Mon - Sat
BEELSBY	Barton Street	Full Length	07.30 - 09.30 / 15.30 - 19.00	Mon - Sat
HATCLIFFE	Barton Street	Full Length		
HAWERBY	Barton Street	Full Length		

APPENDIX 1/7 (CONT'D) – EXTENT OF CONTRACT AREA AND SITE AND LIMITATIONS ON USE

4. Limitations on the Use of the Site

a) The Contractor will not have exclusive possession of the Site and must cater for other users of the highway within the site.

b) The Contractor's use of the site will be subject to all of the limitations and restrictions described in 3 above.

5. Limitations on Signage

The Contractor shall comply with the following additional restrictions on the signing of offices, stores, workshops, material storage, plant storage and the like during the currency of the Contract.

a) The Contractor shall obtain the approval of the Engineer to the sighting of all plant, equipment and materials before works commence.

b) Any existing items and materials to be recovered from within the site as part of the works shall be removed as soon as reasonably possible after recovery.

c) The Contractor shall allow for the use of any working area by the Client or any of its approved Contractors whilst engaged in any routine highway maintenance.

APPENDIX 1/9 – CONTROL OF NOISE AND VIBRATION
Noise

1. The Local Authority has informally agreed that the following measures would be acceptable, and these are given as a guide; however, it is for the Contractor to decide whether to seek the Local Authority's formal consent to their proposed methods of work and to the steps he proposes in order to minimise noise.

2. The **Site Normal Working Hours** shall be Monday to Friday between 07:00 and 19:00 hours and Saturday between 0700 and 1900 hours, with no working on Sundays or public holidays. Exceptionally, consent for work outside these hours may be given after any necessary consultation. Three days' notice is required from the Contractor when seeking such consent.

3. The noise levels (see Note (i) below) scheduled below for periods outside the **Site Normal Working Hours** will only be permitted when consent has been given to exceptional working.

4. The ambient noise level, Leq (see Note (ii) below) from all sources when measured 2.0 m above the ground at noise control stations numbers 1 to ... on Drawing Numbers ..... shall either not exceed the appropriate level given in the Schedule or not exceed by more than 3dB(A) the existing ambient noise level, Leq (see Note (iii) below), at the control station measured over the same period, whichever level is the greater. The maximum sound level at any noise control station shall not exceed the level given in the Schedule. Exceptionally the Contractor may be given permission to carry out works which exceed the noise levels in the Schedule, provided that ... days' notice of the date and timing of these works is given to the Overseeing Organisation and the Contractor demonstrates that he intends to take all reasonable measures to mitigate the noise nuisance. After consultations with the Local Authority and any other interested bodies a decision will be given within ... days of receipt of the notice.

Schedule		**Total Noise Levels at Control Stations**		
Period	**Hours**	**Ambient Noise Level, Leq Measured at Control Station: dB(A)**	**Period of Hours over which Leq is applicable**	**Maximum Sound Level (see Note (iv) below) measured at Control Station: dB(A)**
Mondays to Fridays Saturdays All unattended plant outside **Site Normal Working Hours**	**12** **3** **2**	**75dB** **65db** **65dB**	**0700 – 1900** **1900 – 2200** **2200 - 0700**	**96db** **75db** **70dB**

Notes:

(i) Noise levels relate to free field conditions. Where noise control stations are located 1 m from facades of buildings, the permitted noise levels can be increased by 3 dB(A).

(ii) The ambient noise level, Leq, at a noise control station is the total Leq from all the noise sources in the vicinity over the specified period.

(iii) The existing ambient noise level, Leq, at a control station is the total Leq from all the noise sources in the vicinity over the specified period prior to the commencement of the Works.

(iv) Maximum sound level is the highest value indicated on a sound level meter which meets the requirements of BS EN 60651 Type 1 or 2 set to SLOW response and frequency weighting A or on an integrating – averaging sound level meter to BS EN 60804.

APPENDIX 1/9 (CONT'D) – CONTROL OF NOISE AND VIBRATION

Vibration

1. Vibration limits shall apply over the Contract Area and Site Extents.

2. The Client office responsible for the control of vibration from construction works within the site is:

   Environment Team
   North East Lincolnshire Council
   Municipal Offices
   Grimsby
   North East Lincolnshire
   DN31 1HU

3. The Contractor shall also normally limit vibration levels arising from site activities at any residential building on any working day as follows:

Period	**Peak Particle Velocity in the vertical direction.**
0800hours - 2200hours	**1.5 mm/second**
2200hours – 0800hours	**0.5 mm/second (for short durations.**

Where vibration occurs, reference should be made to BS6472 – Human Response to Vibration in Buildings.

APPENDIX 1/12 – SETTING OUT AND EXISTING GROUND LEVELS

1. The setting out information shall be as agreed on Site with the Engineer prior to works commencing.

2. In order that the Engineer may carry out the necessary checks, the Contractor shall give 48 hours' notice that the setting out will be ready for checking.

3. No work which requires setting out shall be commenced until the setting out has received the approval of the Engineer.

4. Where setting out is undertaken by the Engineer the methods of referencing will be consistent with those used by the Contractor.

APPENDIX 1/13 – PROGRAMME OF WORKS

ROUTINE MAINTENANCE

1. Routine Maintenance (Traffic Signs & Electrical testing)

   (a) The Engineer will provide the Contractor with a Works Order for routine maintenance works prior to the commencement of the works.

   (b) The Contractor shall provide a programme of Works for routine maintenance on a monthly basis in the form of a location/time related bar chart produced as a result of a critical path analysis and shall comply with the specific requirements of Appendix 1/13, Part 1. The programme shall show the level of detail appropriate at each stage of the works and all activities and restraints, each of which shall be given a short title. All events shall be numbered and annotated with the earliest and latest event dates.

2. Repairs / Component Replacement

   (a) The Engineer will provide the Contractor with instructions of defective equipment on a daily basis or at such intervals as the Engineer may decide detailing those units which have been reported as being faulty. The repairs will be carried out against the works instruction issued above and completed within the timescales set out below.

APPENDIX 1/13 (CONT'D) – PROGRAMME OF WORKS

ADDITIONAL MAINTENANCE

1. Installation Works

(a) The Engineer will provide the Contractor with Works Orders for installation works at such intervals as the Engineer may decide detailing the works to be undertaken and the site definition in accordance with the NRSWA as updated in accordance with the Traffic Management Act 2004.

(b) The Contractor shall provide a programme for installation works. The Contractor will also be responsible for drafting, supply and delivery of all pre, and post Consultation letters required for all Capital works schemes which meet the criteria for Consultation, and the Engineer will notify the Contractor which schemes require consultation. The wording of all consultation letters to be agreed with the Engineer prior to delivery.

(1a) Minor Works with Excavation

Works less than 5 Columns within a 500m radius or 10 Columns in a street or a 30m length of trench.

(i) On non-traffic sensitive streets, a notice of works is required from the Contractor other than a weekly programme.
(ii) On traffic sensitive streets a one month and a 7 day notice are required to be served by the Engineer following agreement of the Contractor's programme.

(1b) Standard Excavation

Works greater than 5 Columns within a 500m radius or 10 Columns in a street or a 30m length of trench.

(i) On non-traffic sensitive streets, no notice of works is required from the Contractor other than a weekly programme.
(ii) On traffic sensitive streets a one month and a 7 day notice are required to be served by the Engineer following agreement of the Contractor's programme.

2. Emergency Works

The Contractor may carry out the replacement of damaged sign and road lighting equipment and one for one replacements without the production of a works programme after receipt of a Works Order from the Engineer and complying with the General Requirements of this Appendix.

GENERAL

1. The Contractor shall take in to account in their programme of works the formal notices required in accordance with the Traffic Management Act 2004. The Contractor shall issue the notices under this Act and provide regular and timely updates with respect to progress to ensure compliance with the Act.

2. The Contractor shall prepare their programme to ensure that all operations shall take place in the general direction of the traffic flow and are carried out during normal working hours, avoiding peak hours on roads with heavy traffic volumes except were instructed otherwise in writing by the Engineer.

APPENDIX 1/13 (CONT'D) – PROGRAMME OF WORKS

3. During the currency of the Contract other Contractors may be employed to carry out works on the network. The Engineer will notify the Contractor a minimum of two weeks in advance of any lane closures to be implemented by other Contractors. The Contractor may not carry out work in the area of such lane closures other than within the confines of such closures.

4. The Contractor shall notify the Engineer at least two weeks in advance of any closures he wishes to implement.

5. No work shall be carried out on Dual Carriageways and Principal Roads within one day on either side of Bank Holidays. Where these occur at a weekend the Bank Holiday shall be deemed to include the whole weekend in addition to any statutory Bank Holidays.

6. Not Used.

7. No work and/or the placing or removal of road safety traffic management and/or obstruction of continuous two-way traffic flow on Traffic sensitive streets(see street works schedule in Appendix 1/7)

8. No work shall be undertaken outside daylight hours except with the prior written agreement of the Engineer.

9. The Contractor shall provide on a daily basis details of the work completed during the preceding week and shall provide separately the proposed work for the following week.

ACTIVITY	FREQUENCY	TIME FOR COMPLETION FROM THE COMMENCEMENT DATE SPECIFIED IN THE WORKS ORDER
1. Routine Maintenance (Lit signs) (a) All Roads	1 year from date of previous routine maintenance	Within 22 working days
2. Group Lamp Replacement (a) All Roads All Night Burning 24 hour Burning	 Not required Not required	
3. Repairs (a) NON Traffic Sensitive Roads (b) Traffic Sensitive Roads	 As notified by the Engineer As notified by the Engineer	 Within 5 Working days Within 6 Working days
4. Painting of Posts	Not Required	
5. Installation of Works a) 1-5 Signs b) 6-10 Signs c) Replacement of Damaged (i) Mandatory Signs (ii) All others	 As notified by the Engineer As notified by the Engineer As notified by the Engineer As notified by the Engineer	 Within 10 working days Within 15 working days Within 10 working days Within 15 working days

APPENDIX 1/13 (CONT'D) – PROGRAMME OF WORKS

STREET LIGHTING UNSCHEDULED MAINTENANCE AND INSTALLATION

ACTIVITY	FREQUENCY	TIME FOR COMPLETION FROM THE COMMENCEMENT DATE SPECIFIED IN THE WORKS ORDER
1. Unscheduled Maintenance (Street Lights however this is not required) (a) All Roads	As instructed by the Engineer	
2. Group Lamp Replacement (a) All Roads SOX, SOX-E, MBF/U, MCF/U Lamps SON, SON-T, PL Lamps MCF/U and PL Lamps All Day Burning (24 hours) GLS Lamps (All Night Burning)	Not required	
3. Repairs (a) NON Traffic Sensitive Roads (b) Traffic Sensitive Roads	 As notified by the Engineer As notified by the Engineer	 Within 5 Working days Within 6 Working days
5. Installation of Works (a) 1-5 Columns (b) 6-10 Columns (c) Major Schemes (d) Replacement of Damaged Columns	 As notified by the Engineer As notified by the Engineer As agreed with the Engineer As notified by the Engineer	 Within 10 working days Within 15 working days Within 22 Working days Within 10 working days

APPENDIX 1/13 (CONT'D) – PROGRAMME OF WORKS

UNSCHEDULED FEEDER PILLAR MAINTENANCE AND INSTALLATION

ACTIVITY	FREQUENCY	TIME FOR COMPLETION FROM THE COMMENCEMENT DATE SPECIFIED IN THE WORKS ORDER
1. Unscheduled Maintenance (a) All Roads	As instructed by the Engineer	Within 22 working days
2. Repairs (a) All Roads	As instructed by the Engineer	Within 5 working days
3. Painting of Metal Cabinets	As instructed by the Engineer	Within 22 working days
4. Installation Works (a) Feeder Pillar	As instructed by the Engineer	Within 10 working days

EMERGENCY WORKS

ACTIVITY	FREQUENCY	TIME FOR COMPLETION ON SITE FROM RECEIPT OF ORAL OR WRITTEN NOTIFICATION OF THE EMERGENCY
1. Emergency Works (a) Category 1 (b) Category 2	As instructed by the Engineer As instructed by the Engineer	Within 2 hour Within 24 hours

PROVING ELECTRICAL INTEGRITY

ACTIVITY	FREQUENCY	TIME FOR COMPLETION ON SITE FROM RECEIPT OF ORAL OR WRITTEN NOTIFICATION OF THE EMERGENCY
1. Proving Electrical Integrity (a) Street Light and Lit sign units (b) Feeder Pillars and Cable Networks	6 years from date of previous test As instructed by the Engineer	Within 22 working days Within 22 working days

APPENDIX 1/14 – PAYMENT APPLICATIONS

The monthly statements submitted by the Contractor in accordance with the Conditions of Contract shall conform with the following requirements:-

1. The first monthly statement shall be in respect of work executed from the Date for Commencement of the Works up to but not including the same date in the calendar month immediately following. Succeeding monthly statements shall be related to the same date in the respective calendar month.

2., The monthly statements shall be in the form of a Summary which shall be identified in the same manner as the Tender Summary for amounts to which the Contractor considers they are entitled and in respect of Temporary Works or Constructional Plant. Other amounts to which the Contractor considers they are entitled shall be included in the statement and separately identified.

3. The Price List in support of the statement shall show:-

   (a) Works Order Number
   (b) Item number
   (c) Item description
   (d) Quantity executed to date
   (e) Unit of Measurement
   (f) Rate
   (g) Total value to date

4. Items not included in the Tender but considered by the Contractor to be appropriate for inclusion as measured work shall be included at the end of the relevant Price List Section or under new Price List Section Headings and in the form required by paragraph 3 above.

APPENDIX 1/16 – PRIVATELY AND PUBLICLY OWNED SERVICES AND SUPPLIES

1. The Contractor shall ascertain those privately and publicly owned services which are in the vicinity of the works to be undertaken.

2. Where privately and publicly owned services are affected by the works details of preliminary arrangements that have been made with Statutory Undertakers and others for the alteration of services affected by the works will be supplied by the Engineer with the Works Order.

3. The Contractor shall make all arrangements with the Statutory Undertakers and other concerned, for the co-ordination of their work with all work which needs to be done by them or their Contractors concurrently with the works.

4. Private services to individual properties are not generally listed or shown on drawings. The Contractor shall make arrangements with the Statutory Undertakers and others concerned for the phasing of all necessary disconnections and diversions of private services affected by the works.

5. Disconnected apparatus can be removed by the Contractor with the prior approval of the Authority concerned.

6. Statutory Undertakers contact addresses are listed below

National Grid Plant Protection Brick Kiln Street Hinckley Leicestershire LE10 0NA	North East Lincolnshire Council Street Lighting Section Municipal Offices Town Hall Square Grimsby DN31 1HU www.nelincs.gov.uk email – streetlighting@nelincs.gov.uk
Virgin Media Diversionary Works 1 Dove Wynd Strathclyde Business Park Bellshill ML4 3AL https://www.virginmedia.com/help/diversionaryworks	British Telecommunications New address found: 1 Braham Street London E1 8EE
Streetworks Manager Municipal Offices Town Hall Square Grimsby DN31 1HU www.nelincs.gov.uk	Senior Engineer (Drainage) Municipal Offices Town Hall Square Grimsby DN31 1HU www.nelincs.gov.uk
Senior Highways Maintenance Officer Municipal Offices Town Hall Square Grimsby DN31 1HU www.nelincs.gov.uk	Northern Powergrid Diversions 98 Aketon Road Castleford WF10 2DS https://northernpowergrid.com/castleford
Anglian Water Services Ltd Asset Engineers	

Lancaster House Lancaster Way Ermine Business Park Huntingdon PE29 6YJ	

7. Statutory Undertakers website addresses are listed below;

https://lsbud.co.uk
https://sso.northernpowergrid.com/login
http://openreach.com
http://www.nationalgrid.com

APPENDIX 1/17 –TRAFFIC SAFETY AND MANAGEMENT

TRAFFIC SAFETY AND MANAGEMENT REQUIREMENTS

Documents Referred To

Traffic Management Act 2004	DfT
New Roads and Street Works Act 1991	DfT
Department of Transport / County Surveyor's Society Joint Report providing Notes for Guidance in relation to the implementation of the requirements of the Health and Safety at Work Act 1974 so far as they affect personnel who are required to undertake work on Motorways and Trunk Roads	DTp/CS.JR
Traffic Signs Manual – Chapter 8 – Traffic Signs Safety Measures and Signs for Road Works and Temporary Situations: 2009 published by The Stationary Office, TSO (Formerly HMSO)	TSM8

The recommendations, in relation to all purpose single and dual carriageway Trunk Roads, of the DTp/CS.JR are considered to be equally applicable to non-trunk roads. The Contractor shall take this into account, when carrying out work on any trafficked highways.

1. TRAFFIC MANAGEMENT - GENERAL

   a) The Client shall issue the relevant notices under the Traffic Management Act 2004.

   b) The Contractor shall give 2 weeks' notice to the Client with respect to requiring a notice to be submitted under the Traffic Management Act 2004

   c) The Contractor will be responsible for providing regular and timely updates as far as progress to the Client to ensure compliance with the Act.

2. SAFETY AT ROADWORKS

   a) The Contractor shall comply with the Traffic Signs Manual – Chapter 8 "Traffic Safety Measures and "Safety at Street Works and Roadworks: 2013" and any subsequent amendments thereof and equip maintenance vehicles with all necessary amber flashing beacons on the cab and at the rear.

3. TRAFFIC SAFETY AND MANAGEMENT FOR SHORT DURATION WORKS

   i) ROADS FOR NORMAL WORKING HOURS

   a) The Contractor shall comply with the Traffic Signs Manual – Chapter 8 "Traffic Safety Measures and "Safety at Street Works and Roadworks: 2013" and any subsequent amendments thereof and equip maintenance vehicles with all necessary amber flashing beacons on the cab and at the rear.

b) High Visibility fluorescent retro reflective clothing to BS EN 471:2003 shall be worn by all persons working on the public highway.

ii) ROADS WITH RESTRICTED WORKING HOURS

(a) When carrying out Works on dual carriageways, trunk roads, classified roads and other roads that are traffic sensitive, the Contractor shall liaise with the Engineer and where necessary the Police in respect of restricted working hours and traffic regulations and control before commencing of Works.

(b) The restrictions, which vary from time to time, exist to control the placing and removal of Cones and/or Temporary Traffic Signs and/or obstruction of continuous two-way traffic flow. These restrictions generally apply during the following times:-

Monday - Saturday
i) 07.30 – 09.30 hours
ii) 15.30 – 19.00 hours

Roads having restrictions to enable a programme of Works to be formulated are listed in Appendix 1/7

iii) GENERAL

a) Where the circumstances of any particular case are not covered by the recommendations of Chapter 8, the Contractor shall submit their proposals for dealing with such situations in writing to the Engineer for their approval at least 7 days before the works are to commence.

b) Compliance with this Clause shall not relieve the Contractor of any of their obligations and liabilities under the Contract and under the relevant provisions of the Highways Acts.

4. DIVERSION OF TRAFFIC

a) The Contractor shall advise the Engineer as to the period of time which he will require in order to carry out the maintenance and/or group lamp replacement operations on each dual carriageway, trunk road or principal road. The Engineer will agree with the Contractor and the arrangements, dates and times for the necessary lane closures having carried out the necessary consultations with the Police and the Department of Transport (where necessary). The Engineer will give the Contractor not less than six weeks' notice of these arrangements, although the Engineer reserves the right to cancel or modify the arrangements of short notice due to overriding circumstances.

b) Lane closures for any Emergency work necessitated by accident, damage or failure of lighting units will be carried out by the Contractor as part of the normal Emergency call-out and will not be subject to advance notification.

5. GENERAL

a) When planning the traffic safety and management measures the Contractor shall include for either covering, blanking-out or attaching alternative messages to existing permanent traffic signs, within or outside the area of the Works, which conflict with the traffic safety and management proposals. These temporary alterations to permanent traffic signs shall, where the Engineer gives his consent, be carried out by the

Contractor, in compliance with Clause 1209, at the appropriate time in accordance with their traffic safety and management programme.

b) At least one traffic lane must be kept open to traffic in each direction on all dual carriageway roads at all times except when provision has been made in the Contract for other arrangements.

c) The control of traffic by means of Traffic Control Signals, priority control of "Stop-Go" boards will not be permitted on any dual carriageway, Trunk or Principal Road even when operating as a single carriageway under traffic management.

d) With respect to the safety zone, in addition to TSM8 and Dtp/CS.JR the following additional requirements shall apply:-

The minimum clearance between any area in which work is being undertaken and any part of the trafficked carriageway shall be 1.2 metres for all dual carriageways and single carriageways subject to a speed restriction of 50mph or greater and 500mm for single carriageways subject to a speed restriction of less than 50mph. The outer boundary of the safety zone shall be marked in the usual way by Traffic Cones and/or Cylinders. The inner boundary should be marked physically in an appropriate way wherever practicable to attract the workmen's attention to the limits of the working area.

e) Portable Traffic Signals must be of a type approved by the DTp under Section 65 of the Road Traffic Regulation Act 1984, Type Approval of Traffic Signal Equipment.

f) During the Christmas and New Year period from 16.30 on 23rd December until 08.30 on 3rd January and from 16.30 on the Thursday preceding any other bank holidays until 08.30 on the Wednesday following, all traffic lanes are to be opened to public traffic except where otherwise permitted by the Engineer.

g) Except when under the protection of cones and barriers, all site traffic must comply with the normal highway regulations. Site traffic may only enter or leave the working area using the designated entry or exit points, as shown in the Contract Documents or agreed by the Engineer and must do so in the direction of traffic flow. The Contractor shall not allow Site traffic to cross the central reserve of a dual carriageway to enter or exit the Works.

6. TEMPORARY SIGNS

a) Temporary sign supports shall not be constructed of scaffolding poles unless they are mounted behind safety fencing subject to the minimum requirements shown in Highway Construction Details G13 and G14 as for posts of 150mm diameter or more.

b) All signs used for traffic management and control shall be lit during the hours of darkness if erected in a lit area or within 50 metres of the last lighting Column of a lit area.

c) A minimum clearance of 450mm shall be provided between the carriageway in use and the nearest part of any temporary sign (excluding cones, cylinders, road markings and studs) or its supporting structure. Where this clearance cannot be met the signs shall be angled within the limits shown in Chapter 8. If this does not achieve sufficient clearance, and a satisfactory alternative location for the sign cannot be found, then the next smaller size of a sign shall be used and similarly angled, if necessary, to provide the specified clearance.

d) The Contractor shall erect and maintain all temporary portable signs in a manner to prevent them blowing over. Where signs have to be weighted down this should be in the form of fine granular material in a sack so that, should an impact occur, the sack will split, and the contents be dispersed without causing further problems.

e) All Cones and Traffic cylinders used in traffic control on the Site shall be kept clean at all times throughout the period control to the satisfaction of the Engineer. Where a Cone or Traffic Cylinder no longer has satisfactory reflective properties on its outer surface the Contractor shall replace the Cone or Traffic Cylinder with one to the required standard or renew the plastic reflective sleeve, whichever is appropriate.

7. TRAFFIC ORDERS

a) The operation of two-way traffic on one carriageway of a dual carriageway will not be permitted, except where provision has been made in the Contract for this to be implemented. This form of traffic control requires temporary closure orders under the Road Traffic Regulation Act for one carriageway of the dual carriageway and these must be made prior to the traffic control being required. Where temporary carriageway closure orders have not been provided for in the Contract and the Contractor considers temporary closure of one carriageway of a dual carriageway or of any other type of highway essential for the execution of the Works then he shall submit their proposals to the Engineer for consideration. Approval to go ahead with the processing of the closure orders will only be given if the Engineer considers them essential to the Works and in the case of Motorways or Trunk Roads after seeking approval from the Department of Transport.

Notice required by the Engineer for them to arrange for:-

a) amending or making traffic orders 8 weeks
b) authorising of non-prescribed signs 2 weeks
c) authorising portable Traffic Signals for Signal Control at junction 2 weeks

8. RESTRICTED LOCATIONS

a) Certain locations within the Contract area have been identified as being unsuitable for mobile lighting works during normal working hours. The Contractor will be advised of the locations, the total number of which will not exceed 1 percent of the total lighting stock.

b) Work at these locations (excluding Emergency Works) will be carried out between the hours of 18.30 and 07.30. The Contractor is advised that no additional payment will be made in respect of carrying out work at these locations. The timescales for the works given in Appendix 1/13 will not be affected by this.

APPENDIX 1/21 –INFORMATION BOARDS

Information Boards shall be erected to the requirements of Clause 110, and the particular requirements of this Appendix.

1. Information Boards shall be provided on all sites which have a duration of more than 24 hours and where Traffic Management is left in place.

2. The Information Board shall carry the name of the Client, Contractor, Description of Work with contact Telephone Number for emergencies and be in accordance with The Traffic Signs Regulations and General Directions 2002, diagram No 7008.

3. Where the works are of a shorter duration and define as Category “C” Works as defined by Chapter 8 of The Traffic Sign Regulations, Information Boards will not be required however, all Contractor’s plant must be properly identified with their name, address and telephone number for information and contact purposes.

4. The Contractor shall equip all vehicles with demountable sign boards that advise that the Contractor is employed on works on behalf of the Client.

APPENDIX 1/23: SUBSTANCES HAZARDOUS TO HEALTH

1. Substances hazardous to health shall include any material, which is either sprayed or dust which results from the mechanical cutting of road pavement or footpath materials which would cause discomfort or inconvenience to residents or occupiers of the adjacent properties or the public who are passing the Works. The Contractor shall consult with the Local Environmental Health Officer prior to undertaking such works and if so required, the Contractor shall undertake air quality monitoring.

2. Where substances are identified as being hazardous to health, a discomfort or an inconvenience to the workforce, residents or occupiers, the Contractor shall take all necessary precautions (e.g. using dust collection or damping down facilities on cutters) to prevent such hazard, discomfort or inconvenience and shall indicate in their method statement the proposals for dealing with such matters.

3. The Contractor shall be aware of the guidelines for the use of substances hazardous to health given in Advice Note SA 8/94. In particular it is anticipated that the following substances classified in the Advice Note are expected to be used and/or encountered and the Contractor shall follow the precautions contained therein for each substance.

Low Risk

Bituminous Tape	Sand	Natural Aggregate
Pulverised Fuel Ash	Blast Furnace Slag	Water Based Admixtures
Dust from cutting of Asphalts and Macadams		

Moderate Risk

Bitumen Joint Sealing Compounds etc	Thermoplastics
Cementitious Mortars and Grouts	Cement
Bitumen Cut Back	Concrete
Dust from Concrete, Cement etc	

High Risk

Bituminous Primers and Coatings

4. The Contractor shall not be relieved of their obligations under COSHH legislation.

5. The Contractor shall at all times prevent the spread by any means whatsoever of substances hazardous to health from a working area to an adjacent area.

APPENDIX 1/24: QUALITY MANAGEMENT SYSTEM

1. The Contractor shall institute and operate a quality management system complying with BS EN ISO 9002. The quality management system shall be described in a Quality Plan that shall be submitted to the Engineer for their acceptance.

   The Quality Plan shall cover the following items:

   i). Contractor's organisation and management
   ii). Contractor's method statements and construction procedures
   iii). Contractor's construction quality control

2. Items i) and iii) of the Quality Plan shall be submitted to the Engineer for their acceptance not later than 21 days after the award of the Contract.

   The Contractor shall submit other parts of the Quality Plan prior to start of any related work or activity and to a timetable included in item i).

3. Method statements are required in the Health and Safety Plan as listed in section 4.4 of Volume 3 Pre-Tender Health and safety Plan.

4 QUALITY PLAN REQUIREMENTS:

4.1 Contractor's Organisation and Management

This section of the Quality Plan shall include the following:

i). Definition of the Contract and its documentation.

ii). The organisation of the Contract, including the line of command and communication links between parties involved in the Contract

iii). Names, roles, responsibilities and authority of principals and key personnel.

iv). Identification of the Contractor's own staff responsible for overseeing each major activity.

v). The Contractor's control of sub-contracts.

vi). Document control.

vii). Programme for submission of method statements and Suppliers Quality Plans. The Quality Plan shall identify procedures (which may be a part of the Contractor's general procedures) that cover the topics listed below. Copies of these procedures shall be made available to the Engineer on request.

viii). The quality plans for sub-Contractors and suppliers of work, goods and materials which are the subject of quality management schemes.

ix). Procedure for the preparation, review and adjustment of programmes for the effective progression of the Works and the recording of this.

x). Control and approval of purchases of materials.

xi). Control of off-site activities (where appropriate).

APPENDIX 1/24 (CONT'D): QUALITY MANAGEMENT SYSTEM

xii). Procedures for the regular review and recording by the Contractor of the quality of the Works.

xiii). Control of personnel selection, based on their care, skill and experience.

xiiii). Management review/audits to monitor and exercise adequate control over the implementation of the quality plan.

xv). Any other relevant item.

4.2 Contractor's Method Statements and Construction Procedures

This section of the Quality Plan shall include:

4.2.1 Detailed method statements for each major activity whether directly controlled or subcontracted.

The method statements shall identify hold points and invoke:

i) Work instructions;

ii) Quality control procedures;

iii) Risk assessments;

iv) Compliance testing / inspection arrangements;

v) Any work acceptance procedures;

vi) For all activities that might affect the quality of the permanent and temporary works.

4.2.3. Identify the relevant construction procedures in the Contractor's own Quality Management System (and provide copies on request).

4.3 Contractor's Construction Quality Control

This section of the Quality Plan shall include:

4.3.1. Statement of the Contractor's organisation for quality control.

The quality plan shall identify procedures (which may be a part of the Contractor's general procedures) that cover the topics listed below. Copies of these procedures shall be made available to the Engineer on request.

4.3.2. Arrangements for 'receiving' and 'in-process' testing.

4.3.3. Control of test laboratories.

4.3.4. Control of test, measuring and inspection equipment.

4.3.5 Document control.

4.3.6. Procedure for monitoring and recording the inspection, test and approval status of the constructed/installed work.

4.3.7. Procedures for test and inspections for the purpose of the Contractor certifying that prior to covering up, each part of the Works are complete and conform to the Contract.

4.3.8. Procedure for the review of work submitted for review but not accepted as conforming to the Contract

4.3.9. Procedure for the collation of quality records as identified in BS EN ISO 9002, and provision of copies when requested by the Engineer.

4.4 Suppliers' Quality Plans

The Quality Plan shall include:

4.4.1. Definition of the product or service to be provided.

4.4.2. The organisation of the Supplier describing the line of command and stating the name of the senior Manager(s) responsible for the contracted Work and the names of the Supplier's on-site management representative. Contact addresses, telephone numbers etc. shall be provided.

4.4.3.* Identification of the relevant parts of the Supplier's quality system relevant to the product or service being provided. (Copies to be provided to the Engineer on request).

4.4.4. The control of personnel selection (at works and on site), including special requirements for skilled personnel, e.g. certification of welders, training of operatives, experience requirements etc.

Specific procedures for the following:

4.5.5.* Receipt and examination of certificates of conformity and test results for purchased products.

4.5.6.* Product identification and traceability.

4.5.7.* Handling, storage, packaging and delivery to Site and storage and handling on Site.

4.5.8 Quality records.

Note: Items marked * where available and appropriate, copies of the supplier’s quality system / general procedures may be acceptable

5 CONTRACTOR ACCREDITATIONS / MEMBERSHIP CRITERIA

The Contractor will also have accreditations / membership of the following:

Highways Electrical Registration Scheme (HERS) to NHSS8
National Electrical Registration Scheme (NERS)
National Inspection Council for Electrical Installation Contracting (NICEIC)
Construction line
Contractors Health and Safety Scheme (CHAS)

STANDARD SPECIFICATION AND CODE OF PRACTICE

Where an appropriate British Standard Specification or British Standard Code of Practice, issued by the British Standards Institution, is current at the date of tender, the Contractor is required to ensure that all goods and materials used or supplied, and all workmanship shall be at least in accordance with that Standard.

APPENDIX 2/3 – RETENTION OF MATERIALS ARISING FROM SITE CLEARANCE

The Contractor shall comply with the following additional conditions on the retention of materials arising from the site clearance of road lighting units, lit Traffic Signs, Traffic Signs and associated equipment during the currency of the Contract.

(i) The following materials are to be removed from site and transported to, and stored at the Contractors Depot for re-use on the Contract as instructed by the Engineer on the Works Order:-

(a) Steel road lighting Columns, brackets and Traffic Sign posts

(b) Road Lighting Luminaires

(c) Feeder Pillars

(d) Lit/non-lit Traffic Bollards including bases

(e) Lit Sign External Luminaires

(f) Traffic Sign Plates (various sizes)

(g) Festive and Summer Illuminations

(ii) The Contractor shall instigate and operate an inventory of recovered materials. The inventory shall describe the type of material, the quantity, the location from which it was recovered and where it was re-used. All recovered materials remain the property of the Client.

(iii) The seasonal illuminations to be installed under the contract are stored at the Contractor's depot.

APPENDIX 2/5 – HAZARDOUS MATERIALS

MATERIALS HANDLING

Documents Referred To.

Department of Environment, environmental Protection Act 1990.
Waste Management The Duty of Care. A Code of Practice.

1. Waste materials such as lamps and capacitors shall be disposed of in a safe manner in accordance with current regulations to ensure that substances which may be contained therein shall not be hazardous to health.

APPENDIX 5/2 – SERVICE DUCT REQUIREMENTS

1. Ducts for road lighting shall be in accordance with HCD drawing No: I2 and the following:-

   a) All ducts shall be of the Unplasticised polyvinyl-chloride (UPVC) type as defined in Table 5/2. Ducts shall be orange in colour, and ribbed, and be identified by means of continuous durable marking along the length with the following wording “ROAD LIGHTING CABLES BELOW”.

   b) Each duct shall be identified by means of a marker block in accordance with Clause 501.8 and Drawing No: HCD I1 with the following wording “RL DUCT” cast into the block.

   c) All ducts shall be constructed and backfilled to formation level in accordance with Drawing No: HCD I2 with the following dimensions for parameters “X” and “Y”.

      i) Single way duct 2x + 1y

      ii) Two way duct 3x +1y

   d) The average depth to invert 700mm in carriageway and 450mm in verges and footways.

   e) The ground level shall be taken at existing ground and depth of duct, and all measurements shall be taken from this datum.

APPENDIX 6/70 – EARTHWORKS SCHEDULE

1. HARD MATERIALS

These shall be as defined and consist of the following:-

a) existing pavements
b) footways
c) paved areas

The units and depth of this material are shown on the Reinstatement Schedules contained in Appendix 7/2 and as detailed on Contract Drawing SL/CD/0009 & SL/CD/0009A.

2. UNACCEPTABLE MATERIALS

These shall be any unbound material forming part of any of the above constructions, the limits and depths are as shown on the Reinstatement Schedules contained in Appendix 7/2.

3. ACCEPTABLE MATERIAL

These materials shall be as detailed in Table 6/1 Class C or M of this series.

APPENDIX 7/2 – EXCAVATION, TRIMMING AND REINSTATEMENT OF EXISTING SURFACES

1. All permanent reinstatements of carriageways and of footways shall be carried out in accordance with the Highways Authorities & Utilities Committee Specification for the Reinstatement of Openings in Highways published by the Stationary Office (Formerly H.M.S.O) and dated April 2010 (3rd Edition).

2. Reinstatements shall be carried out as instructed by the Engineer and will be detailed on the Works Order. Details of completed reinstatements will be supplied to the Engineer. Details will include location, measure and date of each reinstatement carried out.

3. When agreed with the Engineer a temporary reinstatement may be carried out, but this must be permanently reinstated within 10 days where the works do not involve the reconstruction of footways.

4. The temporary reinstatement shall be with the same material removed from the site during excavation and after defining shall be compacted in layers to within 50mm of the finished surface, the void is then to be filled with a layer of cold lay blacktop material of nominal size 20mm.

TYPE 1

CHOICE A

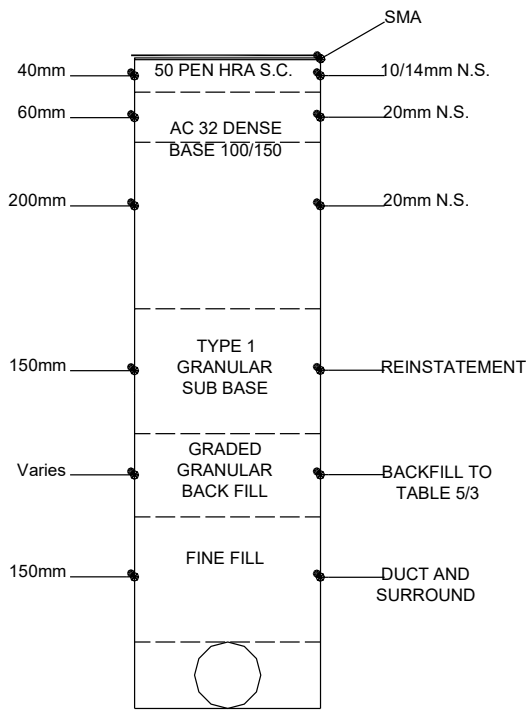

CHOICE B

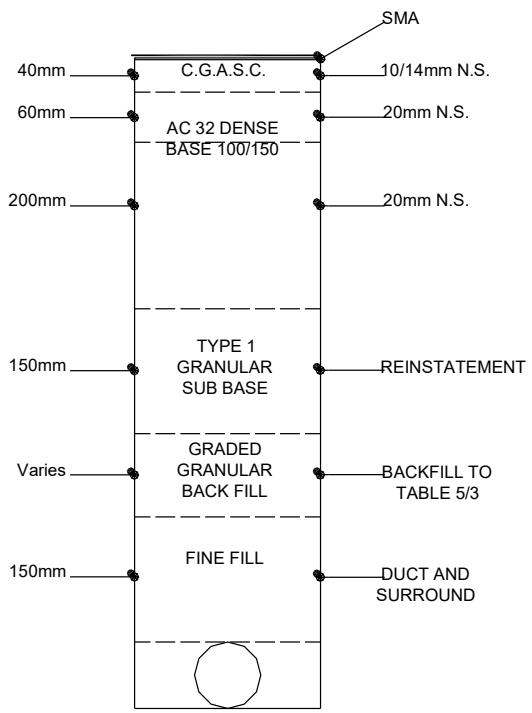

The vertical faces of the adjoining road surfacing must be treated with an approved bitumastic material before laying the wearing course. On new installations, neither the apparatus nor the fine fill may encroach into the sub base. 100 P.E.N. H.R.A may be used subject to local agreement.

APPENDIX 7/2 (CONT'D) – EXCAVATION, TRIMMING AND REINSTATEMENT OF EXISTING SURFACES

TYPE 2

CHOICE A

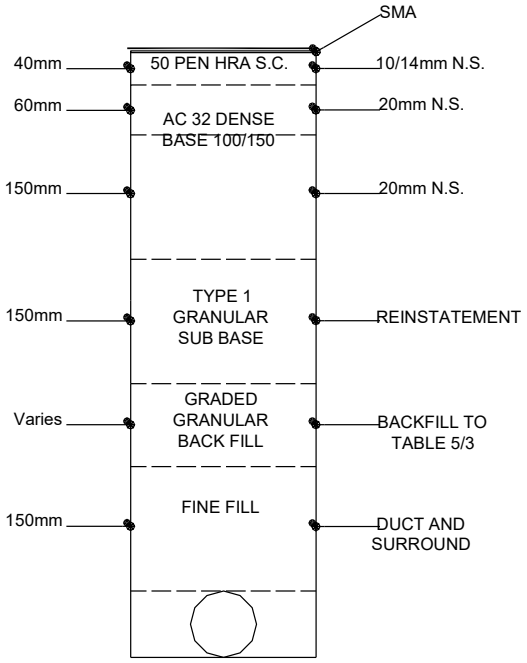

CHOICE B

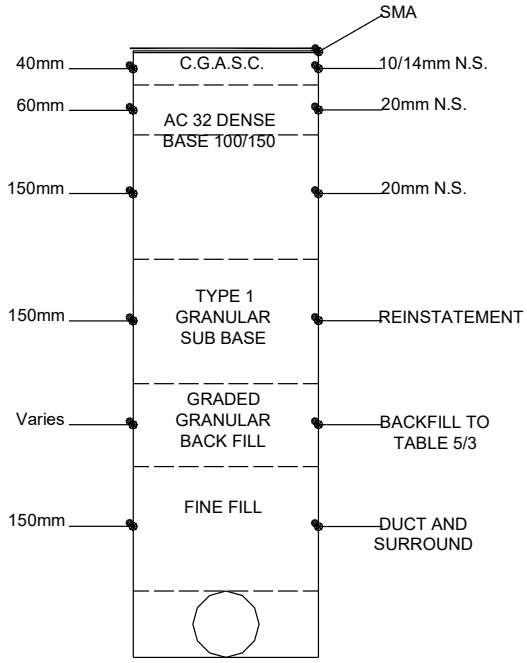

The vertical faces of the adjoining road surfacing must be treated with an approved bitumastic material before laying the wearing course. On new installations, neither the apparatus or the fine fill may encroach into the sub base. 100 P.E.N. H.R.A may be used subject to local agreement.

APPENDIX 7/2 (CONT'D) – EXCAVATION, TRIMMING AND REINSTATEMENT OF EXISTING SURFACES

TYPE 3

CHOICE A

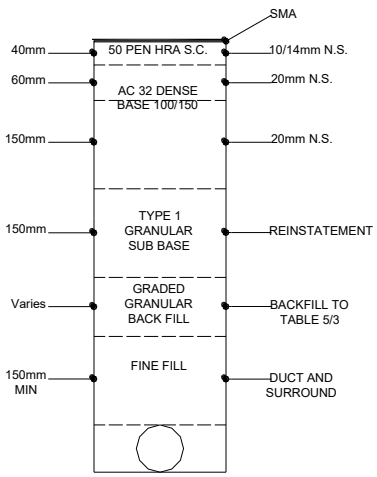

CHOICE B

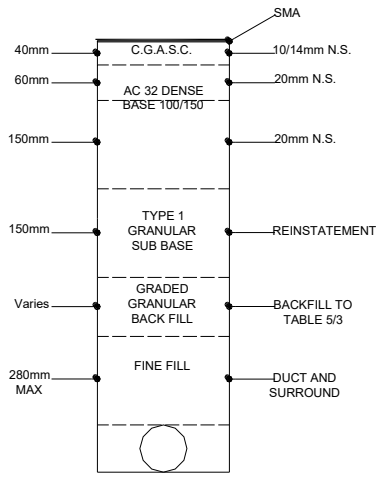

CHOICE C

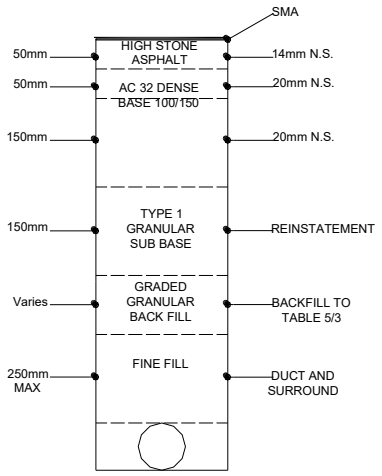

The vertical faces of the adjoining road surfacing must be treated with an approved bitumastic material before laying the wearing course. On new installations, neither the apparatus or the fine fill may encroach into the sub base.

TYPE 4

CHOICE A

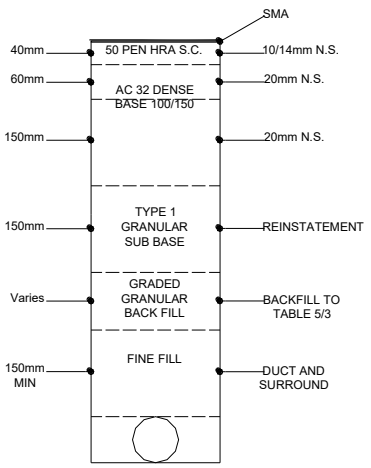

CHOICE B

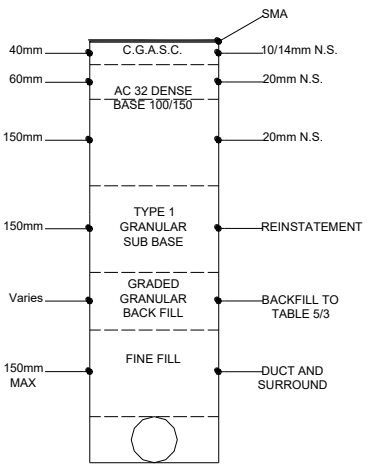

CHOICE C

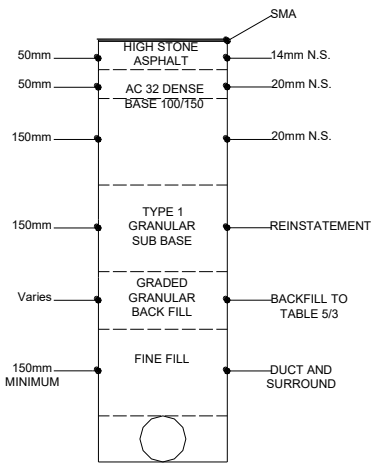

The vertical faces of the adjoining road surfacing must be treated with an approved bitumastic material before laying the wearing course. On new installations, neither the apparatus or the fine fill may encroach into the sub base.

APPENDIX 7/2 (CONT'D) – EXCAVATION, TRIMMING AND REINSTATEMENT OF EXISTING SURFACES

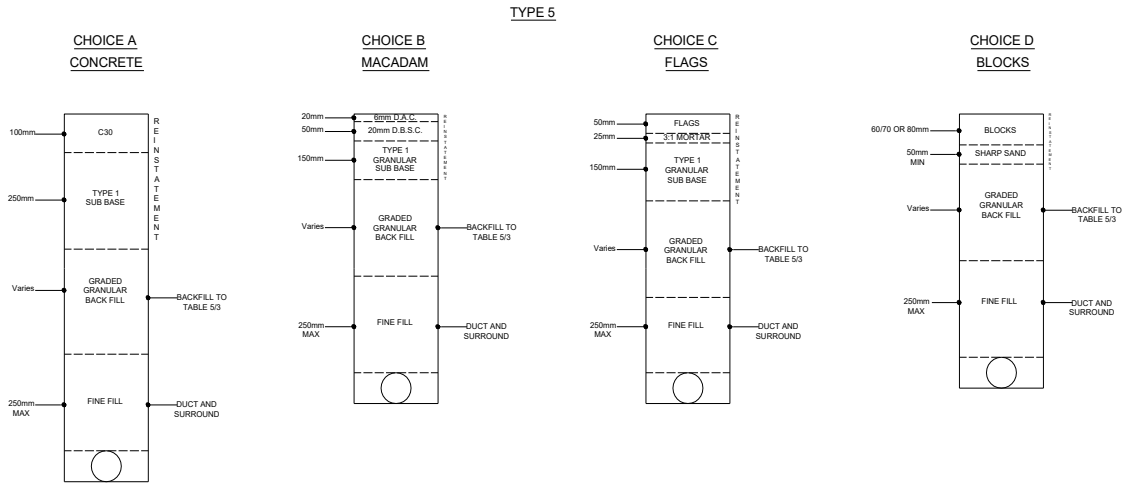

The vertical faces of the adjoining road surfacing must be treated with an approved bitumastic material before laying the wearing course. On new installations, neither the apparatus nor the fine fill may encroach into the sub base.

APPENDIX 12/1 – TRAFFIC SIGNS - GENERAL

1. TRAFFIC SIGN POSTS AND PLATES

e) Posts shall be wide based circular to dimensions specified by the Engineer and comply with the requirements of B.S. 4848 Part 2.

f) Sign posts shall be manufactured from galvanised steel to B.S. 5649 Part 3 and shall be protected in accordance with Appendix 19/3.

g) All posts shall have hammer-in external fit PVC post caps to prevent ingress of water.

h) Foundations may be constructed in two parts:

i) Up to socket bases (this maybe either a pre-cast concrete slab of the required thickness or be cast insitu.

ii) Remaining Foundation; Providing that the requirements of Clause 2602 are met.

i) Foundations may be circular in plan providing that:

i) the diameter is not less than the length (y) for the equivalent rectangular foundation and

ii) The total volume of the cylindrical foundation is not less than the volume of the equivalent rectangular foundation.

j) Erection of posts shall comply with the requirements of Clause 1208 and drawings forming part of this Contract.

k) For type M12 & M12E assemblies post spacing shall be specified by the Engineer.

l) Supplementary plates shall not be considered for the purpose of the post and foundation design unless the total are of such places exceeds $0.3m^2$ after which they must be considered to be an additional sign of height (h) for post foundation design.

2. SIGN FACE CONSTRUCTION DETAILS

a) Extruded aluminium channels for use as backing bars to comply with BS1474 and dyed grey wall thickness of extrusion to be 2.5mm nominal.

b) Channels to be affixed to sign face without puncturing sign face material BSEN 12899-2 : 2007.

c) Signs to be attached to posts either by stainless steel channel clips or stainless steel banding, applied as per manufacturer's instructions. Signs are to be attached to posts at each incidence of post and channel.

d) Clips to be manufactured from AIS1304 stainless steel alloy to BS970 and attached to channel with 13mm square headed M8 AISI 304 alloy bolts, tightened to a torque load of 1.33×10^4 Kgf/m^2.

e) Banding to be manufactured from type 201 stainless steel to BS970 0.76mm thick, 13mm wide buckles and other fixing to be of type 201 alloy.

f) Vertical spacing of horizontal backing bars shall not exceed 600mm. All signs shall have a minimum of two horizontal bars.

g) Rectangular signs exceeding 600mm vertically shall be provided with vertical backing bars along each vertical edge.

h) On rectangular signs not exceeding 1500mm overall width when erected on one post, 2300mm width on two posts or 3000mm width on three posts, horizontal backing bars shall be minimum, and the vertical small. Signs with widths exceeding these values shall be provided with large horizontal bars and medium vertical bars. Signs with a width of less than 600mm shall be provided with small horizontal backing bars.

i) Sign faces shall be constructed from a single sheet of approved material in accordance with clause 1205. If vertical joints are necessary they shall be constructed by means of a strip of approved material 50mm wide fixed along the entire length of the joint in a manner that does not puncture the sign plate in accordance with paragraph 3 above. Horizontal joints shall be constructed in accordance with the channel manufacturer's instructions.

j) With regard to flag type signs Paragraph 9 applies, except that no vertical backing bars are required. Horizontal bars shall terminate no more than the specified distance from sign edges (see drawing No: SL/CD0006 A).

k) All sign faces shall be constructed from approved sheet material to BS EN 12899-1, and the rear painted medium grey to 18B21 of BS4800.

l) Facing materials shall comply with BS EN 12899-1 : 2007 or BS 8408 (for microprismatic) : 2005 and the Department of Transport TA/19/81 and comply with the class of reflectivity specified in Appendix 12/1.

3. LARGE BASE TRAFFIC SIGN POSTS SHALL:-

a) have a minimum base section of 168mm diameter which must be turned/ forged/swaged to the small diameter. Cones formed from sheet steel and welded to both sections will not be accepted.

b) Be provided with an external fit P.V.C post cap to prevent the ingress of water.

c) Have a minimum door opening of 450mm long by 125mm wide.

d) Be installed with the door opening as detailed below:-

POST POSITION	-	DOOR POSITION
Back of footpath	-	Facing road
Near kerb edge	-	Facing away from oncoming traffic
Centre of central reserve	-	Facing oncoming traffic in a consistent direction as shown on the drawings
Near edge of central reserve	-	Facing away from oncoming traffic or facing distant side of reserve in a consistent direction as shown on the drawings
Grass verge	-	Facing away from road

e) Be provided with location marks for inspection and maintenance on the post after erection as follows:-

APPENDIX 12/1 (CONT'D) – TRAFFIC SIGNS – GENERAL

i) Lit Traffic Posts mounted in the central reserve are to have 75mm high numbering on both sides of the post, each number is to face the oncoming traffic at an angle of approximately 45°.

ii) Verge mounted lit Traffic Sign Posts are to have 50mm high numbering on one side of the post, facing the oncoming traffic.

iii) The numbering shall be in accordance with the lit Traffic Sign Column reference numbers shown on the drawings. The numbers shall be BLACK characters on a WHITE background extending to 25mm beyond any character in any direction, 1.8 Metres above adjacent ground level. The colour of the characters and/or background may be varied by the Engineer, by written instruction.

f) Each large base post shall be earthed with an 8mm (minimum) diameter earth terminal with two plain washers and nuts, all of which shall be manufactured from brass. The earth stud shall be so positioned as to be readily accessible through the door opening.

4. LARGE BASE POST DOORS

a) Posts are to be provided with weatherproof single doors, each with a tamper proof locking device.

b) Door openings and Columns shall be free from irregularities or burrs.

c) Except for doors which are required to be captive, all doors are to be interchangeable between similar types of posts without adjustment.

d) The number of door keys supplied shall be 10% of the number of posts erected subject to a minimum of three keys.

LIT TRAFFIC SIGN EXTERNAL LUMINAIRES SCHEDULE

The Client shall provide in the table below brief details of the preferred equipment and of an alternative for the preferred equipment which the Contractor proposes to supply under the terms of the Contract.

The Client shall provide a detailed Scope Document of the preferred and alternative equipment with the completed Tender and shall provide samples of the equipment if requested by the Engineer.

The completed Appendix must be returned with the Tender Document.

External Luminaires Type	Lamp				PREFERRED EQUIPMENT		ALTERNATIVE OFFERED	
	Type	Wattage	No:	Configuration	Manufacturer	Model	Manufacturer	Model
					TMP Reddilight Portland Glasdon			

APPENDIX 12/1 (CONT'D) – TRAFFIC SIGNS – GENERAL

LED Lit Traffic Sign External Luminaires shall:-

a) comply with BS 12899:2007 and Chapters 11 and 13 of the Traffic Signs Regulations and General Directions, 2002 and shall comply in all aspects with BS 12899-1:2007 Categories 1 & 2 if Paragraph 8.2 (Mean Illuminance).

b) Be constructed from cast or extruded aluminium in accordance with BS 12899-1:2007 Section 4.2.1 (e) and (g). The use of external cast hinges will not be allowed with preference to be given to luminaires with full length hinges. Luminaire Type A and B shall be of one piece construction the enclosure of which shall mount directly to the post without the need for a separate tubular or similar support bracket.

c) Have a removable reflector of gauge not less than 1.2mm with an anodic coating complying with BS 1615 1972, of uniform high specular finish free from grain and cloudy areas.

d) Be provided with a variety of support systems to provide the correct optical performance and to allow for single and back to back fixing arrangements.

e) The external surfaces of the luminaire body shall be protected by a paint system, etched primed and painted thermosetting polyester powder coating minimum film thickness 150 microns final finish stove grey.

f) Have all glazing panels manufactured from 3mm polycarbonate and fitted to the luminaire by means of a suitable gasket, which provided all round support to the glazing panel.

g) Have a degree of protection rating IP56 to BS EN 60529.

h) Post top mounted back to back luminaires shall preferably be manufactured as a one piece body into which all electrical components and glazing panels are fitted.

i) Be supplied complete with a one piece miniature encapsulated photo cell rated at 35/18 Lux and comply with the requirements of Appendix 14/4.

APPENDIX 12/1 (CONT'D) – TRAFFIC SIGNS – GENERAL

LIT BOLLARD SCHEDULE

The Contractor shall provide in the table below brief details of the preferred equipment and of an alternative for the preferred equipment which the Contractor proposes to supply under the terms of the Contract.

The Contractor shall provide a detailed Scope Document of the preferred and alternative equipment with the completed Tender and shall provide samples of the equipment if requested by the Engineer.

The completed Appendix must be returned with the Tender Document.

Aspect		Material	Lamp			PREFERRED EQUIPMENT		ALTERNATIVE OFFERED	
Size	No:		Type	Wattage	No:	Manufacturer	Model	Manufacturer	Model
270		Plastic	LED	3		Pudsey Diamond	Solaboll		
			Non lit	0		Pudsey Diamond	Visabolll		

Lit Traffic Bollards shall be provided with a location marks for inspection and maintenance on the post after erection as follows:-

i) Lit Traffic Bollards are to have 50mm high numbering on an aspect which faces oncoming traffic.

ii) The numbering shall be in accordance with the Lit Traffic Bollard reference numbers shown on the drawings. The numbers shall be BLACK characters applied directly to the aspect 0.5 Metres above adjacent ground level.

Flexible Base Lit Bollards

a) all illuminated panels shall conform with the appropriate diagrams referred to in the Traffic Signs Regulations and General Directions, 2002, insofar as pattern and colour are concerned. The Bollard shall be suitable for 1, 2, 3 and 4 aspects when the prescribed sign is 270mm diameter and 1 aspect when the sign is 600mm diameter.

b) The body shall be rotationally moulded U.V stabilised RE-FLEX and the sign face(s) and panels shall form an integral part of the moulding. All external and internal surfaces shall have a smooth finish to facilitate cleaning and shall be resistant to abrasion. The body shall be strengthened with a steel or aluminium liner instead into the base plinth.

c) The base section shall be constructed from either diecast LM6-M with stainless steel hinges

d) The Bollard base shall be suitable for bolting down using 4 no. M10 austenitic stainless steel "J" bolts, nuts and washers to BS EN 3506-2:1998 at fixing centres in accordance with BS 12899-1:2007.

APPENDIX 12/1 (CONT'D) – TRAFFIC SIGNS – GENERAL

e) Cable access shall be through the rear of the base and shall be sealed by either:-

i) heat shrinkable sleeving
ii) cold pour compound
iii) cable glands

f) The base unit shall have a degree of protection rating IP67 to BS EN 60529.

g) The body shall be attached to be base by means of nylon or brass M10 bolts or shear pins.

h) The service cut out shall be incorporated into the base section and together with all wiring in the base section shall be covered by a removable diecast LM6 or hot dipped galvanised 10 swg sheet steel lid incorporating a 3mm clear polycarbonate glazing panel. The lid shall be attached to the base unit by means of 4 no. M10 austenitic stainless steel nut bolts and washers to BS EN 3506-2:1998.

i) The base section shall be common to all Bollards offered.

j) The gear tray/lighting unit shall be incorporated into the base unit and shall be removable for maintenance. The gear tray/lighting unit shall be provided with a means of electrical isolating and/or disconnecting and shall incorporate LED of suitable size to illuminate the aspects in accordance with BS 12899-2:2007 Table 1. Control gear for the lamps shall be securely attached to the gear tray/lighting unit and shall be independent and separately fused to enable one lamp to operate in the event of the failure of the other circuit. All control gear shall be terminated in screw type terminals and the lamps and control gear or LED and driver. shall be suitable for operation on 220 to 250 volts, 50 Hertz A.C (or low/extra low voltage for LED only)

k) The Contractor shall clearly state the number, wattage and configuration of the lamps used to meet the requirements of Table 1 of BS 12899-2:2007.

l) To be fitted with 35 lux on and 18 lux off mini photo electric control.

APPENDIX 12/70 - MAINTENANCE OF TRAFFIC SIGNS, BOLLARDS AND BEACONS

1. SCHEDULE OF LIT TRAFFIC SIGNS, BOLLARDS AND BEACONS

(a) Details of the Schedules forming part of Appendix 12/70 will form part of the Contract.

(b) The 'Schedule of Lit Traffic Signs, Bollards and Beacons' is a summary of the main inventory of illuminated Traffic Signs, Bollards and Beacons and is for information only. Full schedules will be made available to the successful Contractor.

(c) The information on the main inventory is constantly updated from information supplied by the maintenance Contractor and the DNO and regular updates of the inventory schedules will be supplied to the Contractor.

(d) Routine Maintenance Lists will be supplied on a monthly basis one month before the programmed works are to be carried out and the lists will clearly identify those Illuminated Traffic Signs, Bollards and Beacons to be maintained. The Contractor will repair any outages.

2. RECORD OF EQUIPMENT INSTALLED

(a) A comprehensive survey has been carried out to record all Lit Traffic Signs, Bollard and Beacon equipment owned and operated by the Client.

(b) The Contractor shall be responsible for providing "As Built" plans and Schematics for all changes and/or additions to the Lit Traffic Signs, Bollards and Beacons as they occur, and also updating the Client's Asset Register on the mobile device.

(c) Lit Traffic Sign, Bollard and Beacon Data shall be updated on the Asset Register for all:-

New Units
Removed Units
Resited Units
Changes to - Posts, brackets, lamp type and/or wattage, luminaires, controls, burning hours, supply, numbering.

(d) The Contractor shall notify the Engineer within 5 working days of units which are ready to be disconnected or require servicing.

(e) The computer inventory can be interrogated to produce summaries under various headings for all information contained on the computer. This information will be available from the Engineer on request.

3. DATA VERIFICATION

(a) It is conceivable that some information supplied to the Contractor may be incorrect, e.g. lamp type and/or burning hours, or that some units are not recorded on the existing records.

(b) The Contractor shall at each routine maintenance operation verify the data supplied by the Engineer and update the Asset Register via the mobile device with any changes.

APPENDIX 12/70 (CONT'D) - ROUTINE MAINTENANCE OF TRAFFIC SIGNS, BOLLARDS AND BEACONS

4. DATA COLLECTION

(a) The Engineer may instruct the Contractor to undertake additional data collection at the specified dayworks rate on the mobile device.

(b) A cable schematic of each individual cable network showing each individual Lit Traffic Sign, Lit Traffic Bollard and Street Lighting unit will also be produced by the Contractor.

5. ISSUING OF INSTRUCTIONS TO THE CONTRACTOR (WORKS ORDERS)

(a) The Engineer will issue the Contractor with a Works Order contained in Appendix 12/71 for routine maintenance programmes.

(c) The Engineer will issue the Contractor with a Works Order contained in Appendix 12/71 for Unscheduled Maintenance on the day of public report or the day following Night Patrol Inspection

(c) On completion of the operations listed on the Works Order the Contractor shall return the signed and dated Works Order to the Engineer listing any additional operation numbers for labour and/or materials used.

(d) The completed Works Order will be the basis of payment in accordance the Conditions of Contract.

6. CONTRACTOR RESPONSE TIME

ACTIVITY	ACTION TO BE TAKEN BY CONTRACTOR
Unscheduled Repairs	Return the Works Order to the Engineer within 5 working days of the date of issue
Routine Maintenance	Return the Works Order to the Engineer within 30 working days of the works being issued.

APPENDIX 12/70 (CONT'D) - ROUTINE MAINTENANCE OF TRAFFIC SIGNS, BOLLARDS AND BEACONS

7. CLASSIFICATION OF THE STRUCTURAL CONDITION OF LIT TRAFFIC SIGNS, BOLLARDS AND BEACONS

(a) The structural condition of each Lit Traffic Sign, Bollard and Beacon shall be recorded on the mobile device by the Contractor while making the routine or unscheduled maintenance visit. Please note this activity is a 'Visual' Condition Survey only.

(a) The structural classification shall be as specified in the Contract and as shown on Drawing Nos: SL/CD0033 A, SL/CD0034 A and SL/CD0035 A.

Client's EXISTING APPARATUS

SCHEDULE OF LIT SIGNS

Sign Type	Quantity
LIT SIGN – 0.01m – 0.99m	1739
LIT SIGN – 1.00m – 1.99m	24
LIT SIGN – 2.00m – 3.99m	6
LIT SIGN – 4.00m – 9.99m	2
LIT SIGN – 10.00m – 25.00m	2
LIT / NON LIT BOLLARD	238 / 720
BELISHA BEACON / CENTRE ISLAND BEACON	139 / 70
SCHOOL CROSSING PATROL FLASHERS	54

APPENDIX 12/71 - MAINTENANCE OF TRAFFIC SIGNS, BOLLARDS AND BEACONS

1. The Contractor shall comply fully with the requirements of Clause 1 to 3 of Appendix 12/70 in respect of all works undertaken as additional maintenance of Traffic Signs.

CONTRACTOR RESPONSE TIMES

ACTIVITY	ACTION TO BE TAKEN BY CONTRACTOR
Electrical Test	Inspect and test all cable networks which are the responsibility of the Engineer in accordance with BS7671 and return the Works Order to the Engineer within 30 working days of the works being issued.
DNO Fault	Notify the Engineer by email for an Electrical Service Fault within 2 working days
Standby Callout	Notify the Engineer on the Contractor Callout form by email, by 08:30 hours the following day. If it is following an Road Traffic Collison (RTC). and requires DNO attendance to disconnect, notify the Engineer by telephone immediately during **Normal Working Hours** , or the Client's Security Service out of **Normal Working Hours.**
Traffic Sign Erection/Removal	Update the Client's Asset Register with any changes on the mobile device within 5 working days

2. ISSUING OF INSTRUCTIONS TO THE CONTRACTOR (WORKS ORDERS)

(a) The Engineer will issue the Contractor with a Works Order contained in Appendix 12/71 on a as and when required basis for additional maintenance.

(b) On completion of the operations listed on the Works Order the Contractor shall return the signed and dated Works Order to the Engineer listing any additional operation numbers for labour and/or materials used.

(c) The completed Works Order will be the basis of payment in accordance with the Conditions of Contract.

NORTH EAST LINCOLNSHIRE COUNCIL

CONTRACTOR CALLOUT FORM

Date ….. / …….. / 19…… Contractors name ……

Date of call out ….. / …….. / 19…… Time of call out …… Hours

Duration of call out …… Hours

Column/Traffic Sign/Bollard/Beacon No*: …… Road class ……

Road name ……. Town/Parish name ……

Location of Accident/Incident* ……..

Extent of Damage to Equipment …….

Extent of Emergency Work Carried Out …….....

……

Extent of further works required to rectify Accident/Incident* ……..

DNO.[1] Called Out YES/NO* Erection Team Called Out YES/NO*

Any other organisations required to attend YES/NO*

Call Out Instigated by …….

Name of driver/owner of vehicle ……

Address ……

Any Other Relevant Information ……

Attending Electricians name ……...

Signature …… Date ….. / …….. / 19……

---

1. DNO. - District Network Operator

*Delete as appropriate

NORTH EAST LINCOLNSHIRE COUNCIL – HIGHWAYS MAINTENANCE
ELECTRICAL TEST AND INSPECTION CERTIFICATE FOR INTERNAL WIRING
AND ASSOCIATED ELECTRICAL EQUIPMENT OF STREET LIGHITNG UNITS AND LIT TRAFFIC SIGNS

Parish name…… Road name…… Certificate No……

Column/Sign/Bollard. Number and Location	Visual Inspection Satisfactory? (Yes or details of fault)	Circuit Current	System Earth Type	Circuit Conductor Size	Circuit Protection			Insulation Resistance M.Ohms			Polarity Satisfactory? (yes or details of fault)	Live/earth fault loop Impedance Ohms	Any other Comments
					Fuse BS	MCB Type	Rating (Amps)	Live Earth	Neutral Earth	Live Neu -tral			

I certify that the Street Lighting unit/Lit Traffic Sign/Lit Traffic Bollard indicated above has been inspected and tested in accordance with the requirements of the Client and that the results are detailed above

Signed……. Date……

For and on behalf of……

……

WORKS ORDER (SAMPLE)

LIT TRAFFIC SIGNS / BOLLARDS / BEACONS MAINTENANCE

Ticket No: W/10098 Initials: PC Cost Code: 1SLWE

Parish Name: IMMINGHAM Parish No. 814 Invent: N

Unit No/Road: 1 STATION ROAD Road Number: U

Location/Description: FIT DOUBLE POLE ISOLATION Start year/Week: 3/04
Finish year/Week: 3/04

Operation Number	Operation Description	Unit	Quantity	Rate	Total
Ref No	Unscheduled Maintenance Of Lit Traffic Sign-Sign Size 0.01m2-0.99m2	No.	1		
Ref No	Tofco Double Pole Isolator Complete With Single Fuse Way Type E1	No.	1		
Ref No	Install double pole isolator	No.	1		
		TOTAL COST			

APPENDIX 13/1 - INFORMATION TO BE PROVIDED WHEN SPECIFYING LIGHTING COLUMNS AND BRACKETS

1. SHEET STEEL LIGHTING COLUMNS

(a) All Columns and bracket shall be manufactured from galvanised steel in accordance with BS 4360 Grades 43 and 50 or their equivalent.

(b) Shall be one piece continuously tapering and seam welded up to a height of 14 metres.

(c) All bracket arms shall have an anti-rotational device, and the Lantern spigot shall be swaged from the same length of steel.

(d) Lighting Columns and brackets manufactured from galvanised steel to BS 5649 Part 3 shall be protected in accordance with Appendix 19/1.

(e) Each Column and bracket shall carry a unique identification mark which indicates the Column manufacture, year of production and the Column and bracket data sheet reference number.

(f) Completed Data sheets in accordance with Appendix 13/2 shall be provided to the Engineer as and when requested.

(g) All Column brackets shall be of a similar style and appearance.

2. TUBULAR STEEL PAINTED LIGHTING COLUMNS

(a) Columns and Brackets shall fully comply with requirements of BS EN 40.

(b) The Columns and brackets shall be manufactured from either:-

Hot finished circular hollow sections to BS 4848: Part 2: 1991: and grade 43C or 50C to BS 4360:1990
or
Cold formed circular hollow sections without subsequent heat treatment to the dimensional requirements of BS 4848 : Part 2 : 1991 and to the chemical and mechanical properties of BS 4360 : 1990 Grade 43C or 50C. The hot finished tube feed stock material shall comply with the yield, tensile and elongation requirement given in BS 4360 : 1990 : Table 19.

(c) Columns to be swaged on a push-point bema machine and anti-rotational grooves automatically punched into the swaged section. For bracket fixing - bracket sleeve to fit over swaged shaft and fitted with 2 rows of 4 grub screws.

(d) Column base to shaft joint to be hot shrunk interference fit joint.

(e) Doors shall be lipped type oval shaped top and bottom and have a ‘Y’ shaped bar type fixing mechanism.

(f) New Columns provided shall be painted RAL 6009 Green, unless otherwise specified by the Engineer.

(g) Brackets to be produced with welded top-plate on bracket sleeve.

APPENDIX 13/1 (CONT'D) - INFORMATION TO BE PROVIDED WHEN SPECIFYING LIGHTING COLUMNS AND BRACKETS

3. LOCATION AND WARNING MARKINGS

(a) Location marks for inspection and maintenance purposes are to be provided on the Columns after erection as follows

(i) Columns mounted in the central reserve are to have 75 mm high numbering on both sides of the Columns; each number is to face the oncoming traffic at an angle of approximately 45°.

(ii) Verge mounted Columns are to have 50 mm high numbering on one side of the Columns, facing the opposite side of the carriage way.

(iii) Where Columns contain 415 volts supplies a self-adhesive label marked "**DANGER 415 VOLTS**" shall be fixed adjacent to the location mark.

(iv) The numbering shall be in accordance with the Column reference numbers shown on the drawings. The numbers shall be BLACK characters on a YELLOW background extending to 25 mm beyond any character in any direction, 1.8 Metres above adjacent ground level. The colour of the characters and/or background may be varied by the Engineer, by written instruction.

4. COLUMN DOORS

(a) Columns with separate bracket arms shall be installed with the door openings as detailed below.

COLUMN POSITION	DOOR POSITION
Back of footpath	Facing road.
Near kerb edge	Facing away from oncoming traffic.
Centre of central	Facing oncoming traffic in a consistent direction reserve as shown on the drawings.
Near edge of central reserve	Facing away from oncoming traffic or facing distant side of reserve in a consistent direction.
Grass verge	Facing away from road.

(b) Columns are to be provided with weatherproof single doors, each with a tamper proof locking device.

(c) Door openings, bracket arms and Columns shall be free from irregularities or burrs.

(d) Columns mounted on bridges or viaducts behind parapets shall have the bottom of the door opening 1.10 m above the top of the parapet plinth.

APPENDIX 13/1 (CONT'D) - INFORMATION TO BE PROVIDED WHEN SPECIFYING LIGHTING COLUMNS AND BRACKETS

(e) Stainless steel fixings or chains shall be used to hold the door captive where there is a likelihood of the door falling away i.e. lighting unit installed above datum.

(f) Except for doors which are required to be captive, all doors are to be interchangeable between similar types of Columns without adjustment.

(g) The number of door keys supplied shall be 10% of the number of Columns erected subject to a minimum of three keys.

5. COLUMN EARTHING

(a) Each Column shall be earthed with an 8 mm (minimum) diameter earth terminal with two plain washers and nuts, all of which shall be manufactured from brass. The earth stud shall be so positioned as to be readily accessible through the door opening and an equivalent type fixing shall be applied to the door of the Column.

6. QUALITY ASSURANCE

(a) All lighting Columns supplied under this tender shall be manufactured in accordance with the procedures of ISO 9002.

APPENDIX 13/1 (CONT'D) - INFORMATION TO BE PROVIDED WHEN SPECIFYING LIGHTING COLUMNS AND BRACKETS

COLUMN HEIGHT (m)	PLANTING DEPTH	MINIMUM DOOR OPENING		COLUMN TYPE	Terrain Category	Rationalised Wind Loading from BS EN 40	LUMINAIRE WEIGHT	SPIGOT DIMENSIONS			LUMINAIRE WIND AREA	MINIMUM BASE COMPARTMENT SIZE		
		HEIGHT (mm)	WIDTH (mm)					LENGTH (mm)	O/D (mm)	INCLINE (Deg)	ELEVATION (m2)	HEIGHT (mm)	WIDTH (mm)	DEPTH (mm)
5	Defined by Column Manufacturer	500	100	SIDE ENTRY POST TOP	III III	Light	6.0 6.0	100 76	42 76	10	0.10 0.15	600 600	110 110	100 100
6	Defined by Column Manufacturer	500	100	SIDE ENTRY POST TOP	III III	Light	6.0 10.0	100 76	42 75	10	0.10 0.15	600 600	120 120	110 110
8	Defined by Column Manufacturer	600	115	SIDE ENTRY POST TOP	II II	Light	16.0 16.0	100 76	42 76	5	0.16 0.16	600 600	120 120	110 120
10	Defined by Column Manufacturer	600	115	SIDE ENTRY POST TOP	II II	Light	18.0 18.0	100 76	42 76	5	0.20 0.20	600 600	120 120	120 120
12	Defined by Column Manufacturer	600	115	SIDE ENTRY POST TOP	II II	Light	20.0 20.0	100 76	42 76	5	0.27 0.27	600 600	120 120	120 120

APPENDIX 13/1 (CONT'D) - INFORMATION TO BE PROVIDED WHEN SPECIFYING LIGHTING COLUMNS AND BRACKETS

COLUMN AND BRACKET SCHEDULE

The Contractor shall provide in the table below brief details of the preferred equipment and of an alternative for the preferred equipment which the Contractor proposes to supply under the terms of the Contract.

The Contractor shall provide a detailed Scope Document of the preferred and alternative equipment with the completed Tender and shall provide samples of the equipment if requested by the Engineer

The completed appendix must be returned with the Tender Document.

1. Sheet Steel Columns

COLUMN		BRACKET ARM		PREFERRED EQUIPMENT		ALTERNATIVE OFFERED	
Height	Type	Type	Projection	Manufacturer	Model	Manufacturer	Model
5	Sheet Steel	Post Top	Nil	Fabrikat			
6	Sheet Steel	Post Top	Nil				
8	Sheet Steel	Post Top	Nil				
10	Sheet Steel	Post Top	Nil				
12	Sheet Steel	Post Top	Nil				
5	Sheet Steel	Single	0.5				
6	Sheet Steel	Single	0.5				
8	Sheet Steel	Single	0.5 – 1.5				
		Double	0.5 – 1.5				
10	Sheet Steel	Single	0.5 – 2.0				
		Double	0.5 – 2.0				
12	Sheet Steel	Single	0.5 – 2.5				
		Double	0.5 – 2.0				
5	Sheet Steel Hinged	Post Top	Nil				
6	Sheet Steel Hinged	Post Top	Nil				
5	Sheet Steel Hinged	Single	0.5				
6	Sheet Steel Hinged	Single	0.5				

APPENDIX 13/1 (CONT'D) - INFORMATION TO BE PROVIDED WHEN SPECIFYING LIGHTING COLUMNS AND BRACKETS

COLUMN AND BRACKET SCHEDULE

The Contractor shall provide in the table below brief details of the preferred equipment and of an alternative for the preferred equipment which the Contractor proposes to supply under the terms of the Contract.

The Contractor shall provide a detailed Scope Document of the preferred and alternative equipment with the completed Tender and shall provide samples of the equipment if requested by the Engineer.
z
The completed appendix must be returned with the Tender Document.

2. Tubular Steel Painted Columns

COLUMN		BRACKET ARM		PREFERRED EQUIPMENT		ALTERNATIVE OFFERED	
Height	Type	Type	Projection	Manufacturer	Model	Manufacturer	Model
5	Steel	Post Top	Nil	Fabrikat			
6	Steel	Post Top	Nil				
8	Steel	Post Top	Nil				
10	Steel	Post Top	Nil				
12	Steel	Post Top	Nil				
5	Steel	Single	0.5				
6	Steel	Single	0.5				
8	Steel	Single	0.5 – 1.5				
		Double	0.5 – 1.5				
10	Steel	Single	0.5 – 2.0				
		Double	0.5 – 2.0				
12	Steel	Single	0.5 – 2.5				
		Double	0.5 – 2.0				
5	Steel Hinged	Post Top	Nil	Pudsey Diamond			
6	Steel Hinged	Post Top	Nil				
5	Steel Hinged	Single	0.5				
6	Steel Hinged	Single	0.5				

APPENDIX 13/70 – MAINTENANCE OF STREET LIGHTING UNITS

1. SCHEDULE OF LIGHTING POINTS

(a) Details of the Schedules forming part of Appendix 13/70 will form part of the Contract.

(b) The 'Schedule of Lighting Points' is a summary of the main inventory of lighting points and is for information only. Full schedules will be made available to the successful Contractor.

(c) The information on the main inventory is constantly updated from information supplied by the maintenance Contractor and the DNO and regular updates of the inventory schedules will be supplied by the Contractor.

2. RECORD OF EQUIPMENT INSTALLED

(a) A comprehensive survey has been carried out to record all street lighting equipment owned and operated by the Client.

(b) Records are held in the form of a computer inventory.

(c) The Contractor shall be responsible for updating the computer inventory via the mobile device, and providing "As Built" plans and Schematics for all changes and/or additions to the street lighting systems as they occur.

(d) The Contractor shall notify the Engineer within 5 working days of units which are ready to be disconnected or require servicing.

(e) The computer inventory can be interrogated to produce summaries under various headings for all information contained on the computer.

3. DATA VERIFICATION

The contractor shall at each maintenance operation verify the data supplied by the Engineer and update the Asset Register via the mobile device with any changes.

4. DATA COLLECTION

(a) The Engineer may instruct the Contractor to undertake any over and above data collection at the specified dayworks rate on the mobile device.

(b) A cable schematic of each individual cable network showing each individual Lit Traffic Sign, Lit Traffic Bollard and Street Lighting unit will also be produced by the Contractor.

5. ISSUING OF INSTRUCTIONS TO THE CONTRACTOR (WORKS ORDERS)

(a) The Engineer will issue the Contractor with a Works Order contained in Appendix 13/71 on a weekly basis for unscheduled repairs, and/or maintenance programmes.

(b) On completion of the operations listed on the Works Order the Contractor shall return the signed and dated Works Order to the Engineer listing any additional operation numbers for labour and/or materials used.

(c) The completed Works Order will be the basis of payment in accordance with the Conditions of Contract.

6. CONTRACTOR RESPONSE TIME

ACTIVITY	ACTION TO BE TAKEN BY CONTRACTOR
Unscheduled Repairs	Return the Works Order to the Engineer within 5 working days of the date of issue

7. CLASSIFICATION OF THE STRUCTURAL CONDITON OF STREET LIGHTING COLUMS

(a) The structural condition of each street lighting Column shall be recorded by the Contractor on the Works Order during every visit when making the maintenance visit and updating the Asset Register via the mobile device. Please note this activity is a 'Visual' Condition Survey only

(b) The structural classification shall be as specified in the Contract and as shown on Drawing Nos: SL/CD0030 A, SL/CD0031 A and SL/CD0032 A.

Client's EXISTING APPARATUS

SCHEDULE OF LIGHTING POINTS

Mounting Height (m)	Lamp Type	Lamp Wattage	Quantity
2.5	SON/T	70	4
3	MCF/U	8	30
3	MCF/U	65	6
3	PL-L	36	12
3	PL-L	55	6
3	PL-S	11	2
4	LED	16	11
4	LED	19	17
4	LED	28	18
4	LED	30	21
4	2D	21	10
4	MBF/U	125	4
5	LED	10	472
5	LED	19	2422
5	LED	21	25
5	LED	26	2

5	LED	28	666
5	LED	30	103
5	LED	35	9
5	LED	40	77
5	LED	41	2
5	LED	47	2
5	LED	50	2
5	LED	52	6
5	LED	64	5
5	LED	79	1
5	LED	104	4
5	LED GEAR TRAYS	27	10
5	LED GEAR TRAYS	39	2
5	2D	21	1
5	MCF/U	8	16
5	MCF/U	11	1
5	SON/T	50	4
6	LED	10	439
6	LED	16	2
6	LED	17	9
6	LED	19	3619
6	LED	21	191
6	LED	25	22
6	LED	26	73
6	LED	27	8
6	LED	28	4038
6	LED	29	12
6	LED	30	171
6	LED	40	823
6	LED	41	43
6	LED	52	112
6	LED	59	11
6	LED	64	58
6	LED	79	6
6	LED	80	9
6	LED	104	8
6	LED GEAR TRAYS	27	5
6	PL-S	18	2
6	SOX-E	36	1
6	STREETWISE	50	2
7	LED	40	4
7	CDM-TT	100	6
8	LED	10	3
8	LED	19	29
8	LED	25	1
8	LED	26	5
8	LED	28	40

8	LED	30	6
8	LED	32	6
8	LED	40	476
8	LED	41	34
8	LED	50	55
8	LED	52	398
8	LED	60	11
8	LED	62	46
8	LED	64	746
8	LED	78	31
8	LED	79	651
8	LED	80	3
8	LED	104	340
8	LED	277	5
8	LED GEAR TRAYS	39	10
8	CMH	150	16
8	H/P SODIUM	150	1
8	SON/T	70	9
8	SON/T	100	2
8	SON/T	150	25
8	SON/T	250	1
8	SOX-E	66	3
9	LED	50	2
9	LED	64	6
10	LED	28	1
10	LED	40	21
10	LED	41	5
10	LED	50	2
10	LED	52	97
10	LED	60	1
10	LED	62	16
10	LED	64	226
10	LED	78	16
10	LED	79	651
10	LED	98	69
10	LED	102	24
10	LED	104	1304
10	LED	113	4
10	LED	139	38
10	LED	163	13
10	LED	277	8
10	CMH	150	10
10	H/P SODIUM	150	1
10	SON/T	150	1
12	LED	40	2
12	LED	43	4
12	LED	52	6

12	LED	60	6
12	LED	62	2
12	LED	64	14
12	LED	78	2
12	LED	79	36
12	LED	104	920
12	LED	113	3
12	LED	136	2
12	LED	163	3
12	LED	277	3
12	SON/T	250	35
13	LED	104	2
14	LED	79	1
18	LED	79	5
18	LED	104	31
18	LED	270	10
			20203

APPENDIX 13/71 – ADDITIONAL MAINTENANCE OF STREET LIGHTING UNITS

1. The Contractor shall comply fully with the requirements of Clause 1 to 3 of Appendix 13/70 in respect of all works undertaken as additional maintenance of street lighting Columns and the following.

CONTRACTOR RESPONSE TIME

ACTIVITY	ACTION TO BE TAKEN BY CONTRACTOR
Electrical Test	Inspect and test all cable networks which are the responsibility of the Engineer in accordance with BS7671 and return the Works Order to the Engineer within 30 working days of the works being issued.
DNO Fault	Notify the Engineer by telephone or email for an Electrical Service Fault within 2 hours of attendance
Standby Callout	Notify the Engineer on the Contractor Callout form by email, by 08:30 hours the following day. If it is following an RTC. and requires DNO attendance to disconnect, notify the Engineer by telephone immediately during normal working hours, or the Client's Security Service out of normal working hours.
Column Erection/Removal	Update the Client's Asset Register with any changes on the mobile device within 5 working days

2. ISSUING OF INSTRUCTION TO THE CONTRACTOR (WORKS ORDERS)

(a) The Engineer will issue the Contractor with a Works Order contained in Appendix 13/71 on a daily basis for additional maintenance.

(b) On completion of the operations listed on the Works Order the Contractor shall return the signed and dated Works Order to the Engineer listing any additional operation numbers for labour and/or materials used.

(c) The completed Works Order will be the basis of payment in accordance with the Conditions of Contract.

NORTH EAST LINCOLSHIRE COUNCIL

CONTRACTOR CALLOUT FORM

Date …../…../19…. contractors name …….

Date of call out …./…./19…..... Time of call out .....Hours

Duration of call out .....Hours

Column/Traffic Sign/Bollard No : ..... Road class .....

Road name ..... Town/Parish name .....

Location of Accident/Incident* .....

Extent of Damage to Equipment.....

Extent of Emergency Work Carried Out .....

.....

Extent of further works required to rectify Accident/Incident*.....

DNO., Called Out YES/NO* Erection Team Called Out YES/NO*

Any other organisations required to attend YES/NO*

Call Out Instigated by.....

Name of driver/owner of vehicle .....

Address.....

Any Other Relevant Information.....

.....

Attending Electricians name .....

Signature ..... Date...../..../19.....

---

1. DNO –

*Delete as appropriate Ref No: CCF

NORTH EAST LINCOLNSHIRE COUNCIL – HIGHWAYS MAINTENANCE
ELECTRICAL TEST AND INSPECTION CERTIFICATE FOR INTERNAL WIRING
AND ASSOCIATED ELECTRICAL EQUIPMENT OF STREET LIGHTING UNITS AND LIT TRAFFIC SIGNS

Column/Sign /Bollard Number and Location	Visual Inspection Satisfactory? (Yes or details of Fault)	Circuit Current	System Earth Type	Circuit Conductor Size	Circuit Protection			Insulation Resistance M. Ohms			Plarity Satisfacory? (Yes or details of Fault)	Live/Earth Fault Loop Impedance Ohms	Any Other Comments
					Fuse BS	MCB Type	Rating (Amps)	Live Earth	Neutral Earth	Live Earth			

I certify that the street lighting unit/Lit Traffic Sign/Lit Traffic Bollard indicated above have been inspected and tested in accordance with the requirements of the Client and that the results are detailed above.

Signed…… Date…….

For & on behalf of: ……..

……..

……..

WORKS ORDER (SAMPLE)

ROAD LIGHTING MAINTENANCE

Ticket No: W/10098 Initials: PC Cost Code: 1SLWE

Parish Name: IMMINGHAM Parish No. 814 Invent: N

Unit No/Road: 1 Road Number: U

Location/Description: STAINTON ROAD Start year/Week: 3/04
Finish year/Week: 3/04

Operation Number	Operation Description	Unit	Quantity	Rate	Total
Ref No	Unscheduled Maintenance Of Road Lighting Unit Up To And Including 6m Nominal Height	No.	1		
Ref No	Lamp 50w SON-T/E	No.	1		
Ref No	Install Lamp	No.	1		
		TOTAL COST			

RULES FOR WORKING IN THE VICINITY OF NORTHERN POWERGRID OWNED EQUIPMENT

1. Cut Outs

1.1 When a cut-out fuse has been removed for the purpose of work or testing on the outgoing side of a Northern Powergrid owned cut out, the live exposed phase terminal on the incoming side shall be shrouded with Northern Powergrid approved insulating material and shall so for such time as the cut out cover is removed.

1.2 Under NO circumstances shall a cut out be disconnected from the Northern Powergrid supply cable.

1.3 Northern Powergrid cut outs shall not be left unattended when Columns or the furniture housings have been removed, unless they have been protected against unauthorised interference by a substantial temporary housing suitably marked to warn of live apparatus.

1.4 Only HRC fuselinks approved by Northern Powergrid shall be used in Northern Powergrid cut-out fuse carriers.

1.5 Northern Powergrid must be notified without delay of any danger, repair requirement or suspected defect in their equipment. No attempt should be made to interfere with Northern Powergrid equipment which is damaged or suspected to be faulty.

2. **LAMPS ON OVERHEAD LINE SUPPORTS**

2.1 The initial erection of furniture and fittings on Northern Powergrid posts and supports must be carried out by Northern Powergrid staff.

2.2 Northern Powergrid must be notified without delay of any danger, repair requirement or suspected defect in their equipment. No attempt should be made to interfere with Northern Powergrid equipment which is damaged or suspected to be faulty.

2.3 Adequate earthing of metalwork of a street lighting fitting is not to be assumed and is to be regarded as live until proven otherwise.

2.4 Wood poles must be sounded and prodded for the detection of any decay before being climbed; wood poles marked with a "D" symbol or otherwise suspected to be unsound shall not be climbed by ladder or climbing irons.

2.5 No person shall work on a pole or support unless in visual range of a second person.

2.6 No metal ladder, or ladder with metal stile reinforcement, shall be used on Northern Powergrid poles or supports.

2.7 Nothing must be done to conceal or obliterate a "D" symbol on a pole.

2.8 Work must be conducted in such a manner that no part of the body, working tool or any part of the working platform is within a distance of 1.0m of any exposed overhead conductor operating at up to 650 volts. Northern Powergrid will undertake any work necessary on such installation where 1.0m clearance cannot be observed, where the bracket level is level with, or above, the overhead line.

2.9 When working on Columns in the vicinity of overhead lines operating above 650 volts, a minimum safe working clearance of 3.0m between any part of the body or tool or equipment and the overhead line must be maintained at all times. No part of working platforms used in the vicinity of overhead lines operation above 650 volts must be raised to a height greater than 1.0m below the top of the Column. The platform must be kept as close to the Column as practicable.
Where hinged Columns are installed in the vicinity of overhead lines, operatives must not ascend to the top of the Column which is in the raised position unless, on account of special circumstances, authority in writing is forst obtained.

NOTE: NO OTHER WORK OTHER THAN THAT AUTHORISED OVERLEAF WILL BE CARRIED OUT AT ANY TIME

Authority	Authorising Authority
North East Lincolnshire Council Street Lighting Section Municipal Offices Town Hall Square Grimsby DN31 1HU www.nelincs.gov.uk email – streetlighting@nelincs.gov.uk	North East Lincolnshire Council Street Lighting Section Municipal Offices Town Hall Square Grimsby DN31 1HU www.nelincs.gov.uk email – streetlighting@nelincs.gov.uk

Name of Employee:-

Appointment of Person Authorised to Work on Street Lighting and Street Furniture Services connected to Northern Powergrid Low Voltage Network	SERIAL NO: **NEL/001/R**

Having been trained for the purpose, the above named employee is hereby authorised to undertake the following categories of work in accordance with the Engineering Recommendations No: G39, and Northern Powergrid Engineering Memorandum No: ESD 13.04

AUTHORISATION TO WORK ON NORTHERN POWERGRID LOW-VOLTAGE UNDERGROUND SERVICE TERMINATIONS

1. Removal and replacement of Northern Powergrid cut-out fuse.

2. Initial Insertion of Northern Powergrid cut-out fuse and connection of Authority's wiring.

3. Disconnection and reconnection of Authority's wiring from outgoing side of Northern Powergrid cut-out.

AUTHORISATION TO WORK ON NORTHERN POWERGRID LOW-VOLTAGE OVERHEAD LINES

1. Removal and replacement of Northern Powergrid cut-out fuse.

2. Initial Insertion of Northern Powergrid cut-out fuse and connection of Authority's wiring.

3. Disconnection and reconnection of Authority's wiring from outgoing side of Northern Powergrid cut-out.

CONFIRMATION OF COMPETENCE ISSUED BY THE CONTRACTOR

I confirm that the above named person is competent to be authorised to carry out the duties listed above.

Name:- Signature:

Position:- Date:

RECEIVED BY:- (Competent Person)

Name:- Signature:

Position:- Date:

AUTHORISED BY:- (AUTHORITIES Authorising Officer)

Name:- Signature:

The AUTHORITIES Authorising Officer Date:

EXPIRY DATE: This certificate is valid until:-

A copy of this certificate SHALL be carried by the Competent Person when employed on these duties and the rules outlined in

	Appendix III MUST be adhered to during such operations.

APPENDIX 14/1 – SITE RECORDS

As-built drawings shall be produced by the Contractor on a pdf or word document for the lighting and Lit Traffic Sign installation and provided to the Engineer. These completed drawings shall be in accordance with the following :-

(a) They shall incorporate the maintenance or operating manuals for installed equipment;

(b) All apparatus subject to a public view record must be surveyed on site with the location measurements (i.e. the position of apparatus relative to features appearing on the base map) being measured and recorded to an accuracy of +/- 0.1 metre. Sufficient measurements must be taken on site to represent accurately the line of the apparatus.

(c) The site records shall include details of all road lighting Columns, Lit Traffic Sign units, Lit Traffic Bollards and Pedestrian refuge and/or Crossing Beacons.

(d) Cable schematics shall be provided for each feeder pillar/feeder Column and shall show in schematic form the following information:

i) each individual circuit;

ii) individual cable size and configuration;

iii) all Columns, Lit Traffic Signs, Lit Traffic Bollards per circuit;

iv) all Columns, Lit Traffic Signs, Lit Traffic Bollards shall be identified by their individual painted identification number/letter – all Feeder Pillars/Feeder Columns to be numbered with suffix ie “FP”.

v) All cable joints.

APPENDIX 14/3 – TEMPORARY LIGHTING

1. Existing street lighting units and lit sign units shall be fully maintained until the new installations have been commissioned as detailed in 4(i),(ii) and (iii) below except where existing units are moved or altered under the Contract.

2. Temporary lighting shall be provided where there is a delay of more than 4 hours between the removal or disconnection and re-erection or connection of any existing plant which is moved or altered under the Contract.

3. Temporary lighting to the Electricity at Work Regulations 18th Edition, and any other updated Editions that supersede the current edition and to a similar standard as the existing lighting may be provided in lieu of maintenance of the existing installation.

4. Temporary lighting shall not be removed or switched off until : -

   (i) the permanent installation is in full operation;

   (ii) an inspection has been carried out on the operation of the permanent installation not less than 24 hours or more than 7 days after commissioning;

   (iii) any adjustments, remedial work or replacements found necessary have been carried out;

   (iv) the system has been re inspected as (ii) above.

APPENDIX 14/4 – ELECTRICAL EQUIPMENT FOR ROAD LIGHTING

1. LUMINAIRES

(i) All luminaires shall have a Nema Socket in a suitable location along the canopy to accommodate the installation of a Nema photo electric cell unit.

(ii) All electrical wiring which is subject to heat shall be protected by heat insulating sleeving. No exposed wiring will be permitted within the lamp housing.

(iii) All luminaires shall have incorporated into the optical system a method by which the light distribution can be varied to optimise the width and spread of the light without recourse to the provision of additional components.

(iv) All luminaires shall have a minimum IP rating of IP65 in accordance with BS 5490

(v) All luminaires shall incorporate LED lamps and LED driver which shall be mounted within its own module and preferably separated from the lamp housing by a heat resistant screen. The control gear module shall be designed for ease of access for maintenance purposes and be completely removable for replacement.

(vi) All post top luminaires shall be so designed to allow the lamp to be burnt in the horizontal position and shall be fitted with a reflector system to provide an asymmetrical light distribution.

(vii) All luminaire bowls/shades shall be manufactured from polycarbonate or similar approved vandal resistant materials and moulded in such a manner so as to preclude high stress points.

(viii) The bodies of luminaires shall be manufactured from LM6 cast aluminium. and painted to RAL 7040 unless otherwise specified by the Engineer.

(ix) All fixing bolts and nuts shall be manufactured from austenitic stainless steel to BS EN 3506-2:1998. Similarly, all clips and hinges shall be manufactured from austenitic stainless steel, although hinges may be moulded in the same material and form an integral part of the bowl.

(x) All offered equivalent luminaires shall be equivalent in size, shape and designed such that the photometry of the Lantern provides similar light distribution characteristics of the luminaire specified.

(xi) All new luminaires shall be protected in accordance with Appendix 19/1

APPENDIX 14/4 (CONT'D) – ELECTRICAL EQUIPMENT FOR ROAD LIGHTING

2. LAMPS

(i) LED lamps shall comply with BS EN 5489

2A WARRANTY OF LAMPS
All lamps shall have the following rated and guaranteed life:

Lamp Type	Rated Life (hours)	Guaranteed Life (hours)
LED	41250	41250
MCF/U & MBF/U	8,000	4,000
PL	12,000	8,000

APPENDIX 14/4 (CONT'D) – ELECTRICAL EQUIPMENT FOR ROAD LIGHTING

3. ANCILLARY EQUIPMENT

(i) CONTROL GEAR

(a) Control gear including LED drivers shall be integrally mounted in luminaires.

(b) Maximum total circuit wattages to be in accordance with the following tables:-

Lamp Type	Circuit Wattage
LED	11
LED	21
LED	28
LED	40
LED	52
LED	64
LED	79
LED	104

APPENDIX 14/4 (CONT'D) – ELECTRICAL EQUIPMENT FOR ROAD LIGHTING

(ii) PHOTO-ELECTRIC CONTROL UNITS (PECU)

(A) Classification of P.E.C.U. shall be Class 2 according to protection against electric shock and IP54 according to degree of protection against ingress of dust and moisture.

(B) P.E.C.U. shall be suitable for use on a 230 volt 50 Hz supply and have a switching capacity of 5A minimum (inductive). The unit shall also be able to function correctly where supply voltages are reduced to 220 volts. The unit will be in general solid state with no thermal components and the detector will be a photo diode/transistor.

(C) The units shall be calibrated to provide a switch-on level of 35 lux +/- 10%. Calibration tests will be carried out at an independent testing facility on behalf of the Engineer.

Cells tested will be stabilised for 5 days before testing. The switching level of 35 lux will be maintained during the guaranteed life of the cell. The Engineer may at their discretion remove a sample of units (10 units) for use each year to confirm calibration. In the event that the sample tested fails, all units supplied of that origin will be replaced at the Contractors expense (material and labour cost) on a one for one basis.

The switch should be capable of performing not less than 6,000 operations at the rated load under normal operating conditions.

All components shall be capable of operating within the temperature range of -20 to + 70 degrees Celsius. The Contractor will be required to prove that this requirement is met.

(D) All P.E.C.U.s shall have radio and electro-magnetic interference levels in compliance with:-

(i) CISPR 22 / BS 6527 1988 / EN 50 0811 for emission levels

(ii) IEC 801-3 / EN 50 082 – 1 for immunity levels

(E) The energy consumption of the units shall be less than 0.25 watt average.

(F) The Photocell will be required to have a manufacture guarantee electrically, mechanically and photometrically for a period not less than 5 years.

(G) In addition to the information required to be stated by BS5972 Contractors shall also provide the following details for all units offered:-

(a) On/Off ratio

(b) Energy consumption

(c) Dimensions and fixing details, installation and maintenance instructions

(H) The complete P.E.C.U. should withstand a shock to a minimum of 50g.

APPENDIX 14/4 (CONT'D) – ELECTRICAL EQUIPMENT FOR ROAD LIGHTING

(I) The P.E.C.U. miniature should be unaffected by normal in-service vibrations.

(J) All photo-electric control units shall utilise technology to maintain the circuit wattage to less than 0.25 watts.

TYPES OF PECU's

(1) ONE-PART UNIT in which the photo-electric sensor and the load switching components are housed in the same enclosure, suitable for insertion into a "NEMA" type socket to obtain mechanical and electrical connection.

(2) TWO-PART UNIT in which the photo-electric sensor and the load switching components are housed in separate enclosures. The photo-electric sensor (called the "detector") hereinafter) in its housing shall be suitable for direct mounting to luminaire canopies or other equipment by means of a mechanical screwed fixing or a saw toothed rubber plug.

(3) ONE-PART MINIATURE in which the photo-electric sensor and the load switching components are housed in the same enclosure, suitable for direct mounting to luminaire canopies or other equipment by means of a mechanical screwed fixing.

(iii) FUSED CUT-OUTS

(a) Fused links shall comply with BS 88 category of duty 240AC 16 rating Class Q1

(b) The fused cutout and secondary fuse shall be fully exposed within an IP44 FR grade ABS plastic enclosure with a tracking index in excess of 500 volts.

(c) The enclosure including integral metal gland plate shall be capable of providing three modular widths and accept din-rail mounted accessories.

(d) The isolator and fuse unit shall be suitable to meet the requirement shown on drawing Nos: SL/CD0025,SL/CD0026 and SL/DC0027 A.

(e) Fuse ratings to be in accordance with the following table:-

APPENDIX 14/4 (CONT'D) – ELECTRICAL EQUIPMENT FOR ROAD LIGHTING

Lamp Type	Fuse Rating AMPS
LED	4
PL-L – PL-C	4

(iv) ISOLATION

(a) Fused links shall comply with BS 88 category of duty 240AC16 rating Class Q1.

(b) The double pole isolator and secondary fuse shall be fully enclosed within an IP44 FR grade ABS plastic enclosure with a tracking index in excess of 500 volts.

(c) The enclosure including integral metal gland plate shall be capable of providing three modular width and accept din-rail mounted accessories.

(d) The isolator and fuse unit shall be suitable to meet the requirement shown on drawing Nos: SL/CD0028 A.

APPENDIX 14/5 – ELECTRICAL EQUIPMENT FOR TRAFFIC SIGNS

1. ANCILLARY EQUIPMENT

(i) CONTROL GEAR

(a) Control gear including ballasts, ignitors, starters and capacitors shall be integrally mounted in sign luminaires.

(b) Ignitors will provide one high voltage peak pulse per cycle across the discharge tube to achieve instant ignition and upon ignition shall automatically switch out of circuit.

(c) Ignitors should incorporate a failsafe device in the event of lamp failure or open circuit.

(ii) PHOTO-ELECTRIC CONTROL UNITS (PECU)

(a) As per Appendix 14/4

(iii) FUSED CUT-OUTS

(a) As per Appendix 14/4

APPENDIX 14/70 - ELECTRICAL TEST AND INSPECTION CERTIFICATE FOR PRIVATE CABLE NETWORKS

Certificate No:…….

Parish name……

Road Name……..

Source/F-\Pillar…… Circuit……

Cable…….. System & Earth Type…….

Circuit Protection Fuse BS No:……... Rating (A) …….. Limiting Impedance ( )…...

VISUAL INSPECTION SATISFACTORY ? (Yes or Details of Fault)	
EARTH ELECTRODE RESISTANCE ('Ω)	

INSULATION RESISTANCE (M 0 TEST VOTS …….

Ph1-Ph2	Ph1-Ph3	Ph3-Ph2	Ph1-N	Ph3-N	Ph2-N	Ph1-E	Ph2-E	Ph3-E	N-E

POLARITY SATISFACTORY ? (Yes or Details of Fault)	
EARTH FAULT LOOP IMPEDANCE ('Ω) SOURCE …….. …….	REMOTE END
R.C.D. OPERATION (MSec) 0.5 x 10 ……. Io…… 5x1o	
VOLTAGE (@ FULL LOAD – Volt) SOURCE VOLTAGE……REMOTE END VOLTAGE……..VOLT DROP	
<u>COMMENTS</u>	

I certify that the private cable network at the above site has been inspected and tested in accordance with the requirements of Client and the results are detailed above.

Signed…….Date……/……/20……

For & on behalf of: ……..

APPENDIX 19/1 – PROTECTION OF STEELWORK AGAINST CORROSION

1. All new Traffic Sign Posts shall be protected against corrosion by being hot dipped galvanised in accordance with BS EN ISO 1461:1999

2. All new and/or replacement Columns and luminaires shall be protected against corrosion with the Client's paint system below.

3. The root section of the Column/post shall be further protected by TYPE G1 finish.

4. All existing steel Columns shall be protected by other parties throughout the duration of the Contract

Client's PAINT SYSTEM

Product Name:	COMPLIANT 2 PK ACRYLIC HIGH BUILD SHEEN FINISH
Reference Number:	83-line
Coating Type:	2 pack Acrylic
Typical Uses:	Iso-Cyanate-Free finish coat for structural steel. galvanised fabrications etc.
Colour:	Columns RAL 6009 – Green Lanterns RAL 7040 – Grey
Appearance of Dried Film:	Sheen
Volume Solids:	64%
VOC:	324 gms/lit
Dry film thickness:	Typical: 120 microns Range: 100-140 microns.
Drying Time at 20°C; (Will vary with temperature, air movement etc.)	Touch Dry: 2 Hour Firm Dry: 8 Hours Overcoat: 8 Hours
Surface Preparation:	Apply to clean degreased galvanised steel or other suitably pre-treated substrate (e.g. Mordant Solution)

APPENDIX 19/1 (CONT'D) – PROTECTION OF STEELWORK AGAINST CORROSION

SYSTEM TYPE "G1"

(i) External and internal surfaces

Flange mounted and rooted sheet steel Columns, overall treatment Galvanize.

(ii) External surface

Ground section, additional coats.

1st Coat: Item 155, 'T' Wash.
2nd Coat item 110, Zinc Phosphate Epoxy Primer (2 pack) AS.mdft 30um.
3rd Coat item 150, Pitch Epoxy (2 pack) AS.mdft 100um.

Minimum dry film thickness 150um.

(iii) Applications instructions.

The requirements of Clause 1914.21 need not apply for lighting Columns/posts, which remain in a shop environment after galvanizing.

'T' Wash and shop paint coats on external surfaces shall be returned on to edges and 25mm inside at ends and under base flange.

All paint coats shall be applied in the shops.

Item 110 shall be applied in shops.

Items 155, 110 and 150 shall be applied from the bottom to 150mm above ground level.

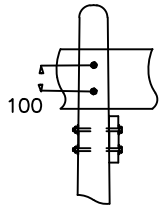

FIXING DETAILS FOR TAPERED POST

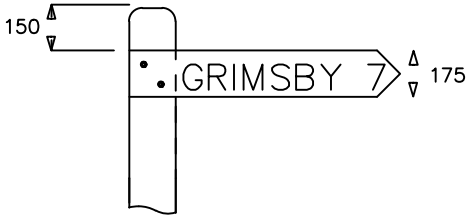

TYPE P11(suffix as applicable)

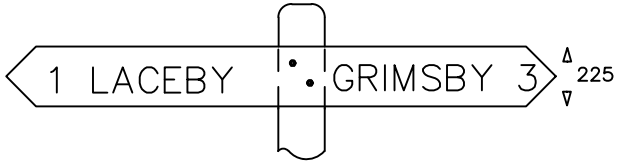

TYPE P21D(suffix as applicable)

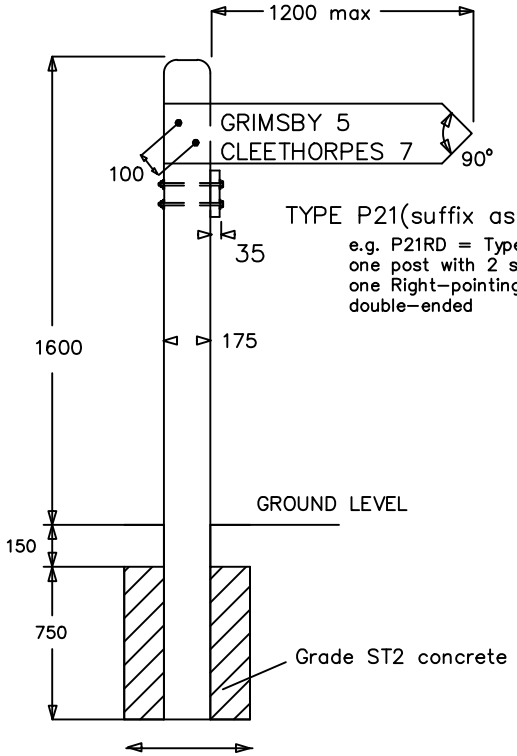

TYPE P21(suffix as applicable)

e.g. P21RD = Type P on one post with 2 signs, one Right-pointing, one double-ended

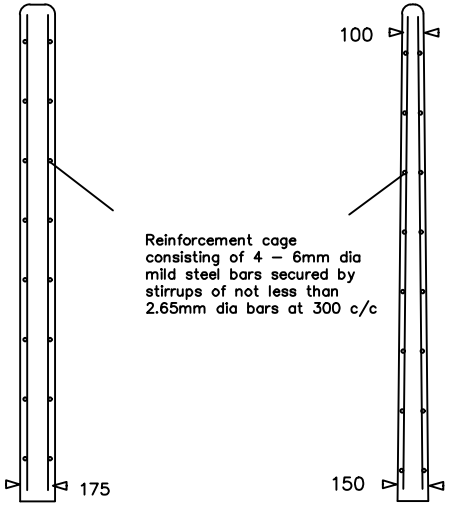

Reinforcement cage consisting of 4 – 6mm dia mild steel bars secured by stirrups of not less than 2.65mm dia bars at 300 c/c

Alternative Post Types

NOTES

1. All dimensions in millimeters unless otherwise stated.

ALTERNATIVE REQUIREMENTS	SUFFIX TO SIGN TYPE
Left–pointing	L
Right–pointing	R
Info. on both sides	H
Double–ended	D

Mapping material in this plot has been reproduced from the Ordnance Survey Digital Data with the permission of the Controller of HMSO (c). Crown Copyright Reserved 1996, Licence No 100020759
Unauthorised reproduction infringes Crown Copyright and may lead to prosecution or civil proceedings.

NORTH EAST LINCOLNSHIRE COUNCIL
www.nelincs.gov.uk

Highways and Transport

Municipal Offices, Town Hall Sq, Grimsby
DN31 1HU, North East Lincolnshire.
Tel. (01472) 313131

CLIENT: NORTH EAST LINCOLNSHIRE COUNCIL

PROJECT: TRAFFIC SIGNS

TITLE: TYPE P

DRAWN	APPROVED	FILE NAME
MDE		x:\eng-cons\design team\
FILE REF. SL\CD\0005	DATE APRIL 2025 23/5/02	DRAWING No. SL\CD\0005\A
ORIGINAL SIZE A4 (297 x 210)	SCALE N.T.S	

NOTES

1 All dimensions in millimetres unless otherwise stated.

2 References to 'Circular' Signs also include the octagonal sign to Dia. 601.1 of the Traffic Signs Regulations and General Directions 2002.

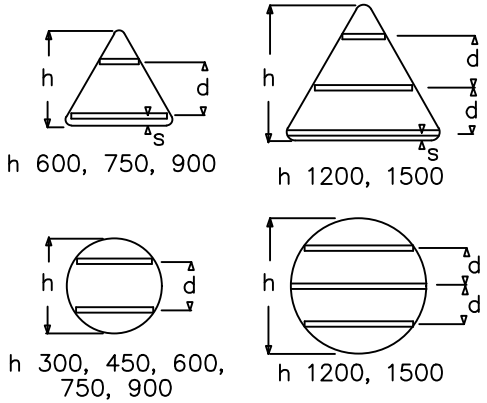

STRENGTHENING BAR REQUIREMENTS FOR TYPE M SIGNS

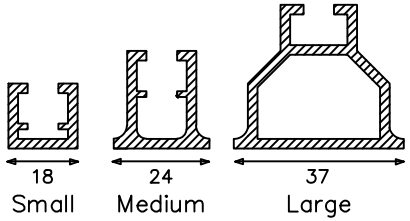

TYPICAL CHANNEL CROSS SECTIONS

TRIANGULAR

Sign Height h	300	450	600	750	900	1200	1500
No. of bars	–	–	2	2	2	3	3
Offset from horiz. edge (s)	–	–	40	60	80	100	100
Bar spacing (d)	–	–	400	400	600	400	500
Bar size (see note 3)	–	–	Med.	Med.	Med.	Large	Large

CIRCULAR

No. of bars	2	2	2	2	2	3	3
Bar spacing (d)	200	250	300	400	500	400	500
Bar size (see note 3)	Small	Small	Med.	Med.	Med.	Large	Large

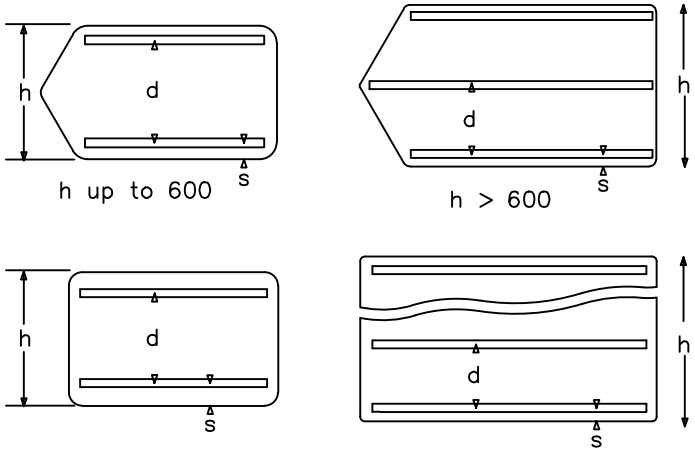

Sign Height h	Up to 600	> 600
Offset from horiz. edge (s)	25 min. 60 max.	50
Bar spacing (d)	–	600 max.
Bar size	See Appendix 12/1	

STRENGTHENING BAR REQUIREMENTS FOR TYPE S AND F SIGNS

Mapping material in this plot has been reproduced from the Ordnance Survey Digital Data with the permission of the Controller of HMSO (c). Crown Copyright Reserved 1996, Licence No 100020759
Unauthorised reproduction infringes Crown Copyright and may lead to prosecution or civil proceedings.

NORTH EAST LINCOLNSHIRE COUNCIL
www.nelincs.gov.uk

Highways and Transport
Municipal Offices, Town Hall Sq, Grimsby DN31 1HU, North East Lincolnshire.
Tel. (01472) 313131

CLIENT
NORTH EAST LINCOLNSHIRE COUNCIL

PROJECT
TRAFFIC SIGNS

TITLE
SIGN FACE CONSTRUCTION DETAILS

DRAWN	APPROVED	FILE NAME
MDE		x:\eng-cons\design team\
FILE REF. SL\CD\0006	DATE APRIL 2025	DRAWING No. SL\CD\0006\A
ORIGINAL SIZE A4 (297 x 210)	SCALE N.T.S	

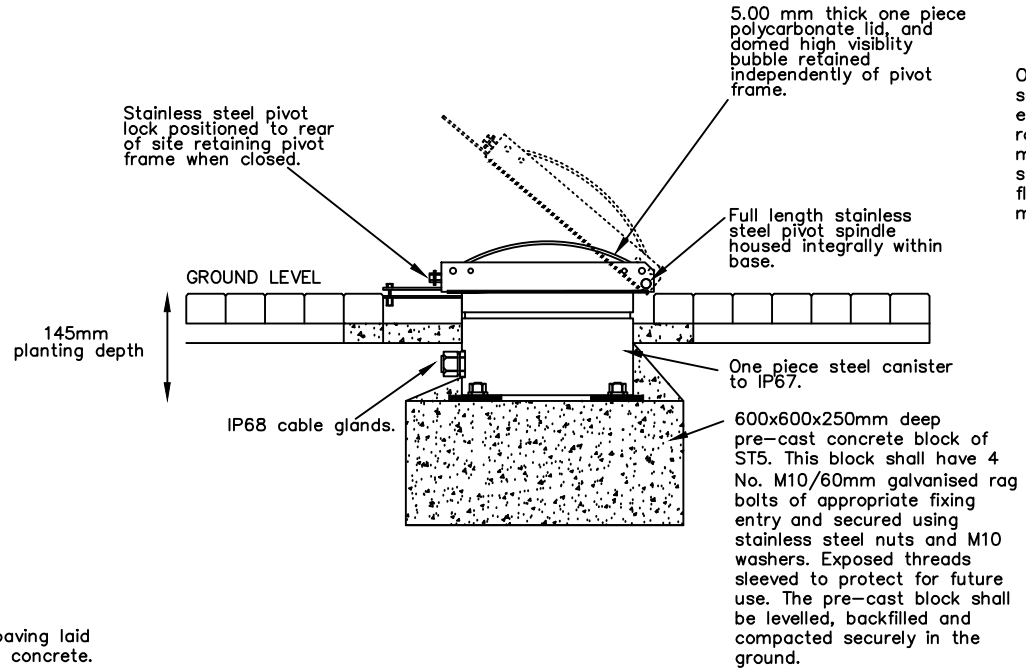

One piece bollard shell of square base section. All external corners to be radialised. The shell shall be moulded from fully U.V. stabilised, sheen finished flexible polyethylene with minimal porosity.

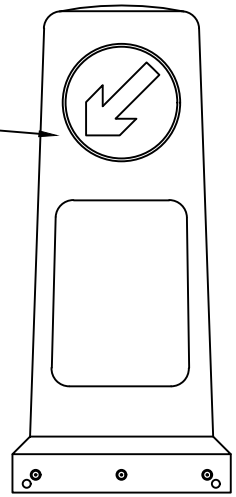

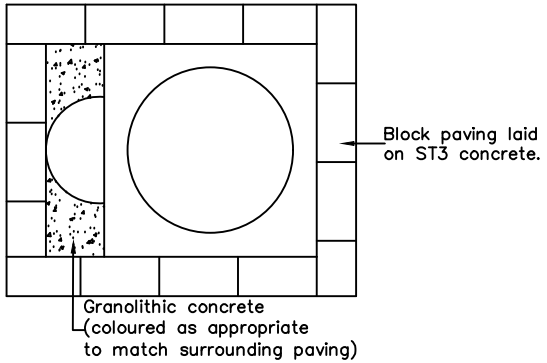

PLAN

NOTES

1. All extraneous metal work shall be earthed in accordance with Clause 1420.
2. Baselight casing, hinge and frame shall be of LM6 – Marine Grade Aluminium.

Mapping material in this plot has been reproduced from the Ordnance Survey Digital Data with the permission of the Controller of HMSO (c). Crown Copyright Reserved 1996, Licence No 100020759
Unauthorised reproduction infringes Crown Copyright and may lead to prosecution or civil proceedings.

NORTH EAST LINCOLNSHIRE COUNCIL
www.nelincs.gov.uk

Highways and Transport
Municipal Offices, Town Hall Sq, Grimsby DN31 1HU, North East Lincolnshire.
Tel. (01472) 313131

CLIENT
NORTH EAST LINCOLNSHIRE COUNCIL

PROJECT
STANDARD DETAILS – STREET LIGHTING AND TRAFFIC SIGNS

TITLE
Traffic Bollard Base Illuminated Rigid or Flexible

DRAWN	APPROVED	FILE NAME
D.Kerry		x:\eng-cons\design team\
FILE REF. SLCD0007	DATE APRIL 2025	DRAWING No. SL\CD\0007\A
ORIGINAL SIZE A4 (297 x 210)	SCALE N.T.S.	

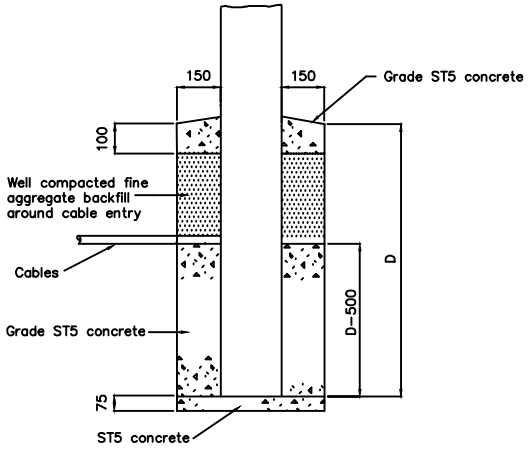

FOUNDATION TYPE 1

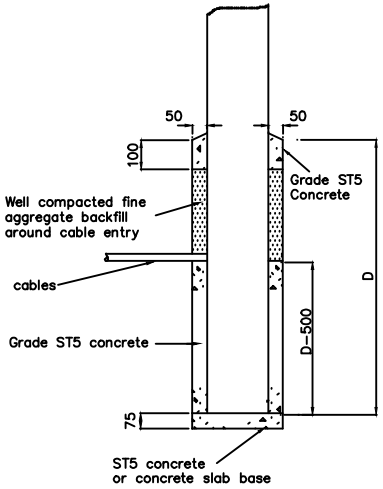

FOUNDATION TYPE 2

1. Material Specification Clauses:
   (i) Fine aggregate to BS 882 grading C or M.
2. Foundation Type 1 will be used for column height 8, 10 and 12 metres.
3. Foundation Type 2 will be used for column height 5 and 6 metres.
4. Concrete collar to be installed for columns mounted in grass verges.

Column height (H) metres	Depth (D) metres	Alternatives for (B) metres	
5	0.8	0.3	
6	1.0	0.5	0.8
8	1.2	1.0	1.5
10	1.5	2.0	2.5
12	1.7	2.0	2.5
15	2.0	2.0	2.5
18	2.0	2.0	2.5

The dimensions in the above table apply to both foundation types.

Mapping material in this plot has been reproduced from the Ordnance Survey Digital Data with the permission of the Controller of HMSO (c). Crown Copyright Reserved 1996, Licence No 100020759
Unauthorised reproduction infringes Crown Copyright and may lead to prosecution or civil proceedings.

NORTH EAST LINCOLNSHIRE COUNCIL
www.nelincs.gov.uk

Highways and Transport
Municipal Offices, Town Hall Sq, Grimsby DN31 1HU North East Lincolnshire.
Tel. (01472) 313131

PROJECT: STANDARD DETAILS – STREET LIGHTING COLUMNS AND BRACKETS

TITLE: Type 1 and 2 Foundation Details

DRAWN	APPROVED	FILE NAME
D. Kerry		x:\eng-cons\acad\standwgs
FILE REF: SLCD0009A	DATE: APRIL 2025	DRAWING No. SL\CD\0009A
ORIGINAL SIZE: A4 (210 x 297)	SCALE: N.T.S.	

CLIENT: NORTH EAST LINCOLNSHIRE COUNCIL

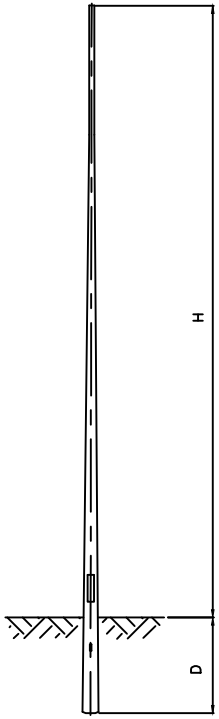

ELEVATION ON COLUMN

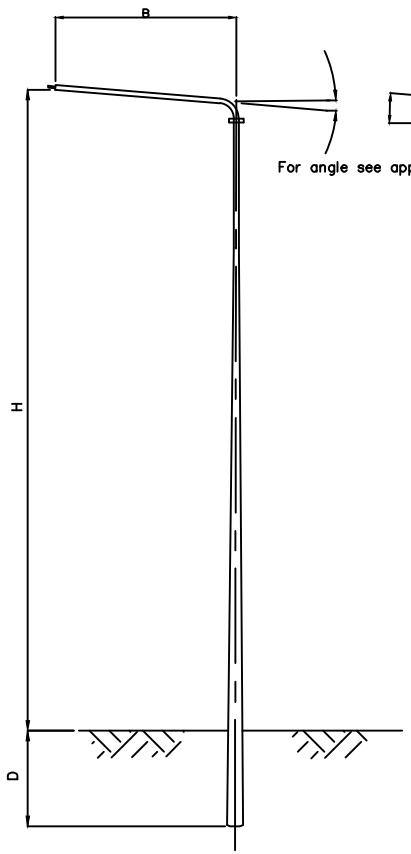

For angle see appendix 13/1

ELEVATION ON SINGLE BRACKET

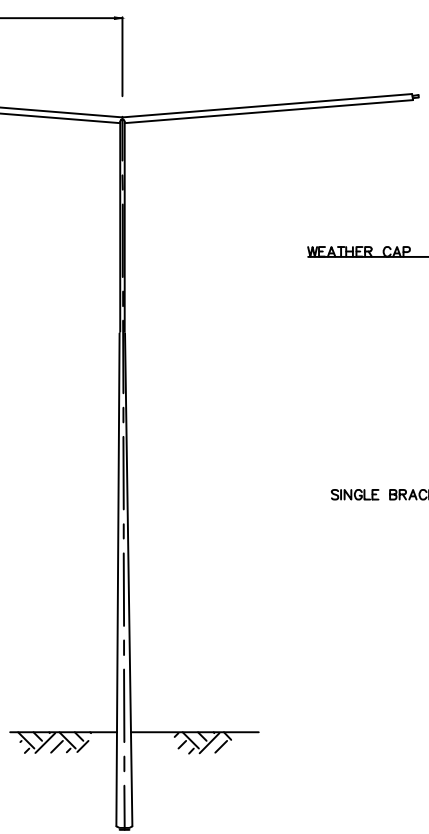

PART ELEVATION ON DOUBLE BRACKET

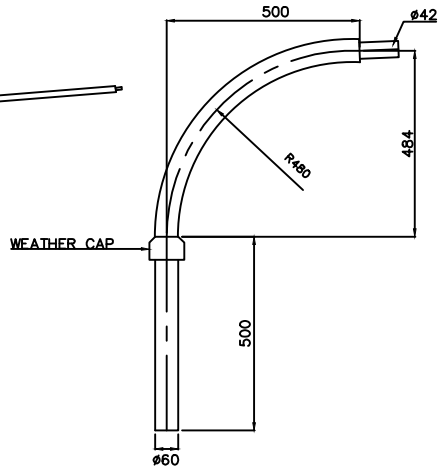

SINGLE BRACKET ARM DETAIL

NOTES

1. All dimensions in millimetres unless stated otherwise.

2. All columns shall be conical, stainless steel (AISI 201), bracket (AISI 304) and shall comply with BSEN40.

3. Foundations shall comply with Clause 1305. See Dwg. SL\CD\0009A.

4. Posts shall be erected vertically and shall be suitably braced for 3 days after backfilling to prevent movement.

Column height (H) metres	Depth (D) metres	Alternatives for (B) metres	
5	0.8	0.5	
6	1.0	0.5	0.8
8	1.2	1.0	1.5
10	1.5	2.0	2.5
12	1.7	2.0	2.5
15	2.0	2.0	2.5
18	2.0	2.0	2.5

The dimensions in the above table apply to both foundation types.

Mapping material in this plot has been reproduced from the Ordnance Survey Digital Data with the permission of the Controller of HMSO (c). Crown Copyright Reserved 1996, Licence No 100020759
Unauthorised reproduction infringes Crown Copyright and may lead to prosecution or civil proceedings.

NORTH EAST LINCOLNSHIRE COUNCIL
www.nelincs.gov.uk

Highways and Transport
Municipal Offices, Town Hall Sq, Grimsby
DN31 1HU North East Lincolnshire.
Tel. (01472) 313131

CLIENT
NORTH EAST LINCOLNSHIRE COUNCIL

PROJECT
STANDARD DETAILS – STREET LIGHTING COLUMNS AND BRACKETS

TITLE
Steel Columns

DRAWN	APPROVED	FILE NAME
D.Kerry		x:\eng-cons\design team\
FILE REF. SLCD0009	DATE APRIL 2025	DRAWING No. SL\CD\0009
ORIGINAL SIZE A4 (297 x 210)	SCALE N.T.S.	

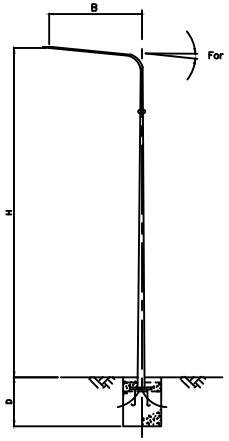

ELEVATION ON SINGLE BRACKET

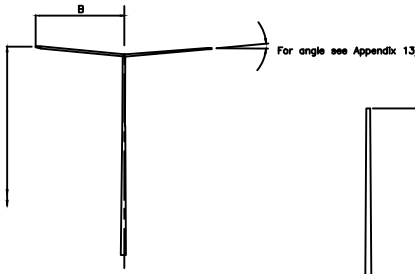

PART ELEVATION ON DOUBLE BRACKET

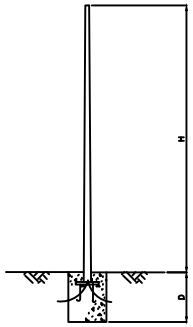

ELEVATION ON COLUMN

Dimension (D min) may be increased by 300 mm where foundation carries Suffix N and by 600 mm where foundation carries suffix M.

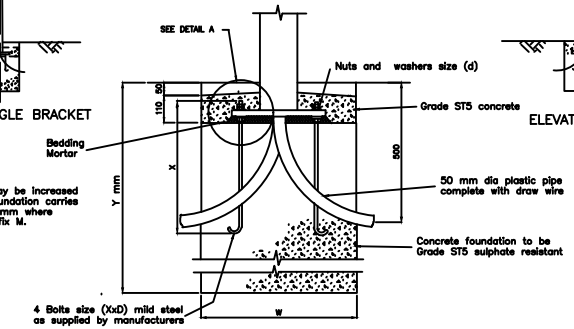

FOUNDATION TYPE 3

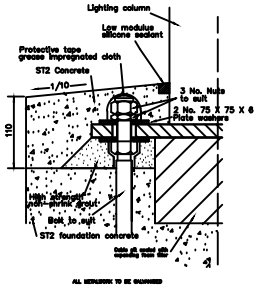

DETAIL A

Column hight (H) metres	Column Foundation (w) metres	(Y) metres	Bolt size X mm	x d mm	Flange Plate Over all size mm	Bolt Centres mm	Alternative for (B) metres	
5	0.8x0.6	1.06	500	24	400	300	0.3	
6	0.8x0.6	1.06	500	24	400	300	0.5	0.8
8	0.8x0.6	1.16	700	24	400	300	1.0	1.5
10	0.8x0.6	1.25	700	24	400	300	2.0	2.5
12	0.8x0.6	1.36	700	24	400	300	2.0	2.5
15	0.9x0.9	1.96	700	27	400	300	2.0	7.5
16	1.1x1.1	2.26	1150	27	500	400	2.0	2.5
18	1.3x1.3	2.26	1150	27	500	400	2.0	2.5

NOTES

1. All dimensions in millimetres unless stated otherwise.
2. All columns shall be octagonal steel and tapered and shall comply with Clause 1301 and the specific requirements of Appendix 13/1.
3. Columns shall be set out in accordance with the Contract and shall present a flowing alignment.
4. Posts shall be erected vertically and shall be suitably braced for 3 days after backfilling to prevent movement.
5. Material Specification Clauses:
   (i) Grade ST5 concrete to 1700 Series;
   (ii) Grade ST5 concrete to 2602.
6. Material above lighting column foundation shall comply with the requirements for adjacent areas.

ALTERNATIVE REQUIREMENTS	Foundation Suffix
Foundation increased by 300 mm	N
Foundation increased by 600 mm	M

ROAD LIGHTING COLUMN AND BRACKETS

TAPERED OCTAGONAL STEEL COLUMN FOUNDATION TYPE 3

Mapping material in this plot has been reproduced from the Ordnance Survey Digital Data with the permission of the Controller of HMSO (c). Crown Copyright Reserved 1996, Licence No 100020759
Unauthorised reproduction infringes Crown Copyright and may lead to prosecution or civil proceedings.

NORTH EAST LINCOLNSHIRE COUNCIL
www.nelincs.gov.uk

Highways and Transport
Municipal Offices, Town Hall Sq, Grimsby DN31 1HU, North East Lincolnshire.
Tel. (01472) 313131

CLIENT
NORTH EAST LINCOLNSHIRE COUNCIL

PROJECT
ROAD LIGHTING COLUMN AND BRACKETS

TITLE
TAPERED OCTAGONAL STEEL COLUMN FOUNDATION TYPE 3

DRAWN	APPROVED	FILE NAME
MDE		x:\eng-cons\design team\
FILE REF. SL\CD\0010	DATE APRIL 2025	DRAWING No. SL\CD\0010\A
ORIGINAL SIZE A4 (297 x 210)	SCALE N.T.S	

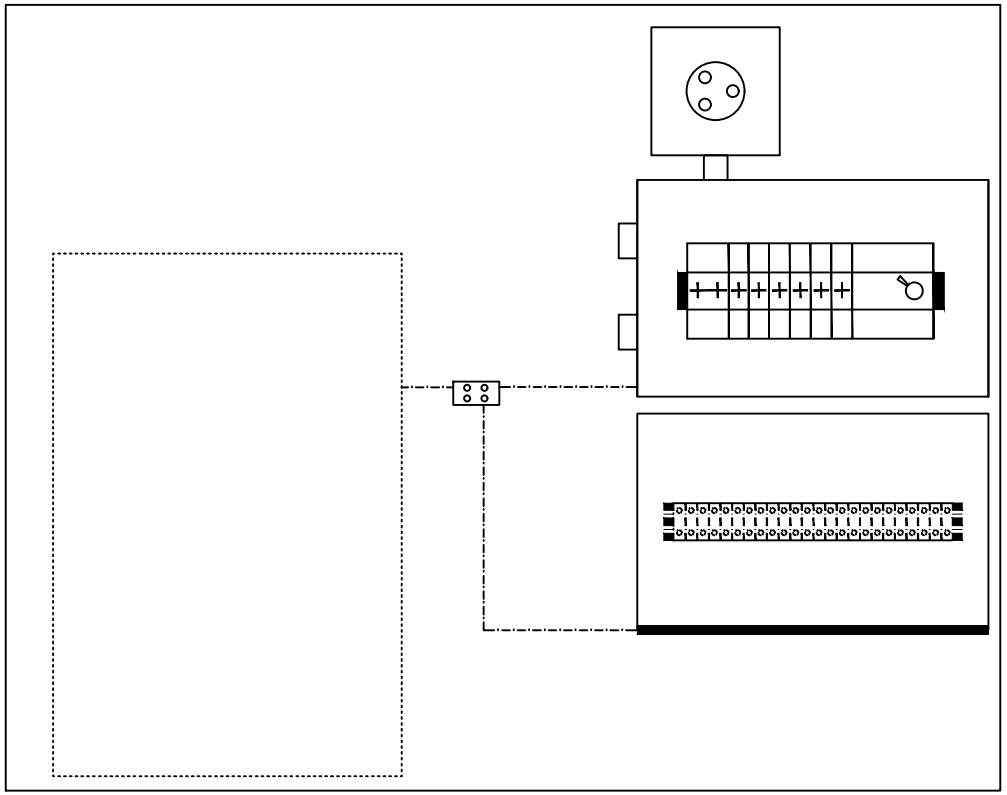

NOTES

1. All dimensions in millimetres unless otherwise stated.
2. All cabinets shall be constructed of glass fibre reinforced plastic Class 2 having a fire retardant capability of a minimum of 30 minutes and shall comply with the requirements of Clause 1418.
3. All internal fixing bolts and screws shall be manufactured from brass, holding down bolts shall be of galvanised steel.
4. Earthing shall comply with the requirements of Clause 1420.
5. Internal wiring between D.N.O. equipment and isolator shall be double insulated 25 mm2, cables between isolator and distribution fuses shall be single insulated 10 mm2, all cables within distribution board shall be single insulated 6 mm2. All cables shall comply with Clause 1419.
6. All PECU's shall comply with Clause 1409.
7. All cable terminations shall be made onto a 3 mm brass gland plate fitted to a glass fibre reinforced polyester enclosure within which connections will be made onto rail mounted terminals.
8. All MCB protective devices shall be M6 type 2 and of a rating specified on the scheme schematic.
9. All HRC protective devices shall comply with BS 88 and be of a rating specified on the scheme schematic.
10. The RCD shal be DC sensitive and have a sensitivity of 30 mA with a current rating of 25 A.
11. All bonding conductors shall be 10 mm2.
12. Main Equipotential bonding conductor shall be 16 mm2.
13. Earthing terminal shall be a 4 way Brass earth block fitted securely to the backboard by two brass screws and a warning notice shall be fixed adjacentto the earth terminal.
14. All enclosures shall be manufactured from glass fibre reinforced polyester with a clear hinged polycarbonate lid, secured by means of slotted screws of a similar material to the enclosure.
15. All MCB's, RCD's, Contactors and Bs 88 fuse carriers shall be so designed as to be mounted on DIN rail.
16. All rail mounted terminals shall be separated with phase dividers and be colour coded giving phase identification.
17. For Feeder Pillar Type 10 single phase remoted switched wiring diagram refer to drawing SL/CD/0016
18. For Feeder Pillar Single Phase foundation detail refer to drawing SL/CD/0017

Mapping material in this plot has been reproduced from the Ordnance Survey Digital Data with the permission of the Controller of HMSO (c). Crown Copyright Reserved 1996, Licence No 100020759
Unauthorised reproduction infringes Crown Copyright and may lead to prosecution or civil proceedings.

NORTH EAST LINCOLNSHIRE COUNCIL
www.nelincs.gov.uk

Highways and Transport
Municipal Offices, Town Hall Sq, Grimsby
DN31 1HU, North East Lincolnshire.
Tel. (01472) 313131

CLIENT
NORTH EAST LINCOLNSHIRE COUNCIL

PROJECT
ELECTRICAL WORK FOR ROAD LIGHTING AND TRAFFIC SIGNS

TITLE
FEEDER PILLAR TYPE 10
SINGLE PHASE REMOTE SWITHCHED

DRAWN: MDE	APPROVED:	FILE NAME: x:\eng-cons\design team\
FILE REF.: SL\CD\0015	DATE: APRIL 2025	DRAWING No.: SL\CD\0015\A
ORIGINAL SIZE: A4 (297 x 210)	SCALE: N.T.S	

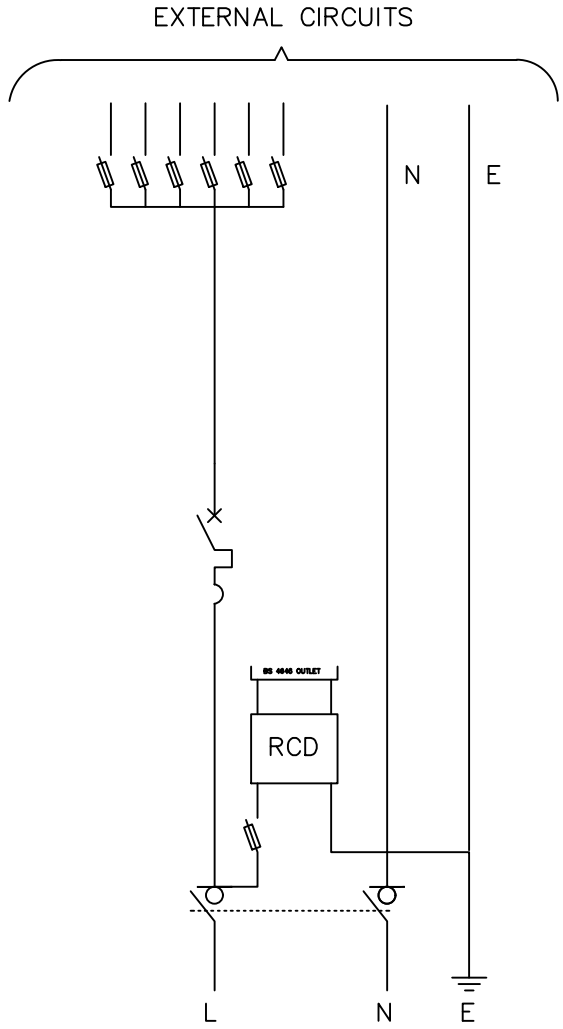

NOTES

1. For Feeder Pillar Type 10 remote switches refer to drawing SL/CD/0015A
2. For Feeder Pillar foundation detail refer to drawing SL/CD/0017

Mapping material in this plot has been reproduced from the Ordnance Survey Digital Data with the permission of the Controller of HMSO (c). Crown Copyright Reserved 1996, Licence No 100020759
Unauthorised reproduction infringes Crown Copyright and may lead to prosecution or civil proceedings.

NORTH EAST LINCOLNSHIRE COUNCIL
www.nelincs.gov.uk

Highways and Transport
Municipal Offices, Town Hall Sq, Grimsby
DN31 1HU, North East Lincolnshire.
Tel. (01472) 313131

CLIENT
NORTH EAST LINCOLNSHIRE COUNCIL

PROJECT
ELECTRICAL WORK FOR ROAD LIGHTING AND TRAFFIC SIGNS

TITLE
FEEDER PILLAR TYPE 10
SINGLE PHASE REMOTE SWITCHED
WIRING DETAIL

DRAWN: MDE	APPROVED:	FILE NAME: x:\eng-cons\design team\
FILE REF.: SL\CD\0016	DATE: APRIL 2025	DRAWING No.: SL\CD\0016
ORIGINAL SIZE: A4 (297 x 210)	SCALE: N.T.S	

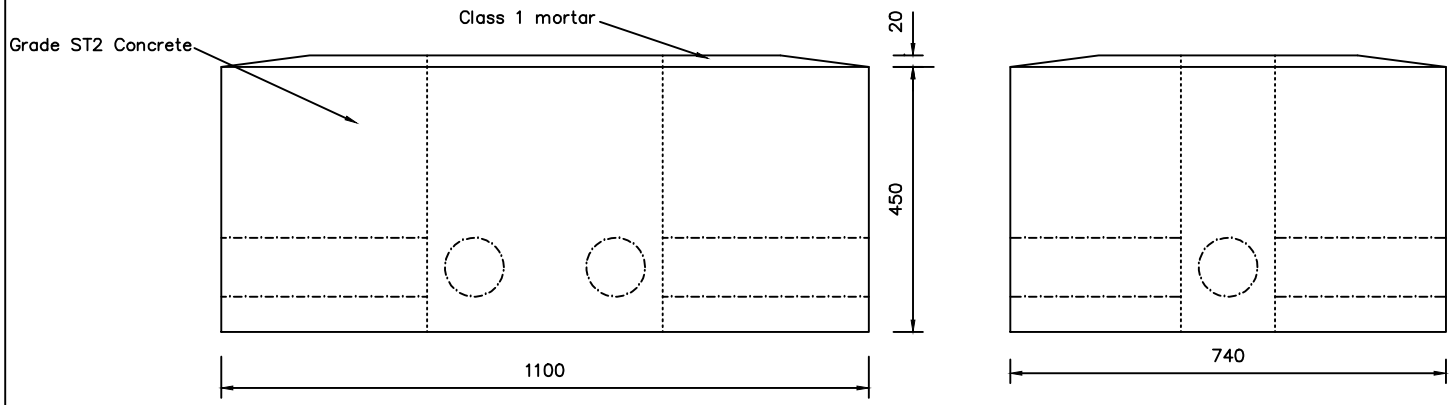

NOTES

1. All dimensions in millimeters unless otherwise stated.
2. All feeder pillar bases shall be upon completion of the works be filled to the top of the base with fine aggregate to BS 882, any suitable material which passes through a 2 mm sieve.
3. On un-made ground all feeder pillars shall be provided with 500 x 500 x 60 mm concrete slabs to the front of the pillar, and shall be placed for the full length of the base.
4. For Feeder Pillar Type 10 remote switches refer to drawing SL/CD/0015A
5. For Feeder Pillar Single Phase foundation detail refer to drawing SL/CD/0017

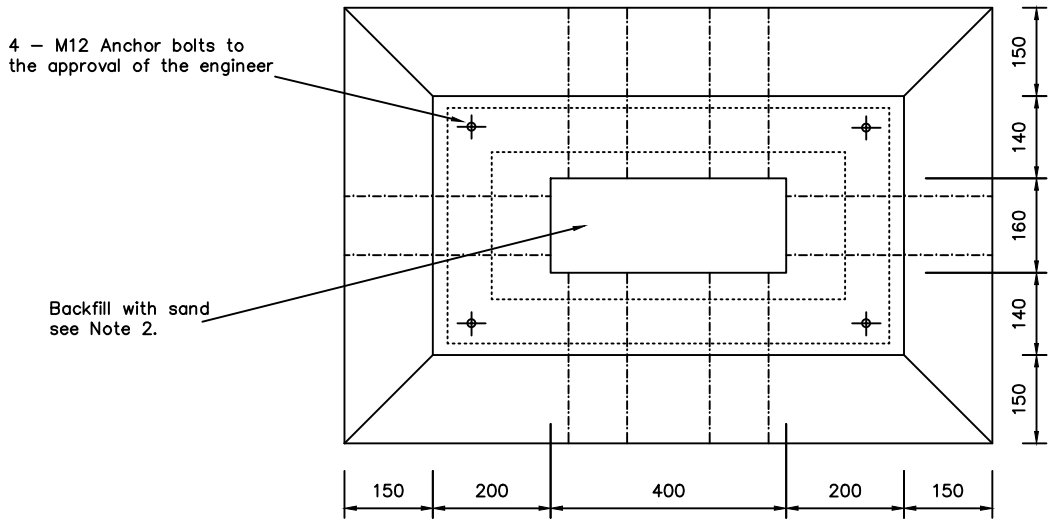

Mapping material in this plot has been reproduced from the Ordnance Survey Digital Data with the permission of the Controller of HMSO (c). Crown Copyright Reserved 1996, Licence No 100020759
Unauthorised reproduction infringes Crown Copyright and may lead to prosecution or civil proceedings.

NORTH EAST LINCOLNSHIRE COUNCIL
www.nelincs.gov.uk

Highways and Transport
Municipal Offices, Town Hall Sq, Grimsby
DN31 1HUy, North East Lincolnshire.
Tel. (01472) 313131

CLIENT
NORTH EAST LINCOLNSHIRE COUNCIL

PROJECT
ELECTRICAL WORK FOR ROAD LIGHTING AND TRAFFIC SIGNS

TITLE
FEEDER PILLAR
SINGLE PHASE FOUNDATION DETAILS

DRAWN: MDE	APPROVED:	FILE NAME: x:\eng-cons\design team\
FILE REF.: SL\CD\0017	DATE: APRIL 2025	DRAWING No.: SL\CD\0017
ORIGINAL SIZE: A4 (297 x 210)	SCALE: N.T.S	

NOTES

1. All dimensions in millimetres unless otherwise stated.
2. All cabinets shall be constructed of glass fibre reinforced plastic Class 2 having a fire retardant capability of a minimum of 30 minutes and shall comply with the requirements of Clause 1418.
3. All internal fixing bolts and screws shall be manufactured from brass, holding down bolts shall be of galvanised steel.
4. Earthing shall comply with the requirements of Clause 1420.
5. Internal wiring between D.N.O. equipment and isolator shall be double insulated 25 mm2, cables between isolator and distribution fuses shall be single insulated 10 mm2, all cables within distribution board shall be single insulated 6 mm2. All cables shall comply with Clause 1419.
6. One part photocells shall be fitted with a 20 mm threaded body and shall be installed to the side of the cabinet (facing away from on coming traffic) with a locknut of the same material as the photocell body.
7. Photocell terminations shall be enclosed in glass fibre reinforced polyester box mounted to the backboard, and interconnected to the main control panel by means of 20 mm flexible PVC conduit secured at both ends with locknuts of a similar material.
8. All PECU's shall comply with Clause 1409.
9. All cable terminations shall be made onto a 3 mm brass gland plate fitted to a glass fibre reinforced polyester enclosure within which connections will be made onto rail mounted terminals.
10. All MCB protective devices shall be M6 type 2 and of a rating specified on the scheme schematic.
11. All HRC protective devices shall comply with BS 88 and be of a rating specified on the scheme schematic.
12. The RCD shal be DC sensitive and have a sensitivity of 30 mA with a current rating of 25 A.
13. All bonding conductors shall be 10 mm2.
14. Main Equipotential bonding conductor shall be 16 mm2.
15. Earthing terminal shall be a 4 way Brass earth block fitted securely to the backboard by two brass screws and a warning notice shall be fixed adjacentto the earth terminal.
16. All enclosures shall be manufactured from glass fibre reinforced polyester with a clear hinged polycarbonate lid, secured by means of slotted screws of a similar material to the enclosure.
17. All MCB's, RCD's, Contactors and Bs 88 fuse carriers shall be so designed as to be mounted on DIN rail.
18. All rail mounted terminals shall be separated with phase dividers and be colour coded giving phase identification.

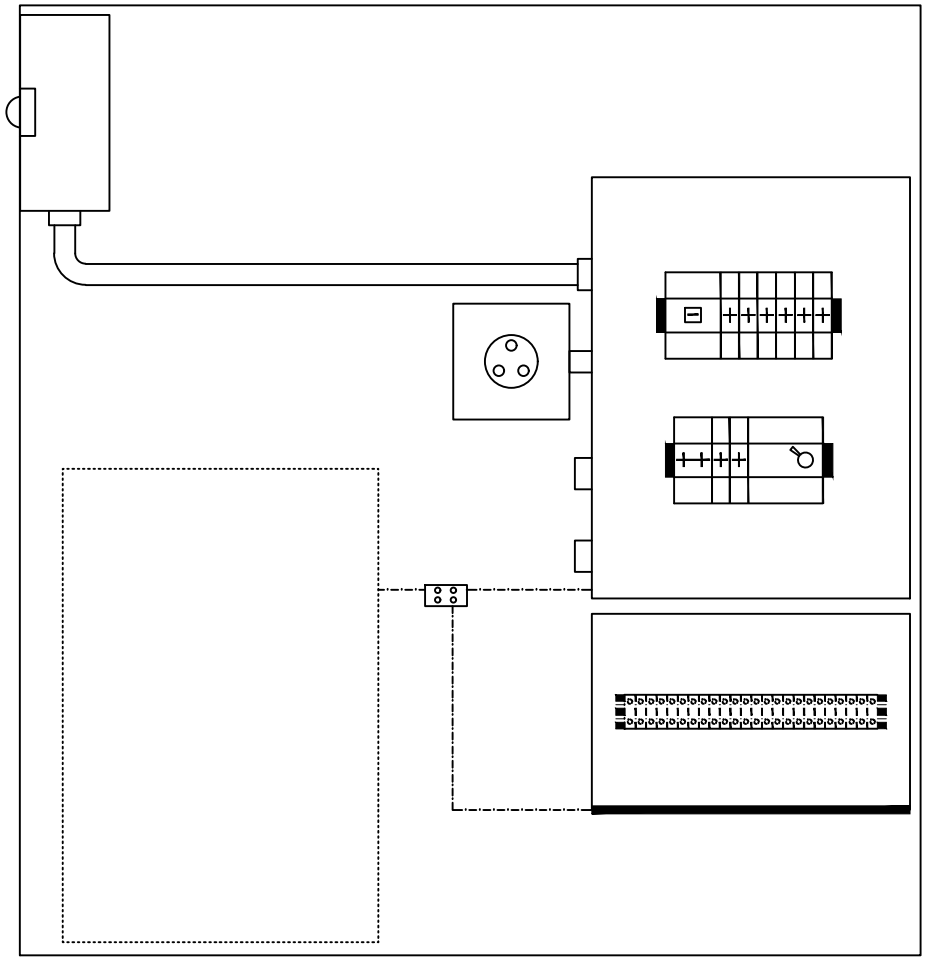

Mapping material in this plot has been reproduced from the Ordnance Survey Digital Data with the permission of the Controller of HMSO (c). Crown Copyright Reserved 1996, Licence No 100020759 Unauthorised reproduction infringes Crown Copyright and may lead to prosecution or civil proceedings.

NORTH EAST LINCOLNSHIRE COUNCIL
www.nelincs.gov.uk

Highways and Transport
Municipal Offices, Town Hall Sq, Grimsby
DN31 1HU, North East Lincolnshire.
Tel. (01472) 313131

CLIENT
NORTH EAST LINCOLNSHIRE COUNCIL

PROJECT
ELECTRICAL WORK FOR ROAD

TITLE
FEEDER PILLAR TYPE 12
SINGLE PHASE GROUP SWITCHED

DRAWN: MDE	APPROVED:	FILE NAME: x:\eng-cons\design team\
FILE REF.: SL\CD\0018	DATE: APRIL 2025	DRAWING No.: SL\CD\0018\A
ORIGINAL SIZE: A4 (297 x 210)	SCALE: N.T.S	

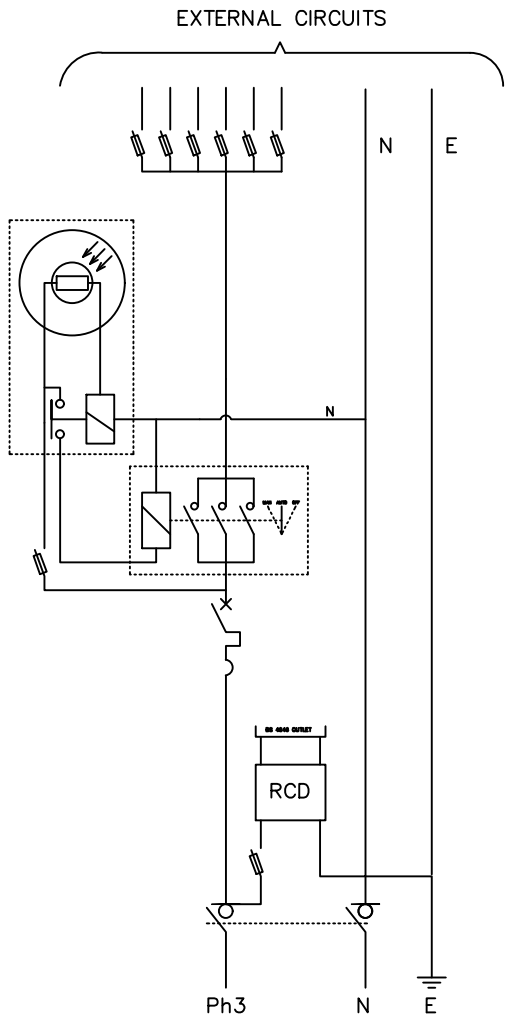

Mapping material in this plot has been reproduced from the Ordnance Survey Digital Data with the permission of the Controller of HMSO (c). Crown Copyright Reserved 1996, Licence No 100020759 Unauthorised reproduction infringes Crown Copyright and may lead to prosecution or civil proceedings.

NORTH EAST LINCOLNSHIRE COUNCIL
www.nelincs.gov.uk

Highways and Transport

Municipal Offices, Town Hall Sq, Grimsby
DN31 1HU, North East Lincolnshire.
Tel. (01472) 313131

CLIENT
NORTH EAST LINCOLNSHIRE COUNCIL

PROJECT
ELECTRICAL WORK FOR ROAD LIGHTING AND TRAFFIC SIGNS

TITLE
FEEDER PILLAR TYPE 12
SINGLE PHASE GROUP SWITCHED
WIRING DETAIL

DRAWN: MDE	APPROVED:	FILE NAME: x:\eng-cons\design team\
FILE REF.: SL\CD\0019	DATE: APRIL 2025	DRAWING No.: SL\CD\0019\A
ORIGINAL SIZE: A4 (297 x 210)	SCALE: N.T.S	

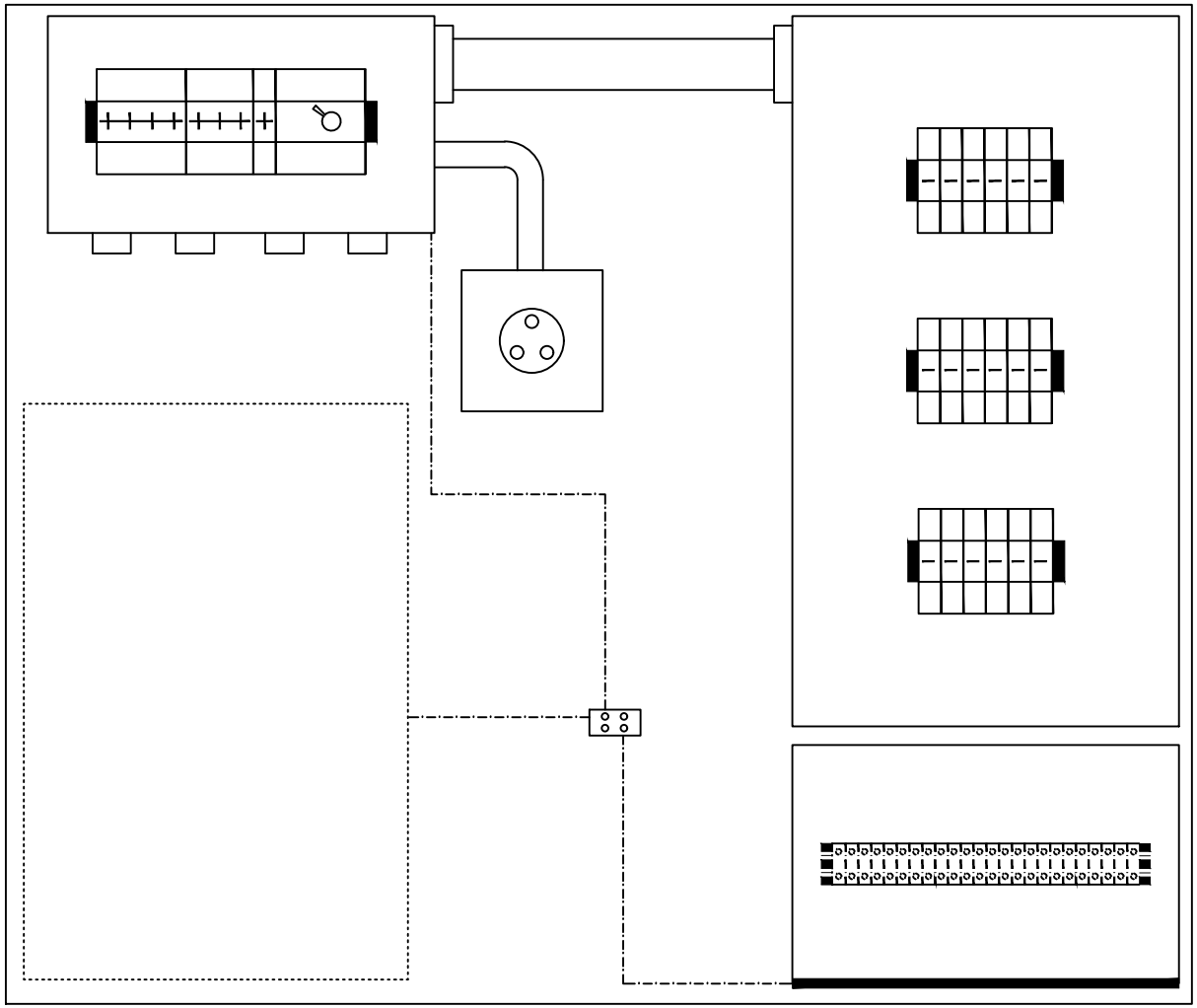

NOTES

1. All dimensions in millimetres unless otherwise stated.
2. All cabinets shall be constructed of glass fibre reinforced plastic Class 2 having a fire retardant capability of a minimum of 30 minutes and shall comply with the requirements of Clause 1418.
3. All internal fixing bolts and screws shall be manufactured from brass, holding down bolts shall be of galvanised steel.
4. Earthing shall comply with the requirements of Clause 1420.
5. Internal wiring between D.N.O. equipment and isolator shall be double insulated 25 mm2, cables between isolator and distribution fuses shall be single insulated 10 mm2, all cables within distribution board shall be single insulated 6 mm2. All cables shall comply with Clause 1419.
6. All PECU's shall comply with Clause 1409.
7. All cable terminations shall be made onto a 3 mm brass gland plate fitted to a glass fibre reinforced polyester enclosure within which connections will be made onto rail mounted terminals.
8. All MCB protective devices shall be M6 type 2 and of a rating specified on the scheme schematic.
9. All HRC protective devices shall comply with BS 88 and be of a rating specified on the scheme schematic.
10. The RCD shal be DC sensitive and have a sensitivity of 30 mA with a current rating of 25 A.
11. All bonding conductors shall be 10 mm2.
12. Main Equipotential bonding conductor shall be 16 mm2.
13. Earthing terminal shall be a 4 way Brass earth block fitted securely to the backboard by two brass screws and a warning notice shall be fixed adjacentto the earth terminal.
14. All enclosures shall be manufactured from glass fibre reinforced polyester with a clear hinged polycarbonate lid, secured by means of slotted screws of a similar material to the enclosure.
15. All MCB's, RCD's, Contactors and Bs 88 fuse carriers shall be so designed as to be mounted on DIN rail.
16. All rail mounted terminals shall be separated with phase dividers and be colour coded giving phase identification.
17. For Feeder Pillar Type 30 3 phase remote switch wiring detail refer to drawing SL/CD/0023A
18. For Feeder Pillar 3 phase foundation detail refer to drawing SL/CD/0024A

Mapping material in this plot has been reproduced from the Ordnance Survey Digital Data with the permission of the Controller of HMSO (c). Crown Copyright Reserved 1996, Licence No 100020759
Unauthorised reproduction infringes Crown Copyright and may lead to prosecution or civil proceedings.

NORTH EAST LINCOLNSHIRE COUNCIL
www.nelincs.gov.uk

Highways and Transport
Municipal Offices, Town Hall Sq, Grimsby
DN31 1HU, North East Lincolnshire.
Tel. (01472) 313131

CLIENT
NORTH EAST LINCOLNSHIRE COUNCIL

PROJECT
ELECTRICAL WORK FOR ROAD LIGHTING AND TRAFFIC SIGNS

TITLE
FEEDER PILLAR TYPE 30
3 PHASE REMOTE SWITCHED

DRAWN: MDE	APPROVED:	FILE NAME: x:\eng-cons\design team\
FILE REF.: SL\CD\0022	DATE: APRIL 2025	DRAWING No.: SL\CD\0022\A
ORIGINAL SIZE: A4 (297 x 210)	SCALE: N.T.S	

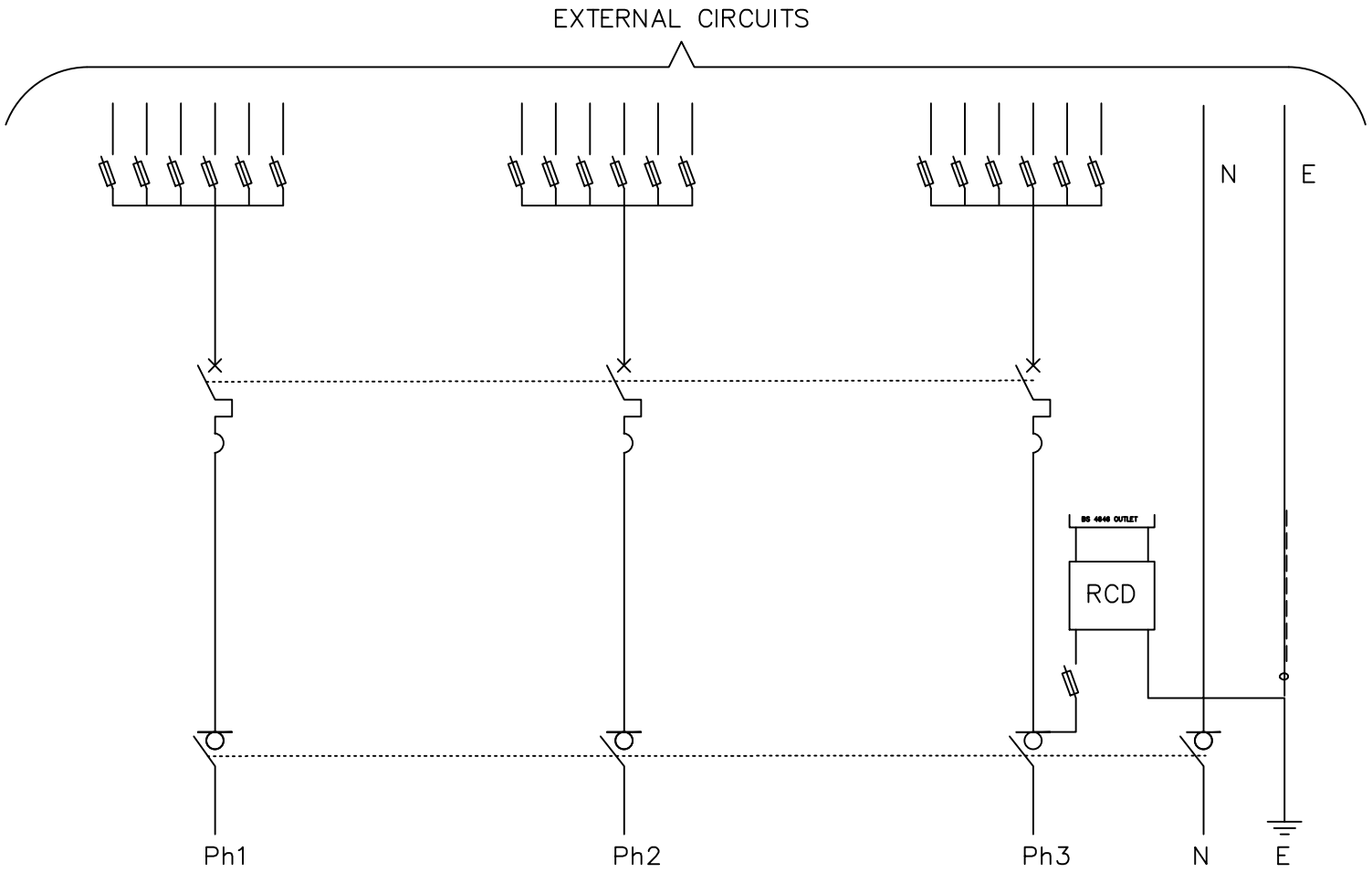

Notes

17. For Feeder Pillar Type 30 3 phase remote switched drawing SL/CD/0022A
18. For Feeder Pillar 3 phase foundation detail refer to drawing SL/CD/0024A

Mapping material in this plot has been reproduced from the Ordnance Survey Digital Data with the permission of the Controller of HMSO (c). Crown Copyright Reserved 1996, Licence No 100020759 Unauthorised reproduction infringes Crown Copyright and may lead to prosecution or civil proceedings.

NORTH EAST LINCOLNSHIRE COUNCIL
www.nelincs.gov.uk

Highways and Transport

Municipal Offices, Town Hall Sq, Grimsby
DN31 1HU, North East Lincolnshire.
Tel. (01472) 313131

CLIENT
NORTH EAST LINCOLNSHIRE COUNCIL

PROJECT
ELECTRICAL WORK FOR ROAD LIGHTING AND TRAFFIC SIGNALS

TITLE
FEEDER PILLAR TYPE 30
3 PHASE REMOTE SWITCHED
WIRING DETAIL

DRAWN: MDE	APPROVED:	FILE NAME: x:\eng-cons\design team\
FILE REF.: SL\CD\0023	DATE: APRIL 2025	DRAWING No.: SL\CD\0023\A
ORIGINAL SIZE: A4 (297 x 210)	SCALE: N.T.S	

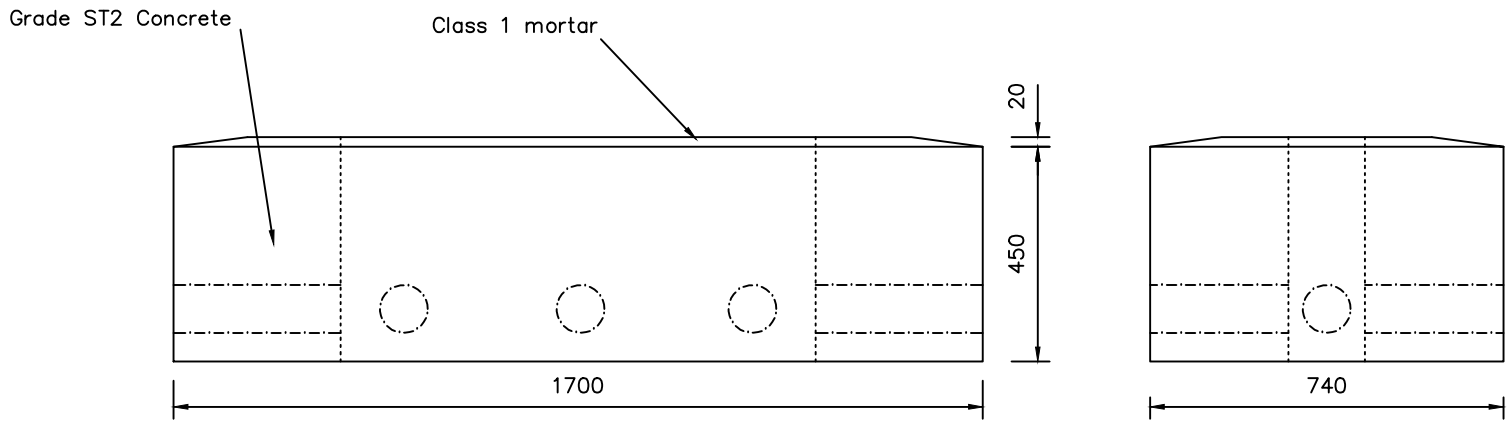

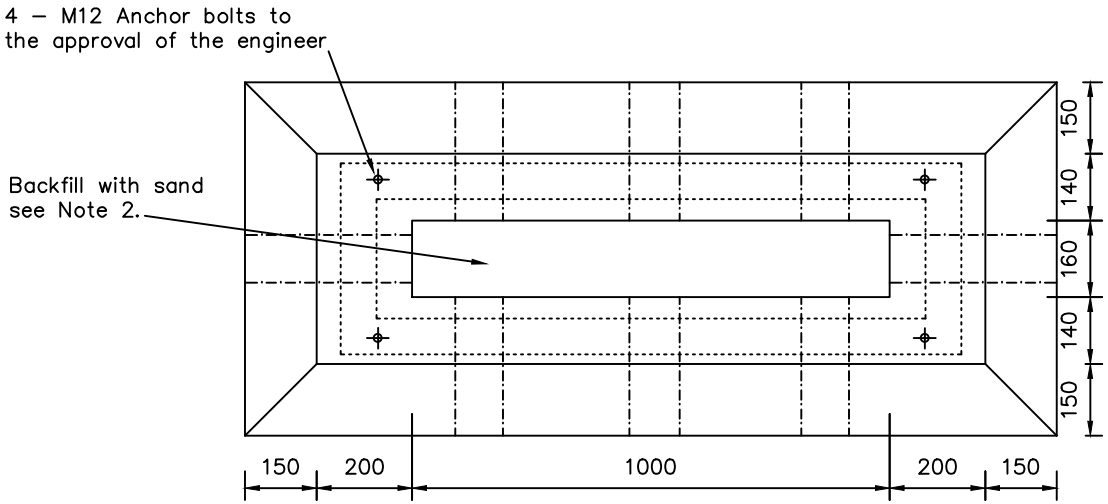

NOTES

1. All dimensions in millimeters unless otherwise stated.
2. All feeder pillar bases shall be upon completion of the works be filled to the top of the base with fine aggregate to BS 882, any suitable material which passes through a 2 mm sieve.
3. On un–made ground all feeder pillars shall be provided with 500 x 500 x 60 mm concrete slabs to the front of the pillar, and shall be placed for the full length of the base.
3. For Feeder Pillar Type 30 3 phase remote switch wiring detail refer to drawing SL/CD/0023A
18. For Feeder Pillar 3 phase foundation detail refer to drawing SL/CD/0024A

Mapping material in this plot has been reproduced from the Ordnance Survey Digital Data with the permission of the Controller of HMSO (c). Crown Copyright Reserved 1996, Licence No 100020759
Unauthorised reproduction infringes Crown Copyright and may lead to prosecution or civil proceedings.

NORTH EAST LINCOLNSHIRE COUNCIL
www.nelincs.gov.uk

Highways and Transport
Municipal Offices, Town Hall Sq, Grimsby
DN31 1HU, North East Lincolnshire.
Tel. (01472) 313131 Fax

CLIENT
NORTH EAST LINCOLNSHIRE COUNCIL

PROJECT
ELECTRICAL WORK FOR ROAD LIGHTING AND TRAFFIC SIGNS

TITLE
FEEDER PILLAR
3 PHASE FOUNDATION DETAIL

DRAWN: MDE	APPROVED:	FILE NAME: x:\eng–cons\design team\
FILE REF.: SL\CD\0024	DATE: APRIL 2025	DRAWING No.: SL\CD\0024
ORIGINAL SIZE: A4 (297 x 210)	SCALE: N.T.S	

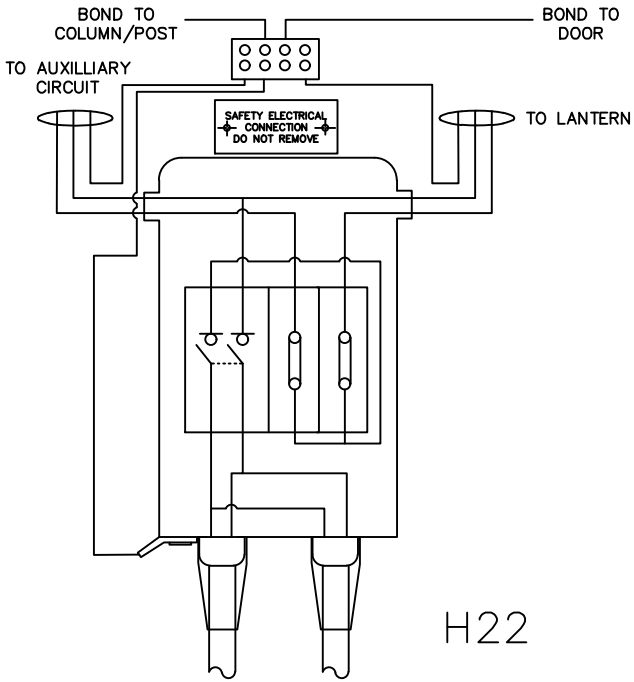

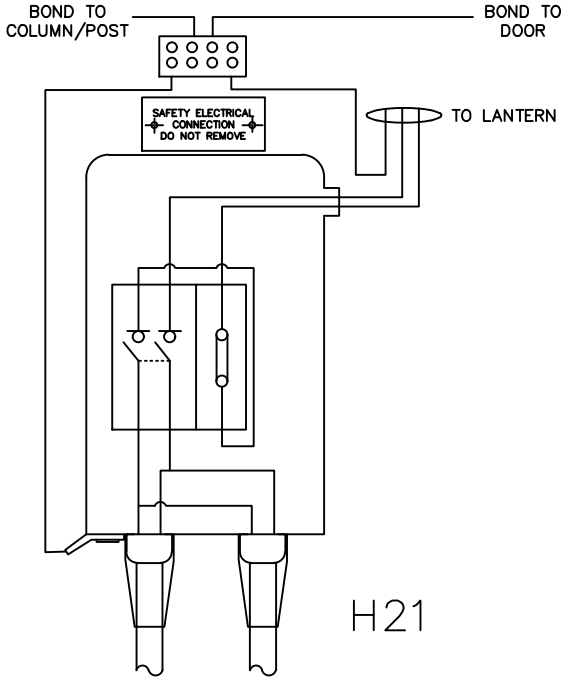

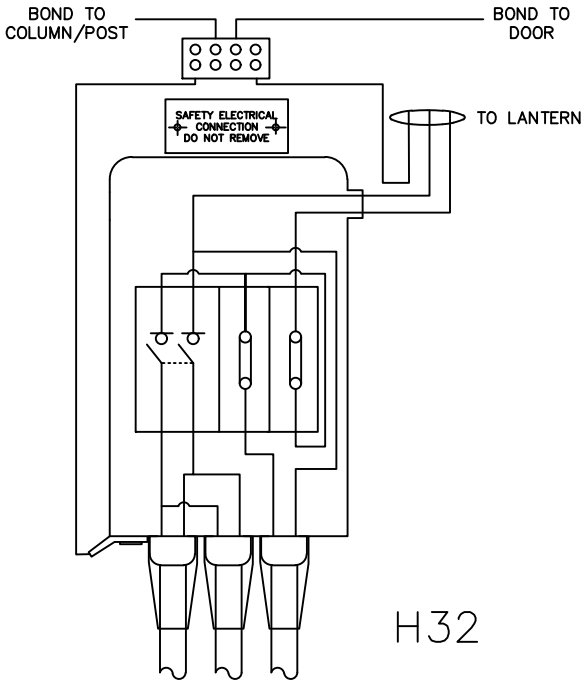

Mapping material in this plot has been reproduced from the Ordnance Survey Digital Data with the permission of the Controller of HMSO (c). Crown Copyright Reserved 1996, Licence No 100020759
Unauthorised reproduction infringes Crown Copyright and may lead to prosecution or civil proceedings.

NORTH EAST LINCOLNSHIRE COUNCIL
www.nelincs.gov.uk

Highways and Transport
Municipal Offices, Town Hall Sq, Grimsby
DN31 1HU, North East Lincolnshire.
Tel. (01472) 313131

CLIENT
NORTH EAST LINCOLNSHIRE COUNCIL

PROJECT
STANDARD DETAILS – ELECTRICAL WORK FOR STREET LIGHTING AND TRAFFIC SIGNS

TITLE
Electrical Wiring Details
Cable Terminations

DRAWN: D.Kerry	APPROVED:	FILE NAME: x:\eng-cons\design team\
FILE REF.: SL\CD\0025	DATE: APRIL 2025	DRAWING No.: SL\CD\0026
ORIGINAL SIZE: A4 (297 x 210)	SCALE: N.T.S.	

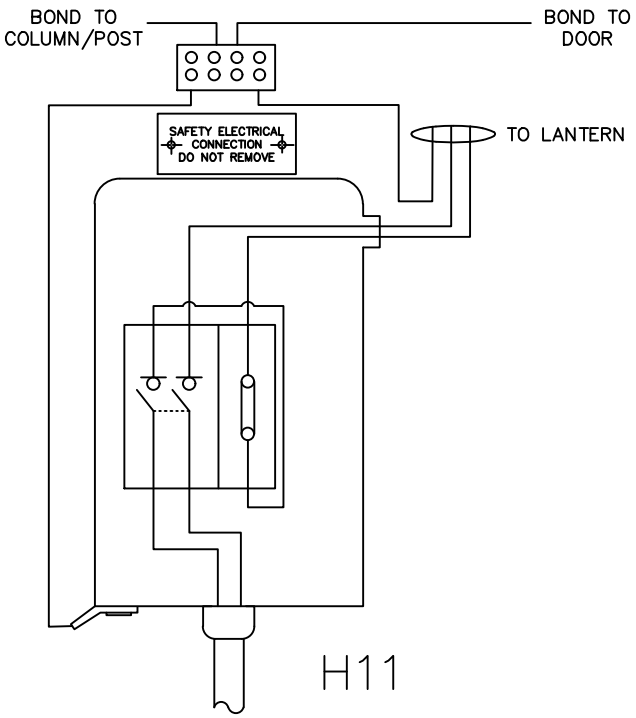

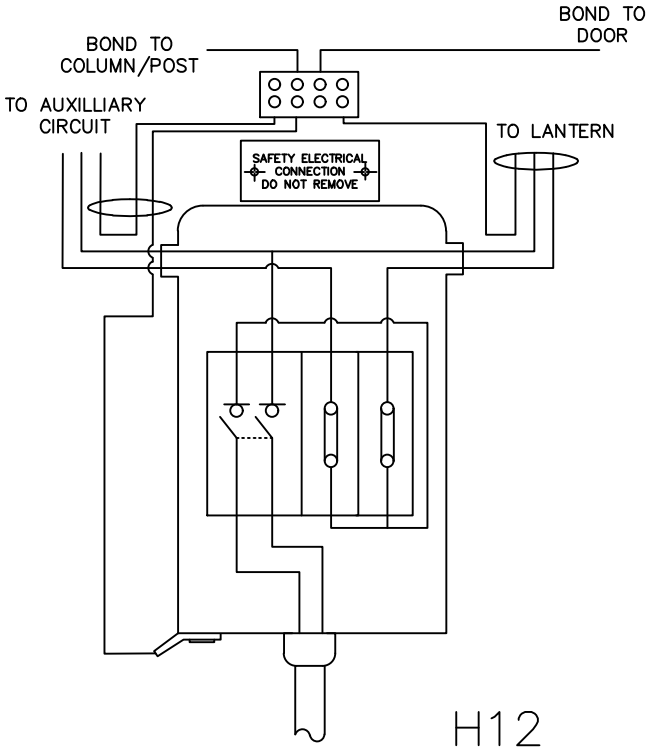

NOTES

1. All fused cut–out units shall comply with Clause 1416
2. All cable terminations within lighting units and lit traffic sign units shall comply with Clause 1423
3. All equipotential bonding conductors shall have a minimum croos sectional area of 6mm2.

Mapping material in this plot has been reproduced from the Ordnance Survey Digital Data with the permission of the Controller of HMSO (c). Crown Copyright Reserved 1996, Licence No 100020759
Unauthorised reproduction infringes Crown Copyright and may lead to prosecution or civil proceedings.

NORTH EAST LINCOLNSHIRE COUNCIL
www.nelincs.gov.uk

Highways and Transport
Municipal Offices, Town Hall Sq, Grimsby
DN31 1HU, North East Lincolnshire.
Tel. (01472) 313131

CLIENT
NORTH EAST LINCOLNSHIRE COUNCIL

PROJECT
STANDARD DETAILS – ELECTRICAL WORK FOR STREET LIGHTING AND TRAFFIC SIGNS

TITLE
Electrical Wiring Details
Cable Terminations

DRAWN	APPROVED	FILE NAME
D.Kerry		x:\eng–cons\design team\
FILE REF. SL\CD\0026	DATE APRIL 2025	DRAWING No. SL\CD\0026
ORIGINAL SIZE A4 (297 x 210)	SCALE N.T.S.	

Lot 1 NELC Asset Register'

Tag	Unit No.	Unit Type	Address 1	Address 2	Easting	Northing	LD09 - Year Erected	DOI - Date of Instalation	Unit ID	LI21 - Lantern Manufacturer	LD21 - LED Luminaire Model	LI27 - Lamp Wattage	LI11 - Mounting Height	LI12 - Column Material	
Y	1	TRAFFIC SIGN	CROSLAND ROAD	GRIMSBY	524018.32	409686.44			64043			3 Watts			
Y	2	TRAFFIC SIGN	CROSLAND ROAD	GRIMSBY	523890.24	409821.45			64044			7 Watts			
Y	1	TRAFFIC SIGN	GLENFIELD ROAD	GRIMSBY	523815.07	409813			64255			7 Watts			
Y	1A	TRAFFIC SIGN	GLENFIELD ROAD	GRIMSBY	523815.07	409813			64256						
Y	1	TRAFFIC SIGN	LARMOUR ROAD	GRIMSBY	523869.84	409642			64432			7 Watts			
Y	1	TRAFFIC SIGN	WOAD LANE	GREAT COATES	523921.31	410448.51			65246			3 Watts			
Y	10	TRAFFIC SIGN	WOAD LANE	GREAT COATES	524644.55	411296			65261			3 Watts			
Y	11	TRAFFIC SIGN	WOAD LANE	GREAT COATES	524638.55	411325.31			69193			6 Watts			
Y	12	TRAFFIC SIGN	WOAD LANE	GREAT COATES	523653.04	411346.15			69194			6 Watts			
Y	1A	TRAFFIC SIGN	WOAD LANE	GREAT COATES	523921.31	410448.51			65247						
Y	2	TRAFFIC SIGN	WOAD LANE	GREAT COATES	523921.64	410460.51			65248			3 Watts			
Y	2A	TRAFFIC SIGN	WOAD LANE	GREAT COATES	523921.64	410460.51			69366						
Y	4	TRAFFIC SIGN	WOAD LANE	GREAT COATES	524401.83	410776			65251			3 Watts			
Y	4A	TRAFFIC SIGN	WOAD LANE	GREAT COATES	524401.83	410776			65252						
Y	5	TRAFFIC SIGN	WOAD LANE	GREAT COATES	524399.11	410785			65253			3 Watts			
Y	5A	TRAFFIC SIGN	WOAD LANE	GREAT COATES	524399.11	410785			65254						
Y	7	TRAFFIC SIGN	WOAD LANE	GREAT COATES	524584.08	411112			65256			6 Watts			
Y	7A	TRAFFIC SIGN	WOAD LANE	GREAT COATES	524584.08	411112			65257						
Y	8	TRAFFIC SIGN	WOAD LANE	GREAT COATES	524593.36	411138			65258			3 Watts			
Y	8A	TRAFFIC SIGN	WOAD LANE	GREAT COATES	524593.36	411138			65259						
Y	9	TRAFFIC SIGN	WOAD LANE	GREAT COATES	524632.92	411248			65260			3 Watts			
Y	1	TRAFFIC SIGN	THE AVENUE	GREAT COATES	523418.94	409771			63628			3 Watts			
Y	1A	TRAFFIC SIGN	THE AVENUE	GREAT COATES	523418.94	409771			63629						
Y	1B	TRAFFIC SIGN	THE AVENUE	GREAT COATES	523418.94	409771			63630						
Y	2	TRAFFIC SIGN	THE AVENUE	GREAT COATES	523429.81	409770			63631			6 Watts			
Y	2A	TRAFFIC SIGN	THE AVENUE	GREAT COATES	523429.81	409770			63632						
Y	2B	TRAFFIC SIGN	THE AVENUE	GREAT COATES	523429.81	409770			63633						
Y	3	TRAFFIC SIGN	THE AVENUE	GREAT COATES	523441.87	409916			63634			4 Watts			
Y	4	TRAFFIC SIGN	THE AVENUE	GREAT COATES	523449.55	409921			63635			4 Watts			
Y	5	TRAFFIC SIGN	THE AVENUE	GREAT COATES	523449.55	409921			63636			4 Watts			
Y	6	TRAFFIC SIGN	THE AVENUE	GREAT COATES	523441.87	409916			63637			4 Watts			
Y	1	TRAFFIC SIGN	STATION ROAD	GREAT COATES	523344.65	409846			63617			4 Watts			
Y	1A	TRAFFIC SIGN	STATION ROAD	GREAT COATES	523344.65	409846			63618						
Y	2	TRAFFIC SIGN	STATION ROAD	GREAT COATES	523354.79	409837			63619			4 Watts			
Y	3	TRAFFIC SIGN	STATION ROAD	GREAT COATES	523354.79	409837			63620			7 Watts			
Y	4	TRAFFIC SIGN	STATION ROAD	GREAT COATES	523437.75	409933			63621			4 Watts			
Y	4A	TRAFFIC SIGN	STATION ROAD	GREAT COATES	523437.75	409933			63622						
Y	5	TRAFFIC SIGN	STATION ROAD	GREAT COATES	523564.01	410087			63623			7 Watts			
Y	5A	TRAFFIC SIGN	STATION ROAD	GREAT COATES	523564.01	410087			63624						
Y	6	TRAFFIC SIGN	STATION ROAD	GREAT COATES	523820.05	410327			63625			3 Watts			
Y	6A	TRAFFIC SIGN	STATION ROAD	GREAT COATES	523820.05	410327			63626						
Y	7	TRAFFIC SIGN	STATION ROAD	GREAT COATES	523862.34	410333			63627			3 Watts			
Y	1	TRAFFIC SIGN	MEADOWBANK	GREAT COATES	523557.66	410062.81			63616			3 Watts			
Y	1	TRAFFIC SIGN	WINGATE ROAD	GRIMSBY	524230.9	409944			65202			4 Watts			
Y	10	TRAFFIC SIGN	WINGATE ROAD	GRIMSBY	524077.12	409724			65368			3 Watts			
Y	11	TRAFFIC SIGN	WINGATE ROAD	GRIMSBY	524077.12	409724			65369			28 Watts			
Y	12	TRAFFIC SIGN	WINGATE ROAD	GRIMSBY	524079.61	409720			65206			3 Watts			
Y	13	TRAFFIC SIGN	WINGATE ROAD	GRIMSBY	524027.42	409671.24			65207			3 Watts			
Y	14	TRAFFIC SIGN	WINGATE ROAD	GRIMSBY	524010.32	409672.32			65208			3 Watts			
Y	15	TRAFFIC SIGN	WINGATE ROAD	GRIMSBY	524006.78	409661.55			66370						
Y	16	TRAFFIC SIGN	WINGATE ROAD	GRIMSBY	524005.93	409661.13			65209			49 Watts			
Y	17	TRAFFIC SIGN	WINGATE ROAD	GRIMSBY	524003.29	409659.58			66371						
Y	2N	TRAFFIC SIGN	WINGATE ROAD	GRIMSBY					68749						
Y	3	TRAFFIC SIGN	WINGATE ROAD	GRIMSBY	524168.61	409796			65364			11 Watts			
Y	4N	TRAFFIC SIGN	WINGATE ROAD	GRIMSBY					68887						
Y	5	TRAFFIC SIGN	WINGATE ROAD	GRIMSBY	524083.39	409723			65205			3 Watts			
Y	6	TRAFFIC SIGN	WINGATE ROAD	GRIMSBY	524085.87	409719			65365			3 Watts			
Y	7	TRAFFIC SIGN	WINGATE ROAD	GRIMSBY	524085.87	409719			65366			28 Watts			
Y	8	TRAFFIC SIGN	WINGATE ROAD	GRIMSBY	524082.21	409722			65367			3 Watts			
Y	9	TRAFFIC SIGN	WINGATE ROAD	GRIMSBY	524079.15	409721.21			67139			3 Watts			
Y	1	TRAFFIC SIGN	ARMSTRONG STREET	GRIMSBY	526767.91	410114			63716			3 Watts			
Y	10	TRAFFIC SIGN	ARMSTRONG STREET	GRIMSBY	526149.36	410137.33			69040			3 Watts			
Y	10A	TRAFFIC SIGN	ARMSTRONG STREET	GRIMSBY	526149.36	410137.33			69041						
Y	11	TRAFFIC SIGN	ARMSTRONG STREET	GRIMSBY	526088.34	410169.13			63725			4 Watts			
Y	11A	TRAFFIC SIGN	ARMSTRONG STREET	GRIMSBY	526088.34	410169.13			63726						
Y	11B	TRAFFIC SIGN	ARMSTRONG STREET	GRIMSBY	526088.34	410169.13			66452						
Y	12	TRAFFIC SIGN	ARMSTRONG STREET	GRIMSBY	526082.84	410154.97			63727			4 Watts			
Y	12A	TRAFFIC SIGN	ARMSTRONG STREET	GRIMSBY	526082.84	410154.97			63728						
Y	12B	TRAFFIC SIGN	ARMSTRONG STREET	GRIMSBY	526082.84	410154.97			66453						
Y	2	TRAFFIC SIGN	ARMSTRONG STREET	GRIMSBY	526341.23	410117			63717			4 Watts			
Y	3	TRAFFIC SIGN	ARMSTRONG STREET	GRIMSBY	526342.29	410126			63718			4 Watts			
Y	4	TRAFFIC SIGN	ARMSTRONG STREET	GRIMSBY	526297.61	410118			63719			4 Watts			
Y	5	TRAFFIC SIGN	ARMSTRONG STREET	GRIMSBY	526249.39	410118			63720			6 Watts			
Y	6	TRAFFIC SIGN	ARMSTRONG STREET	GRIMSBY	526214.64	410129			63721			3 Watts			
Y	7	TRAFFIC SIGN	ARMSTRONG STREET	GRIMSBY	526214.64	410129			63722			3 Watts			
Y	8	TRAFFIC SIGN	ARMSTRONG STREET	GRIMSBY	526210	410119			63723			3 Watts			
Y	9	TRAFFIC SIGN	ARMSTRONG STREET	GRIMSBY	526210	410119			63724			3 Watts			
Y	1	TRAFFIC SIGN	BEESON STREET	GRIMSBY	526189.08	410019			63773			4 Watts			
Y	2	TRAFFIC SIGN	BEESON STREET	GRIMSBY	526196.29	410012			63774			6 Watts			
Y	3	TRAFFIC SIGN	BEESON STREET	GRIMSBY					66835			6 Watts			
Y	1	TRAFFIC SIGN	CHARLTON STREET	GRIMSBY	526349.1	410108			63877			7 Watts			
Y	2	TRAFFIC SIGN	CHARLTON STREET	GRIMSBY	526363.76	410133			63878			7 Watts			
Y	1	TRAFFIC SIGN	ELSENHAM ROAD	GRIMSBY	526073.93	410175			64132			4 Watts			
Y	1A	TRAFFIC SIGN	ELSENHAM ROAD	GRIMSBY	526073.93	410175			64133						
Y	2	TRAFFIC SIGN	ELSENHAM ROAD	GRIMSBY	525853.25	410263			64134			4 Watts			
Y	3	TRAFFIC SIGN	ELSENHAM ROAD	GRIMSBY	525851.95	410251			64135			4 Watts			
Y	1	TRAFFIC SIGN	FREDERICK STREET	GRIMSBY	526781.69	409739			64178			4 Watts			
Y	2	TRAFFIC SIGN	FREDERICK STREET	GRIMSBY	526783.46	409750			64179			4 Watts			
Y	3	TRAFFIC SIGN	FREDERICK STREET	GRIMSBY	526783.46	409750			64180			4 Watts			
Y	3A	TRAFFIC SIGN	FREDERICK STREET	GRIMSBY	526783.46	409750			64183						
Y	4	TRAFFIC SIGN	FREDERICK STREET	GRIMSBY	526781.69	409739			64181			4 Watts			
Y	4A	TRAFFIC SIGN	FREDERICK STREET	GRIMSBY	526781.69	409739			64182						
Y	1	TRAFFIC SIGN	GILBEY ROAD	GRIMSBY	526046.97	410056			64245			4 Watts			
Y	2	TRAFFIC SIGN	GILBEY ROAD	GRIMSBY	526049.55	410064			64246			4 Watts			
Y	3	TRAFFIC SIGN	GILBEY ROAD	GRIMSBY	525825.95	410152			64247			4 Watts			
Y	4	TRAFFIC SIGN	GILBEY ROAD	GRIMSBY	525819.22	410169			64248			4 Watts			
Y	5	TRAFFIC SIGN	GILBEY ROAD	GRIMSBY	525693.1	410214			65334			3 Watts			
Y	6	TRAFFIC SIGN	GILBEY ROAD	GRIMSBY	525693.69	410224			65335			3 Watts			
Y	7	TRAFFIC SIGN	GILBEY ROAD	GRIMSBY	525637.07	410251			64249			4 Watts			
Y	8	TRAFFIC SIGN	GILBEY ROAD	GRIMSBY	525631.04	410240			64250			4 Watts			
Y	1	TRAFFIC SIGN	NEWHAVEN TERRACE	GRIMSBY	526029.98	409974			64557			4 Watts			
Y	1A	TRAFFIC SIGN	NEWHAVEN TERRACE	GRIMSBY	526029.98	409974			64558						
Y	2	TRAFFIC SIGN	NEWHAVEN TERRACE	GRIMSBY	526033.17	409983			64559			4 Watts			
Y	2A	TRAFFIC SIGN	NEWHAVEN TERRACE	GRIMSBY	526033.17	409983			64560						
Y	3	TRAFFIC SIGN	NEWHAVEN TERRACE	GRIMSBY	526011.31	409987			64561			4 Watts			
Y	4	TRAFFIC SIGN	NEWHAVEN TERRACE	GRIMSBY	526012.02	409994			64562			4 Watts			
Y	4A	TRAFFIC SIGN	NEWHAVEN TERRACE	GRIMSBY	526012.02	409994			64563						

Y	5	TRAFFIC SIGN	NEWHAVEN TERRACE	GRIMSBY	525977.74	410009			64564			11 Watts			
Y	6	TRAFFIC SIGN	NEWHAVEN TERRACE	GRIMSBY	525975.85	410010			64565			4 Watts			
Y	7	TRAFFIC SIGN	NEWHAVEN TERRACE	GRIMSBY	525803.75	410093			64566			4 Watts			
Y	8	TRAFFIC SIGN	NEWHAVEN TERRACE	GRIMSBY	525611.08	410187			64567			4 Watts			
Y	1	TRAFFIC SIGN	PYEWIPE ROAD	GRIMSBY	526068.06	410082			64696			4 Watts			
Y	2	TRAFFIC SIGN	PYEWIPE ROAD	GRIMSBY	526101.36	410235			64697			3 Watts			
Y	4	TRAFFIC SIGN	PYEWIPE ROAD	GRIMSBY	526120.39	410349			64698			11 Watts			
Y	1	TRAFFIC SIGN	RENDEL STREET	GRIMSBY	526784.32	409979			64715			11 Watts			
Y	2	TRAFFIC SIGN	RENDEL STREET	GRIMSBY	526777.23	409987			64716			11 Watts			
Y	1	TRAFFIC SIGN	SANDFORD STREET	GRIMSBY	525982.7	410021			64752			4 Watts			
Y	1	TRAFFIC SIGN	BIRCHIN WAY	GRIMSBY	526085.08	410382			63777			6 Watts			
Y	2	TRAFFIC SIGN	BIRCHIN WAY	GRIMSBY	526036.38	410398			63778			4 Watts			
Y	1X	TRAFFIC SIGN	WEST COATES ROAD ROUNDABOUT	GRIMSBY	526015.1	410595.74			65064			7 Watts			
Y	2X	TRAFFIC SIGN	WEST COATES ROAD ROUNDABOUT	GRIMSBY	526013.71	410594.39			65065			7 Watts			
Y	3X	TRAFFIC SIGN	WEST COATES ROAD ROUNDABOUT	GRIMSBY	526012.32	410595.91			65066			7 Watts			
Y	10N	TRAFFIC SIGN	CORPORATION ROAD	GRIMSBY	526432.45	409965			63989						
Y	2	TRAFFIC SIGN	CORPORATION ROAD	GRIMSBY	526941.69	409953			63982			3 Watts			
Y	3	TRAFFIC SIGN	CORPORATION ROAD	GRIMSBY	526937.86	409943			63983			3 Watts			
Y	4	TRAFFIC SIGN	CORPORATION ROAD	GRIMSBY	526938.21	409951.99			68969						
Y	5	TRAFFIC SIGN	CORPORATION ROAD	GRIMSBY	526915.52	409954			63985			11 Watts			
Y	6	TRAFFIC SIGN	CORPORATION ROAD	GRIMSBY	526913.39	409962			63986						
Y	7	TRAFFIC SIGN	CORPORATION ROAD	GRIMSBY	526911.52	409954			63987			11 Watts			
Y	9N	TRAFFIC SIGN	CORPORATION ROAD	GRIMSBY	526437.06	409965			63988						
Y	1	TRAFFIC SIGN	WEST COATES ROAD	GRIMSBY	526030.57	410591.51			65062			11 Watts			
Y	2	TRAFFIC SIGN	WEST COATES ROAD	GRIMSBY	525996.38	410596.46			65063			6 Watts			
Y	10	TRAFFIC SIGN	ALEXANDRA ROAD	GRIMSBY	526820.7	409940			63705			4 Watts			
Y	10A	TRAFFIC SIGN	ALEXANDRA ROAD	GRIMSBY	526820.7	409940			63706						
Y	11	TRAFFIC SIGN	ALEXANDRA ROAD	GRIMSBY	526815.37	409946			63707			4 Watts			
Y	11A	TRAFFIC SIGN	ALEXANDRA ROAD	GRIMSBY	526815.37	409946			63708						
Y	12	TRAFFIC SIGN	ALEXANDRA ROAD	GRIMSBY	526800.13	409946			63709			4 Watts			
Y	13	TRAFFIC SIGN	ALEXANDRA ROAD	GRIMSBY	526813.83	409950			63710			4 Watts			
Y	14	TRAFFIC SIGN	ALEXANDRA ROAD	GRIMSBY	526813.83	409950			63711			4 Watts			
Y	14A	TRAFFIC SIGN	ALEXANDRA ROAD	GRIMSBY	526813.83	409950			63712						
Y	15	TRAFFIC SIGN	ALEXANDRA ROAD	GRIMSBY	526800.13	409946			63713			4 Watts			
Y	15A	TRAFFIC SIGN	ALEXANDRA ROAD	GRIMSBY	526800.13	409946			63714						
Y	1N	TRAFFIC SIGN	ALEXANDRA ROAD	GRIMSBY	526738.31	409479.25			69940						
Y	2	TRAFFIC SIGN	ALEXANDRA ROAD	GRIMSBY	526737.87	409480.38			65306			36 Watts			
Y	3	TRAFFIC SIGN	ALEXANDRA ROAD	GRIMSBY	526744.23	409483			63693			3 Watts			
Y	3A	TRAFFIC SIGN	ALEXANDRA ROAD	GRIMSBY	526744.23	409483			63694						
Y	4	TRAFFIC SIGN	ALEXANDRA ROAD	GRIMSBY	526744.23	409483			63695			3 Watts			
Y	4A	TRAFFIC SIGN	ALEXANDRA ROAD	GRIMSBY	526744.23	409483			63696						
Y	5N	TRAFFIC SIGN	ALEXANDRA ROAD	GRIMSBY	526737.51	409483.19			69941						
Y	6	TRAFFIC SIGN	ALEXANDRA ROAD	GRIMSBY	526729.81	409491			63698			4 Watts			
Y	6A	TRAFFIC SIGN	ALEXANDRA ROAD	GRIMSBY	526729.81	409491			63699						
Y	7	TRAFFIC SIGN	ALEXANDRA ROAD	GRIMSBY	526729.81	409491			63700			4 Watts			
Y	8	TRAFFIC SIGN	ALEXANDRA ROAD	GRIMSBY	526815.37	409946			63701			4 Watts			
Y	8A	TRAFFIC SIGN	ALEXANDRA ROAD	GRIMSBY	526815.37	409946			63702						
Y	9	TRAFFIC SIGN	ALEXANDRA ROAD	GRIMSBY	526820.7	409940			63703			4 Watts			
Y	9A	TRAFFIC SIGN	ALEXANDRA ROAD	GRIMSBY	526820.7	409940			63704						
Y	1	TRAFFIC SIGN	FISHERMANS WHARF	GRIMSBY	526917.96	409940			64174			3 Watts			
Y	2	TRAFFIC SIGN	FISHERMANS WHARF	GRIMSBY	526926.14	409941			64173			3 Watts			
Y	1	TRAFFIC SIGN	GRIME STREET	GRIMSBY	527182.08	409661			64292			3 Watts			
Y	1N	TRAFFIC SIGN	LOCK HILL	GRIMSBY	527235.11	410449			64475			4 Watts			
Y	1	TRAFFIC SIGN	LOWER SPRING STREET	GRIMSBY	527236.45	410299			64493			3 Watts			
Y	1	TRAFFIC SIGN	MARKET STREET	GRIMSBY	527177.96	409929.51			64500						
Y	2	TRAFFIC SIGN	MARKET STREET	GRIMSBY	527175.74	409919.58			64501						
Y	3N	TRAFFIC SIGN	MARKET STREET	GRIMSBY	527185.12	409919.23			64502						
Y	4	TRAFFIC SIGN	MARKET STREET	GRIMSBY	527192.53	409928.67			64503						
Y	5	TRAFFIC SIGN	MARKET STREET	GRIMSBY	527270.09	409909.68			66542			11 Watts			
Y	6	TRAFFIC SIGN	MARKET STREET	GRIMSBY	527269.51	409907.41			66543			11 Watts			
Y	1	TRAFFIC SIGN	MARKET STREET MINI ROUNDABOUT	GRIMSBY	527261.78	409928.75			64504			7 Watts			
Y	2	TRAFFIC SIGN	MARKET STREET MINI ROUNDABOUT	GRIMSBY	527262.3	409910.26			64506			7 Watts			
Y	3	TRAFFIC SIGN	MARKET STREET MINI ROUNDABOUT	GRIMSBY	527280.51	409911.08			64505			7 Watts			
Y	4	TRAFFIC SIGN	MARKET STREET MINI ROUNDABOUT	GRIMSBY	527282.61	409927.17			64507			6 Watts			
Y	1	TRAFFIC SIGN	NEW STREET	GRIMSBY	527040.58	409330.55			64549			3 Watts			
Y	1A	TRAFFIC SIGN	NEW STREET	GRIMSBY	527040.58	409330.55			64550						
Y	2	TRAFFIC SIGN	NEW STREET	GRIMSBY	527049.83	409330.55			64551			3 Watts			
Y	2A	TRAFFIC SIGN	NEW STREET	GRIMSBY	527049.83	409330.55			64552						
Y	3	TRAFFIC SIGN	NEW STREET	GRIMSBY	527036.44	409393.43			64553			3 Watts			
Y	4	TRAFFIC SIGN	NEW STREET	GRIMSBY	527042.97	409394.69			64554			3 Watts			
Y	5	TRAFFIC SIGN	NEW STREET	GRIMSBY	527042.97	409394.69			64555			3 Watts			
Y	6	TRAFFIC SIGN	NEW STREET	GRIMSBY	527036.44	409393.43			64556			3 Watts			
Y	1	TRAFFIC SIGN	QUEEN STREET	GRIMSBY	527259.36	409551			64709			3 Watts			
Y	1	TRAFFIC SIGN	TOWN HALL SQUARE	GRIMSBY	527126.24	409317.61			64886			3 Watts			
Y	2	TRAFFIC SIGN	TOWN HALL SQUARE	GRIMSBY	527126.24	409312.37			64887			3 Watts			
Y	3	TRAFFIC SIGN	TOWN HALL SQUARE	GRIMSBY	527126.24	409312.37			64888			3 Watts			
Y	4	TRAFFIC SIGN	TOWN HALL SQUARE	GRIMSBY	527126.24	409317.61			64889			3 Watts			
Y	5	TRAFFIC SIGN	TOWN HALL SQUARE	GRIMSBY	527137.53	409308			64890			4 Watts			
Y	1	TRAFFIC SIGN	VICTORIA STREET NORTH	GRIMSBY	527169.9	409948.07			64905						
Y	2	TRAFFIC SIGN	VICTORIA STREET NORTH	GRIMSBY	527170.87	409955.43			64906			3 Watts			
Y	3	TRAFFIC SIGN	VICTORIA STREET NORTH	GRIMSBY					66814			3 Watts			
Y	4	TRAFFIC SIGN	VICTORIA STREET NORTH	GRIMSBY					66815			3 Watts			
Y	5N	TRAFFIC SIGN	VICTORIA STREET NORTH	GRIMSBY	527229.71	410354			64907			4 Watts			
Y	1	TRAFFIC SIGN	WEST STREET	GRIMSBY	527150.85	409423.53			65069			4 Watts			
Y	1	TRAFFIC SIGN	PRINCE ALBERT GARDENS	GRIMSBY	527472.69	410417.09			66409			4 Watts			
Y	2N	TRAFFIC SIGN	PRINCE ALBERT GARDENS	GRIMSBY	527472.29	410409.62			66410						
Y	1	TRAFFIC SIGN	RAILWAY PLACE	GRIMSBY	527710.69	410493			64712			4 Watts			
Y	1N	TRAFFIC SIGN	FREEPORT WHARF	GRIMSBY	527152.66	409930			64203						
Y	2	TRAFFIC SIGN	FREEPORT WHARF	GRIMSBY	527137.52	409923.4			64204			6 Watts			
Y	3	TRAFFIC SIGN	FREEPORT WHARF	GRIMSBY	527137.52	409923.4			64205			11 Watts			
Y	4	TRAFFIC SIGN	FREEPORT WHARF	GRIMSBY	527129.89	409925.39			64207			6 Watts			
Y	5	TRAFFIC SIGN	FREEPORT WHARF	GRIMSBY	527129.89	409925.39			64208			11 Watts			
Y	6N	TRAFFIC SIGN	FREEPORT WHARF	GRIMSBY	527133.26	409932.32			64206						
Y	1	TRAFFIC SIGN	ALBERT STREET EAST	GRIMSBY	527761.5	410151			63671			7 Watts			
Y	1	TRAFFIC SIGN	ALBERT STREET WEST	GRIMSBY	527536.53	410190			63672			7 Watts			
Y	2	TRAFFIC SIGN	ALBERT STREET WEST	GRIMSBY	527536.53	410179			63673			11 Watts			
Y	3	TRAFFIC SIGN	ALBERT STREET WEST	GRIMSBY	527536.53	410179			63674			7 Watts			
Y	4	TRAFFIC SIGN	ALBERT STREET WEST	GRIMSBY	527665.49	410173			63675			3 Watts			
Y	5	TRAFFIC SIGN	ALBERT STREET WEST	GRIMSBY	527663.83	410164			63676			4 Watts			
Y	1	TRAFFIC SIGN	ALBION STREET	GRIMSBY	528026.42	410369.66			63677			11 Watts			
Y	10N	TRAFFIC SIGN	ALBION STREET	GRIMSBY					69943						
Y	11	TRAFFIC SIGN	ALBION STREET	GRIMSBY	527937.22	410085.44			65302			11 Watts			
Y	12	TRAFFIC SIGN	ALBION STREET	GRIMSBY	527936.93	410085.57			63683			11 Watts			
Y	13N	TRAFFIC SIGN	ALBION STREET	GRIMSBY	527906.71	409980			63684						
Y	14	TRAFFIC SIGN	ALBION STREET	GRIMSBY	527906.33	409979			65303			11 Watts			
Y	15N	TRAFFIC SIGN	ALBION STREET	GRIMSBY	527905.95	409976			63685						
Y	16	TRAFFIC SIGN	ALBION STREET	GRIMSBY	527899.52	409954			63686			11 Watts			
Y	17	TRAFFIC SIGN	ALBION STREET	GRIMSBY	527898.77	409951.01			69132			49 Watts			
Y	18N	TRAFFIC SIGN	ALBION STREET	GRIMSBY					69133						
Y	19	TRAFFIC SIGN	ALBION STREET	GRIMSBY	527848.55	409759			63688			4 Watts			

Y	2	TRAFFIC SIGN	ALBION STREET	GRIMSBY	528025.94	410366.86			63678			11 Watts			
Y	20	TRAFFIC SIGN	ALBION STREET	GRIMSBY	527840.42	409731			63689			4 Watts			
Y	21N	TRAFFIC SIGN	ALBION STREET	GRIMSBY	527834.21	409728			63690			3 Watts			
Y	22	TRAFFIC SIGN	ALBION STREET	GRIMSBY	527833.97	409727			65305			11 Watts			
Y	23N	TRAFFIC SIGN	ALBION STREET	GRIMSBY	527833.61	409725			63691			3 Watts			
Y	3	TRAFFIC SIGN	ALBION STREET	GRIMSBY	528019.95	410362.9			63679			7 Watts			
Y	4	TRAFFIC SIGN	ALBION STREET	GRIMSBY					67705			3 Watts			
Y	4A	TRAFFIC SIGN	ALBION STREET	GRIMSBY					67707						
Y	5	TRAFFIC SIGN	ALBION STREET	GRIMSBY					67709			4,700 Watts			
Y	6	TRAFFIC SIGN	ALBION STREET	GRIMSBY	527993.04	410244.72			63680			11 Watts			
Y	7	TRAFFIC SIGN	ALBION STREET	GRIMSBY					67706			3 Watts			
Y	7A	TRAFFIC SIGN	ALBION STREET	GRIMSBY					67708						
Y	8	TRAFFIC SIGN	ALBION STREET	GRIMSBY					67710			4,700 Watts			
Y	9	TRAFFIC SIGN	ALBION STREET	GRIMSBY	527954.96	410112			63681			11 Watts			
Y	1	TRAFFIC SIGN	BRADLEY STREET	GRIMSBY	527571.79	409502			63799			3 Watts			
Y	1	TRAFFIC SIGN	CHURCH STREET	GRIMSBY	527547.39	410262			63895			4 Watts			
Y	2	TRAFFIC SIGN	CHURCH STREET	GRIMSBY	527547.87	410252			63896			7 Watts			
Y	3	TRAFFIC SIGN	CHURCH STREET	GRIMSBY	527673.63	410244			63897			3 Watts			
Y	4	TRAFFIC SIGN	CHURCH STREET	GRIMSBY	527676.78	410254.28			63898			4 Watts			
Y	1	TRAFFIC SIGN	DUNCOMBE STREET	GRIMSBY	527658.56	409951			64063			3 Watts			
Y	2	TRAFFIC SIGN	DUNCOMBE STREET	GRIMSBY	527721.18	409945.07			64064			4 Watts			
Y	3	TRAFFIC SIGN	DUNCOMBE STREET	GRIMSBY	527802.29	409912			64065			3 Watts			
Y	4	TRAFFIC SIGN	DUNCOMBE STREET	GRIMSBY	527878.06	409908			64067			4 Watts			
Y	5	TRAFFIC SIGN	DUNCOMBE STREET	GRIMSBY	527873.69	409894			64066			4 Watts			
Y	1	TRAFFIC SIGN	EAST STREET	GRIMSBY	527200.46	409356			64088			11 Watts			
Y	2	TRAFFIC SIGN	EAST STREET	GRIMSBY	527208.48	409396.04			64089			3 Watts			
Y	1N	TRAFFIC SIGN	ELLIS WAY	GRIMSBY	527575.27	409560			64128						
Y	2	TRAFFIC SIGN	ELLIS WAY	GRIMSBY	527563.64	409562			64127			3 Watts			
Y	3	TRAFFIC SIGN	ELLIS WAY	GRIMSBY	527470.12	409575			64126			3 Watts			
Y	4	TRAFFIC SIGN	ELLIS WAY	GRIMSBY	527454.75	409577			64125			3 Watts			
Y	5	TRAFFIC SIGN	ELLIS WAY	GRIMSBY	527242.46	409564			64124			3 Watts			
Y	6	TRAFFIC SIGN	ELLIS WAY	GRIMSBY	527238.6	409550.45			64123			6 Watts			
Y	7	TRAFFIC SIGN	ELLIS WAY	GRIMSBY	527227.71	409549.04			64122			11 Watts			
Y	8	TRAFFIC SIGN	ELLIS WAY	GRIMSBY	527225.02	409561.77			64121			11 Watts			
Y	1	TRAFFIC SIGN	HOLLES STREET	GRIMSBY	527477.72	409519.86			64347			4 Watts			
Y	2	TRAFFIC SIGN	HOLLES STREET	GRIMSBY	527468.08	409520.34			64348			4 Watts			
Y	3	TRAFFIC SIGN	HOLLES STREET	GRIMSBY	527477.72	409519.86			64349			4 Watts			
Y	4	TRAFFIC SIGN	HOLLES STREET	GRIMSBY	527468.08	409520.34			64350			4 Watts			
Y	1	TRAFFIC SIGN	NACTON STREET	GRIMSBY	527956	410461			64536			3 Watts			
Y	2	TRAFFIC SIGN	NACTON STREET	GRIMSBY	527965	410460			64537			4 Watts			
Y	3	TRAFFIC SIGN	NACTON STREET	GRIMSBY	527955.81	410407.21			64538			7 Watts			
Y	4	TRAFFIC SIGN	NACTON STREET	GRIMSBY	527947.41	410408.71			64539			7 Watts			
Y	1	TRAFFIC SIGN	RAILWAY STREET	GRIMSBY	527552.89	410387			64713			11 Watts			
Y	2	TRAFFIC SIGN	RAILWAY STREET	GRIMSBY	527536.33	410218.07			64714			7 Watts			
Y	1	TRAFFIC SIGN	RIBY SQUARE	GRIMSBY	527709.34	410469.21			66407			3 Watts			
Y	2	TRAFFIC SIGN	RIBY SQUARE	GRIMSBY	527721.74	410472.98			66408			6 Watts			
Y	1	TRAFFIC SIGN	ROWLANDSON STREET	GRIMSBY	527727.1	410516			64738			11 Watts			
Y	2	TRAFFIC SIGN	ROWLANDSON STREET	GRIMSBY	527692.1	410526.3			64739			3 Watts			
Y	2A	TRAFFIC SIGN	ROWLANDSON STREET	GRIMSBY	527692.1	410526.3			64740			3 Watts			
Y	3	TRAFFIC SIGN	ROWLANDSON STREET	GRIMSBY	527671.72	410556			64741			4 Watts			
Y	1	TRAFFIC SIGN	ROBINSON STREET EAST	GRIMSBY	527347.11	409530.53			64724			4 Watts			
Y	1A	TRAFFIC SIGN	ROBINSON STREET EAST	GRIMSBY	527347.11	409530.53			64734						
Y	2	TRAFFIC SIGN	ROBINSON STREET EAST	GRIMSBY	527322.3	409470.94			64725			4 Watts			
Y	2A	TRAFFIC SIGN	ROBINSON STREET EAST	GRIMSBY	527322.3	409470.94			64732						
Y	2B	TRAFFIC SIGN	ROBINSON STREET EAST	GRIMSBY	527322.3	409470.94			64733						
Y	3	TRAFFIC SIGN	ROBINSON STREET EAST	GRIMSBY	527318.74	409419.21			64726			11 Watts			
Y	4	TRAFFIC SIGN	ROBINSON STREET EAST	GRIMSBY	527318.06	409417.94			64727			6 Watts			
Y	5	TRAFFIC SIGN	ROBINSON STREET EAST	GRIMSBY	527318.06	409417.94			64728			3 Watts			
Y	6	TRAFFIC SIGN	ROBINSON STREET EAST	GRIMSBY	527317.35	409417.14			64729			6 Watts			
Y	7	TRAFFIC SIGN	ROBINSON STREET EAST	GRIMSBY	527323.17	409414			64730			4 Watts			
Y	8	TRAFFIC SIGN	ROBINSON STREET EAST	GRIMSBY	527323.17	409414			64731			4 Watts			
Y	1	TRAFFIC SIGN	STRAND STREET	GRIMSBY	527717.39	410412			64840			3 Watts			
Y	2	TRAFFIC SIGN	STRAND STREET	GRIMSBY	527719.17	410403			64841			7 Watts			
Y	3	TRAFFIC SIGN	STRAND STREET	GRIMSBY	527936.07	410357			64842			4 Watts			
Y	4	TRAFFIC SIGN	STRAND STREET	GRIMSBY	527938.2	410365			64843			4 Watts			
Y	5	TRAFFIC SIGN	STRAND STREET	GRIMSBY	528010.11	410349.44			64844			7 Watts			
Y	6	TRAFFIC SIGN	STRAND STREET	GRIMSBY	528008.82	410341.93			64845			7 Watts			
Y	1	TRAFFIC SIGN	TOMLINE STREET	GRIMSBY	527840.34	410457			64878			6 Watts			
Y	2	TRAFFIC SIGN	TOMLINE STREET	GRIMSBY	527842.04	410462			64879			4 Watts			
Y	3	TRAFFIC SIGN	TOMLINE STREET	GRIMSBY	527842.04	410462			64880			4 Watts			
Y	4	TRAFFIC SIGN	TOMLINE STREET	GRIMSBY	527844.99	410481			64881			6 Watts			
Y	5	TRAFFIC SIGN	TOMLINE STREET	GRIMSBY	527854.92	410478			64882			6 Watts			
Y	1	TRAFFIC SIGN	WERNETH ROAD	GRIMSBY	527713.28	409922			65061			4 Watts			
Y	1	TRAFFIC SIGN	BRIDGE STREET NORTH	GRIMSBY	527950.85	410385.26			63800			7 Watts			
Y	2	TRAFFIC SIGN	BRIDGE STREET NORTH	GRIMSBY	527943.18	410387.08			63801			7 Watts			
Y	3	TRAFFIC SIGN	BRIDGE STREET NORTH	GRIMSBY	527947.66	410364.08			63802			7 Watts			
Y	4	TRAFFIC SIGN	BRIDGE STREET NORTH	GRIMSBY	527939.16	410365.53			63803			7 Watts			
Y	1	TRAFFIC SIGN	FREEMAN STREET	GRIMSBY	527706	410436			64201			4 Watts			
Y	10	TRAFFIC SIGN	FREEMAN STREET	GRIMSBY	527642.26	409885			65331			70 Watts			
Y	11	TRAFFIC SIGN	FREEMAN STREET	GRIMSBY	527631.14	409882			65332			3 Watts			
Y	12	TRAFFIC SIGN	FREEMAN STREET	GRIMSBY	527631.14	409882			65333			70 Watts			
Y	2	TRAFFIC SIGN	FREEMAN STREET	GRIMSBY	527703.94	410428			64202			4 Watts			
Y	3	TRAFFIC SIGN	FREEMAN STREET	GRIMSBY	527697.9	410322			65324			3 Watts			
Y	4	TRAFFIC SIGN	FREEMAN STREET	GRIMSBY	527686.91	410320			65325			3 Watts			
Y	5	TRAFFIC SIGN	FREEMAN STREET	GRIMSBY	527671.07	410107			65326			3 Watts			
Y	6	TRAFFIC SIGN	FREEMAN STREET	GRIMSBY	527659.49	410106			65327			3 Watts			
Y	7	TRAFFIC SIGN	FREEMAN STREET	GRIMSBY	527656.56	410011.55			65328			3 Watts			
Y	8	TRAFFIC SIGN	FREEMAN STREET	GRIMSBY	527648.12	410008.12			65329			3 Watts			
Y	9	TRAFFIC SIGN	FREEMAN STREET	GRIMSBY	527642.26	409885			65330			3 Watts			
Y	1	TRAFFIC SIGN	GARIBALDI STREET	GRIMSBY	527891.18	409979			64222			4 Watts			
Y	10	TRAFFIC SIGN	GARIBALDI STREET	GRIMSBY	527522.39	410026			64231			7 Watts			
Y	2	TRAFFIC SIGN	GARIBALDI STREET	GRIMSBY	527720.21	410005.91			68972			3 Watts			
Y	3	TRAFFIC SIGN	GARIBALDI STREET	GRIMSBY	527720.8	410016.67			64224			6 Watts			
Y	4	TRAFFIC SIGN	GARIBALDI STREET	GRIMSBY	527660.45	410013			64225			3 Watts			
Y	5	TRAFFIC SIGN	GARIBALDI STREET	GRIMSBY	527660.45	410013			64226			3 Watts			
Y	6	TRAFFIC SIGN	GARIBALDI STREET	GRIMSBY	527644.85	410017			64227			3 Watts			
Y	7	TRAFFIC SIGN	GARIBALDI STREET	GRIMSBY	527524.87	410042			64228			6 Watts			
Y	8	TRAFFIC SIGN	GARIBALDI STREET	GRIMSBY	527524.87	410042			64229			15 Watts			
Y	9	TRAFFIC SIGN	GARIBALDI STREET	GRIMSBY	527522.39	410026			64230			7 Watts			
Y	1	TRAFFIC SIGN	KENT STREET	GRIMSBY	527553.8	410338			64364			7 Watts			
Y	2	TRAFFIC SIGN	KENT STREET	GRIMSBY	527557.11	410351			64365			7 Watts			
Y	3	TRAFFIC SIGN	KENT STREET	GRIMSBY	527553.8	410338			64366			7 Watts			
Y	4	TRAFFIC SIGN	KENT STREET	GRIMSBY	527686.07	410333			64367			11 Watts			
Y	5	TRAFFIC SIGN	KENT STREET	GRIMSBY	527687.84	410343			64368			3 Watts			
Y	6	TRAFFIC SIGN	KENT STREET	GRIMSBY					68605			3 Watts			
Y	6A	TRAFFIC SIGN	KENT STREET	GRIMSBY					68606						
Y	7	TRAFFIC SIGN	KENT STREET	GRIMSBY					68607			4,700 Watts			
Y	1	TRAFFIC SIGN	NELSON STREET	GRIMSBY	527532.63	410119			64540			7 Watts			
Y	2	TRAFFIC SIGN	NELSON STREET	GRIMSBY	527532.04	410107			64541			3 Watts			
Y	3	TRAFFIC SIGN	NELSON STREET	GRIMSBY	527654.14	410093			64542			3 Watts			

Y	4	TRAFFIC SIGN	NELSON STREET	GRIMSBY	527655.68	410104			64543			3 Watts			
Y	5	TRAFFIC SIGN	NELSON STREET	GRIMSBY	527675.18	410101			64544			3 Watts			
Y	6	TRAFFIC SIGN	NELSON STREET	GRIMSBY	527735.59	410094			64545			4 Watts			
Y	7	TRAFFIC SIGN	NELSON STREET	GRIMSBY	527732.15	410082			64546			11 Watts			
Y	1	TRAFFIC SIGN	THESIGER STREET	GRIMSBY	527726.88	410018			66280			11 Watts			
Y	2	TRAFFIC SIGN	THESIGER STREET	GRIMSBY	527742.37	410015			66281			11 Watts			
Y	3	TRAFFIC SIGN	THESIGER STREET	GRIMSBY	527746.27	410075			66282			6 Watts			
Y	4	TRAFFIC SIGN	THESIGER STREET	GRIMSBY	527735.87	410077			66283			4 Watts			
Y	1	TRAFFIC SIGN	CLEETHORPE ROAD	GRIMSBY	527680.5	410443			63907			11 Watts			
Y	10	TRAFFIC SIGN	CLEETHORPE ROAD	GRIMSBY	527955.04	410394.63			63911			11 Watts			
Y	11	TRAFFIC SIGN	CLEETHORPE ROAD	GRIMSBY	527962.03	410393.52			63912			11 Watts			
Y	12	TRAFFIC SIGN	CLEETHORPE ROAD	GRIMSBY	528049.59	410374.64			63913			11 Watts			
Y	13	TRAFFIC SIGN	CLEETHORPE ROAD	GRIMSBY	528056.9	410372.78			63914			11 Watts			
Y	14	TRAFFIC SIGN	CLEETHORPE ROAD	GRIMSBY	528155.81	410360.97			63915			3 Watts			
Y	15	TRAFFIC SIGN	CLEETHORPE ROAD	GRIMSBY	528176.62	410337.68			63917			11 Watts			
Y	16	TRAFFIC SIGN	CLEETHORPE ROAD	GRIMSBY	528176.44	410346.19			63916			3 Watts			
Y	17	TRAFFIC SIGN	CLEETHORPE ROAD	GRIMSBY	528186.49	410343.85			63918			3 Watts			
Y	18	TRAFFIC SIGN	CLEETHORPE ROAD	GRIMSBY	528217.76	410339			63919			11 Watts			
Y	19	TRAFFIC SIGN	CLEETHORPE ROAD	GRIMSBY	528259.72	410328			63920			6 Watts			
Y	19A	TRAFFIC SIGN	CLEETHORPE ROAD	GRIMSBY	528259.72	410328			63921						
Y	2	TRAFFIC SIGN	CLEETHORPE ROAD	GRIMSBY	527699.44	410448			63908			4 Watts			
Y	20	TRAFFIC SIGN	CLEETHORPE ROAD	GRIMSBY	528265.68	410314			63922			6 Watts			
Y	21	TRAFFIC SIGN	CLEETHORPE ROAD	GRIMSBY	528409.93	410266			63923			4 Watts			
Y	21A	TRAFFIC SIGN	CLEETHORPE ROAD	GRIMSBY	528409.93	410266			63924						
Y	22	TRAFFIC SIGN	CLEETHORPE ROAD	GRIMSBY	528409.93	410266			63925			11 Watts			
Y	22A	TRAFFIC SIGN	CLEETHORPE ROAD	GRIMSBY	528409.93	410266			63926						
Y	23	TRAFFIC SIGN	CLEETHORPE ROAD	GRIMSBY	528546.46	410200.14			66414			11 Watts			
Y	24	TRAFFIC SIGN	CLEETHORPE ROAD	GRIMSBY	528610.21	410169			63927			3 Watts			
Y	24A	TRAFFIC SIGN	CLEETHORPE ROAD	GRIMSBY	528610.21	410169			63928						
Y	25	TRAFFIC SIGN	CLEETHORPE ROAD	GRIMSBY	528640.71	410154.42			63929			6 Watts			
Y	26	TRAFFIC SIGN	CLEETHORPE ROAD	GRIMSBY	528727.75	410125			63930			11 Watts			
Y	27	TRAFFIC SIGN	CLEETHORPE ROAD	GRIMSBY	528772.07	410089			63931						
Y	3N	TRAFFIC SIGN	CLEETHORPE ROAD	GRIMSBY	527703.73	410458.55			66402			4 Watts			
Y	4N	TRAFFIC SIGN	CLEETHORPE ROAD	GRIMSBY					66403			4 Watts			
Y	5	TRAFFIC SIGN	CLEETHORPE ROAD	GRIMSBY					66404			4 Watts			
Y	6N	TRAFFIC SIGN	CLEETHORPE ROAD	GRIMSBY					66405			4 Watts			
Y	7N	TRAFFIC SIGN	CLEETHORPE ROAD	GRIMSBY					66406						
Y	8	TRAFFIC SIGN	CLEETHORPE ROAD	GRIMSBY	527916.41	410402.99			63909			11 Watts			
Y	9	TRAFFIC SIGN	CLEETHORPE ROAD	GRIMSBY	527926.55	410400.98			63910			11 Watts			
Y	1	TRAFFIC SIGN	HAMILTON STREET	GRIMSBY	528754.47	410033			64309			7 Watts			
Y	10N	TRAFFIC SIGN	CROMWELL ROAD	GRIMSBY					67939						
Y	11	TRAFFIC SIGN	CROMWELL ROAD	GRIMSBY	525069.07	409740			65317			36 Watts			
Y	12N	TRAFFIC SIGN	CROMWELL ROAD	GRIMSBY					67940						
Y	13	TRAFFIC SIGN	CROMWELL ROAD	GRIMSBY	524972.95	409767			64011			14 Watts			
Y	14	TRAFFIC SIGN	CROMWELL ROAD	GRIMSBY	524926.62	409790.02			64018			7 Watts			
Y	15N	TRAFFIC SIGN	CROMWELL ROAD	GRIMSBY					67941						
Y	16N	TRAFFIC SIGN	CROMWELL ROAD	GRIMSBY					67942						
Y	17N	TRAFFIC SIGN	CROMWELL ROAD	GRIMSBY	524879.18	409805.92			64021						
Y	18N	TRAFFIC SIGN	CROMWELL ROAD	GRIMSBY	524873.8	409808.02			64022						
Y	19N	TRAFFIC SIGN	CROMWELL ROAD	GRIMSBY					69779						
Y	1N	TRAFFIC SIGN	CROMWELL ROAD	GRIMSBY	525711.71	409400			64007						
Y	20N	TRAFFIC SIGN	CROMWELL ROAD	GRIMSBY					69780						
Y	21N	TRAFFIC SIGN	CROMWELL ROAD	GRIMSBY	524823.82	409816.22			68919						
Y	22N	TRAFFIC SIGN	CROMWELL ROAD	GRIMSBY	524817.77	409817.23			69130						
Y	23	TRAFFIC SIGN	CROMWELL ROAD	GRIMSBY	524788.13	409833.99			64027			7 Watts			
Y	24N	TRAFFIC SIGN	CROMWELL ROAD	GRIMSBY					67943						
Y	25	TRAFFIC SIGN	CROMWELL ROAD	GRIMSBY	524655.1	409852			65318			11 Watts			
Y	26N	TRAFFIC SIGN	CROMWELL ROAD	GRIMSBY					67944						
Y	27N	TRAFFIC SIGN	CROMWELL ROAD	GRIMSBY					67945						
Y	28	TRAFFIC SIGN	CROMWELL ROAD	GRIMSBY	524576.14	409868			65319			36 Watts			
Y	29N	TRAFFIC SIGN	CROMWELL ROAD	GRIMSBY					67946						
Y	2N	TRAFFIC SIGN	CROMWELL ROAD	GRIMSBY	525709.15	409402			64009						
Y	30N	TRAFFIC SIGN	CROMWELL ROAD	GRIMSBY	524329.38	409923			64032						
Y	31	TRAFFIC SIGN	CROMWELL ROAD	GRIMSBY	524324.77	409924			64033						
Y	32	TRAFFIC SIGN	CROMWELL ROAD	GRIMSBY					66946			3 Watts			
Y	32A	TRAFFIC SIGN	CROMWELL ROAD	GRIMSBY					66950						
Y	33	TRAFFIC SIGN	CROMWELL ROAD	GRIMSBY	523974.91	410029.99			66954			4,700 Watts			
Y	34	TRAFFIC SIGN	CROMWELL ROAD	GRIMSBY					66947			3 Watts			
Y	34A	TRAFFIC SIGN	CROMWELL ROAD	GRIMSBY					66951						
Y	35	TRAFFIC SIGN	CROMWELL ROAD	GRIMSBY	523928.68	410118			64034			3 Watts			
Y	35A	TRAFFIC SIGN	CROMWELL ROAD	GRIMSBY	523928.68	410118			64035						
Y	35B	TRAFFIC SIGN	CROMWELL ROAD	GRIMSBY	523928.68	410118			64036						
Y	36	TRAFFIC SIGN	CROMWELL ROAD	GRIMSBY					66948			3 Watts			
Y	36A	TRAFFIC SIGN	CROMWELL ROAD	GRIMSBY					66952						
Y	37	TRAFFIC SIGN	CROMWELL ROAD	GRIMSBY	523931.41	410125.67			66955			4,700 Watts			
Y	38	TRAFFIC SIGN	CROMWELL ROAD	GRIMSBY					66949			3 Watts			
Y	38A	TRAFFIC SIGN	CROMWELL ROAD	GRIMSBY					66953						
Y	39	TRAFFIC SIGN	CROMWELL ROAD	GRIMSBY	523941.56	410124.29			66956			4,700 Watts			
Y	3N	TRAFFIC SIGN	CROMWELL ROAD	GRIMSBY					68110						
Y	4N	TRAFFIC SIGN	CROMWELL ROAD	GRIMSBY					68111						
Y	5N	TRAFFIC SIGN	CROMWELL ROAD	GRIMSBY	525276.39	409629.95			64014						
Y	6	TRAFFIC SIGN	CROMWELL ROAD	GRIMSBY	525275.61	409630.39			65316			11 Watts			
Y	7N	TRAFFIC SIGN	CROMWELL ROAD	GRIMSBY	525272.27	409632.21			64015						
Y	8N	TRAFFIC SIGN	CROMWELL ROAD	GRIMSBY					67937						
Y	9N	TRAFFIC SIGN	CROMWELL ROAD	GRIMSBY					67938						
Y	1N	TRAFFIC SIGN	CENTRAL PARADE	GRIMSBY					69051						
Y	2	TRAFFIC SIGN	CENTRAL PARADE	GRIMSBY	524948.84	408957.16			63874			49 Watts			
Y	3N	TRAFFIC SIGN	CENTRAL PARADE	GRIMSBY					69225						
Y	1	TRAFFIC SIGN	CHERRY TREE CRESCENT	GRIMSBY	524543.81	409100			63888			11 Watts			
Y	2	TRAFFIC SIGN	CHERRY TREE CRESCENT	GRIMSBY	524537.09	409101			63889			11 Watts			
Y	3	TRAFFIC SIGN	CHERRY TREE CRESCENT	GRIMSBY	524536.76	409097			63890			11 Watts			
Y	1N	TRAFFIC SIGN	CROSS COATES ROAD	GRIMSBY					67925						
Y	2N	TRAFFIC SIGN	CROSS COATES ROAD	GRIMSBY					67926						
Y	3	TRAFFIC SIGN	CROSS COATES ROAD	GRIMSBY	525258.28	408983			64047			11 Watts			
Y	4	TRAFFIC SIGN	CROSS COATES ROAD	GRIMSBY	525500.59	408907.25			64048			7 Watts			
Y	1	TRAFFIC SIGN	RICHMOND ROAD	GRIMSBY	525434.05	408916			64721			7 Watts			
Y	1	TRAFFIC SIGN	ROSEVEARE AVENUE	GRIMSBY	525460.97	409518			64736			4 Watts			
Y	2	TRAFFIC SIGN	ROSEVEARE AVENUE	GRIMSBY	525470.26	409513			64737			4 Watts			
Y	1	TRAFFIC SIGN	SPRING BANK	GRIMSBY	525411.63	409379			64810			4 Watts			
Y	2	TRAFFIC SIGN	SPRING BANK	GRIMSBY	525388.93	409402			64811			4 Watts			
Y	10	TRAFFIC SIGN	YARBOROUGH ROAD	GRIMSBY					67349			4,700 Watts			
Y	11N	TRAFFIC SIGN	YARBOROUGH ROAD	GRIMSBY	524643.81	408894			65293						
Y	12N	TRAFFIC SIGN	YARBOROUGH ROAD	GRIMSBY	524638.28	408889			65294						
Y	1N	TRAFFIC SIGN	YARBOROUGH ROAD	GRIMSBY					69784						
Y	2N	TRAFFIC SIGN	YARBOROUGH ROAD	GRIMSBY					69787						
Y	3	TRAFFIC SIGN	YARBOROUGH ROAD	GRIMSBY	525112.14	408943			65286			4 Watts			
Y	4N	TRAFFIC SIGN	YARBOROUGH ROAD	GRIMSBY					68005						
Y	5	TRAFFIC SIGN	YARBOROUGH ROAD	GRIMSBY	525073	408939			65371			36 Watts			
Y	6N	TRAFFIC SIGN	YARBOROUGH ROAD	GRIMSBY					68006						
Y	7	TRAFFIC SIGN	YARBOROUGH ROAD	GRIMSBY	525007.32	408913			65289			3 Watts			

Y	7A	TRAFFIC SIGN	YARBOROUGH ROAD	GRIMSBY	525007.32	408913			65290						
Y	8	TRAFFIC SIGN	YARBOROUGH ROAD	GRIMSBY					67348			4,700 Watts			
Y	9	TRAFFIC SIGN	YARBOROUGH ROAD	GRIMSBY	524852.67	408991			65291			3 Watts			
Y	9A	TRAFFIC SIGN	YARBOROUGH ROAD	GRIMSBY	524852.67	408991			65292						
Y	1N	TRAFFIC SIGN	YARROW ROAD	GRIMSBY	524882.18	408986.47			65295						
Y	2	TRAFFIC SIGN	YARROW ROAD	GRIMSBY	524882.9	408989.16			65296			49 Watts			
Y	3N	TRAFFIC SIGN	YARROW ROAD	GRIMSBY	524883.29	408991.97			65297						
Y	1	TRAFFIC SIGN	ANDERSON STREET	GRIMSBY	526534.15	409423			63715			4 Watts			
Y	1N	TRAFFIC SIGN	BOULEVARD AVENUE	GRIMSBY					69785						
Y	2N	TRAFFIC SIGN	BOULEVARD AVENUE	GRIMSBY					69786						
Y	3	TRAFFIC SIGN	BOULEVARD AVENUE	GRIMSBY	525814.54	409559			63781			7 Watts			
Y	3A	TRAFFIC SIGN	BOULEVARD AVENUE	GRIMSBY	525814.54	409559			63782						
Y	4	TRAFFIC SIGN	BOULEVARD AVENUE	GRIMSBY					66966			4,700 Watts			
Y	5	TRAFFIC SIGN	BOULEVARD AVENUE	GRIMSBY	525910.87	409656			63783			7 Watts			
Y	5A	TRAFFIC SIGN	BOULEVARD AVENUE	GRIMSBY	525910.87	409656			63784						
Y	6	TRAFFIC SIGN	BOULEVARD AVENUE	GRIMSBY					66967			4,700 Watts			
Y	7N	TRAFFIC SIGN	BOULEVARD AVENUE	GRIMSBY	526035.19	409961.71			63785						
Y	8	TRAFFIC SIGN	BOULEVARD AVENUE	GRIMSBY	526035.66	409964.01			63786			3 Watts			
Y	9	TRAFFIC SIGN	BOULEVARD AVENUE	GRIMSBY	526041.42	410018.49			63787			4 Watts			
Y	1	TRAFFIC SIGN	CHANTRY LANE	GRIMSBY	526516.52	409240.33			63876			3 Watts			
Y	2	TRAFFIC SIGN	CHANTRY LANE	GRIMSBY	526520.03	409250.75			69052			3 Watts			
Y	3	TRAFFIC SIGN	CHANTRY LANE	GRIMSBY	526392.03	409280.54			69054			3 Watts			
Y	4	TRAFFIC SIGN	CHANTRY LANE	GRIMSBY	526426.71	409296.12			69055			3 Watts			
Y	1	TRAFFIC SIGN	CRESCENT STREET	GRIMSBY	526444.96	409367.78			69057			3 Watts			
Y	2	TRAFFIC SIGN	CRESCENT STREET	GRIMSBY	526441.55	409359.66			69058			3 Watts			
Y	3	TRAFFIC SIGN	CRESCENT STREET	GRIMSBY	526556.92	409332.36			68783			3 Watts			
Y	4	TRAFFIC SIGN	CRESCENT STREET	GRIMSBY	526552.86	409323.14			69053			3 Watts			
Y	1	TRAFFIC SIGN	DOVER STREET	GRIMSBY	526483.42	409507.58			69059			3 Watts			
Y	2	TRAFFIC SIGN	DOVER STREET	GRIMSBY	526487.21	409516.43			69060			3 Watts			
Y	3	TRAFFIC SIGN	DOVER STREET	GRIMSBY	526409.27	409593.62			69056			3 Watts			
Y	1	TRAFFIC SIGN	EARL STREET	GRIMSBY	526442.21	409398			64077			11 Watts			
Y	1A	TRAFFIC SIGN	EARL STREET	GRIMSBY	526442.21	409398			64078						
Y	2N	TRAFFIC SIGN	EARL STREET	GRIMSBY	526458.29	409415			64079						
Y	3	TRAFFIC SIGN	EARL STREET	GRIMSBY	526458.76	409416			65322			11 Watts			
Y	4N	TRAFFIC SIGN	EARL STREET	GRIMSBY	526459.82	409419			64080						
Y	5	TRAFFIC SIGN	EARL STREET	GRIMSBY	526455.57	409422			64081			6 Watts			
Y	6	TRAFFIC SIGN	EARL STREET	GRIMSBY	526473.06	409436			64082			4 Watts			
Y	7N	TRAFFIC SIGN	EARL STREET	GRIMSBY	526469.04	409440			64083						
Y	8	TRAFFIC SIGN	EARL STREET	GRIMSBY	526470.11	409442.23			65323			11 Watts			
Y	9N	TRAFFIC SIGN	EARL STREET	GRIMSBY	526470.25	409443			64084						
Y	1	TRAFFIC SIGN	HAYCROFT STREET	GRIMSBY	526203.35	409662			64311			3 Watts			
Y	1	TRAFFIC SIGN	LORD STREET	GRIMSBY					68760			3 Watts			
Y	1A	TRAFFIC SIGN	LORD STREET	GRIMSBY					68761						
Y	2	TRAFFIC SIGN	LORD STREET	GRIMSBY					68759			4,700 Watts			
Y	3	TRAFFIC SIGN	LORD STREET	GRIMSBY	526002.84	409802.76			66559			4 Watts			
Y	1	TRAFFIC SIGN	NEW CARTERGATE	GRIMSBY	526599.63	409404.59			64548			3 Watts			
Y	1	TRAFFIC SIGN	CARTERGATE	GRIMSBY					68756			3 Watts			
Y	10N	TRAFFIC SIGN	CARTERGATE	GRIMSBY					67347			4 Watts			
Y	11	TRAFFIC SIGN	CARTERGATE	GRIMSBY	526497.02	409137.69			63861			7 Watts			
Y	12	TRAFFIC SIGN	CARTERGATE	GRIMSBY	526471.53	409087			63862			7 Watts			
Y	13	TRAFFIC SIGN	CARTERGATE	GRIMSBY	526469.11	409072			63863			4 Watts			
Y	13A	TRAFFIC SIGN	CARTERGATE	GRIMSBY	526469.11	409072			63864						
Y	14	TRAFFIC SIGN	CARTERGATE	GRIMSBY	526478.57	409055			63865			3 Watts			
Y	15	TRAFFIC SIGN	CARTERGATE	GRIMSBY	526478.57	409055			63866			3 Watts			
Y	16	TRAFFIC SIGN	CARTERGATE	GRIMSBY	526480.94	409021			63867			7 Watts			
Y	17	TRAFFIC SIGN	CARTERGATE	GRIMSBY	526493.35	409020			63868			7 Watts			
Y	18	TRAFFIC SIGN	CARTERGATE	GRIMSBY	526486.85	409009			63869			11 Watts			
Y	19	TRAFFIC SIGN	CARTERGATE	GRIMSBY	526488.86	409003.85			63870			11 Watts			
Y	1A	TRAFFIC SIGN	CARTERGATE	GRIMSBY					68757						
Y	2	TRAFFIC SIGN	CARTERGATE	GRIMSBY	526569.88	409361.62			68758			4,700 Watts			
Y	20	TRAFFIC SIGN	CARTERGATE	GRIMSBY	526483.37	409006.04			63871			11 Watts			
Y	3	TRAFFIC SIGN	CARTERGATE	GRIMSBY	526508.87	409181.39			63860			4 Watts			
Y	4	TRAFFIC SIGN	CARTERGATE	GRIMSBY					67325			4 Watts			
Y	5	TRAFFIC SIGN	CARTERGATE	GRIMSBY	526560.02	409336			63856			3 Watts			
Y	6	TRAFFIC SIGN	CARTERGATE	GRIMSBY	526509.34	409186.44			63858			3 Watts			
Y	7	TRAFFIC SIGN	CARTERGATE	GRIMSBY					67323			3 Watts			
Y	8	TRAFFIC SIGN	CARTERGATE	GRIMSBY	526509.34	409186.44			63859			3 Watts			
Y	9	TRAFFIC SIGN	CARTERGATE	GRIMSBY					67324			3 Watts			
Y	1	TRAFFIC SIGN	GUILDFORD STREET	GRIMSBY	528177.04	410030.69			64296			6 Watts			
Y	2	TRAFFIC SIGN	GUILDFORD STREET	GRIMSBY	528162.97	410034.81			64295			3 Watts			
Y	3	TRAFFIC SIGN	GUILDFORD STREET	GRIMSBY	528131.91	409895.05			64294			3 Watts			
Y	4	TRAFFIC SIGN	GUILDFORD STREET	GRIMSBY	528121.61	409898.39			64293			3 Watts			
Y	1	TRAFFIC SIGN	ORCHARD DRIVE	GRIMSBY	528035.28	409656.49			64580			3 Watts			
Y	2	TRAFFIC SIGN	ORCHARD DRIVE	GRIMSBY	528127.31	409879.81			64581			3 Watts			
Y	1	TRAFFIC SIGN	ROBERTS STREET	GRIMSBY	528491.81	409345			64722			3 Watts			
Y	2	TRAFFIC SIGN	ROBERTS STREET	GRIMSBY	528490.62	409326			64723			7 Watts			
Y	1N	TRAFFIC SIGN	VICTOR STREET	GRIMSBY	528112.2	410067.27			64901						
Y	2N	TRAFFIC SIGN	VICTOR STREET	GRIMSBY	528110.89	410063.59			64902						
Y	3N	TRAFFIC SIGN	VICTOR STREET	GRIMSBY	528106.69	410049.94			64903						
Y	4N	TRAFFIC SIGN	VICTOR STREET	GRIMSBY	528104.59	410044.95			64904						
Y	1	TRAFFIC SIGN	RUTLAND STREET	GRIMSBY	528633.89	410144.34			64749			11 Watts			
Y	2	TRAFFIC SIGN	RUTLAND STREET	GRIMSBY	528638.26	410142.31			64750			11 Watts			
Y	3	TRAFFIC SIGN	RUTLAND STREET	GRIMSBY	528519.44	409908			64751			3 Watts			
Y	1	TRAFFIC SIGN	STANLEY STREET	GRIMSBY	528400.18	409984			64834			4 Watts			
Y	2	TRAFFIC SIGN	STANLEY STREET	GRIMSBY	528377.49	409954			64835			11 Watts			
Y	3	TRAFFIC SIGN	STANLEY STREET	GRIMSBY	528278.61	409580			64836			4 Watts			
Y	5	TRAFFIC SIGN	STANLEY STREET	GRIMSBY	528248.12	409479			64838			6 Watts			
Y	6	TRAFFIC SIGN	STANLEY STREET	GRIMSBY	528221.64	409406			64839			4 Watts			
Y	1	TRAFFIC SIGN	WEELSBY STREET	GRIMSBY	528422.96	410281			65007			3 Watts			
Y	1A	TRAFFIC SIGN	WEELSBY STREET	GRIMSBY	528422.96	410281			65013						
Y	2	TRAFFIC SIGN	WEELSBY STREET	GRIMSBY	528397.78	410250			65008			6 Watts			
Y	2A	TRAFFIC SIGN	WEELSBY STREET	GRIMSBY	528397.78	410250			65014						
Y	3	TRAFFIC SIGN	WEELSBY STREET	GRIMSBY	528291.76	410005			65009			7 Watts			
Y	4	TRAFFIC SIGN	WEELSBY STREET	GRIMSBY	528145.15	409624			65010			4 Watts			
Y	5	TRAFFIC SIGN	WEELSBY STREET	GRIMSBY	528130.26	409612			65011			4 Watts			
Y	6	TRAFFIC SIGN	WEELSBY STREET	GRIMSBY	528093.69	409463.32			65012			3 Watts			
Y	1	TRAFFIC SIGN	WELLINGTON STREET	GRIMSBY	527732.21	409736			65039			4 Watts			
Y	10	TRAFFIC SIGN	WELLINGTON STREET	GRIMSBY	528382.31	409545			65359			70 Watts			
Y	11	TRAFFIC SIGN	WELLINGTON STREET	GRIMSBY	528383.49	409535			65360			70 Watts			
Y	12	TRAFFIC SIGN	WELLINGTON STREET	GRIMSBY	528383.49	409535			65361			70 Watts			
Y	14	TRAFFIC SIGN	WELLINGTON STREET	GRIMSBY	528662.16	409456.65			65050			11 Watts			
Y	14A	TRAFFIC SIGN	WELLINGTON STREET	GRIMSBY	528662.16	409456.65			65051						
Y	15	TRAFFIC SIGN	WELLINGTON STREET	GRIMSBY	528660.67	409445.95			65052			11 Watts			
Y	15A	TRAFFIC SIGN	WELLINGTON STREET	GRIMSBY	528660.67	409445.95			65053						
Y	16N	TRAFFIC SIGN	WELLINGTON STREET	GRIMSBY					69050						
Y	1A	TRAFFIC SIGN	WELLINGTON STREET	GRIMSBY	527732.21	409736			65040						
Y	2N	TRAFFIC SIGN	WELLINGTON STREET	GRIMSBY	527815.31	409720			65041						
Y	3N	TRAFFIC SIGN	WELLINGTON STREET	GRIMSBY	527819.21	409720			65042						
Y	4	TRAFFIC SIGN	WELLINGTON STREET	GRIMSBY	527941.08	409677			65043			4 Watts			
Y	4A	TRAFFIC SIGN	WELLINGTON STREET	GRIMSBY	527941.08	409677			65044						

Y	5	TRAFFIC SIGN	WELLINGTON STREET	GRIMSBY	527983.48	409674.06			65045			11 Watts			
Y	5A	TRAFFIC SIGN	WELLINGTON STREET	GRIMSBY	527983.48	409674.06			65046						
Y	6	TRAFFIC SIGN	WELLINGTON STREET	GRIMSBY	527979.16	409663.13			65047			11 Watts			
Y	6A	TRAFFIC SIGN	WELLINGTON STREET	GRIMSBY	527979.16	409663.13			65048						
Y	9	TRAFFIC SIGN	WELLINGTON STREET	GRIMSBY	528382.31	409545			65358			70 Watts			
Y	1	TRAFFIC SIGN	OXFORD STREET	GRIMSBY	528679.4	409882.9			64584			11 Watts			
Y	2	TRAFFIC SIGN	OXFORD STREET	GRIMSBY	528675.87	409877.59			64587			6 Watts			
Y	3	TRAFFIC SIGN	OXFORD STREET	GRIMSBY	528674.7	409878.4			64586			49 Watts			
Y	4	TRAFFIC SIGN	OXFORD STREET	GRIMSBY	528672.58	409879.53			64585			6 Watts			
Y	5	TRAFFIC SIGN	OXFORD STREET	GRIMSBY	528509.1	409924.58			65351			3 Watts			
Y	6	TRAFFIC SIGN	OXFORD STREET	GRIMSBY	528509.1	409924.58			65352			70 Watts			
Y	7	TRAFFIC SIGN	OXFORD STREET	GRIMSBY	528509.37	409932.83			65349			3 Watts			
Y	8	TRAFFIC SIGN	OXFORD STREET	GRIMSBY	528509.37	409932.83			65350			70 Watts			
Y	1	TRAFFIC SIGN	ABBEY WALK	GRIMSBY	526977.53	409295			63654			6 Watts			
Y	2	TRAFFIC SIGN	ABBEY WALK	GRIMSBY	527006.07	409231			63655			4 Watts			
Y	3	TRAFFIC SIGN	ABBEY WALK	GRIMSBY	527007.96	409181			63656			6 Watts			
Y	3A	TRAFFIC SIGN	ABBEY WALK	GRIMSBY	527007.96	409181			63657						
Y	1	TRAFFIC SIGN	BARGATE	GRIMSBY	526495.06	408976.35			63737			6 Watts			
Y	10	TRAFFIC SIGN	BARGATE	GRIMSBY	526527.49	408333			63747						
Y	11	TRAFFIC SIGN	BARGATE	GRIMSBY	526550.96	408264			63748			4 Watts			
Y	11A	TRAFFIC SIGN	BARGATE	GRIMSBY	526550.96	408264			63749						
Y	12	TRAFFIC SIGN	BARGATE	GRIMSBY	526546.66	408225			63750			4 Watts			
Y	12A	TRAFFIC SIGN	BARGATE	GRIMSBY	526546.66	408225			63751						
Y	13	TRAFFIC SIGN	BARGATE	GRIMSBY	526563.34	408214			63752			4 Watts			
Y	13A	TRAFFIC SIGN	BARGATE	GRIMSBY	526563.34	408214			63753						
Y	14	TRAFFIC SIGN	BARGATE	GRIMSBY	526566.17	408029			63754						
Y	15	TRAFFIC SIGN	BARGATE	GRIMSBY	526565.53	408016			63755						
Y	16	TRAFFIC SIGN	BARGATE	GRIMSBY	526559.57	408016			63756			3 Watts			
Y	17	TRAFFIC SIGN	BARGATE	GRIMSBY	526562.34	408008			63757						
Y	18	TRAFFIC SIGN	BARGATE	GRIMSBY	526554.54	407999			63758						
Y	19	TRAFFIC SIGN	BARGATE	GRIMSBY	526562.27	407995			63759						
Y	2	TRAFFIC SIGN	BARGATE	GRIMSBY	526491.64	408967.05			63738			6 Watts			
Y	20	TRAFFIC SIGN	BARGATE	GRIMSBY	526572.27	407998			63760						
Y	4	TRAFFIC SIGN	BARGATE	GRIMSBY	526474.52	408604			63741			4 Watts			
Y	5	TRAFFIC SIGN	BARGATE	GRIMSBY	526506.65	408464			63742			3 Watts			
Y	6N	TRAFFIC SIGN	BARGATE	GRIMSBY					68007						
Y	7	TRAFFIC SIGN	BARGATE	GRIMSBY	526508.02	408438			63744			4 Watts			
Y	8N	TRAFFIC SIGN	BARGATE	GRIMSBY					68008						
Y	9	TRAFFIC SIGN	BARGATE	GRIMSBY	526526.12	408338			63746			3 Watts			
Y	1	TRAFFIC SIGN	BRIGHOWGATE	GRIMSBY	526689.62	409058			63804			4 Watts			
Y	1A	TRAFFIC SIGN	BRIGHOWGATE	GRIMSBY	526689.62	409058			63805						
Y	2N	TRAFFIC SIGN	BRIGHOWGATE	GRIMSBY					68009						
Y	3N	TRAFFIC SIGN	BRIGHOWGATE	GRIMSBY					68010						
Y	4	TRAFFIC SIGN	BRIGHOWGATE	GRIMSBY	526473.78	408676			63808			4 Watts			
Y	1	TRAFFIC SIGN	DEANSGATE	GRIMSBY	526558.51	409101			64049			4 Watts			
Y	10	TRAFFIC SIGN	DOUGHTY ROAD	GRIMSBY	526998.99	408987.64			64060			6 Watts			
Y	11	TRAFFIC SIGN	DOUGHTY ROAD	GRIMSBY	526994.71	408986.96			64061			11 Watts			
Y	12	TRAFFIC SIGN	DOUGHTY ROAD	GRIMSBY	526997.09	408975.23			64062			4 Watts			
Y	1N	TRAFFIC SIGN	DOUGHTY ROAD	GRIMSBY	527045.02	409315.99			64050						
Y	2	TRAFFIC SIGN	DOUGHTY ROAD	GRIMSBY	527045.02	409314.98			64051			6 Watts			
Y	3	TRAFFIC SIGN	DOUGHTY ROAD	GRIMSBY	527053.93	409305			64052			6 Watts			
Y	4N	TRAFFIC SIGN	DOUGHTY ROAD	GRIMSBY	527044.83	409310.94			64053						
Y	5	TRAFFIC SIGN	DOUGHTY ROAD	GRIMSBY	527079.02	409221			64055			3 Watts			
Y	6	TRAFFIC SIGN	DOUGHTY ROAD	GRIMSBY	527083.67	409210			64056			3 Watts			
Y	7	TRAFFIC SIGN	DOUGHTY ROAD	GRIMSBY	527081.77	409120			64057			4 Watts			
Y	8	TRAFFIC SIGN	DOUGHTY ROAD	GRIMSBY	527057.44	408999.58			68637			3 Watts			
Y	9	TRAFFIC SIGN	DOUGHTY ROAD	GRIMSBY	527010.25	408997			64058			6 Watts			
Y	9A	TRAFFIC SIGN	DOUGHTY ROAD	GRIMSBY	527010.25	408997			64059						
Y	1	TRAFFIC SIGN	EAST ST MARYS GATE	GRIMSBY	526888.07	409285			64086			6 Watts			
Y	2	TRAFFIC SIGN	EAST ST MARYS GATE	GRIMSBY	526880.86	409285			64087			6 Watts			
Y	1	TRAFFIC SIGN	GARDEN STREET	GRIMSBY	526991.33	408994			64209			3 Watts			
Y	10	TRAFFIC SIGN	GARDEN STREET	GRIMSBY	526872.7	409264			64218			6 Watts			
Y	11	TRAFFIC SIGN	GARDEN STREET	GRIMSBY	526863.07	409261			64219			6 Watts			
Y	2	TRAFFIC SIGN	GARDEN STREET	GRIMSBY	526990	409014			64210			4 Watts			
Y	3	TRAFFIC SIGN	GARDEN STREET	GRIMSBY	526987.38	409035			64211			3 Watts			
Y	4	TRAFFIC SIGN	GARDEN STREET	GRIMSBY	526966.23	409103			64212			4 Watts			
Y	4A	TRAFFIC SIGN	GARDEN STREET	GRIMSBY	526966.23	409103			64220						
Y	5	TRAFFIC SIGN	GARDEN STREET	GRIMSBY	526928.06	409179			64213			4 Watts			
Y	5A	TRAFFIC SIGN	GARDEN STREET	GRIMSBY	526928.06	409179			64221						
Y	6	TRAFFIC SIGN	GARDEN STREET	GRIMSBY	526910.52	409210			64214			4 Watts			
Y	7	TRAFFIC SIGN	GARDEN STREET	GRIMSBY	526899.35	409210			64215			4 Watts			
Y	8	TRAFFIC SIGN	GARDEN STREET	GRIMSBY	526904.68	409217			64216			4 Watts			
Y	9	TRAFFIC SIGN	GARDEN STREET	GRIMSBY	526904.68	409217			64217			4 Watts			
Y	1	TRAFFIC SIGN	GEORGE STREET	GRIMSBY	527007.09	409328.67			64241			3 Watts			
Y	1A	TRAFFIC SIGN	GEORGE STREET	GRIMSBY	527007.09	409328.67			64242						
Y	2	TRAFFIC SIGN	GEORGE STREET	GRIMSBY	526999.24	409327.42			64243			3 Watts			
Y	2A	TRAFFIC SIGN	GEORGE STREET	GRIMSBY	526999.24	409327.42			64244						
Y	1	TRAFFIC SIGN	B AND Q ENTRANCE	GRIMSBY	527286.09	409115.01			63735			3 Watts			
Y	2N	TRAFFIC SIGN	B AND Q ENTRANCE	GRIMSBY	527288.73	409115.63			69942						
Y	1	TRAFFIC SIGN	RAILWAY TERRACE	GRIMSBY					68608			4 Watts			
Y	1A	TRAFFIC SIGN	RAILWAY TERRACE	GRIMSBY					68609						
Y	1	TRAFFIC SIGN	WELLOWGATE	GRIMSBY	526689.26	409131			65055			4 Watts			
Y	1A	TRAFFIC SIGN	WELLOWGATE	GRIMSBY	526689.26	409131			65056						
Y	2	TRAFFIC SIGN	WELLOWGATE	GRIMSBY	526743.04	409067			65057			3 Watts			
Y	2A	TRAFFIC SIGN	WELLOWGATE	GRIMSBY	526743.04	409067			65058						
Y	3	TRAFFIC SIGN	WELLOWGATE	GRIMSBY	526876.73	408938			65059			7 Watts			
Y	4	TRAFFIC SIGN	WELLOWGATE	GRIMSBY	526879.09	408920			65060			3 Watts			
Y	1	TRAFFIC SIGN	VICTORIA STREET SOUTH	GRIMSBY	527160	409473			64908			6 Watts			
Y	10N	TRAFFIC SIGN	VICTORIA STREET SOUTH	GRIMSBY	527200.21	409569.11			64917						
Y	11N	TRAFFIC SIGN	VICTORIA STREET SOUTH	GRIMSBY	527190.03	409581			64918						
Y	12	TRAFFIC SIGN	VICTORIA STREET SOUTH	GRIMSBY	527165.31	409903.94			64919			3 Watts			
Y	13	TRAFFIC SIGN	VICTORIA STREET SOUTH	GRIMSBY	527153.73	409904.66			64920						
Y	14	TRAFFIC SIGN	VICTORIA STREET SOUTH	GRIMSBY	527167.12	409919.23			64921						
Y	2	TRAFFIC SIGN	VICTORIA STREET SOUTH	GRIMSBY	527155.22	409481.48			64909			4 Watts			
Y	3N	TRAFFIC SIGN	VICTORIA STREET SOUTH	GRIMSBY	527157.25	409484.92			64910						
Y	4N	TRAFFIC SIGN	VICTORIA STREET SOUTH	GRIMSBY					66561			4 Watts			
Y	5N	TRAFFIC SIGN	VICTORIA STREET SOUTH	GRIMSBY					66562			4 Watts			
Y	6	TRAFFIC SIGN	VICTORIA STREET SOUTH	GRIMSBY	527173.91	409525.79			64913			4 Watts			
Y	7	TRAFFIC SIGN	VICTORIA STREET SOUTH	GRIMSBY	527176.01	409533.37			64914			4 Watts			
Y	8N	TRAFFIC SIGN	VICTORIA STREET SOUTH	GRIMSBY	527181.29	409564.89			64915			4 Watts			
Y	9N	TRAFFIC SIGN	VICTORIA STREET SOUTH	GRIMSBY	527189	409566			64916			4 Watts			
Y	1	TRAFFIC SIGN	BETHLEHEM STREET	GRIMSBY	526680.94	409143			63775			4 Watts			
Y	1A	TRAFFIC SIGN	BETHLEHEM STREET	GRIMSBY	526680.94	409143			63776						
Y	2	TRAFFIC SIGN	BETHLEHEM STREET	GRIMSBY	526682.23	409158.54			66549			3 Watts			
Y	3	TRAFFIC SIGN	BETHLEHEM STREET	GRIMSBY	526690.91	409152.86			66550			3 Watts			
Y	4	TRAFFIC SIGN	BETHLEHEM STREET	GRIMSBY	526758.43	409207.45			66551			3 Watts			
Y	5	TRAFFIC SIGN	BETHLEHEM STREET	GRIMSBY	526766.31	409202.67			66552			3 Watts			
Y	10	TRAFFIC SIGN	OSBORNE STREET	GRIMSBY	527017.22	409327.13			66557			3 Watts			
Y	11	TRAFFIC SIGN	OSBORNE STREET	GRIMSBY	527022.34	409318.61			66558			3 Watts			
Y	8	TRAFFIC SIGN	OSBORNE STREET	GRIMSBY	526898.58	409283.45			66555			3 Watts			

Y	9	TRAFFIC SIGN	OSBORNE STREET	GRIMSBY	526902.47	409276.28			66556			3 Watts			
Y	6	TRAFFIC SIGN	SOUTH ST MARYS GATE	GRIMSBY	526818.71	409245.11			66553			3 Watts			
Y	7	TRAFFIC SIGN	SOUTH ST MARYS GATE	GRIMSBY	526827.76	409239.22			66554			3 Watts			
Y	1	TRAFFIC SIGN	CHURCH LANE	GRIMSBY	526585.31	409127			63891			3 Watts			
Y	2	TRAFFIC SIGN	CHURCH LANE	GRIMSBY	526587.96	409126			63892			3 Watts			
Y	3	TRAFFIC SIGN	CHURCH LANE	GRIMSBY	526642.99	409130			63893			6 Watts			
Y	4	TRAFFIC SIGN	CHURCH LANE	GRIMSBY	526649.23	409120			63894			4 Watts			
Y	1	TRAFFIC SIGN	TOWN HALL STREET	GRIMSBY	527100.74	409400			64891			7 Watts			
Y	2	TRAFFIC SIGN	TOWN HALL STREET	GRIMSBY	527113.73	409326.26			64892			3 Watts			
Y	2A	TRAFFIC SIGN	TOWN HALL STREET	GRIMSBY	527113.73	409326.26			64894						
Y	3	TRAFFIC SIGN	TOWN HALL STREET	GRIMSBY	527103.18	409328.39			64895			3 Watts			
Y	3A	TRAFFIC SIGN	TOWN HALL STREET	GRIMSBY	527103.18	409328.39			64897						
Y	4	TRAFFIC SIGN	TOWN HALL STREET	GRIMSBY	527103.18	409328.39			64898			6 Watts			
Y	5	TRAFFIC SIGN	TOWN HALL STREET	GRIMSBY	527113.73	409326.26			64899			3 Watts			
Y	1	TRAFFIC SIGN	FREDERICK WARD WAY	GRIMSBY	526578.97	409136			64184			3 Watts			
Y	10N	TRAFFIC SIGN	FREDERICK WARD WAY	GRIMSBY					70116						
Y	11	TRAFFIC SIGN	FREDERICK WARD WAY	GRIMSBY	526596.94	409361.65			64193			4 Watts			
Y	12	TRAFFIC SIGN	FREDERICK WARD WAY	GRIMSBY	526972.74	409520.63			64194			11 Watts			
Y	13	TRAFFIC SIGN	FREDERICK WARD WAY	GRIMSBY	526984.04	409522			64195			13 Watts			
Y	14	TRAFFIC SIGN	FREDERICK WARD WAY	GRIMSBY	527000.07	409524			64196			4 Watts			
Y	15	TRAFFIC SIGN	FREDERICK WARD WAY	GRIMSBY	527063.97	409533			64197			11 Watts			
Y	16	TRAFFIC SIGN	FREDERICK WARD WAY	GRIMSBY	527075.1	409538			64198			11 Watts			
Y	17	TRAFFIC SIGN	FREDERICK WARD WAY	GRIMSBY	527077.8	409539			64199			6 Watts			
Y	18	TRAFFIC SIGN	FREDERICK WARD WAY	GRIMSBY	527194.74	409554.84			64200			4 Watts			
Y	2	TRAFFIC SIGN	FREDERICK WARD WAY	GRIMSBY	526576.74	409138			64185			3 Watts			
Y	3	TRAFFIC SIGN	FREDERICK WARD WAY	GRIMSBY	526572.44	409134			64186			3 Watts			
Y	4	TRAFFIC SIGN	FREDERICK WARD WAY	GRIMSBY	526570.89	409139			64187			3 Watts			
Y	5	TRAFFIC SIGN	FREDERICK WARD WAY	GRIMSBY	526599.57	409307			64188			4 Watts			
Y	6	TRAFFIC SIGN	FREDERICK WARD WAY	GRIMSBY	526599.5	409326			64189			4 Watts			
Y	7	TRAFFIC SIGN	FREDERICK WARD WAY	GRIMSBY	526591.16	409327			64190			4 Watts			
Y	8	TRAFFIC SIGN	FREDERICK WARD WAY	GRIMSBY	526587.7	409330			64191			4 Watts			
Y	9	TRAFFIC SIGN	FREDERICK WARD WAY	GRIMSBY	526596.79	409338			64192			4 Watts			
Y	1	TRAFFIC SIGN	VICTORIA STREET WEST	GRIMSBY	527034.61	409406.12			66436			3 Watts			
Y	1A	TRAFFIC SIGN	VICTORIA STREET WEST	GRIMSBY	527034.61	409406.12			66437						
Y	2	TRAFFIC SIGN	VICTORIA STREET WEST	GRIMSBY	527080.86	409419.44			64923			3 Watts			
Y	3	TRAFFIC SIGN	VICTORIA STREET WEST	GRIMSBY	527082.71	409408.04			64924			3 Watts			
Y	4	TRAFFIC SIGN	VICTORIA STREET WEST	GRIMSBY	527080.86	409419.44			64925			3 Watts			
Y	5	TRAFFIC SIGN	VICTORIA STREET WEST	GRIMSBY	527085.65	409408.97			64926			3 Watts			
Y	6	TRAFFIC SIGN	VICTORIA STREET WEST	GRIMSBY	527101.08	409415.21			66435			3 Watts			
Y	6A	TRAFFIC SIGN	VICTORIA STREET WEST	GRIMSBY	527101.08	409415.21			66438						
Y	7	TRAFFIC SIGN	VICTORIA STREET WEST	GRIMSBY	527120.41	409438.15			64927			3 Watts			
Y	10N	TRAFFIC SIGN	ABBEY ROAD	GRIMSBY	526473.95	408658			63652						
Y	11	TRAFFIC SIGN	ABBEY ROAD	GRIMSBY	526478.63	408653			63653			4 Watts			
Y	1N	TRAFFIC SIGN	ABBEY ROAD	GRIMSBY	526977.57	408979			63646						
Y	2	TRAFFIC SIGN	ABBEY ROAD	GRIMSBY	526975.85	408986			63647			3 Watts			
Y	3N	TRAFFIC SIGN	ABBEY ROAD	GRIMSBY	526973.79	408978			63648						
Y	4	TRAFFIC SIGN	ABBEY ROAD	GRIMSBY	526865.65	408926			65298			3 Watts			
Y	5	TRAFFIC SIGN	ABBEY ROAD	GRIMSBY	526865.65	408926			65299			70 Watts			
Y	6	TRAFFIC SIGN	ABBEY ROAD	GRIMSBY					68287						
Y	7	TRAFFIC SIGN	ABBEY ROAD	GRIMSBY					68429						
Y	8	TRAFFIC SIGN	ABBEY ROAD	GRIMSBY	526503.47	408669			63650			4 Watts			
Y	9N	TRAFFIC SIGN	ABBEY ROAD	GRIMSBY	526478.84	408661			63651						
Y	1	TRAFFIC SIGN	MARKET HALL CARPARK ENTRANCE	GRIMSBY	526635.64	409346.7			64497			13 Watts			
Y	2	TRAFFIC SIGN	MARKET HALL CARPARK ENTRANCE	GRIMSBY	526637.55	409340.21			64498			4 Watts			
Y	3	TRAFFIC SIGN	MARKET HALL CARPARK ENTRANCE	GRIMSBY	526636.85	409346.01			69084			4 Watts			
Y	4N	TRAFFIC SIGN	MARKET HALL CARPARK ENTRANCE	GRIMSBY	526646.07	409349.18			69085						
Y	5N	TRAFFIC SIGN	MARKET HALL CARPARK ENTRANCE	GRIMSBY	526673.53	409363.43			69086						
Y	1	TRAFFIC SIGN	BOWLING GREEN LANE	GRIMSBY	527310.26	409395.19			63788			3 Watts			
Y	1A	TRAFFIC SIGN	BOWLING GREEN LANE	GRIMSBY	527310.26	409395.19			63789			3 Watts			
Y	2	TRAFFIC SIGN	BOWLING GREEN LANE	GRIMSBY	527306	409376			63790			4 Watts			
Y	2A	TRAFFIC SIGN	BOWLING GREEN LANE	GRIMSBY	527306	409376			63791						
Y	3	TRAFFIC SIGN	BOWLING GREEN LANE	GRIMSBY	527347.69	409338.63			63792			7 Watts			
Y	1	TRAFFIC SIGN	BULLER STREET	GRIMSBY	528101.77	409340			63822			7 Watts			
Y	1	TRAFFIC SIGN	CATHERINE STREET	GRIMSBY	527462.24	409016			63872			11 Watts			
Y	1	TRAFFIC SIGN	CHURCHILL WAY	GRIMSBY	527782.98	409346			63899			4 Watts			
Y	1	TRAFFIC SIGN	COOPER ROAD	GRIMSBY	528048.69	409034			63969			3 Watts			
Y	1A	TRAFFIC SIGN	COOPER ROAD	GRIMSBY	528050.94	409028			63979						
Y	2	TRAFFIC SIGN	COOPER ROAD	GRIMSBY	528050.94	409028			63970			3 Watts			
Y	2A	TRAFFIC SIGN	COOPER ROAD	GRIMSBY	528048.69	409034			63973						
Y	3	TRAFFIC SIGN	COOPER ROAD	GRIMSBY	528050.94	409028			63971			3 Watts			
Y	4	TRAFFIC SIGN	COOPER ROAD	GRIMSBY	528048.69	409034			63972			3 Watts			
Y	5	TRAFFIC SIGN	COOPER ROAD	GRIMSBY	528321.39	409171			63974			3 Watts			
Y	6	TRAFFIC SIGN	COOPER ROAD	GRIMSBY	528323.99	409166			63975			3 Watts			
Y	7	TRAFFIC SIGN	COOPER ROAD	GRIMSBY	528323.99	409166			63976			3 Watts			
Y	7A	TRAFFIC SIGN	COOPER ROAD	GRIMSBY	528323.99	409166			63981						
Y	8	TRAFFIC SIGN	COOPER ROAD	GRIMSBY	528321.39	409171			63977			3 Watts			
Y	8A	TRAFFIC SIGN	COOPER ROAD	GRIMSBY	528321.39	409171			63980						
Y	9	TRAFFIC SIGN	COOPER ROAD	GRIMSBY	528340.66	409172			63978			4 Watts			
Y	1	TRAFFIC SIGN	EDWARD STREET	GRIMSBY	527711.13	409218			64101			6 Watts			
Y	1	TRAFFIC SIGN	JULIAN STREET	GRIMSBY	528142.2	409257.1			64361			7 Watts			
Y	1	TRAFFIC SIGN	ROPERY STREET	GRIMSBY	527909.45	409035			64735			3 Watts			
Y	1	TRAFFIC SIGN	SHEEPFOLD STREET	GRIMSBY	527373.4	409383			64783			4 Watts			
Y	2	TRAFFIC SIGN	SHEEPFOLD STREET	GRIMSBY	527372.24	409325.3			64784			7 Watts			
Y	3	TRAFFIC SIGN	SHEEPFOLD STREET	GRIMSBY	527368.46	409325.83			64785			11 Watts			
Y	4	TRAFFIC SIGN	SHEEPFOLD STREET	GRIMSBY	527368.38	409325.71			64786			6 Watts			
Y	5	TRAFFIC SIGN	SHEEPFOLD STREET	GRIMSBY	527359.07	409326.5			64787			6 Watts			
Y	6	TRAFFIC SIGN	SHEEPFOLD STREET	GRIMSBY	527368.38	409325.71			64788			11 Watts			
Y	7	TRAFFIC SIGN	SHEEPFOLD STREET	GRIMSBY	527359.07	409326.5			64789			11 Watts			
Y	8	TRAFFIC SIGN	SHEEPFOLD STREET	GRIMSBY	527367.95	409322.43			64790			11 Watts			
Y	1	TRAFFIC SIGN	SIXHILLS STREET	GRIMSBY	527367.81	409260.56			64792			11 Watts			
Y	10	TRAFFIC SIGN	SIXHILLS STREET	GRIMSBY	527647.47	409216			64800			3 Watts			
Y	11	TRAFFIC SIGN	SIXHILLS STREET	GRIMSBY					68410			3 Watts			
Y	11A	TRAFFIC SIGN	SIXHILLS STREET	GRIMSBY					68411						
Y	12	TRAFFIC SIGN	SIXHILLS STREET	GRIMSBY					68412			4,700 Watts			
Y	13	TRAFFIC SIGN	SIXHILLS STREET	GRIMSBY	527806.57	409203			64801			3 Watts			
Y	14	TRAFFIC SIGN	SIXHILLS STREET	GRIMSBY	527806.93	409194			64802			4 Watts			
Y	15	TRAFFIC SIGN	SIXHILLS STREET	GRIMSBY	527835.34	409198			64803			4 Watts			
Y	16	TRAFFIC SIGN	SIXHILLS STREET	GRIMSBY	527832.98	409190			64804			4 Watts			
Y	17	TRAFFIC SIGN	SIXHILLS STREET	GRIMSBY	527844.56	409189			64805			4 Watts			
Y	18	TRAFFIC SIGN	SIXHILLS STREET	GRIMSBY	527845.51	409197			64806			4 Watts			
Y	19	TRAFFIC SIGN	SIXHILLS STREET	GRIMSBY	527887	409183			64807			11 Watts			
Y	20	TRAFFIC SIGN	SIXHILLS STREET	GRIMSBY					68413			3 Watts			
Y	20A	TRAFFIC SIGN	SIXHILLS STREET	GRIMSBY					68414						
Y	21	TRAFFIC SIGN	SIXHILLS STREET	GRIMSBY					68415			4,700 Watts			
Y	22	TRAFFIC SIGN	SIXHILLS STREET	GRIMSBY	527965.13	409185			64808			11 Watts			
Y	2N	TRAFFIC SIGN	SIXHILLS STREET	GRIMSBY					67327						
Y	3	TRAFFIC SIGN	SIXHILLS STREET	GRIMSBY	527474.71	409242.04			64793			3 Watts			
Y	4	TRAFFIC SIGN	SIXHILLS STREET	GRIMSBY	527475.92	409248.22			64794			6 Watts			
Y	5	TRAFFIC SIGN	SIXHILLS STREET	GRIMSBY	527545.03	409239			64796			4 Watts			
Y	6	TRAFFIC SIGN	SIXHILLS STREET	GRIMSBY	527544	409231			64795			6 Watts			

Y	7	TRAFFIC SIGN	SIXHILLS STREET	GRIMSBY	527558.58	409228			64797			3 Watts			
Y	8	TRAFFIC SIGN	SIXHILLS STREET	GRIMSBY	527626.08	409228			64798			4 Watts			
Y	9	TRAFFIC SIGN	SIXHILLS STREET	GRIMSBY	527624.42	409219			64799			3 Watts			
Y	1	TRAFFIC SIGN	THOMAS STREET	GRIMSBY	527800.12	409318			64877			3 Watts			
Y	1	TRAFFIC SIGN	WEELSBY STREET SOUTH	GRIMSBY	528082.77	409452			65015			4 Watts			
Y	2	TRAFFIC SIGN	WEELSBY STREET SOUTH	GRIMSBY	528172.52	409183			65016			4 Watts			
Y	3	TRAFFIC SIGN	WEELSBY STREET SOUTH	GRIMSBY	528179.61	409169			65017			11 Watts			
Y	3A	TRAFFIC SIGN	WEELSBY STREET SOUTH	GRIMSBY	528179.61	409169			65018						
Y	4	TRAFFIC SIGN	WEELSBY STREET SOUTH	GRIMSBY	528173.82	409167			65019			11 Watts			
Y	4A	TRAFFIC SIGN	WEELSBY STREET SOUTH	GRIMSBY	528173.82	409167			65020						
Y	5	TRAFFIC SIGN	WEELSBY STREET SOUTH	GRIMSBY	528173.82	409167			65021			11 Watts			
Y	6	TRAFFIC SIGN	WEELSBY STREET SOUTH	GRIMSBY	528179.61	409169			65022			11 Watts			
Y	1	TRAFFIC SIGN	WILLINGHAM STREET	GRIMSBY	527517.69	409499.27			65147			3 Watts			
Y	10	TRAFFIC SIGN	WILLINGHAM STREET	GRIMSBY	527501.36	409369.44			65156			11 Watts			
Y	11	TRAFFIC SIGN	WILLINGHAM STREET	GRIMSBY	527487.35	409332			65157			11 Watts			
Y	12	TRAFFIC SIGN	WILLINGHAM STREET	GRIMSBY	527476.5	409249.95			65158			4 Watts			
Y	13	TRAFFIC SIGN	WILLINGHAM STREET	GRIMSBY	527485.76	409249			65159			4 Watts			
Y	14	TRAFFIC SIGN	WILLINGHAM STREET	GRIMSBY	527483.87	409237			65160			7 Watts			
Y	15	TRAFFIC SIGN	WILLINGHAM STREET	GRIMSBY	527456.09	409027			65161			11 Watts			
Y	16	TRAFFIC SIGN	WILLINGHAM STREET	GRIMSBY	527449	409027			65162			3 Watts			
Y	17	TRAFFIC SIGN	WILLINGHAM STREET	GRIMSBY	527453.69	409016			65163			7 Watts			
Y	18	TRAFFIC SIGN	WILLINGHAM STREET	GRIMSBY	527446.04	409017			65164			7 Watts			
Y	19	TRAFFIC SIGN	WILLINGHAM STREET	GRIMSBY	527427	408808			65165			7 Watts			
Y	2	TRAFFIC SIGN	WILLINGHAM STREET	GRIMSBY	527509.07	409500.75			65148			3 Watts			
Y	20	TRAFFIC SIGN	WILLINGHAM STREET	GRIMSBY	527417.91	408804.41			65166			4 Watts			
Y	21	TRAFFIC SIGN	WILLINGHAM STREET	GRIMSBY	527426.44	408803.37			65167			11 Watts			
Y	21A	TRAFFIC SIGN	WILLINGHAM STREET	GRIMSBY	527426.44	408803.37			65168			4 Watts			
Y	22	TRAFFIC SIGN	WILLINGHAM STREET	GRIMSBY	527417.91	408804.41			65169			6 Watts			
Y	23	TRAFFIC SIGN	WILLINGHAM STREET	GRIMSBY	527426.44	408803.37			65170			11 Watts			
Y	24	TRAFFIC SIGN	WILLINGHAM STREET	GRIMSBY	527414.54	408790.02			65171			4 Watts			
Y	25	TRAFFIC SIGN	WILLINGHAM STREET	GRIMSBY	527425.82	408789.57			65172			4 Watts			
Y	26	TRAFFIC SIGN	WILLINGHAM STREET	GRIMSBY	527416.5	408791			65173			4 Watts			
Y	27	TRAFFIC SIGN	WILLINGHAM STREET	GRIMSBY	527442.22	408654			65174			3 Watts			
Y	28	TRAFFIC SIGN	WILLINGHAM STREET	GRIMSBY	527433.71	408651			65175			4 Watts			
Y	3	TRAFFIC SIGN	WILLINGHAM STREET	GRIMSBY	527503.96	409391			65149			3 Watts			
Y	4	TRAFFIC SIGN	WILLINGHAM STREET	GRIMSBY	527502.77	409383			65150			4 Watts			
Y	5	TRAFFIC SIGN	WILLINGHAM STREET	GRIMSBY	527495.45	409385			65151			3 Watts			
Y	6	TRAFFIC SIGN	WILLINGHAM STREET	GRIMSBY	527502.77	409383			65152			4 Watts			
Y	7	TRAFFIC SIGN	WILLINGHAM STREET	GRIMSBY	527501.36	409369.44			65153			4 Watts			
Y	8	TRAFFIC SIGN	WILLINGHAM STREET	GRIMSBY	527492.49	409369			65154			4 Watts			
Y	9	TRAFFIC SIGN	WILLINGHAM STREET	GRIMSBY	527492.49	409369			65155			11 Watts			
Y	1	TRAFFIC SIGN	HENEAGE ROAD	GRIMSBY	527824.66	409710			64314			6 Watts			
Y	10N	TRAFFIC SIGN	HENEAGE ROAD	GRIMSBY					69895						
Y	11	TRAFFIC SIGN	HENEAGE ROAD	GRIMSBY	527740.69	409527			64325			11 Watts			
Y	12	TRAFFIC SIGN	HENEAGE ROAD	GRIMSBY	527730.03	409512			64326			4 Watts			
Y	13	TRAFFIC SIGN	HENEAGE ROAD	GRIMSBY	527726.79	409506			64327			4 Watts			
Y	14	TRAFFIC SIGN	HENEAGE ROAD	GRIMSBY	527658.81	409372			64328			4 Watts			
Y	15	TRAFFIC SIGN	HENEAGE ROAD	GRIMSBY	527655.89	409363			64329			11 Watts			
Y	16	TRAFFIC SIGN	HENEAGE ROAD	GRIMSBY	527646.95	409364			64330			11 Watts			
Y	17	TRAFFIC SIGN	HENEAGE ROAD	GRIMSBY	527644.37	409345			64331			3 Watts			
Y	18	TRAFFIC SIGN	HENEAGE ROAD	GRIMSBY	527653.48	409344			64332			4 Watts			
Y	19	TRAFFIC SIGN	HENEAGE ROAD	GRIMSBY	527641.96	409337			64333			11 Watts			
Y	2	TRAFFIC SIGN	HENEAGE ROAD	GRIMSBY	527782.71	409571			64315			4 Watts			
Y	20	TRAFFIC SIGN	HENEAGE ROAD	GRIMSBY	527650.15	408916			64334			6 Watts			
Y	20A	TRAFFIC SIGN	HENEAGE ROAD	GRIMSBY	527650.15	408916			64344						
Y	21	TRAFFIC SIGN	HENEAGE ROAD	GRIMSBY	527704.65	408723			64335			4 Watts			
Y	22	TRAFFIC SIGN	HENEAGE ROAD	GRIMSBY	527694.16	408720			64336			11 Watts			
Y	23	TRAFFIC SIGN	HENEAGE ROAD	GRIMSBY	527696.57	408711			64337			4 Watts			
Y	24	TRAFFIC SIGN	HENEAGE ROAD	GRIMSBY	527707.06	408713			64338			4 Watts			
Y	25	TRAFFIC SIGN	HENEAGE ROAD	GRIMSBY	527715.51	408647			64339			4 Watts			
Y	25A	TRAFFIC SIGN	HENEAGE ROAD	GRIMSBY	527715.51	408647			64343						
Y	26N	TRAFFIC SIGN	HENEAGE ROAD	GRIMSBY	527881.59	408075.07			68115						
Y	27N	TRAFFIC SIGN	HENEAGE ROAD	GRIMSBY	527878.02	408074.77			68116						
Y	28N	TRAFFIC SIGN	HENEAGE ROAD	GRIMSBY	527879.23	408070.59			68117						
Y	2A	TRAFFIC SIGN	HENEAGE ROAD	GRIMSBY	527782.71	409571			64345			3 Watts			
Y	3	TRAFFIC SIGN	HENEAGE ROAD	GRIMSBY	527770.33	409555			64316			4 Watts			
Y	4	TRAFFIC SIGN	HENEAGE ROAD	GRIMSBY	527757.26	409554			64317			11 Watts			
Y	4A	TRAFFIC SIGN	HENEAGE ROAD	GRIMSBY	527757.26	409554			64318						
Y	5	TRAFFIC SIGN	HENEAGE ROAD	GRIMSBY	527761.26	409550			64319			3 Watts			
Y	6	TRAFFIC SIGN	HENEAGE ROAD	GRIMSBY	527760.62	409549			64320			7 Watts			
Y	7N	TRAFFIC SIGN	HENEAGE ROAD	GRIMSBY	527759.7	409547			64321						
Y	8N	TRAFFIC SIGN	HENEAGE ROAD	GRIMSBY					69048						
Y	9	TRAFFIC SIGN	HENEAGE ROAD	GRIMSBY	527749.27	409531			64323			11 Watts			
Y	1	TRAFFIC SIGN	CONVAMORE ROAD	GRIMSBY	527860.91	409347			63951			11 Watts			
Y	10	TRAFFIC SIGN	CONVAMORE ROAD	GRIMSBY	527836.78	409200			63958			4 Watts			
Y	11	TRAFFIC SIGN	CONVAMORE ROAD	GRIMSBY	527844.93	409198			63959			3 Watts			
Y	12	TRAFFIC SIGN	CONVAMORE ROAD	GRIMSBY	527834.89	409188			63960			4 Watts			
Y	13	TRAFFIC SIGN	CONVAMORE ROAD	GRIMSBY	527872.81	409035.71			63961			6 Watts			
Y	13A	TRAFFIC SIGN	CONVAMORE ROAD	GRIMSBY	527872.81	409035.71			63962						
Y	14	TRAFFIC SIGN	CONVAMORE ROAD	GRIMSBY	527872.81	409035.71			63963			4 Watts			
Y	15	TRAFFIC SIGN	CONVAMORE ROAD	GRIMSBY	527868.55	409031.59			63964			4 Watts			
Y	16	TRAFFIC SIGN	CONVAMORE ROAD	GRIMSBY	527968.46	408698			63965			11 Watts			
Y	17	TRAFFIC SIGN	CONVAMORE ROAD	GRIMSBY	527958.29	408696			63966			4 Watts			
Y	18	TRAFFIC SIGN	CONVAMORE ROAD	GRIMSBY	527972.36	408685			63967			7 Watts			
Y	19	TRAFFIC SIGN	CONVAMORE ROAD	GRIMSBY	527962.07	408682			63968			4 Watts			
Y	2	TRAFFIC SIGN	CONVAMORE ROAD	GRIMSBY	527868.24	409340			63952			11 Watts			
Y	3	TRAFFIC SIGN	CONVAMORE ROAD	GRIMSBY	527867.01	409340			63953			11 Watts			
Y	4	TRAFFIC SIGN	CONVAMORE ROAD	GRIMSBY	527865.78	409334			63954			3 Watts			
Y	5	TRAFFIC SIGN	CONVAMORE ROAD	GRIMSBY	527859.59	409335			63955			11 Watts			
Y	6	TRAFFIC SIGN	CONVAMORE ROAD	GRIMSBY	527857.93	409313			63956			3 Watts			
Y	7	TRAFFIC SIGN	CONVAMORE ROAD	GRIMSBY	527846.94	409315			63957			4 Watts			
Y	8	TRAFFIC SIGN	CONVAMORE ROAD	GRIMSBY					67368			3 Watts			
Y	8A	TRAFFIC SIGN	CONVAMORE ROAD	GRIMSBY					67369						
Y	9	TRAFFIC SIGN	CONVAMORE ROAD	GRIMSBY					67370			4,700 Watts			
Y	1	TRAFFIC SIGN	ELEANOR STREET	GRIMSBY	527735.94	409547			64102			3 Watts			
Y	10	TRAFFIC SIGN	ELEANOR STREET	GRIMSBY	528078.37	409466			64112			4 Watts			
Y	10A	TRAFFIC SIGN	ELEANOR STREET	GRIMSBY	528078.37	409466			64119						
Y	11	TRAFFIC SIGN	ELEANOR STREET	GRIMSBY	528096.46	409451			64113			4 Watts			
Y	11A	TRAFFIC SIGN	ELEANOR STREET	GRIMSBY	528096.46	409451			64120						
Y	12	TRAFFIC SIGN	ELEANOR STREET	GRIMSBY	528105.08	409459			64114			4 Watts			
Y	13	TRAFFIC SIGN	ELEANOR STREET	GRIMSBY	528212.41	409422			64115			6 Watts			
Y	1A	TRAFFIC SIGN	ELEANOR STREET	GRIMSBY	527735.94	409547			64116						
Y	2	TRAFFIC SIGN	ELEANOR STREET	GRIMSBY	527739.25	409546.43			64103			4 Watts			
Y	3	TRAFFIC SIGN	ELEANOR STREET	GRIMSBY	527737.27	409535.83			64104			6 Watts			
Y	4	TRAFFIC SIGN	ELEANOR STREET	GRIMSBY	527763.63	409532.52			64105			4 Watts			
Y	5	TRAFFIC SIGN	ELEANOR STREET	GRIMSBY	527775.53	409542.59			64106			4 Watts			
Y	6	TRAFFIC SIGN	ELEANOR STREET	GRIMSBY	527907.22	409523.58			64107			4 Watts			
Y	7	TRAFFIC SIGN	ELEANOR STREET	GRIMSBY	527905.08	409514.13			64108			4 Watts			
Y	7A	TRAFFIC SIGN	ELEANOR STREET	GRIMSBY	527905.08	409514.13			64109						
Y	8	TRAFFIC SIGN	ELEANOR STREET	GRIMSBY	527991.73	409497			64110			4 Watts			

Y	8A	TRAFFIC SIGN	ELEANOR STREET	GRIMSBY	527991.73	409497			64117						
Y	9	TRAFFIC SIGN	ELEANOR STREET	GRIMSBY	528008.51	409482			64111			6 Watts			
Y	9A	TRAFFIC SIGN	ELEANOR STREET	GRIMSBY	528008.51	409482			64118						
Y	1	TRAFFIC SIGN	PASTURE STREET	GRIMSBY	527892.84	409305			64607			6 Watts			
Y	10	TRAFFIC SIGN	PASTURE STREET	GRIMSBY	527729.67	409334			64616			3 Watts			
Y	11	TRAFFIC SIGN	PASTURE STREET	GRIMSBY	527732.25	409343			64617			6 Watts			
Y	12	TRAFFIC SIGN	PASTURE STREET	GRIMSBY	527732.25	409343			64618			11 Watts			
Y	13	TRAFFIC SIGN	PASTURE STREET	GRIMSBY	527658.5	409345			64619			7 Watts			
Y	14	TRAFFIC SIGN	PASTURE STREET	GRIMSBY	527659.81	409354			64620			3 Watts			
Y	15	TRAFFIC SIGN	PASTURE STREET	GRIMSBY	527642.44	409347			64621			11 Watts			
Y	16	TRAFFIC SIGN	PASTURE STREET	GRIMSBY	527641.41	409357			64622			6 Watts			
Y	17	TRAFFIC SIGN	PASTURE STREET	GRIMSBY	527580.2	409366			64623			11 Watts			
Y	18	TRAFFIC SIGN	PASTURE STREET	GRIMSBY	527579.69	409357			64624			11 Watts			
Y	19	TRAFFIC SIGN	PASTURE STREET	GRIMSBY	527559.16	409370.31			64625			4 Watts			
Y	20	TRAFFIC SIGN	PASTURE STREET	GRIMSBY	527557.49	409361.34			64626			3 Watts			
Y	21	TRAFFIC SIGN	PASTURE STREET	GRIMSBY	527559.11	409370.03			64627			4 Watts			
Y	22	TRAFFIC SIGN	PASTURE STREET	GRIMSBY	527557.49	409361.34			64628			3 Watts			
Y	23	TRAFFIC SIGN	PASTURE STREET	GRIMSBY	527505.73	409378.16			64629			7 Watts			
Y	24	TRAFFIC SIGN	PASTURE STREET	GRIMSBY	527504.21	409370			64630			7 Watts			
Y	25	TRAFFIC SIGN	PASTURE STREET	GRIMSBY	527489.63	409381.55			64631			4 Watts			
Y	26	TRAFFIC SIGN	PASTURE STREET	GRIMSBY	527489.28	409372.38			64632			4 Watts			
Y	27	TRAFFIC SIGN	PASTURE STREET	GRIMSBY	527432	409390			64633			4 Watts			
Y	28	TRAFFIC SIGN	PASTURE STREET	GRIMSBY	527385.75	409397.57			64634			6 Watts			
Y	29	TRAFFIC SIGN	PASTURE STREET	GRIMSBY	527384.81	409388.94			64635			6 Watts			
Y	2N	TRAFFIC SIGN	PASTURE STREET	GRIMSBY	527878.35	409322			64608						
Y	3	TRAFFIC SIGN	PASTURE STREET	GRIMSBY	527878.25	409323.07			64609			6 Watts			
Y	30	TRAFFIC SIGN	PASTURE STREET	GRIMSBY	527380	409398.44			64636			4 Watts			
Y	31	TRAFFIC SIGN	PASTURE STREET	GRIMSBY	527375.63	409399.01			64637			4 Watts			
Y	32	TRAFFIC SIGN	PASTURE STREET	GRIMSBY	527373.81	409390.57			64638			4 Watts			
Y	33	TRAFFIC SIGN	PASTURE STREET	GRIMSBY	527333.81	409405.69			64639			4 Watts			
Y	34	TRAFFIC SIGN	PASTURE STREET	GRIMSBY	527332.95	409396			64640			6 Watts			
Y	35	TRAFFIC SIGN	PASTURE STREET	GRIMSBY	527310.56	409417.24			64641			4 Watts			
Y	36	TRAFFIC SIGN	PASTURE STREET	GRIMSBY	527307.19	409409.5			64642			4 Watts			
Y	37	TRAFFIC SIGN	PASTURE STREET	GRIMSBY	527305.63	409410.45			64643			4 Watts			
Y	38	TRAFFIC SIGN	PASTURE STREET	GRIMSBY	527301.47	409419.76			64644			4 Watts			
Y	39	TRAFFIC SIGN	PASTURE STREET	GRIMSBY	527248.38	409427.47			64645			3 Watts			
Y	4	TRAFFIC SIGN	PASTURE STREET	GRIMSBY	527883.91	409327.85			64610			4 Watts			
Y	40	TRAFFIC SIGN	PASTURE STREET	GRIMSBY	527220.99	409425.77			64646			3 Watts			
Y	41	TRAFFIC SIGN	PASTURE STREET	GRIMSBY	527176.48	409419.91			64647			3 Watts			
Y	42	TRAFFIC SIGN	PASTURE STREET	GRIMSBY	527153.91	409439.07			64648			4 Watts			
Y	43	TRAFFIC SIGN	PASTURE STREET	GRIMSBY	527133.51	409439.7			64649			3 Watts			
Y	44	TRAFFIC SIGN	PASTURE STREET	GRIMSBY	527133.81	409431.81			64650			3 Watts			
Y	45	TRAFFIC SIGN	PASTURE STREET	GRIMSBY	527133.81	409431.81			64651			3 Watts			
Y	5	TRAFFIC SIGN	PASTURE STREET	GRIMSBY	527836.61	409318			64611			7 Watts			
Y	6	TRAFFIC SIGN	PASTURE STREET	GRIMSBY	527837.13	409326			64612			7 Watts			
Y	7	TRAFFIC SIGN	PASTURE STREET	GRIMSBY	527805.49	409331			64613			11 Watts			
Y	8	TRAFFIC SIGN	PASTURE STREET	GRIMSBY	527805.49	409331			64614			4 Watts			
Y	9	TRAFFIC SIGN	PASTURE STREET	GRIMSBY	527775.4	409327			64615			3 Watts			
Y	1	TRAFFIC SIGN	HAINTON AVENUE	GRIMSBY	527592.54	409541			64297			3 Watts			
Y	10	TRAFFIC SIGN	HAINTON AVENUE	GRIMSBY	527519.78	409023			65340			3 Watts			
Y	11	TRAFFIC SIGN	HAINTON AVENUE	GRIMSBY	527519.78	409023			65341			70 Watts			
Y	12	TRAFFIC SIGN	HAINTON AVENUE	GRIMSBY	527509.03	408855.96			64303			3 Watts			
Y	13	TRAFFIC SIGN	HAINTON AVENUE	GRIMSBY	527486.75	408771.26			64304			3 Watts			
Y	14	TRAFFIC SIGN	HAINTON AVENUE	GRIMSBY	527548.69	408508			64305			3 Watts			
Y	15	TRAFFIC SIGN	HAINTON AVENUE	GRIMSBY	527548.69	408508			67096			1,806 Watts			
Y	16	TRAFFIC SIGN	HAINTON AVENUE	GRIMSBY	527654	408150			64306			11 Watts			
Y	17	TRAFFIC SIGN	HAINTON AVENUE	GRIMSBY	527655	408147			64307			11 Watts			
Y	18	TRAFFIC SIGN	HAINTON AVENUE	GRIMSBY	527656	408145			64308			11 Watts			
Y	2	TRAFFIC SIGN	HAINTON AVENUE	GRIMSBY	527591.21	409532			64298			3 Watts			
Y	3	TRAFFIC SIGN	HAINTON AVENUE	GRIMSBY	527564.73	409281			64299			7 Watts			
Y	4	TRAFFIC SIGN	HAINTON AVENUE	GRIMSBY	527563.12	409270.31			64300			7 Watts			
Y	4A	TRAFFIC SIGN	HAINTON AVENUE	GRIMSBY	527563.12	409270.31			67097						
Y	5	TRAFFIC SIGN	HAINTON AVENUE	GRIMSBY	527563.12	409270.31			69300			1,806 Watts			
Y	6	TRAFFIC SIGN	HAINTON AVENUE	GRIMSBY	527538.82	409169			64302			3 Watts			
Y	7	TRAFFIC SIGN	HAINTON AVENUE	GRIMSBY	527538.82	409169			65337			1,806 Watts			
Y	8	TRAFFIC SIGN	HAINTON AVENUE	GRIMSBY	527531.13	409024			65338			3 Watts			
Y	9	TRAFFIC SIGN	HAINTON AVENUE	GRIMSBY	527531.13	409024			65339			70 Watts			
Y	1	TRAFFIC SIGN	HUMBERSTONE ROAD	GRIMSBY	528207.42	409405			64352			4 Watts			
Y	2	TRAFFIC SIGN	HUMBERSTONE ROAD	GRIMSBY	528226.57	409359			64353			4 Watts			
Y	3	TRAFFIC SIGN	HUMBERSTONE ROAD	GRIMSBY					69061			4 Watts			
Y	3A	TRAFFIC SIGN	HUMBERSTONE ROAD	GRIMSBY					69062						
Y	3B	TRAFFIC SIGN	HUMBERSTONE ROAD	GRIMSBY	528253.52	409333			64354						
Y	3C	TRAFFIC SIGN	HUMBERSTONE ROAD	GRIMSBY	528253.52	409333			64359						
Y	4	TRAFFIC SIGN	HUMBERSTONE ROAD	GRIMSBY	528255.29	409307			64355			4 Watts			
Y	4A	TRAFFIC SIGN	HUMBERSTONE ROAD	GRIMSBY	528255.29	409307			64360						
Y	5	TRAFFIC SIGN	HUMBERSTONE ROAD	GRIMSBY	528296.9	409246			64356			4 Watts			
Y	6	TRAFFIC SIGN	HUMBERSTONE ROAD	GRIMSBY	528288.54	409242.21			64357			4 Watts			
Y	7	TRAFFIC SIGN	HUMBERSTONE ROAD	GRIMSBY	528295.84	409226.01			69046			7 Watts			
Y	8	TRAFFIC SIGN	HUMBERSTONE ROAD	GRIMSBY	528417	409009			64358			4 Watts			
Y	1	TRAFFIC SIGN	CARR LANE	GRIMSBY	528692.55	409422			63854			3 Watts			
Y	2	TRAFFIC SIGN	CARR LANE	GRIMSBY	528699.05	409419			65311			3 Watts			
Y	3	TRAFFIC SIGN	CARR LANE	GRIMSBY	528692.55	409413			65312			3 Watts			
Y	5	TRAFFIC SIGN	CARR LANE	GRIMSBY	529030.89	408741.73			65313			3 Watts			
Y	6	TRAFFIC SIGN	CARR LANE	GRIMSBY	529030.89	408741.73			65314			70 Watts			
Y	7	TRAFFIC SIGN	CARR LANE	GRIMSBY	529024.3	408734.57			65315			3 Watts			
Y	8	TRAFFIC SIGN	CARR LANE	GRIMSBY	529024.3	408734.57			65310			70 Watts			
Y	9	TRAFFIC SIGN	CARR LANE	GRIMSBY	529143	408477			63855			3 Watts			
Y	1	TRAFFIC SIGN	CLEE CRESCENT	GRIMSBY	529332.71	408415.81			63902			6 Watts			
Y	2N	TRAFFIC SIGN	CLEE CRESCENT	GRIMSBY	529325.46	408411.64			63903			4 Watts			
Y	3	TRAFFIC SIGN	CLEE CRESCENT	GRIMSBY	529322.86	408414.68			63904			4 Watts			
Y	4	TRAFFIC SIGN	CLEE CRESCENT	GRIMSBY	529181.89	408320			63905			7 Watts			
Y	1	TRAFFIC SIGN	HAMONT ROAD	GRIMSBY	528956.83	409057			64310			7 Watts			
Y	1	TRAFFIC SIGN	HELENE GROVE	GRIMSBY	528971.38	409051			64312			7 Watts			
Y	2	TRAFFIC SIGN	HELENE GROVE	GRIMSBY	528979.06	409055			64313			7 Watts			
Y	1	TRAFFIC SIGN	KATHLEEN GROVE	GRIMSBY	529043.12	409083			64362			7 Watts			
Y	2	TRAFFIC SIGN	KATHLEEN GROVE	GRIMSBY	529037	409080			64363			7 Watts			
Y	1	TRAFFIC SIGN	RUNSWICK ROAD	GRIMSBY	528857.87	409062.55			64742			4 Watts			
Y	2N	TRAFFIC SIGN	RUNSWICK ROAD	GRIMSBY					69049						
Y	3	TRAFFIC SIGN	RUNSWICK ROAD	GRIMSBY	528864.05	409056.67			64744			49 Watts			
Y	4	TRAFFIC SIGN	RUNSWICK ROAD	GRIMSBY	528862.03	409056.24			64745			3 Watts			
Y	1	TRAFFIC SIGN	VAUGHAN AVENUE	GRIMSBY	529010.5	407965			64900			4 Watts			
Y	1	TRAFFIC SIGN	COLUMBIA ROAD	GRIMSBY	528103.61	408907			63938			3 Watts			
Y	1A	TRAFFIC SIGN	COLUMBIA ROAD	GRIMSBY	528106.09	408900			63941						
Y	2	TRAFFIC SIGN	COLUMBIA ROAD	GRIMSBY	528106.09	408900			63939			4 Watts			
Y	2A	TRAFFIC SIGN	COLUMBIA ROAD	GRIMSBY	528103.61	408907			63943						
Y	3	TRAFFIC SIGN	COLUMBIA ROAD	GRIMSBY	528106.09	408900			63940			3 Watts			
Y	4	TRAFFIC SIGN	COLUMBIA ROAD	GRIMSBY	528103.61	408907			63942			4 Watts			
Y	5	TRAFFIC SIGN	COLUMBIA ROAD	GRIMSBY	528383.39	409047			63944			11 Watts			
Y	6	TRAFFIC SIGN	COLUMBIA ROAD	GRIMSBY	528386.47	409041			63945			3 Watts			
Y	7	TRAFFIC SIGN	COLUMBIA ROAD	GRIMSBY	528386.47	409041			63946			3 Watts			

Y	7A	TRAFFIC SIGN	COLUMBIA ROAD	GRIMSBY	528383.39	409047			63949						
Y	8	TRAFFIC SIGN	COLUMBIA ROAD	GRIMSBY	528383.39	409047			63947			11 Watts			
Y	8A	TRAFFIC SIGN	COLUMBIA ROAD	GRIMSBY	528386.47	409041			63950						
Y	9	TRAFFIC SIGN	COLUMBIA ROAD	GRIMSBY	528401	409047			63948			7 Watts			
Y	1	TRAFFIC SIGN	FAIRMONT ROAD	GRIMSBY	528075.76	408971			64149			3 Watts			
Y	1A	TRAFFIC SIGN	FAIRMONT ROAD	GRIMSBY	528075.76	408971			64150						
Y	2	TRAFFIC SIGN	FAIRMONT ROAD	GRIMSBY	528078.59	408964			64151			3 Watts			
Y	2A	TRAFFIC SIGN	FAIRMONT ROAD	GRIMSBY	528078.59	408964			64152						
Y	3	TRAFFIC SIGN	FAIRMONT ROAD	GRIMSBY	528078.59	408964			64153			3 Watts			
Y	4	TRAFFIC SIGN	FAIRMONT ROAD	GRIMSBY	528075.76	408971			64154			3 Watts			
Y	5	TRAFFIC SIGN	FAIRMONT ROAD	GRIMSBY	528353.42	409109			64155			3 Watts			
Y	6	TRAFFIC SIGN	FAIRMONT ROAD	GRIMSBY	528355.9	409104			64156			3 Watts			
Y	7	TRAFFIC SIGN	FAIRMONT ROAD	GRIMSBY	528355.9	409104			64157			3 Watts			
Y	7A	TRAFFIC SIGN	FAIRMONT ROAD	GRIMSBY	528355.9	409104			64158						
Y	8	TRAFFIC SIGN	FAIRMONT ROAD	GRIMSBY	528353.42	409109			64159			3 Watts			
Y	8A	TRAFFIC SIGN	FAIRMONT ROAD	GRIMSBY	528353.42	409109			64160						
Y	9	TRAFFIC SIGN	FAIRMONT ROAD	GRIMSBY	528369.25	409109			64161			3 Watts			
Y	1	TRAFFIC SIGN	DURBAN ROAD	GRIMSBY	528272.11	409228.34			64068			6 Watts			
Y	1A	TRAFFIC SIGN	DURBAN ROAD	GRIMSBY	528272.11	409228.34			64069						
Y	2	TRAFFIC SIGN	DURBAN ROAD	GRIMSBY	528306.74	409245.99			64070			3 Watts			
Y	3	TRAFFIC SIGN	DURBAN ROAD	GRIMSBY	528306.74	409245.99			64071			70 Watts			
Y	4	TRAFFIC SIGN	DURBAN ROAD	GRIMSBY	528315.22	409238.79			64072			3 Watts			
Y	5	TRAFFIC SIGN	DURBAN ROAD	GRIMSBY	528315.22	409238.79			64073			70 Watts			
Y	6	TRAFFIC SIGN	DURBAN ROAD	GRIMSBY	528376.53	409270.55			64074			11 Watts			
Y	6A	TRAFFIC SIGN	DURBAN ROAD	GRIMSBY	528376.53	409270.55			64075						
Y	7	TRAFFIC SIGN	DURBAN ROAD	GRIMSBY	528665.48	409427			65320			3 Watts			
Y	8	TRAFFIC SIGN	DURBAN ROAD	GRIMSBY	528673.28	409420			65321			3 Watts			
Y	9N	TRAFFIC SIGN	DURBAN ROAD	GRIMSBY					69047						
Y	1	TRAFFIC SIGN	MAYFAIR DRIVE EAST	GRIMSBY	523657.46	409304			64513			7 Watts			
Y	1	TRAFFIC SIGN	NELSON WAY	GRIMSBY	523758.54	408137.59			64547			3 Watts			
Y	1	TRAFFIC SIGN	ST NICHOLAS DRIVE	GRIMSBY	523512.63	409192.89			64819			4 Watts			
Y	10	TRAFFIC SIGN	ST NICHOLAS DRIVE	GRIMSBY	523494.06	409210.78			66846			4,700 Watts			
Y	11	TRAFFIC SIGN	ST NICHOLAS DRIVE	GRIMSBY	523508.6	409210.65			64825			11 Watts			
Y	12	TRAFFIC SIGN	ST NICHOLAS DRIVE	GRIMSBY	523509.83	409210.06			64826			4 Watts			
Y	13	TRAFFIC SIGN	ST NICHOLAS DRIVE	GRIMSBY	523510.87	409218			64827			4 Watts			
Y	2	TRAFFIC SIGN	ST NICHOLAS DRIVE	GRIMSBY	523521.56	409194.84			64820			4 Watts			
Y	3	TRAFFIC SIGN	ST NICHOLAS DRIVE	GRIMSBY	523521.74	409194.84			64821			11 Watts			
Y	4	TRAFFIC SIGN	ST NICHOLAS DRIVE	GRIMSBY	523522.32	409191.07			64822			11 Watts			
Y	5	TRAFFIC SIGN	ST NICHOLAS DRIVE	GRIMSBY	523553.69	409137			64823			4 Watts			
Y	6	TRAFFIC SIGN	ST NICHOLAS DRIVE	GRIMSBY					66841			3 Watts			
Y	6A	TRAFFIC SIGN	ST NICHOLAS DRIVE	GRIMSBY					66843						
Y	7	TRAFFIC SIGN	ST NICHOLAS DRIVE	GRIMSBY	523388.38	409226.79			66845			4,700 Watts			
Y	8	TRAFFIC SIGN	ST NICHOLAS DRIVE	GRIMSBY	523500.92	409214.94			64824			4 Watts			
Y	9	TRAFFIC SIGN	ST NICHOLAS DRIVE	GRIMSBY					66842			3 Watts			
Y	9A	TRAFFIC SIGN	ST NICHOLAS DRIVE	GRIMSBY					66844						
Y	10	TRAFFIC SIGN	WYBERS WAY	GRIMSBY	523533.38	409202			65283			4 Watts			
Y	1N	TRAFFIC SIGN	WYBERS WAY	GRIMSBY	523718.65	409371			65275						
Y	2	TRAFFIC SIGN	WYBERS WAY	GRIMSBY	523658.69	409320			65276						
Y	3	TRAFFIC SIGN	WYBERS WAY	GRIMSBY	523647.4	409310			65277						
Y	4N	TRAFFIC SIGN	WYBERS WAY	GRIMSBY					68834						
Y	5N	TRAFFIC SIGN	WYBERS WAY	GRIMSBY	523613.23	409272.89			65279						
Y	6	TRAFFIC SIGN	WYBERS WAY	GRIMSBY	523575.17	409241.36			65280			4 Watts			
Y	7	TRAFFIC SIGN	WYBERS WAY	GRIMSBY	523531.71	409216.12			65370			36 Watts			
Y	8	TRAFFIC SIGN	WYBERS WAY	GRIMSBY	523528.93	409213			65281			4 Watts			
Y	9	TRAFFIC SIGN	WYBERS WAY	GRIMSBY	523527.23	409214			65282			11 Watts			
Y	1	TRAFFIC SIGN	MAYFAIR DRIVE WEST	GRIMSBY	523649.43	409327			64514			4 Watts			
Y	1	TRAFFIC SIGN	AYLESBY ROAD	GREAT COATES	523269.94	409870			63614			7 Watts			
Y	2	TRAFFIC SIGN	AYLESBY ROAD	GREAT COATES	523232.29	409791			63615			6 Watts			
Y	1	TRAFFIC SIGN	CLIFTON ROAD	GRIMSBY	525464.31	408965			63932			7 Watts			
Y	2	TRAFFIC SIGN	CLIFTON ROAD	GRIMSBY	525453.08	408944			63933			4 Watts			
Y	3	TRAFFIC SIGN	CLIFTON ROAD	GRIMSBY	525440.67	408941			63934			4 Watts			
Y	4	TRAFFIC SIGN	CLIFTON ROAD	GRIMSBY	525440.67	408941			63935			4 Watts			
Y	5	TRAFFIC SIGN	CLIFTON ROAD	GRIMSBY	525452.25	408937			63936			11 Watts			
Y	1	TRAFFIC SIGN	COLLEGE STREET	GRIMSBY	526437.84	408757			63937			3 Watts			
Y	1	TRAFFIC SIGN	MARKLEW AVENUE	GRIMSBY					69865			3 Watts			
Y	1	TRAFFIC SIGN	MARSHALL AVENUE	GRIMSBY	525939.27	409264			64508			4 Watts			
Y	1	TRAFFIC SIGN	LITTLEFIELD LANE	GRIMSBY	526327.12	409237			64460			3 Watts			
Y	1A	TRAFFIC SIGN	LITTLEFIELD LANE	GRIMSBY	526327.12	409237			64473						
Y	2	TRAFFIC SIGN	LITTLEFIELD LANE	GRIMSBY	526230.67	409181			64461			4 Watts			
Y	2A	TRAFFIC SIGN	LITTLEFIELD LANE	GRIMSBY	526230.67	409181			64474						
Y	3	TRAFFIC SIGN	LITTLEFIELD LANE	GRIMSBY	525504.04	408894.01			64466			7 Watts			
Y	4	TRAFFIC SIGN	LITTLEFIELD LANE	GRIMSBY	525490.93	408897.62			64467			7 Watts			
Y	5	TRAFFIC SIGN	LITTLEFIELD LANE	GRIMSBY	525457	408835			64468			11 Watts			
Y	1	TRAFFIC SIGN	CROMWELL AVENUE	GRIMSBY	526261.68	409208.03			64005			3 Watts			
Y	1A	TRAFFIC SIGN	CROMWELL AVENUE	GRIMSBY	526261.68	409208.03			64006						
Y	1	TRAFFIC SIGN	ABBEY PARK ROAD	GRIMSBY	526813.59	408493			63645			4 Watts			
Y	1	TRAFFIC SIGN	AINSLIE STREET	GRIMSBY	526981.96	408968			63658			11 Watts			
Y	2	TRAFFIC SIGN	AINSLIE STREET	GRIMSBY	526986.6	408971			63659			6 Watts			
Y	3N	TRAFFIC SIGN	AINSLIE STREET	GRIMSBY	526987.46	408967.51			69142						
Y	4	TRAFFIC SIGN	AINSLIE STREET	GRIMSBY	526995	408963			63661			7 Watts			
Y	4A	TRAFFIC SIGN	AINSLIE STREET	GRIMSBY	526995	408963			63662						
Y	5	TRAFFIC SIGN	AINSLIE STREET	GRIMSBY	527099.58	408576			63664			4 Watts			
Y	6	TRAFFIC SIGN	AINSLIE STREET	GRIMSBY	527095.69	408571.99			63665			11 Watts			
Y	7	TRAFFIC SIGN	AINSLIE STREET	GRIMSBY	527096.88	408568.56			63666			11 Watts			
Y	7A	TRAFFIC SIGN	AINSLIE STREET	GRIMSBY	527096.88	408568.56			63667						
Y	8	TRAFFIC SIGN	AINSLIE STREET	GRIMSBY	527096.35	408567.45			63668			11 Watts			
Y	9	TRAFFIC SIGN	AINSLIE STREET	GRIMSBY	527088.42	408568.48			63669			11 Watts			
Y	9A	TRAFFIC SIGN	AINSLIE STREET	GRIMSBY	527088.42	408568.48			63670						
Y	1	TRAFFIC SIGN	BARGATE AVENUE	GRIMSBY	526557.18	408245			63761			3 Watts			
Y	2	TRAFFIC SIGN	BARGATE AVENUE	GRIMSBY					68215			6 Watts			
Y	3	TRAFFIC SIGN	BARGATE AVENUE	GRIMSBY	526557.18	408245			63763			4 Watts			
Y	4N	TRAFFIC SIGN	BARGATE AVENUE	GRIMSBY	526558.49	408249.31			69131						
Y	5	TRAFFIC SIGN	BARGATE AVENUE	GRIMSBY	526583.89	408248			63765			4 Watts			
Y	6	TRAFFIC SIGN	BARGATE AVENUE	GRIMSBY	526583.38	408252			63766			11 Watts			
Y	7	TRAFFIC SIGN	BARGATE AVENUE	GRIMSBY	526582.69	408257			63767			4 Watts			
Y	8	TRAFFIC SIGN	BARGATE AVENUE	GRIMSBY	526582.69	408257			63768			4 Watts			
Y	1	TRAFFIC SIGN	FAREBROTHER STREET	GRIMSBY	527262	408624			64162			6 Watts			
Y	2	TRAFFIC SIGN	FAREBROTHER STREET	GRIMSBY	527256.57	408623			64163			7 Watts			
Y	3	TRAFFIC SIGN	FAREBROTHER STREET	GRIMSBY	527256.57	408623			64164			7 Watts			
Y	4	TRAFFIC SIGN	FAREBROTHER STREET	GRIMSBY	527262	408624			64165			6 Watts			
Y	5	TRAFFIC SIGN	FAREBROTHER STREET	GRIMSBY	527260.96	408611			64166			6 Watts			
Y	6	TRAFFIC SIGN	FAREBROTHER STREET	GRIMSBY	527266.85	408612			64167			7 Watts			
Y	7	TRAFFIC SIGN	FAREBROTHER STREET	GRIMSBY	527261.39	408592			64168			3 Watts			
Y	8	TRAFFIC SIGN	FAREBROTHER STREET	GRIMSBY	527412.74	408080			64169			4 Watts			
Y	1	TRAFFIC SIGN	LAMBERT ROAD	GRIMSBY	527049.25	408686.62			64418			11 Watts			
Y	1A	TRAFFIC SIGN	LAMBERT ROAD	GRIMSBY	527049.25	408686.62			64422						
Y	2	TRAFFIC SIGN	LAMBERT ROAD	GRIMSBY	527077	408682			64419			11 Watts			
Y	2A	TRAFFIC SIGN	LAMBERT ROAD	GRIMSBY	527077	408682			64423						
Y	3	TRAFFIC SIGN	LAMBERT ROAD	GRIMSBY	527138.44	408710.27			68971			6 Watts			
Y	4	TRAFFIC SIGN	LAMBERT ROAD	GRIMSBY	527156.36	408704.33			64421			7 Watts			

Y	1	TRAFFIC SIGN	PARK DRIVE	GRIMSBY	527016.8	408084.87			64590			3 Watts			
Y	2	TRAFFIC SIGN	PARK DRIVE	GRIMSBY	527107.35	408501			64591			4 Watts			
Y	3	TRAFFIC SIGN	PARK DRIVE	GRIMSBY	527095.66	408545			64592			4 Watts			
Y	4N	TRAFFIC SIGN	PARK DRIVE	GRIMSBY	527102.95	408547.04			64593						
Y	5N	TRAFFIC SIGN	PARK DRIVE	GRIMSBY	527102.54	408549.32			64594						
Y	1	TRAFFIC SIGN	ABBEY DRIVE EAST	GRIMSBY	527018	408832			63638			4 Watts			
Y	2	TRAFFIC SIGN	ABBEY DRIVE EAST	GRIMSBY	527016	408843			63639			4 Watts			
Y	3	TRAFFIC SIGN	ABBEY DRIVE EAST	GRIMSBY	527016	408843			63640			4 Watts			
Y	4	TRAFFIC SIGN	ABBEY DRIVE EAST	GRIMSBY	526992	408825			63641			4 Watts			
Y	5	TRAFFIC SIGN	ABBEY DRIVE EAST	GRIMSBY	526992	408825			63642			4 Watts			
Y	6	TRAFFIC SIGN	ABBEY DRIVE EAST	GRIMSBY	526991	408837			63643			4 Watts			
Y	7	TRAFFIC SIGN	ABBEY DRIVE EAST	GRIMSBY	526991	408837			63644			4 Watts			
Y	1	TRAFFIC SIGN	WINTRINGHAM ROAD	GRIMSBY	527032	408836			65210						
Y	10	TRAFFIC SIGN	WINTRINGHAM ROAD	GRIMSBY	527306.47	408804.49			68970			3 Watts			
Y	11	TRAFFIC SIGN	WINTRINGHAM ROAD	GRIMSBY	527343.18	408810.18			65223			11 Watts			
Y	12	TRAFFIC SIGN	WINTRINGHAM ROAD	GRIMSBY	527342.32	408802.25			65224			11 Watts			
Y	13	TRAFFIC SIGN	WINTRINGHAM ROAD	GRIMSBY	527395.32	408803.98			65226			4 Watts			
Y	13A	TRAFFIC SIGN	WINTRINGHAM ROAD	GRIMSBY	527395.32	408803.98			65227						
Y	14	TRAFFIC SIGN	WINTRINGHAM ROAD	GRIMSBY	527416.78	408803.11			65228			4 Watts			
Y	15	TRAFFIC SIGN	WINTRINGHAM ROAD	GRIMSBY	527416.01	408796.22			65229			6 Watts			
Y	16	TRAFFIC SIGN	WINTRINGHAM ROAD	GRIMSBY	527484.7	408783			65230			7 Watts			
Y	17	TRAFFIC SIGN	WINTRINGHAM ROAD	GRIMSBY	527485.29	408795			65231			7 Watts			
Y	18	TRAFFIC SIGN	WINTRINGHAM ROAD	GRIMSBY	527484.7	408783			65232			7 Watts			
Y	18A	TRAFFIC SIGN	WINTRINGHAM ROAD	GRIMSBY	527484.7	408783			65233						
Y	19	TRAFFIC SIGN	WINTRINGHAM ROAD	GRIMSBY	527485.29	408795			65234			7 Watts			
Y	19A	TRAFFIC SIGN	WINTRINGHAM ROAD	GRIMSBY	527485.29	408795			65235						
Y	2	TRAFFIC SIGN	WINTRINGHAM ROAD	GRIMSBY	527033	408836			65211			11 Watts			
Y	3	TRAFFIC SIGN	WINTRINGHAM ROAD	GRIMSBY	527034	408836			65212			11 Watts			
Y	4	TRAFFIC SIGN	WINTRINGHAM ROAD	GRIMSBY	527040	408831			65213			4 Watts			
Y	5	TRAFFIC SIGN	WINTRINGHAM ROAD	GRIMSBY	527063	408828			65214			7 Watts			
Y	5A	TRAFFIC SIGN	WINTRINGHAM ROAD	GRIMSBY	527063	408828			65215						
Y	6	TRAFFIC SIGN	WINTRINGHAM ROAD	GRIMSBY	527215.46	408822.59			65216			3 Watts			
Y	7	TRAFFIC SIGN	WINTRINGHAM ROAD	GRIMSBY	527214	408814			65217			3 Watts			
Y	8	TRAFFIC SIGN	WINTRINGHAM ROAD	GRIMSBY	527287	408816			65218			4 Watts			
Y	9	TRAFFIC SIGN	WINTRINGHAM ROAD	GRIMSBY	527307.51	408813.81			65219			7 Watts			
Y	1	TRAFFIC SIGN	LEGSBY AVENUE	GRIMSBY	527183.27	408593			64436			7 Watts			
Y	2	TRAFFIC SIGN	LEGSBY AVENUE	GRIMSBY	527172.99	408590			64437			7 Watts			
Y	3	TRAFFIC SIGN	LEGSBY AVENUE	GRIMSBY	527179.61	408573			64438			7 Watts			
Y	4	TRAFFIC SIGN	LEGSBY AVENUE	GRIMSBY	527186.7	408570			64439			7 Watts			
Y	5	TRAFFIC SIGN	LEGSBY AVENUE	GRIMSBY	527229.73	408391			64440			3 Watts			
Y	6	TRAFFIC SIGN	LEGSBY AVENUE	GRIMSBY	527237.88	408393			64441			4 Watts			
Y	7	TRAFFIC SIGN	LEGSBY AVENUE	GRIMSBY	527322.99	408082			64442			4 Watts			
Y	1	TRAFFIC SIGN	WELHOLME AVENUE	GRIMSBY	526660.33	408494			65023			6 Watts			
Y	2	TRAFFIC SIGN	WELHOLME AVENUE	GRIMSBY	526661.53	408490			65024			6 Watts			
Y	3	TRAFFIC SIGN	WELHOLME AVENUE	GRIMSBY	526669.39	408477			65025			6 Watts			
Y	4	TRAFFIC SIGN	WELHOLME AVENUE	GRIMSBY	526660.28	408477			65026			6 Watts			
Y	5	TRAFFIC SIGN	WELHOLME AVENUE	GRIMSBY	526673.17	408454			65027			11 Watts			
Y	6	TRAFFIC SIGN	WELHOLME AVENUE	GRIMSBY	526665.09	408447			65028			6 Watts			
Y	7	TRAFFIC SIGN	WELHOLME AVENUE	GRIMSBY	526669.56	408442			65029			11 Watts			
Y	8	TRAFFIC SIGN	WELHOLME AVENUE	GRIMSBY	526669.91	408438			65030			11 Watts			
Y	1	TRAFFIC SIGN	WELHOLME ROAD	GRIMSBY	527080.06	408559.17			65032			4 Watts			
Y	10	TRAFFIC SIGN	WELHOLME ROAD	GRIMSBY	527748.84	408727.03			67111			6 Watts			
Y	11	TRAFFIC SIGN	WELHOLME ROAD	GRIMSBY	527819.49	408745.36			67113			3 Watts			
Y	11A	TRAFFIC SIGN	WELHOLME ROAD	GRIMSBY	527819.49	408745.36			67117						
Y	12	TRAFFIC SIGN	WELHOLME ROAD	GRIMSBY	527819.49	408745.36			67116			4,700 Watts			
Y	2N	TRAFFIC SIGN	WELHOLME ROAD	GRIMSBY	527085.21	408554.77			68693						
Y	3N	TRAFFIC SIGN	WELHOLME ROAD	GRIMSBY	527089.51	408555.39			68889						
Y	4N	TRAFFIC SIGN	WELHOLME ROAD	GRIMSBY	527108.51	408562.93			68890						
Y	5N	TRAFFIC SIGN	WELHOLME ROAD	GRIMSBY	527113.88	408563.41			68888						
Y	6	TRAFFIC SIGN	WELHOLME ROAD	GRIMSBY	527115.83	408556.01			65037			4 Watts			
Y	7	TRAFFIC SIGN	WELHOLME ROAD	GRIMSBY	527158.26	408570.01			65038			4 Watts			
Y	8	TRAFFIC SIGN	WELHOLME ROAD	GRIMSBY					67110			3 Watts			
Y	8A	TRAFFIC SIGN	WELHOLME ROAD	GRIMSBY					67112						
Y	8B	TRAFFIC SIGN	WELHOLME ROAD	GRIMSBY					67114						
Y	9	TRAFFIC SIGN	WELHOLME ROAD	GRIMSBY					67115			4,700 Watts			
Y	1	TRAFFIC SIGN	REVIGO AVENUE	GRIMSBY	527800	408087			64717			4 Watts			
Y	1A	TRAFFIC SIGN	REVIGO AVENUE	GRIMSBY	527800	408087			64719						
Y	2	TRAFFIC SIGN	REVIGO AVENUE	GRIMSBY	527814	408086			64718			4 Watts			
Y	2A	TRAFFIC SIGN	REVIGO AVENUE	GRIMSBY	527814	408086			64720						
Y	1	TRAFFIC SIGN	WEELSBY AVENUE	GRIMSBY	527412.79	408053			64940			4 Watts			
Y	1	TRAFFIC SIGN	WHITBY DRIVE	GRIMSBY					69012			11 Watts			
Y	1	TRAFFIC SIGN	GRANVILLE STREET	GRIMSBY	527716	408625			64257			3 Watts			
Y	2	TRAFFIC SIGN	GRANVILLE STREET	GRIMSBY	527736.8	408622			64258			4 Watts			
Y	1	TRAFFIC SIGN	LADYSMITH ROAD	GRIMSBY	528147.3	408783			64407			4 Watts			
Y	10N	TRAFFIC SIGN	LADYSMITH ROAD	GRIMSBY	528291.67	408450.02			64412			11 Watts			
Y	11	TRAFFIC SIGN	LADYSMITH ROAD	GRIMSBY	528306.44	408398.71			66828			3 Watts			
Y	11A	TRAFFIC SIGN	LADYSMITH ROAD	GRIMSBY	528306.44	408398.71			66830						
Y	12	TRAFFIC SIGN	LADYSMITH ROAD	GRIMSBY	528306.44	408398.71			66870			4,700 Watts			
Y	13	TRAFFIC SIGN	LADYSMITH ROAD	GRIMSBY	528464.05	407990			64413			3 Watts			
Y	14N	TRAFFIC SIGN	LADYSMITH ROAD	GRIMSBY	528475.16	407986			64414						
Y	15N	TRAFFIC SIGN	LADYSMITH ROAD	GRIMSBY	528477.36	407979.28			64417						
Y	16N	TRAFFIC SIGN	LADYSMITH ROAD	GRIMSBY	528470.05	407977.24			64416						
Y	17N	TRAFFIC SIGN	LADYSMITH ROAD	GRIMSBY	528461.52	407974.48			64415						
Y	2N	TRAFFIC SIGN	LADYSMITH ROAD	GRIMSBY	528149.2	408778			64408			4 Watts			
Y	3	TRAFFIC SIGN	LADYSMITH ROAD	GRIMSBY					66827			3 Watts			
Y	3A	TRAFFIC SIGN	LADYSMITH ROAD	GRIMSBY					66829						
Y	4	TRAFFIC SIGN	LADYSMITH ROAD	GRIMSBY	528255.34	408553.13			66869			4,700 Watts			
Y	5	TRAFFIC SIGN	LADYSMITH ROAD	GRIMSBY	528255.63	408540.01			64409			3 Watts			
Y	6	TRAFFIC SIGN	LADYSMITH ROAD	GRIMSBY	528256.63	408537.81			66853			49 Watts			
Y	7	TRAFFIC SIGN	LADYSMITH ROAD	GRIMSBY	528257.25	408536.51			64410			3 Watts			
Y	8N	TRAFFIC SIGN	LADYSMITH ROAD	GRIMSBY	528290.22	408453.87			64411			11 Watts			
Y	9	TRAFFIC SIGN	LADYSMITH ROAD	GRIMSBY	528291.21	408451.28			65343			11 Watts			
Y	1	TRAFFIC SIGN	PATRICK STREET	GRIMSBY	527433	408441			64652			6 Watts			
Y	2	TRAFFIC SIGN	PATRICK STREET	GRIMSBY	527478	408450			64653			6 Watts			
Y	3	TRAFFIC SIGN	PATRICK STREET	GRIMSBY	527741.19	408531			64654			7 Watts			
Y	4	TRAFFIC SIGN	PATRICK STREET	GRIMSBY	527764.92	408527			64655			7 Watts			
Y	1	TRAFFIC SIGN	WEELSBY ROAD	GRIMSBY	526574.48	408029			64941						
Y	10	TRAFFIC SIGN	WEELSBY ROAD	GRIMSBY	527363.53	408063			64953			4 Watts			
Y	10A	TRAFFIC SIGN	WEELSBY ROAD	GRIMSBY	527363.53	408063			64954						
Y	10B	TRAFFIC SIGN	WEELSBY ROAD	GRIMSBY	527363.53	408063			64955						
Y	11N	TRAFFIC SIGN	WEELSBY ROAD	GRIMSBY					68015						
Y	12N	TRAFFIC SIGN	WEELSBY ROAD	GRIMSBY					68016						
Y	13	TRAFFIC SIGN	WEELSBY ROAD	GRIMSBY	527438.49	408065			64958			3 Watts			
Y	13A	TRAFFIC SIGN	WEELSBY ROAD	GRIMSBY	527438.49	408065			64959						
Y	14	TRAFFIC SIGN	WEELSBY ROAD	GRIMSBY	527461.21	408091.26			64999			3 Watts			
Y	15	TRAFFIC SIGN	WEELSBY ROAD	GRIMSBY	527467.03	408075.81			65001			3 Watts			
Y	16	TRAFFIC SIGN	WEELSBY ROAD	GRIMSBY	527461.21	408091.26			65000			3 Watts			
Y	17	TRAFFIC SIGN	WEELSBY ROAD	GRIMSBY	527467.03	408075.81			65002			3 Watts			
Y	18N	TRAFFIC SIGN	WEELSBY ROAD	GRIMSBY	527529.22	408109.07			68923						
Y	19	TRAFFIC SIGN	WEELSBY ROAD	GRIMSBY	527528.18	408101.17			64961			11 Watts			

Y	2	TRAFFIC SIGN	WEELSBY ROAD	GRIMSBY	526573.49	408014			64942						
Y	20	TRAFFIC SIGN	WEELSBY ROAD	GRIMSBY	527539.59	408108.95			64962			11 Watts			
Y	21	TRAFFIC SIGN	WEELSBY ROAD	GRIMSBY	527538.26	408100.89			64963			11 Watts			
Y	22N	TRAFFIC SIGN	WEELSBY ROAD	GRIMSBY					68017						
Y	23N	TRAFFIC SIGN	WEELSBY ROAD	GRIMSBY	527566.72	408089.88			68924						
Y	24N	TRAFFIC SIGN	WEELSBY ROAD	GRIMSBY					68018						
Y	25	TRAFFIC SIGN	WEELSBY ROAD	GRIMSBY	527578.36	408085.22			64967			11 Watts			
Y	26	TRAFFIC SIGN	WEELSBY ROAD	GRIMSBY	527623.16	408084.26			65003			3 Watts			
Y	27	TRAFFIC SIGN	WEELSBY ROAD	GRIMSBY	527617.36	408068.41			65005			3 Watts			
Y	28	TRAFFIC SIGN	WEELSBY ROAD	GRIMSBY	527623.16	408084.26			65004			3 Watts			
Y	29	TRAFFIC SIGN	WEELSBY ROAD	GRIMSBY	527617.36	408068.41			65006			3 Watts			
Y	3	TRAFFIC SIGN	WEELSBY ROAD	GRIMSBY	526573.93	407998.36			64943						
Y	30N	TRAFFIC SIGN	WEELSBY ROAD	GRIMSBY					68112						
Y	31N	TRAFFIC SIGN	WEELSBY ROAD	GRIMSBY					68113						
Y	32N	TRAFFIC SIGN	WEELSBY ROAD	GRIMSBY					68114						
Y	33N	TRAFFIC SIGN	WEELSBY ROAD	GRIMSBY					68020						
Y	34N	TRAFFIC SIGN	WEELSBY ROAD	GRIMSBY	527856.53	408067.71			68925						
Y	35	TRAFFIC SIGN	WEELSBY ROAD	GRIMSBY	527858.9	408067.2			64973			11 Watts			
Y	36N	TRAFFIC SIGN	WEELSBY ROAD	GRIMSBY	527864.23	408066.81			69125						
Y	37N	TRAFFIC SIGN	WEELSBY ROAD	GRIMSBY	527944.81	408052.01			68926						
Y	38	TRAFFIC SIGN	WEELSBY ROAD	GRIMSBY	527946.6	408051.3			64976			11 Watts			
Y	39N	TRAFFIC SIGN	WEELSBY ROAD	GRIMSBY	527952.21	408050.21			69126						
Y	4	TRAFFIC SIGN	WEELSBY ROAD	GRIMSBY	526580.05	408005.1			64944						
Y	40N	TRAFFIC SIGN	WEELSBY ROAD	GRIMSBY					68021						
Y	41	TRAFFIC SIGN	WEELSBY ROAD	GRIMSBY	528056.4	408030.1			64979			11 Watts			
Y	42	TRAFFIC SIGN	WEELSBY ROAD	GRIMSBY	528061.6	408029.7			64980			4 Watts			
Y	43	TRAFFIC SIGN	WEELSBY ROAD	GRIMSBY	528151.7	408031.5			64981			3 Watts			
Y	44	TRAFFIC SIGN	WEELSBY ROAD	GRIMSBY	528156.5	408031			64982			11 Watts			
Y	45N	TRAFFIC SIGN	WEELSBY ROAD	GRIMSBY					68022						
Y	46N	TRAFFIC SIGN	WEELSBY ROAD	GRIMSBY	528233.81	408015.01			68927						
Y	47	TRAFFIC SIGN	WEELSBY ROAD	GRIMSBY	528235.5	408014.2			64985			11 Watts			
Y	48N	TRAFFIC SIGN	WEELSBY ROAD	GRIMSBY	528238.61	408013.41			69127						
Y	49N	TRAFFIC SIGN	WEELSBY ROAD	GRIMSBY	528367.71	407977.71			68928						
Y	5	TRAFFIC SIGN	WEELSBY ROAD	GRIMSBY	526586.39	408016.45			64945						
Y	50	TRAFFIC SIGN	WEELSBY ROAD	GRIMSBY	528370.11	407976.91			67776			49 Watts			
Y	51N	TRAFFIC SIGN	WEELSBY ROAD	GRIMSBY	528374.81	407975.91			68933						
Y	52	TRAFFIC SIGN	WEELSBY ROAD	GRIMSBY	528461.65	407966.67			64990						
Y	53	TRAFFIC SIGN	WEELSBY ROAD	GRIMSBY	528472.71	407968.91			64991						
Y	54	TRAFFIC SIGN	WEELSBY ROAD	GRIMSBY	528492.34	407974			64992						
Y	55	TRAFFIC SIGN	WEELSBY ROAD	GRIMSBY	528496.02	407975.51			64993						
Y	56	TRAFFIC SIGN	WEELSBY ROAD	GRIMSBY	528774.09	408086			64994			3 Watts			
Y	57N	TRAFFIC SIGN	WEELSBY ROAD	GRIMSBY					68692						
Y	58N	TRAFFIC SIGN	WEELSBY ROAD	GRIMSBY					68891						
Y	59N	TRAFFIC SIGN	WEELSBY ROAD	GRIMSBY	528905.36	408086			64997						
Y	6	TRAFFIC SIGN	WEELSBY ROAD	GRIMSBY	526590.58	408007			64946						
Y	60	TRAFFIC SIGN	WEELSBY ROAD	GRIMSBY	528912.81	408084			64998						
Y	7	TRAFFIC SIGN	WEELSBY ROAD	GRIMSBY	526705.08	408033			64947			4 Watts			
Y	7A	TRAFFIC SIGN	WEELSBY ROAD	GRIMSBY	526705.08	408033			64948						
Y	8	TRAFFIC SIGN	WEELSBY ROAD	GRIMSBY	526962.95	408079			64949			6 Watts			
Y	8A	TRAFFIC SIGN	WEELSBY ROAD	GRIMSBY	526962.95	408079			64950						
Y	9	TRAFFIC SIGN	WEELSBY ROAD	GRIMSBY	527101	408066			64951			4 Watts			
Y	9A	TRAFFIC SIGN	WEELSBY ROAD	GRIMSBY	527101	408066			64952						
Y	1	TRAFFIC SIGN	BRADLEY ROAD	GRIMSBY	524348.32	407625.19			63793			11 Watts			
Y	2	TRAFFIC SIGN	BRADLEY ROAD	GRIMSBY	524348.81	407618.3			63794			11 Watts			
Y	1	TRAFFIC SIGN	BROADWAY	GRIMSBY	524515.16	408306			63809			4 Watts			
Y	10N	TRAFFIC SIGN	BROADWAY	GRIMSBY	523817.89	407580			63814						
Y	11	TRAFFIC SIGN	BROADWAY	GRIMSBY					68031			3 Watts			
Y	12N	TRAFFIC SIGN	BROADWAY	GRIMSBY	523820.51	407564.86			63819						
Y	13	TRAFFIC SIGN	BROADWAY	GRIMSBY	523836.19	407569.59			66480			3 Watts			
Y	2	TRAFFIC SIGN	BROADWAY	GRIMSBY	524051.98	408139.48			66477			4 Watts			
Y	2A	TRAFFIC SIGN	BROADWAY	GRIMSBY	524051.98	408139.48			66476						
Y	3	TRAFFIC SIGN	BROADWAY	GRIMSBY	523952.06	408137.78			63810			4 Watts			
Y	3A	TRAFFIC SIGN	BROADWAY	GRIMSBY	523952.06	408137.78			63811						
Y	4	TRAFFIC SIGN	BROADWAY	GRIMSBY	523769.91	408118.65			63812			3 Watts			
Y	4A	TRAFFIC SIGN	BROADWAY	GRIMSBY	523769.91	408118.65			66478						
Y	5	TRAFFIC SIGN	BROADWAY	GRIMSBY	523748.72	408118.91			63813			3 Watts			
Y	6	TRAFFIC SIGN	BROADWAY	GRIMSBY					67254			3 Watts			
Y	6A	TRAFFIC SIGN	BROADWAY	GRIMSBY					67256						
Y	7	TRAFFIC SIGN	BROADWAY	GRIMSBY					67258			4,700 Watts			
Y	8	TRAFFIC SIGN	BROADWAY	GRIMSBY					67255			3 Watts			
Y	8A	TRAFFIC SIGN	BROADWAY	GRIMSBY					67257						
Y	9	TRAFFIC SIGN	BROADWAY	GRIMSBY					67259			4,700 Watts			
Y	1	TRAFFIC SIGN	CLARENDON ROAD	GRIMSBY	524276.82	407856			63900			4 Watts			
Y	1A	TRAFFIC SIGN	CLARENDON ROAD	GRIMSBY	524276.82	407856			63901						
Y	1	TRAFFIC SIGN	LITTLE COATES ROAD	GRIMSBY	524641.2	408859			64443			11 Watts			
Y	10	TRAFFIC SIGN	LITTLE COATES ROAD	GRIMSBY	524481.87	408187.52			65346			49 Watts			
Y	11N	TRAFFIC SIGN	LITTLE COATES ROAD	GRIMSBY	524481.79	408187.13			69192						
Y	12	TRAFFIC SIGN	LITTLE COATES ROAD	GRIMSBY	524362.76	407774.36			64456			3 Watts			
Y	13	TRAFFIC SIGN	LITTLE COATES ROAD	GRIMSBY	524362.76	407774.36			64457			70 Watts			
Y	14	TRAFFIC SIGN	LITTLE COATES ROAD	GRIMSBY	524350.86	407772.65			65347			3 Watts			
Y	15	TRAFFIC SIGN	LITTLE COATES ROAD	GRIMSBY	524350.86	407772.65			65348			70 Watts			
Y	16	TRAFFIC SIGN	LITTLE COATES ROAD	GRIMSBY	524343.82	407678			64458			6 Watts			
Y	17	TRAFFIC SIGN	LITTLE COATES ROAD	GRIMSBY	524342.41	407673			64459			6 Watts			
Y	2	TRAFFIC SIGN	LITTLE COATES ROAD	GRIMSBY	524642.69	408853			64444			11 Watts			
Y	3N	TRAFFIC SIGN	LITTLE COATES ROAD	GRIMSBY	524614.59	408537.56			69185						
Y	4N	TRAFFIC SIGN	LITTLE COATES ROAD	GRIMSBY	524613.06	408531.78			69186						
Y	5N	TRAFFIC SIGN	LITTLE COATES ROAD	GRIMSBY	524577.78	408383.52			69187						
Y	6N	TRAFFIC SIGN	LITTLE COATES ROAD	GRIMSBY	524577.94	408375.32			69188						
Y	7N	TRAFFIC SIGN	LITTLE COATES ROAD	GRIMSBY	524567.72	408342.51			69189						
Y	8N	TRAFFIC SIGN	LITTLE COATES ROAD	GRIMSBY	524559.98	408340.03			69190						
Y	9N	TRAFFIC SIGN	LITTLE COATES ROAD	GRIMSBY	524483.52	408191.33			69191						
Y	1	TRAFFIC SIGN	LONGFIELD ROAD	GRIMSBY	524212.15	407844			64484			7 Watts			
Y	1A	TRAFFIC SIGN	LONGFIELD ROAD	GRIMSBY	524212.15	407844			64485						
Y	1N	TRAFFIC SIGN	ST MICHAELS ROAD	GRIMSBY					69224						
Y	2	TRAFFIC SIGN	ST MICHAELS ROAD	GRIMSBY	524374.44	407907			64816			4 Watts			
Y	3	TRAFFIC SIGN	ST MICHAELS ROAD	GRIMSBY	524207.42	407888			64818			4 Watts			
Y	3A	TRAFFIC SIGN	ST MICHAELS ROAD	GRIMSBY					66481						
Y	1	TRAFFIC SIGN	WROXHAM AVENUE	GRIMSBY	524326.58	407938			65273			3 Watts			
Y	1A	TRAFFIC SIGN	WROXHAM AVENUE	GRIMSBY	524326.58	407938			65274						
Y	10N	TRAFFIC SIGN	GREAT COATES ROAD	GRIMSBY					68056						
Y	11	TRAFFIC SIGN	GREAT COATES ROAD	GRIMSBY	523720.23	409390			64269			6 Watts			
Y	12N	TRAFFIC SIGN	GREAT COATES ROAD	GRIMSBY					68057						
Y	13N	TRAFFIC SIGN	GREAT COATES ROAD	GRIMSBY					68058						
Y	14N	TRAFFIC SIGN	GREAT COATES ROAD	GRIMSBY					68059						
Y	15	TRAFFIC SIGN	GREAT COATES ROAD	GRIMSBY	523345.6	409823.89			64273			7 Watts			
Y	16	TRAFFIC SIGN	GREAT COATES ROAD	GRIMSBY	523340.46	409846.92			64274			7 Watts			
Y	17N	TRAFFIC SIGN	GREAT COATES ROAD	GRIMSBY					68060						
Y	18	TRAFFIC SIGN	GREAT COATES ROAD	GRIMSBY	523334.45	409840.95			64275			11 Watts			
Y	19N	TRAFFIC SIGN	GREAT COATES ROAD	GRIMSBY					68061						
Y	1N	TRAFFIC SIGN	GREAT COATES ROAD	GRIMSBY	524614.54	408871			64259						

Y	20N	TRAFFIC SIGN	GREAT COATES ROAD	GRIMSBY					68288						
Y	21N	TRAFFIC SIGN	GREAT COATES ROAD	GRIMSBY	523288.52	409871.09			64277			3 Watts			
Y	22	TRAFFIC SIGN	GREAT COATES ROAD	GRIMSBY	523284.61	409865.11			64278			7 Watts			
Y	23	TRAFFIC SIGN	GREAT COATES ROAD	GRIMSBY	523277.43	409886.23			64280			7 Watts			
Y	24	TRAFFIC SIGN	GREAT COATES ROAD	GRIMSBY	523272.32	409882.77			64279						
Y	25N	TRAFFIC SIGN	GREAT COATES ROAD	GRIMSBY					68289						
Y	26	TRAFFIC SIGN	GREAT COATES ROAD	GRIMSBY	523202.29	409918.66			64282			11 Watts			
Y	27	TRAFFIC SIGN	GREAT COATES ROAD	GRIMSBY	523208.21	409927.34			64283			11 Watts			
Y	28	TRAFFIC SIGN	GREAT COATES ROAD	GRIMSBY	523202.29	409918.66			64284			11 Watts			
Y	29	TRAFFIC SIGN	GREAT COATES ROAD	GRIMSBY	523208.21	409927.34			64285			11 Watts			
Y	2N	TRAFFIC SIGN	GREAT COATES ROAD	GRIMSBY	524607.12	408872			64260						
Y	30N	TRAFFIC SIGN	GREAT COATES ROAD	GRIMSBY					68750						
Y	9	TRAFFIC SIGN	GREAT COATES ROAD	GRIMSBY	523741.98	409367			64267			6 Watts			
Y	1	TRAFFIC SIGN	CAMBRIDGE ROAD	GRIMSBY	525443.16	408385.77			63831			11 Watts			
Y	10	TRAFFIC SIGN	CAMBRIDGE ROAD	GRIMSBY					66940			3 Watts			
Y	10A	TRAFFIC SIGN	CAMBRIDGE ROAD	GRIMSBY					66942						
Y	11	TRAFFIC SIGN	CAMBRIDGE ROAD	GRIMSBY	524868.32	408386.55			66944			4,700 Watts			
Y	12N	TRAFFIC SIGN	CAMBRIDGE ROAD	GRIMSBY	524843.96	408391.73			63838						
Y	13	TRAFFIC SIGN	CAMBRIDGE ROAD	GRIMSBY	524837.34	408391.73			65308			49 Watts			
Y	14	TRAFFIC SIGN	CAMBRIDGE ROAD	GRIMSBY	524833.14	408391.73			63839						
Y	15	TRAFFIC SIGN	CAMBRIDGE ROAD	GRIMSBY					67780			3 Watts			
Y	16	TRAFFIC SIGN	CAMBRIDGE ROAD	GRIMSBY					67782			70 Watts			
Y	17	TRAFFIC SIGN	CAMBRIDGE ROAD	GRIMSBY					67781			3 Watts			
Y	18	TRAFFIC SIGN	CAMBRIDGE ROAD	GRIMSBY					67783			70 Watts			
Y	19	TRAFFIC SIGN	CAMBRIDGE ROAD	GRIMSBY					66941			3 Watts			
Y	19A	TRAFFIC SIGN	CAMBRIDGE ROAD	GRIMSBY					66943						
Y	20	TRAFFIC SIGN	CAMBRIDGE ROAD	GRIMSBY	524753.39	408397.06			66945			4,700 Watts			
Y	21N	TRAFFIC SIGN	CAMBRIDGE ROAD	GRIMSBY	524618.71	408372.36			69113						
Y	22N	TRAFFIC SIGN	CAMBRIDGE ROAD	GRIMSBY	524610.33	408365.61			69114						
Y	2N	TRAFFIC SIGN	CAMBRIDGE ROAD	GRIMSBY	525443.22	408384.35			69112						
Y	3	TRAFFIC SIGN	CAMBRIDGE ROAD	GRIMSBY	525437.92	408390.27			69116			3 Watts			
Y	4N	TRAFFIC SIGN	CAMBRIDGE ROAD	GRIMSBY	525436.79	408384.97			69115						
Y	5	TRAFFIC SIGN	CAMBRIDGE ROAD	GRIMSBY	525398.44	408390			63833			4 Watts			
Y	6	TRAFFIC SIGN	CAMBRIDGE ROAD	GRIMSBY	524957.62	408386			63834			7 Watts			
Y	6A	TRAFFIC SIGN	CAMBRIDGE ROAD	GRIMSBY	524957.62	408386			63835						
Y	7N	TRAFFIC SIGN	CAMBRIDGE ROAD	GRIMSBY	524958.15	408391.36			63836						
Y	8	TRAFFIC SIGN	CAMBRIDGE ROAD	GRIMSBY	524957.22	408391.43			65307			49 Watts			
Y	9	TRAFFIC SIGN	CAMBRIDGE ROAD	GRIMSBY	524951.6	408391.56			63837			3 Watts			
Y	1	TRAFFIC SIGN	CARNFORTH CRESCENT	GRIMSBY	525022.27	407791.1			63846			7 Watts			
Y	2	TRAFFIC SIGN	CARNFORTH CRESCENT	GRIMSBY	525013.12	407796.17			63847			7 Watts			
Y	3	TRAFFIC SIGN	CARNFORTH CRESCENT	GRIMSBY	524984.25	407821.36			63848			7 Watts			
Y	4	TRAFFIC SIGN	CARNFORTH CRESCENT	GRIMSBY	524984.25	407821.36			63849			7 Watts			
Y	5	TRAFFIC SIGN	CARNFORTH CRESCENT	GRIMSBY	524984.25	407821.36			63850			7 Watts			
Y	6	TRAFFIC SIGN	CARNFORTH CRESCENT	GRIMSBY	524978.36	407829.73			63851			7 Watts			
Y	7	TRAFFIC SIGN	CARNFORTH CRESCENT	GRIMSBY	524978.36	407829.73			63852			7 Watts			
Y	8	TRAFFIC SIGN	CARNFORTH CRESCENT	GRIMSBY	524978.36	407829.73			63853			7 Watts			
Y	1	TRAFFIC SIGN	COVENTRY AVENUE	GRIMSBY	525374.49	408227.11			63992			3 Watts			
Y	10	TRAFFIC SIGN	COVENTRY AVENUE	GRIMSBY	525137.51	408303.54			64001			4 Watts			
Y	11	TRAFFIC SIGN	COVENTRY AVENUE	GRIMSBY	525137.83	408314.02			64002			4 Watts			
Y	2	TRAFFIC SIGN	COVENTRY AVENUE	GRIMSBY	525382.77	408230.85			63993			4 Watts			
Y	3	TRAFFIC SIGN	COVENTRY AVENUE	GRIMSBY	525345.82	408289.77			63994			4 Watts			
Y	4	TRAFFIC SIGN	COVENTRY AVENUE	GRIMSBY	525353.7	408293.46			63995			4 Watts			
Y	5	TRAFFIC SIGN	COVENTRY AVENUE	GRIMSBY	525245.9	408310.88			63996			4 Watts			
Y	6	TRAFFIC SIGN	COVENTRY AVENUE	GRIMSBY	525177.28	408303.79			63997			11 Watts			
Y	7	TRAFFIC SIGN	COVENTRY AVENUE	GRIMSBY	525177.5	408312.11			63998			4 Watts			
Y	8	TRAFFIC SIGN	COVENTRY AVENUE	GRIMSBY	525137.51	408303.54			63999			4 Watts			
Y	9	TRAFFIC SIGN	COVENTRY AVENUE	GRIMSBY	525137.83	408314.02			64000			6 Watts			
Y	1	TRAFFIC SIGN	CROMER AVENUE	GRIMSBY	525121.52	408277.08			64003			4 Watts			
Y	2	TRAFFIC SIGN	CROMER AVENUE	GRIMSBY	525134.94	408342.85			64004			4 Watts			
Y	1	TRAFFIC SIGN	NORWICH AVENUE	GRIMSBY	525379.26	407764.11			64568			4 Watts			
Y	2	TRAFFIC SIGN	NORWICH AVENUE	GRIMSBY	525387.79	407765.74			64569			3 Watts			
Y	3	TRAFFIC SIGN	NORWICH AVENUE	GRIMSBY	525395.82	407909.75			64570			4 Watts			
Y	4	TRAFFIC SIGN	NORWICH AVENUE	GRIMSBY	525402.04	407908.97			64571			3 Watts			
Y	5	TRAFFIC SIGN	NORWICH AVENUE	GRIMSBY	525395.82	407909.75			64572			4 Watts			
Y	6	TRAFFIC SIGN	NORWICH AVENUE	GRIMSBY	525402.04	407908.97			64573			3 Watts			
Y	1	TRAFFIC SIGN	WESTERN OUTWAY	GRIMSBY	525429	407929			65070			4 Watts			
Y	2	TRAFFIC SIGN	WESTERN OUTWAY	GRIMSBY	525391	407914			65071			4 Watts			
Y	3	TRAFFIC SIGN	WESTERN OUTWAY	GRIMSBY	525387	407923			65072			6 Watts			
Y	4	TRAFFIC SIGN	WESTERN OUTWAY	GRIMSBY	525391	407914			65073			4 Watts			
Y	5	TRAFFIC SIGN	WESTERN OUTWAY	GRIMSBY	525387	407923			65074			6 Watts			
Y	1	TRAFFIC SIGN	CHELMSFORD AVENUE	GRIMSBY	525459	408739			63879			7 Watts			
Y	10N	TRAFFIC SIGN	CHELMSFORD AVENUE	GRIMSBY	525451.85	408367.21			69109						
Y	11	TRAFFIC SIGN	CHELMSFORD AVENUE	GRIMSBY	525455.75	408325			63887			6 Watts			
Y	2	TRAFFIC SIGN	CHELMSFORD AVENUE	GRIMSBY	525456.03	408437			63880			4 Watts			
Y	3	TRAFFIC SIGN	CHELMSFORD AVENUE	GRIMSBY	525456.95	408400.35			69106			3 Watts			
Y	4N	TRAFFIC SIGN	CHELMSFORD AVENUE	GRIMSBY	525452.49	408397.81			69108						
Y	5	TRAFFIC SIGN	CHELMSFORD AVENUE	GRIMSBY	525453.49	408393.53			63882			6 Watts			
Y	6N	TRAFFIC SIGN	CHELMSFORD AVENUE	GRIMSBY	525452.22	408393.07			69110						
Y	7N	TRAFFIC SIGN	CHELMSFORD AVENUE	GRIMSBY	525452.41	408373.95			69111						
Y	8	TRAFFIC SIGN	CHELMSFORD AVENUE	GRIMSBY	525444.85	408373.95			69107			3 Watts			
Y	9	TRAFFIC SIGN	CHELMSFORD AVENUE	GRIMSBY	525451.76	408367.91			63884			4 Watts			
Y	1	TRAFFIC SIGN	BEECHWOOD AVENUE	GRIMSBY	524985.84	407166			63769			7 Watts			
Y	1A	TRAFFIC SIGN	BEECHWOOD AVENUE	GRIMSBY	524985.84	407166			63770						
Y	2	TRAFFIC SIGN	BEECHWOOD AVENUE	GRIMSBY	524977.45	407244			63771			4 Watts			
Y	2A	TRAFFIC SIGN	BEECHWOOD AVENUE	GRIMSBY	524977.45	407244			63772						
Y	1	TRAFFIC SIGN	CROSBY ROAD	GRIMSBY	525702.2	406937.8			64041			3 Watts			
Y	2	TRAFFIC SIGN	CROSBY ROAD	GRIMSBY	525317.3	406915.5			64042			3 Watts			
Y	1	TRAFFIC SIGN	EASTVILLE ROAD	GRIMSBY	525173.11	407259			64090			3 Watts			
Y	1A	TRAFFIC SIGN	EASTVILLE ROAD	GRIMSBY	525173.11	407259			64091						
Y	1	TRAFFIC SIGN	KIRKSTEAD CRESCENT	GRIMSBY	525360.39	407105			64369			3 Watts			
Y	1A	TRAFFIC SIGN	KIRKSTEAD CRESCENT	GRIMSBY	525360.39	407105			64370						
Y	2	TRAFFIC SIGN	KIRKSTEAD CRESCENT	GRIMSBY	525366.42	407112			64371			3 Watts			
Y	2A	TRAFFIC SIGN	KIRKSTEAD CRESCENT	GRIMSBY	525366.42	407112			64372						
Y	1	TRAFFIC SIGN	LANGTON DRIVE	GRIMSBY	525328.39	407414			64424			6 Watts			
Y	1A	TRAFFIC SIGN	LANGTON DRIVE	GRIMSBY	525328.39	407414			64428						
Y	2	TRAFFIC SIGN	LANGTON DRIVE	GRIMSBY	525316.57	407412			64425			6 Watts			
Y	2A	TRAFFIC SIGN	LANGTON DRIVE	GRIMSBY	525316.57	407412			64429						
Y	3	TRAFFIC SIGN	LANGTON DRIVE	GRIMSBY	525324.37	407070			64426			6 Watts			
Y	3A	TRAFFIC SIGN	LANGTON DRIVE	GRIMSBY	525324.37	407070			64430						
Y	4	TRAFFIC SIGN	LANGTON DRIVE	GRIMSBY	525317.56	407079			64427			3 Watts			
Y	4A	TRAFFIC SIGN	LANGTON DRIVE	GRIMSBY	525317.56	407079			64431						
Y	1	TRAFFIC SIGN	PINEWOOD CRESCENT	GRIMSBY	525026.51	407084			64692			6 Watts			
Y	1A	TRAFFIC SIGN	PINEWOOD CRESCENT	GRIMSBY	525026.51	407084			64694						
Y	2	TRAFFIC SIGN	PINEWOOD CRESCENT	GRIMSBY	524927.44	407112			64693			3 Watts			
Y	2A	TRAFFIC SIGN	PINEWOOD CRESCENT	GRIMSBY	524927.44	407112			64695						
Y	1	TRAFFIC SIGN	STAINTON DRIVE	GRIMSBY	525114.88	407420			64828			7 Watts			
Y	1A	TRAFFIC SIGN	STAINTON DRIVE	GRIMSBY	525114.88	407420			64831						
Y	2	TRAFFIC SIGN	STAINTON DRIVE	GRIMSBY	525038.03	407297			64829			4 Watts			
Y	2A	TRAFFIC SIGN	STAINTON DRIVE	GRIMSBY	525038.03	407297			64832						
Y	3	TRAFFIC SIGN	STAINTON DRIVE	GRIMSBY	525067.25	407183			64830			4 Watts			

Y	3A	TRAFFIC SIGN	STAINTON DRIVE	GRIMSBY	525067.25	407183			64833							
Y	1	TRAFFIC SIGN	WINCHESTER AVENUE	GRIMSBY	525226.44	407397			65176			7 Watts				
Y	10	TRAFFIC SIGN	WINCHESTER AVENUE	GRIMSBY	525635.4	407043			65192			7 Watts				
Y	10A	TRAFFIC SIGN	WINCHESTER AVENUE	GRIMSBY	525635.4	407043			65193							
Y	11	TRAFFIC SIGN	WINCHESTER AVENUE	GRIMSBY	525698.84	407105			65194			7 Watts				
Y	11A	TRAFFIC SIGN	WINCHESTER AVENUE	GRIMSBY	525698.84	407105			65195							
Y	12	TRAFFIC SIGN	WINCHESTER AVENUE	GRIMSBY	525727.55	407197			65196			7 Watts				
Y	12A	TRAFFIC SIGN	WINCHESTER AVENUE	GRIMSBY	525727.55	407197			65197							
Y	13	TRAFFIC SIGN	WINCHESTER AVENUE	GRIMSBY	525721.75	407322			65198			7 Watts				
Y	13A	TRAFFIC SIGN	WINCHESTER AVENUE	GRIMSBY	525721.75	407322			65199							
Y	14	TRAFFIC SIGN	WINCHESTER AVENUE	GRIMSBY	525698.32	407407			65200			3 Watts				
Y	14A	TRAFFIC SIGN	WINCHESTER AVENUE	GRIMSBY	525698.32	407407			65201							
Y	2	TRAFFIC SIGN	WINCHESTER AVENUE	GRIMSBY	525221.46	407410			65177			7 Watts				
Y	2A	TRAFFIC SIGN	WINCHESTER AVENUE	GRIMSBY	525221.46	407410			65178							
Y	3	TRAFFIC SIGN	WINCHESTER AVENUE	GRIMSBY	525212.52	407394			65179			7 Watts				
Y	4	TRAFFIC SIGN	WINCHESTER AVENUE	GRIMSBY	525220.25	407358			65180			7 Watts				
Y	4A	TRAFFIC SIGN	WINCHESTER AVENUE	GRIMSBY	525220.25	407358			65181							
Y	5	TRAFFIC SIGN	WINCHESTER AVENUE	GRIMSBY	525240.41	407233			65182			7 Watts				
Y	5A	TRAFFIC SIGN	WINCHESTER AVENUE	GRIMSBY	525240.41	407233			65183							
Y	6	TRAFFIC SIGN	WINCHESTER AVENUE	GRIMSBY	525272.82	407118			65184			7 Watts				
Y	6A	TRAFFIC SIGN	WINCHESTER AVENUE	GRIMSBY	525272.82	407118			65185							
Y	7	TRAFFIC SIGN	WINCHESTER AVENUE	GRIMSBY	525337.29	407047			65186			7 Watts				
Y	7A	TRAFFIC SIGN	WINCHESTER AVENUE	GRIMSBY	525337.29	407047			65187							
Y	8	TRAFFIC SIGN	WINCHESTER AVENUE	GRIMSBY	525433.05	406995			65188			7 Watts				
Y	8A	TRAFFIC SIGN	WINCHESTER AVENUE	GRIMSBY	525433.05	406995			65189							
Y	9	TRAFFIC SIGN	WINCHESTER AVENUE	GRIMSBY	525551.51	406996			65190			7 Watts				
Y	9A	TRAFFIC SIGN	WINCHESTER AVENUE	GRIMSBY	525551.51	406996			65191							
Y	1	TRAFFIC SIGN	WOOTTON ROAD	GRIMSBY	525352.83	407327			65262			7 Watts				
Y	2	TRAFFIC SIGN	WOOTTON ROAD	GRIMSBY	525350.46	407337			65263			3 Watts				
Y	1	TRAFFIC SIGN	WITHERN ROAD	GRIMSBY	525144.5	407414			65236			3 Watts				
Y	1A	TRAFFIC SIGN	WITHERN ROAD	GRIMSBY	525144.5	407414			65241							
Y	2	TRAFFIC SIGN	WITHERN ROAD	GRIMSBY	525134.57	407412			65237			3 Watts				
Y	2A	TRAFFIC SIGN	WITHERN ROAD	GRIMSBY	525134.57	407412			65242							
Y	3	TRAFFIC SIGN	WITHERN ROAD	GRIMSBY	525151.95	407165			65238			6 Watts				
Y	3A	TRAFFIC SIGN	WITHERN ROAD	GRIMSBY	525151.95	407165			65243							
Y	4	TRAFFIC SIGN	WITHERN ROAD	GRIMSBY	525100.3	407135			65239			4 Watts				
Y	4A	TRAFFIC SIGN	WITHERN ROAD	GRIMSBY	525095.57	407144			65244							
Y	5	TRAFFIC SIGN	WITHERN ROAD	GRIMSBY	525095.57	407144			65240			3 Watts				
Y	5A	TRAFFIC SIGN	WITHERN ROAD	GRIMSBY	525100.3	407135			65245							
Y	10N	TRAFFIC SIGN	SUTCLIFFE AVENUE	GRIMSBY	526029.63	407594.37			64854							
Y	11N	TRAFFIC SIGN	SUTCLIFFE AVENUE	GRIMSBY	526025.64	407595.03			64855							
Y	12	TRAFFIC SIGN	SUTCLIFFE AVENUE	GRIMSBY	525995.3	407586.27			64856			11 Watts				
Y	13	TRAFFIC SIGN	SUTCLIFFE AVENUE	GRIMSBY	525991.53	407585.49			64857			11 Watts				
Y	14	TRAFFIC SIGN	SUTCLIFFE AVENUE	GRIMSBY	525924.7	407560			64858			7 Watts				
Y	15	TRAFFIC SIGN	SUTCLIFFE AVENUE	GRIMSBY	525869.13	407536.88			64859			4 Watts				
Y	15A	TRAFFIC SIGN	SUTCLIFFE AVENUE	GRIMSBY	525869.13	407537			64860							
Y	16	TRAFFIC SIGN	SUTCLIFFE AVENUE	GRIMSBY	525816.35	407530			64861			4 Watts				
Y	16A	TRAFFIC SIGN	SUTCLIFFE AVENUE	GRIMSBY	525816.35	407530			64862							
Y	17	TRAFFIC SIGN	SUTCLIFFE AVENUE	GRIMSBY	525716.29	407504			64863			3 Watts				
Y	17A	TRAFFIC SIGN	SUTCLIFFE AVENUE	GRIMSBY	525716.29	407504			64864							
Y	18	TRAFFIC SIGN	SUTCLIFFE AVENUE	GRIMSBY	525643.39	407494			64865			4 Watts				
Y	18A	TRAFFIC SIGN	SUTCLIFFE AVENUE	GRIMSBY	525643.39	407494			64866							
Y	19	TRAFFIC SIGN	SUTCLIFFE AVENUE	GRIMSBY	525472.07	407453.98			64867			11 Watts				
Y	2	TRAFFIC SIGN	SUTCLIFFE AVENUE	GRIMSBY	526462.95	407500			64846			3 Watts				
Y	20N	TRAFFIC SIGN	SUTCLIFFE AVENUE	GRIMSBY					68646							
Y	21N	TRAFFIC SIGN	SUTCLIFFE AVENUE	GRIMSBY					68899							
Y	22	TRAFFIC SIGN	SUTCLIFFE AVENUE	GRIMSBY	525427.36	407444.47			64870			11 Watts				
Y	23	TRAFFIC SIGN	SUTCLIFFE AVENUE	GRIMSBY	525304.24	407421			64871			3 Watts				
Y	23A	TRAFFIC SIGN	SUTCLIFFE AVENUE	GRIMSBY	525304.24	407421			64872							
Y	3	TRAFFIC SIGN	SUTCLIFFE AVENUE	GRIMSBY	526430.8	407492			64847			4 Watts				
Y	4	TRAFFIC SIGN	SUTCLIFFE AVENUE	GRIMSBY	526401.57	407504			64848			3 Watts				
Y	5	TRAFFIC SIGN	SUTCLIFFE AVENUE	GRIMSBY	526361.27	407518			64849			4 Watts				
Y	6	TRAFFIC SIGN	SUTCLIFFE AVENUE	GRIMSBY	526262.07	407553			64850			3 Watts				
Y	7	TRAFFIC SIGN	SUTCLIFFE AVENUE	GRIMSBY	526158.43	407587			64851			4 Watts				
Y	8	TRAFFIC SIGN	SUTCLIFFE AVENUE	GRIMSBY	526082.61	407586			64852			4 Watts				
Y	8A	TRAFFIC SIGN	SUTCLIFFE AVENUE	GRIMSBY	526082.61	407586			64853							
Y	1X	TRAFFIC SIGN	SUTCLIFFE AVENUE / FIRST AVENUE	GRIMSBY	526212.69	407573.34			64873			3 Watts				
Y	2X	TRAFFIC SIGN	SUTCLIFFE AVENUE / FIRST AVENUE	GRIMSBY	526209.69	407571.4			64874			6 Watts				
Y	3X	TRAFFIC SIGN	SUTCLIFFE AVENUE / FIRST AVENUE	GRIMSBY	526206.16	407575.8			64875			3 Watts				
Y	4X	TRAFFIC SIGN	SUTCLIFFE AVENUE / FIRST AVENUE	GRIMSBY	526209.16	407578.2			64876			6 Watts				
Y	1N	TRAFFIC SIGN	EASTWOOD AVENUE	GRIMSBY	526553.46	407925			64094							
Y	2N	TRAFFIC SIGN	EASTWOOD AVENUE	GRIMSBY	526549.14	407917			64095							
Y	3N	TRAFFIC SIGN	EASTWOOD AVENUE	GRIMSBY	526554.88	407915			64096							
Y	4	TRAFFIC SIGN	EASTWOOD AVENUE	GRIMSBY					68216			3 Watts				
Y	4A	TRAFFIC SIGN	EASTWOOD AVENUE	GRIMSBY	526553.96	407904			64098							
Y	1	TRAFFIC SIGN	FIRST AVENUE	GRIMSBY	526174.48	407881			64170			6 Watts				
Y	2	TRAFFIC SIGN	FIRST AVENUE	GRIMSBY	526207.48	407631			64171			4 Watts				
Y	3	TRAFFIC SIGN	FIRST AVENUE	GRIMSBY	526211.09	407527			64172			11 Watts				
Y	1	TRAFFIC SIGN	MILTON ROAD	GRIMSBY	526417.8	407509			64515			3 Watts				
Y	1	TRAFFIC SIGN	PARK AVENUE	GRIMSBY	527008.44	408060			64589			3 Watts				
Y	1	TRAFFIC SIGN	SECOND AVENUE	GRIMSBY	525945.87	407861.88			64769			3 Watts				
Y	10N	TRAFFIC SIGN	SECOND AVENUE	GRIMSBY	526029.87	407499.12			64777							
Y	11N	TRAFFIC SIGN	SECOND AVENUE	GRIMSBY					68644							
Y	2	TRAFFIC SIGN	SECOND AVENUE	GRIMSBY	525956.35	407864.78			64770			4 Watts				
Y	4	TRAFFIC SIGN	SECOND AVENUE	GRIMSBY	526002.43	407648.8			64771			6 Watts				
Y	5N	TRAFFIC SIGN	SECOND AVENUE	GRIMSBY	526005.11	407612.44			64772							
Y	6N	TRAFFIC SIGN	SECOND AVENUE	GRIMSBY	526005.25	407608.56			64773							
Y	7N	TRAFFIC SIGN	SECOND AVENUE	GRIMSBY					68642							
Y	8	TRAFFIC SIGN	SECOND AVENUE	GRIMSBY	526015.01	407538.82			64775			11 Watts				
Y	9N	TRAFFIC SIGN	SECOND AVENUE	GRIMSBY					68643							
Y	1	TRAFFIC SIGN	CHURCH LANE	SCARTHO	526549.11	406303			66085			3 Watts				
Y	2	TRAFFIC SIGN	CHURCH LANE	SCARTHO	526556.2	406293			66086			3 Watts				
Y	3	TRAFFIC SIGN	CHURCH LANE	SCARTHO	526642.65	406307.87			66087			7 Watts				
Y	4	TRAFFIC SIGN	CHURCH LANE	SCARTHO	526648.99	406311			66088			3 Watts				
Y	5	TRAFFIC SIGN	CHURCH LANE	SCARTHO	526655.1	406302.92			66089			3 Watts				
Y	6	TRAFFIC SIGN	CHURCH LANE	SCARTHO	526648.99	406311			66090			3 Watts				
Y	7	TRAFFIC SIGN	CHURCH LANE	SCARTHO	526681.31	406314.1			66091			3 Watts				
Y	8	TRAFFIC SIGN	CHURCH LANE	SCARTHO	526673.93	406304			66092			7 Watts				
Y	9	TRAFFIC SIGN	CHURCH LANE	SCARTHO	526663.89	406298			66093			3 Watts				
Y	1	TRAFFIC SIGN	EDGE AVENUE	GRIMSBY	526773.45	406712			64099			3 Watts				
Y	1A	TRAFFIC SIGN	EDGE AVENUE	GRIMSBY	526773.45	406712			64100							
Y	1	TRAFFIC SIGN	GATE LANE	GRIMSBY	526479.48	406268			64232			4 Watts				
Y	2	TRAFFIC SIGN	GATE LANE	GRIMSBY	526475.7	406260			64233			4 Watts				
Y	3	TRAFFIC SIGN	GATE LANE	GRIMSBY	526526.56	406274.72			64234			3 Watts				
Y	3A	TRAFFIC SIGN	GATE LANE	GRIMSBY	526526.56	406274.72			64237							
Y	4	TRAFFIC SIGN	GATE LANE	GRIMSBY	526527.64	406266.57			64235			3 Watts				
Y	4A	TRAFFIC SIGN	GATE LANE	GRIMSBY	526527.64	406266.57			64239							
Y	5	TRAFFIC SIGN	GATE LANE	GRIMSBY	526526.56	406274.72			64236			3 Watts				
Y	6	TRAFFIC SIGN	GATE LANE	GRIMSBY	526527.64	406266.57			64238			3 Watts				
Y	1N	TRAFFIC SIGN	LOUTH ROAD	GRIMSBY	526508.27	406335			64486			3 Watts				

Y	2	TRAFFIC SIGN	LOUTH ROAD	GRIMSBY	526515.01	406327			64487			4 Watts			
Y	3	TRAFFIC SIGN	LOUTH ROAD	GRIMSBY	526559.83	406284			64488			7 Watts			
Y	4	TRAFFIC SIGN	LOUTH ROAD	GRIMSBY	527241	405255			64489			7 Watts			
Y	1	TRAFFIC SIGN	PINFOLD LANE	GRIMSBY	526538.02	406295.59			66096			3 Watts			
Y	2	TRAFFIC SIGN	PINFOLD LANE	GRIMSBY	526528.59	406293.58			66097			3 Watts			
Y	3	TRAFFIC SIGN	PINFOLD LANE	GRIMSBY	526538.02	406295.59			66098			3 Watts			
Y	4	TRAFFIC SIGN	PINFOLD LANE	GRIMSBY	526528.59	406293.58			66099			3 Watts			
Y	5	TRAFFIC SIGN	PINFOLD LANE	GRIMSBY	526564.35	406162			66100			7 Watts			
Y	6	TRAFFIC SIGN	PINFOLD LANE	GRIMSBY	526620.86	406175			66101			4 Watts			
Y	7	TRAFFIC SIGN	PINFOLD LANE	GRIMSBY	526623.93	406167			66102			3 Watts			
Y	1	TRAFFIC SIGN	ST GILES AVENUE	GRIMSBY	526636.37	406208			64814			7 Watts			
Y	10	TRAFFIC SIGN	WALTHAM ROAD	GRIMSBY	526499.58	406006			64934			11 Watts			
Y	10A	TRAFFIC SIGN	WALTHAM ROAD	GRIMSBY	526499.58	406006			64935						
Y	10B	TRAFFIC SIGN	WALTHAM ROAD	GRIMSBY	526499.58	406006			64936						
Y	11	TRAFFIC SIGN	WALTHAM ROAD	GRIMSBY	526523.42	405907.53			64937			3 Watts			
Y	12	TRAFFIC SIGN	WALTHAM ROAD	GRIMSBY					67352			3 Watts			
Y	12A	TRAFFIC SIGN	WALTHAM ROAD	GRIMSBY					67354						
Y	13	TRAFFIC SIGN	WALTHAM ROAD	GRIMSBY					67350			4,700 Watts			
Y	14	TRAFFIC SIGN	WALTHAM ROAD	GRIMSBY	526541.72	405535.55			64938			6 Watts			
Y	15	TRAFFIC SIGN	WALTHAM ROAD	GRIMSBY					67353			3 Watts			
Y	15A	TRAFFIC SIGN	WALTHAM ROAD	GRIMSBY					67355						
Y	16	TRAFFIC SIGN	WALTHAM ROAD	GRIMSBY					67351			4,700 Watts			
Y	17	TRAFFIC SIGN	WALTHAM ROAD	GRIMSBY	526566.72	405300			64939			3 Watts			
Y	1N	TRAFFIC SIGN	WALTHAM ROAD	GRIMSBY	526482.7	406323			64928			3 Watts			
Y	2	TRAFFIC SIGN	WALTHAM ROAD	GRIMSBY	526476.32	406318			64929			11 Watts			
Y	3	TRAFFIC SIGN	WALTHAM ROAD	GRIMSBY	526467.17	406220			64930			4 Watts			
Y	3A	TRAFFIC SIGN	WALTHAM ROAD	GRIMSBY					67865						
Y	4N	TRAFFIC SIGN	WALTHAM ROAD	GRIMSBY	526461.29	406176.81			65355			4 Watts			
Y	5N	TRAFFIC SIGN	WALTHAM ROAD	GRIMSBY	526461.51	406174.82			65356			4 Watts			
Y	6	TRAFFIC SIGN	WALTHAM ROAD	GRIMSBY	526489.97	406087.17			64931			3 Watts			
Y	7	TRAFFIC SIGN	WALTHAM ROAD	GRIMSBY	526489.97	406087.17			64932			70 Watts			
Y	8	TRAFFIC SIGN	WALTHAM ROAD	GRIMSBY	526480.88	406082			65357			3 Watts			
Y	9	TRAFFIC SIGN	WALTHAM ROAD	GRIMSBY	526480.88	406082			64933			70 Watts			
Y	1	TRAFFIC SIGN	SOUTHFIELD AVENUE	GRIMSBY	526988.76	405573			64809			6 Watts			
Y	1	TRAFFIC SIGN	CROSS LANE	GRIMSBY	526574.98	406237			66094			3 Watts			
Y	2	TRAFFIC SIGN	CROSS LANE	GRIMSBY	526569.9	406246			66095			3 Watts			
Y	1	TRAFFIC SIGN	SCARTHO ROAD	GRIMSBY	526445.52	407850			64756						
Y	10N	TRAFFIC SIGN	SCARTHO ROAD	GRIMSBY	526529.58	407049.95			67094						
Y	11N	TRAFFIC SIGN	SCARTHO ROAD	GRIMSBY	526529.42	407046.95			67095						
Y	12N	TRAFFIC SIGN	SCARTHO ROAD	GRIMSBY					68107						
Y	13N	TRAFFIC SIGN	SCARTHO ROAD	GRIMSBY					68108						
Y	14N	TRAFFIC SIGN	SCARTHO ROAD	GRIMSBY					68109						
Y	2	TRAFFIC SIGN	SCARTHO ROAD	GRIMSBY	526443.25	407844			64757						
Y	3	TRAFFIC SIGN	SCARTHO ROAD	GRIMSBY	526453.56	407752.62			64758			4 Watts			
Y	3A	TRAFFIC SIGN	SCARTHO ROAD	GRIMSBY	526453.56	407752.62			64768						
Y	4N	TRAFFIC SIGN	SCARTHO ROAD	GRIMSBY					68639						
Y	5	TRAFFIC SIGN	SCARTHO ROAD	GRIMSBY					68428			49 Watts			
Y	6N	TRAFFIC SIGN	SCARTHO ROAD	GRIMSBY					68900						
Y	7N	TRAFFIC SIGN	SCARTHO ROAD	GRIMSBY	526513.31	407548.72			64762						
Y	8N	TRAFFIC SIGN	SCARTHO ROAD	GRIMSBY	526514.74	407542.67			64763						
Y	9N	TRAFFIC SIGN	SCARTHO ROAD	GRIMSBY					68640						
Y	1	TRAFFIC SIGN	WREN CRESCENT	GRIMSBY	526022.57	406766.33			65264			7 Watts			
Y	2	TRAFFIC SIGN	WREN CRESCENT	GRIMSBY	526024.11	406786.45			65265			7 Watts			
Y	3	TRAFFIC SIGN	WREN CRESCENT	GRIMSBY	526006.9	406781.2			65266			7 Watts			
Y	4	TRAFFIC SIGN	WREN CRESCENT	GRIMSBY	525823.07	406765.37			65267			7 Watts			
Y	5	TRAFFIC SIGN	WREN CRESCENT	GRIMSBY	525817.48	406785			65268			7 Watts			
Y	6	TRAFFIC SIGN	WREN CRESCENT	GRIMSBY	525803.75	406773.07			65269			7 Watts			
Y	7	TRAFFIC SIGN	WREN CRESCENT	GRIMSBY	525704.07	406738.49			65270			7 Watts			
Y	8	TRAFFIC SIGN	WREN CRESCENT	GRIMSBY	525690.68	406751.32			65271			7 Watts			
Y	9	TRAFFIC SIGN	WREN CRESCENT	GRIMSBY	525682.41	406734.35			65272			7 Watts			
Y	1N	TRAFFIC SIGN	MATTHEW TELFORD PARK	GRIMSBY	526489.7	406657			64509						
Y	2N	TRAFFIC SIGN	MATTHEW TELFORD PARK	GRIMSBY	526485.51	406652			64510						
Y	3N	TRAFFIC SIGN	MATTHEW TELFORD PARK	GRIMSBY	526479.41	406660			64511						
Y	4N	TRAFFIC SIGN	MATTHEW TELFORD PARK	GRIMSBY	526473.17	406656			64512						
Y	1	TRAFFIC SIGN	LAVENHAM ROAD	GRIMSBY	525823.71	405624.48			64433			11 Watts			
Y	2	TRAFFIC SIGN	LAVENHAM ROAD	GRIMSBY	525823.71	405624.48			65344			4,700 Watts			
Y	3	TRAFFIC SIGN	LAVENHAM ROAD	GRIMSBY	525867.06	405482.23			64434			11 Watts			
Y	3A	TRAFFIC SIGN	LAVENHAM ROAD	GRIMSBY	525867.06	405482.23			64435						
Y	1N	TRAFFIC SIGN	SPRINGFIELD ROAD	GRIMSBY					68645						
Y	2N	TRAFFIC SIGN	SPRINGFIELD ROAD	GRIMSBY					68892						
Y	1N	TRAFFIC SIGN	MOODY LANE	GRIMSBY	526143.34	410446			64520						
Y	2	TRAFFIC SIGN	MOODY LANE	GRIMSBY	526217.74	410664			64521			6 Watts			
Y	2A	TRAFFIC SIGN	MOODY LANE	GRIMSBY	526209.04	410656.52			64522						
Y	3	TRAFFIC SIGN	MOODY LANE	GRIMSBY	526268.22	410788			64523			3 Watts			
Y	3A	TRAFFIC SIGN	MOODY LANE	GRIMSBY	526268.22	410788			64524						
Y	1	TRAFFIC SIGN	ESTATE ROAD 1	GRIMSBY	524564.83	411029			64136			3 Watts			
Y	2	TRAFFIC SIGN	ESTATE ROAD 1	GRIMSBY	525286.67	410781			64141						
Y	2	TRAFFIC SIGN	ESTATE ROAD 2	GRIMSBY	525284	410656			64143			4 Watts			
Y	1	TRAFFIC SIGN	ESTATE ROAD 5	GRIMSBY	524412.08	410777			64146			3 Watts			
Y	2	TRAFFIC SIGN	ESTATE ROAD 5	GRIMSBY	524506.15	410777			64147			3 Watts			
Y	2A	TRAFFIC SIGN	ESTATE ROAD 5	GRIMSBY	524506.15	410777			66278						
Y	1	TRAFFIC SIGN	ESTUARY WAY	GRIMSBY	525712.47	410828.6			64148			7 Watts			
Y	1	TRAFFIC SIGN	ATHENA DRIVE	GRIMSBY	525459.16	410807			63732			4 Watts			
Y	2	TRAFFIC SIGN	ATHENA DRIVE	GRIMSBY	525478.45	410838			63733			4 Watts			
Y	3	TRAFFIC SIGN	ATHENA DRIVE	GRIMSBY	525471.98	410881.21			63734			4 Watts			
Y	1	TRAFFIC SIGN	GATE WAY	GRIMSBY	526271.29	410845			64240			3 Watts			
Y	1	TRAFFIC SIGN	WESTWARD HO	GRIMSBY	526105.79	408281.77			65129			4 Watts			
Y	10	TRAFFIC SIGN	WESTWARD HO	GRIMSBY	525703.09	408374			65139			4 Watts			
Y	10A	TRAFFIC SIGN	WESTWARD HO	GRIMSBY	525703.09	408374			65140						
Y	11	TRAFFIC SIGN	WESTWARD HO	GRIMSBY	525573.6	408376			65141			4 Watts			
Y	11A	TRAFFIC SIGN	WESTWARD HO	GRIMSBY	525573.6	408376			65142						
Y	12	TRAFFIC SIGN	WESTWARD HO	GRIMSBY	525506.58	408378			65143			11 Watts			
Y	13N	TRAFFIC SIGN	WESTWARD HO	GRIMSBY	525467.52	408382.72			69104						
Y	14	TRAFFIC SIGN	WESTWARD HO	GRIMSBY	525462.22	408382.13			65145			3 Watts			
Y	15	TRAFFIC SIGN	WESTWARD HO	GRIMSBY	525462.62	408376.17			65146			4 Watts			
Y	16N	TRAFFIC SIGN	WESTWARD HO	GRIMSBY	525462.61	408382.81			69105						
Y	1A	TRAFFIC SIGN	WESTWARD HO	GRIMSBY	526105.79	408281.77			65130						
Y	2	TRAFFIC SIGN	WESTWARD HO	GRIMSBY	526103.99	408293.92			65131			7 Watts			
Y	2A	TRAFFIC SIGN	WESTWARD HO	GRIMSBY	526103.99	408293.92			65132						
Y	3N	TRAFFIC SIGN	WESTWARD HO	GRIMSBY					67947						
Y	4	TRAFFIC SIGN	WESTWARD HO	GRIMSBY	526102.47	408287			65362			36 Watts			
Y	5N	TRAFFIC SIGN	WESTWARD HO	GRIMSBY					67933						
Y	6N	TRAFFIC SIGN	WESTWARD HO	GRIMSBY					67934						
Y	7	TRAFFIC SIGN	WESTWARD HO	GRIMSBY	525709.47	408379			65363			11 Watts			
Y	8N	TRAFFIC SIGN	WESTWARD HO	GRIMSBY					67935						
Y	9	TRAFFIC SIGN	WESTWARD HO	GRIMSBY	525703.56	408386			65137			4 Watts			
Y	9A	TRAFFIC SIGN	WESTWARD HO	GRIMSBY	525703.56	408386			65138						
Y	1N	TRAFFIC SIGN	MARKET HALL SERVICE ROAD	GRIMSBY	526609.51	409340.47			69087			4 Watts			
Y	2N	TRAFFIC SIGN	MARKET HALL SERVICE ROAD	GRIMSBY	526616.05	409340.34			69088			4 Watts			
Y	3	TRAFFIC SIGN	MARKET HALL SERVICE ROAD	GRIMSBY	526615.54	409351.91			64495			4 Watts			

Y	4	TRAFFIC SIGN	MARKET HALL SERVICE ROAD	GRIMSBY	526621.85	409327			64499			4 Watts			
Y	1	TRAFFIC SIGN	ASDA ACCESS ROADS TO	GRIMSBY	527489.1	409588			63729			3 Watts			
Y	2	TRAFFIC SIGN	ASDA ACCESS ROADS TO	GRIMSBY	527496.69	409590			63730			3 Watts			
Y	3	TRAFFIC SIGN	ASDA ACCESS ROADS TO	GRIMSBY	527493.28	409596			63731			3 Watts			
Y	1	TRAFFIC SIGN	LACEBY ROAD	GRIMSBY	526420.41	407873			64373			11 Watts			
Y	10N	TRAFFIC SIGN	LACEBY ROAD	GRIMSBY					67928						
Y	11N	TRAFFIC SIGN	LACEBY ROAD	GRIMSBY	525796.92	407832.25			64385			4 Watts			
Y	12N	TRAFFIC SIGN	LACEBY ROAD	GRIMSBY	525793.79	407831.23			64386			4 Watts			
Y	13N	TRAFFIC SIGN	LACEBY ROAD	GRIMSBY	525590.96	407769.58			66961						
Y	14N	TRAFFIC SIGN	LACEBY ROAD	GRIMSBY	525557.36	407760.84			66962						
Y	15	TRAFFIC SIGN	LACEBY ROAD	GRIMSBY	525402.74	407743			64387			3 Watts			
Y	16N	TRAFFIC SIGN	LACEBY ROAD	GRIMSBY	525399.85	407742			64388			3 Watts			
Y	17N	TRAFFIC SIGN	LACEBY ROAD	GRIMSBY					68747						
Y	18N	TRAFFIC SIGN	LACEBY ROAD	GRIMSBY					68893						
Y	19N	TRAFFIC SIGN	LACEBY ROAD	GRIMSBY	524880.72	407604.08			68929						
Y	2	TRAFFIC SIGN	LACEBY ROAD	GRIMSBY	526360.37	407867			64374			4 Watts			
Y	20N	TRAFFIC SIGN	LACEBY ROAD	GRIMSBY	524876.46	407602.03			68932						
Y	21N	TRAFFIC SIGN	LACEBY ROAD	GRIMSBY	524809	407586.18			64393			4 Watts			
Y	22N	TRAFFIC SIGN	LACEBY ROAD	GRIMSBY	524800.06	407586.61			64394			4 Watts			
Y	23N	TRAFFIC SIGN	LACEBY ROAD	GRIMSBY					68748						
Y	24	TRAFFIC SIGN	LACEBY ROAD	GRIMSBY	524724.69	407589.65			65342			11 Watts			
Y	25N	TRAFFIC SIGN	LACEBY ROAD	GRIMSBY					68894						
Y	26N	TRAFFIC SIGN	LACEBY ROAD	GRIMSBY					67936						
Y	27N	TRAFFIC SIGN	LACEBY ROAD	GRIMSBY					67929						
Y	28N	TRAFFIC SIGN	LACEBY ROAD	GRIMSBY	524374.7	407655			64399						
Y	29	TRAFFIC SIGN	LACEBY ROAD	GRIMSBY	524368.08	407656			64400			11 Watts			
Y	30N	TRAFFIC SIGN	LACEBY ROAD	GRIMSBY	524321.04	407639.62			64401						
Y	31N	TRAFFIC SIGN	LACEBY ROAD	GRIMSBY	524319.57	407646.17			64402						
Y	32N	TRAFFIC SIGN	LACEBY ROAD	GRIMSBY					67930						
Y	33N	TRAFFIC SIGN	LACEBY ROAD	GRIMSBY					67931						
Y	34N	TRAFFIC SIGN	LACEBY ROAD	GRIMSBY					68690						
Y	35N	TRAFFIC SIGN	LACEBY ROAD	GRIMSBY	523779	407538			64406						
Y	36	TRAFFIC SIGN	LACEBY ROAD	GRIMSBY	523734.43	407519.07			66957			4 Watts			
Y	37	TRAFFIC SIGN	LACEBY ROAD	GRIMSBY	523732.36	407529.52			66958			7 Watts			
Y	38	TRAFFIC SIGN	LACEBY ROAD	GRIMSBY	523732.36	407529.52			66959			7 Watts			
Y	39	TRAFFIC SIGN	LACEBY ROAD	GRIMSBY	523729.48	407543.85			66960			4 Watts			
Y	3N	TRAFFIC SIGN	LACEBY ROAD	GRIMSBY					68691						
Y	4	TRAFFIC SIGN	LACEBY ROAD	GRIMSBY	526253.61	407857			64378			4 Watts			
Y	40N	TRAFFIC SIGN	LACEBY ROAD	GRIMSBY	523336.18	407447.12			66279						
Y	5N	TRAFFIC SIGN	LACEBY ROAD	GRIMSBY	526170.99	407894			64379						
Y	6N	TRAFFIC SIGN	LACEBY ROAD	GRIMSBY	526149.83	407895			64380						
Y	7N	TRAFFIC SIGN	LACEBY ROAD	GRIMSBY	525954.12	407889			64381			4 Watts			
Y	8N	TRAFFIC SIGN	LACEBY ROAD	GRIMSBY					67927						
Y	9N	TRAFFIC SIGN	LACEBY ROAD	GRIMSBY	525932.13	407881			64383						
Y	1	TRAFFIC SIGN	PEAKS PARKWAY FROM VICTORIA	GRIMSBY	527219.08	409545.22			64656			11 Watts			
Y	10	TRAFFIC SIGN	PEAKS PARKWAY FROM VICTORIA	GRIMSBY	527307.62	408949.83			64666			14 Watts			
Y	10A	TRAFFIC SIGN	PEAKS PARKWAY FROM VICTORIA	GRIMSBY	527307.62	408949.83			64667						
Y	11	TRAFFIC SIGN	PEAKS PARKWAY FROM VICTORIA	GRIMSBY	527320.28	408952.81			64668			14 Watts			
Y	12	TRAFFIC SIGN	PEAKS PARKWAY FROM VICTORIA	GRIMSBY	527307.62	408949.83			64669			14 Watts			
Y	13N	TRAFFIC SIGN	PEAKS PARKWAY FROM VICTORIA	GRIMSBY	527391.84	408663.02			68921						
Y	14N	TRAFFIC SIGN	PEAKS PARKWAY FROM VICTORIA	GRIMSBY	527394.19	408654.12			69122						
Y	15N	TRAFFIC SIGN	PEAKS PARKWAY FROM VICTORIA	GRIMSBY	527406.12	408621.01			68922						
Y	16N	TRAFFIC SIGN	PEAKS PARKWAY FROM VICTORIA	GRIMSBY	527408.64	408612.28			69123						
Y	17	TRAFFIC SIGN	PEAKS PARKWAY FROM VICTORIA	GRIMSBY	527546	408121			64674			11 Watts			
Y	18	TRAFFIC SIGN	PEAKS PARKWAY FROM VICTORIA	GRIMSBY	527548	408115			64675			11 Watts			
Y	19N	TRAFFIC SIGN	PEAKS PARKWAY FROM VICTORIA	GRIMSBY					68013						
Y	20N	TRAFFIC SIGN	PEAKS PARKWAY FROM VICTORIA	GRIMSBY					68014						
Y	21	TRAFFIC SIGN	PEAKS PARKWAY FROM VICTORIA	GRIMSBY	527627	407847			64678			3 Watts			
Y	21A	TRAFFIC SIGN	PEAKS PARKWAY FROM VICTORIA	GRIMSBY	527627	407847			64679						
Y	22	TRAFFIC SIGN	PEAKS PARKWAY FROM VICTORIA	GRIMSBY	527611	407844			64680			3 Watts			
Y	22A	TRAFFIC SIGN	PEAKS PARKWAY FROM VICTORIA	GRIMSBY	527611	407844			64681						
Y	23	TRAFFIC SIGN	PEAKS PARKWAY FROM VICTORIA	GRIMSBY	527627	407847			64682			3 Watts			
Y	23A	TRAFFIC SIGN	PEAKS PARKWAY FROM VICTORIA	GRIMSBY	527627	407847			64683						
Y	24	TRAFFIC SIGN	PEAKS PARKWAY FROM VICTORIA	GRIMSBY	527611	407844			64684			3 Watts			
Y	24A	TRAFFIC SIGN	PEAKS PARKWAY FROM VICTORIA	GRIMSBY	527611	407844			64685						
Y	25	TRAFFIC SIGN	PEAKS PARKWAY FROM VICTORIA	GRIMSBY	527673	407677			64686			14 Watts			
Y	26	TRAFFIC SIGN	PEAKS PARKWAY FROM VICTORIA	GRIMSBY	527659	407671			64687			14 Watts			
Y	27	TRAFFIC SIGN	PEAKS PARKWAY FROM VICTORIA	GRIMSBY	527673	407677			64688			14 Watts			
Y	27A	TRAFFIC SIGN	PEAKS PARKWAY FROM VICTORIA	GRIMSBY	527673	407677			64689						
Y	28	TRAFFIC SIGN	PEAKS PARKWAY FROM VICTORIA	GRIMSBY	527659	407671			64690			14 Watts			
Y	28A	TRAFFIC SIGN	PEAKS PARKWAY FROM VICTORIA	GRIMSBY	527659	407671			64691						
Y	2N	TRAFFIC SIGN	PEAKS PARKWAY FROM VICTORIA	GRIMSBY	527230.93	409520.46			68920						
Y	3	TRAFFIC SIGN	PEAKS PARKWAY FROM VICTORIA	GRIMSBY	527250	409443			64658			4 Watts			
Y	4	TRAFFIC SIGN	PEAKS PARKWAY FROM VICTORIA	GRIMSBY	527266	409376			64659			11 Watts			
Y	5N	TRAFFIC SIGN	PEAKS PARKWAY FROM VICTORIA	GRIMSBY	527269.88	409144.53			68011						
Y	6N	TRAFFIC SIGN	PEAKS PARKWAY FROM VICTORIA	GRIMSBY	527271.51	409133.82			68012						
Y	7N	TRAFFIC SIGN	PEAKS PARKWAY FROM VICTORIA	GRIMSBY	527277.21	409104.43			69124						
Y	8N	TRAFFIC SIGN	PEAKS PARKWAY FROM VICTORIA	GRIMSBY	527278.11	409098.05			64663						
Y	9	TRAFFIC SIGN	PEAKS PARKWAY FROM VICTORIA	GRIMSBY	527320.28	408952.81			64664			14 Watts			
Y	9A	TRAFFIC SIGN	PEAKS PARKWAY FROM VICTORIA	GRIMSBY	527320.28	408952.81			64665						
Y	1	TRAFFIC SIGN	BARCROFT STREET	CLEETHORPES	529202.56	410153			63071			3 Watts			
Y	2	TRAFFIC SIGN	BARCROFT STREET	CLEETHORPES	529192.52	410156			63072			4 Watts			
Y	3	TRAFFIC SIGN	BARCROFT STREET	CLEETHORPES	529100.1	409945			63073			7 Watts			
Y	4	TRAFFIC SIGN	BARCROFT STREET	CLEETHORPES	529091.36	409949			63074			7 Watts			
Y	5	TRAFFIC SIGN	BARCROFT STREET	CLEETHORPES	528996.6	409734			63075			11 Watts			
Y	6	TRAFFIC SIGN	BARCROFT STREET	CLEETHORPES	528980.52	409725			63076			4 Watts			
Y	1	TRAFFIC SIGN	BLUNDELL AVENUE	CLEETHORPES	529404.36	410076			63085			3 Watts			
Y	2	TRAFFIC SIGN	BLUNDELL AVENUE	CLEETHORPES	529396.08	410080			63086			4 Watts			
Y	3	TRAFFIC SIGN	BLUNDELL AVENUE	CLEETHORPES	529294.31	409851			63087			3 Watts			
Y	4	TRAFFIC SIGN	BLUNDELL AVENUE	CLEETHORPES	529284.65	409854.71			68032			3 Watts			
Y	1	TRAFFIC SIGN	BRAMHALL STREET	CLEETHORPES	529515.77	409488			63117			4 Watts			
Y	2	TRAFFIC SIGN	BRAMHALL STREET	CLEETHORPES	529492.96	409463			63118			4 Watts			
Y	10	TRAFFIC SIGN	BRERETON AVENUE	CLEETHORPES					67716			4,700 Watts			
Y	11N	TRAFFIC SIGN	BRERETON AVENUE	CLEETHORPES	529256.75	409596			63126						
Y	12N	TRAFFIC SIGN	BRERETON AVENUE	CLEETHORPES	529262.43	409594			63127			3 Watts			
Y	13	TRAFFIC SIGN	BRERETON AVENUE	CLEETHORPES	529432.4	409516			63128			3 Watts			
Y	14	TRAFFIC SIGN	BRERETON AVENUE	CLEETHORPES	529446.11	409498			63129			3 Watts			
Y	15	TRAFFIC SIGN	BRERETON AVENUE	CLEETHORPES	529493.15	409486			63130			3 Watts			
Y	16	TRAFFIC SIGN	BRERETON AVENUE	CLEETHORPES	529517.24	409462			63131			11 Watts			
Y	17	TRAFFIC SIGN	BRERETON AVENUE	CLEETHORPES	529560.39	409422			63133			4 Watts			
Y	18	TRAFFIC SIGN	BRERETON AVENUE	CLEETHORPES	529569.61	409396			63134			3 Watts			
Y	19	TRAFFIC SIGN	BRERETON AVENUE	CLEETHORPES					66847			3 Watts			
Y	19A	TRAFFIC SIGN	BRERETON AVENUE	CLEETHORPES					66849						
Y	1N	TRAFFIC SIGN	BRERETON AVENUE	CLEETHORPES	528695.79	409869.89			63119						
Y	2	TRAFFIC SIGN	BRERETON AVENUE	CLEETHORPES	528696.83	409869.75			63120			49 Watts			
Y	20	TRAFFIC SIGN	BRERETON AVENUE	CLEETHORPES	529817.38	409098.74			66851			4,700 Watts			
Y	21	TRAFFIC SIGN	BRERETON AVENUE	CLEETHORPES					66848			3 Watts			
Y	21A	TRAFFIC SIGN	BRERETON AVENUE	CLEETHORPES					66850						
Y	22	TRAFFIC SIGN	BRERETON AVENUE	CLEETHORPES	529883.68	408999.61			66852			4,700 Watts			
Y	3	TRAFFIC SIGN	BRERETON AVENUE	CLEETHORPES	528695.24	409864.9			63121			4 Watts			

Y	4N	TRAFFIC SIGN	BRERETON AVENUE	CLEETHORPES	528698.04	409869.26			63122						
Y	5	TRAFFIC SIGN	BRERETON AVENUE	CLEETHORPES	528846.23	409798			63124						
Y	6	TRAFFIC SIGN	BRERETON AVENUE	CLEETHORPES	528849.66	409797			63125						
Y	7	TRAFFIC SIGN	BRERETON AVENUE	CLEETHORPES					67711			3 Watts			
Y	7A	TRAFFIC SIGN	BRERETON AVENUE	CLEETHORPES					67713						
Y	8	TRAFFIC SIGN	BRERETON AVENUE	CLEETHORPES					67715			4,700 Watts			
Y	9	TRAFFIC SIGN	BRERETON AVENUE	CLEETHORPES					67712			3 Watts			
Y	9A	TRAFFIC SIGN	BRERETON AVENUE	CLEETHORPES					67714						
Y	1	TRAFFIC SIGN	DAUBNEY STREET	CLEETHORPES	529132.95	410174			63192			7 Watts			
Y	2	TRAFFIC SIGN	DAUBNEY STREET	CLEETHORPES	529122.31	410177			63193			7 Watts			
Y	3	TRAFFIC SIGN	DAUBNEY STREET	CLEETHORPES	529034.26	409975			63194			7 Watts			
Y	4	TRAFFIC SIGN	DAUBNEY STREET	CLEETHORPES	529025.28	409980			63195			7 Watts			
Y	5	TRAFFIC SIGN	DAUBNEY STREET	CLEETHORPES	528930.41	409765			63196			4 Watts			
Y	6	TRAFFIC SIGN	DAUBNEY STREET	CLEETHORPES	528914.57	409757			63197			4 Watts			
Y	1	TRAFFIC SIGN	DUGARD ROAD	CLEETHORPES	528887.16	409386			63216			4 Watts			
Y	2	TRAFFIC SIGN	DUGARD ROAD	CLEETHORPES	528881.59	409067.42			63217			3 Watts			
Y	3	TRAFFIC SIGN	DUGARD ROAD	CLEETHORPES	528878.96	409066.19			63218			49 Watts			
Y	4	TRAFFIC SIGN	DUGARD ROAD	CLEETHORPES	528878.12	409065.66			63219			3 Watts			
Y	1	TRAFFIC SIGN	ELLISTON STREET	CLEETHORPES	529448.39	409516			63220			3 Watts			
Y	2	TRAFFIC SIGN	ELLISTON STREET	CLEETHORPES	529429.74	409494			63221			3 Watts			
Y	1	TRAFFIC SIGN	FREESTON STREET	CLEETHORPES	528820.1	409569			63223			4 Watts			
Y	2	TRAFFIC SIGN	FREESTON STREET	CLEETHORPES	528828.73	409552			63224			4 Watts			
Y	1	TRAFFIC SIGN	FULLER STREET	CLEETHORPES	529546.07	409734			63225			11 Watts			
Y	1A	TRAFFIC SIGN	FULLER STREET	CLEETHORPES	529546.07	409734			63226						
Y	2	TRAFFIC SIGN	FULLER STREET	CLEETHORPES	529556.47	409729			63227			3 Watts			
Y	2A	TRAFFIC SIGN	FULLER STREET	CLEETHORPES	529556.47	409729			63228						
Y	1	TRAFFIC SIGN	HARRINGTON STREET	CLEETHORPES	528871.53	410264			63238			11 Watts			
Y	10	TRAFFIC SIGN	HARRINGTON STREET	CLEETHORPES	529600.03	409995.25			63250			6 Watts			
Y	10A	TRAFFIC SIGN	HARRINGTON STREET	CLEETHORPES	529600.03	409995.25			63251						
Y	11	TRAFFIC SIGN	HARRINGTON STREET	CLEETHORPES	529662.48	409959.84			63252			7 Watts			
Y	12	TRAFFIC SIGN	HARRINGTON STREET	CLEETHORPES	529724.87	409922.15			63253			7 Watts			
Y	2	TRAFFIC SIGN	HARRINGTON STREET	CLEETHORPES	528878.45	410264.31			63239			11 Watts			
Y	3	TRAFFIC SIGN	HARRINGTON STREET	CLEETHORPES	528879.68	410265			63240			7 Watts			
Y	4	TRAFFIC SIGN	HARRINGTON STREET	CLEETHORPES	528885.95	410256			63241			4 Watts			
Y	5	TRAFFIC SIGN	HARRINGTON STREET	CLEETHORPES	529052.47	410211			63242			7 Watts			
Y	6	TRAFFIC SIGN	HARRINGTON STREET	CLEETHORPES	529049.92	410204			63243			7 Watts			
Y	7	TRAFFIC SIGN	HARRINGTON STREET	CLEETHORPES	529470.23	410060.11			63244			7 Watts			
Y	8	TRAFFIC SIGN	HARRINGTON STREET	CLEETHORPES	529473.71	410050.14			63247			7 Watts			
Y	9	TRAFFIC SIGN	HARRINGTON STREET	CLEETHORPES	529600.54	409995			63248			4 Watts			
Y	9A	TRAFFIC SIGN	HARRINGTON STREET	CLEETHORPES	529600.54	409995			63249						
Y	1	TRAFFIC SIGN	LESTRANGE STREET	CLEETHORPES	529576.6	409416			63375			6 Watts			
Y	2	TRAFFIC SIGN	LESTRANGE STREET	CLEETHORPES	529554.19	409408.21			63376			3 Watts			
Y	3	TRAFFIC SIGN	LESTRANGE STREET	CLEETHORPES	529525.75	409387			63377			7 Watts			
Y	1	TRAFFIC SIGN	LOVETT STREET	CLEETHORPES	529270.97	410130			63378			3 Watts			
Y	2	TRAFFIC SIGN	LOVETT STREET	CLEETHORPES	529260.83	410134			63379			3 Watts			
Y	3	TRAFFIC SIGN	LOVETT STREET	CLEETHORPES	529165.02	409913			63380			4 Watts			
Y	4	TRAFFIC SIGN	LOVETT STREET	CLEETHORPES	529153.32	409918			63381			3 Watts			
Y	5	TRAFFIC SIGN	LOVETT STREET	CLEETHORPES	529059.4	409704			63382			11 Watts			
Y	6	TRAFFIC SIGN	LOVETT STREET	CLEETHORPES	529044.51	409693			63383			11 Watts			
Y	1	TRAFFIC SIGN	MANCHESTER STREET	CLEETHORPES	529704.21	409888			63384			4 Watts			
Y	1A	TRAFFIC SIGN	MANCHESTER STREET	CLEETHORPES	529704.21	409888			63385						
Y	2	TRAFFIC SIGN	MANCHESTER STREET	CLEETHORPES	529713.9	409886			63386			11 Watts			
Y	2A	TRAFFIC SIGN	MANCHESTER STREET	CLEETHORPES	529713.9	409886			63387						
Y	1	TRAFFIC SIGN	MONTAGUE STREET	CLEETHORPES	528820.11	410140			63415			7 Watts			
Y	2	TRAFFIC SIGN	MONTAGUE STREET	CLEETHORPES	528829.92	410147			63416			4 Watts			
Y	3	TRAFFIC SIGN	MONTAGUE STREET	CLEETHORPES	528987.77	410071			63417			11 Watts			
Y	4	TRAFFIC SIGN	MONTAGUE STREET	CLEETHORPES	528977.3	410065			63418			3 Watts			
Y	1	TRAFFIC SIGN	NEVILLE STREET	CLEETHORPES	529481.53	409767			63419			3 Watts			
Y	1A	TRAFFIC SIGN	NEVILLE STREET	CLEETHORPES	529481.53	409767			63420						
Y	1B	TRAFFIC SIGN	NEVILLE STREET	CLEETHORPES	529481.53	409767			63421						
Y	2	TRAFFIC SIGN	NEVILLE STREET	CLEETHORPES	529491.22	409761			63422			3 Watts			
Y	2A	TRAFFIC SIGN	NEVILLE STREET	CLEETHORPES	529491.22	409761			63423						
Y	2B	TRAFFIC SIGN	NEVILLE STREET	CLEETHORPES	529491.22	409761			63424						
Y	3	TRAFFIC SIGN	NEVILLE STREET	CLEETHORPES	529592	409992			63425			4 Watts			
Y	4	TRAFFIC SIGN	NEVILLE STREET	CLEETHORPES	529602	409986			63426			4 Watts			
Y	1	TRAFFIC SIGN	PARK VIEW	CLEETHORPES	529109.33	409661			63464			3 Watts			
Y	1	TRAFFIC SIGN	PHELPS STREET	CLEETHORPES	528963.1	410015			63465			7 Watts			
Y	2	TRAFFIC SIGN	PHELPS STREET	CLEETHORPES	528970.14	410012			63466			7 Watts			
Y	3	TRAFFIC SIGN	PHELPS STREET	CLEETHORPES	529052.62	410199			63467			4 Watts			
Y	4	TRAFFIC SIGN	PHELPS STREET	CLEETHORPES	529060.99	410197			63468			7 Watts			
Y	1	TRAFFIC SIGN	TAYLOR STREET	CLEETHORPES	528852.18	410204			63525			7 Watts			
Y	2	TRAFFIC SIGN	TAYLOR STREET	CLEETHORPES	528847.29	410195			63526			7 Watts			
Y	3	TRAFFIC SIGN	TAYLOR STREET	CLEETHORPES	529013.83	410124			63527			7 Watts			
Y	4	TRAFFIC SIGN	TAYLOR STREET	CLEETHORPES	529009.69	410117			63528			7 Watts			
Y	1	TRAFFIC SIGN	TIVERTON STREET	CLEETHORPES	529338.77	410105			63559			7 Watts			
Y	2	TRAFFIC SIGN	TIVERTON STREET	CLEETHORPES	529328.37	410109			63560			7 Watts			
Y	3	TRAFFIC SIGN	TIVERTON STREET	CLEETHORPES	529219.8	409887			63562			7 Watts			
Y	4	TRAFFIC SIGN	TIVERTON STREET	CLEETHORPES	529227.48	409883			63561			7 Watts			
Y	5	TRAFFIC SIGN	TIVERTON STREET	CLEETHORPES	529123.95	409671			63563			4 Watts			
Y	1N	TRAFFIC SIGN	PARK STREET	GRIMSBY					68023						
Y	2	TRAFFIC SIGN	PARK STREET	GRIMSBY	528695.22	409884.01			66740			4 Watts			
Y	3	TRAFFIC SIGN	PARK STREET	GRIMSBY	528688.59	409883.34			65353			49 Watts			
Y	4N	TRAFFIC SIGN	PARK STREET	GRIMSBY					68024						
Y	5	TRAFFIC SIGN	PARK STREET	GRIMSBY	528678.56	409864.31			64598			4 Watts			
Y	6N	TRAFFIC SIGN	PARK STREET	GRIMSBY	528685.71	409863.91			64599						
Y	7	TRAFFIC SIGN	PARK STREET	GRIMSBY	528685.84	409861.83			65354			49 Watts			
Y	8	TRAFFIC SIGN	PARK STREET	GRIMSBY	528686.17	409853.05			64600			6 Watts			
Y	9N	TRAFFIC SIGN	PARK STREET	GRIMSBY	528690.03	409454			64602						
Y	1	TRAFFIC SIGN	QUEEN MARY AVENUE	CLEETHORPES	528701.52	409437			63482			6 Watts			
Y	2	TRAFFIC SIGN	QUEEN MARY AVENUE	CLEETHORPES					67098			3 Watts			
Y	2A	TRAFFIC SIGN	QUEEN MARY AVENUE	CLEETHORPES					67099						
Y	3	TRAFFIC SIGN	QUEEN MARY AVENUE	CLEETHORPES					67100			4,700 Watts			
Y	4	TRAFFIC SIGN	QUEEN MARY AVENUE	CLEETHORPES					67101			6 Watts			
Y	4A	TRAFFIC SIGN	QUEEN MARY AVENUE	CLEETHORPES					67104						
Y	5	TRAFFIC SIGN	QUEEN MARY AVENUE	CLEETHORPES					67107			4,700 Watts			
Y	6	TRAFFIC SIGN	QUEEN MARY AVENUE	CLEETHORPES					67102			3 Watts			
Y	6A	TRAFFIC SIGN	QUEEN MARY AVENUE	CLEETHORPES					67105						
Y	7	TRAFFIC SIGN	QUEEN MARY AVENUE	CLEETHORPES					67108			4,700 Watts			
Y	8	TRAFFIC SIGN	QUEEN MARY AVENUE	CLEETHORPES					67103			3 Watts			
Y	8A	TRAFFIC SIGN	QUEEN MARY AVENUE	CLEETHORPES					67106						
Y	9	TRAFFIC SIGN	QUEEN MARY AVENUE	CLEETHORPES					67109			4,700 Watts			
Y	1N	TRAFFIC SIGN	GRIMSBY ROAD	CLEETHORPES	528800.56	410080			63231						
Y	2	TRAFFIC SIGN	GRIMSBY ROAD	CLEETHORPES	528809.97	410084			63232			3 Watts			
Y	3N	TRAFFIC SIGN	GRIMSBY ROAD	CLEETHORPES	528807.37	410076			63233						
Y	4N	TRAFFIC SIGN	GRIMSBY ROAD	CLEETHORPES	530197.43	408964.91			63234						
Y	5	TRAFFIC SIGN	GRIMSBY ROAD	CLEETHORPES	530203.24	408969.97			63591			3 Watts			
Y	6	TRAFFIC SIGN	GRIMSBY ROAD	CLEETHORPES	530197.86	408964.52			63235			3 Watts			
Y	7	TRAFFIC SIGN	GRIMSBY ROAD	CLEETHORPES	530199.97	408961.68			63592			3 Watts			
Y	8	TRAFFIC SIGN	GRIMSBY ROAD	CLEETHORPES	530193.97	408957.4			63593			3 Watts			
Y	9N	TRAFFIC SIGN	GRIMSBY ROAD	CLEETHORPES	530206.74	408948.01			63236			4 Watts			

Y	1	TRAFFIC SIGN	NORTH PROMENADE	CLEETHORPES	530718.35	408981			63428			11 Watts			
Y	1A	TRAFFIC SIGN	NORTH PROMENADE	CLEETHORPES	530718.35	408981			63429						
Y	2	TRAFFIC SIGN	NORTH PROMENADE	CLEETHORPES	530719.09	408983.59			69093			3 Watts			
Y	3	TRAFFIC SIGN	NORTH PROMENADE	CLEETHORPES	530719.09	408983.59			69095			70 Watts			
Y	4	TRAFFIC SIGN	NORTH PROMENADE	CLEETHORPES	530724.13	408994.17			69094			3 Watts			
Y	5	TRAFFIC SIGN	NORTH PROMENADE	CLEETHORPES	530724.13	408994.17			69096			70 Watts			
Y	6	TRAFFIC SIGN	NORTH PROMENADE	CLEETHORPES	530720.32	409000.32			69097			3 Watts			
Y	7	TRAFFIC SIGN	NORTH PROMENADE	CLEETHORPES	530262.75	409626.71			63430			11 Watts			
Y	8N	TRAFFIC SIGN	NORTH PROMENADE	CLEETHORPES	530268.78	409632.71			63431						
Y	1	TRAFFIC SIGN	POPLAR ROAD	CLEETHORPES	530180.13	409007.84			63469			11 Watts			
Y	1A	TRAFFIC SIGN	POPLAR ROAD	CLEETHORPES					69042						
Y	2	TRAFFIC SIGN	POPLAR ROAD	CLEETHORPES	530187.94	408998.02			63470			11 Watts			
Y	2A	TRAFFIC SIGN	POPLAR ROAD	CLEETHORPES					69043						
Y	3	TRAFFIC SIGN	POPLAR ROAD	CLEETHORPES	530180.13	409007.84			63471			11 Watts			
Y	4	TRAFFIC SIGN	POPLAR ROAD	CLEETHORPES	530187.94	408998.02			63472			11 Watts			
Y	5	TRAFFIC SIGN	POPLAR ROAD	CLEETHORPES	530396.45	409178.99			63473			11 Watts			
Y	6	TRAFFIC SIGN	POPLAR ROAD	CLEETHORPES	530404.38	409172.66			63474			11 Watts			
Y	7	TRAFFIC SIGN	POPLAR ROAD	CLEETHORPES	530396.45	409178.99			63475			11 Watts			
Y	8	TRAFFIC SIGN	POPLAR ROAD	CLEETHORPES	530404.38	409172.66			63476			11 Watts			
Y	9	TRAFFIC SIGN	POPLAR ROAD	CLEETHORPES	530465.68	409231.71			63477			11 Watts			
Y	1	TRAFFIC SIGN	ROBSON ROAD	CLEETHORPES					67701			7 Watts			
Y	1	TRAFFIC SIGN	HIGH STREET	CLEETHORPES	530576.26	408958.19			68065			3 Watts			
Y	10	TRAFFIC SIGN	HIGH STREET	CLEETHORPES	530399.43	408880.71			68132			3 Watts			
Y	2	TRAFFIC SIGN	HIGH STREET	CLEETHORPES	530545.31	408932.07			68074			3 Watts			
Y	3N	TRAFFIC SIGN	HIGH STREET	CLEETHORPES	530536.27	408928.02			68075			3 Watts			
Y	4	TRAFFIC SIGN	HIGH STREET	CLEETHORPES	530482.23	408909.72			68076			3 Watts			
Y	5N	TRAFFIC SIGN	HIGH STREET	CLEETHORPES	530473.75	408906.59			68077						
Y	6	TRAFFIC SIGN	HIGH STREET	CLEETHORPES	530472.19	408900.18			68066			3 Watts			
Y	7	TRAFFIC SIGN	HIGH STREET	CLEETHORPES	530449.83	408902.24			68067			3 Watts			
Y	8	TRAFFIC SIGN	HIGH STREET	CLEETHORPES	530443.42	408891.99			68078			3 Watts			
Y	9	TRAFFIC SIGN	HIGH STREET	CLEETHORPES	530416.08	408878.25			68079			3 Watts			
Y	1	TRAFFIC SIGN	PRINCES ROAD	CLEETHORPES	530242.47	408938			63478			11 Watts			
Y	2	TRAFFIC SIGN	PRINCES ROAD	CLEETHORPES	530244.13	408939.94			63479			11 Watts			
Y	3	TRAFFIC SIGN	PRINCES ROAD	CLEETHORPES	530469.5	409109			63480			3 Watts			
Y	4	TRAFFIC SIGN	PRINCES ROAD	CLEETHORPES	530490.9	409111			63481			3 Watts			
Y	1N	TRAFFIC SIGN	ISAACS HILL	CLEETHORPES	530249.8	408921			63308			3 Watts			
Y	2	TRAFFIC SIGN	ISAACS HILL	CLEETHORPES	530244.08	408925			63309			3 Watts			
Y	3N	TRAFFIC SIGN	ISAACS HILL	CLEETHORPES	530233.73	408924			63310						
Y	4N	TRAFFIC SIGN	ISAACS HILL	CLEETHORPES	530237.49	408928			63311						
Y	5N	TRAFFIC SIGN	ISAACS HILL	CLEETHORPES					67788			3 Watts			
Y	1	TRAFFIC SIGN	STATION ROAD	CLEETHORPES					68080			3 Watts			
Y	2	TRAFFIC SIGN	STATION ROAD	CLEETHORPES					68081			3 Watts			
Y	3	TRAFFIC SIGN	STATION ROAD	CLEETHORPES					68072			3 Watts			
Y	4	TRAFFIC SIGN	STATION ROAD	CLEETHORPES	530548.82	409105.19			63521			3 Watts			
Y	5	TRAFFIC SIGN	STATION ROAD	CLEETHORPES	530533.82	409144.62			63522			3 Watts			
Y	6	TRAFFIC SIGN	STATION ROAD	CLEETHORPES	530536.51	409152.94			63523			3 Watts			
Y	7	TRAFFIC SIGN	STATION ROAD	CLEETHORPES	530515.75	409185			63524			3 Watts			
Y	1	TRAFFIC SIGN	GRANT STREET	CLEETHORPES	530430.26	409172			63230			4 Watts			
Y	1	TRAFFIC SIGN	BEACON AVENUE	CLEETHORPES	529858.56	408663			63078			7 Watts			
Y	1	TRAFFIC SIGN	BRIAN AVENUE	CLEETHORPES	529351.44	407360			63135			6 Watts			
Y	1N	TRAFFIC SIGN	CURZON AVENUE	CLEETHORPES					68895						
Y	2N	TRAFFIC SIGN	CURZON AVENUE	CLEETHORPES					68836						
Y	10N	TRAFFIC SIGN	DAVENPORT DRIVE	CLEETHORPES	529154.73	407778.73			63207						
Y	1N	TRAFFIC SIGN	DAVENPORT DRIVE	CLEETHORPES	529484.57	408488			63198						
Y	2N	TRAFFIC SIGN	DAVENPORT DRIVE	CLEETHORPES	529486.8	408485			63199						
Y	3	TRAFFIC SIGN	DAVENPORT DRIVE	CLEETHORPES	529485.28	408476			63200			4 Watts			
Y	4N	TRAFFIC SIGN	DAVENPORT DRIVE	CLEETHORPES	529460.5	408053.58			63201						
Y	5N	TRAFFIC SIGN	DAVENPORT DRIVE	CLEETHORPES	529455.95	408049			63202						
Y	6N	TRAFFIC SIGN	DAVENPORT DRIVE	CLEETHORPES					68896						
Y	7N	TRAFFIC SIGN	DAVENPORT DRIVE	CLEETHORPES					68837						
Y	8	TRAFFIC SIGN	DAVENPORT DRIVE	CLEETHORPES	529162.78	407779			63205			3 Watts			
Y	9N	TRAFFIC SIGN	DAVENPORT DRIVE	CLEETHORPES	529159.61	407783.11			63206						
Y	10N	TRAFFIC SIGN	CLEE ROAD	CLEETHORPES	529807.61	408654.77			63164			4 Watts			
Y	11	TRAFFIC SIGN	CLEE ROAD	CLEETHORPES	529806.94	408654.47			63587			11 Watts			
Y	12N	TRAFFIC SIGN	CLEE ROAD	CLEETHORPES	529802.01	408652.01			63165			4 Watts			
Y	13	TRAFFIC SIGN	CLEE ROAD	CLEETHORPES	529492	408500			63166			11 Watts			
Y	14	TRAFFIC SIGN	CLEE ROAD	CLEETHORPES	529490	408499			63167			11 Watts			
Y	15	TRAFFIC SIGN	CLEE ROAD	CLEETHORPES	529310.01	408387.71			63168			3 Watts			
Y	16	TRAFFIC SIGN	CLEE ROAD	CLEETHORPES	529314.48	408385.01			63588			49 Watts			
Y	17	TRAFFIC SIGN	CLEE ROAD	CLEETHORPES	529313.85	408384.52			63169			3 Watts			
Y	18N	TRAFFIC SIGN	CLEE ROAD	CLEETHORPES	529223.38	408313.48			63170						
Y	19	TRAFFIC SIGN	CLEE ROAD	CLEETHORPES	529222.94	408313.07			63589			11 Watts			
Y	1N	TRAFFIC SIGN	CLEE ROAD	CLEETHORPES	530203.59	408917.03			63162			4 Watts			
Y	2	TRAFFIC SIGN	CLEE ROAD	CLEETHORPES	530191.71	408910.12			63583			3 Watts			
Y	20N	TRAFFIC SIGN	CLEE ROAD	CLEETHORPES	529219.42	408310.37			63171			4 Watts			
Y	21N	TRAFFIC SIGN	CLEE ROAD	CLEETHORPES					67789			3 Watts			
Y	22	TRAFFIC SIGN	CLEE ROAD	CLEETHORPES	529142.35	408249.53			63590			11 Watts			
Y	23N	TRAFFIC SIGN	CLEE ROAD	CLEETHORPES	529053.44	408179.63			63173			4 Watts			
Y	24	TRAFFIC SIGN	CLEE ROAD	CLEETHORPES	529049.88	408176.76			63174			49 Watts			
Y	25	TRAFFIC SIGN	CLEE ROAD	CLEETHORPES	529048.95	408176.07			63175			4 Watts			
Y	26N	TRAFFIC SIGN	CLEE ROAD	CLEETHORPES	528957.68	408106			63176						
Y	27N	TRAFFIC SIGN	CLEE ROAD	CLEETHORPES	528953.14	408105			63177						
Y	3	TRAFFIC SIGN	CLEE ROAD	CLEETHORPES	530195.34	408905			63584			3 Watts			
Y	4	TRAFFIC SIGN	CLEE ROAD	CLEETHORPES	530189.32	408908.14			63585			3 Watts			
Y	5	TRAFFIC SIGN	CLEE ROAD	CLEETHORPES	530184.94	408914			63586			3 Watts			
Y	6N	TRAFFIC SIGN	CLEE ROAD	CLEETHORPES	530188.28	408907.4			63163			4 Watts			
Y	7N	TRAFFIC SIGN	CLEE ROAD	CLEETHORPES	529878.87	408704.61			69091						
Y	8	TRAFFIC SIGN	CLEE ROAD	CLEETHORPES	529876.01	408701.45			69090			49 Watts			
Y	9N	TRAFFIC SIGN	CLEE ROAD	CLEETHORPES	529874.65	408700.41			69092						
Y	1	TRAFFIC SIGN	CROSS STREET	CLEETHORPES	530491.2	408842.65			68104			3 Watts			
Y	2	TRAFFIC SIGN	CROSS STREET	CLEETHORPES	530498.53	408846.49			68105			3 Watts			
Y	3	TRAFFIC SIGN	CROSS STREET	CLEETHORPES	530465.14	408892.2			68136			3 Watts			
Y	4	TRAFFIC SIGN	CROSS STREET	CLEETHORPES	530469.77	408894.84			68137			3 Watts			
Y	5	TRAFFIC SIGN	CROSS STREET	CLEETHORPES	530462.29	408913.99			68073			3 Watts			
Y	1	TRAFFIC SIGN	ALBERT ROAD	CLEETHORPES	530757.75	408774.06			68102			3 Watts			
Y	2	TRAFFIC SIGN	ALBERT ROAD	CLEETHORPES	530752.33	408780.77			68103			3 Watts			
Y	3	TRAFFIC SIGN	ALBERT ROAD	CLEETHORPES	530630.23	408687.27			68143			3 Watts			
Y	4	TRAFFIC SIGN	ALBERT ROAD	CLEETHORPES	530573.43	408652.26			68141			3 Watts			
Y	5	TRAFFIC SIGN	ALBERT ROAD	CLEETHORPES	530567.61	408661.53			68142			3 Watts			
Y	1	TRAFFIC SIGN	BENTLEY STREET	CLEETHORPES	529990.36	408504			63081			6 Watts			
Y	2	TRAFFIC SIGN	BENTLEY STREET	CLEETHORPES	529972.83	408498			63082						
Y	3N	TRAFFIC SIGN	BENTLEY STREET	CLEETHORPES					68835						
Y	4	TRAFFIC SIGN	BENTLEY STREET	CLEETHORPES	529965.02	408501			63084			4 Watts			
Y	1	TRAFFIC SIGN	BOWLING LANE	CLEETHORPES	530316.38	408539			63091			3 Watts			
Y	10	TRAFFIC SIGN	BOWLING LANE	CLEETHORPES	530472.53	408648			63109			3 Watts			
Y	11	TRAFFIC SIGN	BOWLING LANE	CLEETHORPES	530480.52	408643.84			63110			4 Watts			
Y	12	TRAFFIC SIGN	BOWLING LANE	CLEETHORPES	530532.81	408686			63111			4 Watts			
Y	12A	TRAFFIC SIGN	BOWLING LANE	CLEETHORPES	530532.81	408686			63112						
Y	13	TRAFFIC SIGN	BOWLING LANE	CLEETHORPES	530536.07	408681			63113			4 Watts			
Y	13A	TRAFFIC SIGN	BOWLING LANE	CLEETHORPES	530536.07	408681			63114						

Y	1A	TRAFFIC SIGN	BOWLING LANE	CLEETHORPES	530316.38	408539			63092						
Y	1B	TRAFFIC SIGN	BOWLING LANE	CLEETHORPES	530316.38	408539			63093						
Y	2	TRAFFIC SIGN	BOWLING LANE	CLEETHORPES	530318.75	408535			63094			11 Watts			
Y	2A	TRAFFIC SIGN	BOWLING LANE	CLEETHORPES	530318.75	408535			63095						
Y	2B	TRAFFIC SIGN	BOWLING LANE	CLEETHORPES	530318.75	408535			63096						
Y	3	TRAFFIC SIGN	BOWLING LANE	CLEETHORPES	530360.19	408571			63097			4 Watts			
Y	4	TRAFFIC SIGN	BOWLING LANE	CLEETHORPES	530371.04	408579			63098			11 Watts			
Y	4A	TRAFFIC SIGN	BOWLING LANE	CLEETHORPES	530371.04	408579			63099						
Y	4B	TRAFFIC SIGN	BOWLING LANE	CLEETHORPES	530371.04	408579			63100						
Y	5	TRAFFIC SIGN	BOWLING LANE	CLEETHORPES	530374.3	408575			63101			11 Watts			
Y	5A	TRAFFIC SIGN	BOWLING LANE	CLEETHORPES	530374.3	408575			63102						
Y	5B	TRAFFIC SIGN	BOWLING LANE	CLEETHORPES	530374.3	408575			63103						
Y	6	TRAFFIC SIGN	BOWLING LANE	CLEETHORPES	530412.81	408608			63104			4 Watts			
Y	7	TRAFFIC SIGN	BOWLING LANE	CLEETHORPES	530424.02	408615			63105			11 Watts			
Y	8	TRAFFIC SIGN	BOWLING LANE	CLEETHORPES	530425.72	408611			63106			6 Watts			
Y	9	TRAFFIC SIGN	BOWLING LANE	CLEETHORPES	530468.34	408641			63107			11 Watts			
Y	9A	TRAFFIC SIGN	BOWLING LANE	CLEETHORPES	530468.34	408641			63108						
Y	1	TRAFFIC SIGN	CENTRAL PROMENADE	CLEETHORPES	530751.74	408949.07			63146			3 Watts			
Y	2	TRAFFIC SIGN	CENTRAL PROMENADE	CLEETHORPES	530751.74	408949.07			69294			61 Watts			
Y	3	TRAFFIC SIGN	CENTRAL PROMENADE	CLEETHORPES	530738.07	408949.05			63147			3 Watts			
Y	4	TRAFFIC SIGN	CENTRAL PROMENADE	CLEETHORPES					69295			61 Watts			
Y	5	TRAFFIC SIGN	CENTRAL PROMENADE	CLEETHORPES	531064.42	408484			63148						
Y	6	TRAFFIC SIGN	CENTRAL PROMENADE	CLEETHORPES	531060.64	408481			63149						
Y	1	TRAFFIC SIGN	COSGROVE STREET	CLEETHORPES	530611.69	408710			63181			6 Watts			
Y	2	TRAFFIC SIGN	COSGROVE STREET	CLEETHORPES	530626.96	408697			63182			6 Watts			
Y	3	TRAFFIC SIGN	COSGROVE STREET	CLEETHORPES	530623.34	408695			63183			6 Watts			
Y	1	TRAFFIC SIGN	DE LACY LANE	CLEETHORPES	530554.52	408680			63212			11 Watts			
Y	2	TRAFFIC SIGN	DE LACY LANE	CLEETHORPES	530556.04	408677			63213			7 Watts			
Y	3	TRAFFIC SIGN	DE LACY LANE	CLEETHORPES	530603.95	408710			63214			6 Watts			
Y	4	TRAFFIC SIGN	DE LACY LANE	CLEETHORPES	530608.92	408709			63215			6 Watts			
Y	1	TRAFFIC SIGN	FAIRVIEW AVENUE	CLEETHORPES	530214.48	408657			63222			6 Watts			
Y	1	TRAFFIC SIGN	KNOLL STREET	CLEETHORPES	530851.3	408620			63374			4 Watts			
Y	1	TRAFFIC SIGN	MILL PLACE	CLEETHORPES	530587.71	408861			63403			3 Watts			
Y	2	TRAFFIC SIGN	MILL PLACE	CLEETHORPES	530584.09	408857			63404			3 Watts			
Y	3	TRAFFIC SIGN	MILL PLACE	CLEETHORPES	530611.96	408815			63405			4 Watts			
Y	4	TRAFFIC SIGN	MILL PLACE	CLEETHORPES	530619.27	408776			63406			4 Watts			
Y	5	TRAFFIC SIGN	MILL PLACE	CLEETHORPES	530687.78	408775.84			63407			11 Watts			
Y	6	TRAFFIC SIGN	MILL PLACE	CLEETHORPES	530679.75	408776			63408			4 Watts			
Y	1	TRAFFIC SIGN	MILL ROAD	CLEETHORPES	530609.74	408570			63409			4 Watts			
Y	2	TRAFFIC SIGN	MILL ROAD	CLEETHORPES	530370.48	408431			63410			6 Watts			
Y	3	TRAFFIC SIGN	MILL ROAD	CLEETHORPES	530367.14	408438			63411			6 Watts			
Y	4	TRAFFIC SIGN	MILL ROAD	CLEETHORPES	530122.36	408296			63412			4 Watts			
Y	5	TRAFFIC SIGN	MILL ROAD	CLEETHORPES	530117.39	408304			63413			4 Watts			
Y	6	TRAFFIC SIGN	MILL ROAD	CLEETHORPES	530122.36	408296			63414			4 Watts			
Y	1	TRAFFIC SIGN	OOLE ROAD	CLEETHORPES	530783.21	408651.44			63450			6 Watts			
Y	2	TRAFFIC SIGN	OOLE ROAD	CLEETHORPES	530781.09	408655.83			63451			6 Watts			
Y	3	TRAFFIC SIGN	OOLE ROAD	CLEETHORPES	530704	408594			63452			11 Watts			
Y	4	TRAFFIC SIGN	OOLE ROAD	CLEETHORPES	530700	408599			63453			4 Watts			
Y	1N	TRAFFIC SIGN	SEA ROAD	CLEETHORPES	530666.65	408922.93			69034			3 Watts			
Y	2N	TRAFFIC SIGN	SEA ROAD	CLEETHORPES	530669.82	408924.19			69035			3 Watts			
Y	3	TRAFFIC SIGN	SEA ROAD	CLEETHORPES	530676.94	408911.22			69089			3 Watts			
Y	1	TRAFFIC SIGN	ST PETERS AVENUE	CLEETHORPES	530426.14	408853			63512			7 Watts			
Y	10	TRAFFIC SIGN	ST PETERS AVENUE	CLEETHORPES	530608.94	408601			63603			70 Watts			
Y	11	TRAFFIC SIGN	ST PETERS AVENUE	CLEETHORPES	530601.49	408592			63604			3 Watts			
Y	12	TRAFFIC SIGN	ST PETERS AVENUE	CLEETHORPES	530601.49	408592			63605			70 Watts			
Y	13	TRAFFIC SIGN	ST PETERS AVENUE	CLEETHORPES	530622.53	408585			63516			11 Watts			
Y	14	TRAFFIC SIGN	ST PETERS AVENUE	CLEETHORPES	530624.07	408561			63517			4 Watts			
Y	15	TRAFFIC SIGN	ST PETERS AVENUE	CLEETHORPES	530771.12	408381			63518			6 Watts			
Y	2	TRAFFIC SIGN	ST PETERS AVENUE	CLEETHORPES	530418.86	408847			63513			7 Watts			
Y	3	TRAFFIC SIGN	ST PETERS AVENUE	CLEETHORPES	530470.4	408791			63598			1,610 Watts			
Y	4	TRAFFIC SIGN	ST PETERS AVENUE	CLEETHORPES	530465.9	408781			63599			1,610 Watts			
Y	5	TRAFFIC SIGN	ST PETERS AVENUE	CLEETHORPES	530523.83	408712			63600			1,610 Watts			
Y	6	TRAFFIC SIGN	ST PETERS AVENUE	CLEETHORPES	530518.98	408707			63601			1,610 Watts			
Y	7	TRAFFIC SIGN	ST PETERS AVENUE	CLEETHORPES	530532.45	408702			63514			11 Watts			
Y	8	TRAFFIC SIGN	ST PETERS AVENUE	CLEETHORPES	530528.67	408693			63515			4 Watts			
Y	9	TRAFFIC SIGN	ST PETERS AVENUE	CLEETHORPES	530608.94	408601			63602			3 Watts			
Y	1	TRAFFIC SIGN	WOLLASTON ROAD	CLEETHORPES	530046.87	408810			63573			4 Watts			
Y	2	TRAFFIC SIGN	WOLLASTON ROAD	CLEETHORPES	530038.48	408804			63574			11 Watts			
Y	3	TRAFFIC SIGN	WOLLASTON ROAD	CLEETHORPES	530091.32	408737			63575			4 Watts			
Y	4	TRAFFIC SIGN	WOLLASTON ROAD	CLEETHORPES	530097.94	408742			63576			11 Watts			
Y	5	TRAFFIC SIGN	WOLLASTON ROAD	CLEETHORPES	530098.17	408726			63577			6 Watts			
Y	5A	TRAFFIC SIGN	WOLLASTON ROAD	CLEETHORPES	530098.17	408726			63578						
Y	6	TRAFFIC SIGN	WOLLASTON ROAD	CLEETHORPES	530157.63	408648			63579			11 Watts			
Y	7	TRAFFIC SIGN	WOLLASTON ROAD	CLEETHORPES	530164.37	408654			63580			4 Watts			
Y	1	TRAFFIC SIGN	ALEXANDRA ROAD	CLEETHORPES	530927.24	408631.57			68068			6 Watts			
Y	10	TRAFFIC SIGN	ALEXANDRA ROAD	CLEETHORPES	530741.49	408807.47			68094			3 Watts			
Y	11	TRAFFIC SIGN	ALEXANDRA ROAD	CLEETHORPES	530738.33	408811.09			68095			3 Watts			
Y	12	TRAFFIC SIGN	ALEXANDRA ROAD	CLEETHORPES	530637.94	408923.42			68096			3 Watts			
Y	13	TRAFFIC SIGN	ALEXANDRA ROAD	CLEETHORPES	530626.45	408926.15			63066			3 Watts			
Y	14	TRAFFIC SIGN	ALEXANDRA ROAD	CLEETHORPES	530626.45	408926.15			63067			70 Watts			
Y	15	TRAFFIC SIGN	ALEXANDRA ROAD	CLEETHORPES	530629.66	408928.82			63068			3 Watts			
Y	16	TRAFFIC SIGN	ALEXANDRA ROAD	CLEETHORPES	530627.42	408934.26			68070			3 Watts			
Y	17	TRAFFIC SIGN	ALEXANDRA ROAD	CLEETHORPES	530632.92	408939.07			63069			70 Watts			
Y	18	TRAFFIC SIGN	ALEXANDRA ROAD	CLEETHORPES	530632.92	408939.07			63070			3 Watts			
Y	19	TRAFFIC SIGN	ALEXANDRA ROAD	CLEETHORPES	530614.98	408945.64			68157			3 Watts			
Y	2	TRAFFIC SIGN	ALEXANDRA ROAD	CLEETHORPES	530921.21	408629.23			68086			3 Watts			
Y	20	TRAFFIC SIGN	ALEXANDRA ROAD	CLEETHORPES	530599.28	408949.06			68071			3 Watts			
Y	3	TRAFFIC SIGN	ALEXANDRA ROAD	CLEETHORPES	530910.32	408631.75			68087			3 Watts			
Y	4	TRAFFIC SIGN	ALEXANDRA ROAD	CLEETHORPES	530889.99	408641.02			68088			3 Watts			
Y	5	TRAFFIC SIGN	ALEXANDRA ROAD	CLEETHORPES	530887.11	408644.26			68089			3 Watts			
Y	6	TRAFFIC SIGN	ALEXANDRA ROAD	CLEETHORPES	530810.8	408729.03			68090			3 Watts			
Y	7	TRAFFIC SIGN	ALEXANDRA ROAD	CLEETHORPES	530806.93	408733.44			68091			3 Watts			
Y	8	TRAFFIC SIGN	ALEXANDRA ROAD	CLEETHORPES	530771.92	408772.93			68092			3 Watts			
Y	9	TRAFFIC SIGN	ALEXANDRA ROAD	CLEETHORPES	530768.18	408777.03			68093			3 Watts			
Y	1	TRAFFIC SIGN	GLEBE ROAD	CLEETHORPES	530472.57	408638			63229			7 Watts			
Y	1	TRAFFIC SIGN	OSBORNE STREET	CLEETHORPES	530542.72	408919.97			68097			3 Watts			
Y	2	TRAFFIC SIGN	OSBORNE STREET	CLEETHORPES	530542.72	408919.97			68144			3 Watts			
Y	3	TRAFFIC SIGN	OSBORNE STREET	CLEETHORPES	530574.15	408871.27			68138			3 Watts			
Y	4	TRAFFIC SIGN	OSBORNE STREET	CLEETHORPES	530567.79	408867.85			68139			3 Watts			
Y	1	TRAFFIC SIGN	MARKET STREET	CLEETHORPES	530645.92	408901.65			68098			3 Watts			
Y	2	TRAFFIC SIGN	MARKET STREET	CLEETHORPES	530639.08	408908.77			68099			3 Watts			
Y	3	TRAFFIC SIGN	MARKET STREET	CLEETHORPES	530619.71	408891.11			68156			3 Watts			
Y	4	TRAFFIC SIGN	MARKET STREET	CLEETHORPES	530623.32	408884.85			68155			3 Watts			
Y	5	TRAFFIC SIGN	MARKET STREET	CLEETHORPES	530559.91	408858.17			68085						
Y	6	TRAFFIC SIGN	MARKET STREET	CLEETHORPES	530560.95	408854.09			67790						
Y	7	TRAFFIC SIGN	MARKET STREET	CLEETHORPES	530555.63	408856.84			67791						
Y	1	TRAFFIC SIGN	BELVOIR ROAD	CLEETHORPES	529712.02	406607			63079			4 Watts			
Y	2	TRAFFIC SIGN	BELVOIR ROAD	CLEETHORPES	529706.67	406616			63080			4 Watts			
Y	1	TRAFFIC SIGN	MIDDLETHORPE ROAD	CLEETHORPES	529926.61	407153			63397			11 Watts			
Y	2	TRAFFIC SIGN	MIDDLETHORPE ROAD	CLEETHORPES	529918.34	407145			63398			11 Watts			

Y	3	TRAFFIC SIGN	MIDDLETHORPE ROAD	CLEETHORPES	529926.61	407153			63399			11 Watts			
Y	4	TRAFFIC SIGN	MIDDLETHORPE ROAD	CLEETHORPES	529918.34	407145			63400			11 Watts			
Y	5	TRAFFIC SIGN	MIDDLETHORPE ROAD	CLEETHORPES	529928.31	407145.79			63401			11 Watts			
Y	6	TRAFFIC SIGN	MIDDLETHORPE ROAD	CLEETHORPES	529931.39	407143			63402			11 Watts			
Y	1N	TRAFFIC SIGN	SANDRINGHAM ROAD	CLEETHORPES					68897						
Y	2N	TRAFFIC SIGN	SANDRINGHAM ROAD	CLEETHORPES					68843						
Y	3	TRAFFIC SIGN	SANDRINGHAM ROAD	CLEETHORPES	530269.42	407956			63496			3 Watts			
Y	3A	TRAFFIC SIGN	SANDRINGHAM ROAD	CLEETHORPES	530269.42	407956			63500						
Y	4	TRAFFIC SIGN	SANDRINGHAM ROAD	CLEETHORPES	530302.63	407981			63497			4 Watts			
Y	5N	TRAFFIC SIGN	SANDRINGHAM ROAD	CLEETHORPES					68842						
Y	6N	TRAFFIC SIGN	SANDRINGHAM ROAD	CLEETHORPES	530310.72	407980			63498						
Y	1	TRAFFIC SIGN	TAYLORS AVENUE	CLEETHORPES	530796.37	408043			63529			4 Watts			
Y	10	TRAFFIC SIGN	TAYLORS AVENUE	CLEETHORPES	530350.62	407569			63538						
Y	11	TRAFFIC SIGN	TAYLORS AVENUE	CLEETHORPES	530346.15	407564			63539						
Y	12N	TRAFFIC SIGN	TAYLORS AVENUE	CLEETHORPES					68197						
Y	13N	TRAFFIC SIGN	TAYLORS AVENUE	CLEETHORPES					68198						
Y	14	TRAFFIC SIGN	TAYLORS AVENUE	CLEETHORPES					66837			8 Watts			
Y	15	TRAFFIC SIGN	TAYLORS AVENUE	CLEETHORPES					66838			8 Watts			
Y	16	TRAFFIC SIGN	TAYLORS AVENUE	CLEETHORPES					66839			8 Watts			
Y	17	TRAFFIC SIGN	TAYLORS AVENUE	CLEETHORPES					66840			8 Watts			
Y	18N	TRAFFIC SIGN	TAYLORS AVENUE	CLEETHORPES					69439						
Y	19N	TRAFFIC SIGN	TAYLORS AVENUE	CLEETHORPES					69440						
Y	20N	TRAFFIC SIGN	TAYLORS AVENUE	CLEETHORPES	529991.15	407192			63546			4 Watts			
Y	21	TRAFFIC SIGN	TAYLORS AVENUE	CLEETHORPES	529989.78	407191			63606			11 Watts			
Y	22N	TRAFFIC SIGN	TAYLORS AVENUE	CLEETHORPES	529986.51	407187			63547						
Y	23	TRAFFIC SIGN	TAYLORS AVENUE	CLEETHORPES	529919.29	407117			63548			3 Watts			
Y	24	TRAFFIC SIGN	TAYLORS AVENUE	CLEETHORPES	529917.91	407116			63607			11 Watts			
Y	25	TRAFFIC SIGN	TAYLORS AVENUE	CLEETHORPES	529915.68	407113			63549			3 Watts			
Y	26N	TRAFFIC SIGN	TAYLORS AVENUE	CLEETHORPES					68199						
Y	27	TRAFFIC SIGN	TAYLORS AVENUE	CLEETHORPES	529844.64	407039			63608			11 Watts			
Y	28N	TRAFFIC SIGN	TAYLORS AVENUE	CLEETHORPES					68200						
Y	29N	TRAFFIC SIGN	TAYLORS AVENUE	CLEETHORPES					68201						
Y	2N	TRAFFIC SIGN	TAYLORS AVENUE	CLEETHORPES					69431						
Y	30	TRAFFIC SIGN	TAYLORS AVENUE	CLEETHORPES	529701.17	406889			63609			11 Watts			
Y	31N	TRAFFIC SIGN	TAYLORS AVENUE	CLEETHORPES					68202						
Y	32	TRAFFIC SIGN	TAYLORS AVENUE	CLEETHORPES	529592	406785			63554			11 Watts			
Y	33	TRAFFIC SIGN	TAYLORS AVENUE	CLEETHORPES	529594.87	406777.78			63555			4 Watts			
Y	34	TRAFFIC SIGN	TAYLORS AVENUE	CLEETHORPES	529588.93	406775.28			63556			4 Watts			
Y	3N	TRAFFIC SIGN	TAYLORS AVENUE	CLEETHORPES					68126						
Y	4N	TRAFFIC SIGN	TAYLORS AVENUE	CLEETHORPES	530523.93	407748.32			63532						
Y	5N	TRAFFIC SIGN	TAYLORS AVENUE	CLEETHORPES	530527.13	407751.87			63533						
Y	6N	TRAFFIC SIGN	TAYLORS AVENUE	CLEETHORPES					68127						
Y	7N	TRAFFIC SIGN	TAYLORS AVENUE	CLEETHORPES					69436						
Y	8N	TRAFFIC SIGN	TAYLORS AVENUE	CLEETHORPES					69437						
Y	9N	TRAFFIC SIGN	TAYLORS AVENUE	CLEETHORPES					69438						
Y	1	TRAFFIC SIGN	BARK STREET	CLEETHORPES	530843.79	408341			63077			6 Watts			
Y	1	TRAFFIC SIGN	CAMBRIDGE STREET	CLEETHORPES	530794.86	408557			63138			11 Watts			
Y	2	TRAFFIC SIGN	CAMBRIDGE STREET	CLEETHORPES	530678.67	408579			63139			4 Watts			
Y	2A	TRAFFIC SIGN	CAMBRIDGE STREET	CLEETHORPES	530678.67	408579			63140						
Y	2B	TRAFFIC SIGN	CAMBRIDGE STREET	CLEETHORPES	530678.67	408579			63141						
Y	3	TRAFFIC SIGN	CAMBRIDGE STREET	CLEETHORPES	530642.03	408582			63142						
Y	4N	TRAFFIC SIGN	CAMBRIDGE STREET	CLEETHORPES	530637.18	408580			63143						
Y	5	TRAFFIC SIGN	CAMBRIDGE STREET	CLEETHORPES	530635.53	408573			63144			11 Watts			
Y	6	TRAFFIC SIGN	CAMBRIDGE STREET	CLEETHORPES	530630.92	408586			63145			4 Watts			
Y	1	TRAFFIC SIGN	HIGHGATE	CLEETHORPES	530784.77	408372			63272			7 Watts			
Y	10	TRAFFIC SIGN	HIGHGATE	CLEETHORPES	530305.53	408024			63280			6 Watts			
Y	11	TRAFFIC SIGN	HIGHGATE	CLEETHORPES	530302.82	408022			63281			11 Watts			
Y	2	TRAFFIC SIGN	HIGHGATE	CLEETHORPES	530762.43	408368			63273			4 Watts			
Y	3	TRAFFIC SIGN	HIGHGATE	CLEETHORPES	530699.2	408296			63274			11 Watts			
Y	4N	TRAFFIC SIGN	HIGHGATE	CLEETHORPES					68838						
Y	5	TRAFFIC SIGN	HIGHGATE	CLEETHORPES	530689.98	408296			63594			11 Watts			
Y	6	TRAFFIC SIGN	HIGHGATE	CLEETHORPES	530686.79	408293			63276			3 Watts			
Y	7	TRAFFIC SIGN	HIGHGATE	CLEETHORPES	530672.27	408289.53			63277			4 Watts			
Y	8	TRAFFIC SIGN	HIGHGATE	CLEETHORPES	530344.42	408046			63278			4 Watts			
Y	8A	TRAFFIC SIGN	HIGHGATE	CLEETHORPES	530344.42	408046			63282						
Y	9	TRAFFIC SIGN	HIGHGATE	CLEETHORPES	530311.56	408022			63279			4 Watts			
Y	1	TRAFFIC SIGN	NICHOLSON STREET	CLEETHORPES	530765.84	408143			63427			3 Watts			
Y	1	TRAFFIC SIGN	NORTH STREET	CLEETHORPES					68961			3 Watts			
Y	2	TRAFFIC SIGN	NORTH STREET	CLEETHORPES					68962			3 Watts			
Y	3	TRAFFIC SIGN	NORTH STREET	CLEETHORPES					68963			3 Watts			
Y	1	TRAFFIC SIGN	SEA VIEW STREET	CLEETHORPES	530920.28	408615.66			68069			3 Watts			
Y	2	TRAFFIC SIGN	SEA VIEW STREET	CLEETHORPES	530912.28	408596.84			68100			3 Watts			
Y	2A	TRAFFIC SIGN	SEA VIEW STREET	CLEETHORPES	530912.28	408596.84			68145						
Y	3	TRAFFIC SIGN	SEA VIEW STREET	CLEETHORPES	530909.07	408603.25			68101			3 Watts			
Y	3A	TRAFFIC SIGN	SEA VIEW STREET	CLEETHORPES	530909.07	408603.25			68146						
Y	4	TRAFFIC SIGN	SEA VIEW STREET	CLEETHORPES	530826.21	408538.39			68140			3 Watts			
Y	1	TRAFFIC SIGN	SHERBURN STREET	CLEETHORPES	530746.92	408141			63511			3 Watts			
Y	1	TRAFFIC SIGN	TRINITY ROAD	CLEETHORPES	530495.09	407740.73			63564			7 Watts			
Y	2	TRAFFIC SIGN	TRINITY ROAD	CLEETHORPES	530348.72	407927			63565			3 Watts			
Y	2A	TRAFFIC SIGN	TRINITY ROAD	CLEETHORPES	530348.72	407927			63566						
Y	3	TRAFFIC SIGN	TRINITY ROAD	CLEETHORPES					68427			4,700 Watts			
Y	4	TRAFFIC SIGN	TRINITY ROAD	CLEETHORPES	530304.02	407998			63610			3 Watts			
Y	5	TRAFFIC SIGN	TRINITY ROAD	CLEETHORPES	530304.02	407998			63611			70 Watts			
Y	6	TRAFFIC SIGN	TRINITY ROAD	CLEETHORPES	530309.35	408008			63612			3 Watts			
Y	7	TRAFFIC SIGN	TRINITY ROAD	CLEETHORPES	530309.35	408008			63613			70 Watts			
Y	8	TRAFFIC SIGN	TRINITY ROAD	CLEETHORPES	530192.84	408167.54			63567			3 Watts			
Y	8A	TRAFFIC SIGN	TRINITY ROAD	CLEETHORPES	530192.84	408167.54			63568						
Y	9	TRAFFIC SIGN	TRINITY ROAD	CLEETHORPES	530192.84	408167.54			63595			4,700 Watts			
Y	1	TRAFFIC SIGN	WARDALL STREET	CLEETHORPES	530958.76	408590			63569			4 Watts			
Y	2	TRAFFIC SIGN	WARDALL STREET	CLEETHORPES	530922.69	408562.55			63570			7 Watts			
Y	3	TRAFFIC SIGN	WARDALL STREET	CLEETHORPES	530916.09	408562.13			63571			7 Watts			
Y	1	TRAFFIC SIGN	CORONATION ROAD	CLEETHORPES	530830.44	408338			63178			6 Watts			
Y	2	TRAFFIC SIGN	CORONATION ROAD	CLEETHORPES	530837.17	408330			63179			4 Watts			
Y	3	TRAFFIC SIGN	CORONATION ROAD	CLEETHORPES	530837.17	408330			63180			4 Watts			
Y	4	TRAFFIC SIGN	CORONATION ROAD	CLEETHORPES					68964			3 Watts			
Y	5	TRAFFIC SIGN	CORONATION ROAD	CLEETHORPES					68965			3 Watts			
Y	6	TRAFFIC SIGN	CORONATION ROAD	CLEETHORPES					68968			3 Watts			
Y	7	TRAFFIC SIGN	CORONATION ROAD	CLEETHORPES					68966			3 Watts			
Y	8	TRAFFIC SIGN	CORONATION ROAD	CLEETHORPES					68967			3 Watts			
Y	1	TRAFFIC SIGN	HIGH CLIFF ROAD	CLEETHORPES	530937.41	408613.57			68084			3 Watts			
Y	2	TRAFFIC SIGN	HIGH CLIFF ROAD	CLEETHORPES	530942.81	408616.99			68082			3 Watts			
Y	3	TRAFFIC SIGN	HIGH CLIFF ROAD	CLEETHORPES	530946.77	408613.03			68083			3 Watts			
Y	4	TRAFFIC SIGN	HIGH CLIFF ROAD	CLEETHORPES	530971.26	408574			63257			4 Watts			
Y	1	TRAFFIC SIGN	THRUNSCOE ROAD	CLEETHORPES	530680.56	408277			63557			11 Watts			
Y	2	TRAFFIC SIGN	THRUNSCOE ROAD	CLEETHORPES	530807.13	408057			63558			4 Watts			
Y	1	TRAFFIC SIGN	RICHMOND ROAD	CLEETHORPES	530256.09	408161.61			70243			3 Watts			
Y	1A	TRAFFIC SIGN	RICHMOND ROAD	CLEETHORPES	530256.09	408161.61			70244						
Y	2	TRAFFIC SIGN	RICHMOND ROAD	CLEETHORPES	530256.09	408161.61			70245			4,700 Watts			
Y	1	TRAFFIC SIGN	OXFORD STREET	CLEETHORPES	530773.46	408360			63456			4 Watts			
Y	2	TRAFFIC SIGN	OXFORD STREET	CLEETHORPES	530825	408337			63457			4 Watts			

Y	3	TRAFFIC SIGN	OXFORD STREET	CLEETHORPES	530829.44	408333			63459			3 Watts			
Y	4	TRAFFIC SIGN	OXFORD STREET	CLEETHORPES	530843.39	408322			63460			4 Watts			
Y	5	TRAFFIC SIGN	OXFORD STREET	CLEETHORPES	530842.68	408310			63461			4 Watts			
Y	6	TRAFFIC SIGN	OXFORD STREET	CLEETHORPES	531019.97	408150			63462			3 Watts			
Y	7	TRAFFIC SIGN	OXFORD STREET	CLEETHORPES	531018.31	408126			63463			6 Watts			
Y	1	TRAFFIC SIGN	SOUTH SEA LANE	HUMBERSTON	530987.77	404775			65570			6 Watts			
Y	1N	TRAFFIC SIGN	TETNEY ROAD	HUMBERSTON	530927.3	405232			65571			4 Watts			
Y	2	TRAFFIC SIGN	TETNEY ROAD	HUMBERSTON	530925.6	405224			65572			4 Watts			
Y	3	TRAFFIC SIGN	TETNEY ROAD	HUMBERSTON	530961.8	404350.02			65573			6 Watts			
Y	4	TRAFFIC SIGN	TETNEY ROAD	HUMBERSTON	530952.51	404352.35			65574			4 Watts			
Y	5	TRAFFIC SIGN	TETNEY ROAD	HUMBERSTON	530961.99	404350.02			65575			6 Watts			
Y	6	TRAFFIC SIGN	TETNEY ROAD	HUMBERSTON	530952.33	404351.57			65576			4 Watts			
Y	1	TRAFFIC SIGN	WILTON ROAD	HUMBERSTON	529877.08	406401			65577			3 Watts			
Y	1	TRAFFIC SIGN	GRIMSBY ROAD	HUMBERSTON	529591.83	406736			65527			4 Watts			
Y	10	TRAFFIC SIGN	GRIMSBY ROAD	HUMBERSTON	529727.64	406540.57			65536			49 Watts			
Y	11N	TRAFFIC SIGN	GRIMSBY ROAD	HUMBERSTON					69904						
Y	12	TRAFFIC SIGN	GRIMSBY ROAD	HUMBERSTON	529800.38	406462.84			65538			3 Watts			
Y	13	TRAFFIC SIGN	GRIMSBY ROAD	HUMBERSTON	529804.68	406459.53			65539			49 Watts			
Y	14	TRAFFIC SIGN	GRIMSBY ROAD	HUMBERSTON	529805.27	406459.11			65540			3 Watts			
Y	15	TRAFFIC SIGN	GRIMSBY ROAD	HUMBERSTON	529882.24	406423.83			65557			3 Watts			
Y	16	TRAFFIC SIGN	GRIMSBY ROAD	HUMBERSTON	529898.36	406397.15			65558			3 Watts			
Y	17N	TRAFFIC SIGN	GRIMSBY ROAD	HUMBERSTON	529905.16	406404.22			65541			4 Watts			
Y	18	TRAFFIC SIGN	GRIMSBY ROAD	HUMBERSTON	529908.29	406402.25			65542			11 Watts			
Y	19	TRAFFIC SIGN	GRIMSBY ROAD	HUMBERSTON	529909.28	406401.54			65543			11 Watts			
Y	20	TRAFFIC SIGN	GRIMSBY ROAD	HUMBERSTON	530055.92	406326.36			65544			7 Watts			
Y	21N	TRAFFIC SIGN	GRIMSBY ROAD	HUMBERSTON					68128						
Y	22	TRAFFIC SIGN	GRIMSBY ROAD	HUMBERSTON	530087.34	406298.78			65546			11 Watts			
Y	23	TRAFFIC SIGN	GRIMSBY ROAD	HUMBERSTON	530090.44	406302.63			65547			11 Watts			
Y	24	TRAFFIC SIGN	GRIMSBY ROAD	HUMBERSTON	530090.12	406298.05			65548			4 Watts			
Y	25	TRAFFIC SIGN	GRIMSBY ROAD	HUMBERSTON	530100.44	406284.44			65549			11 Watts			
Y	26N	TRAFFIC SIGN	GRIMSBY ROAD	HUMBERSTON					68129						
Y	27	TRAFFIC SIGN	GRIMSBY ROAD	HUMBERSTON	530110.64	406285.12			65551			11 Watts			
Y	28N	TRAFFIC SIGN	GRIMSBY ROAD	HUMBERSTON					68130						
Y	29	TRAFFIC SIGN	GRIMSBY ROAD	HUMBERSTON	530151.39	406252.8			65553			7 Watts			
Y	2N	TRAFFIC SIGN	GRIMSBY ROAD	HUMBERSTON	529592.65	406728			65528			4 Watts			
Y	3	TRAFFIC SIGN	GRIMSBY ROAD	HUMBERSTON	529609.82	406713.44			65529			7 Watts			
Y	30	TRAFFIC SIGN	GRIMSBY ROAD	HUMBERSTON	530281.41	406184.95			65554			11 Watts			
Y	31	TRAFFIC SIGN	GRIMSBY ROAD	HUMBERSTON	530284.55	406183.06			65555			11 Watts			
Y	32	TRAFFIC SIGN	GRIMSBY ROAD	HUMBERSTON	530285.34	406182.57			65556			11 Watts			
Y	33	TRAFFIC SIGN	GRIMSBY ROAD	HUMBERSTON	530553.32	406042.57			66458						
Y	34	TRAFFIC SIGN	GRIMSBY ROAD	HUMBERSTON	530558.01	406041.95			66459			4 Watts			
Y	35N	TRAFFIC SIGN	GRIMSBY ROAD	HUMBERSTON	530803.75	406070.21			66460			4 Watts			
Y	36N	TRAFFIC SIGN	GRIMSBY ROAD	HUMBERSTON	530808.07	406071.21			66461			4 Watts			
Y	37N	TRAFFIC SIGN	GRIMSBY ROAD	HUMBERSTON	530847.43	406073.58			66462			4 Watts			
Y	38N	TRAFFIC SIGN	GRIMSBY ROAD	HUMBERSTON	530859.01	406072.34			66463			4 Watts			
Y	4	TRAFFIC SIGN	GRIMSBY ROAD	HUMBERSTON	529600.74	406706.15			65530			7 Watts			
Y	5	TRAFFIC SIGN	GRIMSBY ROAD	HUMBERSTON	529609.82	406713.44			65531			7 Watts			
Y	6	TRAFFIC SIGN	GRIMSBY ROAD	HUMBERSTON	529600.74	406706.15			65532			7 Watts			
Y	7N	TRAFFIC SIGN	GRIMSBY ROAD	HUMBERSTON	529675.51	406612			65533						
Y	8N	TRAFFIC SIGN	GRIMSBY ROAD	HUMBERSTON	529676.46	406611			65534						
Y	9N	TRAFFIC SIGN	GRIMSBY ROAD	HUMBERSTON					69223						
Y	1N	TRAFFIC SIGN	PARK LANE	CLEETHORPES					68124						
Y	2N	TRAFFIC SIGN	PARK LANE	CLEETHORPES					68125						
Y	10N	TRAFFIC SIGN	NORTH SEA LANE	CLEETHORPES	531607	406248			63441						
Y	11	TRAFFIC SIGN	NORTH SEA LANE	CLEETHORPES	532176.18	406306.22			63442						
Y	12	TRAFFIC SIGN	NORTH SEA LANE	CLEETHORPES	532177.06	406306.31			63443			11 Watts			
Y	13N	TRAFFIC SIGN	NORTH SEA LANE	CLEETHORPES					68123						
Y	14N	TRAFFIC SIGN	NORTH SEA LANE	CLEETHORPES					67849						
Y	15	TRAFFIC SIGN	NORTH SEA LANE	CLEETHORPES	532246.87	406314.44			63446			11 Watts			
Y	16N	TRAFFIC SIGN	NORTH SEA LANE	CLEETHORPES	532250.33	406315			63447						
Y	17	TRAFFIC SIGN	NORTH SEA LANE	CLEETHORPES	532268.89	406318			63448			11 Watts			
Y	18	TRAFFIC SIGN	NORTH SEA LANE	CLEETHORPES	532274	406319			63449			11 Watts			
Y	1N	TRAFFIC SIGN	NORTH SEA LANE	CLEETHORPES					68120						
Y	2N	TRAFFIC SIGN	NORTH SEA LANE	CLEETHORPES					68121						
Y	3	TRAFFIC SIGN	NORTH SEA LANE	CLEETHORPES	531133.17	406162			63434			6 Watts			
Y	4	TRAFFIC SIGN	NORTH SEA LANE	CLEETHORPES	531257.57	406192			63435			6 Watts			
Y	5N	TRAFFIC SIGN	NORTH SEA LANE	CLEETHORPES	531300.36	406209.97			69128						
Y	6N	TRAFFIC SIGN	NORTH SEA LANE	CLEETHORPES	531305.09	406211.24			68122						
Y	7N	TRAFFIC SIGN	NORTH SEA LANE	CLEETHORPES	531453.08	406232.31			63438						
Y	8N	TRAFFIC SIGN	NORTH SEA LANE	CLEETHORPES	531457.57	406232.69			67848						
Y	9N	TRAFFIC SIGN	NORTH SEA LANE	CLEETHORPES	531603.14	406247.32			69129						
Y	10	TRAFFIC SIGN	CHURCH AVENUE	HUMBERSTON	530997.26	405290			65578			11 Watts			
Y	11	TRAFFIC SIGN	CHURCH AVENUE	HUMBERSTON	530985.68	405285			65579			11 Watts			
Y	12N	TRAFFIC SIGN	CHURCH AVENUE	HUMBERSTON					67847						
Y	13	TRAFFIC SIGN	CHURCH AVENUE	HUMBERSTON	530945.95	405271.04			65521			4 Watts			
Y	13A	TRAFFIC SIGN	CHURCH AVENUE	HUMBERSTON	530945.95	405271.04			65522						
Y	14	TRAFFIC SIGN	CHURCH AVENUE	HUMBERSTON	530952.92	405275.08			65523			4 Watts			
Y	14A	TRAFFIC SIGN	CHURCH AVENUE	HUMBERSTON	530952.92	405275.08			65524						
Y	1N	TRAFFIC SIGN	CHURCH AVENUE	HUMBERSTON	530877.79	406065.64			65511			3 Watts			
Y	2	TRAFFIC SIGN	CHURCH AVENUE	HUMBERSTON	530880.08	406057.98			65512			3 Watts			
Y	3	TRAFFIC SIGN	CHURCH AVENUE	HUMBERSTON	530975.4	405677.75			65513			3 Watts			
Y	4	TRAFFIC SIGN	CHURCH AVENUE	HUMBERSTON	530975.4	405677.75			65514			70 Watts			
Y	5	TRAFFIC SIGN	CHURCH AVENUE	HUMBERSTON	530969.09	405672.37			65515			3 Watts			
Y	6	TRAFFIC SIGN	CHURCH AVENUE	HUMBERSTON	530969.09	405672.37			65516			70 Watts			
Y	7N	TRAFFIC SIGN	CHURCH AVENUE	HUMBERSTON	531050.98	405353.02			69944						
Y	8N	TRAFFIC SIGN	CHURCH AVENUE	HUMBERSTON	531050.65	405347.21			69945						
Y	9N	TRAFFIC SIGN	CHURCH AVENUE	HUMBERSTON					67846						
Y	1	TRAFFIC SIGN	CHURCH LANE	HUMBERSTON	531048.35	405307			65525			3 Watts			
Y	1	TRAFFIC SIGN	ANTHONYS BANK ROAD	HUMBERSTON	532308.38	406314.05			65499			11 Watts			
Y	10	TRAFFIC SIGN	ANTHONYS BANK ROAD	HUMBERSTON	532370.89	406217.66			65508			4 Watts			
Y	11N	TRAFFIC SIGN	ANTHONYS BANK ROAD	HUMBERSTON	532379.31	406217.92			69135						
Y	12	TRAFFIC SIGN	ANTHONYS BANK ROAD	HUMBERSTON	532378.82	406211.41			65510			4 Watts			
Y	2	TRAFFIC SIGN	ANTHONYS BANK ROAD	HUMBERSTON	532307.24	406312.91			65500			11 Watts			
Y	3	TRAFFIC SIGN	ANTHONYS BANK ROAD	HUMBERSTON	532309.59	406308.94			65501			11 Watts			
Y	4N	TRAFFIC SIGN	ANTHONYS BANK ROAD	HUMBERSTON					67845						
Y	5N	TRAFFIC SIGN	ANTHONYS BANK ROAD	HUMBERSTON	532368.46	406231			65503						
Y	6	TRAFFIC SIGN	ANTHONYS BANK ROAD	HUMBERSTON	532370.96	406236.73			65504			6 Watts			
Y	7	TRAFFIC SIGN	ANTHONYS BANK ROAD	HUMBERSTON	532387.9	406224.79			65505			4 Watts			
Y	8N	TRAFFIC SIGN	ANTHONYS BANK ROAD	HUMBERSTON	532385.4	406231.66			65506						
Y	9N	TRAFFIC SIGN	ANTHONYS BANK ROAD	HUMBERSTON	532390.25	406232.95			69134						
Y	1	TRAFFIC SIGN	BRADFORD AVENUE	CLEETHORPES	531060.84	408058			63115			11 Watts			
Y	2	TRAFFIC SIGN	BRADFORD AVENUE	CLEETHORPES	531044.3	408059			63116			3 Watts			
Y	1	TRAFFIC SIGN	CHICHESTER ROAD	CLEETHORPES	531575.28	407563			63150			11 Watts			
Y	10	TRAFFIC SIGN	CHICHESTER ROAD	CLEETHORPES	531141.09	407418.05			66548			61 Watts			
Y	11	TRAFFIC SIGN	CHICHESTER ROAD	CLEETHORPES	530444.8	407638			63157			4 Watts			
Y	12	TRAFFIC SIGN	CHICHESTER ROAD	CLEETHORPES	530462.42	407645.25			63158			3 Watts			
Y	13N	TRAFFIC SIGN	CHICHESTER ROAD	CLEETHORPES					67868						
Y	14N	TRAFFIC SIGN	CHICHESTER ROAD	CLEETHORPES	530443.1	407653			63160						
Y	2	TRAFFIC SIGN	CHICHESTER ROAD	CLEETHORPES	531571.42	407561			63151			11 Watts			
Y	3	TRAFFIC SIGN	CHICHESTER ROAD	CLEETHORPES	531395.95	407442.69			63152			6 Watts			

Y	4	TRAFFIC SIGN	CHICHESTER ROAD	CLEETHORPES	531393.81	407441.62			63581			49 Watts			
Y	5	TRAFFIC SIGN	CHICHESTER ROAD	CLEETHORPES	531392.5	407440.9			63153			6 Watts			
Y	6N	TRAFFIC SIGN	CHICHESTER ROAD	CLEETHORPES					68292						
Y	7	TRAFFIC SIGN	CHICHESTER ROAD	CLEETHORPES	531145.79	407408.01			66545			3 Watts			
Y	8	TRAFFIC SIGN	CHICHESTER ROAD	CLEETHORPES	531145.79	407408.01			66547			61 Watts			
Y	9	TRAFFIC SIGN	CHICHESTER ROAD	CLEETHORPES	531141.09	407418.05			66546			3 Watts			
Y	1	TRAFFIC SIGN	HARDYS ROAD	CLEETHORPES	530813.15	408024			63237			6 Watts			
Y	10N	TRAFFIC SIGN	KINGSWAY	CLEETHORPES					68839						
Y	11	TRAFFIC SIGN	KINGSWAY	CLEETHORPES	531412.91	407989			63369			11 Watts			
Y	12	TRAFFIC SIGN	KINGSWAY	CLEETHORPES	531399.5	407979			63370			3 Watts			
Y	13N	TRAFFIC SIGN	KINGSWAY	CLEETHORPES	531408.93	407960.13			63371						
Y	14N	TRAFFIC SIGN	KINGSWAY	CLEETHORPES	531408.61	407951.71			63372						
Y	15	TRAFFIC SIGN	KINGSWAY	CLEETHORPES	531399.62	407942			63373			11 Watts			
Y	1N	TRAFFIC SIGN	KINGSWAY	CLEETHORPES					68269						
Y	2N	TRAFFIC SIGN	KINGSWAY	CLEETHORPES					68270						
Y	3N	TRAFFIC SIGN	KINGSWAY	CLEETHORPES	531214.87	408252			63361						
Y	4	TRAFFIC SIGN	KINGSWAY	CLEETHORPES	531217	408249			63362			3 Watts			
Y	5N	TRAFFIC SIGN	KINGSWAY	CLEETHORPES	531217.42	408249			63363						
Y	6	TRAFFIC SIGN	KINGSWAY	CLEETHORPES	531226.24	408246			63364			7 Watts			
Y	7	TRAFFIC SIGN	KINGSWAY	CLEETHORPES	531226.59	408226			63365			3 Watts			
Y	8N	TRAFFIC SIGN	KINGSWAY	CLEETHORPES	531233.33	408226			63366			4 Watts			
Y	9N	TRAFFIC SIGN	KINGSWAY	CLEETHORPES	531236.05	408221			63367						
Y	1	TRAFFIC SIGN	QUEENS PARADE	CLEETHORPES	531215.53	408234			63483			3 Watts			
Y	10	TRAFFIC SIGN	QUEENS PARADE	CLEETHORPES	530820.59	408044			63492			7 Watts			
Y	2N	TRAFFIC SIGN	QUEENS PARADE	CLEETHORPES	531037.4	408143			63484			3 Watts			
Y	3N	TRAFFIC SIGN	QUEENS PARADE	CLEETHORPES	531032.24	408141			63485			3 Watts			
Y	4	TRAFFIC SIGN	QUEENS PARADE	CLEETHORPES	531032.75	408134			63486			6 Watts			
Y	5	TRAFFIC SIGN	QUEENS PARADE	CLEETHORPES	531006.97	408136			63487			4 Watts			
Y	6	TRAFFIC SIGN	QUEENS PARADE	CLEETHORPES	530992.01	408124			63488			3 Watts			
Y	7	TRAFFIC SIGN	QUEENS PARADE	CLEETHORPES	530986.68	408122			63489			3 Watts			
Y	8N	TRAFFIC SIGN	QUEENS PARADE	CLEETHORPES					68840						
Y	9N	TRAFFIC SIGN	QUEENS PARADE	CLEETHORPES					67844						
Y	1N	TRAFFIC SIGN	CROMWELL ROAD	CLEETHORPES	531389.44	407934.29			63184						
Y	2	TRAFFIC SIGN	CROMWELL ROAD	CLEETHORPES	531388.79	407934.1			63185						
Y	3N	TRAFFIC SIGN	CROMWELL ROAD	CLEETHORPES	531386.97	407933.13			63186						
Y	4	TRAFFIC SIGN	CROMWELL ROAD	CLEETHORPES	530971.38	407757			63187			7 Watts			
Y	1X	TRAFFIC SIGN	KINGS ROAD AND MERIDIAN PARK	CLEETHORPES	531715.49	407395.22			63349			7 Watts			
Y	2X	TRAFFIC SIGN	KINGS ROAD AND MERIDIAN PARK	CLEETHORPES	531721.37	407381.4			63350			7 Watts			
Y	3X	TRAFFIC SIGN	KINGS ROAD AND MERIDIAN PARK	CLEETHORPES	531710.9	407388.24			63351			7 Watts			
Y	1	TRAFFIC SIGN	MERIDIAN POINT ACCESS ROAD	CLEETHORPES	531703.16	407377.49			63391						
Y	2	TRAFFIC SIGN	MERIDIAN POINT ACCESS ROAD	CLEETHORPES	531696.48	407376.63			63392			11 Watts			
Y	3	TRAFFIC SIGN	MERIDIAN POINT ACCESS ROAD	CLEETHORPES	531667.91	407362.99			63393			7 Watts			
Y	1	TRAFFIC SIGN	MERIDIAN POINT SERVICE ROAD	CLEETHORPES	531852.86	407121.92			63394			11 Watts			
Y	2	TRAFFIC SIGN	MERIDIAN POINT SERVICE ROAD	CLEETHORPES	531844.82	407126.86			63395			7 Watts			
Y	3	TRAFFIC SIGN	MERIDIAN POINT SERVICE ROAD	CLEETHORPES	531848.32	407119.04			63396			11 Watts			
Y	1	TRAFFIC SIGN	HUMBERSTON ROAD	CLEETHORPES	528946.09	408071.54			63283						
Y	10	TRAFFIC SIGN	HUMBERSTON ROAD	CLEETHORPES	529185.1	407728			63292			4 Watts			
Y	11	TRAFFIC SIGN	HUMBERSTON ROAD	CLEETHORPES	529191.92	407728.63			63293			11 Watts			
Y	12	TRAFFIC SIGN	HUMBERSTON ROAD	CLEETHORPES	529181.52	407722.78			63294			11 Watts			
Y	13	TRAFFIC SIGN	HUMBERSTON ROAD	CLEETHORPES	529191.92	407728.63			63295			11 Watts			
Y	14	TRAFFIC SIGN	HUMBERSTON ROAD	CLEETHORPES	529181.52	407722.78			63296			11 Watts			
Y	15	TRAFFIC SIGN	HUMBERSTON ROAD	CLEETHORPES	529326.68	407440.24			63297			11 Watts			
Y	16	TRAFFIC SIGN	HUMBERSTON ROAD	CLEETHORPES	529326.02	407404.61			63298			11 Watts			
Y	17	TRAFFIC SIGN	HUMBERSTON ROAD	CLEETHORPES	529326.59	407400.49			63299			11 Watts			
Y	18	TRAFFIC SIGN	HUMBERSTON ROAD	CLEETHORPES	529340.69	407273.66			63300			3 Watts			
Y	19	TRAFFIC SIGN	HUMBERSTON ROAD	CLEETHORPES	529340.93	407269.37			63301			3 Watts			
Y	2	TRAFFIC SIGN	HUMBERSTON ROAD	CLEETHORPES	528947.47	408061.69			63284						
Y	20	TRAFFIC SIGN	HUMBERSTON ROAD	CLEETHORPES	529334.49	407263.13			63302			11 Watts			
Y	21	TRAFFIC SIGN	HUMBERSTON ROAD	CLEETHORPES	529352.36	407173.68			63303			6 Watts			
Y	22	TRAFFIC SIGN	HUMBERSTON ROAD	CLEETHORPES	529352.97	407171.61			63304			11 Watts			
Y	23	TRAFFIC SIGN	HUMBERSTON ROAD	CLEETHORPES	529353.46	407170.03			63305			6 Watts			
Y	24	TRAFFIC SIGN	HUMBERSTON ROAD	CLEETHORPES	529553.19	406783.73			63306			4 Watts			
Y	25	TRAFFIC SIGN	HUMBERSTON ROAD	CLEETHORPES	529555.26	406773.26			63307			4 Watts			
Y	5N	TRAFFIC SIGN	HUMBERSTON ROAD	CLEETHORPES					68290						
Y	6N	TRAFFIC SIGN	HUMBERSTON ROAD	CLEETHORPES					68291						
Y	7	TRAFFIC SIGN	HUMBERSTON ROAD	CLEETHORPES	529133.6	407806			63289						
Y	8	TRAFFIC SIGN	HUMBERSTON ROAD	CLEETHORPES	529135.14	407802			63290						
Y	9	TRAFFIC SIGN	HUMBERSTON ROAD	CLEETHORPES	529181.49	407733			63291			4 Watts			
Y	1	TRAFFIC SIGN	ROSEMARY WAY	CLEETHORPES	530109.5	406302.26			63493			7 Watts			
Y	1	TRAFFIC SIGN	VILLAGE WAY	HEALING	523402.08	411492.83			69014			3 Watts			
Y	2	TRAFFIC SIGN	VILLAGE WAY	HEALING	523398.28	411494.25			69015			3 Watts			
Y	1	TRAFFIC SIGN	MULBERRY LANE	LACEBY	521410.24	407274.01			67031			4 Watts			
Y	2	TRAFFIC SIGN	MULBERRY LANE	LACEBY	521415.33	407266.73			67026			6 Watts			
Y	3	TRAFFIC SIGN	MULBERRY LANE	LACEBY	521415.12	407273.79			67032			4 Watts			
Y	1	TRAFFIC SIGN	CORDEAUX DRIVE	GRIMSBY					66836			6 Watts			
Y	1	TRAFFIC SIGN	MATHEW FORD WAY	IMMINGHAM					66826			6 Watts			
Y	10N	TRAFFIC SIGN	MATHEW FORD WAY	IMMINGHAM					66822						
Y	2	TRAFFIC SIGN	MATHEW FORD WAY	IMMINGHAM					67973			6 Watts			
Y	3	TRAFFIC SIGN	MATHEW FORD WAY	IMMINGHAM					67974			6 Watts			
Y	4	TRAFFIC SIGN	MATHEW FORD WAY	IMMINGHAM					67975			6 Watts			
Y	5	TRAFFIC SIGN	MATHEW FORD WAY	IMMINGHAM					67976			3 Watts			
Y	6	TRAFFIC SIGN	MATHEW FORD WAY	IMMINGHAM					68616			6 Watts			
Y	7	TRAFFIC SIGN	MATHEW FORD WAY	IMMINGHAM					66823			6 Watts			
Y	8	TRAFFIC SIGN	MATHEW FORD WAY	IMMINGHAM					66824			6 Watts			
Y	9	TRAFFIC SIGN	MATHEW FORD WAY	IMMINGHAM					66825			6 Watts			
Y	1N	TRAFFIC SIGN	BECKLANDS AVENUE	NEW WALTHAM	527615.78	404876.61			68446						
Y	2N	TRAFFIC SIGN	BECKLANDS AVENUE	NEW WALTHAM	527620.58	404872.03			68447						
Y	1N	TRAFFIC SIGN	SIDINGS ROAD	GRIMSBY					69781						
Y	2N	TRAFFIC SIGN	SIDINGS ROAD	GRIMSBY					69782						
Y	3	TRAFFIC SIGN	SIDINGS ROAD	GRIMSBY	524896.51	409857.29			67509			7 Watts			
Y	4	TRAFFIC SIGN	SIDINGS ROAD	GRIMSBY	525071.25	409961.43			67510			7 Watts			
Y	5	TRAFFIC SIGN	SIDINGS ROAD	GRIMSBY	525104.57	409966.04			67514			3 Watts			
Y	6	TRAFFIC SIGN	SIDINGS ROAD	GRIMSBY	525112.32	409967.72			67512			3 Watts			
Y	7	TRAFFIC SIGN	SIDINGS ROAD	GRIMSBY	525136.84	409960.38			67513			3 Watts			
Y	8	TRAFFIC SIGN	SIDINGS ROAD	GRIMSBY	525138.09	409953.89			67515			3 Watts			
Y	9	TRAFFIC SIGN	SIDINGS ROAD	GRIMSBY	525142.63	409908.35			67511			7 Watts			
Y	1X	TRAFFIC SIGN	SIDINGS ROAD ROUNDABOUT	GRIMSBY	525118.02	409977.17			69098			7 Watts			
Y	1XA	TRAFFIC SIGN	SIDINGS ROAD ROUNDABOUT	GRIMSBY	525118.02	409977.17			69101						
Y	2X	TRAFFIC SIGN	SIDINGS ROAD ROUNDABOUT	GRIMSBY	525134.88	409982.47			69099			7 Watts			
Y	2XA	TRAFFIC SIGN	SIDINGS ROAD ROUNDABOUT	GRIMSBY	525134.88	409982.47			69103						
Y	3X	TRAFFIC SIGN	SIDINGS ROAD ROUNDABOUT	GRIMSBY	525128.49	409967.65			69100			7 Watts			
Y	3XA	TRAFFIC SIGN	SIDINGS ROAD ROUNDABOUT	GRIMSBY	525128.49	409967.65			69102						
Y	1X	TRAFFIC SIGN	LITTLE COATES ROUNDABOUT	GRIMSBY	524589.34	408366.01			69028			3 Watts			
Y	1XA	TRAFFIC SIGN	LITTLE COATES ROUNDABOUT	GRIMSBY	524589.34	408366.01			69024						
Y	2X	TRAFFIC SIGN	LITTLE COATES ROUNDABOUT	GRIMSBY	524600.61	408355.98			69029			3 Watts			
Y	2XA	TRAFFIC SIGN	LITTLE COATES ROUNDABOUT	GRIMSBY	524600.61	408355.98			69025						
Y	3X	TRAFFIC SIGN	LITTLE COATES ROUNDABOUT	GRIMSBY	524591.14	408343.46			69030			3 Watts			
Y	3XA	TRAFFIC SIGN	LITTLE COATES ROUNDABOUT	GRIMSBY	524591.14	408343.46			69026						
Y	4X	TRAFFIC SIGN	LITTLE COATES ROUNDABOUT	GRIMSBY	524577.79	408353.89			69031			3 Watts			
Y	4XA	TRAFFIC SIGN	LITTLE COATES ROUNDABOUT	GRIMSBY	524577.79	408353.89			69027						

Y	1	TRAFFIC SIGN	HADLEIGH ROAD AND SOMERTON	IMMINGHAM	519083.32	414230.44			65602			4 Watts			
Y	2	TRAFFIC SIGN	HADLEIGH ROAD AND SOMERTON	IMMINGHAM	519085.57	414216.57			65603			4 Watts			
Y	3	TRAFFIC SIGN	HADLEIGH ROAD AND SOMERTON	IMMINGHAM	519069.75	414230.51			65604			4 Watts			
Y	1X	TRAFFIC SIGN	HADLEIGH ROAD AND TALBOT ROAD	IMMINGHAM	518827.5	414415.38			65605			4 Watts			
Y	2X	TRAFFIC SIGN	HADLEIGH ROAD AND TALBOT ROAD	IMMINGHAM	518842.38	414410.25			65606			3 Watts			
Y	3X	TRAFFIC SIGN	HADLEIGH ROAD AND TALBOT ROAD	IMMINGHAM	518830.31	414405.88			65607			4 Watts			
Y	1N	TRAFFIC SIGN	BLUESTONE LANE	IMMINGHAM					68026						
Y	2N	TRAFFIC SIGN	BLUESTONE LANE	IMMINGHAM					68027						
Y	3	TRAFFIC SIGN	BLUESTONE LANE	IMMINGHAM	517608.09	414369			65585			4 Watts			
Y	4	TRAFFIC SIGN	BLUESTONE LANE	IMMINGHAM	517553.26	414538.44			69229			3 Watts			
Y	4A	TRAFFIC SIGN	BLUESTONE LANE	IMMINGHAM	517553.26	414538.44			69231						
Y	5	TRAFFIC SIGN	BLUESTONE LANE	IMMINGHAM	517553.26	414538.44			69233			4,700 Watts			
Y	6	TRAFFIC SIGN	BLUESTONE LANE	IMMINGHAM	517537.08	414700.19			69230			3 Watts			
Y	6A	TRAFFIC SIGN	BLUESTONE LANE	IMMINGHAM	517537.08	414700.19			69232						
Y	7	TRAFFIC SIGN	BLUESTONE LANE	IMMINGHAM	517537.08	414700.19			69234			4,700 Watts			
Y	1	TRAFFIC SIGN	HAWTHORN AVENUE	IMMINGHAM	519252.94	415146.85			65610			11 Watts			
Y	1A	TRAFFIC SIGN	HAWTHORN AVENUE	IMMINGHAM	519252.94	415146.85			65611						
Y	1B	TRAFFIC SIGN	HAWTHORN AVENUE	IMMINGHAM	519252.94	415146.85			65612						
Y	2	TRAFFIC SIGN	HAWTHORN AVENUE	IMMINGHAM	519251.34	415155.28			67154			6 Watts			
Y	2A	TRAFFIC SIGN	HAWTHORN AVENUE	IMMINGHAM	519251.34	415155.28			67155						
Y	3	TRAFFIC SIGN	HAWTHORN AVENUE	IMMINGHAM	519252.94	415146.85			69236			14 Watts			
Y	1	TRAFFIC SIGN	HUMBERVILLE ROAD	IMMINGHAM	518999.64	415166			65615			7 Watts			
Y	2	TRAFFIC SIGN	HUMBERVILLE ROAD	IMMINGHAM	518923.81	415176			65616			6 Watts			
Y	1	TRAFFIC SIGN	MARGARET STREET	IMMINGHAM	518128.96	414538.71			65694			4 Watts			
Y	2	TRAFFIC SIGN	MARGARET STREET	IMMINGHAM	518312.02	414156.97			69247			3 Watts			
Y	2A	TRAFFIC SIGN	MARGARET STREET	IMMINGHAM	518312.02	414156.97			69254						
Y	3	TRAFFIC SIGN	MARGARET STREET	IMMINGHAM	518312.02	414156.97			69252			4,700 Watts			
Y	4	TRAFFIC SIGN	MARGARET STREET	IMMINGHAM	518355.76	414063.65			69248			3 Watts			
Y	4A	TRAFFIC SIGN	MARGARET STREET	IMMINGHAM	518355.76	414063.65			69255						
Y	5	TRAFFIC SIGN	MARGARET STREET	IMMINGHAM	518355.76	414063.65			69253			4,700 Watts			
Y	1	TRAFFIC SIGN	PELHAM ROAD	IMMINGHAM					67140			6 Watts			
Y	10N	TRAFFIC SIGN	PELHAM ROAD	IMMINGHAM	518427.78	414719.61			65699			4 Watts			
Y	11N	TRAFFIC SIGN	PELHAM ROAD	IMMINGHAM	518407.95	414707.72			65700			4 Watts			
Y	12	TRAFFIC SIGN	PELHAM ROAD	IMMINGHAM	518403.51	414704.67			65701			4 Watts			
Y	13	TRAFFIC SIGN	PELHAM ROAD	IMMINGHAM	518292.44	414638.12			65702			11 Watts			
Y	14	TRAFFIC SIGN	PELHAM ROAD	IMMINGHAM	518286.25	414636			65703			11 Watts			
Y	15	TRAFFIC SIGN	PELHAM ROAD	IMMINGHAM	518144.47	414560			65704			11 Watts			
Y	16	TRAFFIC SIGN	PELHAM ROAD	IMMINGHAM	518138.6	414557			65705			6 Watts			
Y	17	TRAFFIC SIGN	PELHAM ROAD	IMMINGHAM	517597.79	414349			65706						
Y	18	TRAFFIC SIGN	PELHAM ROAD	IMMINGHAM	517580.77	414322			65707			11 Watts			
Y	19	TRAFFIC SIGN	PELHAM ROAD	IMMINGHAM					67150			6 Watts			
Y	1A	TRAFFIC SIGN	PELHAM ROAD	IMMINGHAM					67144						
Y	2	TRAFFIC SIGN	PELHAM ROAD	IMMINGHAM					67141			6 Watts			
Y	20	TRAFFIC SIGN	PELHAM ROAD	IMMINGHAM					67151			6 Watts			
Y	21	TRAFFIC SIGN	PELHAM ROAD	IMMINGHAM					67142			6 Watts			
Y	21A	TRAFFIC SIGN	PELHAM ROAD	IMMINGHAM					67146						
Y	22	TRAFFIC SIGN	PELHAM ROAD	IMMINGHAM					67143			6 Watts			
Y	22A	TRAFFIC SIGN	PELHAM ROAD	IMMINGHAM					67147						
Y	2A	TRAFFIC SIGN	PELHAM ROAD	IMMINGHAM					67145						
Y	3	TRAFFIC SIGN	PELHAM ROAD	IMMINGHAM					67148			6 Watts			
Y	4	TRAFFIC SIGN	PELHAM ROAD	IMMINGHAM					67149			6 Watts			
Y	4A	TRAFFIC SIGN	PELHAM ROAD	IMMINGHAM	519169.83	415268			65695						
Y	5	TRAFFIC SIGN	PELHAM ROAD	IMMINGHAM	518996.21	415172			65746			1,610 Watts			
Y	6	TRAFFIC SIGN	PELHAM ROAD	IMMINGHAM	518992.31	415182			65747			1,610 Watts			
Y	7	TRAFFIC SIGN	PELHAM ROAD	IMMINGHAM	518475.21	414733.87			65696			11 Watts			
Y	8	TRAFFIC SIGN	PELHAM ROAD	IMMINGHAM	518475.21	414733.87			65697			11 Watts			
Y	9N	TRAFFIC SIGN	PELHAM ROAD	IMMINGHAM	518438.95	414725.64			65698			4 Watts			
Y	1	TRAFFIC SIGN	TRENCHARD CLOSE	IMMINGHAM	519299.23	415090.66			65714			11 Watts			
Y	1A	TRAFFIC SIGN	TRENCHARD CLOSE	IMMINGHAM	519299.23	415090.66			65715						
Y	1B	TRAFFIC SIGN	TRENCHARD CLOSE	IMMINGHAM	519299.23	415090.66			65716						
Y	2	TRAFFIC SIGN	TRENCHARD CLOSE	IMMINGHAM	519294.14	415096.15			67152			6 Watts			
Y	2A	TRAFFIC SIGN	TRENCHARD CLOSE	IMMINGHAM					67153						
Y	3	TRAFFIC SIGN	TRENCHARD CLOSE	IMMINGHAM	519299.23	415090.66			69235			14 Watts			
Y	1	TRAFFIC SIGN	WASHDYKE LANE	IMMINGHAM	518411.43	414727.32			65719			4 Watts			
Y	2	TRAFFIC SIGN	WASHDYKE LANE	IMMINGHAM	518404.74	414736.09			65720			4 Watts			
Y	3	TRAFFIC SIGN	WASHDYKE LANE	IMMINGHAM	518309.24	414853.84			65748			3 Watts			
Y	4	TRAFFIC SIGN	WASHDYKE LANE	IMMINGHAM	518313.08	414861.31			65749			3 Watts			
Y	5	TRAFFIC SIGN	WASHDYKE LANE	IMMINGHAM	518292.46	414870.25			69241			3 Watts			
Y	5A	TRAFFIC SIGN	WASHDYKE LANE	IMMINGHAM	518292.46	414870.25			69242						
Y	6	TRAFFIC SIGN	WASHDYKE LANE	IMMINGHAM	518292.46	414870.25			69244			4,700 Watts			
Y	7	TRAFFIC SIGN	WASHDYKE LANE	IMMINGHAM	518169.12	415046.05			69243			3 Watts			
Y	7A	TRAFFIC SIGN	WASHDYKE LANE	IMMINGHAM	518169.12	415046.05			69245						
Y	8	TRAFFIC SIGN	WASHDYKE LANE	IMMINGHAM	518169.12	415046.05			69246			4,700 Watts			
Y	2	TRAFFIC SIGN	WORSLEY ROAD	IMMINGHAM	518716.29	414971			65743			4 Watts			
Y	2A	TRAFFIC SIGN	WORSLEY ROAD	IMMINGHAM	518723.74	414983			65745						
Y	1	TRAFFIC SIGN	HUME BRAE	IMMINGHAM	517613.8	414170			65619			6 Watts			
Y	1A	TRAFFIC SIGN	HUME BRAE	IMMINGHAM	517613.8	414170			65620						
Y	2	TRAFFIC SIGN	HUME BRAE	IMMINGHAM					67158			6 Watts			
Y	2A	TRAFFIC SIGN	HUME BRAE	IMMINGHAM					67157						
Y	3	TRAFFIC SIGN	HUME BRAE	IMMINGHAM					67156			6 Watts			
Y	4	TRAFFIC SIGN	HUME BRAE	IMMINGHAM					67159			6 Watts			
Y	1	TRAFFIC SIGN	KINGS ROAD	IMMINGHAM	519195.21	415264			65622			11 Watts			
Y	10	TRAFFIC SIGN	KINGS ROAD	IMMINGHAM	519722.09	414830.1			65633			11 Watts			
Y	11	TRAFFIC SIGN	KINGS ROAD	IMMINGHAM	519713.9	414840.9			65634			11 Watts			
Y	2	TRAFFIC SIGN	KINGS ROAD	IMMINGHAM	519198.63	415261			65623			11 Watts			
Y	3	TRAFFIC SIGN	KINGS ROAD	IMMINGHAM	519192.96	415257			65624			4 Watts			
Y	4	TRAFFIC SIGN	KINGS ROAD	IMMINGHAM	519523.74	414771.25			65625			4 Watts			
Y	5	TRAFFIC SIGN	KINGS ROAD	IMMINGHAM	519513.61	414766.9			65626			11 Watts			
Y	6	TRAFFIC SIGN	KINGS ROAD	IMMINGHAM	519523.74	414771.25			65627			4 Watts			
Y	6A	TRAFFIC SIGN	KINGS ROAD	IMMINGHAM	519523.74	414771.25			65628						
Y	7	TRAFFIC SIGN	KINGS ROAD	IMMINGHAM	519513.61	414766.9			65629			11 Watts			
Y	7A	TRAFFIC SIGN	KINGS ROAD	IMMINGHAM	519513.61	414766.9			65630						
Y	8	TRAFFIC SIGN	KINGS ROAD	IMMINGHAM	519713.9	414840.9			65631			11 Watts			
Y	9	TRAFFIC SIGN	KINGS ROAD	IMMINGHAM	519722.09	414830.1			65632			11 Watts			
Y	10	TRAFFIC SIGN	MANBY ROAD	IMMINGHAM	518245.5	415788.7			65657			11 Watts			
Y	11	TRAFFIC SIGN	MANBY ROAD	IMMINGHAM	518255.1	415801.8			65658			11 Watts			
Y	12	TRAFFIC SIGN	MANBY ROAD	IMMINGHAM	518255.1	415801.8			65659			4 Watts			
Y	13	TRAFFIC SIGN	MANBY ROAD	IMMINGHAM	518245.5	415788.7			65660			11 Watts			
Y	14	TRAFFIC SIGN	MANBY ROAD	IMMINGHAM	518203.8	415812.6			65661			4 Watts			
Y	15	TRAFFIC SIGN	MANBY ROAD	IMMINGHAM	518157.9	415856.2			65662			6 Watts			
Y	15A	TRAFFIC SIGN	MANBY ROAD	IMMINGHAM	518157.9	415856.2			65663						
Y	16	TRAFFIC SIGN	MANBY ROAD	IMMINGHAM	518132.8	415855.6			65664			4 Watts			
Y	17	TRAFFIC SIGN	MANBY ROAD	IMMINGHAM	518141.2	415867.7			65665			11 Watts			
Y	18	TRAFFIC SIGN	MANBY ROAD	IMMINGHAM	518147.9	415876.1			65666			4 Watts			
Y	18A	TRAFFIC SIGN	MANBY ROAD	IMMINGHAM	518132.9	415856.1			65691						
Y	19	TRAFFIC SIGN	MANBY ROAD	IMMINGHAM	518110.1	415901.2			65667			4 Watts			
Y	20	TRAFFIC SIGN	MANBY ROAD	IMMINGHAM	518075.7	415924.8			65668			11 Watts			
Y	21	TRAFFIC SIGN	MANBY ROAD	IMMINGHAM	518056.3	415926.3			65669			4 Watts			
Y	22	TRAFFIC SIGN	MANBY ROAD	IMMINGHAM	518001.2	415974.8			65670			4 Watts			
Y	23	TRAFFIC SIGN	MANBY ROAD	IMMINGHAM	517985.6	415974.5			65671			4 Watts			

Y	24	TRAFFIC SIGN	MANBY ROAD	IMMINGHAM	517922.9	416029.1			65672			4 Watts			
Y	25	TRAFFIC SIGN	MANBY ROAD	IMMINGHAM	517906.1	416028.8			65673			4 Watts			
Y	3	TRAFFIC SIGN	MANBY ROAD	IMMINGHAM	518798.22	415118.63			65643			4 Watts			
Y	4	TRAFFIC SIGN	MANBY ROAD	IMMINGHAM	518532.8	415456.5			65652			3 Watts			
Y	4A	TRAFFIC SIGN	MANBY ROAD	IMMINGHAM	518532.8	415456.5			66381						
Y	5	TRAFFIC SIGN	MANBY ROAD	IMMINGHAM	518529.1	415462.9			65653			11 Watts			
Y	5A	TRAFFIC SIGN	MANBY ROAD	IMMINGHAM	518529.1	415462.9			66380						
Y	6	TRAFFIC SIGN	MANBY ROAD	IMMINGHAM	518488.1	415539.9			65654			4 Watts			
Y	7	TRAFFIC SIGN	MANBY ROAD	IMMINGHAM	518431.1	415593.2			65655			3 Watts			
Y	7A	TRAFFIC SIGN	MANBY ROAD	IMMINGHAM	518431.1	415593.2			66382						
Y	8	TRAFFIC SIGN	MANBY ROAD	IMMINGHAM	518377.1	415668.4			66383			11 Watts			
Y	9	TRAFFIC SIGN	MANBY ROAD	IMMINGHAM	518281.5	415784.3			66384			11 Watts			
Y	1	TRAFFIC SIGN	PRINCESS STREET	IMMINGHAM	518277.9	414617			65710			4 Watts			
Y	1	TRAFFIC SIGN	WINSLOW DRIVE	IMMINGHAM	518047.1	414521			65739			3 Watts			
Y	1	TRAFFIC SIGN	HALL PARK ROAD	IMMINGHAM					67850						
Y	2	TRAFFIC SIGN	HALL PARK ROAD	IMMINGHAM	518733.31	415390			65609			11 Watts			
Y	1	TRAFFIC SIGN	MANBY ROAD WAREHOUSE WEST	IMMINGHAM	518409.11	415599.22			69237			3 Watts			
Y	1A	TRAFFIC SIGN	MANBY ROAD WAREHOUSE WEST	IMMINGHAM					69240						
Y	2	TRAFFIC SIGN	MANBY ROAD WAREHOUSE WEST	IMMINGHAM	518404.47	415608.66			69239			3 Watts			
Y	3	TRAFFIC SIGN	MANBY ROAD WAREHOUSE WEST	IMMINGHAM	518409.11	415599.22			69238			3 Watts			
Y	1	TRAFFIC SIGN	MANBY ROAD BY PASS	IMMINGHAM	518535.8	415484.4			65721			3 Watts			
Y	10	TRAFFIC SIGN	MANBY ROAD BY PASS	IMMINGHAM	518645.1	415418.9			65734			6 Watts			
Y	11	TRAFFIC SIGN	MANBY ROAD BY PASS	IMMINGHAM	518707.8	415398.4			65735						
Y	12	TRAFFIC SIGN	MANBY ROAD BY PASS	IMMINGHAM	519175.5	415307.9			65737			4 Watts			
Y	13	TRAFFIC SIGN	MANBY ROAD BY PASS	IMMINGHAM	519163.1	415297.8			66378			4 Watts			
Y	14	TRAFFIC SIGN	MANBY ROAD BY PASS	IMMINGHAM	519175.5	415307.9			66377			4 Watts			
Y	15	TRAFFIC SIGN	MANBY ROAD BY PASS	IMMINGHAM	519163.1	415297.8			66379			4 Watts			
Y	16	TRAFFIC SIGN	MANBY ROAD BY PASS	IMMINGHAM	519193.2	415277.6			65736			4 Watts			
Y	2	TRAFFIC SIGN	MANBY ROAD BY PASS	IMMINGHAM	518581.1	415440.5			65722			3 Watts			
Y	3	TRAFFIC SIGN	MANBY ROAD BY PASS	IMMINGHAM	518610.3	415419.4			65723			3 Watts			
Y	3A	TRAFFIC SIGN	MANBY ROAD BY PASS	IMMINGHAM	518610.3	415419.4			65724						
Y	3B	TRAFFIC SIGN	MANBY ROAD BY PASS	IMMINGHAM	518610.3	415419.4			66375						
Y	4	TRAFFIC SIGN	MANBY ROAD BY PASS	IMMINGHAM	518626.6	415412.5			65725			3 Watts			
Y	4A	TRAFFIC SIGN	MANBY ROAD BY PASS	IMMINGHAM	518626.6	415412.5			65726						
Y	4B	TRAFFIC SIGN	MANBY ROAD BY PASS	IMMINGHAM	518626.6	415412.5			66376						
Y	5	TRAFFIC SIGN	MANBY ROAD BY PASS	IMMINGHAM	518610.3	415419.4			65727			3 Watts			
Y	5A	TRAFFIC SIGN	MANBY ROAD BY PASS	IMMINGHAM	518610.3	415419.4			65728						
Y	6	TRAFFIC SIGN	MANBY ROAD BY PASS	IMMINGHAM	518626.6	415412.5			65729			3 Watts			
Y	6A	TRAFFIC SIGN	MANBY ROAD BY PASS	IMMINGHAM	518626.6	415412.5			65730						
Y	7	TRAFFIC SIGN	MANBY ROAD BY PASS	IMMINGHAM	518611.1	415414.8			65731			3 Watts			
Y	8	TRAFFIC SIGN	MANBY ROAD BY PASS	IMMINGHAM	518640.4	415420.2			65732			6 Watts			
Y	9	TRAFFIC SIGN	MANBY ROAD BY PASS	IMMINGHAM	518644.2	415419.3			65733						
Y	1	TRAFFIC SIGN	STATION ROAD	HABROUGH	514715.84	413643			65392			3 Watts			
Y	1A	TRAFFIC SIGN	STATION ROAD	HABROUGH	514715.84	413643			65393						
Y	2	TRAFFIC SIGN	STATION ROAD	HABROUGH	515446	414210			65394			7 Watts			
Y	2A	TRAFFIC SIGN	STATION ROAD	HABROUGH	515446	414210			65395						
Y	3	TRAFFIC SIGN	STATION ROAD	HABROUGH	515453.23	414327			65396			4 Watts			
Y	1	TRAFFIC SIGN	CALDER CLOSE	IMMINGHAM	517380.13	414249.29			65591			3 Watts			
Y	1A	TRAFFIC SIGN	CALDER CLOSE	IMMINGHAM	517380.13	414249.29			65592						
Y	1	TRAFFIC SIGN	HABROUGH ROAD	IMMINGHAM	517575.73	414341.88			65593			4 Watts			
Y	10	TRAFFIC SIGN	HABROUGH ROAD	IMMINGHAM	517561.33	414309.76			65597			6 Watts			
Y	11	TRAFFIC SIGN	HABROUGH ROAD	IMMINGHAM	516988.17	414273.93			65600			11 Watts			
Y	12	TRAFFIC SIGN	HABROUGH ROAD	IMMINGHAM	516985.03	414274.12			65601			11 Watts			
Y	2	TRAFFIC SIGN	HABROUGH ROAD	IMMINGHAM					67160			6 Watts			
Y	3	TRAFFIC SIGN	HABROUGH ROAD	IMMINGHAM					67161			6 Watts			
Y	4	TRAFFIC SIGN	HABROUGH ROAD	IMMINGHAM					67162			6 Watts			
Y	4A	TRAFFIC SIGN	HABROUGH ROAD	IMMINGHAM					67164						
Y	5	TRAFFIC SIGN	HABROUGH ROAD	IMMINGHAM					67163			6 Watts			
Y	5A	TRAFFIC SIGN	HABROUGH ROAD	IMMINGHAM					67165						
Y	6	TRAFFIC SIGN	HABROUGH ROAD	IMMINGHAM	517570.08	414317.44			65596			7 Watts			
Y	7	TRAFFIC SIGN	HABROUGH ROAD	IMMINGHAM	517569.26	414309.89			65599			11 Watts			
Y	8	TRAFFIC SIGN	HABROUGH ROAD	IMMINGHAM	517567.72	414310			65598			4 Watts			
Y	9	TRAFFIC SIGN	HABROUGH ROAD	IMMINGHAM	517560.89	414316.98			65595			11 Watts			
Y	1	TRAFFIC SIGN	KILLINGHOLME ROAD	HABROUGH	515466.35	414349			65387			4 Watts			
Y	2	TRAFFIC SIGN	KILLINGHOLME ROAD	HABROUGH	515464	414376			65388			6 Watts			
Y	2A	TRAFFIC SIGN	KILLINGHOLME ROAD	HABROUGH	515464	414376			65390						
Y	3	TRAFFIC SIGN	KILLINGHOLME ROAD	HABROUGH	515455	414429			65389			4 Watts			
Y	3A	TRAFFIC SIGN	KILLINGHOLME ROAD	HABROUGH	515455	414429			65391						
Y	1	TRAFFIC SIGN	RIBY ROAD	STALLINGBOROUGH	519477.43	411270			66151			3 Watts			
Y	1	TRAFFIC SIGN	IMMINGHAM ROAD	HABROUGH	515474.73	414331.14			65372			4 Watts			
Y	2	TRAFFIC SIGN	IMMINGHAM ROAD	HABROUGH	515476.26	414339.2			65373			6 Watts			
Y	3	TRAFFIC SIGN	IMMINGHAM ROAD	HABROUGH	515522.27	414335.63			65374			6 Watts			
Y	4	TRAFFIC SIGN	IMMINGHAM ROAD	HABROUGH	515534.53	414325.63			65375			6 Watts			
Y	4A	TRAFFIC SIGN	IMMINGHAM ROAD	HABROUGH	515534.53	414325.63			65381						
Y	5	TRAFFIC SIGN	IMMINGHAM ROAD	HABROUGH	515636.84	414325.11			65376			11 Watts			
Y	5A	TRAFFIC SIGN	IMMINGHAM ROAD	HABROUGH	515631.93	414330.89			65382						
Y	5B	TRAFFIC SIGN	IMMINGHAM ROAD	HABROUGH	515631.93	414330.89			65383						
Y	6	TRAFFIC SIGN	IMMINGHAM ROAD	HABROUGH	515680.05	414344.02			65377			4 Watts			
Y	6A	TRAFFIC SIGN	IMMINGHAM ROAD	HABROUGH	515680.05	414344.02			65384						
Y	7	TRAFFIC SIGN	IMMINGHAM ROAD	HABROUGH	515920.42	414415.55			65378			6 Watts			
Y	7A	TRAFFIC SIGN	IMMINGHAM ROAD	HABROUGH	515920.42	414415.55			65385						
Y	8	TRAFFIC SIGN	IMMINGHAM ROAD	HABROUGH	516011.83	414405.37			65379			6 Watts			
Y	1	TRAFFIC SIGN	BROCKLESBY AVENUE	IMMINGHAM	516997.72	414281.72			65587			11 Watts			
Y	2	TRAFFIC SIGN	BROCKLESBY AVENUE	IMMINGHAM	516998.88	414284.9			65588			49 Watts			
Y	3	TRAFFIC SIGN	BROCKLESBY AVENUE	IMMINGHAM	517006.27	414283.32			65589			7 Watts			
Y	4	TRAFFIC SIGN	BROCKLESBY AVENUE	IMMINGHAM	516999.42	414285.93			65590			11 Watts			
Y	1	TRAFFIC SIGN	HOBSON WAY	STALLINGBOROUGH	521745.76	414336			66105			11 Watts			
Y	2	TRAFFIC SIGN	HOBSON WAY	STALLINGBOROUGH	521758.17	414316			66106			6 Watts			
Y	3	TRAFFIC SIGN	HOBSON WAY	STALLINGBOROUGH	521826.85	414223			66107			4 Watts			
Y	4	TRAFFIC SIGN	HOBSON WAY	STALLINGBOROUGH	522131.6	413790			66108			11 Watts			
Y	5	TRAFFIC SIGN	HOBSON WAY	STALLINGBOROUGH	522336.4	413541			66109			3 Watts			
Y	6	TRAFFIC SIGN	HOBSON WAY	STALLINGBOROUGH	522595.11	413310			66110			6 Watts			
Y	1	TRAFFIC SIGN	LAPORTE ROAD	STALLINGBOROUGH	521713.92	414377			66133			11 Watts			
Y	2	TRAFFIC SIGN	LAPORTE ROAD	STALLINGBOROUGH	521701.27	414405			66134			11 Watts			
Y	3	TRAFFIC SIGN	LAPORTE ROAD	STALLINGBOROUGH	521673.49	414469			66135			6 Watts			
Y	1	TRAFFIC SIGN	NORTH MOSS LANE	STALLINGBOROUGH	520595.53	413595			66144			3 Watts			
Y	1	TRAFFIC SIGN	SOUTH MARSH ROAD	STALLINGBOROUGH	520810	412113			66171			6 Watts			
Y	10	TRAFFIC SIGN	SOUTH MARSH ROAD	STALLINGBOROUGH	522470.78	413432			66179			11 Watts			
Y	11	TRAFFIC SIGN	SOUTH MARSH ROAD	STALLINGBOROUGH	522497.49	413435			66181						
Y	12	TRAFFIC SIGN	SOUTH MARSH ROAD	STALLINGBOROUGH	522504.11	413444			66183			11 Watts			
Y	13	TRAFFIC SIGN	SOUTH MARSH ROAD	STALLINGBOROUGH	522504.11	413444			66184			11 Watts			
Y	14	TRAFFIC SIGN	SOUTH MARSH ROAD	STALLINGBOROUGH	522497.85	413415			66185			6 Watts			
Y	15	TRAFFIC SIGN	SOUTH MARSH ROAD	STALLINGBOROUGH	522500.1	413418			66186			11 Watts			
Y	16	TRAFFIC SIGN	SOUTH MARSH ROAD	STALLINGBOROUGH	522504.82	413428			66187			3 Watts			
Y	17	TRAFFIC SIGN	SOUTH MARSH ROAD	STALLINGBOROUGH	522514.99	413403			66188			3 Watts			
Y	18	TRAFFIC SIGN	SOUTH MARSH ROAD	STALLINGBOROUGH	522602.77	413448			66189			11 Watts			
Y	18A	TRAFFIC SIGN	SOUTH MARSH ROAD	STALLINGBOROUGH	522602.77	413448			66190						
Y	1A	TRAFFIC SIGN	SOUTH MARSH ROAD	STALLINGBOROUGH	520810.01	412113.01			67197						
Y	2	TRAFFIC SIGN	SOUTH MARSH ROAD	STALLINGBOROUGH	520824	412148			66172			11 Watts			
Y	3	TRAFFIC SIGN	SOUTH MARSH ROAD	STALLINGBOROUGH	520860	412207			66173			3 Watts			

Y	4	TRAFFIC SIGN	SOUTH MARSH ROAD	STALLINGBOROUGH	520871	412202			66174			6 Watts			
Y	5	TRAFFIC SIGN	SOUTH MARSH ROAD	STALLINGBOROUGH	520860	412207			66175			3 Watts			
Y	6	TRAFFIC SIGN	SOUTH MARSH ROAD	STALLINGBOROUGH	520871	412202			66176			11 Watts			
Y	7	TRAFFIC SIGN	SOUTH MARSH ROAD	STALLINGBOROUGH	520922	412285			66177			11 Watts			
Y	8	TRAFFIC SIGN	SOUTH MARSH ROAD	STALLINGBOROUGH	522311.61	413417			66180			7 Watts			
Y	8A	TRAFFIC SIGN	SOUTH MARSH ROAD	STALLINGBOROUGH	522311.61	413417			66182						
Y	9	TRAFFIC SIGN	SOUTH MARSH ROAD	STALLINGBOROUGH	522403.02	413457			66178			11 Watts			
Y	3	TRAFFIC SIGN	KILN LANE	STALLINGBOROUGH	520599.51	413640			66125			3 Watts			
Y	4	TRAFFIC SIGN	KILN LANE	STALLINGBOROUGH	521216.57	414078			66126			4 Watts			
Y	5	TRAFFIC SIGN	KILN LANE	STALLINGBOROUGH	521386.55	414216			66127			4 Watts			
Y	6	TRAFFIC SIGN	KILN LANE	STALLINGBOROUGH	521603.8	414317			66128			3 Watts			
Y	7N	TRAFFIC SIGN	KILN LANE	STALLINGBOROUGH					68152						
Y	8N	TRAFFIC SIGN	KILN LANE	STALLINGBOROUGH					68151						
Y	1	TRAFFIC SIGN	EUROPARC WAY	HEALING	523478	411500			65414			11 Watts			
Y	2	TRAFFIC SIGN	EUROPARC WAY	HEALING	523477	411491			65415			4 Watts			
Y	3	TRAFFIC SIGN	EUROPARC WAY	HEALING	523473	411478			65416			4 Watts			
Y	5	TRAFFIC SIGN	EUROPARC WAY	HEALING	523568	411473			65418			6 Watts			
Y	6	TRAFFIC SIGN	EUROPARC WAY	HEALING	523566	411461			65419			4 Watts			
Y	7	TRAFFIC SIGN	EUROPARC WAY	HEALING	523566	411457			65420			4 Watts			
Y	1X	TRAFFIC SIGN	EUROPARC ROUNDABOUT	HEALING	523425.02	411479.61			65397			6 Watts			
Y	1XA	TRAFFIC SIGN	EUROPARC ROUNDABOUT	HEALING	523424.25	411479.14			69139						
Y	2X	TRAFFIC SIGN	EUROPARC ROUNDABOUT	HEALING	523462.19	411486.37			69013			4 Watts			
Y	2XA	TRAFFIC SIGN	EUROPARC ROUNDABOUT	HEALING	523462.19	411486.37			69140						
Y	3X	TRAFFIC SIGN	EUROPARC ROUNDABOUT	HEALING	523413.67	411502.64			65398			4 Watts			
Y	3XA	TRAFFIC SIGN	EUROPARC ROUNDABOUT	HEALING	523413.67	411502.64			69141						
Y	1	TRAFFIC SIGN	LAKESIDE ROUNDABOUT	EUROPARC	523580	411461			65472			6 Watts			
Y	1A	TRAFFIC SIGN	LAKESIDE ROUNDABOUT	EUROPARC	523580	411461			65475						
Y	2	TRAFFIC SIGN	LAKESIDE ROUNDABOUT	EUROPARC	523606	411466			65473			4 Watts			
Y	2A	TRAFFIC SIGN	LAKESIDE ROUNDABOUT	EUROPARC	523606	411466			65476						
Y	3	TRAFFIC SIGN	LAKESIDE ROUNDABOUT	EUROPARC	523598	411441			65474			4 Watts			
Y	3A	TRAFFIC SIGN	LAKESIDE ROUNDABOUT	EUROPARC	523598	411441			65477						
Y	1X	TRAFFIC SIGN	GREAT COATES LINK ROUNDABOUT	HEALING	523312.05	411050			65455			4 Watts			
Y	1XA	TRAFFIC SIGN	GREAT COATES LINK ROUNDABOUT	HEALING	523312.05	411050			65458						
Y	2X	TRAFFIC SIGN	GREAT COATES LINK ROUNDABOUT	HEALING	523316.3	411070			65456			4 Watts			
Y	2XA	TRAFFIC SIGN	GREAT COATES LINK ROUNDABOUT	HEALING	523316.3	411070			65459						
Y	3X	TRAFFIC SIGN	GREAT COATES LINK ROUNDABOUT	HEALING	523324.81	411066			65457			4 Watts			
Y	3XA	TRAFFIC SIGN	GREAT COATES LINK ROUNDABOUT	HEALING	523324.81	411066			65460						
Y	1	TRAFFIC SIGN	EUROPARC LINK	HEALING	523353	411288			65399			4 Watts			
Y	10	TRAFFIC SIGN	EUROPARC LINK	HEALING	523410	411438			65408			4 Watts			
Y	10A	TRAFFIC SIGN	EUROPARC LINK	HEALING	523410	411438			65412						
Y	11	TRAFFIC SIGN	EUROPARC LINK	HEALING	523427	411430			65409			4 Watts			
Y	11A	TRAFFIC SIGN	EUROPARC LINK	HEALING	523427	411430			65413						
Y	12	TRAFFIC SIGN	EUROPARC LINK	HEALING	523423	411442			65410			11 Watts			
Y	13	TRAFFIC SIGN	EUROPARC LINK	HEALING	523444	411462			65411			11 Watts			
Y	2	TRAFFIC SIGN	EUROPARC LINK	HEALING	523360	411300			65400			6 Watts			
Y	3	TRAFFIC SIGN	EUROPARC LINK	HEALING	523372	411313			65401			11 Watts			
Y	4	TRAFFIC SIGN	EUROPARC LINK	HEALING	523402	411420			65402			4 Watts			
Y	5	TRAFFIC SIGN	EUROPARC LINK	HEALING	523418	411413			65403			4 Watts			
Y	6	TRAFFIC SIGN	EUROPARC LINK	HEALING	523402	411420			65404			4 Watts			
Y	7	TRAFFIC SIGN	EUROPARC LINK	HEALING	523418	411413			65405			4 Watts			
Y	8	TRAFFIC SIGN	EUROPARC LINK	HEALING	523410	411438			65406			4 Watts			
Y	9	TRAFFIC SIGN	EUROPARC LINK	HEALING	523427	411430			65407			4 Watts			
Y	1	TRAFFIC SIGN	GENESIS WAY	HEALING	523608	411481			65421			11 Watts			
Y	2	TRAFFIC SIGN	GENESIS WAY	HEALING	523614	411484			65422			6 Watts			
Y	3	TRAFFIC SIGN	GENESIS WAY	HEALING	523640	411498			65423			4 Watts			
Y	1	TRAFFIC SIGN	LAKESIDE	HEALING	523611	411433			65469			11 Watts			
Y	2	TRAFFIC SIGN	LAKESIDE	HEALING	523611	411425			65470			11 Watts			
Y	3	TRAFFIC SIGN	LAKESIDE	HEALING	523614	411395			65471			4 Watts			
Y	1	TRAFFIC SIGN	PEGASUS WAY	HEALING	523746.25	411556.71			65485			11 Watts			
Y	1	TRAFFIC SIGN	GREAT COATES ROAD	HEALING	521718.95	410071			65461			6 Watts			
Y	1A	TRAFFIC SIGN	GREAT COATES ROAD	HEALING	521718.95	410071			65464						
Y	2	TRAFFIC SIGN	GREAT COATES ROAD	HEALING	521763.55	410007			65462			11 Watts			
Y	2A	TRAFFIC SIGN	GREAT COATES ROAD	HEALING	521763.55	410007			65465						
Y	3	TRAFFIC SIGN	GREAT COATES ROAD	HEALING					68612			4 Watts			
Y	4	TRAFFIC SIGN	GREAT COATES ROAD	HEALING					68613			11 Watts			
Y	5	TRAFFIC SIGN	GREAT COATES ROAD	HEALING					68614			11 Watts			
Y	6	TRAFFIC SIGN	GREAT COATES ROAD	HEALING	522866.73	409993			65463			11 Watts			
Y	1	TRAFFIC SIGN	CHURCH LANE	STALLINGBOROUGH	519804.07	411409			66103			11 Watts			
Y	1	TRAFFIC SIGN	LOW ROAD	HEALING	521617.11	410235.38			65478			3 Watts			
Y	2N	TRAFFIC SIGN	LOW ROAD	HEALING	521607.09	410227			65479			4 Watts			
Y	3N	TRAFFIC SIGN	LOW ROAD	HEALING					68841						
Y	1	TRAFFIC SIGN	STALLINGBOROUGH ROAD	HEALING	521433.34	410211			65486			3 Watts			
Y	1A	TRAFFIC SIGN	STALLINGBOROUGH ROAD	HEALING	521433.34	410211			65490						
Y	2	TRAFFIC SIGN	STALLINGBOROUGH ROAD	HEALING	521436.74	410223			65487			3 Watts			
Y	2A	TRAFFIC SIGN	STALLINGBOROUGH ROAD	HEALING	521436.74	410223			65491						
Y	3	TRAFFIC SIGN	STALLINGBOROUGH ROAD	HEALING	521109.3	410314			65488			6 Watts			
Y	4	TRAFFIC SIGN	STALLINGBOROUGH ROAD	HEALING	520970.53	410436			65489			4 Watts			
Y	5	TRAFFIC SIGN	STALLINGBOROUGH ROAD	HEALING	520925.36	410483.58			66450			11 Watts			
Y	6	TRAFFIC SIGN	STALLINGBOROUGH ROAD	HEALING	520924.83	410484.45			66449			36 Watts			
Y	7N	TRAFFIC SIGN	STALLINGBOROUGH ROAD	HEALING					68293						
Y	1	TRAFFIC SIGN	STATION ROAD	STALLINGBOROUGH	519533.19	411385.42			66193			11 Watts			
Y	10	TRAFFIC SIGN	STATION ROAD	STALLINGBOROUGH	519630	411390			66204			6 Watts			
Y	11	TRAFFIC SIGN	STATION ROAD	STALLINGBOROUGH	519669	411371			66205			6 Watts			
Y	12	TRAFFIC SIGN	STATION ROAD	STALLINGBOROUGH	519907.14	411396.32			66206			3 Watts			
Y	13	TRAFFIC SIGN	STATION ROAD	STALLINGBOROUGH	520017.12	411428.74			66207			11 Watts			
Y	13A	TRAFFIC SIGN	STATION ROAD	STALLINGBOROUGH	520017.12	411428.74			66208						
Y	14	TRAFFIC SIGN	STATION ROAD	STALLINGBOROUGH	520196.84	411471.23			66209			11 Watts			
Y	15	TRAFFIC SIGN	STATION ROAD	STALLINGBOROUGH					67203			11 Watts			
Y	15A	TRAFFIC SIGN	STATION ROAD	STALLINGBOROUGH					67200						
Y	16	TRAFFIC SIGN	STATION ROAD	STALLINGBOROUGH	520218.3	411496.98			66211			4 Watts			
Y	16A	TRAFFIC SIGN	STATION ROAD	STALLINGBOROUGH					67202						
Y	17	TRAFFIC SIGN	STATION ROAD	STALLINGBOROUGH					66215			11 Watts			
Y	18	TRAFFIC SIGN	STATION ROAD	STALLINGBOROUGH	520339.31	411628.94			66213			4,700 Watts			
Y	19	TRAFFIC SIGN	STATION ROAD	STALLINGBOROUGH	520398.62	411672.01			66214			11 Watts			
Y	19A	TRAFFIC SIGN	STATION ROAD	STALLINGBOROUGH	520398.62	411672.01			67198						
Y	1A	TRAFFIC SIGN	STATION ROAD	STALLINGBOROUGH	519533.19	411385.42			66194						
Y	2	TRAFFIC SIGN	STATION ROAD	STALLINGBOROUGH	519536.24	411377.26			66195			11 Watts			
Y	20	TRAFFIC SIGN	STATION ROAD	STALLINGBOROUGH	520476.88	411739.63			67199			6 Watts			
Y	20A	TRAFFIC SIGN	STATION ROAD	STALLINGBOROUGH	520476.88	411739.63			66210						
Y	21	TRAFFIC SIGN	STATION ROAD	STALLINGBOROUGH	520476.88	411739.63			67201			4,700 Watts			
Y	22	TRAFFIC SIGN	STATION ROAD	STALLINGBOROUGH	520714.56	411975.34			66217			11 Watts			
Y	22A	TRAFFIC SIGN	STATION ROAD	STALLINGBOROUGH	520714.56	411975.34			67196						
Y	2A	TRAFFIC SIGN	STATION ROAD	STALLINGBOROUGH	519536.24	411377.26			66196						
Y	3	TRAFFIC SIGN	STATION ROAD	STALLINGBOROUGH	519547.11	411379.05			66197			11 Watts			
Y	4	TRAFFIC SIGN	STATION ROAD	STALLINGBOROUGH	519554.79	411373.45			66198			11 Watts			
Y	5	TRAFFIC SIGN	STATION ROAD	STALLINGBOROUGH	519546.34	411378			66199			3 Watts			
Y	6	TRAFFIC SIGN	STATION ROAD	STALLINGBOROUGH	519589	411398			66200			11 Watts			
Y	7	TRAFFIC SIGN	STATION ROAD	STALLINGBOROUGH	519630	411390			66201			6 Watts			
Y	8	TRAFFIC SIGN	STATION ROAD	STALLINGBOROUGH	519628.81	411382.37			66202			11 Watts			
Y	9	TRAFFIC SIGN	STATION ROAD	STALLINGBOROUGH	519628.81	411382.37			66203			11 Watts			

Y	1	TRAFFIC SIGN	HEALING ROAD	STALLINGBOROUGH	519816.06	411385.89			66104			4 Watts			
Y	1	TRAFFIC SIGN	WELLS ROAD	HEALING	521019.59	410343			65492			4 Watts			
Y	2	TRAFFIC SIGN	WELLS ROAD	HEALING	521019.59	410343			65493			4 Watts			
Y	2A	TRAFFIC SIGN	WELLS ROAD	HEALING	521019.59	410343			65494						
Y	1	TRAFFIC SIGN	KEELBY ROAD	STALLINGBOROUGH	518674.16	412035.74			66118			3 Watts			
Y	1A	TRAFFIC SIGN	KEELBY ROAD	STALLINGBOROUGH	518674.16	412035.74			66119						
Y	2	TRAFFIC SIGN	KEELBY ROAD	STALLINGBOROUGH	518667.43	412046.67			66120			3 Watts			
Y	2A	TRAFFIC SIGN	KEELBY ROAD	STALLINGBOROUGH	518667.43	412046.67			66121						
Y	3	TRAFFIC SIGN	KEELBY ROAD	STALLINGBOROUGH	518674.16	412035.74			66122			3 Watts			
Y	4	TRAFFIC SIGN	KEELBY ROAD	STALLINGBOROUGH	518667.43	412046.67			66123			3 Watts			
Y	4A	TRAFFIC SIGN	KEELBY ROAD	STALLINGBOROUGH	518667.43	412046.67			66124						
Y	1	TRAFFIC SIGN	LOW ROAD MINI ROUNDABOUT	HEALING	521462.07	410412.19			65481			4 Watts			
Y	2	TRAFFIC SIGN	LOW ROAD MINI ROUNDABOUT	HEALING	521451.37	410420.27			65482			11 Watts			
Y	3	TRAFFIC SIGN	LOW ROAD MINI ROUNDABOUT	HEALING	521455.69	410433.02			65483			4 Watts			
Y	4	TRAFFIC SIGN	LOW ROAD MINI ROUNDABOUT	HEALING	521472.17	410426.02			65484			4 Watts			
Y	1	TRAFFIC SIGN	AYLESBY ROAD	AYLESBY	520803.95	407578.74			63035			3 Watts			
Y	1	TRAFFIC SIGN	BUTT LANE	LACEBY	521392.29	407257.54			67024			6 Watts			
Y	10	TRAFFIC SIGN	BUTT LANE	LACEBY	520864.08	407222.72			65768						
Y	11	TRAFFIC SIGN	BUTT LANE	LACEBY	520862.53	407224.17			65769						
Y	12	TRAFFIC SIGN	BUTT LANE	LACEBY	520856.83	407238.98			65767			4 Watts			
Y	13	TRAFFIC SIGN	BUTT LANE	LACEBY	520780.59	407562.11			65770			3 Watts			
Y	2N	TRAFFIC SIGN	BUTT LANE	LACEBY	521398.72	407258.31			67027						
Y	3N	TRAFFIC SIGN	BUTT LANE	LACEBY	521400.21	407261.28			67028						
Y	4	TRAFFIC SIGN	BUTT LANE	LACEBY	521393.63	407276.62			67029			4 Watts			
Y	5	TRAFFIC SIGN	BUTT LANE	LACEBY	521391.16	407279.38			67030			4 Watts			
Y	6	TRAFFIC SIGN	BUTT LANE	LACEBY	521394.91	407285.17			67025			6 Watts			
Y	7	TRAFFIC SIGN	BUTT LANE	LACEBY	520893.44	407221.35			65766			4 Watts			
Y	8N	TRAFFIC SIGN	BUTT LANE	LACEBY	520883.51	407220.39			69956						
Y	9N	TRAFFIC SIGN	BUTT LANE	LACEBY	520881.85	407219.46			69957						
Y	1	TRAFFIC SIGN	CAISTOR ROAD	LACEBY	521116.48	406199			65771			4 Watts			
Y	10	TRAFFIC SIGN	CAISTOR ROAD	LACEBY	521100.99	406140.81			65790			4 Watts			
Y	11	TRAFFIC SIGN	CAISTOR ROAD	LACEBY	521004.41	406092			65791			11 Watts			
Y	12	TRAFFIC SIGN	CAISTOR ROAD	LACEBY	520993.3	406084			65792			11 Watts			
Y	13	TRAFFIC SIGN	CAISTOR ROAD	LACEBY	521004.41	406092			65793			11 Watts			
Y	13A	TRAFFIC SIGN	CAISTOR ROAD	LACEBY	521004.41	406092			65794						
Y	13B	TRAFFIC SIGN	CAISTOR ROAD	LACEBY	521004.41	406092			65795						
Y	14	TRAFFIC SIGN	CAISTOR ROAD	LACEBY	520993.3	406084			65796			11 Watts			
Y	14A	TRAFFIC SIGN	CAISTOR ROAD	LACEBY	520993.3	406084			65797						
Y	14B	TRAFFIC SIGN	CAISTOR ROAD	LACEBY	520993.3	406084			65798						
Y	1A	TRAFFIC SIGN	CAISTOR ROAD	LACEBY	521116.48	406199			65772						
Y	2	TRAFFIC SIGN	CAISTOR ROAD	LACEBY	521109.08	406208			65773			11 Watts			
Y	2A	TRAFFIC SIGN	CAISTOR ROAD	LACEBY	521109.08	406208			65774						
Y	3	TRAFFIC SIGN	CAISTOR ROAD	LACEBY	521103.88	406152.96			65775			4 Watts			
Y	3A	TRAFFIC SIGN	CAISTOR ROAD	LACEBY	521103.88	406152.96			65776						
Y	4	TRAFFIC SIGN	CAISTOR ROAD	LACEBY	521090.07	406146.02			65777			4 Watts			
Y	4A	TRAFFIC SIGN	CAISTOR ROAD	LACEBY	521090.07	406146.02			65778						
Y	5	TRAFFIC SIGN	CAISTOR ROAD	LACEBY	521103.88	406152.96			65779			4 Watts			
Y	5A	TRAFFIC SIGN	CAISTOR ROAD	LACEBY	521103.88	406152.96			65780						
Y	5B	TRAFFIC SIGN	CAISTOR ROAD	LACEBY	521103.88	406152.96			65781						
Y	6	TRAFFIC SIGN	CAISTOR ROAD	LACEBY	521090.07	406146.02			65782			4 Watts			
Y	6A	TRAFFIC SIGN	CAISTOR ROAD	LACEBY	521090.07	406146.02			65783						
Y	6B	TRAFFIC SIGN	CAISTOR ROAD	LACEBY	521090.07	406146.02			65784						
Y	7	TRAFFIC SIGN	CAISTOR ROAD	LACEBY	521090.69	406140			65785			4 Watts			
Y	7A	TRAFFIC SIGN	CAISTOR ROAD	LACEBY	521090.69	406140			65786						
Y	8	TRAFFIC SIGN	CAISTOR ROAD	LACEBY	521104.61	406147			65787			4 Watts			
Y	8A	TRAFFIC SIGN	CAISTOR ROAD	LACEBY	521104.61	406147			65788						
Y	9	TRAFFIC SIGN	CAISTOR ROAD	LACEBY	521099.7	406143.32			65789						
Y	1	TRAFFIC SIGN	GRIMSBY ROAD	LACEBY	521486	406481			65812			11 Watts			
Y	10	TRAFFIC SIGN	GRIMSBY ROAD	LACEBY	522088.06	406548.14			65826			11 Watts			
Y	11	TRAFFIC SIGN	GRIMSBY ROAD	LACEBY	522090.96	406541.68			65827						
Y	12	TRAFFIC SIGN	GRIMSBY ROAD	LACEBY	522096.94	406549.65			65828			3 Watts			
Y	2	TRAFFIC SIGN	GRIMSBY ROAD	LACEBY	521450.7	406480			65813			6 Watts			
Y	3	TRAFFIC SIGN	GRIMSBY ROAD	LACEBY	521486	406481			65814			7 Watts			
Y	3A	TRAFFIC SIGN	GRIMSBY ROAD	LACEBY	521486	406481			65815						
Y	4	TRAFFIC SIGN	GRIMSBY ROAD	LACEBY	521450.7	406480			65816			4 Watts			
Y	4A	TRAFFIC SIGN	GRIMSBY ROAD	LACEBY	521450.7	406480			65817						
Y	6	TRAFFIC SIGN	GRIMSBY ROAD	LACEBY	522073.89	406558			65818			11 Watts			
Y	6A	TRAFFIC SIGN	GRIMSBY ROAD	LACEBY	522073.89	406558			65819						
Y	7	TRAFFIC SIGN	GRIMSBY ROAD	LACEBY	522074.12	406547			65820			7 Watts			
Y	7A	TRAFFIC SIGN	GRIMSBY ROAD	LACEBY	522074.12	406547			65821						
Y	8	TRAFFIC SIGN	GRIMSBY ROAD	LACEBY	522073.89	406558			65822			11 Watts			
Y	9	TRAFFIC SIGN	GRIMSBY ROAD	LACEBY	522074.12	406547			65823			11 Watts			
Y	9A	TRAFFIC SIGN	GRIMSBY ROAD	LACEBY	522074.12	406547			65824						
Y	9B	TRAFFIC SIGN	GRIMSBY ROAD	LACEBY	522074.12	406547			65825						
Y	1X	TRAFFIC SIGN	COTTAGERS PLOT ROUNDABOUT	LACEBY	523315.74	407445.09			65867			3 Watts			
Y	2X	TRAFFIC SIGN	COTTAGERS PLOT ROUNDABOUT	LACEBY	523324.25	407429.67			65868			3 Watts			
Y	3X	TRAFFIC SIGN	COTTAGERS PLOT ROUNDABOUT	LACEBY	523313.26	407423.27			65869			3 Watts			
Y	4X	TRAFFIC SIGN	COTTAGERS PLOT ROUNDABOUT	LACEBY	523303.08	407436.07			65870			3 Watts			
Y	1	TRAFFIC SIGN	BLYTH WAY	LACEBY	520874.13	407202.78			65761			4 Watts			
Y	2N	TRAFFIC SIGN	BLYTH WAY	LACEBY	520880.81	407202.88			69954						
Y	3N	TRAFFIC SIGN	BLYTH WAY	LACEBY	520882.93	407197.81			69955						
Y	1	TRAFFIC SIGN	MAIN ROAD	AYLESBY	520779.99	407582.43			63036			3 Watts			
Y	1	TRAFFIC SIGN	BARTON STREET	LACEBY	520720.64	405835			65755			11 Watts			
Y	2	TRAFFIC SIGN	BARTON STREET	LACEBY	520724.12	405826			65756			11 Watts			
Y	3	TRAFFIC SIGN	BARTON STREET	LACEBY	520721.89	405815.08			65757			3 Watts			
Y	3A	TRAFFIC SIGN	BARTON STREET	LACEBY	520721.89	405815.08			65760						
Y	4	TRAFFIC SIGN	BARTON STREET	LACEBY	520744.13	405819.72			65758			3 Watts			
Y	4A	TRAFFIC SIGN	BARTON STREET	LACEBY	520744.13	405819.72			65759						
Y	1N	TRAFFIC SIGN	A46 FROM IRBY UPON HUMBER TO	IRBY UPON HUMBER	520669.95	405837.51			67867						
Y	2N	TRAFFIC SIGN	A46 FROM IRBY UPON HUMBER TO	IRBY UPON HUMBER	520656.19	405839.49			68223						
Y	3N	TRAFFIC SIGN	A46 FROM IRBY UPON HUMBER TO	IRBY UPON HUMBER	520600.23	405824.47			68596						
Y	4N	TRAFFIC SIGN	A46 FROM IRBY UPON HUMBER TO	IRBY UPON HUMBER	520591.98	405821.51			68597						
Y	5N	TRAFFIC SIGN	A46 FROM IRBY UPON HUMBER TO	IRBY UPON HUMBER	520584.66	405818.62			68598						
Y	1N	TRAFFIC SIGN	BARTON STREET	HATCLIFFE	524187.31	400630.61			69952						
Y	2N	TRAFFIC SIGN	BARTON STREET	HATCLIFFE	524185.66	400633.22			69953						
Y	1N	TRAFFIC SIGN	BARTON STREET	ASHBY CUM FENBY	524211.08	400608.63			69948						
Y	2N	TRAFFIC SIGN	BARTON STREET	ASHBY CUM FENBY	524212.17	400605.58			69949						
Y	1	TRAFFIC SIGN	ARCHER ROAD	WALTHAM	525616	403732			66218			7 Watts			
Y	2N	TRAFFIC SIGN	ARCHER ROAD	WALTHAM					68617						
Y	3N	TRAFFIC SIGN	ARCHER ROAD	WALTHAM					68618						
Y	1	TRAFFIC SIGN	BARNOLDBY ROAD	WALTHAM	525866.49	403801			66221			4 Watts			
Y	10	TRAFFIC SIGN	BARNOLDBY ROAD	WALTHAM	525627	403720			66230			7 Watts			
Y	11	TRAFFIC SIGN	BARNOLDBY ROAD	WALTHAM	525613	403715			66231			6 Watts			
Y	12N	TRAFFIC SIGN	BARNOLDBY ROAD	WALTHAM	525606	403718			66232						
Y	13N	TRAFFIC SIGN	BARNOLDBY ROAD	WALTHAM	525605	403721			66233						
Y	14N	TRAFFIC SIGN	BARNOLDBY ROAD	WALTHAM	525603	403718			66234						
Y	15	TRAFFIC SIGN	BARNOLDBY ROAD	WALTHAM	525601	403725			66235			7 Watts			
Y	16	TRAFFIC SIGN	BARNOLDBY ROAD	WALTHAM	525558	403704			66236			7 Watts			
Y	17N	TRAFFIC SIGN	BARNOLDBY ROAD	WALTHAM	525012.14	403501			66237						
Y	18	TRAFFIC SIGN	BARNOLDBY ROAD	WALTHAM	525009.9	403494			66238			4 Watts			

Y	19N	TRAFFIC SIGN	BARNOLDBY ROAD	WALTHAM	525008.01	403500			66239						
Y	2	TRAFFIC SIGN	BARNOLDBY ROAD	WALTHAM	525819	403788			66222			6,019 Watts			
Y	3	TRAFFIC SIGN	BARNOLDBY ROAD	WALTHAM	525819	403788			66223			28 Watts			
Y	4	TRAFFIC SIGN	BARNOLDBY ROAD	WALTHAM	525813	403794			66224			3 Watts			
Y	5	TRAFFIC SIGN	BARNOLDBY ROAD	WALTHAM	525813	403794			66225			28 Watts			
Y	6	TRAFFIC SIGN	BARNOLDBY ROAD	WALTHAM	525794.72	403787			66226			11 Watts			
Y	7	TRAFFIC SIGN	BARNOLDBY ROAD	WALTHAM	525674	403734			66227			7 Watts			
Y	8N	TRAFFIC SIGN	BARNOLDBY ROAD	WALTHAM	525631	403725			66228						
Y	9N	TRAFFIC SIGN	BARNOLDBY ROAD	WALTHAM	525627	403725			66229						
Y	1	TRAFFIC SIGN	CHEAPSIDE	WALTHAM	525890.78	403758			66250			3 Watts			
Y	2	TRAFFIC SIGN	CHEAPSIDE	WALTHAM	525891.27	403748			66251			4 Watts			
Y	3	TRAFFIC SIGN	CHEAPSIDE	WALTHAM	525895.96	403758			66252			3 Watts			
Y	1	TRAFFIC SIGN	CHURCH LANE	BRADLEY					69999			3 Watts			
Y	1A	TRAFFIC SIGN	CHURCH LANE	BRADLEY					70001						
Y	2	TRAFFIC SIGN	CHURCH LANE	BRADLEY					70000			3 Watts			
Y	1	TRAFFIC SIGN	FAIRWAY	WALTHAM	526011.42	403925			66253			11 Watts			
Y	2	TRAFFIC SIGN	FAIRWAY	WALTHAM	526011.16	403927			66254			11 Watts			
Y	3	TRAFFIC SIGN	FAIRWAY	WALTHAM	526017.1	403936			66255			4 Watts			
Y	4	TRAFFIC SIGN	FAIRWAY	WALTHAM	526502.03	404504			66256			7 Watts			
Y	1	TRAFFIC SIGN	KIRKGATE	WALTHAM	526084.73	403894			66271			3 Watts			
Y	2	TRAFFIC SIGN	KIRKGATE	WALTHAM	526033	403739			66272			7 Watts			
Y	1	TRAFFIC SIGN	MARIAN WAY	WALTHAM	524838.9	403947			66273			4 Watts			
Y	1	TRAFFIC SIGN	WALTHAM ROAD	BARNOLDBY LE BECK	524984.56	403491			63037			4 Watts			
Y	2	TRAFFIC SIGN	WALTHAM ROAD	BARNOLDBY LE BECK	524988.34	403492			63038			4 Watts			
Y	3	TRAFFIC SIGN	WALTHAM ROAD	BARNOLDBY LE BECK	524966.67	403488.11			63039			4 Watts			
Y	1N	TRAFFIC SIGN	GRIMSBY ROAD	WALTHAM	526467.54	404104			66257						
Y	2	TRAFFIC SIGN	GRIMSBY ROAD	WALTHAM	526465.27	404092			66258			11 Watts			
Y	3	TRAFFIC SIGN	GRIMSBY ROAD	WALTHAM	526470.38	404077			66259			11 Watts			
Y	1	TRAFFIC SIGN	HIGH STREET	WALTHAM					67016			3 Watts			
Y	10	TRAFFIC SIGN	HIGH STREET	WALTHAM	526170.17	403943.76			66267			3 Watts			
Y	11	TRAFFIC SIGN	HIGH STREET	WALTHAM	526170.17	403943.76			66268			61 Watts			
Y	12	TRAFFIC SIGN	HIGH STREET	WALTHAM	526269.77	403963			66269			4,000 Watts			
Y	13	TRAFFIC SIGN	HIGH STREET	WALTHAM					67015			3 Watts			
Y	14N	TRAFFIC SIGN	HIGH STREET	WALTHAM					68294						
Y	2	TRAFFIC SIGN	HIGH STREET	WALTHAM					67017			3 Watts			
Y	3	TRAFFIC SIGN	HIGH STREET	WALTHAM	525886.75	403801			66260			3 Watts			
Y	4N	TRAFFIC SIGN	HIGH STREET	WALTHAM	526043.34	403914			66261						
Y	5	TRAFFIC SIGN	HIGH STREET	WALTHAM	526044.19	403913.81			66262			49 Watts			
Y	6N	TRAFFIC SIGN	HIGH STREET	WALTHAM	526047.36	403913			66263						
Y	7	TRAFFIC SIGN	HIGH STREET	WALTHAM	526092.07	403914			66264			4,700 Watts			
Y	8	TRAFFIC SIGN	HIGH STREET	WALTHAM	526175.71	403936.25			66265			3 Watts			
Y	9	TRAFFIC SIGN	HIGH STREET	WALTHAM	526175.71	403936.25			66266			61 Watts			
Y	1	TRAFFIC SIGN	STATION ROAD	WALTHAM	526484.18	404079			66275			6 Watts			
Y	2N	TRAFFIC SIGN	STATION ROAD	WALTHAM	526489.29	404078			66274						
Y	1	TRAFFIC SIGN	BRIGSLEY ROAD	WALTHAM	525872.57	403783			66243			3 Watts			
Y	2	TRAFFIC SIGN	BRIGSLEY ROAD	WALTHAM	525879.21	403782			66244			3 Watts			
Y	3	TRAFFIC SIGN	BRIGSLEY ROAD	WALTHAM	525879.57	403778			66245			3 Watts			
Y	4	TRAFFIC SIGN	BRIGSLEY ROAD	WALTHAM	525889.14	403769			66246			4 Watts			
Y	5	TRAFFIC SIGN	BRIGSLEY ROAD	WALTHAM	525876.85	403748			66247			4 Watts			
Y	6	TRAFFIC SIGN	BRIGSLEY ROAD	WALTHAM	525846.76	403423			66248			4 Watts			
Y	7	TRAFFIC SIGN	BRIGSLEY ROAD	WALTHAM	525773.05	403336			66249			4 Watts			
Y	1N	TRAFFIC SIGN	BRADLEY ROAD	WALTHAM	524989	403511			66240						
Y	2N	TRAFFIC SIGN	BRADLEY ROAD	WALTHAM	524989	403514			66241						
Y	3	TRAFFIC SIGN	BRADLEY ROAD	WALTHAM	524988.84	403523			66242			11 Watts			
Y	1N	TRAFFIC SIGN	COTTAGERS PLOT	LACEBY	523324.7	407411			65799						
Y	2N	TRAFFIC SIGN	COTTAGERS PLOT	LACEBY	523326.12	407408			65800						
Y	3	TRAFFIC SIGN	COTTAGERS PLOT	LACEBY	523331.6	407407			65801			4 Watts			
Y	3A	TRAFFIC SIGN	COTTAGERS PLOT	LACEBY	523331.6	407407			65802						
Y	3B	TRAFFIC SIGN	COTTAGERS PLOT	LACEBY	523331.6	407407			65803						
Y	4	TRAFFIC SIGN	COTTAGERS PLOT	LACEBY	523323.18	407404			65804			4 Watts			
Y	4A	TRAFFIC SIGN	COTTAGERS PLOT	LACEBY	523323.18	407404			65805						
Y	4B	TRAFFIC SIGN	COTTAGERS PLOT	LACEBY	523323.18	407404			65806						
Y	5	TRAFFIC SIGN	COTTAGERS PLOT	LACEBY	523323.18	407404			65807			4 Watts			
Y	5A	TRAFFIC SIGN	COTTAGERS PLOT	LACEBY	523323.18	407404			65809						
Y	6	TRAFFIC SIGN	COTTAGERS PLOT	LACEBY	523331.6	407407			65810			4 Watts			
Y	6A	TRAFFIC SIGN	COTTAGERS PLOT	LACEBY	523331.6	407407			65811						
Y	1	TRAFFIC SIGN	ALBERY WAY	NEW WALTHAM	528122.08	404922.81			65871			4 Watts			
Y	1A	TRAFFIC SIGN	ALBERY WAY	NEW WALTHAM	528122.08	404922.81			65872						
Y	1	TRAFFIC SIGN	BARBICAN WAY	NEW WALTHAM	528177.46	404904.85			65873			4 Watts			
Y	1A	TRAFFIC SIGN	BARBICAN WAY	NEW WALTHAM	528177.46	404904.85			65874						
Y	1B	TRAFFIC SIGN	BARBICAN WAY	NEW WALTHAM	528177.46	404904.85			65875						
Y	1	TRAFFIC SIGN	CARDIFF AVENUE	NEW WALTHAM	528107.27	404638.62			65876			7 Watts			
Y	1	TRAFFIC SIGN	GARRICK LANE	NEW WALTHAM	528199.73	404954.66			65884			6 Watts			
Y	1A	TRAFFIC SIGN	GARRICK LANE	NEW WALTHAM	528199.73	404954.66			65885						
Y	1	TRAFFIC SIGN	HOLME AVENUE	NEW WALTHAM	528602.34	405002			66012			11 Watts			
Y	1N	TRAFFIC SIGN	MAPLE GROVE	NEW WALTHAM					68203						
Y	2N	TRAFFIC SIGN	MAPLE GROVE	NEW WALTHAM					68204						
Y	1	TRAFFIC SIGN	PEAKS LANE	NEW WALTHAM	528646.74	404833			65984			11 Watts			
Y	10	TRAFFIC SIGN	PEAKS LANE	NEW WALTHAM	528613.35	405012			66009			11 Watts			
Y	11	TRAFFIC SIGN	PEAKS LANE	NEW WALTHAM	528615.24	405002			66010			11 Watts			
Y	12	TRAFFIC SIGN	PEAKS LANE	NEW WALTHAM	528613.35	405012			66011			11 Watts			
Y	13	TRAFFIC SIGN	PEAKS LANE	NEW WALTHAM					66930			3 Watts			
Y	13A	TRAFFIC SIGN	PEAKS LANE	NEW WALTHAM					66932						
Y	14	TRAFFIC SIGN	PEAKS LANE	NEW WALTHAM	528616.23	404993.19			66934			4,700 Watts			
Y	15	TRAFFIC SIGN	PEAKS LANE	NEW WALTHAM	528621.55	405035			65987						
Y	16	TRAFFIC SIGN	PEAKS LANE	NEW WALTHAM	528621.67	405038			65988						
Y	17	TRAFFIC SIGN	PEAKS LANE	NEW WALTHAM	528589.97	405088			66015			4 Watts			
Y	18	TRAFFIC SIGN	PEAKS LANE	NEW WALTHAM	528586.1	405098			66013			11 Watts			
Y	19	TRAFFIC SIGN	PEAKS LANE	NEW WALTHAM	528584.68	405105			66014			4 Watts			
Y	2	TRAFFIC SIGN	PEAKS LANE	NEW WALTHAM	528645.8	404840			65985			11 Watts			
Y	20	TRAFFIC SIGN	PEAKS LANE	NEW WALTHAM	528623.81	405104			66016			11 Watts			
Y	21	TRAFFIC SIGN	PEAKS LANE	NEW WALTHAM	528629.43	405091			66020			3 Watts			
Y	22	TRAFFIC SIGN	PEAKS LANE	NEW WALTHAM	528632.27	405098			66019			6 Watts			
Y	23	TRAFFIC SIGN	PEAKS LANE	NEW WALTHAM	528635.46	405107			66018			11 Watts			
Y	24	TRAFFIC SIGN	PEAKS LANE	NEW WALTHAM	528634.85	405114.52			66017			4 Watts			
Y	25	TRAFFIC SIGN	PEAKS LANE	NEW WALTHAM	528629.43	405091			66021			4 Watts			
Y	26	TRAFFIC SIGN	PEAKS LANE	NEW WALTHAM	528632.27	405098			66022			6 Watts			
Y	27	TRAFFIC SIGN	PEAKS LANE	NEW WALTHAM	528635.46	405107			66023			4 Watts			
Y	28	TRAFFIC SIGN	PEAKS LANE	NEW WALTHAM	528634.85	405114.52			66024			4 Watts			
Y	29	TRAFFIC SIGN	PEAKS LANE	NEW WALTHAM	528655.59	405148			65989			4 Watts			
Y	3	TRAFFIC SIGN	PEAKS LANE	NEW WALTHAM	528651.25	404843.33			65986			4,700 Watts			
Y	30	TRAFFIC SIGN	PEAKS LANE	NEW WALTHAM	528656.77	405151			65990			4 Watts			
Y	31	TRAFFIC SIGN	PEAKS LANE	NEW WALTHAM					66931			3 Watts			
Y	31A	TRAFFIC SIGN	PEAKS LANE	NEW WALTHAM					66933						
Y	32	TRAFFIC SIGN	PEAKS LANE	NEW WALTHAM	528624.56	405081.84			66935			4,700 Watts			
Y	33N	TRAFFIC SIGN	PEAKS LANE	NEW WALTHAM	528669.82	405352			65991			3 Watts			
Y	34N	TRAFFIC SIGN	PEAKS LANE	NEW WALTHAM	528669.82	405356.01			69882						
Y	35	TRAFFIC SIGN	PEAKS LANE	NEW WALTHAM	528744.67	405906.45			67174			6 Watts			
Y	35A	TRAFFIC SIGN	PEAKS LANE	NEW WALTHAM	528744.67	405906.45			67178						
Y	36	TRAFFIC SIGN	PEAKS LANE	NEW WALTHAM	528755.72	405902.55			67175			6 Watts			

Y	36A	TRAFFIC SIGN	PEAKS LANE	NEW WALTHAM	528755.72	405902.55			67179						
Y	37	TRAFFIC SIGN	PEAKS LANE	NEW WALTHAM	528744.67	405906.45			67177			6 Watts			
Y	37A	TRAFFIC SIGN	PEAKS LANE	NEW WALTHAM	528744.67	405906.45			67182						
Y	37B	TRAFFIC SIGN	PEAKS LANE	NEW WALTHAM	528744.67	405906.45			67180						
Y	38	TRAFFIC SIGN	PEAKS LANE	NEW WALTHAM	528755.72	405902.55			67176			6 Watts			
Y	38A	TRAFFIC SIGN	PEAKS LANE	NEW WALTHAM	528755.72	405902.55			67183						
Y	38B	TRAFFIC SIGN	PEAKS LANE	NEW WALTHAM	528755.72	405902.55			67181						
Y	39	TRAFFIC SIGN	PEAKS LANE	NEW WALTHAM	528761.54	405933.35			67187						
Y	4	TRAFFIC SIGN	PEAKS LANE	NEW WALTHAM	528616.99	404989			66003			11 Watts			
Y	40NP	TRAFFIC SIGN	PEAKS LANE	NEW WALTHAM	528756.47	405950.85			67188						
Y	41	TRAFFIC SIGN	PEAKS LANE	NEW WALTHAM	528775.49	405937.28			65996			6 Watts			
Y	42	TRAFFIC SIGN	PEAKS LANE	NEW WALTHAM	528771	405948			65995			6 Watts			
Y	43	TRAFFIC SIGN	PEAKS LANE	NEW WALTHAM	528766.74	405957.57			67190						
Y	44	TRAFFIC SIGN	PEAKS LANE	NEW WALTHAM	528775.49	405937.28			67184			6 Watts			
Y	45	TRAFFIC SIGN	PEAKS LANE	NEW WALTHAM	528789.44	405956.69			67185			6 Watts			
Y	45A	TRAFFIC SIGN	PEAKS LANE	NEW WALTHAM	528789.44	405956.69			67186						
Y	46	TRAFFIC SIGN	PEAKS LANE	NEW WALTHAM	528788.55	405966.71			67189						
Y	5	TRAFFIC SIGN	PEAKS LANE	NEW WALTHAM	528616.89	404991			66004			11 Watts			
Y	6	TRAFFIC SIGN	PEAKS LANE	NEW WALTHAM	528609.33	404993			66005			11 Watts			
Y	7	TRAFFIC SIGN	PEAKS LANE	NEW WALTHAM	528609.33	404993			66006			11 Watts			
Y	8	TRAFFIC SIGN	PEAKS LANE	NEW WALTHAM	528613.7	404999			66007			4 Watts			
Y	9	TRAFFIC SIGN	PEAKS LANE	NEW WALTHAM	528615.24	405002			66008			11 Watts			
Y	1	TRAFFIC SIGN	DRURY LANE	NEW WALTHAM	528230.17	404949.79			65877			4 Watts			
Y	1A	TRAFFIC SIGN	DRURY LANE	NEW WALTHAM	528230.17	404949.79			65878						
Y	2	TRAFFIC SIGN	DRURY LANE	NEW WALTHAM	528103.96	404906.23			65879			4 Watts			
Y	2A	TRAFFIC SIGN	DRURY LANE	NEW WALTHAM	528103.96	404906.23			65880						
Y	1	TRAFFIC SIGN	ENFIELD AVENUE	NEW WALTHAM	528627.03	404794			65881			11 Watts			
Y	2	TRAFFIC SIGN	ENFIELD AVENUE	NEW WALTHAM	528628.19	404791			65882			11 Watts			
Y	3	TRAFFIC SIGN	ENFIELD AVENUE	NEW WALTHAM	528620.98	404789.51			65883			4 Watts			
Y	1	TRAFFIC SIGN	GREENLANDS AVENUE	NEW WALTHAM	528369.8	404729.8			65886			7 Watts			
Y	10	TRAFFIC SIGN	LOUTH ROAD	NEW WALTHAM	527277.21	405179.65			65924			6 Watts			
Y	10A	TRAFFIC SIGN	LOUTH ROAD	NEW WALTHAM	527277.21	405179.65			65968						
Y	11	TRAFFIC SIGN	LOUTH ROAD	NEW WALTHAM	527289.88	405185.37			65925			4 Watts			
Y	11A	TRAFFIC SIGN	LOUTH ROAD	NEW WALTHAM	527289.88	405185.37			65966			3 Watts			
Y	11B	TRAFFIC SIGN	LOUTH ROAD	NEW WALTHAM	527289.88	405185.37			65967						
Y	12	TRAFFIC SIGN	LOUTH ROAD	NEW WALTHAM	527277.21	405179.65			65926			6 Watts			
Y	12A	TRAFFIC SIGN	LOUTH ROAD	NEW WALTHAM	527277.21	405179.65			65969			3 Watts			
Y	12B	TRAFFIC SIGN	LOUTH ROAD	NEW WALTHAM	527277.21	405179.65			65970						
Y	13	TRAFFIC SIGN	LOUTH ROAD	NEW WALTHAM	527317.44	405116			65927			7 Watts			
Y	14	TRAFFIC SIGN	LOUTH ROAD	NEW WALTHAM	527372	405045			65928			4 Watts			
Y	15	TRAFFIC SIGN	LOUTH ROAD	NEW WALTHAM	527489.84	404927			65929			11 Watts			
Y	16	TRAFFIC SIGN	LOUTH ROAD	NEW WALTHAM	527547	404888			65930			3 Watts			
Y	17	TRAFFIC SIGN	LOUTH ROAD	NEW WALTHAM	527562.01	404882			65931						
Y	18	TRAFFIC SIGN	LOUTH ROAD	NEW WALTHAM	527594.21	404856			65932			11 Watts			
Y	19	TRAFFIC SIGN	LOUTH ROAD	NEW WALTHAM	527590	404842			65933			3 Watts			
Y	22	TRAFFIC SIGN	LOUTH ROAD	NEW WALTHAM	527574.13	404754.29			65936			11 Watts			
Y	23	TRAFFIC SIGN	LOUTH ROAD	NEW WALTHAM	527601.32	404678.31			65937			11 Watts			
Y	24	TRAFFIC SIGN	LOUTH ROAD	NEW WALTHAM	527586.43	404672.4			65938			4 Watts			
Y	25	TRAFFIC SIGN	LOUTH ROAD	NEW WALTHAM	527601.32	404678.31			65939			11 Watts			
Y	26	TRAFFIC SIGN	LOUTH ROAD	NEW WALTHAM	527586.43	404672.4			65940			4 Watts			
Y	27	TRAFFIC SIGN	LOUTH ROAD	NEW WALTHAM	527691.74	404514.18			69071						
Y	28	TRAFFIC SIGN	LOUTH ROAD	NEW WALTHAM	527697.62	404517.54			69072			3 Watts			
Y	29	TRAFFIC SIGN	LOUTH ROAD	NEW WALTHAM	527695.59	404509.27			69073			3 Watts			
Y	30	TRAFFIC SIGN	LOUTH ROAD	NEW WALTHAM	527727.61	404470.25			65944			14 Watts			
Y	30A	TRAFFIC SIGN	LOUTH ROAD	NEW WALTHAM	527727.61	404470.25			65972						
Y	31	TRAFFIC SIGN	LOUTH ROAD	NEW WALTHAM	527709.25	404459.79			65945			14 Watts			
Y	31A	TRAFFIC SIGN	LOUTH ROAD	NEW WALTHAM	527709.25	404459.79			65971						
Y	32	TRAFFIC SIGN	LOUTH ROAD	NEW WALTHAM	527727.61	404470.25			65946			14 Watts			
Y	33	TRAFFIC SIGN	LOUTH ROAD	NEW WALTHAM	527709.25	404459.79			65947			14 Watts			
Y	34	TRAFFIC SIGN	LOUTH ROAD	NEW WALTHAM	527720.03	404460.64			69075						
Y	35	TRAFFIC SIGN	LOUTH ROAD	NEW WALTHAM	527761.21	404394.81			65950			14 Watts			
Y	36	TRAFFIC SIGN	LOUTH ROAD	NEW WALTHAM	527746.86	404389.07			65951			14 Watts			
Y	37	TRAFFIC SIGN	LOUTH ROAD	NEW WALTHAM	527761.21	404394.81			65952			14 Watts			
Y	38	TRAFFIC SIGN	LOUTH ROAD	NEW WALTHAM	527746.86	404389.07			65953			14 Watts			
Y	39	TRAFFIC SIGN	LOUTH ROAD	NEW WALTHAM	527815.36	404277.23			65954			6 Watts			
Y	40	TRAFFIC SIGN	LOUTH ROAD	NEW WALTHAM	527816.66	404274.75			65955			6 Watts			
Y	41	TRAFFIC SIGN	LOUTH ROAD	NEW WALTHAM	527872.77	404165.45			65956			3 Watts			
Y	42	TRAFFIC SIGN	LOUTH ROAD	NEW WALTHAM	527874.55	404162.82			65958			11 Watts			
Y	43N	TRAFFIC SIGN	LOUTH ROAD	NEW WALTHAM	527874.86	404161.47			65957						
Y	5	TRAFFIC SIGN	LOUTH ROAD	NEW WALTHAM	527278.05	405189.88			65919						
Y	6	TRAFFIC SIGN	LOUTH ROAD	NEW WALTHAM	527278.71	405188.66			65920			3 Watts			
Y	6A	TRAFFIC SIGN	LOUTH ROAD	NEW WALTHAM	527278.71	405188.66			65964						
Y	7	TRAFFIC SIGN	LOUTH ROAD	NEW WALTHAM	527281.05	405184.62			65921			4 Watts			
Y	8	TRAFFIC SIGN	LOUTH ROAD	NEW WALTHAM	527281.99	405183.59			65922						
Y	9	TRAFFIC SIGN	LOUTH ROAD	NEW WALTHAM	527289.88	405185.37			65923			6 Watts			
Y	9A	TRAFFIC SIGN	LOUTH ROAD	NEW WALTHAM	527289.88	405185.37			65965						
Y	10	TRAFFIC SIGN	STATION ROAD	NEW WALTHAM	528348.63	404707.27			66056			4 Watts			
Y	11	TRAFFIC SIGN	STATION ROAD	NEW WALTHAM	528302.34	404687.62			66057			3 Watts			
Y	12	TRAFFIC SIGN	STATION ROAD	NEW WALTHAM	528297.69	404693.84			66058			3 Watts			
Y	13	TRAFFIC SIGN	STATION ROAD	NEW WALTHAM	528302.34	404687.62			66059			70 Watts			
Y	14	TRAFFIC SIGN	STATION ROAD	NEW WALTHAM	528297.69	404693.84			66060			70 Watts			
Y	15	TRAFFIC SIGN	STATION ROAD	NEW WALTHAM	528113.6	404623			66051			7 Watts			
Y	16	TRAFFIC SIGN	STATION ROAD	NEW WALTHAM	528098.6	404630.8			66053			7 Watts			
Y	17	TRAFFIC SIGN	STATION ROAD	NEW WALTHAM	527773.83	404503.56			66061			14 Watts			
Y	18	TRAFFIC SIGN	STATION ROAD	NEW WALTHAM	527763.51	404516.54			66062			14 Watts			
Y	19	TRAFFIC SIGN	STATION ROAD	NEW WALTHAM	527773.83	404503.56			66063			14 Watts			
Y	19A	TRAFFIC SIGN	STATION ROAD	NEW WALTHAM	527773.83	404503.56			66064						
Y	1N	TRAFFIC SIGN	STATION ROAD	NEW WALTHAM	528640.64	404810.84			66045						
Y	20	TRAFFIC SIGN	STATION ROAD	NEW WALTHAM	527763.51	404516.54			66065			14 Watts			
Y	20A	TRAFFIC SIGN	STATION ROAD	NEW WALTHAM	527763.51	404516.54			66066						
Y	21N	TRAFFIC SIGN	STATION ROAD	NEW WALTHAM	527737.19	404498.85			69076						
Y	2N	TRAFFIC SIGN	STATION ROAD	NEW WALTHAM	528630.84	404806.88			66047						
Y	3N	TRAFFIC SIGN	STATION ROAD	NEW WALTHAM					67866						
Y	4N	TRAFFIC SIGN	STATION ROAD	NEW WALTHAM	528532.29	404770.19			66050						
Y	5	TRAFFIC SIGN	STATION ROAD	NEW WALTHAM	528511.6	404759.08			66052			4 Watts			
Y	6	TRAFFIC SIGN	STATION ROAD	NEW WALTHAM	528474.93	404758.68			66054			11 Watts			
Y	7	TRAFFIC SIGN	STATION ROAD	NEW WALTHAM	528378.88	404714.8			66046			7 Watts			
Y	8	TRAFFIC SIGN	STATION ROAD	NEW WALTHAM	528360.18	404718.59			66048			7 Watts			
Y	9	TRAFFIC SIGN	STATION ROAD	NEW WALTHAM	528351.29	404708.2			66055			4 Watts			
Y	1	TRAFFIC SIGN	HEWITTS AVENUE	NEW WALTHAM	529555.8	406733			65887			4 Watts			
Y	10	TRAFFIC SIGN	HEWITTS AVENUE	NEW WALTHAM	529429.83	406573.62			65896			11 Watts			
Y	11	TRAFFIC SIGN	HEWITTS AVENUE	NEW WALTHAM	529413.09	406576.8			65897			7 Watts			
Y	12	TRAFFIC SIGN	HEWITTS AVENUE	NEW WALTHAM	529414.12	406569			65898			7 Watts			
Y	13	TRAFFIC SIGN	HEWITTS AVENUE	NEW WALTHAM					67169			4 Watts			
Y	14	TRAFFIC SIGN	HEWITTS AVENUE	NEW WALTHAM					67170			4 Watts			
Y	15	TRAFFIC SIGN	HEWITTS AVENUE	NEW WALTHAM	529184.31	406279.07			65899			14 Watts			
Y	16	TRAFFIC SIGN	HEWITTS AVENUE	NEW WALTHAM	529176.54	406284.35			65900			11 Watts			
Y	17	TRAFFIC SIGN	HEWITTS AVENUE	NEW WALTHAM	529184.31	406279.07			65901			11 Watts			
Y	18	TRAFFIC SIGN	HEWITTS AVENUE	NEW WALTHAM	529176.54	406284.35			65902			11 Watts			
Y	19	TRAFFIC SIGN	HEWITTS AVENUE	NEW WALTHAM					67171						

Y	20	TRAFFIC SIGN	HEWITTS AVENUE	NEW WALTHAM	528765.37	405973.01			65904			11 Watts			
Y	21	TRAFFIC SIGN	HEWITTS AVENUE	NEW WALTHAM					67172						
Y	22	TRAFFIC SIGN	HEWITTS AVENUE	NEW WALTHAM					67173						
Y	23	TRAFFIC SIGN	HEWITTS AVENUE	NEW WALTHAM	528720.8	405940.28			65907			11 Watts			
Y	24	TRAFFIC SIGN	HEWITTS AVENUE	NEW WALTHAM	528713.92	405955.11			65908			4 Watts			
Y	25	TRAFFIC SIGN	HEWITTS AVENUE	NEW WALTHAM	528400.13	405828.84			65909			6 Watts			
Y	26	TRAFFIC SIGN	HEWITTS AVENUE	NEW WALTHAM	528278.02	405801.83			65910			11 Watts			
Y	26A	TRAFFIC SIGN	HEWITTS AVENUE	NEW WALTHAM	528278.02	405801.83			65918						
Y	27	TRAFFIC SIGN	HEWITTS AVENUE	NEW WALTHAM	528237.89	405780.71			65911			7 Watts			
Y	28	TRAFFIC SIGN	HEWITTS AVENUE	NEW WALTHAM	528237.84	405789.22			65912			11 Watts			
Y	29	TRAFFIC SIGN	HEWITTS AVENUE	NEW WALTHAM	528237.77	405780.36			65913			3 Watts			
Y	2N	TRAFFIC SIGN	HEWITTS AVENUE	NEW WALTHAM	529551.88	406729.84			65888			4 Watts			
Y	3	TRAFFIC SIGN	HEWITTS AVENUE	NEW WALTHAM	529446.93	406613.81			65889			11 Watts			
Y	30	TRAFFIC SIGN	HEWITTS AVENUE	NEW WALTHAM	528235.13	405775.21			65914			4 Watts			
Y	31	TRAFFIC SIGN	HEWITTS AVENUE	NEW WALTHAM	528228.57	405800.2			65915			4 Watts			
Y	32	TRAFFIC SIGN	HEWITTS AVENUE	NEW WALTHAM	528218.23	405793			65916			6 Watts			
Y	4	TRAFFIC SIGN	HEWITTS AVENUE	NEW WALTHAM	529429.51	406602.63			65890			11 Watts			
Y	5	TRAFFIC SIGN	HEWITTS AVENUE	NEW WALTHAM	529423.96	406600.02			65891			11 Watts			
Y	6	TRAFFIC SIGN	HEWITTS AVENUE	NEW WALTHAM	529445.81	406589.2			65892			7 Watts			
Y	7	TRAFFIC SIGN	HEWITTS AVENUE	NEW WALTHAM	529436.23	406590.29			65893			7 Watts			
Y	8	TRAFFIC SIGN	HEWITTS AVENUE	NEW WALTHAM	529426.22	406587.17			65894			11 Watts			
Y	9	TRAFFIC SIGN	HEWITTS AVENUE	NEW WALTHAM	529438.45	406574.86			65895			7 Watts			
Y	1	TRAFFIC SIGN	HUMBERSTON AVENUE	HUMBERSTON	528662.15	404815			65559			11 Watts			
Y	10	TRAFFIC SIGN	HUMBERSTON AVENUE	HUMBERSTON	530279.99	405133.45			67838			11 Watts			
Y	11	TRAFFIC SIGN	HUMBERSTON AVENUE	HUMBERSTON	530283.24	405133.69			67835						
Y	12	TRAFFIC SIGN	HUMBERSTON AVENUE	HUMBERSTON	530337.81	405151.23			67824			3 Watts			
Y	13	TRAFFIC SIGN	HUMBERSTON AVENUE	HUMBERSTON	530337.81	405151.23			67830			70 Watts			
Y	14	TRAFFIC SIGN	HUMBERSTON AVENUE	HUMBERSTON	530344.32	405142.47			67825			3 Watts			
Y	15	TRAFFIC SIGN	HUMBERSTON AVENUE	HUMBERSTON	530344.32	405142.47			67831			70 Watts			
Y	16	TRAFFIC SIGN	HUMBERSTON AVENUE	HUMBERSTON	530667.23	405221.57			67826			3 Watts			
Y	17	TRAFFIC SIGN	HUMBERSTON AVENUE	HUMBERSTON	530667.23	405221.57			67833			70 Watts			
Y	18	TRAFFIC SIGN	HUMBERSTON AVENUE	HUMBERSTON	530675.24	405213.56			67827			3 Watts			
Y	19	TRAFFIC SIGN	HUMBERSTON AVENUE	HUMBERSTON	530675.24	405213.56			67832			70 Watts			
Y	2	TRAFFIC SIGN	HUMBERSTON AVENUE	HUMBERSTON	528668.77	404815.01			65560			11 Watts			
Y	20N	TRAFFIC SIGN	HUMBERSTON AVENUE	HUMBERSTON					69307						
Y	21N	TRAFFIC SIGN	HUMBERSTON AVENUE	HUMBERSTON					69905						
Y	22	TRAFFIC SIGN	HUMBERSTON AVENUE	HUMBERSTON	530921.74	405277.01			65563			4 Watts			
Y	22A	TRAFFIC SIGN	HUMBERSTON AVENUE	HUMBERSTON	530921.74	405277.01			65564						
Y	23	TRAFFIC SIGN	HUMBERSTON AVENUE	HUMBERSTON	530923.86	405265.95			65565			6 Watts			
Y	24N	TRAFFIC SIGN	HUMBERSTON AVENUE	HUMBERSTON	530926.63	405256.08			65566			3 Watts			
Y	25N	TRAFFIC SIGN	HUMBERSTON AVENUE	HUMBERSTON	530930.85	405253.33			65567			3 Watts			
Y	5	TRAFFIC SIGN	HUMBERSTON AVENUE	HUMBERSTON	529331.27	404949.97			67822			3 Watts			
Y	6	TRAFFIC SIGN	HUMBERSTON AVENUE	HUMBERSTON	529331.27	404949.97			67828			70 Watts			
Y	7	TRAFFIC SIGN	HUMBERSTON AVENUE	HUMBERSTON	529339.53	404941.46			67823			3 Watts			
Y	8	TRAFFIC SIGN	HUMBERSTON AVENUE	HUMBERSTON	529339.53	404941.46			67829			70 Watts			
Y	9	TRAFFIC SIGN	HUMBERSTON AVENUE	HUMBERSTON	530267.47	405130.71			67834			3 Watts			
Y	1	TRAFFIC SIGN	GRANGE FARM LANE	HUMBERSTON					68623			4 Watts			
Y	1	TRAFFIC SIGN	LOUTH ROAD ROUNDABOUT	NEW WALTHAM	527597.84	404894			65976			4 Watts			
Y	2	TRAFFIC SIGN	LOUTH ROAD ROUNDABOUT	NEW WALTHAM	527581.17	404873			65977			4 Watts			
Y	3	TRAFFIC SIGN	LOUTH ROAD ROUNDABOUT	NEW WALTHAM	527579.72	404890			65978			4 Watts			
Y	1X	TRAFFIC SIGN	LOW FARM ROUNDABOUT	NEW WALTHAM	528205.43	405773			65979			3 Watts			
Y	2X	TRAFFIC SIGN	LOW FARM ROUNDABOUT	NEW WALTHAM	528180.74	405764			65980			3 Watts			
Y	3X	TRAFFIC SIGN	LOW FARM ROUNDABOUT	NEW WALTHAM	528193.38	405796			65981			4 Watts			
Y	1X	TRAFFIC SIGN	ASHBY CROSS ROADS ROUNDABOUT	ASHBY CUM FENBY	524197.77	400625.2			63031			11 Watts			
Y	2X	TRAFFIC SIGN	ASHBY CROSS ROADS ROUNDABOUT	ASHBY CUM FENBY	524205.05	400621.28			63032			11 Watts			
Y	3X	TRAFFIC SIGN	ASHBY CROSS ROADS ROUNDABOUT	ASHBY CUM FENBY	524201.54	400615.1			63033			11 Watts			
Y	4X	TRAFFIC SIGN	ASHBY CROSS ROADS ROUNDABOUT	ASHBY CUM FENBY	524194.67	400617.71			63034			11 Watts			
Y	1N	TRAFFIC SIGN	ASHBY HILL	ASHBY CUM FENBY	524209.45	400633.91			69947						
Y	2N	TRAFFIC SIGN	ASHBY HILL	ASHBY CUM FENBY	524211.61	400635.04			69946						
Y	1N	TRAFFIC SIGN	HILMORE ROAD	LACEBY	523301.22	407457			65860						
Y	2	TRAFFIC SIGN	HILMORE ROAD	LACEBY	523302.85	407458			65861			6 Watts			
Y	3	TRAFFIC SIGN	HILMORE ROAD	LACEBY	523309.17	407467			65863			4 Watts			
Y	4N	TRAFFIC SIGN	HILMORE ROAD	LACEBY	523299.23	407465.02			68935						
Y	5	TRAFFIC SIGN	HILMORE ROAD	LACEBY	523290.44	407464			65865			4 Watts			
Y	1N	TRAFFIC SIGN	IMMINGHAM ROAD	STALLINGBOROUGH	519568.97	411317			66111			3 Watts			
Y	2	TRAFFIC SIGN	IMMINGHAM ROAD	STALLINGBOROUGH	519448.07	411349			66112			3 Watts			
Y	3	TRAFFIC SIGN	IMMINGHAM ROAD	STALLINGBOROUGH	518707.33	412013.72			66113			4 Watts			
Y	4	TRAFFIC SIGN	IMMINGHAM ROAD	STALLINGBOROUGH	518706.56	412014.62			66114			49 Watts			
Y	5	TRAFFIC SIGN	IMMINGHAM ROAD	STALLINGBOROUGH	518705.59	412018.01			66115			4 Watts			
Y	6	TRAFFIC SIGN	IMMINGHAM ROAD	STALLINGBOROUGH	518676.58	412068.75			66116			4 Watts			
Y	7	TRAFFIC SIGN	IMMINGHAM ROAD	STALLINGBOROUGH	518674.61	412071.82			66117			4 Watts			
Y	1N	TRAFFIC SIGN	BRIGSLEY ROAD	EAST RAVENDALE	524191.28	400605.71			69950						
Y	2N	TRAFFIC SIGN	BRIGSLEY ROAD	EAST RAVENDALE	524189.92	400604.83			69951						
Y	1X	TRAFFIC SIGN	BRADLEY ROUNDABOUT	GRIMSBY	524347.91	407662			63795			11 Watts			
Y	2X	TRAFFIC SIGN	BRADLEY ROUNDABOUT	GRIMSBY	524356.19	407643			63796			4 Watts			
Y	3X	TRAFFIC SIGN	BRADLEY ROUNDABOUT	GRIMSBY	524337.51	407637			63797			4 Watts			
Y	4X	TRAFFIC SIGN	BRADLEY ROUNDABOUT	GRIMSBY	524331.13	407653			63798			7 Watts			
Y	1	TRAFFIC SIGN	CHURCH AVENUE NORTH SEA LANE	CLEETHORPES	530871.35	406079			63161						
Y	1N	TRAFFIC SIGN	CORPORATION ROAD ROUNDABOUT	GRIMSBY	526932.9	409970			63990			4 Watts			
Y	2	TRAFFIC SIGN	CORPORATION ROAD ROUNDABOUT	GRIMSBY	526927.3	409967			63991			4 Watts			
Y	1X	TRAFFIC SIGN	MARKET HOTEL ROUNDABOUT	GRIMSBY	525695.41	409402.79			64037			11 Watts			
Y	2X	TRAFFIC SIGN	MARKET HOTEL ROUNDABOUT	GRIMSBY	525684.4	409407.74			64038			11 Watts			
Y	3X	TRAFFIC SIGN	MARKET HOTEL ROUNDABOUT	GRIMSBY	525687.13	409414.74			64039			11 Watts			
Y	4X	TRAFFIC SIGN	MARKET HOTEL ROUNDABOUT	GRIMSBY	525698.59	409411.76			64040			11 Watts			
Y	1X	TRAFFIC SIGN	CROMWELL ROAD ROUNDABOUT	GRIMSBY	524861.61	409805.94			66816			7 Watts			
Y	1XA	TRAFFIC SIGN	CROMWELL ROAD ROUNDABOUT	GRIMSBY	524861.61	409805.94			66819						
Y	2X	TRAFFIC SIGN	CROMWELL ROAD ROUNDABOUT	GRIMSBY	524849.79	409815.22			66817			7 Watts			
Y	2XA	TRAFFIC SIGN	CROMWELL ROAD ROUNDABOUT	GRIMSBY	524849.79	409815.22			66820						
Y	3X	TRAFFIC SIGN	CROMWELL ROAD ROUNDABOUT	GRIMSBY	524860.25	409816.31			66818			7 Watts			
Y	3XA	TRAFFIC SIGN	CROMWELL ROAD ROUNDABOUT	GRIMSBY	524860.25	409816.31			66821						
Y	1X	TRAFFIC SIGN	DAVENPORT DRIVE ROUNDABOUT	CLEETHORPES	529458.59	408037			63208			11 Watts			
Y	2X	TRAFFIC SIGN	DAVENPORT DRIVE ROUNDABOUT	CLEETHORPES	529460.49	408023			63209			11 Watts			
Y	3X	TRAFFIC SIGN	DAVENPORT DRIVE ROUNDABOUT	CLEETHORPES	529445.36	408015			63210			7 Watts			
Y	4X	TRAFFIC SIGN	DAVENPORT DRIVE ROUNDABOUT	CLEETHORPES	529433.44	408030			63211			4 Watts			
Y	1N	TRAFFIC SIGN	FREDERICK WARD WAY SERVICE	GRIMSBY	527060.54	409547			64175						
Y	2N	TRAFFIC SIGN	FREDERICK WARD WAY SERVICE	GRIMSBY	527059.74	409550			64176						
Y	3	TRAFFIC SIGN	FREDERICK WARD WAY SERVICE	GRIMSBY	527065.22	409555			64177			4 Watts			
Y	1	TRAFFIC SIGN	GILBEY ROAD NORTH	GRIMSBY	525342.91	410754			64254						
Y	2	TRAFFIC SIGN	GILBEY ROAD NORTH	GRIMSBY	525867.24	411015.84			68002			4 Watts			
Y	1X	TRAFFIC SIGN	ISAACS HILL ROUNDABOUT	CLEETHORPES	530217.75	408938			63313			4 Watts			
Y	2X	TRAFFIC SIGN	ISAACS HILL ROUNDABOUT	CLEETHORPES	530220.47	408926			63314			11 Watts			
Y	3X	TRAFFIC SIGN	ISAACS HILL ROUNDABOUT	CLEETHORPES	530209.36	408930			63315			11 Watts			
Y	1	TRAFFIC SIGN	KINGS ROAD M/R/A	CLEETHORPES	531794.64	407244			63352			11 Watts			
Y	1	TRAFFIC SIGN	KINGS ROAD NORTH SEA LANE	CLEETHORPES	532291.71	406337			63353			6 Watts			
Y	1A	TRAFFIC SIGN	KINGS ROAD NORTH SEA LANE	CLEETHORPES	532291.71	406337			63354						
Y	2	TRAFFIC SIGN	KINGS ROAD NORTH SEA LANE	CLEETHORPES	532297.77	406324			63355			11 Watts			
Y	2A	TRAFFIC SIGN	KINGS ROAD NORTH SEA LANE	CLEETHORPES	532297.77	406324			63356						
Y	3	TRAFFIC SIGN	KINGS ROAD NORTH SEA LANE	CLEETHORPES	532287.74	406329			63357			11 Watts			
Y	3A	TRAFFIC SIGN	KINGS ROAD NORTH SEA LANE	CLEETHORPES	532287.74	406329			63358						
Y	1	TRAFFIC SIGN	LOCKHILL ROUNDABOUT	GRIMSBY	527216.25	410380.91			64476			14 Watts			

Y	2	TRAFFIC SIGN	LOCKHILL ROUNDABOUT	GRIMSBY	527199.76	410408.01			64478			14 Watts			
Y	3	TRAFFIC SIGN	LOCKHILL ROUNDABOUT	GRIMSBY	527225.72	410416.11			64480			14 Watts			
Y	4	TRAFFIC SIGN	LOCKHILL ROUNDABOUT	GRIMSBY	527235.04	410396.71			64482			14 Watts			
Y	1X	TRAFFIC SIGN	SCARTHO FORK ROUNDABOUT	GRIMSBY	526495.56	406332			64753			11 Watts			
Y	2X	TRAFFIC SIGN	SCARTHO FORK ROUNDABOUT	GRIMSBY	526481.84	406341			64754			11 Watts			
Y	3X	TRAFFIC SIGN	SCARTHO FORK ROUNDABOUT	GRIMSBY	526496.38	406345			64755			11 Watts			
Y	1X	TRAFFIC SIGN	LOVE LANE CORNER ROUNDABOUT	GRIMSBY	528922.52	408091			64490			6 Watts			
Y	1XA	TRAFFIC SIGN	LOVE LANE CORNER ROUNDABOUT	GRIMSBY					69901						
Y	2X	TRAFFIC SIGN	LOVE LANE CORNER ROUNDABOUT	GRIMSBY	528947.49	408092			64491			3 Watts			
Y	2XA	TRAFFIC SIGN	LOVE LANE CORNER ROUNDABOUT	GRIMSBY					69902						
Y	3X	TRAFFIC SIGN	LOVE LANE CORNER ROUNDABOUT	GRIMSBY	528933.11	408079			64492			4 Watts			
Y	3XA	TRAFFIC SIGN	LOVE LANE CORNER ROUNDABOUT	GRIMSBY					69903						
Y	1	TRAFFIC SIGN	MILTON ROAD ROUNDABOUT	GRIMSBY	525967.78	407785.48			64516			4 Watts			
Y	2	TRAFFIC SIGN	MILTON ROAD ROUNDABOUT	GRIMSBY	525972.43	407781.01			64517			3 Watts			
Y	3	TRAFFIC SIGN	MILTON ROAD ROUNDABOUT	GRIMSBY	525967.58	407777.87			64518			4 Watts			
Y	4	TRAFFIC SIGN	MILTON ROAD ROUNDABOUT	GRIMSBY	525964.71	407782.07			64519			3 Watts			
Y	1X	TRAFFIC SIGN	MOODY M/R/A	GRIMSBY	525872.27	411048.94			64530			3 Watts			
Y	1XA	TRAFFIC SIGN	MOODY M/R/A	GRIMSBY	525878.43	411045			64533						
Y	2X	TRAFFIC SIGN	MOODY M/R/A	GRIMSBY	525872.17	411043			64531			3 Watts			
Y	2XA	TRAFFIC SIGN	MOODY M/R/A	GRIMSBY	525872.17	411043			64534						
Y	3X	TRAFFIC SIGN	MOODY M/R/A	GRIMSBY	525871.82	411047			64532			3 Watts			
Y	3XA	TRAFFIC SIGN	MOODY M/R/A	GRIMSBY	525871.82	411047			64535						
Y	1X	TRAFFIC SIGN	NUNS CORNER ROUNDABOUT	GRIMSBY	526434.88	407881			64574			11 Watts			
Y	2X	TRAFFIC SIGN	NUNS CORNER ROUNDABOUT	GRIMSBY	526453.62	407867			64575			11 Watts			
Y	3X	TRAFFIC SIGN	NUNS CORNER ROUNDABOUT	GRIMSBY	526437.46	407863			64576			11 Watts			
Y	1	TRAFFIC SIGN	OLD CLEETHORPES ROAD	GRIMSBY	527568.16	410429.42			64577			4 Watts			
Y	2	TRAFFIC SIGN	OLD CLEETHORPES ROAD	GRIMSBY	527659	410444			64578			7 Watts			
Y	3	TRAFFIC SIGN	OLD CLEETHORPES ROAD	GRIMSBY	527659	410437			64579			7 Watts			
Y	1	TRAFFIC SIGN	PARK STREET ROUNDABOUT	GRIMSBY	528685.46	409443			64603			7 Watts			
Y	2	TRAFFIC SIGN	PARK STREET ROUNDABOUT	GRIMSBY	528690.07	409439			64604			7 Watts			
Y	3	TRAFFIC SIGN	PARK STREET ROUNDABOUT	GRIMSBY	528688.29	409434			64605			7 Watts			
Y	4	TRAFFIC SIGN	PARK STREET ROUNDABOUT	GRIMSBY	528689.82	409886.05			64596			7 Watts			
Y	5	TRAFFIC SIGN	PARK STREET ROUNDABOUT	GRIMSBY	528680.61	409438			64606			7 Watts			
Y	1	TRAFFIC SIGN	WESTGATE ROUNDABOUT	GRIMSBY	526122.63	410373.12			64699			6 Watts			
Y	1A	TRAFFIC SIGN	WESTGATE ROUNDABOUT	GRIMSBY	526122.63	410373.12			64700						
Y	2	TRAFFIC SIGN	WESTGATE ROUNDABOUT	GRIMSBY	526106.13	410391.83			64701			4 Watts			
Y	2A	TRAFFIC SIGN	WESTGATE ROUNDABOUT	GRIMSBY	526106.13	410391.83			64702						
Y	3	TRAFFIC SIGN	WESTGATE ROUNDABOUT	GRIMSBY	526116.25	410418.03			64703			4 Watts			
Y	3A	TRAFFIC SIGN	WESTGATE ROUNDABOUT	GRIMSBY	526116.25	410418.03			64704						
Y	4	TRAFFIC SIGN	WESTGATE ROUNDABOUT	GRIMSBY	526144.06	410419.98			64705			3 Watts			
Y	4A	TRAFFIC SIGN	WESTGATE ROUNDABOUT	GRIMSBY	526144.06	410419.98			64706						
Y	5	TRAFFIC SIGN	WESTGATE ROUNDABOUT	GRIMSBY	526148.39	410377.21			64707			11 Watts			
Y	5A	TRAFFIC SIGN	WESTGATE ROUNDABOUT	GRIMSBY	526148.39	410377.21			64708						
Y	1X	TRAFFIC SIGN	RUNSWICK ROAD MRA	GRIMSBY	528458.6	408945			64746			7 Watts			
Y	2X	TRAFFIC SIGN	RUNSWICK ROAD MRA	GRIMSBY	528439.65	408945.81			68973			3 Watts			
Y	3X	TRAFFIC SIGN	RUNSWICK ROAD MRA	GRIMSBY	528446.31	408956			64748			3 Watts			
Y	1X	TRAFFIC SIGN	SEA ROAD ROUNDABOUT	CLEETHORPES	530650.44	408908.63			68147			3 Watts			
Y	2X	TRAFFIC SIGN	SEA ROAD ROUNDABOUT	CLEETHORPES	530647.61	408910.45			68148			3 Watts			
Y	3X	TRAFFIC SIGN	SEA ROAD ROUNDABOUT	CLEETHORPES	530650.01	408912.74			68149			3 Watts			
Y	4X	TRAFFIC SIGN	SEA ROAD ROUNDABOUT	CLEETHORPES	530651.93	408910.34			68150			3 Watts			
Y	1X	TRAFFIC SIGN	SECOND AVENUE ROUNDABOUT	GRIMSBY	526015.9	407589.99			64779			3 Watts			
Y	2X	TRAFFIC SIGN	SECOND AVENUE ROUNDABOUT	GRIMSBY	526005.25	407587.39			64780			3 Watts			
Y	3X	TRAFFIC SIGN	SECOND AVENUE ROUNDABOUT	GRIMSBY	526002.65	407596.22			64781			6 Watts			
Y	4X	TRAFFIC SIGN	SECOND AVENUE ROUNDABOUT	GRIMSBY	526012.39	407599.96			64782			3 Watts			
Y	1X	TRAFFIC SIGN	TOOTHILL ROUNDABOUT	GRIMSBY	524636.2	408875			64883			7 Watts			
Y	2X	TRAFFIC SIGN	TOOTHILL ROUNDABOUT	GRIMSBY	524630.52	408868			64884			6 Watts			
Y	3X	TRAFFIC SIGN	TOOTHILL ROUNDABOUT	GRIMSBY	524629.22	408878			64885			4 Watts			
Y	1	TRAFFIC SIGN	WESTGATE EAST	GRIMSBY	527216.25	410380.91			64477			14 Watts			
Y	1A	TRAFFIC SIGN	WESTGATE EAST	GRIMSBY	526190.31	410371.27			65075						
Y	1B	TRAFFIC SIGN	WESTGATE EAST	GRIMSBY	526190.31	410371.27			65076						
Y	2	TRAFFIC SIGN	WESTGATE EAST	GRIMSBY	527199.76	410408.01			64479			14 Watts			
Y	2A	TRAFFIC SIGN	WESTGATE EAST	GRIMSBY	526182.46	410364.02			65077						
Y	2B	TRAFFIC SIGN	WESTGATE EAST	GRIMSBY	526182.46	410364.02			65078						
Y	3	TRAFFIC SIGN	WESTGATE EAST	GRIMSBY	527225.72	410416.11			64481			14 Watts			
Y	3A	TRAFFIC SIGN	WESTGATE EAST	GRIMSBY	526182.46	410364.02			65079						
Y	3B	TRAFFIC SIGN	WESTGATE EAST	GRIMSBY	526182.46	410364.02			65080						
Y	4	TRAFFIC SIGN	WESTGATE EAST	GRIMSBY	527235.04	410396.71			64483			14 Watts			
Y	4A	TRAFFIC SIGN	WESTGATE EAST	GRIMSBY	526177.13	410355.74			65081						
Y	4B	TRAFFIC SIGN	WESTGATE EAST	GRIMSBY	526177.13	410355.74			65082						
Y	5	TRAFFIC SIGN	WESTGATE EAST	GRIMSBY	527164.73	410399.32			65083			14 Watts			
Y	5A	TRAFFIC SIGN	WESTGATE EAST	GRIMSBY	527164.73	410399.32			65084						
Y	5B	TRAFFIC SIGN	WESTGATE EAST	GRIMSBY	527164.73	410399.32			65085						
Y	6	TRAFFIC SIGN	WESTGATE EAST	GRIMSBY	527171.27	410389.13			65086			14 Watts			
Y	6A	TRAFFIC SIGN	WESTGATE EAST	GRIMSBY	527171.27	410389.13			65087						
Y	6B	TRAFFIC SIGN	WESTGATE EAST	GRIMSBY	527171.27	410389.13			65088						
Y	7	TRAFFIC SIGN	WESTGATE EAST	GRIMSBY	527171.27	410389.13			65089			14 Watts			
Y	7A	TRAFFIC SIGN	WESTGATE EAST	GRIMSBY	527171.27	410389.13			65090						
Y	7B	TRAFFIC SIGN	WESTGATE EAST	GRIMSBY	527171.27	410389.13			65091						
Y	8	TRAFFIC SIGN	WESTGATE EAST	GRIMSBY	527175.86	410375.99			65092			14 Watts			
Y	8A	TRAFFIC SIGN	WESTGATE EAST	GRIMSBY	527175.86	410375.99			65093						
Y	8B	TRAFFIC SIGN	WESTGATE EAST	GRIMSBY	527175.86	410375.99			65094						
Y	1	TRAFFIC SIGN	WESTGATE WEST	GRIMSBY	525366.42	410694.87			65095			14 Watts			
Y	10	TRAFFIC SIGN	WESTGATE WEST	GRIMSBY	526084.19	410440.97			65116			14 Watts			
Y	10A	TRAFFIC SIGN	WESTGATE WEST	GRIMSBY	526084.19	410440.97			65117						
Y	10B	TRAFFIC SIGN	WESTGATE WEST	GRIMSBY	526084.19	410440.97			65118						
Y	11	TRAFFIC SIGN	WESTGATE WEST	GRIMSBY	526084.19	410440.97			65119			14 Watts			
Y	11A	TRAFFIC SIGN	WESTGATE WEST	GRIMSBY	526084.19	410440.97			65120						
Y	11B	TRAFFIC SIGN	WESTGATE WEST	GRIMSBY	526084.19	410440.97			65121						
Y	12	TRAFFIC SIGN	WESTGATE WEST	GRIMSBY	526077.25	410433.21			65122			14 Watts			
Y	12A	TRAFFIC SIGN	WESTGATE WEST	GRIMSBY	526077.25	410433.21			65123						
Y	12B	TRAFFIC SIGN	WESTGATE WEST	GRIMSBY	526077.25	410433.21			65124						
Y	13	TRAFFIC SIGN	WESTGATE WEST	GRIMSBY	525444.49	410642			65125			3 Watts			
Y	1A	TRAFFIC SIGN	WESTGATE WEST	GRIMSBY	525366.42	410694.87			65096						
Y	1B	TRAFFIC SIGN	WESTGATE WEST	GRIMSBY	525366.42	410694.87			65097						
Y	2	TRAFFIC SIGN	WESTGATE WEST	GRIMSBY	525361.83	410684.96			65098			14 Watts			
Y	2A	TRAFFIC SIGN	WESTGATE WEST	GRIMSBY	525361.83	410684.96			65099						
Y	2B	TRAFFIC SIGN	WESTGATE WEST	GRIMSBY	525361.83	410684.96			65100						
Y	3	TRAFFIC SIGN	WESTGATE WEST	GRIMSBY	525361.83	410684.96			65101			14 Watts			
Y	3A	TRAFFIC SIGN	WESTGATE WEST	GRIMSBY	525361.83	410684.96			65102						
Y	3B	TRAFFIC SIGN	WESTGATE WEST	GRIMSBY	525361.83	410684.96			65103						
Y	4	TRAFFIC SIGN	WESTGATE WEST	GRIMSBY	525358.35	410675.14			65104			14 Watts			
Y	4A	TRAFFIC SIGN	WESTGATE WEST	GRIMSBY	525358.35	410675.14			65105						
Y	4B	TRAFFIC SIGN	WESTGATE WEST	GRIMSBY	525358.35	410675.14			65106						
Y	5	TRAFFIC SIGN	WESTGATE WEST	GRIMSBY	526051.34	410479			65107			4 Watts			
Y	5A	TRAFFIC SIGN	WESTGATE WEST	GRIMSBY	526051.34	410479			65108						
Y	6	TRAFFIC SIGN	WESTGATE WEST	GRIMSBY	526043.59	410486			65109			4 Watts			
Y	6A	TRAFFIC SIGN	WESTGATE WEST	GRIMSBY	526043.59	410486			65110						
Y	7	TRAFFIC SIGN	WESTGATE WEST	GRIMSBY	526043.59	410486			65111			4 Watts			
Y	8	TRAFFIC SIGN	WESTGATE WEST	GRIMSBY	526051.34	410479			65112			4 Watts			
Y	9	TRAFFIC SIGN	WESTGATE WEST	GRIMSBY	526090.81	410448.29			65113			14 Watts			

Y	9A	TRAFFIC SIGN	WESTGATE WEST	GRIMSBY	526090.81	410448.29			65114						
Y	9B	TRAFFIC SIGN	WESTGATE WEST	GRIMSBY	526090.81	410448.29			65115						
Y	1	TRAFFIC SIGN	GREAT COATES LINK	HEALING	522907.23	410019.13			65424			11 Watts			
Y	10	TRAFFIC SIGN	GREAT COATES LINK	HEALING	522998.56	410171.63			65429			20 Watts			
Y	11	TRAFFIC SIGN	GREAT COATES LINK	HEALING	523031.12	410238.5			65430			11 Watts			
Y	11A	TRAFFIC SIGN	GREAT COATES LINK	HEALING	523031.12	410238.5			65447						
Y	12	TRAFFIC SIGN	GREAT COATES LINK	HEALING	523020.15	410243.41			65431			11 Watts			
Y	12A	TRAFFIC SIGN	GREAT COATES LINK	HEALING	523020.15	410243.41			65448						
Y	13	TRAFFIC SIGN	GREAT COATES LINK	HEALING	523245.65	410883.19			65432			125 Watts			
Y	14	TRAFFIC SIGN	GREAT COATES LINK	HEALING					67042			3 Watts			
Y	15	TRAFFIC SIGN	GREAT COATES LINK	HEALING					67043			3 Watts			
Y	16	TRAFFIC SIGN	GREAT COATES LINK	HEALING					67041			3 Watts			
Y	17	TRAFFIC SIGN	GREAT COATES LINK	HEALING					67040			3 Watts			
Y	18N	TRAFFIC SIGN	GREAT COATES LINK	HEALING	523292	411018			65433						
Y	19N	TRAFFIC SIGN	GREAT COATES LINK	HEALING	523310.86	411030			65434						
Y	2	TRAFFIC SIGN	GREAT COATES LINK	HEALING	522907.16	410034.17			65425			7 Watts			
Y	20	TRAFFIC SIGN	GREAT COATES LINK	HEALING	523316	411036			65435			3 Watts			
Y	21	TRAFFIC SIGN	GREAT COATES LINK	HEALING	523292	411072			65436			11 Watts			
Y	22N	TRAFFIC SIGN	GREAT COATES LINK	HEALING	523313	411087			65437						
Y	23	TRAFFIC SIGN	GREAT COATES LINK	HEALING					67044			11 Watts			
Y	24	TRAFFIC SIGN	GREAT COATES LINK	HEALING	523322	411124			65439			4 Watts			
Y	25	TRAFFIC SIGN	GREAT COATES LINK	HEALING	523364.65	411218.02			65440			4 Watts			
Y	26	TRAFFIC SIGN	GREAT COATES LINK	HEALING	523361	411231			65441			11 Watts			
Y	27	TRAFFIC SIGN	GREAT COATES LINK	HEALING	523362.63	411236.25			65442			4 Watts			
Y	28	TRAFFIC SIGN	GREAT COATES LINK	HEALING	523365	411238			65443			11 Watts			
Y	29	TRAFFIC SIGN	GREAT COATES LINK	HEALING	523381	411256			65444			11 Watts			
Y	3	TRAFFIC SIGN	GREAT COATES LINK	HEALING	522919.09	410028.08			65426			3 Watts			
Y	4	TRAFFIC SIGN	GREAT COATES LINK	HEALING	522919.09	410028.08			65427			6 Watts			
Y	4A	TRAFFIC SIGN	GREAT COATES LINK	HEALING					67034						
Y	5	TRAFFIC SIGN	GREAT COATES LINK	HEALING	522907.16	410034.17			65428			3 Watts			
Y	5A	TRAFFIC SIGN	GREAT COATES LINK	HEALING					67035						
Y	6	TRAFFIC SIGN	GREAT COATES LINK	HEALING					67036			3 Watts			
Y	7	TRAFFIC SIGN	GREAT COATES LINK	HEALING					67039			3 Watts			
Y	8	TRAFFIC SIGN	GREAT COATES LINK	HEALING					67037			3 Watts			
Y	9	TRAFFIC SIGN	GREAT COATES LINK	HEALING					67038			3 Watts			
Y	1X	TRAFFIC SIGN	GREAT COATES LINK ROUNDABOUT	HEALING	523355	411251			65449			4 Watts			
Y	1XA	TRAFFIC SIGN	GREAT COATES LINK ROUNDABOUT	HEALING	523355	411251			65453						
Y	2X	TRAFFIC SIGN	GREAT COATES LINK ROUNDABOUT	HEALING	523345	411263			65450			4 Watts			
Y	2XA	TRAFFIC SIGN	GREAT COATES LINK ROUNDABOUT	HEALING	523345	411263			65454						
Y	3X	TRAFFIC SIGN	GREAT COATES LINK ROUNDABOUT	HEALING	523361	411274			65451			4 Watts			
Y	3XA	TRAFFIC SIGN	GREAT COATES LINK ROUNDABOUT	HEALING	523361	411274			65452						
Y	1X	TRAFFIC SIGN	GREAT COATES ROAD ROUNDABOUT	HEALING	522895.53	409996			65466			6 Watts			
Y	2X	TRAFFIC SIGN	GREAT COATES ROAD ROUNDABOUT	HEALING	522906.94	410000.25			65467			6 Watts			
Y	3X	TRAFFIC SIGN	GREAT COATES ROAD ROUNDABOUT	HEALING	522914.32	409985			65468			6 Watts			
Y	1X	TRAFFIC SIGN	KINGS ROAD ROUNDABOUT	IMMINGHAM	519551.74	414706			65635			11 Watts			
Y	1XA	TRAFFIC SIGN	KINGS ROAD ROUNDABOUT	IMMINGHAM	519551.74	414706			65638						
Y	2X	TRAFFIC SIGN	KINGS ROAD ROUNDABOUT	IMMINGHAM	519544.93	414730			65636			11 Watts			
Y	2XA	TRAFFIC SIGN	KINGS ROAD ROUNDABOUT	IMMINGHAM	519544.93	414730			65639						
Y	3X	TRAFFIC SIGN	KINGS ROAD ROUNDABOUT	IMMINGHAM	519559.87	414722			65637			6 Watts			
Y	3XA	TRAFFIC SIGN	KINGS ROAD ROUNDABOUT	IMMINGHAM	519559.87	414722			65640						
Y	1	TRAFFIC SIGN	PELHAM INDUSTRIAL ESTATE	IMMINGHAM					69845			4 Watts			
Y	1	TRAFFIC SIGN	LACEBY BYPASS	LACEBY	521098.2	406118			65829			6 Watts			
Y	10N	TRAFFIC SIGN	LACEBY BYPASS	LACEBY	522235.81	406595			65839						
Y	11N	TRAFFIC SIGN	LACEBY BYPASS	LACEBY	522249.05	406602			65840						
Y	12	TRAFFIC SIGN	LACEBY BYPASS	LACEBY	522932.52	407098			65841			11 Watts			
Y	13	TRAFFIC SIGN	LACEBY BYPASS	LACEBY	522942.8	407109			65842			11 Watts			
Y	14	TRAFFIC SIGN	LACEBY BYPASS	LACEBY	523006.39	407176.72			65843			11 Watts			
Y	15	TRAFFIC SIGN	LACEBY BYPASS	LACEBY	523017.15	407190.75			65844			11 Watts			
Y	17	TRAFFIC SIGN	LACEBY BYPASS	LACEBY	523209.81	407389.57			65845			6 Watts			
Y	18	TRAFFIC SIGN	LACEBY BYPASS	LACEBY	523215.78	407381.12			65846			6 Watts			
Y	19	TRAFFIC SIGN	LACEBY BYPASS	LACEBY	523218.82	407380.38			65849			6 Watts			
Y	19A	TRAFFIC SIGN	LACEBY BYPASS	LACEBY	523218.82	407380.38			65850						
Y	20	TRAFFIC SIGN	LACEBY BYPASS	LACEBY	523224.74	407370.92			65847			6 Watts			
Y	20A	TRAFFIC SIGN	LACEBY BYPASS	LACEBY	523224.74	407370.92			65848						
Y	21	TRAFFIC SIGN	LACEBY BYPASS	LACEBY	523295.08	407418.17			65851						
Y	2N	TRAFFIC SIGN	LACEBY BYPASS	LACEBY	521118.65	406128			65830						
Y	3N	TRAFFIC SIGN	LACEBY BYPASS	LACEBY	521138.03	406138			65831						
Y	4N	TRAFFIC SIGN	LACEBY BYPASS	LACEBY	521153.63	406145			65832						
Y	5N	TRAFFIC SIGN	LACEBY BYPASS	LACEBY	521947.01	406458			65833						
Y	6N	TRAFFIC SIGN	LACEBY BYPASS	LACEBY	521958.48	406463			65834						
Y	7	TRAFFIC SIGN	LACEBY BYPASS	LACEBY	522088.5	406521			65835			11 Watts			
Y	8N	TRAFFIC SIGN	LACEBY BYPASS	LACEBY					69997						
Y	9N	TRAFFIC SIGN	LACEBY BYPASS	LACEBY					69998						
Y	1	TRAFFIC SIGN	LACEBY ROUNDABOUT (A18)	LACEBY	520691.97	405874			65852			4 Watts			
Y	1A	TRAFFIC SIGN	LACEBY ROUNDABOUT (A18)	LACEBY	520700.81	405837			65853						
Y	2	TRAFFIC SIGN	LACEBY ROUNDABOUT (A18)	LACEBY	520712.97	405861			65854			14 Watts			
Y	2A	TRAFFIC SIGN	LACEBY ROUNDABOUT (A18)	LACEBY	520676.6	405855			65855						
Y	3	TRAFFIC SIGN	LACEBY ROUNDABOUT (A18)	LACEBY	520700.81	405837			65856			12 Watts			
Y	3A	TRAFFIC SIGN	LACEBY ROUNDABOUT (A18)	LACEBY	520691.97	405874			65857						
Y	4	TRAFFIC SIGN	LACEBY ROUNDABOUT (A18)	LACEBY	520676.6	405855			65858			12 Watts			
Y	4A	TRAFFIC SIGN	LACEBY ROUNDABOUT (A18)	LACEBY	520712.97	405861			65859						
Y	1X	TRAFFIC SIGN	PEAKS LANE ROUNDABOUT AT	NEW WALTHAM	528652.04	404821			66000			4 Watts			
Y	1XA	TRAFFIC SIGN	PEAKS LANE ROUNDABOUT AT	NEW WALTHAM	528652.04	404821			66299						
Y	2X	TRAFFIC SIGN	PEAKS LANE ROUNDABOUT AT	NEW WALTHAM	528651.73	404816.97			66001			4 Watts			
Y	2XA	TRAFFIC SIGN	PEAKS LANE ROUNDABOUT AT	NEW WALTHAM	528651.73	404816.97			66300						
Y	3X	TRAFFIC SIGN	PEAKS LANE ROUNDABOUT AT	NEW WALTHAM	528647.12	404818			66002			4 Watts			
Y	3XA	TRAFFIC SIGN	PEAKS LANE ROUNDABOUT AT	NEW WALTHAM	528647.12	404818			66301						
Y	22N	TRAFFIC SIGN	STATION ROAD WEST	NEW WALTHAM	527675.73	404474.24			69077						
Y	23N	TRAFFIC SIGN	STATION ROAD WEST	NEW WALTHAM	527499.12	404415.13			69078						
Y	24N	TRAFFIC SIGN	STATION ROAD WEST	NEW WALTHAM	527493.96	404413.21			69079						
Y	25N	TRAFFIC SIGN	STATION ROAD WEST	NEW WALTHAM	527468.51	404402.71			69080						
Y	26N	TRAFFIC SIGN	STATION ROAD WEST	NEW WALTHAM	527463.96	404400.88			69081						
Y	27N	TRAFFIC SIGN	STATION ROAD WEST	NEW WALTHAM	527398.28	404382.25			69082						
Y	28N	TRAFFIC SIGN	STATION ROAD WEST	NEW WALTHAM	527394.69	404381.02			69083						
Y	29	TRAFFIC SIGN	STATION ROAD WEST	NEW WALTHAM	527328	404355			66071			4 Watts			
Y	29A	TRAFFIC SIGN	STATION ROAD WEST	NEW WALTHAM	527328	404355			66072						
Y	29B	TRAFFIC SIGN	STATION ROAD WEST	NEW WALTHAM	527328	404355			66073						
Y	30	TRAFFIC SIGN	STATION ROAD WEST	NEW WALTHAM	527325	404363			66074			4 Watts			
Y	30A	TRAFFIC SIGN	STATION ROAD WEST	NEW WALTHAM	527325	404363			66075						
Y	30B	TRAFFIC SIGN	STATION ROAD WEST	NEW WALTHAM	527325	404363			66076						
Y	31	TRAFFIC SIGN	STATION ROAD WEST	NEW WALTHAM	527328	404355			66077			4 Watts			
Y	31A	TRAFFIC SIGN	STATION ROAD WEST	NEW WALTHAM	527328	404355			66078						
Y	32	TRAFFIC SIGN	STATION ROAD WEST	NEW WALTHAM	527325	404363			66079			4 Watts			
Y	32A	TRAFFIC SIGN	STATION ROAD WEST	NEW WALTHAM	527325	404363			66080						
Y	1X	TRAFFIC SIGN	TOLL BAR ROUNDABOUT	NEW WALTHAM	527704.79	404500.71			69067			4 Watts			
Y	1XA	TRAFFIC SIGN	TOLL BAR ROUNDABOUT	NEW WALTHAM	527704.79	404500.71			69063						
Y	2X	TRAFFIC SIGN	TOLL BAR ROUNDABOUT	NEW WALTHAM	527718.55	404488.68			69068			4 Watts			
Y	2XA	TRAFFIC SIGN	TOLL BAR ROUNDABOUT	NEW WALTHAM	527718.55	404488.68			69064						
Y	3X	TRAFFIC SIGN	TOLL BAR ROUNDABOUT	NEW WALTHAM	527708.27	404475.54			69069			4 Watts			
Y	3XA	TRAFFIC SIGN	TOLL BAR ROUNDABOUT	NEW WALTHAM	527708.27	404475.54			69065						

Y	4X	TRAFFIC SIGN	TOLL BAR ROUNDABOUT	NEW WALTHAM	527693.71	404486.78			69070			4 Watts			
Y	4XA	TRAFFIC SIGN	TOLL BAR ROUNDABOUT	NEW WALTHAM	527693.71	404486.78			69066						
Y	1	TRAFFIC SIGN	KILN LANE WEST	STALLINGBOROUGH	520551	413602			66131			11 Watts			
Y	2	TRAFFIC SIGN	KILN LANE WEST	STALLINGBOROUGH	520551.52	413602			66132			3 Watts			
Y	1	TRAFFIC SIGN	LAPORTE ROUNDABOUT	STALLINGBOROUGH	520142.46	413420			66136			14 Watts			
Y	1A	TRAFFIC SIGN	LAPORTE ROUNDABOUT	STALLINGBOROUGH	520127.45	413404			66137						
Y	2	TRAFFIC SIGN	LAPORTE ROUNDABOUT	STALLINGBOROUGH	520147	413437			66138			3 Watts			
Y	2A	TRAFFIC SIGN	LAPORTE ROUNDABOUT	STALLINGBOROUGH	520147	413437			66141						
Y	3	TRAFFIC SIGN	LAPORTE ROUNDABOUT	STALLINGBOROUGH	520167.24	413430			66139			11 Watts			
Y	3A	TRAFFIC SIGN	LAPORTE ROUNDABOUT	STALLINGBOROUGH	520167.24	413430			66142						
Y	2	TRAFFIC SIGN	NEW IMMINGHAM ROAD	STALLINGBOROUGH	520134.73	413451			66143			11 Watts			
Y	1	TRAFFIC SIGN	NORTH MOSS LANE ROUNDABOUT	STALLINGBOROUGH	520565.65	413613			66145			6 Watts			
Y	1A	TRAFFIC SIGN	NORTH MOSS LANE ROUNDABOUT	STALLINGBOROUGH	520565.65	413613			66146						
Y	2	TRAFFIC SIGN	NORTH MOSS LANE ROUNDABOUT	STALLINGBOROUGH	520586.83	413628			66147			3 Watts			
Y	2A	TRAFFIC SIGN	NORTH MOSS LANE ROUNDABOUT	STALLINGBOROUGH	520586.83	413628			66148						
Y	3	TRAFFIC SIGN	NORTH MOSS LANE ROUNDABOUT	STALLINGBOROUGH	520583.05	413610			66149			6 Watts			
Y	3A	TRAFFIC SIGN	NORTH MOSS LANE ROUNDABOUT	STALLINGBOROUGH	520583.05	413610			66150						
Y	1X	TRAFFIC SIGN	RIBY ROAD ROUNDABOUT	STALLINGBOROUGH	519480.22	411310			66152			4 Watts			
Y	1XA	TRAFFIC SIGN	RIBY ROAD ROUNDABOUT	STALLINGBOROUGH	519480.22	411310			66156						
Y	2X	TRAFFIC SIGN	RIBY ROAD ROUNDABOUT	STALLINGBOROUGH	519477.32	411354			66153			6 Watts			
Y	2XA	TRAFFIC SIGN	RIBY ROAD ROUNDABOUT	STALLINGBOROUGH	519477.32	411354			66157						
Y	3X	TRAFFIC SIGN	RIBY ROAD ROUNDABOUT	STALLINGBOROUGH	519537.27	411349			66154			4 Watts			
Y	3XA	TRAFFIC SIGN	RIBY ROAD ROUNDABOUT	STALLINGBOROUGH	519537.27	411349			66158						
Y	4X	TRAFFIC SIGN	RIBY ROAD ROUNDABOUT	STALLINGBOROUGH	519524.76	411306			66155			4 Watts			
Y	4XA	TRAFFIC SIGN	RIBY ROAD ROUNDABOUT	STALLINGBOROUGH	519524.76	411306			66159						
Y	1	TRAFFIC SIGN	SCM ACCESS ROAD SHBILR	STALLINGBOROUGH	521749.3	414366			66160			11 Watts			
Y	2	TRAFFIC SIGN	SCM ACCESS ROAD SHBILR	STALLINGBOROUGH	521754.29	414366			66161			11 Watts			
Y	3	TRAFFIC SIGN	SCM ACCESS ROAD SHBILR	STALLINGBOROUGH	521774.79	414370			66162			6 Watts			
Y	1	TRAFFIC SIGN	SCM ROUNDABOUT SHBILR	STALLINGBOROUGH	521714.67	414357			66163			6 Watts			
Y	1A	TRAFFIC SIGN	SCM ROUNDABOUT SHBILR	STALLINGBOROUGH	521714.67	414357			66169						
Y	2	TRAFFIC SIGN	SCM ROUNDABOUT SHBILR	STALLINGBOROUGH	521726.49	414366			66164			14 Watts			
Y	2A	TRAFFIC SIGN	SCM ROUNDABOUT SHBILR	STALLINGBOROUGH	521726.49	414366			66170						
Y	3	TRAFFIC SIGN	SCM ROUNDABOUT SHBILR	STALLINGBOROUGH	521738.66	414355			66165			6 Watts			
Y	3A	TRAFFIC SIGN	SCM ROUNDABOUT SHBILR	STALLINGBOROUGH	521738.66	414355			66167						
Y	4	TRAFFIC SIGN	SCM ROUNDABOUT SHBILR	STALLINGBOROUGH	521727.55	414340			66166			6 Watts			
Y	4A	TRAFFIC SIGN	SCM ROUNDABOUT SHBILR	STALLINGBOROUGH	521727.55	414340			66168						
Y	1	TRAFFIC SIGN	STALLINGBOROUGH I/C	STALLINGBOROUGH	519404.16	412812.28			66191			20 Watts			
Y	2	TRAFFIC SIGN	STALLINGBOROUGH I/C	STALLINGBOROUGH	519429.45	412833.5			66192			11 Watts			
Y	1	TRAFFIC SIGN	WEST PARADE	GRIMSBY	526281.46	409234.16			65067			3 Watts			
Y	1A	TRAFFIC SIGN	WEST PARADE	GRIMSBY	526281.46	409234.16			65068						
Y	1	TRAFFIC SIGN	KINGS ROAD	CLEETHORPES	531405.87	407930			63316			11 Watts			
Y	10N	TRAFFIC SIGN	KINGS ROAD	CLEETHORPES					67843						
Y	11	TRAFFIC SIGN	KINGS ROAD	CLEETHORPES	531668.7	407471.34			63326			11 Watts			
Y	12	TRAFFIC SIGN	KINGS ROAD	CLEETHORPES	531686.09	407454.86			63327			11 Watts			
Y	13	TRAFFIC SIGN	KINGS ROAD	CLEETHORPES	531699.74	407447.24			63328			11 Watts			
Y	14	TRAFFIC SIGN	KINGS ROAD	CLEETHORPES	531707.48	407407.21			63329			11 Watts			
Y	15	TRAFFIC SIGN	KINGS ROAD	CLEETHORPES	531708.05	407403.64			63330			11 Watts			
Y	16	TRAFFIC SIGN	KINGS ROAD	CLEETHORPES	531727.63	407372.44			63331			11 Watts			
Y	17	TRAFFIC SIGN	KINGS ROAD	CLEETHORPES	531727.34	407369.37			63332			11 Watts			
Y	18N	TRAFFIC SIGN	KINGS ROAD	CLEETHORPES					68615						
Y	19N	TRAFFIC SIGN	KINGS ROAD	CLEETHORPES					68898						
Y	20	TRAFFIC SIGN	KINGS ROAD	CLEETHORPES	531780.93	407258			63335			4 Watts			
Y	21	TRAFFIC SIGN	KINGS ROAD	CLEETHORPES	531784.24	407227			63336			11 Watts			
Y	22N	TRAFFIC SIGN	KINGS ROAD	CLEETHORPES					68118						
Y	23N	TRAFFIC SIGN	KINGS ROAD	CLEETHORPES					68119						
Y	24	TRAFFIC SIGN	KINGS ROAD	CLEETHORPES	531831.09	407177.5			63340			7 Watts			
Y	25	TRAFFIC SIGN	KINGS ROAD	CLEETHORPES	531843.75	407147.5			63341			11 Watts			
Y	26	TRAFFIC SIGN	KINGS ROAD	CLEETHORPES	531848.59	407140.47			63342			11 Watts			
Y	27	TRAFFIC SIGN	KINGS ROAD	CLEETHORPES	531871.57	407111.25			63343			3 Watts			
Y	28	TRAFFIC SIGN	KINGS ROAD	CLEETHORPES	531877.66	407104.69			63344			3 Watts			
Y	29	TRAFFIC SIGN	KINGS ROAD	CLEETHORPES	531991.71	406994.54			63345			3 Watts			
Y	2N	TRAFFIC SIGN	KINGS ROAD	CLEETHORPES	531500	407760			63317						
Y	30N	TRAFFIC SIGN	KINGS ROAD	CLEETHORPES	531997.95	406991.49			63346			4 Watts			
Y	31	TRAFFIC SIGN	KINGS ROAD	CLEETHORPES	532282.73	406349			63347			11 Watts			
Y	32	TRAFFIC SIGN	KINGS ROAD	CLEETHORPES	532284.81	406345			63348			6 Watts			
Y	3N	TRAFFIC SIGN	KINGS ROAD	CLEETHORPES	531537.54	407672.9			63318						
Y	4N	TRAFFIC SIGN	KINGS ROAD	CLEETHORPES	531582.5	407580.5			63319						
Y	5	TRAFFIC SIGN	KINGS ROAD	CLEETHORPES	531597.4	407576.34			63320			3 Watts			
Y	6N	TRAFFIC SIGN	KINGS ROAD	CLEETHORPES	531593.3	407564.44			63321						
Y	7N	TRAFFIC SIGN	KINGS ROAD	CLEETHORPES					67841						
Y	8N	TRAFFIC SIGN	KINGS ROAD	CLEETHORPES					67842						
Y	9	TRAFFIC SIGN	KINGS ROAD	CLEETHORPES	531664.1	407493			63324			3 Watts			
Y	1	TRAFFIC SIGN	LOUTH ROAD (CUL DE SAC)	NEW WALTHAM	527472.83	404912			65975			6 Watts			
Y	29	TRAFFIC SIGN	PEAKS PARKWAY FROM PEAKS FARM	NEW WALTHAM	527872	406941			66025			3 Watts			
Y	30	TRAFFIC SIGN	PEAKS PARKWAY FROM PEAKS FARM	NEW WALTHAM	527865	406939			66026			3 Watts			
Y	31	TRAFFIC SIGN	PEAKS PARKWAY FROM PEAKS FARM	NEW WALTHAM	527872	406941			66027			3 Watts			
Y	32	TRAFFIC SIGN	PEAKS PARKWAY FROM PEAKS FARM	NEW WALTHAM	527865	406939			66028			3 Watts			
Y	33N	TRAFFIC SIGN	PEAKS PARKWAY FROM PEAKS FARM	NEW WALTHAM	528175.25	405820.94			69143						
Y	34N	TRAFFIC SIGN	PEAKS PARKWAY FROM PEAKS FARM	NEW WALTHAM	528175.97	405808.53			69144						
Y	35	TRAFFIC SIGN	PEAKS PARKWAY FROM PEAKS FARM	NEW WALTHAM	528194.86	405748.93			66031			11 Watts			
Y	36	TRAFFIC SIGN	PEAKS PARKWAY FROM PEAKS FARM	NEW WALTHAM	528201.25	405739.59			66032			3 Watts			
Y	37	TRAFFIC SIGN	PEAKS PARKWAY FROM PEAKS FARM	NEW WALTHAM	528188.36	405734.74			66033			4 Watts			
Y	38	TRAFFIC SIGN	PEAKS PARKWAY FROM PEAKS FARM	NEW WALTHAM	528187.16	405704.46			66034			11 Watts			
Y	39	TRAFFIC SIGN	PEAKS PARKWAY FROM PEAKS FARM	NEW WALTHAM	528171.49	405695.93			66035			11 Watts			
Y	40	TRAFFIC SIGN	PEAKS PARKWAY FROM PEAKS FARM	NEW WALTHAM	527657.5	405078.82			66036			11 Watts			
Y	41	TRAFFIC SIGN	PEAKS PARKWAY FROM PEAKS FARM	NEW WALTHAM	527598.07	404964.39			66037			11 Watts			
Y	42	TRAFFIC SIGN	PEAKS PARKWAY FROM PEAKS FARM	NEW WALTHAM	527609.75	404958.94			66038			11 Watts			
Y	43	TRAFFIC SIGN	PEAKS PARKWAY FROM PEAKS FARM	NEW WALTHAM	527604.92	404929.3			66039			14 Watts			
Y	44	TRAFFIC SIGN	PEAKS PARKWAY FROM PEAKS FARM	NEW WALTHAM	527586.05	404931.56			66040			4 Watts			
Y	45	TRAFFIC SIGN	PEAKS PARKWAY FROM PEAKS FARM	NEW WALTHAM	527586.05	404931.56			66041			4 Watts			
Y	46	TRAFFIC SIGN	PEAKS PARKWAY FROM PEAKS FARM	NEW WALTHAM	527604.92	404929.3			66042			4 Watts			
Y	47	TRAFFIC SIGN	PEAKS PARKWAY FROM PEAKS FARM	NEW WALTHAM	527593.64	404923.01			66043			11 Watts			
Y	48N	TRAFFIC SIGN	PEAKS PARKWAY FROM PEAKS FARM	NEW WALTHAM	527589.73	404911			66044						
Y	1	TRAFFIC SIGN	WESTSIDE ROAD	GRIMSBY DOCKS	526247	410684			65126			11 Watts			
Y	2N	TRAFFIC SIGN	WESTSIDE ROAD	GRIMSBY DOCKS	526252.45	410688			65127						
Y	3N	TRAFFIC SIGN	WESTSIDE ROAD	GRIMSBY DOCKS					69783						
Y	1	STREET LIGHTING	ACORN COURT	CLEETHORPES	529751.31	406840.28	2019	28/01/2019	67274	Urbis	Axia 16 LED 350mA	19 Watts	6.00 Metres	Steel	
Y	2	STREET LIGHTING	ACORN COURT	CLEETHORPES	529740.47	406823.59	2013		42727	WRTL	Other	27 Watts	6.00 Metres	Steel	
Y	1	STREET LIGHTING	ANDERBY DRIVE	GRIMSBY	523995.67	409638.7	2010		43212	Urbis	Axia 16 LED 350mA	19 Watts	6.00 Metres	Steel	
Y	2	STREET LIGHTING	ANDERBY DRIVE	GRIMSBY	523995.89	409607.55	2010		43213	Urbis	Axia 16 LED 350mA	19 Watts	6.00 Metres	Steel	
Y	3	STREET LIGHTING	ANDERBY DRIVE	GRIMSBY	524016.66	409585.38	2010		43214	Urbis	Axia 16 LED 350mA	19 Watts	6.00 Metres	Steel	
Y	4	STREET LIGHTING	ANDERBY DRIVE	GRIMSBY	524028.99	409553.79	2010		43215	Urbis	Axia 16 LED 350mA	19 Watts	6.00 Metres	Steel	
Y	5	STREET LIGHTING	ANDERBY DRIVE	GRIMSBY	524041.1	409522.21	2010		43216	Urbis	Axia 16 LED 350mA	19 Watts	6.00 Metres	Steel	
Y	6	STREET LIGHTING	ANDERBY DRIVE	GRIMSBY	524046.51	409490.84	2010		43217	Urbis	Axia 16 LED 350mA	19 Watts	6.00 Metres	Steel	
Y	7	STREET LIGHTING	ANDERBY DRIVE	GRIMSBY	524042.62	409459.37	2010		43218	Urbis	Axia 16 LED 350mA	19 Watts	6.00 Metres	Steel	
Y	8	STREET LIGHTING	ANDERBY DRIVE	GRIMSBY	524028.56	409428.21	2010		43219	Urbis	Axia 16 LED 350mA	19 Watts	6.00 Metres	Steel	
Y	9	STREET LIGHTING	ANDERBY DRIVE	GRIMSBY	524004.4	409401.57	2010		43220	Urbis	Axia 16 LED 350mA	19 Watts	6.00 Metres	Steel	
Y	10	STREET LIGHTING	ANDERBY DRIVE	GRIMSBY	523976.09	409377.33	2010		43221	Urbis	Axia 16 LED 350mA	19 Watts	6.00 Metres	Steel	
Y	11	STREET LIGHTING	ANDERBY DRIVE	GRIMSBY	523954.9	409358.67	2010		43222	Urbis	Axia 16 LED 350mA	19 Watts	6.00 Metres	Steel	
Y	12	STREET LIGHTING	ANDERBY DRIVE	GRIMSBY	523925.58	409342.98	2010		43223	Urbis	Axia 16 LED 350mA	19 Watts	6.00 Metres	Steel	

Y	13	STREET LIGHTING	ANDERBY DRIVE	GRIMSBY	523885.13	409352.28	2010		43224	Urbis	Axia 16 LED 350mA	19 Watts	6.00 Metres	Steel	
Y	14	STREET LIGHTING	ANDERBY DRIVE	GRIMSBY	523870.34	409384.86	2010		43225	Urbis	Axia 16 LED 350mA	19 Watts	6.00 Metres	Steel	
Y	15	STREET LIGHTING	ANDERBY DRIVE	GRIMSBY	523846.84	409412.03	2010		43226	Urbis	Axia 16 LED 350mA	19 Watts	6.00 Metres	Steel	
Y	16	STREET LIGHTING	ANDERBY DRIVE	GRIMSBY	523825.19	409437.23	2010		43227	Urbis	Axia 16 LED 350mA	19 Watts	6.00 Metres	Steel	
Y	1	STREET LIGHTING	ASHBY CLOSE	GRIMSBY	523785.15	409709.94	2020	09/07/2020	67882	Urbis	Axia 16 LED 350mA	19 Watts	6.00 Metres	Galvanised Steel	
Y	2	STREET LIGHTING	ASHBY CLOSE	GRIMSBY	523776.19	409691.1	2020	09/07/2020	67990	Urbis	Axia 16 LED 350mA	19 Watts	6.00 Metres	Galvanised Steel	
Y	3	STREET LIGHTING	ASHBY CLOSE	GRIMSBY	523750.46	409680.53	2020	09/07/2020	67991	Urbis	Axia 16 LED 350mA	19 Watts	6.00 Metres	Galvanised Steel	
Y	4	STREET LIGHTING	ASHBY CLOSE	GRIMSBY	523729.25	409651.02	2020	09/07/2020	67992	Urbis	Teceo 24 LED 500mA	40 Watts	6.00 Metres	Galvanised Steel	
Y	5	STREET LIGHTING	ASHBY CLOSE	GRIMSBY	523698.09	409670.27	2014		43407	Urbis	Axia 16 LED 350mA	19 Watts	6.00 Metres	Galvanised Steel	
Y	6	STREET LIGHTING	ASHBY CLOSE	GRIMSBY	523728.6	409633.45	1963		43408	Urbis	Axia 16 LED 350mA	19 Watts	5.00 Metres	Galvanised Steel	
Y	1	STREET LIGHTING	BARMOUTH DRIVE	GRIMSBY	524050.26	409672.22	2020	07/08/2020	67979	Urbis	Axia 16 LED 350mA	19 Watts	6.00 Metres	Galvanised Steel	
Y	2	STREET LIGHTING	BARMOUTH DRIVE	GRIMSBY	524068.16	409652.27	2005		43697	Urbis	Axia 16 LED 350mA	19 Watts	6.00 Metres	Stainless Steel	
Y	3	STREET LIGHTING	BARMOUTH DRIVE	GRIMSBY	524087.75	409630.96	2003		43698	Urbis	Axia 16 LED 350mA	19 Watts	6.00 Metres	Stainless Steel	
Y	1	STREET LIGHTING	BOWFIELD CLOSE	GRIMSBY	523828.41	409791.91	2020	10/06/2020	67857	Urbis	Axia 16 LED 350mA	19 Watts	6.00 Metres	Galvanised Steel	
Y	2	STREET LIGHTING	BOWFIELD CLOSE	GRIMSBY	523854.67	409775.08	2020	10/06/2020	68033	Urbis	Axia 16 LED 350mA	19 Watts	6.00 Metres	Galvanised Steel	
Y	3	STREET LIGHTING	BOWFIELD CLOSE	GRIMSBY	523866.09	409775.08	2020	10/06/2020	68034	Urbis	Axia 16 LED 350mA	19 Watts	6.00 Metres	Galvanised Steel	
Y	4	STREET LIGHTING	BOWFIELD CLOSE	GRIMSBY	523881.63	409730.26	1991		44443	Urbis	Axia 16 LED 350mA	19 Watts	6.00 Metres	Galvanised Steel	
Y	1	STREET LIGHTING	CALVER CRESCENT	GRIMSBY	523994.38	409567.19	2010		45113	Urbis	Axia 16 LED 350mA	19 Watts	6.00 Metres	Steel	
Y	2	STREET LIGHTING	CALVER CRESCENT	GRIMSBY	523958.29	409557.36	2010		45114	Urbis	Axia 16 LED 350mA	19 Watts	6.00 Metres	Steel	
Y	3	STREET LIGHTING	CALVER CRESCENT	GRIMSBY	523941.83	409535.5	2010		45115	Urbis	Axia 16 LED 350mA	19 Watts	6.00 Metres	Steel	
Y	4	STREET LIGHTING	CALVER CRESCENT	GRIMSBY	523937.32	409504.56	2010		45116	Urbis	Axia 16 LED 350mA	19 Watts	6.00 Metres	Steel	
Y	5	STREET LIGHTING	CALVER CRESCENT	GRIMSBY	523925.11	409472.42	2010		45117	Urbis	Axia 16 LED 350mA	19 Watts	6.00 Metres	Steel	
Y	6	STREET LIGHTING	CALVER CRESCENT	GRIMSBY	523916.32	409440.89	2010		45118	Urbis	Axia 16 LED 350mA	19 Watts	6.00 Metres	Steel	
Y	7	STREET LIGHTING	CALVER CRESCENT	GRIMSBY	523932.01	409415.96	2010		45119	Urbis	Axia 16 LED 350mA	19 Watts	6.00 Metres	Steel	
Y	8	STREET LIGHTING	CALVER CRESCENT	GRIMSBY	523954.15	409390.17	2010		45120	Urbis	Axia 16 LED 350mA	19 Watts	6.00 Metres	Steel	
Y	1	STREET LIGHTING	CROSLAND ROAD	GRIMSBY	524009.73	409682.12	2014		47081	1 Urbis LED	Teceo 48 LED 500mA	79 Watts	8.00 Metres	Galvanised Steel	
Y	2	STREET LIGHTING	CROSLAND ROAD	GRIMSBY	523989.11	409706.88	1966		47082	Urbis	Axia 16 LED 350mA	19 Watts	8.00 Metres	Steel	
Y	3	STREET LIGHTING	CROSLAND ROAD	GRIMSBY	523966.09	409734.41	1966		47083	Urbis	Axia 16 LED 350mA	19 Watts	8.00 Metres	Steel	
Y	4	STREET LIGHTING	CROSLAND ROAD	GRIMSBY	523957.44	409757.24	1966		47084	Urbis	Axia 16 LED 350mA	19 Watts	8.00 Metres	Steel	
Y	5	STREET LIGHTING	CROSLAND ROAD	GRIMSBY	523930.32	409774	2008		47085	Urbis	Axia 16 LED 350mA	19 Watts	8.00 Metres	Steel	
Y	6	STREET LIGHTING	CROSLAND ROAD	GRIMSBY	523916.2	409805.93	1966		47086	Urbis	Axia 16 LED 350mA	19 Watts	8.00 Metres	Steel	
Y	7	STREET LIGHTING	CROSLAND ROAD	GRIMSBY	523893.74	409819.56	1966		47087	Urbis	Axia 16 LED 350mA	19 Watts	8.00 Metres	Steel	
Y	8	STREET LIGHTING	CROSLAND ROAD	GRIMSBY	523876.43	409843.4	1966		47088	Urbis	Axia 16 LED 350mA	19 Watts	8.00 Metres	Steel	
Y	1	STREET LIGHTING	ESKDALE WAY	GRIMSBY	523865.45	409869.51	1963		48059	Urbis	Axia 16 LED 350mA	19 Watts	5.00 Metres	Steel	
Y	2	STREET LIGHTING	ESKDALE WAY	GRIMSBY	523892.15	409872.17	1972		48060	Urbis	Axia 8 LED 350mA	10 Watts	5.00 Metres	Galvanised Steel	
Y	3	STREET LIGHTING	ESKDALE WAY	GRIMSBY	523914.92	409886.25	2003		48061	Urbis	Axia 16 LED 350mA	19 Watts	6.00 Metres	Stainless Steel	
Y	4	STREET LIGHTING	ESKDALE WAY	GRIMSBY	523932.99	409911.81	2009		48062	Urbis	Axia 16 LED 350mA	19 Watts	6.00 Metres	Steel	
Y	5	STREET LIGHTING	ESKDALE WAY	GRIMSBY	523914.61	409844.19	2013		48063	Urbis	Axia 8 LED 350mA	10 Watts	6.00 Metres	Steel	
Y	6	STREET LIGHTING	ESKDALE WAY	GRIMSBY	523935.24	409857.08	2002		48064	Urbis	Axia 8 LED 350mA	10 Watts	6.00 Metres	Galvanised Steel	
Y	7	STREET LIGHTING	ESKDALE WAY	GRIMSBY	523968.56	409877.79	1972		48065	Urbis	Axia 8 LED 350mA	10 Watts	6.00 Metres	Galvanised Steel	
Y	8	STREET LIGHTING	ESKDALE WAY	GRIMSBY	523995.95	409902	2003		48066	Urbis	Axia 8 LED 350mA	10 Watts	6.00 Metres	Stainless Steel	
Y	9	STREET LIGHTING	ESKDALE WAY	GRIMSBY	523965.15	409898.33	2013		48067	Urbis	Axia 8 LED 350mA	10 Watts	6.00 Metres	Galvanised Steel	
Y	10	STREET LIGHTING	ESKDALE WAY	GRIMSBY	523955.81	409928.03	1996		48068	Urbis	Axia 8 LED 350mA	10 Watts	6.00 Metres	Galvanised Steel	
Y	11	STREET LIGHTING	ESKDALE WAY	GRIMSBY	523966.35	409943.24	1963		48069	Urbis	Axia 8 LED 350mA	10 Watts	5.00 Metres	Aluminium	
Y	12	STREET LIGHTING	ESKDALE WAY	GRIMSBY	523993.6	409966.16	2012		48070	Urbis	Axia 8 LED 350mA	10 Watts	6.00 Metres	Steel	
Y	13	STREET LIGHTING	ESKDALE WAY	GRIMSBY	523886.63	409905.78	1963		48071	Urbis	Axia 8 LED 350mA	10 Watts	5.00 Metres	Galvanised Steel	
Y	14	STREET LIGHTING	ESKDALE WAY	GRIMSBY	523942.42	409888.74	1963		48072	Urbis	Axia 8 LED 350mA	10 Watts	5.00 Metres	Aluminium	
Y	1	STREET LIGHTING	GLENFIELD ROAD	GRIMSBY	523853.39	409841.84	1965		49311	Urbis	Axia 16 LED 350mA	19 Watts	8.00 Metres	Steel	
Y	2	STREET LIGHTING	GLENFIELD ROAD	GRIMSBY				02/06/2025	70210	Urbis	Teceo 16 LED 500mA	25 Watts	8.00 Metres	Galvanised Steel	
Y	3	STREET LIGHTING	GLENFIELD ROAD	GRIMSBY	523813.81	409811.55	1965		49313	Urbis	Axia 16 LED 350mA	19 Watts	8.00 Metres	Steel	
Y	5	STREET LIGHTING	GLENFIELD ROAD	GRIMSBY	523764.3	409769.4	2008		49315	Urbis	Axia 16 LED 350mA	19 Watts	8.00 Metres	Steel	
Y	6	STREET LIGHTING	GLENFIELD ROAD	GRIMSBY	523737.47	409748.49	2020	02/06/2020	67859	Urbis	Axia 16 LED 350mA	19 Watts	6.00 Metres	Galvanised Steel	
Y	7	STREET LIGHTING	GLENFIELD ROAD	GRIMSBY	523722.3	409723.64	1968		49317	Urbis	Axia 16 LED 350mA	19 Watts	5.00 Metres	Steel	
Y	8	STREET LIGHTING	GLENFIELD ROAD	GRIMSBY	523691.59	409709.59	2020	02/06/2020	68035	Urbis	Teceo 24 LED 500mA	40 Watts	6.00 Metres	Galvanised Steel	
Y	1	STREET LIGHTING	SERVICE ROAD 24	GRIMSBY	523982.24	409748.85	2002		57069	Urbis	Axia 24 LED 540mA	26 Watts	8.00 Metres	Stainless Steel	
Y	2	STREET LIGHTING	SERVICE ROAD 24	GRIMSBY	523997.46	409760.89	2020	10/08/2020	67987	Urbis	Axia 24 LED 540mA	26 Watts	8.00 Metres	Galvanised Steel	
Y	3	STREET LIGHTING	SERVICE ROAD 24	GRIMSBY	524013.19	409771.29	2002		57070	1 Urbis LED	Axia 16 LED 500mA	28 Watts	6.00 Metres	Stainless Steel	
Y	4	STREET LIGHTING	SERVICE ROAD 24	GRIMSBY	523986.71	409796.77	2002		57071	1 Urbis LED	Axia 16 LED 500mA	28 Watts	8.00 Metres	Stainless Steel	
Y	1	STREET LIGHTING	WINGATE PARADE CAR PARK	GRIMSBY	524002.49	409714.27	2020	10/08/2020	67984	Urbis	Axia 24 LED 540mA	26 Watts	8.00 Metres	Galvanised Steel	
Y	2	STREET LIGHTING	WINGATE PARADE CAR PARK	GRIMSBY	524022.81	409731.76	2020	10/08/2020	68252	Urbis	Axia 24 LED 540mA	26 Watts	8.00 Metres	Galvanised Steel	
Y	1	STREET LIGHTING	GRASBY CRESCENT	GRIMSBY	523920.81	409330.52	2010		49515	Urbis	Axia 16 LED 350mA	19 Watts	6.00 Metres	Steel	
Y	2	STREET LIGHTING	GRASBY CRESCENT	GRIMSBY	523899.41	409305.31	2010		49516	Urbis	Axia 16 LED 350mA	19 Watts	6.00 Metres	Steel	
Y	3	STREET LIGHTING	GRASBY CRESCENT	GRIMSBY	523870.44	409288.45	2010		49517	Urbis	Axia 16 LED 350mA	19 Watts	6.00 Metres	Steel	
Y	4	STREET LIGHTING	GRASBY CRESCENT	GRIMSBY	523847.09	409304.9	2010		49518	Urbis	Axia 16 LED 350mA	19 Watts	6.00 Metres	Steel	
Y	5	STREET LIGHTING	GRASBY CRESCENT	GRIMSBY	523825.49	409329.9	2010		49519	Urbis	Axia 16 LED 350mA	19 Watts	6.00 Metres	Steel	
Y	6	STREET LIGHTING	GRASBY CRESCENT	GRIMSBY	523808.27	409353.2	2010		49520	Urbis	Axia 16 LED 350mA	19 Watts	6.00 Metres	Steel	
Y	7	STREET LIGHTING	GRASBY CRESCENT	GRIMSBY	523813.17	409374.49	2010		49521	Urbis	Axia 16 LED 350mA	19 Watts	6.00 Metres	Steel	
Y	8	STREET LIGHTING	GRASBY CRESCENT	GRIMSBY	523842.35	409386.6	2010		49522	Urbis	Axia 16 LED 350mA	19 Watts	6.00 Metres	Steel	
Y	1	STREET LIGHTING	GRAYLING CLOSE	GRIMSBY	523999.98	409430.84	2010		49525	Urbis	Axia 16 LED 350mA	19 Watts	6.00 Metres	Steel	
Y	2	STREET LIGHTING	GRAYLING CLOSE	GRIMSBY	523977.13	409457.2	2010		49526	Urbis	Axia 16 LED 350mA	19 Watts	6.00 Metres	Steel	
Y	1	STREET LIGHTING	LARMOUR ROAD	GRIMSBY	523739.77	409397.49	1966		52359	1 Urbis LED	Teceo 48 LED 500mA	79 Watts	8.00 Metres	Steel	
Y	2	STREET LIGHTING	LARMOUR ROAD	GRIMSBY	523774.75	409410.74	1999		52360	1 Urbis LED	Teceo 48 LED 500mA	79 Watts	8.00 Metres	Galvanised Steel	
Y	3	STREET LIGHTING	LARMOUR ROAD	GRIMSBY	523792.98	409428.88	1966		52361	1 Urbis LED	Teceo 48 LED 500mA	79 Watts	8.00 Metres	Steel	
Y	4	STREET LIGHTING	LARMOUR ROAD	GRIMSBY	523802.04	409453.64	2008		52362	1 Urbis LED	Teceo 48 LED 500mA	79 Watts	8.00 Metres	Steel	
Y	5	STREET LIGHTING	LARMOUR ROAD	GRIMSBY	523846.19	409473.44	1996		52363	1 Urbis LED	Teceo 48 LED 500mA	79 Watts	8.00 Metres	Galvanised Steel	
Y	6	STREET LIGHTING	LARMOUR ROAD	GRIMSBY	523860.36	409493.89	2003		52364	1 Urbis LED	Teceo 48 LED 500mA	79 Watts	8.00 Metres	Stainless Steel	
Y	7	STREET LIGHTING	LARMOUR ROAD	GRIMSBY	523871.16	409522.55	2024	07/06/2024	69907	Urbis	Teceo 48 LED 500mA	79 Watts	8.00 Metres	Galvanised Steel	
Y	8	STREET LIGHTING	LARMOUR ROAD	GRIMSBY	523875.91	409553.68	2024	07/06/2024	69908	Urbis	Teceo 48 LED 500mA	79 Watts	8.00 Metres	Galvanised Steel	
Y	9	STREET LIGHTING	LARMOUR ROAD	GRIMSBY	523874.56	409586.61	2003		52367	1 Urbis LED	Teceo 48 LED 500mA	79 Watts	8.00 Metres	Stainless Steel	
Y	10	STREET LIGHTING	LARMOUR ROAD	GRIMSBY	523860.92	409599.37	1966		52368	1 Urbis LED	Teceo 48 LED 500mA	79 Watts	8.00 Metres	Steel	
Y	11	STREET LIGHTING	LARMOUR ROAD	GRIMSBY	523857.97	409634.26	1966		52369	1 Urbis LED	Teceo 48 LED 500mA	79 Watts	8.00 Metres	Steel	
Y	12	STREET LIGHTING	LARMOUR ROAD	GRIMSBY	523862.2	409663.26	1966		52370	1 Urbis LED	Teceo 48 LED 500mA	79 Watts	8.00 Metres	Steel	
Y	13	STREET LIGHTING	LARMOUR ROAD	GRIMSBY	523836.85	409679.44	2008		52371	1 Urbis LED	Teceo 48 LED 500mA	79 Watts	8.00 Metres	Steel	
Y	14	STREET LIGHTING	LARMOUR ROAD	GRIMSBY	523824.83	409708.37	1966		52372	1 Urbis LED	Teceo 48 LED 500mA	79 Watts	8.00 Metres	Steel	
Y	15	STREET LIGHTING	LARMOUR ROAD	GRIMSBY	523807.34	409731.3	2007		52373	1 Urbis LED	Teceo 48 LED 500mA	79 Watts	8.00 Metres	Steel	
Y	16	STREET LIGHTING	LARMOUR ROAD	GRIMSBY	523777.51	409750.17	1999		52374	1 Urbis LED	Teceo 48 LED 500mA	79 Watts	8.00 Metres	Galvanised Steel	
Y	1	STREET LIGHTING	MERSEY WAY	GRIMSBY	524004.2	409843.32	2007		53554	Urbis	Axia 16 LED 350mA	19 Watts	6.00 Metres	Steel	
Y	2	STREET LIGHTING	MERSEY WAY	GRIMSBY	524027.4	409862.28	1995		53555	Urbis	Axia 16 LED 350mA	19 Watts	5.00 Metres	Galvanised Steel	
Y	3	STREET LIGHTING	MERSEY WAY	GRIMSBY	523979.71	409858.97	1963		53556	Urbis	Axia 8 LED 350mA	10 Watts	5.00 Metres	Galvanised Steel	
Y	4	STREET LIGHTING	MERSEY WAY	GRIMSBY	524009.54	409884.1	1963		53557	Urbis	Axia 8 LED 350mA	10 Watts	5.00 Metres	Steel	
Y	1	STREET LIGHTING	MINNOW CLOSE	GRIMSBY	523956.72	409493.04	2010		53748	Urbis	Axia 16 LED 350mA	19 Watts	6.00 Metres	Steel	
Y	2	STREET LIGHTING	MINNOW CLOSE	GRIMSBY	523984.2	409482.07	2010		53749	Urbis	Axia 16 LED 350mA	19 Watts	6.00 Metres	Steel	
Y	1	STREET LIGHTING	NEWBURY TERRACE	GREAT COATES	524033.65	410479.69	1985		54087	Urbis	Axia 16 LED 350mA	19 Watts	6.00 Metres	Galvanised Steel	
Y	2	STREET LIGHTING	NEWBURY TERRACE	GREAT COATES	524055.93	410445.53	1985		54088	Urbis	Axia 16 LED 350mA	19 Watts	6.00 Metres	Galvanised Steel	
Y	3	STREET LIGHTING	NEWBURY TERRACE	GREAT COATES	524071.22	410407.88	1985		54089	Urbis	Axia 16 LED 350mA	19 Watts	6.00 Metres	Galvanised Steel	
Y	4	STREET LIGHTING	NEWBURY TERRACE	GREAT COATES	524090	410397.29	1985		54090	Urbis	Axia 16 LED 350mA	19 Watts	6.00 Metres	Galvanised Steel	
Y	1	STREET LIGHTING	SEVERN WAY	GRIMSBY	524025.72	409805.59	2013		57079	Urbis	Axia 8 LED 350mA	10 Watts	6.00 Metres	Steel	
Y	2	STREET LIGHTING	SEVERN WAY	GRIMSBY	524056.02	409829.41	2013		57080	Urbis	Axia 8 LED 350mA	10 Watts	6.00 Metres	Steel	
Y	3	STREET LIGHTING	SEVERN WAY	GRIMSBY	524082.89	409855.04	1996		57081	Urbis	Axia 8 LED 350mA	10 Watts	5.00 Metres	Galvanised Steel	
Y	4	STREET LIGHTING	SEVERN WAY	GRIMSBY	524028.94	409836.17	2009		57082	Urbis	Axia 8 LED 350mA	10 Watts	6.00 Metres	Steel	
Y	1	STREET LIGHTING	STOW CLOSE	GRIMSBY	523934.09	409744.03	2020	10/06/2020	67860	Urbis	Axia 16 LED 350mA	19 Watts	6.00 Metres	Galvanised Steel	
Y	2	STREET LIGHTING	STOW CLOSE	GRIMSBY	523910.63	409724.41	2020	10/06/2020	68036	Urbis	Axia 16 LED 350mA	19 Watts	6.00 Metres	Galvanised Steel	
Y	3	STREET LIGHTING	STOW CLOSE	GRIMSBY	523899.26	409707.81	1975		58509	Urbis	Axia 16 LED 350mA	19 Watts	5.00 Metres	Galvanised Steel	
Y	1	STREET LIGHTING	TYNE WAY	GRIMSBY	524199.33	409909.96	1963		59501	Urbis	Axia 8 LED 350mA	10 Watts	5.00 Metres	Aluminium	
Y	2	STREET LIGHTING	TYNE WAY	GRIMSBY	524205.22	409931.41	1963		59503	Urbis	Axia 8 LED 350mA	10 Watts	5.00 Metres	Aluminium	
Y	1	STREET LIGHTING	WABY CLOSE	GRIMSBY	523766.82	409434.59	2020	28/05/2020	67854	Urbis	Axia 16 LED 350mA	19 Watts	6.00 Metres	Galvanised Steel	
Y	2	STREET LIGHTING	WABY CLOSE	GRIMSBY	523743.01	409447.77	1993		59656	Urbis	Axia 16 LED 350mA	19 Watts	6.00 Metres	Galvanised Steel	
Y	3	STREET LIGHTING	WABY CLOSE	GRIMSBY	523727.91	409474.84	1963		59657	Urbis	Axia 16 LED 350mA	19 Watts	5.00 Metres	Steel	
Y	4	STREET LIGHTING	WABY CLOSE	GRIMSBY	523736.61	409504.69	2020	28/05/2020	68037	Urbis	Axia 16 LED 350mA	19 Watts	6.00 Metres	Galvanised Steel	
Y	5	STREET LIGHTING	WABY CLOSE	GRIMSBY	523767.19	409522.39	2020	28/05/2020	68038	Urbis	Axia 16 LED 350mA	19 Watts	6.00 Metres	Galvanised Steel	

Y	6	STREET LIGHTING	WABY CLOSE	GRIMSBY	523782.96	409549.22	1963		59660	Urbis	Axia 16 LED 350mA	19 Watts	6.00 Metres	Steel	
Y	7	STREET LIGHTING	WABY CLOSE	GRIMSBY	523807.82	409568	2007		59661	Urbis	Axia 16 LED 350mA	19 Watts	6.00 Metres	Galvanised Steel	
Y	8	STREET LIGHTING	WABY CLOSE	GRIMSBY	523848.89	409580.21	2020	28/05/2020	68039	Urbis	Axia 16 LED 350mA	19 Watts	6.00 Metres	Galvanised Steel	
Y	9	STREET LIGHTING	WABY CLOSE	GRIMSBY	523812.23	409590.89	2020	28/05/2020	68040	Urbis	Axia 16 LED 350mA	19 Watts	6.00 Metres	Galvanised Steel	
Y	10	STREET LIGHTING	WABY CLOSE	GRIMSBY	523786.38	409601.56	2020	28/05/2020	68041	Urbis	Axia 16 LED 350mA	19 Watts	6.00 Metres	Galvanised Steel	
Y	11	STREET LIGHTING	WABY CLOSE	GRIMSBY	523755.9	409600.22	1963		59665	Urbis	Axia 16 LED 350mA	19 Watts	5.00 Metres	Steel	
Y	12	STREET LIGHTING	WABY CLOSE	GRIMSBY	523784.22	409619.03	2020	28/05/2020	68042	Urbis	Axia 16 LED 350mA	19 Watts	6.00 Metres	Galvanised Steel	
Y	13	STREET LIGHTING	WABY CLOSE	GRIMSBY	523800.82	409645.56	2020	28/05/2020	68043	Urbis	Axia 16 LED 350mA	19 Watts	6.00 Metres	Galvanised Steel	
Y	14	STREET LIGHTING	WABY CLOSE	GRIMSBY	523823.49	409660.79	2019	08/10/2019	67641	Urbis	Axia 16 LED 350mA	19 Watts	6.00 Metres	Galvanised Steel	
Y	1	STREET LIGHTING	WESTERDALE WAY	GRIMSBY	524151.76	409948.39	2023	22/06/2023	69258	Urbis	Axia 16 LED 350mA	19 Watts	6.00 Metres	Steel	
Y	2	STREET LIGHTING	WESTERDALE WAY	GRIMSBY	524135.11	409929.25	2023	22/06/2023	69358	Urbis	Axia 16 LED 350mA	19 Watts	6.00 Metres	Steel	
Y	3	STREET LIGHTING	WESTERDALE WAY	GRIMSBY	524123.88	409911.06	2023	22/06/2023	69359	Urbis	Axia 16 LED 350mA	19 Watts	6.00 Metres	Steel	
Y	4	STREET LIGHTING	WESTERDALE WAY	GRIMSBY	524105.21	409901.96	2023	22/06/2023	69360	Urbis	Axia 16 LED 350mA	19 Watts	6.00 Metres	Steel	
Y	5	STREET LIGHTING	WESTERDALE WAY	GRIMSBY	524095.41	409887.19	2023	22/06/2023	69361	Urbis	Axia 16 LED 350mA	19 Watts	6.00 Metres	Steel	
Y	6	STREET LIGHTING	WESTERDALE WAY	GRIMSBY	524072.36	409877.98	2023	22/06/2023	69362	Urbis	Axia 16 LED 350mA	19 Watts	6.00 Metres	Steel	
Y	7	STREET LIGHTING	WESTERDALE WAY	GRIMSBY	524060.55	409894.16	2023	22/06/2023	69363	Urbis	Axia 16 LED 350mA	19 Watts	6.00 Metres	Steel	
Y	8	STREET LIGHTING	WESTERDALE WAY	GRIMSBY	524036.56	409915.08	2023	22/06/2023	69364	Urbis	Axia 16 LED 350mA	19 Watts	6.00 Metres	Steel	
Y	9	STREET LIGHTING	WESTERDALE WAY	GRIMSBY	524019.31	409927.13	2023	22/06/2023	69365	Urbis	Axia 16 LED 350mA	19 Watts	6.00 Metres	Steel	
Y	1	STREET LIGHTING	WOAD LANE	GREAT COATES	523868.44	410352.63	1992		61036	1 Urbis LED	Teceo 32 LED 500mA	52 Watts	8.00 Metres	Galvanised Steel	
Y	2	STREET LIGHTING	WOAD LANE	GREAT COATES	523866.23	410385.68	1992		61037	1 Urbis LED	Teceo 32 LED 500mA	52 Watts	8.00 Metres	Galvanised Steel	
Y	3	STREET LIGHTING	WOAD LANE	GREAT COATES	523882.01	410401.17	2020	24/03/2020	67764	Urbis	Teceo 32 LED 500mA	52 Watts	8.00 Metres	Galvanised Steel	
Y	4	STREET LIGHTING	WOAD LANE	GREAT COATES	523885.93	410447	1991		61039	1 Urbis LED	Teceo 32 LED 500mA	52 Watts	10.00 Metres	Galvanised Steel	
Y	5	STREET LIGHTING	WOAD LANE	GREAT COATES	523921.1	410460.34	2017		61040	1 Urbis LED	Teceo 32 LED 500mA	52 Watts	10.00 Metres	Galvanised Steel	
Y	6	STREET LIGHTING	WOAD LANE	GREAT COATES	523958.11	410467.62	1991		61041	1 Urbis LED	Teceo 32 LED 500mA	52 Watts	10.00 Metres	Galvanised Steel	
Y	7	STREET LIGHTING	WOAD LANE	GREAT COATES	523995.48	410468.08	2023	22/09/2023	69305	Urbis	Teceo 32 LED 500mA	52 Watts	12.00 Metres	Galvanised Steel	
Y	8	STREET LIGHTING	WOAD LANE	GREAT COATES	524014.63	410496.52	2023	22/09/2023	69843	Urbis	Teceo 32 LED 500mA	52 Watts	12.00 Metres	Galvanised Steel	
Y	9	STREET LIGHTING	WOAD LANE	GREAT COATES	524046.85	410519.26	1991		61044	1 Urbis LED	Teceo 32 LED 500mA	52 Watts	10.00 Metres	Galvanised Steel	
Y	10	STREET LIGHTING	WOAD LANE	GREAT COATES	524082.2	410528.84	1991		61045	1 Urbis LED	Teceo 32 LED 500mA	52 Watts	10.00 Metres	Galvanised Steel	
Y	11	STREET LIGHTING	WOAD LANE	GREAT COATES	524110.37	410560.69	2004		61046	1 Urbis LED	Teceo 32 LED 500mA	52 Watts	10.00 Metres	Stainless Steel	
Y	12	STREET LIGHTING	WOAD LANE	GREAT COATES	524152.9	410581.22	1991		61047	1 Urbis LED	Teceo 32 LED 500mA	52 Watts	10.00 Metres	Galvanised Steel	
Y	13	STREET LIGHTING	WOAD LANE	GREAT COATES	524168	410607.64	1991		61048	1 Urbis LED	Teceo 32 LED 500mA	52 Watts	10.00 Metres	Galvanised Steel	
Y	14	STREET LIGHTING	WOAD LANE	GREAT COATES	524206.11	410629.92	1991		61049	1 Urbis LED	Teceo 32 LED 500mA	52 Watts	10.00 Metres	Galvanised Steel	
Y	15	STREET LIGHTING	WOAD LANE	GREAT COATES	524231.52	410667.66	2005		61050	1 Urbis LED	Teceo 32 LED 500mA	52 Watts	10.00 Metres	Stainless Steel	
Y	16	STREET LIGHTING	WOAD LANE	GREAT COATES	524270	410689.3	1991		61051	1 Urbis LED	Teceo 32 LED 500mA	52 Watts	10.00 Metres	Galvanised Steel	
Y	17	STREET LIGHTING	WOAD LANE	GREAT COATES	524296.14	410730.08	1991		61052	1 Urbis LED	Teceo 32 LED 500mA	52 Watts	10.00 Metres	Galvanised Steel	
Y	18	STREET LIGHTING	WOAD LANE	GREAT COATES	524330.81	410758.21	2019	25/04/2019	67384	Urbis	Teceo 32 LED 500mA	52 Watts	10.00 Metres	Galvanised Steel	
Y	19	STREET LIGHTING	WOAD LANE	GREAT COATES	524365.68	410774.18	2019	25/04/2019	67385	Urbis	Teceo 32 LED 500mA	52 Watts	10.00 Metres	Galvanised Steel	
Y	20	STREET LIGHTING	WOAD LANE	GREAT COATES	524392.74	410771.53	2019	25/04/2019	67386	Urbis	Teceo 32 LED 500mA	52 Watts	10.00 Metres	Galvanised Steel	
Y	21	STREET LIGHTING	WOAD LANE	GREAT COATES	524419.14	410795.97	2019	25/04/2019	67387	Urbis	Teceo 32 LED 500mA	52 Watts	10.00 Metres	Galvanised Steel	
Y	22	STREET LIGHTING	WOAD LANE	GREAT COATES	524445.85	410801.99	2019	25/04/2019	67388	Urbis	Teceo 32 LED 500mA	52 Watts	10.00 Metres	Galvanised Steel	
Y	23	STREET LIGHTING	WOAD LANE	GREAT COATES	524470.83	410827.51	2019	25/04/2019	67389	Urbis	Teceo 32 LED 500mA	52 Watts	10.00 Metres	Galvanised Steel	
Y	24	STREET LIGHTING	WOAD LANE	GREAT COATES	524466.42	410852.63	2019	25/04/2019	67390	Urbis	Teceo 32 LED 500mA	52 Watts	10.00 Metres	Galvanised Steel	
Y	25	STREET LIGHTING	WOAD LANE	GREAT COATES	524491.74	410872.28	2019	25/04/2019	67391	Urbis	Teceo 32 LED 500mA	52 Watts	10.00 Metres	Galvanised Steel	
Y	26	STREET LIGHTING	WOAD LANE	GREAT COATES	524494.97	410905.4	2019	25/04/2019	67399	Urbis	Axia 48 LED 960mA	136 Watts	12.00 Metres	Galvanised Steel	
Y	27	STREET LIGHTING	WOAD LANE	GREAT COATES	524517.24	410961.54	2019	25/04/2019	67400	Urbis	Axia 48 LED 960mA	136 Watts	12.00 Metres	Galvanised Steel	
Y	28	STREET LIGHTING	WOAD LANE	GREAT COATES	524545.24	410979.4	2019	25/04/2019	67392	Urbis	Teceo 32 LED 500mA	52 Watts	10.00 Metres	Galvanised Steel	
Y	29	STREET LIGHTING	WOAD LANE	GREAT COATES	524530.1	410993.38	2019	25/04/2019	67393	Urbis	Teceo 32 LED 500mA	52 Watts	10.00 Metres	Galvanised Steel	
Y	30	STREET LIGHTING	WOAD LANE	GREAT COATES	524554.23	411041.01	2019	25/04/2019	67394	Urbis	Teceo 32 LED 500mA	52 Watts	10.00 Metres	Galvanised Steel	
Y	31	STREET LIGHTING	WOAD LANE	GREAT COATES	524574.27	411056.84	2019	25/04/2019	67395	Urbis	Teceo 32 LED 500mA	52 Watts	10.00 Metres	Galvanised Steel	
Y	32	STREET LIGHTING	WOAD LANE	GREAT COATES	524545.01	411018.13	2019	25/04/2019	67397	Urbis	Teceo 32 LED 500mA	52 Watts	10.00 Metres	Galvanised Steel	
Y	33	STREET LIGHTING	WOAD LANE	GREAT COATES	524599.57	411125.18	2019	25/04/2019	67396	Urbis	Teceo 32 LED 500mA	52 Watts	10.00 Metres	Galvanised Steel	
Y	34	STREET LIGHTING	WOAD LANE	GREAT COATES	524608.1	411157.86	2019	25/04/2019	67398	Urbis	Teceo 32 LED 500mA	52 Watts	10.00 Metres	Galvanised Steel	
Y	35	STREET LIGHTING	WOAD LANE	GREAT COATES	524605.82	411187.73	2019	25/04/2019	67401	Urbis	Teceo 32 LED 500mA	52 Watts	10.00 Metres	Galvanised Steel	
Y	36	STREET LIGHTING	WOAD LANE	GREAT COATES	524623.9	411221.65	2019	25/04/2019	67402	Urbis	Teceo 32 LED 500mA	52 Watts	10.00 Metres	Galvanised Steel	
Y	37	STREET LIGHTING	WOAD LANE	GREAT COATES	524619.97	411245.86	2019	25/04/2019	67403	Urbis	Teceo 32 LED 500mA	52 Watts	10.00 Metres	Galvanised Steel	
Y	38	STREET LIGHTING	WOAD LANE	GREAT COATES	524641.88	411291.25	2019	25/04/2019	67404	Urbis	Teceo 32 LED 500mA	52 Watts	10.00 Metres	Galvanised Steel	
Y	39	STREET LIGHTING	WOAD LANE	GREAT COATES	524635.87	411311.51	2019	25/04/2019	67405	Urbis	Teceo 32 LED 500mA	52 Watts	10.00 Metres	Galvanised Steel	
Y	1	STREET LIGHTING	THE AVENUE	GREAT COATES	523430.55	409765.87	2013		58904	Urbis	Axia 16 LED 350mA	19 Watts	6.00 Metres	Steel	
Y	2	STREET LIGHTING	THE AVENUE	GREAT COATES	523437.74	409785.32	2013		58905	Urbis	Axia 16 LED 350mA	19 Watts	6.00 Metres	Steel	
Y	3	STREET LIGHTING	THE AVENUE	GREAT COATES	523461.17	409810.08	2013		58906	Urbis	Axia 16 LED 350mA	19 Watts	6.00 Metres	Steel	
Y	4	STREET LIGHTING	THE AVENUE	GREAT COATES	523481.32	409830.08	2013		58907	Urbis	Axia 16 LED 350mA	19 Watts	6.00 Metres	Steel	
Y	5	STREET LIGHTING	THE AVENUE	GREAT COATES	523485.07	409856.09	2013		58908	Urbis	Axia 16 LED 350mA	19 Watts	6.00 Metres	Steel	
Y	6	STREET LIGHTING	THE AVENUE	GREAT COATES	523471.01	409889.67	2013		58909	Urbis	Axia 16 LED 350mA	19 Watts	6.00 Metres	Steel	
Y	7	STREET LIGHTING	THE AVENUE	GREAT COATES	523446.1	409909.36	2013		58910	Urbis	Axia 16 LED 350mA	19 Watts	6.00 Metres	Steel	
Y	1	STREET LIGHTING	STATION ROAD	GREAT COATES	523357.99	409838.67	2006		58185	Urbis	AXIA 3.2 24 LED 540mA	41 Watts	10.00 Metres	Stainless Steel	
Y	2	STREET LIGHTING	STATION ROAD	GREAT COATES	523369.33	409871.52	1992		58186	1 Urbis LED	Teceo 32 LED 500mA	52 Watts	8.00 Metres	Galvanised Steel	
Y	3	STREET LIGHTING	STATION ROAD	GREAT COATES	523391.06	409898.49	1992		58187	Urbis	AXIA 3.2 24 LED 540mA	41 Watts	8.00 Metres	Galvanised Steel	
Y	4	STREET LIGHTING	STATION ROAD	GREAT COATES	523409.65	409905.21	1992		58188	Urbis	AXIA 3.2 24 LED 540mA	41 Watts	8.00 Metres	Galvanised Steel	
Y	5	STREET LIGHTING	STATION ROAD	GREAT COATES	523417.94	409921.69	1992		58189	1 Urbis LED	Teceo 32 LED 500mA	52 Watts	8.00 Metres	Galvanised Steel	
Y	6	STREET LIGHTING	STATION ROAD	GREAT COATES	523436.53	409932.37	1992		58190	1 Urbis LED	Teceo 32 LED 500mA	52 Watts	8.00 Metres	Galvanised Steel	
Y	7	STREET LIGHTING	STATION ROAD	GREAT COATES	523456.6	409934.67	1992		58191	1 Urbis LED	Teceo 32 LED 500mA	52 Watts	8.00 Metres	Galvanised Steel	
Y	8	STREET LIGHTING	STATION ROAD	GREAT COATES	523477.96	409958.24	1992		58192	1 Urbis LED	Teceo 32 LED 500mA	52 Watts	8.00 Metres	Galvanised Steel	
Y	9	STREET LIGHTING	STATION ROAD	GREAT COATES	523491.58	409985.86	1992		58193	1 Urbis LED	Teceo 32 LED 500mA	52 Watts	8.00 Metres	Galvanised Steel	
Y	10	STREET LIGHTING	STATION ROAD	GREAT COATES	523491.03	410018.17	1992		58194	1 Urbis LED	Teceo 32 LED 500mA	52 Watts	8.00 Metres	Galvanised Steel	
Y	11	STREET LIGHTING	STATION ROAD	GREAT COATES	523506.96	410036.99	1992		58195	1 Urbis LED	Teceo 32 LED 500mA	52 Watts	8.00 Metres	Galvanised Steel	
Y	12	STREET LIGHTING	STATION ROAD	GREAT COATES	523522.61	410040.12	1992		58196	Urbis	AXIA 3.2 24 LED 540mA	41 Watts	8.00 Metres	Galvanised Steel	
Y	13	STREET LIGHTING	STATION ROAD	GREAT COATES	523530.53	410062.4	1992		58197	1 Urbis LED	Teceo 32 LED 500mA	52 Watts	8.00 Metres	Galvanised Steel	
Y	14	STREET LIGHTING	STATION ROAD	GREAT COATES	523543.23	410076.48	1992		58198	1 Urbis LED	Teceo 32 LED 500mA	52 Watts	8.00 Metres	Galvanised Steel	
Y	15	STREET LIGHTING	STATION ROAD	GREAT COATES	523564.04	410087.53	1992		58199	Urbis	AXIA 3.2 24 LED 540mA	41 Watts	8.00 Metres	Galvanised Steel	
Y	16	STREET LIGHTING	STATION ROAD	GREAT COATES	523570.29	410113.21	1992		58200	Urbis	AXIA 3.2 24 LED 540mA	41 Watts	8.00 Metres	Galvanised Steel	
Y	17	STREET LIGHTING	STATION ROAD	GREAT COATES	523596.44	410136.87	1992		58201	Urbis	AXIA 3.2 24 LED 540mA	41 Watts	8.00 Metres	Galvanised Steel	
Y	18	STREET LIGHTING	STATION ROAD	GREAT COATES	523602.88	410163.48	1992		58202	Urbis	AXIA 3.2 24 LED 540mA	41 Watts	8.00 Metres	Galvanised Steel	
Y	19	STREET LIGHTING	STATION ROAD	GREAT COATES	523632.71	410174.53	1992		58203	1 Urbis LED	Teceo 32 LED 500mA	52 Watts	8.00 Metres	Galvanised Steel	
Y	20	STREET LIGHTING	STATION ROAD	GREAT COATES	523651.86	410195.79	1992		58204	1 Urbis LED	Teceo 32 LED 500mA	52 Watts	8.00 Metres	Galvanised Steel	
Y	21	STREET LIGHTING	STATION ROAD	GREAT COATES	523676.16	410194.32	1992		58205	Urbis	AXIA 3.2 24 LED 540mA	41 Watts	8.00 Metres	Galvanised Steel	
Y	22	STREET LIGHTING	STATION ROAD	GREAT COATES	523704.33	410218.71	1992		58206	Urbis	AXIA 3.2 24 LED 540mA	41 Watts	8.00 Metres	Galvanised Steel	
Y	23	STREET LIGHTING	STATION ROAD	GREAT COATES	523731.21	410221.29	1992		58207	1 Urbis LED	Teceo 32 LED 500mA	52 Watts	8.00 Metres	Galvanised Steel	
Y	24	STREET LIGHTING	STATION ROAD	GREAT COATES	523757.36	410244.22	1992		58208	1 Urbis LED	Teceo 32 LED 500mA	52 Watts	8.00 Metres	Galvanised Steel	
Y	25	STREET LIGHTING	STATION ROAD	GREAT COATES	523763.06	410267.51	1992		58209	Urbis	AXIA 3.2 24 LED 540mA	41 Watts	8.00 Metres	Galvanised Steel	
Y	26	STREET LIGHTING	STATION ROAD	GREAT COATES	523788.29	410287.48	1992		58210	Urbis	AXIA 3.2 24 LED 540mA	41 Watts	8.00 Metres	Galvanised Steel	
Y	27	STREET LIGHTING	STATION ROAD	GREAT COATES	523798.96	410315.66	1992		58211	1 Urbis LED	Teceo 32 LED 500mA	52 Watts	8.00 Metres	Galvanised Steel	
Y	28	STREET LIGHTING	STATION ROAD	GREAT COATES	523818.45	410327.49	2021	02/09/2021	68433	Urbis	Teceo 32 LED 500mA	52 Watts	8.00 Metres	Galvanised Steel	
Y	29	STREET LIGHTING	STATION ROAD	GREAT COATES	523853.83	410330.66	1992		58213	1 Urbis LED	Teceo 32 LED 500mA	52 Watts	8.00 Metres	Galvanised Steel	
Y	30	STREET LIGHTING	STATION ROAD	GREAT COATES	523882.18	410346.41	1992		58214	1 Urbis LED	Teceo 32 LED 500mA	52 Watts	8.00 Metres	Galvanised Steel	
Y	31	STREET LIGHTING	STATION ROAD	GREAT COATES	523896.69	410338.49	1992		58215	1 Urbis LED	Teceo 32 LED 500mA	52 Watts	8.00 Metres	Galvanised Steel	
Y	1	STREET LIGHTING	NEWBURY AVENUE	GREAT COATES	524086.68	410422.88	1985		54075	1 Urbis LED	Teceo 16 LED 500mA	28 Watts	6.00 Metres	Galvanised Steel	
Y	2	STREET LIGHTING	NEWBURY AVENUE	GREAT COATES	524115.22	410436.87	1985		54076	1 Urbis LED	Teceo 16 LED 500mA	28 Watts	6.00 Metres	Galvanised Steel	
Y	3	STREET LIGHTING	NEWBURY AVENUE	GREAT COATES	524157.94	410479.77	1985		54077	1 Urbis LED	Teceo 16 LED 500mA	28 Watts	6.00 Metres	Galvanised Steel	
Y	4	STREET LIGHTING	NEWBURY AVENUE	GREAT COATES	524185.97	410503.69	2004		54078	1 Urbis LED	Teceo 16 LED 500mA	28 Watts	6.00 Metres	Stainless Steel	
Y	5	STREET LIGHTING	NEWBURY AVENUE	GREAT COATES	524212.62	410523.77	2009		54079	1 Urbis LED	Teceo 16 LED 500mA	28 Watts	6.00 Metres	Steel	
Y	6	STREET LIGHTING	NEWBURY AVENUE	GREAT COATES	524241	410536	2001		54080	1 Urbis LED	Teceo 16 LED 500mA	28 Watts	6.00 Metres	Galvanised Steel	
Y	7	STREET LIGHTING	NEWBURY AVENUE	GREAT COATES	524218.6	410575.7	2019	04/10/2019	67625	Urbis	Teceo 16 LED 500mA	28 Watts	6.00 Metres	Galvanised Steel	
Y	8	STREET LIGHTING	NEWBURY AVENUE	GREAT COATES	524193.47	410602.57	2017	25/08/2017	54082	Urbis	Axia 16 LED 350mA	19 Watts	6.00 Metres	Galvanised Steel	
Y	1	STREET LIGHTING	COOKS LANE	GREAT COATES	523742.05	410267.67	2018	04/05/2018	66978	Urbis	Axia 16 LED 500mA	28 Watts	6.00 Metres	Galvanised Steel	
Y	2	STREET LIGHTING	COOKS LANE	GREAT COATES	523715.62	410288.11	2018	04/05/2018	67070	Urbis	Axia 16 LED 500mA	28 Watts	6.00 Metres	Galvanised Steel	
Y	3	STREET LIGHTING	COOKS LANE	GREAT COATES	523674.58	410270.09	2018	04/05/2018	67071	Urbis	Axia 16 LED 500mA	28 Watts	6.00 Metres	Galvanised Steel	
Y	4	STREET LIGHTING	COOKS LANE	GREAT COATES	523640.18	410256.13	2018	04/05/2018	67072	Urbis	Axia 16 LED 500mA	28 Watts	6.00 Metres	Galvanised Steel	
Y	5	STREET LIGHTING	COOKS LANE	GREAT COATES	523613.86	410237.68	2018	04/05/2018	67073	Urbis	Axia 16 LED 500mA	28 Watts	6.00 Metres	Galvanised Steel	
Y	6	STREET LIGHTING	COOKS LANE	GREAT COATES	523588.41	410235.47	2018	04/05/2018	67074	Urbis	Axia 16 LED 500mA	28 Watts	6.00 Metres	Galvanised Steel	
Y	7	STREET LIGHTING	COOKS LANE	GREAT COATES	523550.17	410252.89	2018	04/05/2018	67075	Urbis	Axia 16 LED 500mA	28 Watts	6.00 Metres	Galvanised Steel	

Y	1	STREET LIGHTING	MEADOWBANK	GREAT COATES	523565.77	410068.43	1989		53484	1 Urbis LED	Axia 16 LED 500mA	28 Watts	8.00 Metres	Galvanised Steel	
Y	2	STREET LIGHTING	MEADOWBANK	GREAT COATES	523577	410036.67	1989		53485	Urbis	Axia 16 LED 350mA	19 Watts	6.00 Metres	Galvanised Steel	
Y	3	STREET LIGHTING	MEADOWBANK	GREAT COATES	523596.15	410017.52	1989		53486	Urbis	Axia 16 LED 350mA	19 Watts	6.00 Metres	Galvanised Steel	
Y	4	STREET LIGHTING	MEADOWBANK	GREAT COATES	523609.22	410003.62	1989		53487	Urbis	Axia 16 LED 350mA	19 Watts	6.00 Metres	Galvanised Steel	
Y	5	STREET LIGHTING	MEADOWBANK	GREAT COATES	523587.12	409981.16	1989		53488	Urbis	Axia 16 LED 350mA	19 Watts	6.00 Metres	Galvanised Steel	
Y	6	STREET LIGHTING	MEADOWBANK	GREAT COATES	523577.55	409956.12	1989		53489	Urbis	Axia 16 LED 350mA	19 Watts	6.00 Metres	Galvanised Steel	
Y	7	STREET LIGHTING	MEADOWBANK	GREAT COATES	523550.3	409957.69	1989		53490	1 Urbis LED	Axia 16 LED 500mA	28 Watts	6.00 Metres	Galvanised Steel	
Y	8	STREET LIGHTING	MEADOWBANK	GREAT COATES	523624.85	410012.11	2021	22/02/2021	68296	Urbis	Axia 16 LED 350mA	19 Watts	6.00 Metres	Galvanised Steel	
Y	9	STREET LIGHTING	MEADOWBANK	GREAT COATES	523649.24	410017.79	1989		53492	Urbis	Axia 16 LED 350mA	19 Watts	6.00 Metres	Galvanised Steel	
Y	10	STREET LIGHTING	MEADOWBANK	GREAT COATES	523670.04	410039.42	1989		53493	Urbis	Axia 16 LED 350mA	19 Watts	6.00 Metres	Galvanised Steel	
Y	11	STREET LIGHTING	MEADOWBANK	GREAT COATES	523685.69	410040.53	1989		53494	1 Urbis LED	Axia 16 LED 500mA	28 Watts	6.00 Metres	Galvanised Steel	
Y	12	STREET LIGHTING	MEADOWBANK	GREAT COATES	523671.33	410069.16	1989		53495	Urbis	Axia 16 LED 350mA	19 Watts	6.00 Metres	Galvanised Steel	
Y	13	STREET LIGHTING	MEADOWBANK	GREAT COATES	523652.18	410086.74	1989		53496	1 Urbis LED	Axia 16 LED 500mA	28 Watts	6.00 Metres	Galvanised Steel	
Y	14	STREET LIGHTING	MEADOWBANK	GREAT COATES	523684.04	410065.85	1989		53497	Urbis	Axia 16 LED 350mA	19 Watts	6.00 Metres	Galvanised Steel	
Y	15	STREET LIGHTING	MEADOWBANK	GREAT COATES	523706.68	410091.9	1989		53498	Urbis	Axia 16 LED 350mA	19 Watts	6.00 Metres	Galvanised Steel	
Y	16	STREET LIGHTING	MEADOWBANK	GREAT COATES	523744.06	410094.85	1989		53499	Urbis	Axia 16 LED 350mA	19 Watts	6.00 Metres	Galvanised Steel	
Y	17	STREET LIGHTING	MEADOWBANK	GREAT COATES	523771.12	410116.66	1989		53500	Urbis	Axia 16 LED 350mA	19 Watts	6.00 Metres	Galvanised Steel	
Y	18	STREET LIGHTING	MEADOWBANK	GREAT COATES	523777.57	410139.03	1989		53501	Urbis	Axia 16 LED 350mA	19 Watts	6.00 Metres	Galvanised Steel	
Y	19	STREET LIGHTING	MEADOWBANK	GREAT COATES	523804.45	410149.71	1989		53502	Urbis	Axia 16 LED 350mA	19 Watts	6.00 Metres	Galvanised Steel	
Y	20	STREET LIGHTING	MEADOWBANK	GREAT COATES	523835.93	410166.93	1989		53503	1 Urbis LED	Axia 16 LED 500mA	28 Watts	6.00 Metres	Galvanised Steel	
Y	21	STREET LIGHTING	MEADOWBANK	GREAT COATES	523851.83	410185.56	2017	12/12/2017	67568	Urbis	Axia 8 LED 350mA	10 Watts	6.00 Metres	Galvanised Steel	
Y	1	STREET LIGHTING	FERNDOWN	GRIMSBY	523943.27	410337.24	1992		48462	Urbis	Axia 16 LED 350mA	19 Watts	6.00 Metres	Galvanised Steel	
Y	2	STREET LIGHTING	FERNDOWN	GRIMSBY	523971.9	410338.11	1992		48463	Urbis	Axia 16 LED 350mA	19 Watts	6.00 Metres	Galvanised Steel	
Y	3	STREET LIGHTING	FERNDOWN	GRIMSBY	523989.2	410308.56	1992		48464	Urbis	Axia 16 LED 350mA	19 Watts	6.00 Metres	Galvanised Steel	
Y	4	STREET LIGHTING	FERNDOWN	GRIMSBY	523974.66	410284.54	1992		48465	Urbis	Axia 16 LED 350mA	19 Watts	6.00 Metres	Galvanised Steel	
Y	5	STREET LIGHTING	FERNDOWN	GRIMSBY	523980.37	410272.57	1992		48466	Urbis	Axia 16 LED 350mA	19 Watts	6.00 Metres	Galvanised Steel	
Y	6	STREET LIGHTING	FERNDOWN	GRIMSBY	524014.24	410265.3	1992		48467	Urbis	Axia 16 LED 350mA	19 Watts	6.00 Metres	Galvanised Steel	
Y	7	STREET LIGHTING	FERNDOWN	GRIMSBY	523949.07	410271.1	1992		48468	Urbis	Axia 16 LED 350mA	19 Watts	6.00 Metres	Galvanised Steel	
Y	8	STREET LIGHTING	FERNDOWN	GRIMSBY	523919.24	410252.96	1992		48469	Urbis	Axia 16 LED 350mA	19 Watts	6.00 Metres	Galvanised Steel	
Y	9	STREET LIGHTING	FERNDOWN	GRIMSBY	523908.01	410228.2	1992		48470	Urbis	Axia 16 LED 350mA	19 Watts	6.00 Metres	Galvanised Steel	
Y	10	STREET LIGHTING	FERNDOWN	GRIMSBY	523876.34	410219.09	1992		48471	Urbis	Axia 16 LED 350mA	19 Watts	6.00 Metres	Galvanised Steel	
Y	1	STREET LIGHTING	PINE CLOSE	GREAT COATES	524002.51	410327.66	1984		55492	1 Urbis LED	Axia 16 LED 500mA	28 Watts	6.00 Metres	Galvanised Steel	
Y	2	STREET LIGHTING	PINE CLOSE	GREAT COATES	524029.76	410319.37	1984		55493	1 Urbis LED	Axia 16 LED 500mA	28 Watts	6.00 Metres	Galvanised Steel	
Y	3	STREET LIGHTING	PINE CLOSE	GREAT COATES	524066.95	410317.81	1984		55494	1 Urbis LED	Axia 16 LED 500mA	28 Watts	6.00 Metres	Galvanised Steel	
Y	1	STREET LIGHTING	ALLINGTON DRIVE	GREAT COATES	524366.63	410745.08	2001		43094	1 Urbis LED	Axia 16 LED 500mA	28 Watts	6.00 Metres	Galvanised Steel	
Y	2	STREET LIGHTING	ALLINGTON DRIVE	GREAT COATES	524368.63	410720.14	2001		43095	1 Urbis LED	Axia 16 LED 500mA	28 Watts	6.00 Metres	Galvanised Steel	
Y	3	STREET LIGHTING	ALLINGTON DRIVE	GREAT COATES	524396.51	410689.57	2001		43096	1 Urbis LED	Axia 16 LED 500mA	28 Watts	6.00 Metres	Galvanised Steel	
Y	4	STREET LIGHTING	ALLINGTON DRIVE	GREAT COATES	524372.18	410678.9	2002		43097	1 Urbis LED	Axia 16 LED 500mA	28 Watts	6.00 Metres	Galvanised Steel	
Y	5	STREET LIGHTING	ALLINGTON DRIVE	GREAT COATES	524355.35	410653.62	2002		43098	1 Urbis LED	Axia 16 LED 500mA	28 Watts	6.00 Metres	Galvanised Steel	
Y	6	STREET LIGHTING	ALLINGTON DRIVE	GREAT COATES	524333.99	410633.56	2002		43099	1 Urbis LED	Axia 16 LED 500mA	28 Watts	6.00 Metres	Galvanised Steel	
Y	7	STREET LIGHTING	ALLINGTON DRIVE	GREAT COATES	524359.53	410599.36	2002		43100	1 Urbis LED	Axia 16 LED 500mA	28 Watts	6.00 Metres	Galvanised Steel	
Y	8	STREET LIGHTING	ALLINGTON DRIVE	GREAT COATES	524322.94	410589.05	2002		43101	1 Urbis LED	Axia 16 LED 500mA	28 Watts	6.00 Metres	Galvanised Steel	
Y	9	STREET LIGHTING	ALLINGTON DRIVE	GREAT COATES	524297.97	410566.54	2002		43102	1 Urbis LED	Axia 16 LED 500mA	28 Watts	6.00 Metres	Galvanised Steel	
Y	1	STREET LIGHTING	NAVENSBY CLOSE	GREAT COATES	524395.72	410730.15	2001		53930	1 Urbis LED	Axia 16 LED 500mA	28 Watts	6.00 Metres	Galvanised Steel	
Y	2	STREET LIGHTING	NAVENSBY CLOSE	GREAT COATES	524424.01	410727.73	2001		53931	1 Urbis LED	Axia 16 LED 500mA	28 Watts	6.00 Metres	Galvanised Steel	
Y	3	STREET LIGHTING	NAVENSBY CLOSE	GREAT COATES	524450.96	410710.16	2001		53932	1 Urbis LED	Axia 16 LED 500mA	28 Watts	6.00 Metres	Galvanised Steel	
Y	1	STREET LIGHTING	RUSKINGTON CLOSE	GREAT COATES	524287.88	410592.43	2002		56415	Urbis	Axia 16 LED 350mA	19 Watts	6.00 Metres	Galvanised Steel	
Y	2	STREET LIGHTING	RUSKINGTON CLOSE	GREAT COATES	524275.77	410611.23	2002		56416	Urbis	Axia 16 LED 350mA	19 Watts	6.00 Metres	Galvanised Steel	
Y	1	STREET LIGHTING	SIBSEY COURT	GREAT COATES	524378.82	410661.94	2002		57180	1 Urbis LED	Axia 16 LED 500mA	28 Watts	6.00 Metres	Galvanised Steel	
Y	1	STREET LIGHTING	SERVICE ROAD 21	GRIMSBY	524027.55	409962.26	2021	26/07/2021	68591	Urbis	Axia 24 LED 540mA	41 Watts	6.00 Metres	Galvanised Steel	
Y	2	STREET LIGHTING	SERVICE ROAD 21	GRIMSBY	524014.85	409934.11	2021	26/07/2021	68658	Urbis	Axia 24 LED 540mA	41 Watts	6.00 Metres	Galvanised Steel	
Y	3	STREET LIGHTING	SERVICE ROAD 21	GRIMSBY	523982.24	409923.47	2021	26/07/2021	68659	Urbis	Axia 24 LED 540mA	41 Watts	6.00 Metres	Galvanised Steel	
Y	4	STREET LIGHTING	SERVICE ROAD 21	GRIMSBY	524011.07	409907.34	2021	26/07/2021	68660	Urbis	Axia 24 LED 540mA	41 Watts	6.00 Metres	Galvanised Steel	
Y	5	STREET LIGHTING	SERVICE ROAD 21	GRIMSBY	524035.1	409887.43	2021	26/07/2021	68661	Urbis	Axia 24 LED 540mA	41 Watts	6.00 Metres	Galvanised Steel	
Y	6	STREET LIGHTING	SERVICE ROAD 21	GRIMSBY	524052.15	409858.61	1997		57059	Urbis	Teceo 24 LED 500mA	40 Watts	6.00 Metres	Galvanised Steel	
Y	1	STREET LIGHTING	SERVICE ROAD 22	GRIMSBY	524043.23	409956.59	2021	26/07/2021	68062	Urbis	Teceo 24 LED 500mA	40 Watts	6.00 Metres	Galvanised Steel	
Y	2	STREET LIGHTING	SERVICE ROAD 22	GRIMSBY	524055.41	409930.01	2021	26/07/2021	68662	Urbis	Teceo 24 LED 500mA	40 Watts	6.00 Metres	Galvanised Steel	
Y	3	STREET LIGHTING	SERVICE ROAD 22	GRIMSBY	524084.21	409911.66	2021	26/07/2021	68663	Urbis	Teceo 24 LED 500mA	40 Watts	6.00 Metres	Galvanised Steel	
Y	4	STREET LIGHTING	SERVICE ROAD 22	GRIMSBY	524083.58	409937.76	2021	26/07/2021	68664	Urbis	Teceo 24 LED 500mA	40 Watts	6.00 Metres	Galvanised Steel	
Y	5	STREET LIGHTING	SERVICE ROAD 22	GRIMSBY	524103.99	409934.92			68593	Urbis	Axia 16 LED 350mA	19 Watts			
Y	1	STREET LIGHTING	SERVICE ROAD 23	GRIMSBY	524172.86	409949.74	2021	29/07/2021	68594	Urbis	Teceo 24 LED 500mA	40 Watts	6.00 Metres	Galvanised Steel	
Y	2	STREET LIGHTING	SERVICE ROAD 23	GRIMSBY	524171.22	409916.75	2021	29/07/2021	68665	Urbis	Teceo 24 LED 500mA	40 Watts	6.00 Metres	Galvanised Steel	
Y	3	STREET LIGHTING	SERVICE ROAD 23	GRIMSBY	524151.33	409889.14	2021	29/07/2021	68666	Urbis	Teceo 24 LED 500mA	40 Watts	6.00 Metres	Galvanised Steel	
Y	4	STREET LIGHTING	SERVICE ROAD 23	GRIMSBY	524137.89	409871.41	2010		57066	Urbis	Teceo 24 LED 500mA	40 Watts	6.00 Metres	Steel	
Y	5	STREET LIGHTING	SERVICE ROAD 23	GRIMSBY	524126.09	409861.96	2010		57067	Urbis	Axia 16 LED 350mA	19 Watts	6.00 Metres	Steel	
Y	6	STREET LIGHTING	SERVICE ROAD 23	GRIMSBY	524111.1	409868.09	2021	29/07/2021	68667	Urbis	Teceo 24 LED 500mA	40 Watts	6.00 Metres	Galvanised Steel	
Y	1	STREET LIGHTING	SERVICE ROAD 20	GRIMSBY	524463.13	409602.89	2021	25/06/2021	68563	Urbis	Axia 16 LED 350mA	19 Watts	6.00 Metres	Galvanised Steel	
Y	2	STREET LIGHTING	SERVICE ROAD 20	GRIMSBY	524482.62	409585.05	2003		57051	1 Urbis LED	Axia 16 LED 500mA	28 Watts	5.00 Metres	Stainless Steel	
Y	3	STREET LIGHTING	SERVICE ROAD 20	GRIMSBY	524488.6	409566.18	2021	25/06/2021	68647	Urbis	Axia 24 LED 540mA	41 Watts	6.00 Metres	Galvanised Steel	
Y	4	STREET LIGHTING	SERVICE ROAD 20	GRIMSBY	524466.41	409553.98	2006		57053	1 Urbis LED	Axia 16 LED 500mA	28 Watts	6.00 Metres	Galvanised Steel	
Y	1	STREET LIGHTING	WINGATE ROAD	GRIMSBY					70234						
Y	4	STREET LIGHTING	WINGATE ROAD	GRIMSBY	524211	409843	2001		60913	1 Urbis LED	Teceo 32 LED 500mA	52 Watts	8.00 Metres	Galvanised Steel	
Y	5	STREET LIGHTING	WINGATE ROAD	GRIMSBY	524189.77	409809.86	2004		60914	1 Urbis LED	Teceo 32 LED 500mA	52 Watts	8.00 Metres	Stainless Steel	
Y	6	STREET LIGHTING	WINGATE ROAD	GRIMSBY	524159.35	409778.57	2000		60915	1 Urbis LED	Teceo 32 LED 500mA	52 Watts	8.00 Metres	Steel	
Y	7	STREET LIGHTING	WINGATE ROAD	GRIMSBY	524127.13	409751.41	2000		60916	1 Urbis LED	Teceo 32 LED 500mA	52 Watts	8.00 Metres	Galvanised Steel	
Y	8	STREET LIGHTING	WINGATE ROAD	GRIMSBY	524098.04	409726.65	2000		60917	1 Urbis LED	Teceo 32 LED 500mA	52 Watts	8.00 Metres	Galvanised Steel	
Y	9	STREET LIGHTING	WINGATE ROAD	GRIMSBY	524065.27	409717.63	2000		60918	1 Urbis LED	Teceo 32 LED 500mA	52 Watts	8.00 Metres	Galvanised Steel	
Y	10	STREET LIGHTING	WINGATE ROAD	GRIMSBY	524058.71	409693.31	2010		60919	1 Urbis LED	Teceo 32 LED 500mA	52 Watts	8.00 Metres	Steel	
Y	11	STREET LIGHTING	WINGATE ROAD	GRIMSBY	524038.02	409675.1	2000		60920	1 Urbis LED	Teceo 32 LED 500mA	52 Watts	8.00 Metres	Galvanised Steel	
Y	12	STREET LIGHTING	WINGATE ROAD	GRIMSBY	524024.53	409687.38	2014		66372	1 Urbis LED	Teceo 48 LED 500mA	79 Watts	8.00 Metres	Galvanised Steel	
Y	13	STREET LIGHTING	WINGATE ROAD	GRIMSBY	524027.39	409667.28	2014		66373	1 Urbis LED	Teceo 48 LED 500mA	79 Watts	8.00 Metres	Galvanised Steel	
Y	14	STREET LIGHTING	WINGATE ROAD	GRIMSBY	524008.21	409654.32	2014		66374	1 Urbis LED	Teceo 48 LED 500mA	79 Watts	8.00 Metres	Galvanised Steel	
Y	15	STREET LIGHTING	WINGATE ROAD	GRIMSBY	523982.6	409655.12	2012		60922	1 Urbis LED	Teceo 32 LED 500mA	52 Watts	8.00 Metres	Steel	
Y	16	STREET LIGHTING	WINGATE ROAD	GRIMSBY	523953.94	409634.47	2004		60923	1 Urbis LED	Teceo 32 LED 500mA	52 Watts	8.00 Metres	Stainless Steel	
Y	17	STREET LIGHTING	WINGATE ROAD	GRIMSBY	523920.84	409633.19	2021	25/01/2021	68232	Urbis	Teceo 32 LED 500mA	52 Watts	8.00 Metres	Galvanised Steel	
Y	18	STREET LIGHTING	WINGATE ROAD	GRIMSBY	523883.55	409639.84	2011		60925	1 Urbis LED	Teceo 32 LED 500mA	52 Watts	8.00 Metres	Steel	
Y	1	STREET LIGHTING	THAMES COURT CAR PARK	GRIMSBY	524112.27	409768.83			58899	1 Urbis LED	Axia 16 LED 500mA	28 Watts	5.00 Metres	Galvanised Steel	
Y	2	STREET LIGHTING	THAMES COURT CAR PARK	GRIMSBY	524104.33	409793.32	2009		58900	1 Urbis LED	Axia 16 LED 500mA	28 Watts	6.00 Metres	Steel	
Y	3	STREET LIGHTING	THAMES COURT CAR PARK	GRIMSBY	524080.98	409806.11	2009		58901	1 Urbis LED	Axia 16 LED 500mA	28 Watts	5.00 Metres	Steel	
Y	4	STREET LIGHTING	THAMES COURT CAR PARK	GRIMSBY	524062.57	409787.96			58902	1 Urbis LED	Axia 16 LED 500mA	28 Watts	6.00 Metres	Galvanised Steel	
Y	5	STREET LIGHTING	THAMES COURT CAR PARK	GRIMSBY	524081.96	409763.32			58903	1 Urbis LED	Axia 16 LED 500mA	28 Watts	6.00 Metres	Galvanised Steel	
Y	1	STREET LIGHTING	HUNTERS CLOSE	GRIMSBY	523346.3	410007.2	1992		51226	Urbis	Axia 16 LED 350mA	19 Watts	5.00 Metres	Galvanised Steel	
Y	2	STREET LIGHTING	HUNTERS CLOSE	GRIMSBY	523370.6	410020.87	1992		51227	Urbis	Axia 16 LED 350mA	19 Watts	5.00 Metres	Galvanised Steel	
Y	3	STREET LIGHTING	HUNTERS CLOSE	GRIMSBY	523378.83	410043.59	1992		51228	Urbis	Axia 16 LED 350mA	19 Watts	5.00 Metres	Galvanised Steel	
Y	4	STREET LIGHTING	HUNTERS CLOSE	GRIMSBY	523379.59	410066.38	1992		51229	Urbis	Axia 16 LED 350mA	19 Watts	5.00 Metres	Galvanised Steel	
Y	5	STREET LIGHTING	HUNTERS CLOSE	GRIMSBY	523367.18	410083.15	1992		51230	Urbis	Axia 16 LED 350mA	19 Watts	5.00 Metres	Galvanised Steel	
Y	6	STREET LIGHTING	HUNTERS CLOSE	GRIMSBY	523374.53	410098.91	1992		51231	Urbis	Axia 16 LED 350mA	19 Watts	5.00 Metres	Galvanised Steel	
Y	1	STREET LIGHTING	OLD ROAD	GREAT COATES	523375.81	409941.73	2014	03/06/2014	62666	1 Urbis LED	Teceo 24 LED 500mA	40 Watts	6.00 Metres	Galvanised Steel	
Y	2	STREET LIGHTING	OLD ROAD	GREAT COATES	523360.12	409983.56	2014	03/06/2014	62667	1 Urbis LED	Teceo 24 LED 500mA	40 Watts	6.00 Metres	Galvanised Steel	
Y	1	STREET LIGHTING	BLACKTHORN DRIVE	GRIMSBY	523505.19	410048.36	1992		44192	Urbis	Axia 8 LED 350mA	10 Watts	5.00 Metres	Galvanised Steel	
Y	2	STREET LIGHTING	BLACKTHORN DRIVE	GRIMSBY	523490.96	410062.89	1992		44193	Urbis	Axia 8 LED 350mA	10 Watts	5.00 Metres	Galvanised Steel	
Y	3	STREET LIGHTING	BLACKTHORN DRIVE	GRIMSBY	523483.36	410087.25	1992		44194	Urbis	Axia 8 LED 350mA	10 Watts	5.00 Metres	Galvanised Steel	
Y	4	STREET LIGHTING	BLACKTHORN DRIVE	GRIMSBY	523475.26	410078.08	1992		44195	Urbis	Axia 8 LED 350mA	10 Watts	5.00 Metres	Galvanised Steel	
Y	5	STREET LIGHTING	BLACKTHORN DRIVE	GRIMSBY	523451.08	410064.34	1992		44196	Urbis	Axia 16 LED 350mA	19 Watts	5.00 Metres	Galvanised Steel	
Y	6	STREET LIGHTING	BLACKTHORN DRIVE	GRIMSBY	523443.11	410038.46	1992		44197	Urbis	Axia 16 LED 350mA	19 Watts	5.00 Metres	Galvanised Steel	
Y	7	STREET LIGHTING	BLACKTHORN DRIVE	GRIMSBY	523431.59	410019.54	1992		44198	Urbis	Axia 16 LED 350mA	19 Watts	5.00 Metres	Galvanised Steel	
Y	8	STREET LIGHTING	BLACKTHORN DRIVE	GRIMSBY	523469.06	410105.42	1992		44199	Urbis	Axia 8 LED 350mA	10 Watts	5.00 Metres	Galvanised Steel	
Y	9	STREET LIGHTING	BLACKTHORN DRIVE	GRIMSBY	523482.48	410114.41	1992		44200	Urbis	Axia 8 LED 350mA	10 Watts	5.00 Metres	Galvanised Steel	
Y	10	STREET LIGHTING	BLACKTHORN DRIVE	GRIMSBY	523504	410125.23	1992		44201	Urbis	Axia 16 LED 350mA	19 Watts	5.00 Metres	Galvanised Steel	
Y	11	STREET LIGHTING	BLACKTHORN DRIVE	GRIMSBY	523464.38	410131.75	1992		44202	Urbis	Axia 8 LED 350mA	10 Watts	5.00 Metres	Galvanised Steel	

Y	12	STREET LIGHTING	BLACKTHORN DRIVE	GRIMSBY	523440.58	410134.1	1992		44203	Urbis	Axia 8 LED 350mA	10 Watts	5.00 Metres	Galvanised Steel	
Y	13	STREET LIGHTING	BLACKTHORN DRIVE	GRIMSBY	523419.57	410132.39	1992		44204	Urbis	Axia 16 LED 350mA	19 Watts	5.00 Metres	Galvanised Steel	
Y	14	STREET LIGHTING	BLACKTHORN DRIVE	GRIMSBY	523409.82	410117.64	1992		44205	Urbis	Axia 16 LED 350mA	19 Watts	5.00 Metres	Galvanised Steel	
Y	15	STREET LIGHTING	BLACKTHORN DRIVE	GRIMSBY	523443.75	410148.41	1992		44206	Urbis	Axia 8 LED 350mA	10 Watts	5.00 Metres	Galvanised Steel	
Y	16	STREET LIGHTING	BLACKTHORN DRIVE	GRIMSBY	523454.13	410164.99	1992		44207	Urbis	Axia 8 LED 350mA	10 Watts	5.00 Metres	Galvanised Steel	
Y	17	STREET LIGHTING	BLACKTHORN DRIVE	GRIMSBY	523468.05	410177.46	1992		44208	Urbis	Axia 16 LED 350mA	19 Watts	5.00 Metres	Galvanised Steel	
Y	1	STREET LIGHTING	HOLME FARM CLOSE	GREAT COATES	523994.64	410486.97	1993		61661	Urbis	Axia 16 LED 350mA	19 Watts	5.00 Metres	Galvanised Steel	
Y	2	STREET LIGHTING	HOLME FARM CLOSE	GREAT COATES	523978.62	410504.28	1993		61662	Urbis	Axia 16 LED 350mA	19 Watts	5.00 Metres	Galvanised Steel	
Y	3	STREET LIGHTING	HOLME FARM CLOSE	GREAT COATES	523959.11	410517.63	1993		61663	Urbis	Axia 16 LED 350mA	19 Watts	5.00 Metres	Galvanised Steel	
Y	4	STREET LIGHTING	HOLME FARM CLOSE	GREAT COATES	523968.13	410536.41	1993		61664	Urbis	Axia 16 LED 350mA	19 Watts	5.00 Metres	Galvanised Steel	
Y	5	STREET LIGHTING	HOLME FARM CLOSE	GREAT COATES	523978.99	410556.02	1993		61665	Urbis	Axia 16 LED 350mA	19 Watts	5.00 Metres	Galvanised Steel	
Y	1	STREET LIGHTING	WINGATE PARADE	GRIMSBY	524042.56	409730.33	1997		60902	1 Urbis LED	Teceo 24 LED 500mA	40 Watts	7.00 Metres	Galvanised Steel	
Y	2	STREET LIGHTING	WINGATE PARADE	GRIMSBY	524058.2	409742.69	1997		60903	1 Urbis LED	Teceo 24 LED 500mA	40 Watts	7.00 Metres	Galvanised Steel	
Y	3	STREET LIGHTING	WINGATE PARADE	GRIMSBY	524050.47	409752.63	1997		60904	1 Urbis LED	Teceo 24 LED 500mA	40 Watts	7.00 Metres	Galvanised Steel	
Y	4	STREET LIGHTING	WINGATE PARADE	GRIMSBY	524036.47	409769.39	1997		60905	1 Urbis LED	Teceo 24 LED 500mA	40 Watts	7.00 Metres	Galvanised Steel	
Y	1	STREET LIGHTING	OSPREY DRIVE	GREAT COATES	523797.8	410330.3	2006		54508	1 Urbis LED	Axia 16 LED 500mA	28 Watts	6.00 Metres	Stainless Steel	
Y	2	STREET LIGHTING	OSPREY DRIVE	GREAT COATES	523790.57	410358.58	2006		54509	1 Urbis LED	Axia 16 LED 500mA	28 Watts	6.00 Metres	Stainless Steel	
Y	3	STREET LIGHTING	OSPREY DRIVE	GREAT COATES	523783.74	410391.61	2006		54510	1 Urbis LED	Axia 16 LED 500mA	28 Watts	6.00 Metres	Stainless Steel	
Y	4	STREET LIGHTING	OSPREY DRIVE	GREAT COATES	523769.19	410414.57	2006		54511	1 Urbis LED	Axia 16 LED 500mA	28 Watts	6.00 Metres	Stainless Steel	
Y	5	STREET LIGHTING	OSPREY DRIVE	GREAT COATES	523740.95	410417.71	2006		54512	1 Urbis LED	Axia 16 LED 500mA	28 Watts	6.00 Metres	Stainless Steel	
Y	6	STREET LIGHTING	OSPREY DRIVE	GREAT COATES	523710.6	410407.6	2006		54513	1 Urbis LED	Axia 16 LED 500mA	28 Watts	6.00 Metres	Stainless Steel	
Y	7	STREET LIGHTING	OSPREY DRIVE	GREAT COATES	523681.13	410418.12	2007		54514	1 Urbis LED	Axia 16 LED 500mA	28 Watts	6.00 Metres	Stainless Steel	
Y	8	STREET LIGHTING	OSPREY DRIVE	GREAT COATES	523645.09	410418.33	2007		54515	1 Urbis LED	Axia 16 LED 500mA	28 Watts	6.00 Metres	Stainless Steel	
Y	9	STREET LIGHTING	OSPREY DRIVE	GREAT COATES	523629.6	410403.13	2007		54516	1 Urbis LED	Axia 16 LED 500mA	28 Watts	6.00 Metres	Stainless Steel	
Y	10	STREET LIGHTING	OSPREY DRIVE	GREAT COATES	523602.74	410408.3	2007		54517	1 Urbis LED	Axia 16 LED 500mA	28 Watts	6.00 Metres	Stainless Steel	
Y	11	STREET LIGHTING	OSPREY DRIVE	GREAT COATES	523604.74	410385.76	2007		54518	1 Urbis LED	Axia 16 LED 500mA	28 Watts	6.00 Metres	Stainless Steel	
Y	12	STREET LIGHTING	OSPREY DRIVE	GREAT COATES	523589.4	410374.4	2007		54519	1 Urbis LED	Axia 16 LED 500mA	28 Watts	6.00 Metres	Stainless Steel	
Y	13	STREET LIGHTING	OSPREY DRIVE	GREAT COATES	523610.86	410374.95	2007		54520	1 Urbis LED	Axia 16 LED 500mA	28 Watts	6.00 Metres	Stainless Steel	
Y	14	STREET LIGHTING	OSPREY DRIVE	GREAT COATES	523597.72	410361.99	2007		54521	1 Urbis LED	Axia 16 LED 500mA	28 Watts	6.00 Metres	Stainless Steel	
Y	15	STREET LIGHTING	OSPREY DRIVE	GREAT COATES	523604.93	410335.6	2006		54522	1 Urbis LED	Axia 16 LED 500mA	28 Watts	6.00 Metres	Stainless Steel	
Y	16	STREET LIGHTING	OSPREY DRIVE	GREAT COATES	523605.12	410311.36	2006		54523	1 Urbis LED	Axia 16 LED 500mA	28 Watts	6.00 Metres	Stainless Steel	
Y	1	STREET LIGHTING	WAXWING WAY	GREAT COATES	523679.44	410395.63	2006		59911	1 Urbis LED	Axia 16 LED 500mA	28 Watts	6.00 Metres	Stainless Steel	
Y	2	STREET LIGHTING	WAXWING WAY	GREAT COATES	523675.99	410373.94	2006		59912	1 Urbis LED	Axia 16 LED 500mA	28 Watts	6.00 Metres	Stainless Steel	
Y	3	STREET LIGHTING	WAXWING WAY	GREAT COATES	523667.95	410361.23	2006		59913	1 Urbis LED	Axia 16 LED 500mA	28 Watts	6.00 Metres	Stainless Steel	
Y	4	STREET LIGHTING	WAXWING WAY	GREAT COATES	523642.2	410356.21	2006		59914	1 Urbis LED	Axia 16 LED 500mA	28 Watts	6.00 Metres	Stainless Steel	
Y	5	STREET LIGHTING	WAXWING WAY	GREAT COATES	523614.42	410352.06	2006		59915	1 Urbis LED	Axia 16 LED 500mA	28 Watts	6.00 Metres	Stainless Steel	
Y	1	STREET LIGHTING	ROBIN WALK	GREAT COATES	523864.32	410409.2	2006		56198	Urbis	Axia 16 LED 350mA	19 Watts	6.00 Metres	Galvanised Steel	
Y	2	STREET LIGHTING	ROBIN WALK	GREAT COATES	523839.23	410415.45	2006		56199	Urbis	Axia 16 LED 350mA	19 Watts	6.00 Metres	Galvanised Steel	
Y	3	STREET LIGHTING	ROBIN WALK	GREAT COATES	523807.92	410424.08	2006		56200	Urbis	Axia 16 LED 350mA	19 Watts	6.00 Metres	Galvanised Steel	
Y	4	STREET LIGHTING	ROBIN WALK	GREAT COATES	523785.17	410429.44	2006		56201	Urbis	Axia 16 LED 350mA	19 Watts	6.00 Metres	Galvanised Steel	
Y	5	STREET LIGHTING	ROBIN WALK	GREAT COATES	523758.56	410440.31	2006		56202	Urbis	Axia 16 LED 350mA	19 Watts	6.00 Metres	Galvanised Steel	
Y	6	STREET LIGHTING	ROBIN WALK	GREAT COATES	523740	410427.75	2006		56203	Urbis	Axia 16 LED 350mA	19 Watts	6.00 Metres	Galvanised Steel	
Y	1	STREET LIGHTING	DUNOON COURT	GRIMSBY	524106.09	409856.42	2010		47654	Urbis	Axia 16 LED 350mA	19 Watts	6.00 Metres	Steel	
Y	2	STREET LIGHTING	DUNOON COURT	GRIMSBY	524094.12	409846.21	2010		47655	Urbis	Axia 16 LED 350mA	19 Watts	6.00 Metres	Steel	
Y	1	STREET LIGHTING	GRAYS COURT	GRIMSBY	524158.47	409873.12	2010		49527	Urbis	Axia 16 LED 350mA	19 Watts	6.00 Metres	Steel	
Y	1	STREET LIGHTING	TEES COURT	GRIMSBY	524154.64	409851.12	2010		58835	Urbis	Axia 8 LED 350mA	10 Watts	6.00 Metres	Steel	
Y	1	STREET LIGHTING	TRENT COURT	GRIMSBY	524185.82	409875.75	2010		66647	Urbis	Axia 8 LED 350mA	10 Watts	6.00 Metres	Steel	
Y	2	STREET LIGHTING	TRENT COURT	GRIMSBY	524169.33	409873.97	2010		59423	Urbis	Axia 8 LED 350mA	10 Watts	6.00 Metres	Steel	
Y	3	STREET LIGHTING	TRENT COURT	GRIMSBY	524168.9	409858.93	2010		59424	Urbis	Axia 8 LED 350mA	10 Watts	6.00 Metres	Steel	
Y	4	STREET LIGHTING	TRENT COURT	GRIMSBY	524181.17	409857.48	2010		59425	Urbis	Axia 8 LED 350mA	10 Watts	6.00 Metres	Steel	
Y	1	STREET LIGHTING	ADAM SMITH STREET	GRIMSBY	526375.41	410265.92	2018	18/06/2018	42730	Urbis	AXIA 3.2 24 LED 540mA	41 Watts	8.00 Metres	Galvanised Steel	
Y	2	STREET LIGHTING	ADAM SMITH STREET	GRIMSBY	526413.34	410265.27	2018	18/06/2018	42731	Urbis	AXIA 3.2 24 LED 540mA	41 Watts	8.00 Metres	Galvanised Steel	
Y	3	STREET LIGHTING	ADAM SMITH STREET	GRIMSBY	526451.45	410264.35	2018	18/06/2018	42732	1 Urbis LED	Teceo 32 LED 500mA	52 Watts	8.00 Metres	Galvanised Steel	
Y	4	STREET LIGHTING	ADAM SMITH STREET	GRIMSBY	526486.8	410263.52	1999		42733	1 Urbis LED	Teceo 40 LED 500mA	64 Watts	8.00 Metres	Galvanised Steel	
Y	5	STREET LIGHTING	ADAM SMITH STREET	GRIMSBY	526524.92	410262.69	2013	06/08/2013	42734	1 Urbis LED	Teceo 32 LED 500mA	52 Watts	8.00 Metres	Galvanised Steel	
Y	6	STREET LIGHTING	ADAM SMITH STREET	GRIMSBY	526558.06	410261.87	2018	18/06/2018	42735	Urbis	AXIA 3.2 24 LED 540mA	41 Watts	8.00 Metres	Galvanised Steel	
Y	7	STREET LIGHTING	ADAM SMITH STREET	GRIMSBY	526590.42	410261.2	2008		42736	1 Urbis LED	Teceo 32 LED 500mA	52 Watts	8.00 Metres	Steel	
Y	8	STREET LIGHTING	ADAM SMITH STREET	GRIMSBY	526620.43	410260.46	1999		42737	1 Urbis LED	Teceo 40 LED 500mA	64 Watts	8.00 Metres	Galvanised Steel	
Y	9	STREET LIGHTING	ADAM SMITH STREET	GRIMSBY	526647.68	410259.63	2008		42738	1 Urbis LED	Teceo 32 LED 500mA	52 Watts	8.00 Metres	Steel	
Y	10	STREET LIGHTING	ADAM SMITH STREET	GRIMSBY	526696.28	410258.71	2018	18/06/2018	42739	1 Urbis LED	Teceo 32 LED 500mA	52 Watts	8.00 Metres	Galvanised Steel	
Y	11	STREET LIGHTING	ADAM SMITH STREET	GRIMSBY	526733.84	410257.63	2018	18/06/2018	42740	1 Urbis LED	Teceo 32 LED 500mA	52 Watts	8.00 Metres	Galvanised Steel	
Y	12	STREET LIGHTING	ADAM SMITH STREET	GRIMSBY	526766.61	410256.9	2013	06/08/2013	42741	1 Urbis LED	Teceo 40 LED 500mA	64 Watts	8.00 Metres	Galvanised Steel	
Y	13	STREET LIGHTING	ADAM SMITH STREET	GRIMSBY	526800.68	410256.07	1970		42742	1 Urbis LED	Teceo 32 LED 500mA	52 Watts	8.00 Metres	Galvanised Steel	
Y	14	STREET LIGHTING	ADAM SMITH STREET	GRIMSBY	526838.42	410255.42	2000		42743	1 Urbis LED	Teceo 32 LED 500mA	52 Watts	8.00 Metres	Galvanised Steel	
Y	15	STREET LIGHTING	ADAM SMITH STREET	GRIMSBY	526864.93	410254.87	2018	18/06/2018	42744	1 Urbis LED	Teceo 32 LED 500mA	52 Watts	8.00 Metres	Galvanised Steel	
Y	1	STREET LIGHTING	ALFRED STREET	GRIMSBY	526729.45	409847.7	1997		43061	Urbis	Axia 16 LED 350mA	19 Watts	6.00 Metres	Galvanised Steel	
Y	2	STREET LIGHTING	ALFRED STREET	GRIMSBY	526712.99	409813.72	1997		43062	Urbis	Axia 16 LED 350mA	19 Watts	6.00 Metres	Galvanised Steel	
Y	3	STREET LIGHTING	ALFRED STREET	GRIMSBY	526707.42	409805.05	1963		43063	Urbis	Axia 16 LED 350mA	19 Watts	5.00 Metres	Steel	
Y	1	STREET LIGHTING	ANNESLEY STREET	GRIMSBY	526722.43	410248.86	1996		43242	1 Urbis LED	Teceo 40 LED 500mA	64 Watts	8.00 Metres	Galvanised Steel	
Y	2	STREET LIGHTING	ANNESLEY STREET	GRIMSBY	526710.16	410210.77	2018	24/05/2018	66964	1 Urbis LED	Teceo 40 LED 500mA	64 Watts	8.00 Metres	Galvanised Steel	
Y	3	STREET LIGHTING	ANNESLEY STREET	GRIMSBY	526704.2	410182.95	1996		43244	1 Urbis LED	Teceo 40 LED 500mA	64 Watts	8.00 Metres	Galvanised Steel	
Y	4	STREET LIGHTING	ANNESLEY STREET	GRIMSBY	526679.63	410181.61	2018	24/05/2018	66965	1 Urbis LED	Teceo 40 LED 500mA	64 Watts	8.00 Metres	Galvanised Steel	
Y	1	STREET LIGHTING	ARMSTRONG PLACE EAST	GRIMSBY	526301.76	410151.17	2004		43330	1 Urbis LED	Axia 16 LED 500mA	28 Watts	6.00 Metres	Stainless Steel	
Y	2	STREET LIGHTING	ARMSTRONG PLACE EAST	GRIMSBY	526284.38	410182.32	2004		43331	1 Urbis LED	Axia 16 LED 500mA	28 Watts	6.00 Metres	Stainless Steel	
Y	3	STREET LIGHTING	ARMSTRONG PLACE EAST	GRIMSBY	526302.93	410211.03	2004		43332	1 Urbis LED	Axia 16 LED 500mA	28 Watts	6.00 Metres	Stainless Steel	
Y	1	STREET LIGHTING	ARMSTRONG PLACE WEST	GRIMSBY	526247.64	410139.13	1999		43333	Urbis	Axia 16 LED 350mA	19 Watts	6.00 Metres	Galvanised Steel	
Y	2	STREET LIGHTING	ARMSTRONG PLACE WEST	GRIMSBY	526252.45	410168.56	2015	30/07/2015	43334	Urbis	Axia 16 LED 350mA	19 Watts	6.00 Metres	Galvanised Steel	
Y	1	STREET LIGHTING	ARMSTRONG STREET	GRIMSBY	526836.43	410100.17	2018	25/06/2018	43335	1 Urbis LED	Teceo 40 LED 500mA	64 Watts	8.00 Metres	Galvanised Steel	
Y	2	STREET LIGHTING	ARMSTRONG STREET	GRIMSBY	526796.11	410114.44	2018	25/06/2018	43336	1 Urbis LED	Teceo 40 LED 500mA	64 Watts	8.00 Metres	Galvanised Steel	
Y	3	STREET LIGHTING	ARMSTRONG STREET	GRIMSBY	526764.99	410101.83	2018	25/06/2018	43337	1 Urbis LED	Teceo 40 LED 500mA	64 Watts	8.00 Metres	Galvanised Steel	
Y	4	STREET LIGHTING	ARMSTRONG STREET	GRIMSBY	526742.9	410115.83	2018	25/06/2018	43338	1 Urbis LED	Teceo 40 LED 500mA	64 Watts	8.00 Metres	Galvanised Steel	
Y	5	STREET LIGHTING	ARMSTRONG STREET	GRIMSBY	526716.75	410102.85	2018	25/06/2018	43339	1 Urbis LED	Teceo 40 LED 500mA	64 Watts	8.00 Metres	Galvanised Steel	
Y	6	STREET LIGHTING	ARMSTRONG STREET	GRIMSBY	526693.92	410116.84	2002		43340	1 Urbis LED	Teceo 40 LED 500mA	64 Watts	8.00 Metres	Galvanised Steel	
Y	7	STREET LIGHTING	ARMSTRONG STREET	GRIMSBY	526664.1	410104.04	2018	25/06/2018	43341	1 Urbis LED	Teceo 40 LED 500mA	64 Watts	8.00 Metres	Galvanised Steel	
Y	8	STREET LIGHTING	ARMSTRONG STREET	GRIMSBY	526639.44	410104.6	2004		43342	1 Urbis LED	Teceo 40 LED 500mA	64 Watts	8.00 Metres	Stainless Steel	
Y	9	STREET LIGHTING	ARMSTRONG STREET	GRIMSBY	526610.7	410105.15	2018	25/06/2018	43343	1 Urbis LED	Teceo 40 LED 500mA	64 Watts	8.00 Metres	Galvanised Steel	
Y	10	STREET LIGHTING	ARMSTRONG STREET	GRIMSBY	526586.4	410105.98	2018	25/06/2018	43344	1 Urbis LED	Teceo 40 LED 500mA	64 Watts	8.00 Metres	Galvanised Steel	
Y	11	STREET LIGHTING	ARMSTRONG STREET	GRIMSBY	526552.52	410106.9	2018	25/06/2018	43345	1 Urbis LED	Teceo 40 LED 500mA	64 Watts	8.00 Metres	Galvanised Steel	
Y	12	STREET LIGHTING	ARMSTRONG STREET	GRIMSBY	526517.1	410107.77	2018	25/06/2018	43346	1 Urbis LED	Teceo 40 LED 500mA	64 Watts	8.00 Metres	Galvanised Steel	
Y	13	STREET LIGHTING	ARMSTRONG STREET	GRIMSBY	526483.28	410122.45	2018	25/06/2018	43347	1 Urbis LED	Teceo 40 LED 500mA	64 Watts	8.00 Metres	Galvanised Steel	
Y	14	STREET LIGHTING	ARMSTRONG STREET	GRIMSBY	526449.66	410109.6	2018	25/06/2018	43348	1 Urbis LED	Teceo 40 LED 500mA	64 Watts	8.00 Metres	Galvanised Steel	
Y	15	STREET LIGHTING	ARMSTRONG STREET	GRIMSBY	526409.22	410110.5	2018	25/06/2018	43349	1 Urbis LED	Teceo 40 LED 500mA	64 Watts	8.00 Metres	Galvanised Steel	
Y	16	STREET LIGHTING	ARMSTRONG STREET	GRIMSBY	526373.69	410124.77	2018	25/06/2018	43350	1 Urbis LED	Teceo 40 LED 500mA	64 Watts	8.00 Metres	Galvanised Steel	
Y	17	STREET LIGHTING	ARMSTRONG STREET	GRIMSBY	526295.12	410117.57	2004		43351	1 Urbis LED	Teceo 32 LED 500mA	52 Watts	6.00 Metres	Stainless Steel	
Y	18	STREET LIGHTING	ARMSTRONG STREET	GRIMSBY	526267.77	410128.06	1989		43352	1 Urbis LED	Teceo 32 LED 500mA	52 Watts	5.00 Metres	Steel	
Y	19	STREET LIGHTING	ARMSTRONG STREET	GRIMSBY	526183.34	410118.95	1993		43353	1 Urbis LED	Teceo 32 LED 500mA	52 Watts	8.00 Metres	Galvanised Steel	
Y	20	STREET LIGHTING	ARMSTRONG STREET	GRIMSBY	526149.36	410137.33	2008		43354	1 Urbis LED	Teceo 32 LED 500mA	52 Watts	8.00 Metres	Galvanised Steel	
Y	21	STREET LIGHTING	ARMSTRONG STREET	GRIMSBY	526116.89	410136.67	1989		43355	1 Urbis LED	Teceo 32 LED 500mA	52 Watts	8.00 Metres	Galvanised Steel	
Y	22	STREET LIGHTING	ARMSTRONG STREET	GRIMSBY	526094.99	410165.47	1989		43356	1 Urbis LED	Teceo 32 LED 500mA	52 Watts	8.00 Metres	Galvanised Steel	
Y	1	STREET LIGHTING	AYSCOUGH STREET	GRIMSBY	526427.99	410094.1	2018	30/05/2018	43561	1 Urbis LED	Teceo 40 LED 500mA	64 Watts	8.00 Metres	Galvanised Steel	
Y	2	STREET LIGHTING	AYSCOUGH STREET	GRIMSBY	526416.04	410062.41	2018	30/05/2018	43562	1 Urbis LED	Teceo 40 LED 500mA	64 Watts	8.00 Metres	Galvanised Steel	
Y	3	STREET LIGHTING	AYSCOUGH STREET	GRIMSBY	526422.93	410033.04	2018	30/05/2018	43563	1 Urbis LED	Teceo 40 LED 500mA	64 Watts	8.00 Metres	Galvanised Steel	
Y	4	STREET LIGHTING	AYSCOUGH STREET	GRIMSBY	526414.31	409991.41	2015	30/07/2015	43564	1 Urbis LED	Teceo 24 LED 500mA	40 Watts	6.00 Metres	Galvanised Steel	
Y	1	STREET LIGHTING	BEESON STREET	GRIMSBY	526189.32	410023.25	1992		43951	Urbis	Axia 16 LED 350mA	19 Watts	6.00 Metres	Galvanised Steel	
Y	2	STREET LIGHTING	BEESON STREET	GRIMSBY	526205.53	410043.94	1992		43952	Urbis	Axia 16 LED 350mA	19 Watts	6.00 Metres	Galvanised Steel	
Y	3	STREET LIGHTING	BEESON STREET	GRIMSBY	526200.84	410069.32	1992		43953	Urbis	Axia 16 LED 350mA	19 Watts	6.00 Metres	Galvanised Steel	
Y	4	STREET LIGHTING	BEESON STREET	GRIMSBY	526207.3	410094.01	1992		43954	Urbis	Axia 16 LED 350mA	19 Watts	6.00 Metres	Galvanised Steel	
Y	5	STREET LIGHTING	BEESON STREET	GRIMSBY	526213.12	410116.6	1992		43955	Urbis	Axia 16 LED 350mA	19 Watts	6.00 Metres	Galvanised Steel	
Y	1	STREET LIGHTING	BRIDGE GARDENS	GRIMSBY	525485.55	410277.35	2019	07/10/2019	67521	Urbis	Axia 16 LED 350mA	19 Watts	6.00 Metres	Galvanised Steel	
Y	2	STREET LIGHTING	BRIDGE GARDENS	GRIMSBY	525512.07	410299.89	1988		44689	Urbis	Axia 16 LED 350mA	19 Watts	5.00 Metres	Galvanised Steel	

Y	1	STREET LIGHTING	CHAPMAN COURT	GRIMSBY	526511.04	409899.46	2020	10/08/2020	67978	Urbis	Axia 16 LED 350mA	19 Watts	6.00 Metres	Galvanised Steel	
Y	2	STREET LIGHTING	CHAPMAN COURT	GRIMSBY	526508.87	409927.33	2020	10/08/2020	68253	Urbis	Axia 24 LED 540mA	26 Watts	6.00 Metres	Galvanised Steel	
Y	3	STREET LIGHTING	CHAPMAN COURT	GRIMSBY	526468.61	409920.29	2020	10/08/2020	68254	Urbis	Axia 24 LED 540mA	26 Watts	6.00 Metres	Galvanised Steel	
Y	1	STREET LIGHTING	CHARLTON STREET	GRIMSBY	526359.12	410020.45	2003		45662	1 Urbis LED	Teceo 48 LED 500mA	79 Watts	8.00 Metres	Stainless Steel	
Y	2	STREET LIGHTING	CHARLTON STREET	GRIMSBY	526359.05	410065.88	2002		45663	1 Urbis LED	Teceo 48 LED 500mA	79 Watts	8.00 Metres	Galvanised Steel	
Y	3	STREET LIGHTING	CHARLTON STREET	GRIMSBY	526350.57	410135.06	2018	18/06/2018	45664	1 Urbis LED	Teceo 48 LED 500mA	79 Watts	8.00 Metres	Galvanised Steel	
Y	4	STREET LIGHTING	CHARLTON STREET	GRIMSBY	526353.87	410233.48	2022	29/09/2022	69022	Urbis	Teceo 48 LED 500mA	79 Watts	8.00 Metres	Galvanised Steel	
Y	5	STREET LIGHTING	CHARLTON STREET	GRIMSBY	526351.67	410205.9	2008		45666	1 Urbis LED	Teceo 48 LED 500mA	79 Watts	8.00 Metres	Steel	
Y	6	STREET LIGHTING	CHARLTON STREET	GRIMSBY	526366.85	410240.49	2008		45667	1 Urbis LED	Teceo 48 LED 500mA	79 Watts	8.00 Metres	Steel	
Y	7	STREET LIGHTING	CHARLTON STREET	GRIMSBY	526367.28	410257.47	2018	18/06/2018	45668	Urbis	AXIA 3.2 32 LED 630 mA	62 Watts	8.00 Metres	Galvanised Steel	
Y	1	STREET LIGHTING	CLAVERING STREET	GRIMSBY	525798.13	410263.8	1991		46137	1 Urbis LED	Axia 16 LED 500mA	28 Watts	6.00 Metres	Galvanised Steel	
Y	2	STREET LIGHTING	CLAVERING STREET	GRIMSBY	525775.98	410235.38	1991		46138	1 Urbis LED	Axia 16 LED 500mA	28 Watts	6.00 Metres	Galvanised Steel	
Y	3	STREET LIGHTING	CLAVERING STREET	GRIMSBY	525762.69	410202.47	1991		46139	1 Urbis LED	Axia 16 LED 500mA	28 Watts	6.00 Metres	Galvanised Steel	
Y	4	STREET LIGHTING	CLAVERING STREET	GRIMSBY	525760.92	410172.28	1994		46140	1 Urbis LED	Axia 16 LED 500mA	28 Watts	6.00 Metres	Galvanised Steel	
Y	5	STREET LIGHTING	CLAVERING STREET	GRIMSBY	525751.05	410150.13	1991		46141	1 Urbis LED	Axia 16 LED 500mA	28 Watts	6.00 Metres	Galvanised Steel	
Y	6	STREET LIGHTING	CLAVERING STREET	GRIMSBY	525734.84	410136.97	1991		46142	1 Urbis LED	Axia 16 LED 500mA	28 Watts	6.00 Metres	Galvanised Steel	
Y	1	STREET LIGHTING	CLEVELAND GARDENS	GRIMSBY	525535.43	410237.96	1988		46303	Urbis	Axia 16 LED 350mA	19 Watts	6.00 Metres	Galvanised Steel	
Y	2	STREET LIGHTING	CLEVELAND GARDENS	GRIMSBY	525551.51	410268.97	1988		46304	Urbis	Axia 16 LED 350mA	19 Watts	5.00 Metres	Galvanised Steel	
Y	1	STREET LIGHTING	CLEVELAND STREET	GRIMSBY	525659.35	410289.79	1988		46305	1 Urbis LED	Teceo 24 LED 500mA	40 Watts	6.00 Metres	Galvanised Steel	
Y	2	STREET LIGHTING	CLEVELAND STREET	GRIMSBY	525645.18	410257.13	1988		46306	1 Urbis LED	Teceo 24 LED 500mA	40 Watts	6.00 Metres	Galvanised Steel	
Y	3	STREET LIGHTING	CLEVELAND STREET	GRIMSBY	525641.25	410224.22	1988		46307	1 Urbis LED	Teceo 24 LED 500mA	40 Watts	6.00 Metres	Galvanised Steel	
Y	4	STREET LIGHTING	CLEVELAND STREET	GRIMSBY	525627.2	410191.88	1988		46308	1 Urbis LED	Teceo 24 LED 500mA	40 Watts	6.00 Metres	Galvanised Steel	
Y	1	STREET LIGHTING	FOOTPATH BETWEEN CLEVELAND	GRIMSBY	525662.77	410177.14	2023	14/02/2023	69206	Urbis	Axia 8 LED 350mA	10 Watts	6.00 Metres	Steel	
Y	2	STREET LIGHTING	FOOTPATH BETWEEN CLEVELAND	GRIMSBY	525642.91	410186.82	2023	14/02/2023	69891	Urbis	Axia 8 LED 350mA	10 Watts	6.00 Metres	Steel	
Y	1	STREET LIGHTING	DUNMOW STREET	GRIMSBY	525982.26	410189.86	1991		47647	1 Urbis LED	Axia 16 LED 500mA	28 Watts	6.00 Metres	Galvanised Steel	
Y	2	STREET LIGHTING	DUNMOW STREET	GRIMSBY	525973.53	410168.03	1991		47648	1 Urbis LED	Axia 16 LED 500mA	28 Watts	6.00 Metres	Galvanised Steel	
Y	3	STREET LIGHTING	DUNMOW STREET	GRIMSBY	525953.78	410144.17	1991		47649	1 Urbis LED	Axia 16 LED 500mA	28 Watts	6.00 Metres	Galvanised Steel	
Y	4	STREET LIGHTING	DUNMOW STREET	GRIMSBY	525952.77	410116.82	1991		47650	1 Urbis LED	Axia 16 LED 500mA	28 Watts	6.00 Metres	Galvanised Steel	
Y	5	STREET LIGHTING	DUNMOW STREET	GRIMSBY	525942.77	410092.84	1991		47651	1 Urbis LED	Axia 16 LED 500mA	28 Watts	6.00 Metres	Galvanised Steel	
Y	6	STREET LIGHTING	DUNMOW STREET	GRIMSBY	525923.15	410072.96	1991		47652	1 Urbis LED	Axia 16 LED 500mA	28 Watts	6.00 Metres	Galvanised Steel	
Y	7	STREET LIGHTING	DUNMOW STREET	GRIMSBY	525913.02	410049.67	1991		47653	1 Urbis LED	Axia 16 LED 500mA	28 Watts	6.00 Metres	Galvanised Steel	
Y	1	STREET LIGHTING	EDMONDS WAY	GRIMSBY	526639.63	409746.43	1968		47847	1 Urbis LED	Axia 16 LED 500mA	28 Watts	5.00 Metres	Steel	
Y	2	STREET LIGHTING	EDMONDS WAY	GRIMSBY	526612.67	409752.63	1968		47848	1 Urbis LED	Axia 16 LED 500mA	28 Watts	5.00 Metres	Steel	
Y	3	STREET LIGHTING	EDMONDS WAY	GRIMSBY	526590.77	409743.2	1968		47849	1 Urbis LED	Axia 16 LED 500mA	28 Watts	5.00 Metres	Steel	
Y	4	STREET LIGHTING	EDMONDS WAY	GRIMSBY	526610.89	409787.63	1968		47850	1 Urbis LED	Axia 16 LED 500mA	28 Watts	5.00 Metres	Steel	
Y	5	STREET LIGHTING	EDMONDS WAY	GRIMSBY	526586.08	409775.48	1968		47851	1 Urbis LED	Axia 16 LED 500mA	28 Watts	5.00 Metres	Steel	
Y	1	STREET LIGHTING	ELSENHAM ROAD	GRIMSBY	526067.2	410164.33	1998		47983	1 Urbis LED	Axia 16 LED 500mA	28 Watts	6.00 Metres	Galvanised Steel	
Y	2	STREET LIGHTING	ELSENHAM ROAD	GRIMSBY	526043.27	410187.43	1998		47984	1 Urbis LED	Axia 16 LED 500mA	28 Watts	6.00 Metres	Galvanised Steel	
Y	3	STREET LIGHTING	ELSENHAM ROAD	GRIMSBY	526016.95	410198	1998		47985	1 Urbis LED	Axia 16 LED 500mA	28 Watts	6.00 Metres	Galvanised Steel	
Y	4	STREET LIGHTING	ELSENHAM ROAD	GRIMSBY	525986.44	410210.16	1998		47986	1 Urbis LED	Axia 16 LED 500mA	28 Watts	6.00 Metres	Galvanised Steel	
Y	5	STREET LIGHTING	ELSENHAM ROAD	GRIMSBY	525951.25	410211.1	1998		47987	1 Urbis LED	Axia 16 LED 500mA	28 Watts	6.00 Metres	Galvanised Steel	
Y	6	STREET LIGHTING	ELSENHAM ROAD	GRIMSBY	525924.8	410234.78	1998		47988	1 Urbis LED	Axia 16 LED 500mA	28 Watts	6.00 Metres	Galvanised Steel	
Y	7	STREET LIGHTING	ELSENHAM ROAD	GRIMSBY	525891	410235.66	1998		47989	1 Urbis LED	Axia 16 LED 500mA	28 Watts	6.00 Metres	Galvanised Steel	
Y	8	STREET LIGHTING	ELSENHAM ROAD	GRIMSBY	525868.35	410257.75	1998		47990	1 Urbis LED	Axia 16 LED 500mA	28 Watts	6.00 Metres	Galvanised Steel	
Y	9	STREET LIGHTING	ELSENHAM ROAD	GRIMSBY	525836.07	410257.75	1998		47991	1 Urbis LED	Axia 16 LED 500mA	28 Watts	6.00 Metres	Galvanised Steel	
Y	10	STREET LIGHTING	ELSENHAM ROAD	GRIMSBY	525809.23	410281.23	1998		47992	1 Urbis LED	Axia 16 LED 500mA	28 Watts	6.00 Metres	Galvanised Steel	
Y	11	STREET LIGHTING	ELSENHAM ROAD	GRIMSBY	525784.05	410278.32	1998		47993	1 Urbis LED	Axia 16 LED 500mA	28 Watts	6.00 Metres	Galvanised Steel	
Y	12	STREET LIGHTING	ELSENHAM ROAD	GRIMSBY	525761.51	410287.25	1998		47994	1 Urbis LED	Axia 16 LED 500mA	28 Watts	6.00 Metres	Galvanised Steel	
Y	13	STREET LIGHTING	ELSENHAM ROAD	GRIMSBY	525730.88	410299.65	1998		47995	1 Urbis LED	Axia 16 LED 500mA	28 Watts	6.00 Metres	Galvanised Steel	
Y	14	STREET LIGHTING	ELSENHAM ROAD	GRIMSBY	525710.38	410320.86	1998		47996	1 Urbis LED	Axia 16 LED 500mA	28 Watts	6.00 Metres	Galvanised Steel	
Y	1	STREET LIGHTING	FARNDALE WAY	GRIMSBY	526690.94	409932	2014		48421	Urbis	Axia 8 LED 350mA	10 Watts	6.00 Metres	Galvanised Steel	
Y	2	STREET LIGHTING	FARNDALE WAY	GRIMSBY	526690.43	409900.67	2014		48422	Urbis	Axia 8 LED 350mA	10 Watts	6.00 Metres	Galvanised Steel	
Y	3	STREET LIGHTING	FARNDALE WAY	GRIMSBY	526670.08	409874.22	1963		48423	Urbis	Axia 8 LED 350mA	10 Watts	5.00 Metres	Steel	
Y	1	STREET LIGHTING	ELIZABETH MEWS	GRIMSBY	526703.36	409751.43	2012		66483	1 Urbis LED	Teceo 16 LED 500mA	28 Watts	6.00 Metres	Steel	
Y	2	STREET LIGHTING	ELIZABETH MEWS	GRIMSBY	526727.22	409712.74	2012		66484	1 Urbis LED	Teceo 16 LED 500mA	28 Watts	6.00 Metres	Steel	
Y	3	STREET LIGHTING	ELIZABETH MEWS	GRIMSBY	526698.43	409710.21	2012		66485	1 Urbis LED	Teceo 16 LED 500mA	28 Watts	6.00 Metres	Steel	
Y	4	STREET LIGHTING	ELIZABETH MEWS	GRIMSBY	526699.83	409732.09	2012		66486	1 Urbis LED	Teceo 16 LED 500mA	28 Watts	6.00 Metres	Steel	
Y	5	STREET LIGHTING	ELIZABETH MEWS	GRIMSBY	526681.52	409738.42	2012		66489	1 Urbis LED	Teceo 16 LED 500mA	28 Watts	6.00 Metres	Galvanised Steel	
Y	6	STREET LIGHTING	ELIZABETH MEWS	GRIMSBY	526666.17	409733.64	2012		66488	1 Urbis LED	Teceo 24 LED 500mA	40 Watts	6.00 Metres	Steel	
Y	7	STREET LIGHTING	ELIZABETH MEWS	GRIMSBY	526646.72	409750.11	2012		66487	1 Urbis LED	Teceo 16 LED 500mA	28 Watts	6.00 Metres	Steel	
Y	1	STREET LIGHTING	FREDERICK STREET	GRIMSBY	526764.5	409753.84	2007		48936	1 Urbis LED	Teceo 24 LED 500mA	40 Watts	8.00 Metres	Steel	
Y	2	STREET LIGHTING	FREDERICK STREET	GRIMSBY	526736.46	409759.27	2007		48937	1 Urbis LED	Teceo 24 LED 500mA	40 Watts	8.00 Metres	Steel	
Y	3	STREET LIGHTING	FREDERICK STREET	GRIMSBY	526703.53	409754.39	2007		48938	1 Urbis LED	Teceo 24 LED 500mA	40 Watts	8.00 Metres	Steel	
Y	4	STREET LIGHTING	FREDERICK STREET	GRIMSBY	526667.14	409761.39	2007		48939	1 Urbis LED	Teceo 24 LED 500mA	40 Watts	8.00 Metres	Steel	
Y	5	STREET LIGHTING	FREDERICK STREET	GRIMSBY	526637.19	409771.38	2007		48940	1 Urbis LED	Teceo 24 LED 500mA	40 Watts	8.00 Metres	Steel	
Y	6	STREET LIGHTING	FREDERICK STREET	GRIMSBY	526644.8	409803.44	2007		48941	1 Urbis LED	Teceo 24 LED 500mA	40 Watts	8.00 Metres	Steel	
Y	7	STREET LIGHTING	FREDERICK STREET	GRIMSBY	526635.07	409833.62	2007		48942	1 Urbis LED	Teceo 24 LED 500mA	40 Watts	8.00 Metres	Steel	
Y	8	STREET LIGHTING	FREDERICK STREET	GRIMSBY	526646.13	409862.99	2007		48943	1 Urbis LED	Teceo 24 LED 500mA	40 Watts	8.00 Metres	Steel	
Y	9	STREET LIGHTING	FREDERICK STREET	GRIMSBY	526628.56	409885.25	2007		48944	1 Urbis LED	Teceo 24 LED 500mA	40 Watts	8.00 Metres	Steel	
Y	10	STREET LIGHTING	FREDERICK STREET	GRIMSBY	526592.91	409875.88	2007		48945	1 Urbis LED	Teceo 24 LED 500mA	40 Watts	8.00 Metres	Steel	
Y	11	STREET LIGHTING	FREDERICK STREET	GRIMSBY	526561.65	409887.98	2007		48946	1 Urbis LED	Teceo 24 LED 500mA	40 Watts	8.00 Metres	Steel	
Y	12	STREET LIGHTING	FREDERICK STREET	GRIMSBY	526527.89	409888.93	2007		48947	1 Urbis LED	Teceo 24 LED 500mA	40 Watts	8.00 Metres	Steel	
Y	13	STREET LIGHTING	FREDERICK STREET	GRIMSBY	526495.13	409878.25	2007		48948	1 Urbis LED	Teceo 24 LED 500mA	40 Watts	8.00 Metres	Steel	
Y	14	STREET LIGHTING	FREDERICK STREET	GRIMSBY	526465.91	409879.11	2007		48949	1 Urbis LED	Teceo 24 LED 500mA	40 Watts	8.00 Metres	Steel	
Y	15	STREET LIGHTING	FREDERICK STREET	GRIMSBY	526437.78	409890.82	2007		48950	1 Urbis LED	Teceo 24 LED 500mA	40 Watts	8.00 Metres	Steel	
Y	1	STREET LIGHTING	FRESHNEY DRIVE	GRIMSBY			2024	22/08/2024	69847	Urbis	Teceo 32 LED 500mA	52 Watts	8.00 Metres	Galvanised Steel	
Y	2	STREET LIGHTING	FRESHNEY DRIVE	GRIMSBY			2024	20/03/2024	69848				6.00 Metres	Galvanised Steel	
Y	3	STREET LIGHTING	FRESHNEY DRIVE	GRIMSBY			2024	20/03/2024	69849				8.00 Metres	Galvanised Steel	
Y	4	STREET LIGHTING	FRESHNEY DRIVE	GRIMSBY	526412.15	409885.93	2013	13/08/2013	49020	1 Urbis LED	Teceo 32 LED 500mA	52 Watts	8.00 Metres	Galvanised Steel	
Y	5	STREET LIGHTING	FRESHNEY DRIVE	GRIMSBY	526384.33	409877.48	1996		49021	1 Urbis LED	Teceo 24 LED 500mA	40 Watts	5.00 Metres	Steel	
Y	6	STREET LIGHTING	FRESHNEY DRIVE	GRIMSBY			2024	22/08/2024	69988	Urbis	Teceo 32 LED 500mA	52 Watts	8.00 Metres	Galvanised Steel	
Y	7	STREET LIGHTING	FRESHNEY DRIVE	GRIMSBY			2024	22/08/2024	69989	Urbis	Teceo 32 LED 500mA	52 Watts	8.00 Metres	Galvanised Steel	
Y	8	STREET LIGHTING	FRESHNEY DRIVE	GRIMSBY			2024	22/08/2024	69990	Urbis	Teceo 32 LED 500mA	52 Watts	8.00 Metres	Galvanised Steel	
Y	9	STREET LIGHTING	FRESHNEY DRIVE	GRIMSBY	526477.6	409818.04	2020	14/01/2020	67517	Urbis	Teceo 32 LED 500mA	52 Watts	8.00 Metres	Galvanised Steel	
Y	10	STREET LIGHTING	FRESHNEY DRIVE	GRIMSBY			2024	22/08/2024	69991	Urbis	Teceo 32 LED 500mA	52 Watts	8.00 Metres	Galvanised Steel	
Y	11	STREET LIGHTING	FRESHNEY DRIVE	GRIMSBY	526479.34	409773.88	2014	09/12/2014	49027	1 Urbis LED	Teceo 32 LED 500mA	52 Watts	8.00 Metres	Galvanised Steel	
Y	1	STREET LIGHTING	FILDES STREET	GRIMSBY	526640.38	409570.86	1998		48542	1 Urbis LED	Axia 16 LED 500mA	28 Watts	6.00 Metres	Galvanised Steel	
Y	2	STREET LIGHTING	FILDES STREET	GRIMSBY	526635.94	409541.57	1998		48543	1 Urbis LED	Axia 16 LED 500mA	28 Watts	6.00 Metres	Galvanised Steel	
Y	3	STREET LIGHTING	FILDES STREET	GRIMSBY	526619.36	409516.83	1998		48544	1 Urbis LED	Axia 16 LED 500mA	28 Watts	6.00 Metres	Galvanised Steel	
Y	4	STREET LIGHTING	FILDES STREET	GRIMSBY	526615.06	409493.22	1998		48545	1 Urbis LED	Axia 16 LED 500mA	28 Watts	6.00 Metres	Galvanised Steel	
Y	1	STREET LIGHTING	GARTH LANE	GRIMSBY	526763.02	409543.93	2024	23/05/2024	69899	Urbis	Teceo 40 LED 500mA	64 Watts	8.00 Metres	Galvanised Steel	
Y	2	STREET LIGHTING	GARTH LANE	GRIMSBY	526794.56	409552.45	2020	31/03/2020	67819	Urbis	Teceo 40 LED 500mA	64 Watts	8.00 Metres	Galvanised Steel	
Y	3	STREET LIGHTING	GARTH LANE	GRIMSBY	526817.41	409559.36	1956		49118	1 Urbis LED	Teceo 40 LED 500mA	64 Watts	10.00 Metres	Steel	
Y	4	STREET LIGHTING	GARTH LANE	GRIMSBY	526845.39	409559.49	1956		49119	1 Urbis LED	Teceo 40 LED 500mA	64 Watts	10.00 Metres	Steel	
Y	5	STREET LIGHTING	GARTH LANE	GRIMSBY	526867.29	409575.63	1956		49120	1 Urbis LED	Teceo 40 LED 500mA	64 Watts	10.00 Metres	Steel	
Y	1	STREET LIGHTING	HARGRAVE STREET	GRIMSBY	525921.63	410215.12	1991		50177	1 Urbis LED	Axia 16 LED 500mA	28 Watts	6.00 Metres	Galvanised Steel	
Y	2	STREET LIGHTING	HARGRAVE STREET	GRIMSBY	525911	410188.41	1991		50178	1 Urbis LED	Axia 16 LED 500mA	28 Watts	6.00 Metres	Galvanised Steel	
Y	3	STREET LIGHTING	HARGRAVE STREET	GRIMSBY			2024	11/10/2024	69985	Urbis	Axia 24 LED 500mA	28 Watts	6.00 Metres	Galvanised Steel	
Y	5	STREET LIGHTING	HARGRAVE STREET	GRIMSBY	525882.65	410117.72	1991		50181	1 Urbis LED	Axia 16 LED 500mA	28 Watts	6.00 Metres	Galvanised Steel	
Y	7	STREET LIGHTING	HARGRAVE STREET	GRIMSBY	525853.66	410076.52	1991		50183	1 Urbis LED	Axia 16 LED 500mA	28 Watts	6.00 Metres	Galvanised Steel	
Y	1	STREET LIGHTING	HARLOW STREET	GRIMSBY	525738.26	410290.19	1988		50210	1 Urbis LED	Axia 16 LED 500mA	28 Watts	6.00 Metres	Galvanised Steel	
Y	2	STREET LIGHTING	HARLOW STREET	GRIMSBY	525717.76	410265.07	1988		50211	1 Urbis LED	Axia 16 LED 500mA	28 Watts	6.00 Metres	Galvanised Steel	
Y	3	STREET LIGHTING	HARLOW STREET	GRIMSBY	525713.07	410227.98	1988		50212	1 Urbis LED	Axia 16 LED 500mA	28 Watts	6.00 Metres	Galvanised Steel	
Y	4	STREET LIGHTING	HARLOW STREET	GRIMSBY	525701.43	410200.08	1988		50213	1 Urbis LED	Axia 16 LED 500mA	28 Watts	6.00 Metres	Galvanised Steel	
Y	5	STREET LIGHTING	HARLOW STREET	GRIMSBY	525684.59	410185.33	1988		50214	1 Urbis LED	Axia 16 LED 500mA	28 Watts	6.00 Metres	Galvanised Steel	
Y	6	STREET LIGHTING	HARLOW STREET	GRIMSBY	525675.6	410165.14	1988		50215	1 Urbis LED	Axia 16 LED 500mA	28 Watts	6.00 Metres	Galvanised Steel	
Y	1	STREET LIGHTING	JACKSON STREET	GRIMSBY	526346.32	409944.81	1990		51407	Urbis	Axia 16 LED 350mA	19 Watts	6.00 Metres	Galvanised Steel	
Y	2	STREET LIGHTING	JACKSON STREET	GRIMSBY	526357.45	409919.18	1990		51408	Urbis	Axia 16 LED 350mA	19 Watts	6.00 Metres	Galvanised Steel	
Y	3	STREET LIGHTING	JACKSON STREET	GRIMSBY	526356.82	409895.19	1990		51409	Urbis	Axia 16 LED 350mA	19 Watts	6.00 Metres	Galvanised Steel	
Y	4	STREET LIGHTING	JACKSON STREET	GRIMSBY	526344.67	409868.48	1990		51410	Urbis	Axia 16 LED 350mA	19 Watts	6.00 Metres	Galvanised Steel	

Y	5	STREET LIGHTING	JACKSON STREET	GRIMSBY	526344.04	409843.8	1990		51411	Urbis	Axia 16 LED 350mA	19 Watts	6.00 Metres	Galvanised Steel	
Y	1	STREET LIGHTING	MELROSE WAY	GRIMSBY	524251.71	409979.79	1999		53513	Urbis	Axia 8 LED 350mA	10 Watts	6.00 Metres	Galvanised Steel	
Y	2	STREET LIGHTING	MELROSE WAY	GRIMSBY	524293.29	409999.75	2011		53514	Urbis	Axia 8 LED 350mA	10 Watts	6.00 Metres	Steel	
Y	3	STREET LIGHTING	MELROSE WAY	GRIMSBY	524260	410007.15	2011		53515	Urbis	Axia 8 LED 350mA	10 Watts	6.00 Metres	Steel	
Y	4	STREET LIGHTING	MELROSE WAY	GRIMSBY			2011		66963	Urbis	Axia 8 LED 350mA	10 Watts	6.00 Metres	Steel	
Y	5	STREET LIGHTING	MELROSE WAY	GRIMSBY	524226.33	410012.41	2013		53528	Urbis	Axia 8 LED 350mA	10 Watts	6.00 Metres	Steel	
Y	6	STREET LIGHTING	MELROSE WAY	GRIMSBY	524213.16	410048.1	2011		53527	Urbis	Axia 8 LED 350mA	10 Watts	6.00 Metres	Steel	
Y	7	STREET LIGHTING	MELROSE WAY	GRIMSBY	524234.17	410065.95	2013		53526	Urbis	Axia 8 LED 350mA	10 Watts	6.00 Metres	Steel	
Y	8	STREET LIGHTING	MELROSE WAY	GRIMSBY	524264.93	410087.21	2016		53525	Urbis	Axia 8 LED 350mA	10 Watts	6.00 Metres	Steel	
Y	9	STREET LIGHTING	MELROSE WAY	GRIMSBY	524286.07	410101.83	2007		53524	Urbis	Axia 8 LED 350mA	10 Watts	6.00 Metres	Steel	
Y	10	STREET LIGHTING	MELROSE WAY	GRIMSBY	524284.21	410150.39	2013		53522	Urbis	Axia 8 LED 350mA	10 Watts	6.00 Metres	Steel	
Y	11	STREET LIGHTING	MELROSE WAY	GRIMSBY	524312.81	410123.21	2002		53523	Urbis	Axia 8 LED 350mA	10 Watts	6.00 Metres	Galvanised Steel	
Y	12	STREET LIGHTING	MELROSE WAY	GRIMSBY	524333.25	410146.5	2013		53521	Urbis	Axia 8 LED 350mA	10 Watts	6.00 Metres	Steel	
Y	1	STREET LIGHTING	MILL AVENUE	GRIMSBY	526060.34	409996.38	1999		53609	Urbis	Axia 16 LED 350mA	19 Watts	6.00 Metres	Steel	
Y	2	STREET LIGHTING	MILL AVENUE	GRIMSBY	526085.91	409979.8	1999		53610	Urbis	Axia 16 LED 350mA	19 Watts	6.00 Metres	Steel	
Y	1	STREET LIGHTING	NEWHAVEN TERRACE	GRIMSBY	526024.64	409987.21	1989		54095	Urbis	Axia 16 LED 350mA	19 Watts	6.00 Metres	Galvanised Steel	
Y	2	STREET LIGHTING	NEWHAVEN TERRACE	GRIMSBY	526004.59	409997.84	1989		54096	Urbis	Axia 16 LED 350mA	19 Watts	6.00 Metres	Galvanised Steel	
Y	3	STREET LIGHTING	NEWHAVEN TERRACE	GRIMSBY	525987.75	410006.96	1989		54097	Urbis	Axia 16 LED 350mA	19 Watts	6.00 Metres	Galvanised Steel	
Y	4	STREET LIGHTING	NEWHAVEN TERRACE	GRIMSBY	525961.8	410019.17	1989		54098	Urbis	Axia 16 LED 350mA	19 Watts	6.00 Metres	Galvanised Steel	
Y	5	STREET LIGHTING	NEWHAVEN TERRACE	GRIMSBY	525945.1	410026.51	1989		54099	Urbis	Axia 16 LED 350mA	19 Watts	6.00 Metres	Galvanised Steel	
Y	6	STREET LIGHTING	NEWHAVEN TERRACE	GRIMSBY	525926.74	410034.55	1989		54100	Urbis	Axia 16 LED 350mA	19 Watts	6.00 Metres	Galvanised Steel	
Y	7	STREET LIGHTING	NEWHAVEN TERRACE	GRIMSBY	525901.55	410045.63	1989		54101	Urbis	Axia 16 LED 350mA	19 Watts	6.00 Metres	Galvanised Steel	
Y	8	STREET LIGHTING	NEWHAVEN TERRACE	GRIMSBY	525885.6	410052.84	1989		54102	Urbis	Axia 16 LED 350mA	19 Watts	6.00 Metres	Galvanised Steel	
Y	9	STREET LIGHTING	NEWHAVEN TERRACE	GRIMSBY	525867	410061.19	1989		54103	Urbis	Axia 16 LED 350mA	19 Watts	6.00 Metres	Galvanised Steel	
Y	10	STREET LIGHTING	NEWHAVEN TERRACE	GRIMSBY	525847.76	410070.37	1989		54104	Urbis	Axia 16 LED 350mA	19 Watts	6.00 Metres	Galvanised Steel	
Y	11	STREET LIGHTING	NEWHAVEN TERRACE	GRIMSBY	525826.11	410081.51	1989		54105	Urbis	Axia 16 LED 350mA	19 Watts	6.00 Metres	Galvanised Steel	
Y	12	STREET LIGHTING	NEWHAVEN TERRACE	GRIMSBY	525803.71	410092.45	1989		54106	Urbis	Axia 16 LED 350mA	19 Watts	6.00 Metres	Galvanised Steel	
Y	13	STREET LIGHTING	NEWHAVEN TERRACE	GRIMSBY	525787.88	410101.31	1989		54107	Urbis	Axia 16 LED 350mA	19 Watts	6.00 Metres	Galvanised Steel	
Y	14	STREET LIGHTING	NEWHAVEN TERRACE	GRIMSBY	525769.15	410110.81	1989		54108	Urbis	Axia 16 LED 350mA	19 Watts	6.00 Metres	Galvanised Steel	
Y	15	STREET LIGHTING	NEWHAVEN TERRACE	GRIMSBY	525744.59	410123.15	1989		54109	Urbis	Axia 16 LED 350mA	19 Watts	6.00 Metres	Galvanised Steel	
Y	16	STREET LIGHTING	NEWHAVEN TERRACE	GRIMSBY	525726.49	410132.2	1989		54110	Urbis	Axia 16 LED 350mA	19 Watts	6.00 Metres	Galvanised Steel	
Y	17	STREET LIGHTING	NEWHAVEN TERRACE	GRIMSBY	525707.13	410141.88	1989		54111	Urbis	Axia 16 LED 350mA	19 Watts	6.00 Metres	Galvanised Steel	
Y	18	STREET LIGHTING	NEWHAVEN TERRACE	GRIMSBY	525681.43	410155.11	1989		54112	Urbis	Axia 16 LED 350mA	19 Watts	6.00 Metres	Galvanised Steel	
Y	19	STREET LIGHTING	NEWHAVEN TERRACE	GRIMSBY	525667.76	410161.05	1989		54113	Urbis	Axia 16 LED 350mA	19 Watts	6.00 Metres	Galvanised Steel	
Y	20	STREET LIGHTING	NEWHAVEN TERRACE	GRIMSBY	525647.26	410170.11	1989		54114	Urbis	Axia 16 LED 350mA	19 Watts	6.00 Metres	Galvanised Steel	
Y	21	STREET LIGHTING	NEWHAVEN TERRACE	GRIMSBY	525630.93	410177.89	1989		54115	Urbis	Axia 16 LED 350mA	19 Watts	6.00 Metres	Galvanised Steel	
Y	22	STREET LIGHTING	NEWHAVEN TERRACE	GRIMSBY	525605.11	410189.72	1989		54116	Urbis	Axia 16 LED 350mA	19 Watts	6.00 Metres	Galvanised Steel	
Y	23	STREET LIGHTING	NEWHAVEN TERRACE	GRIMSBY	525577.38	410202.95	1989		54117	Urbis	Axia 16 LED 350mA	19 Watts	6.00 Metres	Galvanised Steel	
Y	24	STREET LIGHTING	NEWHAVEN TERRACE	GRIMSBY	525553.46	410214.41	1989		54118	Urbis	Axia 16 LED 350mA	19 Watts	6.00 Metres	Galvanised Steel	
Y	25	STREET LIGHTING	NEWHAVEN TERRACE	GRIMSBY	525534.85	410228.39	1989		54119	Urbis	Axia 16 LED 350mA	19 Watts	6.00 Metres	Galvanised Steel	
Y	26	STREET LIGHTING	NEWHAVEN TERRACE	GRIMSBY	525520.93	410239.47	1989		54120	Urbis	Axia 16 LED 350mA	19 Watts	6.00 Metres	Galvanised Steel	
Y	27	STREET LIGHTING	NEWHAVEN TERRACE	GRIMSBY	525501.69	410254.97	1989		54121	Urbis	Axia 16 LED 350mA	19 Watts	6.00 Metres	Galvanised Steel	
Y	28	STREET LIGHTING	NEWHAVEN TERRACE	GRIMSBY	525489.92	410264.59	1989		54122	Urbis	Axia 16 LED 350mA	19 Watts	6.00 Metres	Galvanised Steel	
Y	29	STREET LIGHTING	NEWHAVEN TERRACE	GRIMSBY	525476.63	410275.16	1989		54123	Urbis	Axia 16 LED 350mA	19 Watts	6.00 Metres	Galvanised Steel	
Y	30	STREET LIGHTING	NEWHAVEN TERRACE	GRIMSBY	525460.55	410288.07	1989		54124	Urbis	Axia 16 LED 350mA	19 Watts	6.00 Metres	Galvanised Steel	
Y	1	STREET LIGHTING	OLIVER COURT	GRIMSBY	526509.7	409868.94	2020	21/08/2020	67977	Urbis	Axia 24 LED 540mA	26 Watts	6.00 Metres	Galvanised Steel	
Y	2	STREET LIGHTING	OLIVER COURT	GRIMSBY	526520.85	409848.29	2020	21/08/2020	68255	Urbis	Axia 24 LED 540mA	26 Watts	6.00 Metres	Galvanised Steel	
Y	3	STREET LIGHTING	OLIVER COURT	GRIMSBY	526522.69	409813.37			68312	Urbis	Teceo 32 LED 500mA	52 Watts	6.00 Metres	Steel	
Y	1	STREET LIGHTING	PYEWIPE ROAD	GRIMSBY	526055.38	410085.8	2007		55702	1 Urbis LED	Teceo 48 LED 700mA	104 Watts	12.00 Metres	Steel	
Y	2	STREET LIGHTING	PYEWIPE ROAD	GRIMSBY	526062.02	410117.42	2007		55703	1 Urbis LED	Teceo 48 LED 700mA	104 Watts	12.00 Metres	Steel	
Y	3	STREET LIGHTING	PYEWIPE ROAD	GRIMSBY	526069.29	410150.65	2007		55704	1 Urbis LED	Teceo 48 LED 700mA	104 Watts	12.00 Metres	Steel	
Y	4	STREET LIGHTING	PYEWIPE ROAD	GRIMSBY	526075.11	410180.34	2007		55705	1 Urbis LED	Teceo 48 LED 700mA	104 Watts	12.00 Metres	Steel	
Y	5	STREET LIGHTING	PYEWIPE ROAD	GRIMSBY	526082.05	410211.43	2007		55706	1 Urbis LED	Teceo 48 LED 700mA	104 Watts	12.00 Metres	Steel	
Y	6	STREET LIGHTING	PYEWIPE ROAD	GRIMSBY	526089.52	410246.07	2007		55707	1 Urbis LED	Teceo 48 LED 700mA	104 Watts	12.00 Metres	Steel	
Y	7	STREET LIGHTING	PYEWIPE ROAD	GRIMSBY	526096.76	410279.97	2007		55708	Urbis	Teceo 48 LED 700mA	104 Watts	12.00 Metres	Steel	
Y	8	STREET LIGHTING	PYEWIPE ROAD	GRIMSBY	526103.03	410309.23	2007		55709	1 Urbis LED	Teceo 48 LED 700mA	104 Watts	12.00 Metres	Steel	
Y	9	STREET LIGHTING	PYEWIPE ROAD	GRIMSBY	526123.63	410337.53	2007		55710	1 Urbis LED	Teceo 48 LED 700mA	104 Watts	12.00 Metres	Steel	
Y	1	STREET LIGHTING	ALEXANDRA ROAD ACCESS ROAD TO	GRIMSBY	526786.57	409652.79	1987		42980	1 Urbis LED	Axia 16 LED 500mA	28 Watts	6.00 Metres	Galvanised Steel	
Y	2	STREET LIGHTING	ALEXANDRA ROAD ACCESS ROAD TO	GRIMSBY	526802.65	409638.48	1987		42981	1 Urbis LED	Axia 16 LED 500mA	28 Watts	6.00 Metres	Galvanised Steel	
Y	3	STREET LIGHTING	ALEXANDRA ROAD ACCESS ROAD TO	GRIMSBY	526807.71	409670.89	1987		42982	1 Urbis LED	Axia 16 LED 500mA	28 Watts	6.00 Metres	Galvanised Steel	
Y	4	STREET LIGHTING	ALEXANDRA ROAD ACCESS ROAD TO	GRIMSBY	526813.15	409700.25	1987		42983	1 Urbis LED	Axia 16 LED 500mA	28 Watts	6.00 Metres	Galvanised Steel	
Y	5	STREET LIGHTING	ALEXANDRA ROAD ACCESS ROAD TO	GRIMSBY	526819.48	409733.41	1987		42984	1 Urbis LED	Axia 16 LED 500mA	28 Watts	6.00 Metres	Galvanised Steel	
Y	6	STREET LIGHTING	ALEXANDRA ROAD ACCESS ROAD TO	GRIMSBY	526825.81	409766.89	1987		42985	1 Urbis LED	Axia 16 LED 500mA	28 Watts	6.00 Metres	Galvanised Steel	
Y	7	STREET LIGHTING	ALEXANDRA ROAD ACCESS ROAD TO	GRIMSBY	526813.65	409793.04	1987		42986	1 Urbis LED	Axia 16 LED 500mA	28 Watts	6.00 Metres	Galvanised Steel	
Y	8	STREET LIGHTING	ALEXANDRA ROAD ACCESS ROAD TO	GRIMSBY	526831.88	409798.79	1987		42987	1 Urbis LED	Axia 16 LED 500mA	28 Watts	6.00 Metres	Galvanised Steel	
Y	9	STREET LIGHTING	ALEXANDRA ROAD ACCESS ROAD TO	GRIMSBY	526838.21	409832.4	1987		42988	1 Urbis LED	Axia 16 LED 500mA	28 Watts	6.00 Metres	Galvanised Steel	
Y	10	STREET LIGHTING	ALEXANDRA ROAD ACCESS ROAD TO	GRIMSBY	526844.54	409866.06	1987		42989	1 Urbis LED	Axia 16 LED 500mA	28 Watts	6.00 Metres	Galvanised Steel	
Y	11	STREET LIGHTING	ALEXANDRA ROAD ACCESS ROAD TO	GRIMSBY	526850.74	409899.61	1987		42990	1 Urbis LED	Axia 16 LED 500mA	28 Watts	6.00 Metres	Galvanised Steel	
Y	1	STREET LIGHTING	RAVENSPURN WAY	GRIMSBY	526566.37	409941.29	1968		55933	1 Urbis LED	Axia 16 LED 500mA	28 Watts	6.00 Metres	Steel	
Y	2	STREET LIGHTING	RAVENSPURN WAY	GRIMSBY	526568.64	409901.58	2013	17/09/2013	68517	Urbis	Axia 16 LED 500mA	28 Watts	6.00 Metres	Steel	
Y	3	STREET LIGHTING	RAVENSPURN WAY	GRIMSBY	526564.86	409865.4	2013		55935	1 Urbis LED	Axia 16 LED 500mA	28 Watts	6.00 Metres	Steel	
Y	4	STREET LIGHTING	RAVENSPURN WAY	GRIMSBY	526563.97	409830.98	1968		55936	1 Urbis LED	Axia 16 LED 500mA	28 Watts	6.00 Metres	Steel	
Y	5	STREET LIGHTING	RAVENSPURN WAY	GRIMSBY	526562.58	409778.12	2013		55937	1 Urbis LED	Axia 16 LED 500mA	28 Watts	6.00 Metres	Galvanised Steel	
Y	1	STREET LIGHTING	RENDEL STREET	GRIMSBY	526788.19	409974.57	2007		55997	1 Urbis LED	Teceo 48 LED 500mA	79 Watts	10.00 Metres	Galvanised Steel	
Y	2	STREET LIGHTING	RENDEL STREET	GRIMSBY	526779.7	409971.24	2007		55998	1 Urbis LED	Teceo 48 LED 500mA	79 Watts	10.00 Metres	Stainless Steel	
Y	3	STREET LIGHTING	RENDEL STREET	GRIMSBY	526792.98	409997.58	1965		55999	1 Urbis LED	Teceo 48 LED 500mA	79 Watts	10.00 Metres	Galvanised Steel	
Y	4	STREET LIGHTING	RENDEL STREET	GRIMSBY	526773.65	410015.9	1965		56000	1 Urbis LED	Teceo 48 LED 500mA	79 Watts	8.00 Metres	Steel	
Y	5	STREET LIGHTING	RENDEL STREET	GRIMSBY	526786.19	410052.46	2008		56001	1 Urbis LED	Teceo 48 LED 500mA	79 Watts	8.00 Metres	Steel	
Y	7	STREET LIGHTING	RENDEL STREET	GRIMSBY	526786.9	410092.03	2018	23/05/2018	56003	Urbis	Teceo 48 LED 500mA	79 Watts	6.00 Metres	Galvanised Steel	
Y	8	STREET LIGHTING	RENDEL STREET	GRIMSBY	526773.83	410123.61	2018	23/05/2018	56004	Urbis	Teceo 48 LED 500mA	79 Watts	6.00 Metres	Galvanised Steel	
Y	9	STREET LIGHTING	RENDEL STREET	GRIMSBY	526788.56	410166.97	1965		56005	1 Urbis LED	Teceo 48 LED 500mA	79 Watts	8.00 Metres	Steel	
Y	10	STREET LIGHTING	RENDEL STREET	GRIMSBY	526776.04	410210.06	2018	23/05/2018	56006	Urbis	Teceo 48 LED 500mA	79 Watts	6.00 Metres	Galvanised Steel	
Y	11	STREET LIGHTING	RENDEL STREET	GRIMSBY	526776.93	410248.71	2008		56007	1 Urbis LED	Teceo 48 LED 500mA	79 Watts	8.00 Metres	Steel	
Y	1	STREET LIGHTING	WATKIN STREET SOUTH	GRIMSBY	526576.09	410092.26	1998		59906	1 Urbis LED	Teceo 32 LED 500mA	52 Watts	8.00 Metres	Galvanised Steel	
Y	2	STREET LIGHTING	WATKIN STREET SOUTH	GRIMSBY	526560.07	410058.48	1998		59907	1 Urbis LED	Teceo 32 LED 500mA	52 Watts	8.00 Metres	Galvanised Steel	
Y	3	STREET LIGHTING	WATKIN STREET SOUTH	GRIMSBY	526578.67	410028.93	1998		59908	1 Urbis LED	Teceo 32 LED 500mA	52 Watts	8.00 Metres	Galvanised Steel	
Y	4	STREET LIGHTING	WATKIN STREET SOUTH	GRIMSBY	526549.94	410029.66	1998		59909	1 Urbis LED	Teceo 32 LED 500mA	52 Watts	8.00 Metres	Galvanised Steel	
Y	1	STREET LIGHTING	SANDFORD STREET	GRIMSBY	526002.95	410066.54	1994		56559	1 Urbis LED	Axia 16 LED 500mA	28 Watts	6.00 Metres	Galvanised Steel	
Y	2	STREET LIGHTING	SANDFORD STREET	GRIMSBY	525983.33	410045.97	1994		56560	1 Urbis LED	Axia 16 LED 500mA	28 Watts	6.00 Metres	Galvanised Steel	
Y	3	STREET LIGHTING	SANDFORD STREET	GRIMSBY	525972.69	410022.11	1994		56561	1 Urbis LED	Axia 16 LED 500mA	28 Watts	6.00 Metres	Galvanised Steel	
Y	1	STREET LIGHTING	SOMERSBY STREET	GRIMSBY	526718.72	409514.92	1998		57300	1 Urbis LED	Axia 16 LED 500mA	28 Watts	6.00 Metres	Galvanised Steel	
Y	2	STREET LIGHTING	SOMERSBY STREET	GRIMSBY	526699.23	409529.04	1998		57301	1 Urbis LED	Axia 16 LED 500mA	28 Watts	6.00 Metres	Galvanised Steel	
Y	3	STREET LIGHTING	SOMERSBY STREET	GRIMSBY	526669.11	409520.68	1998		57302	1 Urbis LED	Axia 16 LED 500mA	28 Watts	6.00 Metres	Galvanised Steel	
Y	4	STREET LIGHTING	SOMERSBY STREET	GRIMSBY	526646.07	409535.43	1998		57303	1 Urbis LED	Axia 16 LED 500mA	28 Watts	6.00 Metres	Galvanised Steel	
Y	1	STREET LIGHTING	SOUTH PARADE	GRIMSBY	526752.77	409644.37	1986		57379	1 Urbis LED	Teceo 24 LED 500mA	40 Watts	6.00 Metres	Galvanised Steel	
Y	2	STREET LIGHTING	SOUTH PARADE	GRIMSBY	526733.91	409645.01	1986		57380	1 Urbis LED	Teceo 24 LED 500mA	40 Watts	6.00 Metres	Galvanised Steel	
Y	3	STREET LIGHTING	SOUTH PARADE	GRIMSBY	526700.75	409645.77	1986		57381	1 Urbis LED	Teceo 24 LED 500mA	40 Watts	6.00 Metres	Galvanised Steel	
Y	1	STREET LIGHTING	STORTFORD STREET	GRIMSBY	525857.16	410272	1975		58501	1 Urbis LED	Teceo 24 LED 500mA	40 Watts	6.00 Metres	Galvanised Steel	
Y	2	STREET LIGHTING	STORTFORD STREET	GRIMSBY	525860	410238.06	1975		58502	1 Urbis LED	Teceo 24 LED 500mA	40 Watts	6.00 Metres	Galvanised Steel	
Y	3	STREET LIGHTING	STORTFORD STREET	GRIMSBY	525846.84	410205.53	1975		58503	1 Urbis LED	Teceo 24 LED 500mA	40 Watts	6.00 Metres	Galvanised Steel	
Y	4	STREET LIGHTING	STORTFORD STREET	GRIMSBY	525823.42	410177.43	1975		58504	1 Urbis LED	Teceo 24 LED 500mA	40 Watts	6.00 Metres	Galvanised Steel	
Y	5	STREET LIGHTING	STORTFORD STREET	GRIMSBY	525821.78	410144.45	1975		58505	1 Urbis LED	Teceo 24 LED 500mA	40 Watts	6.00 Metres	Galvanised Steel	
Y	6	STREET LIGHTING	STORTFORD STREET	GRIMSBY	525792.92	410108.38	1975		58506	1 Urbis LED	Teceo 24 LED 500mA	40 Watts	6.00 Metres	Galvanised Steel	
Y	1	STREET LIGHTING	TENNYSON STREET	GRIMSBY	526792.58	409847.05	1988		58850	1 Urbis LED	Axia 16 LED 500mA	28 Watts	6.00 Metres	Galvanised Steel	
Y	2	STREET LIGHTING	TENNYSON STREET	GRIMSBY	526760.42	409852.87	1988		58851	1 Urbis LED	Axia 16 LED 500mA	28 Watts	6.00 Metres	Galvanised Steel	
Y	3	STREET LIGHTING	TENNYSON STREET	GRIMSBY	526729.41	409869.64	1988		58852	1 Urbis LED	Axia 16 LED 500mA	28 Watts	6.00 Metres	Galvanised Steel	
Y	4	STREET LIGHTING	TENNYSON STREET	GRIMSBY	526693.85	409864.9	1988		58853	1 Urbis LED	Axia 16 LED 500mA	28 Watts	6.00 Metres	Galvanised Steel	
Y	5	STREET LIGHTING	TENNYSON STREET	GRIMSBY	526692.2	409841.42	1988		58854	1 Urbis LED	Axia 16 LED 500mA	28 Watts	5.00 Metres	Galvanised Steel	
Y	6	STREET LIGHTING	TENNYSON STREET	GRIMSBY	526671.69	409844.14	1988		58855	1 Urbis LED	Axia 16 LED 500mA	28 Watts	5.00 Metres	Galvanised Steel	
Y	7	STREET LIGHTING	TENNYSON STREET	GRIMSBY	526710.18	409882.43	1988		58856	Urbis	Axia 8 LED 350mA	10 Watts	5.00 Metres	Galvanised Steel	

Y	1	STREET LIGHTING	WATKIN STREET NORTH	GRIMSBY	526579.17	410252.17	2018	30/05/2018	68522	Urbis	Teceo 32 LED 500mA	52 Watts	8.00 Metres	Galvanised Steel	
Y	2	STREET LIGHTING	WATKIN STREET NORTH	GRIMSBY	526564.68	410222.99	2018	30/05/2018	68523	Urbis	Teceo 32 LED 500mA	52 Watts	8.00 Metres	Galvanised Steel	
Y	3	STREET LIGHTING	WATKIN STREET NORTH	GRIMSBY	526578.22	410192.39	2008		59902	1 Urbis LED	Teceo 32 LED 500mA	52 Watts	8.00 Metres	Steel	
Y	4	STREET LIGHTING	WATKIN STREET NORTH	GRIMSBY	526558.13	410174.15	2018	30/05/2018	68524	Urbis	Teceo 32 LED 500mA	52 Watts	8.00 Metres	Galvanised Steel	
Y	5	STREET LIGHTING	WATKIN STREET NORTH	GRIMSBY	526532.01	410173.09	2008		59904	1 Urbis LED	Teceo 32 LED 500mA	52 Watts	8.00 Metres	Steel	
Y	1	STREET LIGHTING	WHERNSIDE WALK	GRIMSBY	526684.06	409810.16	1993		60636	Urbis	Axia 8 LED 350mA	10 Watts	5.00 Metres	Steel	
Y	2	STREET LIGHTING	WHERNSIDE WALK	GRIMSBY	526670.13	409788.07	2013		60637	Urbis	Axia 8 LED 350mA	10 Watts	6.00 Metres	Galvanised Steel	
Y	1	STREET LIGHTING	YARBOROUGH DRIVE	GRIMSBY	526506.61	409762.75	1946		61330	1 Urbis LED	Teceo 32 LED 500mA	52 Watts	8.00 Metres	Steel	
Y	2	STREET LIGHTING	YARBOROUGH DRIVE	GRIMSBY	526544.96	409772.18	2004		61331	1 Urbis LED	Teceo 32 LED 500mA	52 Watts	8.00 Metres	Stainless Steel	
Y	3	STREET LIGHTING	YARBOROUGH DRIVE	GRIMSBY	526566.35	409745.22	2004		61332	1 Urbis LED	Teceo 32 LED 500mA	52 Watts	8.00 Metres	Stainless Steel	
Y	4	STREET LIGHTING	YARBOROUGH DRIVE	GRIMSBY	526565.72	409710.85	2004		61333	1 Urbis LED	Teceo 32 LED 500mA	52 Watts	8.00 Metres	Stainless Steel	
Y	5	STREET LIGHTING	YARBOROUGH DRIVE	GRIMSBY	526566	409677	2001		61334	1 Urbis LED	Teceo 32 LED 500mA	52 Watts	8.00 Metres	Galvanised Steel	
Y	1	STREET LIGHTING	YORK STREET	GRIMSBY	526404.77	409838.83	1992		61421	Urbis	Axia 16 LED 350mA	19 Watts	6.00 Metres	Galvanised Steel	
Y	2	STREET LIGHTING	YORK STREET	GRIMSBY	526383.37	409850.61	1992		61422	Urbis	Axia 16 LED 350mA	19 Watts	6.00 Metres	Galvanised Steel	
Y	3	STREET LIGHTING	YORK STREET	GRIMSBY	526360.59	409850.67	1992		61423	Urbis	Axia 16 LED 350mA	19 Watts	6.00 Metres	Galvanised Steel	
Y	1	STREET LIGHTING	BIRCHIN WAY	GRIMSBY	526080.12	410373.65	1994		44156	1 Urbis LED	Teceo 32 LED 500mA	52 Watts	12.00 Metres	Galvanised Steel	
Y	2	STREET LIGHTING	BIRCHIN WAY	GRIMSBY	526044.22	410381.47	1994		44157	1 Urbis LED	Teceo 32 LED 500mA	52 Watts	10.00 Metres	Galvanised Steel	
Y	3	STREET LIGHTING	BIRCHIN WAY	GRIMSBY	526013.11	410395.74	1994		44158	1 Urbis LED	Teceo 32 LED 500mA	52 Watts	10.00 Metres	Galvanised Steel	
Y	4	STREET LIGHTING	BIRCHIN WAY	GRIMSBY	525998.56	410423.08	1994		44159	1 Urbis LED	Teceo 32 LED 500mA	52 Watts	10.00 Metres	Galvanised Steel	
Y	5	STREET LIGHTING	BIRCHIN WAY	GRIMSBY	525962.47	410449.87	1994		44160	1 Urbis LED	Teceo 32 LED 500mA	52 Watts	10.00 Metres	Galvanised Steel	
Y	6	STREET LIGHTING	BIRCHIN WAY	GRIMSBY	525935.96	410469.11	1994		44161	1 Urbis LED	Teceo 32 LED 500mA	52 Watts	10.00 Metres	Galvanised Steel	
Y	7	STREET LIGHTING	BIRCHIN WAY	GRIMSBY	525908.34	410480.62	1994		44162	1 Urbis LED	Teceo 32 LED 500mA	52 Watts	10.00 Metres	Galvanised Steel	
Y	8	STREET LIGHTING	BIRCHIN WAY	GRIMSBY	525862.68	410490.75	1994		44163	1 Urbis LED	Teceo 32 LED 500mA	52 Watts	10.00 Metres	Galvanised Steel	
Y	9	STREET LIGHTING	BIRCHIN WAY	GRIMSBY	525823.72	410498.96	2019	03/10/2019	67658	Urbis	Teceo 32 LED 500mA	52 Watts	12.00 Metres	Galvanised Steel	
Y	10	STREET LIGHTING	BIRCHIN WAY	GRIMSBY	525790.87	410505.85	1994		44165	1 Urbis LED	Teceo 32 LED 500mA	52 Watts	10.00 Metres	Galvanised Steel	
Y	1	STREET LIGHTING	RAVENSPURN STREET	GRIMSBY	526481.17	409987.13	2015	30/07/2015	55932	1 Urbis LED	Axia 16 LED 500mA	28 Watts	6.00 Metres	Galvanised Steel	
Y	1	STREET LIGHTING	HAVEN GARDENS	GRIMSBY	525445.74	410299.76	1989		50319	Urbis	Axia 16 LED 350mA	19 Watts	5.00 Metres	Galvanised Steel	
Y	2	STREET LIGHTING	HAVEN GARDENS	GRIMSBY	525422.83	410310.97	1989		50320	Urbis	Axia 16 LED 350mA	19 Watts	5.00 Metres	Galvanised Steel	
Y	3	STREET LIGHTING	HAVEN GARDENS	GRIMSBY	525419.03	410325.34	2019	09/10/2019	67518	Urbis	Axia 16 LED 350mA	19 Watts	6.00 Metres	Galvanised Steel	
Y	4	STREET LIGHTING	HAVEN GARDENS	GRIMSBY	525402.96	410341.85	1989		50322	Urbis	Axia 16 LED 350mA	19 Watts	5.00 Metres	Galvanised Steel	
Y	5	STREET LIGHTING	HAVEN GARDENS	GRIMSBY	525379.92	410351.28	1989		50323	Urbis	Axia 16 LED 350mA	19 Watts	5.00 Metres	Galvanised Steel	
Y	6	STREET LIGHTING	HAVEN GARDENS	GRIMSBY	525410.55	410357.04	1989		50324	Urbis	Axia 16 LED 350mA	19 Watts	5.00 Metres	Galvanised Steel	
Y	7	STREET LIGHTING	HAVEN GARDENS	GRIMSBY	525414.6	410381.79	1989		50325	Urbis	Axia 16 LED 350mA	19 Watts	5.00 Metres	Galvanised Steel	
Y	8	STREET LIGHTING	HAVEN GARDENS	GRIMSBY	525441.69	410399.57	1989		50326	Urbis	Axia 16 LED 350mA	19 Watts	5.00 Metres	Galvanised Steel	
Y	9	STREET LIGHTING	HAVEN GARDENS	GRIMSBY	525432.07	410336.17	1989		50327	Urbis	Axia 16 LED 350mA	19 Watts	5.00 Metres	Galvanised Steel	
Y	10	STREET LIGHTING	HAVEN GARDENS	GRIMSBY	525456.12	410359.53	1989		50328	Urbis	Axia 16 LED 350mA	19 Watts	5.00 Metres	Galvanised Steel	
Y	1	STREET LIGHTING	WEST COATES ROAD ROUNDABOUT	GRIMSBY	526018.65	410581.2	2007		60301	1 Urbis LED	Teceo 24 LED 500mA	40 Watts	8.00 Metres	Galvanised Steel	
Y	2	STREET LIGHTING	WEST COATES ROAD ROUNDABOUT	GRIMSBY	525998.04	410587.9	2002		60302	1 Urbis LED	Teceo 24 LED 500mA	40 Watts	8.00 Metres	Stainless Steel	
Y	3	STREET LIGHTING	WEST COATES ROAD ROUNDABOUT	GRIMSBY	526000.89	410604.73	2002		60303	1 Urbis LED	Teceo 24 LED 500mA	40 Watts	8.00 Metres	Stainless Steel	
Y	4	STREET LIGHTING	WEST COATES ROAD ROUNDABOUT	GRIMSBY	526028.41	410600.84	2002		60304	1 Urbis LED	Teceo 24 LED 500mA	40 Watts	8.00 Metres	Stainless Steel	
Y	1	STREET LIGHTING	FOOTPATH BETWEEN WATERSIDE	GRIMSBY	526482.99	409662.44	1988		48790	Urbis	Axia 8 LED 350mA	10 Watts	5.00 Metres	Galvanised Steel	
Y	2	STREET LIGHTING	FOOTPATH BETWEEN WATERSIDE	GRIMSBY	526469.2	409657.82	1988		48791	Urbis	Axia 8 LED 350mA	10 Watts	5.00 Metres	Galvanised Steel	
Y	1	STREET LIGHTING	WATERSIDE DRIVE	GRIMSBY	526545.9	409647.18	1988		59863	Urbis	Axia 16 LED 350mA	19 Watts	6.00 Metres	Galvanised Steel	
Y	2	STREET LIGHTING	WATERSIDE DRIVE	GRIMSBY	526528.94	409629.65	1988		59864	Urbis	Axia 16 LED 350mA	19 Watts	6.00 Metres	Galvanised Steel	
Y	3	STREET LIGHTING	WATERSIDE DRIVE	GRIMSBY	526518.69	409649.33	1988		59865	Urbis	Axia 16 LED 350mA	19 Watts	6.00 Metres	Galvanised Steel	
Y	4	STREET LIGHTING	WATERSIDE DRIVE	GRIMSBY	526499.7	409664.08	1988		59866	Urbis	Axia 16 LED 350mA	19 Watts	6.00 Metres	Galvanised Steel	
Y	5	STREET LIGHTING	WATERSIDE DRIVE	GRIMSBY	526518.94	409681.55	1988		59867	Urbis	Axia 16 LED 350mA	19 Watts	6.00 Metres	Galvanised Steel	
Y	6	STREET LIGHTING	WATERSIDE DRIVE	GRIMSBY	526532.38	409694.2	2021	12/10/2021	68742	Urbis	Axia 8 LED 350mA	10 Watts	6.00 Metres	Galvanised Steel	
Y	7	STREET LIGHTING	WATERSIDE DRIVE	GRIMSBY	526519.32	409700.35	1988		59869	Urbis	Axia 16 LED 350mA	19 Watts	6.00 Metres	Galvanised Steel	
Y	8	STREET LIGHTING	WATERSIDE DRIVE	GRIMSBY	526508.31	409700.22	1988		59870	Urbis	Axia 16 LED 350mA	19 Watts	6.00 Metres	Galvanised Steel	
Y	9	STREET LIGHTING	WATERSIDE DRIVE	GRIMSBY	526524.26	409718.77	1988		59871	Urbis	Axia 16 LED 350mA	19 Watts	6.00 Metres	Galvanised Steel	
Y	10	STREET LIGHTING	WATERSIDE DRIVE	GRIMSBY	526543.37	409717.94	1988		59872	Urbis	Axia 16 LED 350mA	19 Watts	6.00 Metres	Galvanised Steel	
Y	11	STREET LIGHTING	WATERSIDE DRIVE	GRIMSBY	526499.58	409726.36	1988		59873	Urbis	Axia 16 LED 350mA	19 Watts	6.00 Metres	Galvanised Steel	
Y	12	STREET LIGHTING	WATERSIDE DRIVE	GRIMSBY	526524.77	409738.89	1988		59874	Urbis	Axia 16 LED 350mA	19 Watts	6.00 Metres	Galvanised Steel	
Y	13	STREET LIGHTING	WATERSIDE DRIVE	GRIMSBY	526544.01	409738.51	1988		59875	Urbis	Axia 16 LED 350mA	19 Watts	6.00 Metres	Galvanised Steel	
Y	1	STREET LIGHTING	CORPORATION ROAD	GRIMSBY	526985.88	409944.7	1988		46733	1 Urbis LED	Teceo 48 LED 700mA	104 Watts	10.00 Metres	Galvanised Steel	
Y	2	STREET LIGHTING	CORPORATION ROAD	GRIMSBY	526951.04	409945.81	1988		46734	1 Urbis LED	Teceo 48 LED 700mA	104 Watts	10.00 Metres	Galvanised Steel	
Y	3	STREET LIGHTING	CORPORATION ROAD	GRIMSBY	526897.57	409946.94	1988		46735	1 Urbis LED	Teceo 48 LED 700mA	104 Watts	10.00 Metres	Galvanised Steel	
Y	4	STREET LIGHTING	CORPORATION ROAD	GRIMSBY	526866.77	409961.97	1988		46736	1 Urbis LED	Teceo 48 LED 700mA	104 Watts	10.00 Metres	Galvanised Steel	
Y	5	STREET LIGHTING	CORPORATION ROAD	GRIMSBY	526838.87	409949.86	1988		46737	1 Urbis LED	Teceo 48 LED 700mA	104 Watts	10.00 Metres	Galvanised Steel	
Y	6	STREET LIGHTING	CORPORATION ROAD	GRIMSBY	526793.3	409949.79	1988		46738	1 Urbis LED	Teceo 48 LED 700mA	104 Watts	12.00 Metres	Galvanised Steel	
Y	7	STREET LIGHTING	CORPORATION ROAD	GRIMSBY	526770.47	409965.35	2021	29/03/2021	68418	Urbis	Teceo 48 LED 700mA	104 Watts	12.00 Metres	Galvanised Steel	
Y	8	STREET LIGHTING	CORPORATION ROAD	GRIMSBY	526734.06	409949.34	1988		46740	1 Urbis LED	Teceo 48 LED 700mA	104 Watts	10.00 Metres	Galvanised Steel	
Y	9	STREET LIGHTING	CORPORATION ROAD	GRIMSBY	526723.1	409949.75	1988		46741	Urbis	Axia 16 LED 350mA	19 Watts	5.00 Metres	Steel	
Y	10	STREET LIGHTING	CORPORATION ROAD	GRIMSBY	526710.32	409966.46	1988		46742	1 Urbis LED	Teceo 48 LED 700mA	104 Watts	10.00 Metres	Galvanised Steel	
Y	11	STREET LIGHTING	CORPORATION ROAD	GRIMSBY	526687.4	409946.14	1988		46743	Urbis	Axia 16 LED 350mA	19 Watts	5.00 Metres	Steel	
Y	12	STREET LIGHTING	CORPORATION ROAD	GRIMSBY	526679.81	409952.73	1988		46744	1 Urbis LED	Teceo 48 LED 700mA	104 Watts	10.00 Metres	Galvanised Steel	
Y	13	STREET LIGHTING	CORPORATION ROAD	GRIMSBY	526651.58	409946.33	1988		46745	Urbis	Axia 16 LED 350mA	19 Watts	5.00 Metres	Steel	
Y	14	STREET LIGHTING	CORPORATION ROAD	GRIMSBY	526645.13	409967.66	1988		46746	1 Urbis LED	Teceo 48 LED 700mA	104 Watts	10.00 Metres	Galvanised Steel	
Y	15	STREET LIGHTING	CORPORATION ROAD	GRIMSBY	526609.38	409950.38	1988		46747	Urbis	Axia 16 LED 350mA	19 Watts	5.00 Metres	Steel	
Y	16	STREET LIGHTING	CORPORATION ROAD	GRIMSBY	526609.51	409954.17	1988		46748	1 Urbis LED	Teceo 48 LED 700mA	104 Watts	10.00 Metres	Galvanised Steel	
Y	17	STREET LIGHTING	CORPORATION ROAD	GRIMSBY	526585.46	409952.78	1988		46749	Urbis	Axia 16 LED 350mA	19 Watts	5.00 Metres	Steel	
Y	18	STREET LIGHTING	CORPORATION ROAD	GRIMSBY	526570.65	409969.3	1988		46750	1 Urbis LED	Teceo 48 LED 700mA	104 Watts	10.00 Metres	Galvanised Steel	
Y	19	STREET LIGHTING	CORPORATION ROAD	GRIMSBY	526539.23	409955.13	2007		46751	1 Urbis LED	Teceo 48 LED 700mA	104 Watts	10.00 Metres	Galvanised Steel	
Y	20	STREET LIGHTING	CORPORATION ROAD	GRIMSBY	526503.92	409970.63	1988		46752	1 Urbis LED	Teceo 48 LED 700mA	104 Watts	10.00 Metres	Galvanised Steel	
Y	21	STREET LIGHTING	CORPORATION ROAD	GRIMSBY	526466.58	409959.49	2006		46753	1 Urbis LED	Teceo 48 LED 700mA	104 Watts	10.00 Metres	Stainless Steel	
Y	22	STREET LIGHTING	CORPORATION ROAD	GRIMSBY	526441.04	409970.54	1988		46754	1 Urbis LED	Teceo 48 LED 700mA	104 Watts	10.00 Metres	Galvanised Steel	
Y	23	STREET LIGHTING	CORPORATION ROAD	GRIMSBY	526400.91	409960.92	1988		46755	1 Urbis LED	Teceo 48 LED 700mA	104 Watts	10.00 Metres	Galvanised Steel	
Y	24	STREET LIGHTING	CORPORATION ROAD	GRIMSBY	526368.25	409972.06	1988		46756	1 Urbis LED	Teceo 48 LED 700mA	104 Watts	10.00 Metres	Galvanised Steel	
Y	25	STREET LIGHTING	CORPORATION ROAD	GRIMSBY	526334.46	409962.63	1988		46757	1 Urbis LED	Teceo 48 LED 700mA	104 Watts	10.00 Metres	Galvanised Steel	
Y	26	STREET LIGHTING	CORPORATION ROAD	GRIMSBY	526299.27	409965.48	1988		46758	1 Urbis LED	Teceo 48 LED 700mA	104 Watts	10.00 Metres	Galvanised Steel	
Y	27	STREET LIGHTING	CORPORATION ROAD	GRIMSBY	526270.54	409972.44	1988		46759	1 Urbis LED	Teceo 48 LED 700mA	104 Watts	10.00 Metres	Galvanised Steel	
Y	28	STREET LIGHTING	CORPORATION ROAD	GRIMSBY	526246.74	409979.85	1988		46760	1 Urbis LED	Teceo 48 LED 700mA	104 Watts	10.00 Metres	Galvanised Steel	
Y	29	STREET LIGHTING	CORPORATION ROAD	GRIMSBY	526221.68	409999.47	1988		46761	1 Urbis LED	Teceo 48 LED 700mA	104 Watts	10.00 Metres	Galvanised Steel	
Y	30	STREET LIGHTING	CORPORATION ROAD	GRIMSBY	526185.33	410001.71	1988		46762	1 Urbis LED	Teceo 48 LED 700mA	104 Watts	10.00 Metres	Galvanised Steel	
Y	31	STREET LIGHTING	CORPORATION ROAD	GRIMSBY	526145.46	410014.75	1988		46763	1 Urbis LED	Teceo 48 LED 700mA	104 Watts	10.00 Metres	Galvanised Steel	
Y	32	STREET LIGHTING	CORPORATION ROAD	GRIMSBY	526123.69	410039.12	1988		46764	1 Urbis LED	Teceo 48 LED 700mA	104 Watts	10.00 Metres	Galvanised Steel	
Y	33	STREET LIGHTING	CORPORATION ROAD	GRIMSBY	526086.47	410037.35	1988		46765	1 Urbis LED	Teceo 48 LED 700mA	104 Watts	10.00 Metres	Galvanised Steel	
Y	34	STREET LIGHTING	CORPORATION ROAD	GRIMSBY	526073.31	410058.55	1988		46766	1 Urbis LED	Teceo 48 LED 700mA	104 Watts	10.00 Metres	Galvanised Steel	
Y	35	STREET LIGHTING	CORPORATION ROAD	GRIMSBY	526258.76	409945.67	2006	30/06/2006	67505						
Y	1	STREET LIGHTING	WEST COATES ROAD	GRIMSBY	526160.86	410571.47	1987		60296	1 Urbis LED	Teceo 32 LED 500mA	52 Watts	8.00 Metres	Galvanised Steel	
Y	2	STREET LIGHTING	WEST COATES ROAD	GRIMSBY	526136.53	410578.01	1987		60297	1 Urbis LED	Teceo 32 LED 500mA	52 Watts	8.00 Metres	Galvanised Steel	
Y	3	STREET LIGHTING	WEST COATES ROAD	GRIMSBY	526107.77	410578.82	1987		60298	1 Urbis LED	Teceo 32 LED 500mA	52 Watts	8.00 Metres	Galvanised Steel	
Y	4	STREET LIGHTING	WEST COATES ROAD	GRIMSBY	526078.55	410578.59	1987		60299	1 Urbis LED	Teceo 32 LED 500mA	52 Watts	8.00 Metres	Galvanised Steel	
Y	5	STREET LIGHTING	WEST COATES ROAD	GRIMSBY	526050	410582	2002		60300	1 Urbis LED	Teceo 32 LED 500mA	52 Watts	8.00 Metres	Stainless Steel	
Y	1	STREET LIGHTING	ALEXANDRA ROAD	GRIMSBY	526729.99	409491.18	1989		43032	1 Urbis LED	Teceo 40 LED 500mA	64 Watts	10.00 Metres	Galvanised Steel	
Y	2	STREET LIGHTING	ALEXANDRA ROAD	GRIMSBY	526749.73	409517.9	1993		43033	1 Urbis LED	Teceo 40 LED 500mA	64 Watts	8.00 Metres	Galvanised Steel	
Y	3	STREET LIGHTING	ALEXANDRA ROAD	GRIMSBY	526757.18	409548.91	1993		43034	Urbis	AXIA 3.2 32 LED 630 mA	62 Watts	8.00 Metres	Galvanised Steel	
Y	4	STREET LIGHTING	ALEXANDRA ROAD	GRIMSBY	526762.37	409576.19	1993		43035	1 Urbis LED	Teceo 40 LED 500mA	64 Watts	8.00 Metres	Galvanised Steel	
Y	5	STREET LIGHTING	ALEXANDRA ROAD	GRIMSBY	526755.03	409606.69	1993		43036	1 Urbis LED	Teceo 40 LED 500mA	64 Watts	8.00 Metres	Galvanised Steel	
Y	6	STREET LIGHTING	ALEXANDRA ROAD	GRIMSBY	526760.73	409634.73	1993		43037	1 Urbis LED	Teceo 40 LED 500mA	64 Watts	8.00 Metres	Galvanised Steel	
Y	7	STREET LIGHTING	ALEXANDRA ROAD	GRIMSBY	526766.22	409660.95	1993		43038	1 Urbis LED	Teceo 40 LED 500mA	64 Watts	8.00 Metres	Galvanised Steel	
Y	8	STREET LIGHTING	ALEXANDRA ROAD	GRIMSBY	526771.04	409684.43	1993		43039	1 Urbis LED	Teceo 40 LED 500mA	64 Watts	8.00 Metres	Galvanised Steel	
Y	9	STREET LIGHTING	ALEXANDRA ROAD	GRIMSBY	526788	409709.05	1993		43040	1 Urbis LED	Teceo 40 LED 500mA	64 Watts	8.00 Metres	Galvanised Steel	
Y	10	STREET LIGHTING	ALEXANDRA ROAD	GRIMSBY	526792.81	409734.43	1993		43041	1 Urbis LED	Teceo 40 LED 500mA	64 Watts	8.00 Metres	Galvanised Steel	
Y	11	STREET LIGHTING	ALEXANDRA ROAD	GRIMSBY	526786.23	409763.67	1993		43042	Urbis	AXIA 3.2 32 LED 510mA	50 Watts	8.00 Metres	Galvanised Steel	
Y	12	STREET LIGHTING	ALEXANDRA ROAD	GRIMSBY	526791.42	409790.31	1993		43043	1 Urbis LED	Teceo 40 LED 500mA	64 Watts	8.00 Metres	Galvanised Steel	
Y	13	STREET LIGHTING	ALEXANDRA ROAD	GRIMSBY	526796.48	409818.16	1993		43044	Urbis	AXIA 3.2 32 LED 510mA	50 Watts	8.00 Metres	Galvanised Steel	
Y	14	STREET LIGHTING	ALEXANDRA ROAD	GRIMSBY	526813.82	409845.76	1993		43045	1 Urbis LED	Teceo 40 LED 500mA	64 Watts	8.00 Metres	Galvanised Steel	
Y	15	STREET LIGHTING	ALEXANDRA ROAD	GRIMSBY	526818.63	409871.01	1993		43046	Urbis	AXIA 3.2 32 LED 510mA	50 Watts	8.00 Metres	Galvanised Steel	

Y	16	STREET LIGHTING	ALEXANDRA ROAD	GRIMSBY	526811.29	409894.37	1993		43047	Urbis	AXIA 3.2 32 LED 510mA	50 Watts	8.00 Metres	Galvanised Steel	
Y	17	STREET LIGHTING	ALEXANDRA ROAD	GRIMSBY	526825.21	409917.72	1993		43048	1 Urbis LED	Teceo 40 LED 500mA	64 Watts	8.00 Metres	Galvanised Steel	
Y	18	STREET LIGHTING	ALEXANDRA ROAD	GRIMSBY	526807.72	409928.3	1993		43049	1 Urbis LED	Teceo 40 LED 500mA	64 Watts	8.00 Metres	Galvanised Steel	
Y	19	STREET LIGHTING	ALEXANDRA ROAD	GRIMSBY	526815.01	409948.56	1989		61446	1 Urbis LED	Teceo 40 LED 500mA	64 Watts	8.00 Metres	Galvanised Steel	
Y	19	STREET LIGHTING	ALEXANDRA ROAD	GRIMSBY	526815.01	409948.56	1989		61978	1 Urbis LED	Teceo 40 LED 500mA	64 Watts	8.00 Metres	Galvanised Steel	
Y	19	STREET LIGHTING	ALEXANDRA ROAD	GRIMSBY	526815.01	409948.56	1989		62941	1 Urbis LED	Teceo 40 LED 500mA	64 Watts	8.00 Metres	Galvanised Steel	
Y	20	STREET LIGHTING	ALEXANDRA ROAD	GRIMSBY	526833.63	409972.39	1993		43050	1 Urbis LED	Teceo 40 LED 500mA	64 Watts	6.00 Metres	Galvanised Steel	
Y	21	STREET LIGHTING	ALEXANDRA ROAD	GRIMSBY	526829.07	410001.12	1989		43051	1 Urbis LED	Teceo 40 LED 500mA	64 Watts	8.00 Metres	Galvanised Steel	
Y	22	STREET LIGHTING	ALEXANDRA ROAD	GRIMSBY	526843.39	410027.96	1989		43052	1 Urbis LED	Teceo 40 LED 500mA	64 Watts	8.00 Metres	Galvanised Steel	
Y	23	STREET LIGHTING	ALEXANDRA ROAD	GRIMSBY	526837.93	410052.64	2018	02/08/2018	43053	Urbis	Teceo 40 LED 500mA	64 Watts	8.00 Metres	Galvanised Steel	
Y	24	STREET LIGHTING	ALEXANDRA ROAD	GRIMSBY	526843.58	410085.81	2019	13/11/2019	67525	Urbis	Teceo 40 LED 500mA	64 Watts	8.00 Metres	Galvanised Steel	
Y	25	STREET LIGHTING	ALEXANDRA ROAD	GRIMSBY	526858.54	410107.13	2021	22/03/2021	68417	Urbis	Teceo 40 LED 500mA	64 Watts	8.00 Metres	Galvanised Steel	
Y	26	STREET LIGHTING	ALEXANDRA ROAD	GRIMSBY	526850.02	410123.69	1989		43056	1 Urbis LED	Teceo 40 LED 500mA	64 Watts	8.00 Metres	Galvanised Steel	
Y	27	STREET LIGHTING	ALEXANDRA ROAD	GRIMSBY	526856.83	410157.75	1989		43057	1 Urbis LED	Teceo 40 LED 500mA	64 Watts	8.00 Metres	Galvanised Steel	
Y	28	STREET LIGHTING	ALEXANDRA ROAD	GRIMSBY	526862.9	410191.91	1989		43058	1 Urbis LED	Teceo 40 LED 500mA	64 Watts	8.00 Metres	Galvanised Steel	
Y	29	STREET LIGHTING	ALEXANDRA ROAD	GRIMSBY	526868.24	410223.67	1989		43059	1 Urbis LED	Teceo 40 LED 500mA	64 Watts	8.00 Metres	Galvanised Steel	
Y	30	STREET LIGHTING	ALEXANDRA ROAD	GRIMSBY	526873.03	410248.7	1989		43060	1 Urbis LED	Teceo 40 LED 500mA	64 Watts	8.00 Metres	Galvanised Steel	
Y	1	STREET LIGHTING	BEESON GROVE	GRIMSBY	526149.6	410067.4	2008		43950	1 Urbis LED	Axia 16 LED 500mA	28 Watts	6.00 Metres	Steel	
Y	1	STREET LIGHTING	FISHERMANS WHARF	GRIMSBY	526930.62	409909	1987		48616	1 Urbis LED	Teceo 24 LED 500mA	40 Watts	6.00 Metres	Galvanised Steel	
Y	2	STREET LIGHTING	FISHERMANS WHARF	GRIMSBY	526900.01	409905.3	1987		66427	1 Urbis LED	Teceo 24 LED 500mA	40 Watts	6.00 Metres	Galvanised Steel	
Y	3	STREET LIGHTING	FISHERMANS WHARF	GRIMSBY	526864.06	409892.28	1987		66428	1 Urbis LED	Teceo 24 LED 500mA	40 Watts	6.00 Metres	Galvanised Steel	
Y	4	STREET LIGHTING	FISHERMANS WHARF	GRIMSBY	526866.28	409864.98	1987		66429	1 Urbis LED	Teceo 24 LED 500mA	40 Watts	6.00 Metres	Galvanised Steel	
Y	5	STREET LIGHTING	FISHERMANS WHARF	GRIMSBY	526858.92	409828.59	1987		66430	1 Urbis LED	Teceo 24 LED 500mA	40 Watts	6.00 Metres	Galvanised Steel	
Y	6	STREET LIGHTING	FISHERMANS WHARF	GRIMSBY	526853.51	409801.6	1987		48617	1 Urbis LED	Teceo 24 LED 500mA	40 Watts	6.00 Metres	Galvanised Steel	
Y	7	STREET LIGHTING	FISHERMANS WHARF	GRIMSBY	526846.62	409764.43	1987		48618	1 Urbis LED	Teceo 24 LED 500mA	40 Watts	6.00 Metres	Galvanised Steel	
Y	8	STREET LIGHTING	FISHERMANS WHARF	GRIMSBY	526839.94	409729.19	1987		48619	1 Urbis LED	Teceo 24 LED 500mA	40 Watts	6.00 Metres	Galvanised Steel	
Y	9	STREET LIGHTING	FISHERMANS WHARF	GRIMSBY	526824.95	409692.84	1988		48620	1 Urbis LED	Teceo 24 LED 500mA	40 Watts	6.00 Metres	Galvanised Steel	
Y	10	STREET LIGHTING	FISHERMANS WHARF	GRIMSBY	526832.83	409672.79	1996		48621	1 Urbis LED	Teceo 24 LED 500mA	40 Watts	6.00 Metres	Galvanised Steel	
Y	10	STREET LIGHTING	FISHERMANS WHARF	GRIMSBY	526832.83	409672.79	1996		62960	1 Urbis LED	Teceo 24 LED 500mA	40 Watts	6.00 Metres	Galvanised Steel	
Y	11	STREET LIGHTING	FISHERMANS WHARF	GRIMSBY	526851.69	409661.15	1996		48622	1 Urbis LED	Teceo 24 LED 500mA	40 Watts	6.00 Metres	Galvanised Steel	
Y	11	STREET LIGHTING	FISHERMANS WHARF	GRIMSBY	526851.69	409661.15	1996		62961	1 Urbis LED	Teceo 24 LED 500mA	40 Watts	6.00 Metres	Galvanised Steel	
Y	12	STREET LIGHTING	FISHERMANS WHARF	GRIMSBY	526867.76	409661.46	1988		48623	1 Urbis LED	Teceo 24 LED 500mA	40 Watts	6.00 Metres	Galvanised Steel	
Y	12	STREET LIGHTING	FISHERMANS WHARF	GRIMSBY	526867.76	409661.46	1988		62962	1 Urbis LED	Teceo 24 LED 500mA	40 Watts	6.00 Metres	Galvanised Steel	
Y	13	STREET LIGHTING	FISHERMANS WHARF	GRIMSBY	526888.02	409670.58	1988		48624	1 Urbis LED	Teceo 24 LED 500mA	40 Watts	6.00 Metres	Galvanised Steel	
Y	13	STREET LIGHTING	FISHERMANS WHARF	GRIMSBY	526888.02	409670.58	1988		62963	1 Urbis LED	Teceo 24 LED 500mA	40 Watts	6.00 Metres	Galvanised Steel	
Y	14	STREET LIGHTING	FISHERMANS WHARF	GRIMSBY	526914.98	409677.29	1988		48625	1 Urbis LED	Teceo 24 LED 500mA	40 Watts	6.00 Metres	Galvanised Steel	
Y	15	STREET LIGHTING	FISHERMANS WHARF	GRIMSBY	526944.85	409672.48	1988		48626	1 Urbis LED	Teceo 24 LED 500mA	40 Watts	6.00 Metres	Galvanised Steel	
Y	16	STREET LIGHTING	FISHERMANS WHARF	GRIMSBY	526975.96	409670.09	1988		48627	1 Urbis LED	Teceo 24 LED 500mA	40 Watts	6.00 Metres	Galvanised Steel	
Y	1	STREET LIGHTING	ALEXANDRA DOCK BANDSTAND	GRIMSBY	526997	409717	1987		61430	Coughtrie		11 Watts	3.00 Metres	Unknown	
Y	1	STREET LIGHTING	ALEXANDRA DOCK BANDSTAND	GRIMSBY	526997	409717	1987		61962	Coughtrie		11 Watts	3.00 Metres	Unknown	
Y	2	STREET LIGHTING	ALEXANDRA DOCK BANDSTAND	GRIMSBY	526998	409717	1987		61431	Coughtrie		8 Watts	3.00 Metres	Unknown	
Y	2	STREET LIGHTING	ALEXANDRA DOCK BANDSTAND	GRIMSBY	526998	409717	1987		61963	Coughtrie		8 Watts	3.00 Metres	Unknown	
Y	3	STREET LIGHTING	ALEXANDRA DOCK BANDSTAND	GRIMSBY	526998	409716	1987		61432	Coughtrie		8 Watts	3.00 Metres	Unknown	
Y	3	STREET LIGHTING	ALEXANDRA DOCK BANDSTAND	GRIMSBY	526998	409716	1987		61964	Coughtrie		8 Watts	3.00 Metres	Unknown	
Y	4	STREET LIGHTING	ALEXANDRA DOCK BANDSTAND	GRIMSBY	526998	409716	1987		61433	Coughtrie		8 Watts	3.00 Metres	Unknown	
Y	4	STREET LIGHTING	ALEXANDRA DOCK BANDSTAND	GRIMSBY	526998	409716	1987		61965	Coughtrie		8 Watts	3.00 Metres	Unknown	
Y	5	STREET LIGHTING	ALEXANDRA DOCK BANDSTAND	GRIMSBY	526997	409715	1987		61434	Coughtrie		8 Watts	3.00 Metres	Unknown	
Y	5	STREET LIGHTING	ALEXANDRA DOCK BANDSTAND	GRIMSBY	526997	409715	1987		61966	Coughtrie		8 Watts	3.00 Metres	Unknown	
Y	6	STREET LIGHTING	ALEXANDRA DOCK BANDSTAND	GRIMSBY	526996	409715	1987		61435	Coughtrie		8 Watts	3.00 Metres	Unknown	
Y	6	STREET LIGHTING	ALEXANDRA DOCK BANDSTAND	GRIMSBY	526996	409715	1987		61967	Coughtrie		8 Watts	3.00 Metres	Unknown	
Y	7	STREET LIGHTING	ALEXANDRA DOCK BANDSTAND	GRIMSBY	526996	409716	1987		61436	Coughtrie		8 Watts	3.00 Metres	Unknown	
Y	7	STREET LIGHTING	ALEXANDRA DOCK BANDSTAND	GRIMSBY	526996	409716	1987		61968	Coughtrie		8 Watts	3.00 Metres	Unknown	
Y	8	STREET LIGHTING	ALEXANDRA DOCK BANDSTAND	GRIMSBY	526996	409717	1987		61437	Coughtrie		8 Watts	3.00 Metres	Unknown	
Y	8	STREET LIGHTING	ALEXANDRA DOCK BANDSTAND	GRIMSBY	526996	409717	1987		61969	Coughtrie		8 Watts	3.00 Metres	Unknown	
Y	9	STREET LIGHTING	ALEXANDRA DOCK BANDSTAND	GRIMSBY	526997	409719	1987		61438	Coughtrie		8 Watts	3.00 Metres	Unknown	
Y	9	STREET LIGHTING	ALEXANDRA DOCK BANDSTAND	GRIMSBY	526997	409719	1987		61970	Coughtrie		8 Watts	3.00 Metres	Unknown	
Y	10	STREET LIGHTING	ALEXANDRA DOCK BANDSTAND	GRIMSBY	526999	409719	1987		61439	Coughtrie		8 Watts	3.00 Metres	Unknown	
Y	10	STREET LIGHTING	ALEXANDRA DOCK BANDSTAND	GRIMSBY	526999	409719	1987		61971	Coughtrie		8 Watts	3.00 Metres	Unknown	
Y	11	STREET LIGHTING	ALEXANDRA DOCK BANDSTAND	GRIMSBY	527000	409717	1987		61440	Coughtrie		8 Watts	3.00 Metres	Unknown	
Y	11	STREET LIGHTING	ALEXANDRA DOCK BANDSTAND	GRIMSBY	527000	409717	1987		61972	Coughtrie		8 Watts	3.00 Metres	Unknown	
Y	12	STREET LIGHTING	ALEXANDRA DOCK BANDSTAND	GRIMSBY	526999	409714	1987		61441	Coughtrie		8 Watts	3.00 Metres	Unknown	
Y	12	STREET LIGHTING	ALEXANDRA DOCK BANDSTAND	GRIMSBY	526999	409714	1987		61973	Coughtrie		8 Watts	3.00 Metres	Unknown	
Y	13	STREET LIGHTING	ALEXANDRA DOCK BANDSTAND	GRIMSBY	526997	409713	1987		61442	Coughtrie		8 Watts	3.00 Metres	Unknown	
Y	13	STREET LIGHTING	ALEXANDRA DOCK BANDSTAND	GRIMSBY	526997	409713	1987		61974	Coughtrie		8 Watts	3.00 Metres	Unknown	
Y	14	STREET LIGHTING	ALEXANDRA DOCK BANDSTAND	GRIMSBY	526995	409714	1987		61443	Coughtrie		8 Watts	3.00 Metres	Unknown	
Y	14	STREET LIGHTING	ALEXANDRA DOCK BANDSTAND	GRIMSBY	526995	409714	1987		61975	Coughtrie		8 Watts	3.00 Metres	Unknown	
Y	15	STREET LIGHTING	ALEXANDRA DOCK BANDSTAND	GRIMSBY	526994	409716	1987		61444	Coughtrie		8 Watts	3.00 Metres	Unknown	
Y	15	STREET LIGHTING	ALEXANDRA DOCK BANDSTAND	GRIMSBY	526994	409716	1987		61976	Coughtrie		8 Watts	3.00 Metres	Unknown	
Y	16	STREET LIGHTING	ALEXANDRA DOCK BANDSTAND	GRIMSBY	526994	409718	1987		61445	Coughtrie		8 Watts	3.00 Metres	Unknown	
Y	16	STREET LIGHTING	ALEXANDRA DOCK BANDSTAND	GRIMSBY	526994	409718	1987		61977	Coughtrie		8 Watts	3.00 Metres	Unknown	
Y	1	STREET LIGHTING	CORPORATION ROAD BRIDGE	GRIMSBY	527101.16	409935.65	2013		46767	Metcraft		100 Watts	7.00 Metres	Cast Iron	
Y	2	STREET LIGHTING	CORPORATION ROAD BRIDGE	GRIMSBY	527101.92	409946.79	2013		46768	Metcraft		100 Watts	7.00 Metres	Cast Iron	
Y	3	STREET LIGHTING	CORPORATION ROAD BRIDGE	GRIMSBY	527060.9	409940.97	2013		46769	Metcraft		100 Watts	7.00 Metres	Cast Iron	
Y	4	STREET LIGHTING	CORPORATION ROAD BRIDGE	GRIMSBY	527062.17	409951.73	2013		46770	Metcraft		100 Watts	7.00 Metres	Cast Iron	
Y	5	STREET LIGHTING	CORPORATION ROAD BRIDGE	GRIMSBY	527020.15	409946.16	2013		46771	Metcraft		100 Watts	7.00 Metres	Cast Iron	
Y	6	STREET LIGHTING	CORPORATION ROAD BRIDGE	GRIMSBY	527021.16	409957.3	2013		46772	Metcraft		100 Watts	7.00 Metres	Cast Iron	
Y	1	STREET LIGHTING	HERITAGE CENTRE CAR PARK	GRIMSBY	526938.02	409692.96	1993		61646	Kingswood		70 Watts	8.00 Metres	Steel	
Y	1	STREET LIGHTING	HERITAGE CENTRE CAR PARK	GRIMSBY	526938.02	409692.96	1993		62178	Kingswood		70 Watts	8.00 Metres	Steel	
Y	2	STREET LIGHTING	HERITAGE CENTRE CAR PARK	GRIMSBY	526938.53	409715.75	1993		61647	Kingswood		70 Watts	8.00 Metres	Steel	
Y	2	STREET LIGHTING	HERITAGE CENTRE CAR PARK	GRIMSBY	526938.53	409715.75	1993		62179	Kingswood		70 Watts	8.00 Metres	Steel	
Y	3	STREET LIGHTING	HERITAGE CENTRE CAR PARK	GRIMSBY	526925.62	409705.88	1993		61648	1 Urbis LED	Teceo 48 LED 700mA	104 Watts	12.00 Metres	Galvanised Steel	
Y	3	STREET LIGHTING	HERITAGE CENTRE CAR PARK	GRIMSBY	526925.62	409705.88	1993		62180	1 Urbis LED	Teceo 48 LED 700mA	104 Watts	12.00 Metres	Galvanised Steel	
Y	4	STREET LIGHTING	HERITAGE CENTRE CAR PARK	GRIMSBY	526898.78	409707.02	1993		61649	1 Urbis LED	Teceo 48 LED 700mA	104 Watts	12.00 Metres	Galvanised Steel	
Y	4	STREET LIGHTING	HERITAGE CENTRE CAR PARK	GRIMSBY	526898.78	409707.02	1993		62181	1 Urbis LED	Teceo 48 LED 700mA	104 Watts	12.00 Metres	Galvanised Steel	
Y	5	STREET LIGHTING	HERITAGE CENTRE CAR PARK	GRIMSBY	526872.45	409708.03	1993		61650	1 Urbis LED	Teceo 48 LED 700mA	104 Watts	12.00 Metres	Galvanised Steel	
Y	5	STREET LIGHTING	HERITAGE CENTRE CAR PARK	GRIMSBY	526872.45	409708.03	1993		62182	1 Urbis LED	Teceo 48 LED 700mA	104 Watts	12.00 Metres	Galvanised Steel	
Y	6	STREET LIGHTING	HERITAGE CENTRE CAR PARK	GRIMSBY	526923.3	409723.89	1993		66423	Urbis	Axia 16 LED 350mA	19 Watts	5.00 Metres	Steel	
Y	7	STREET LIGHTING	HERITAGE CENTRE CAR PARK	GRIMSBY	526893.59	409725.35	1993		66424	Urbis	Axia 16 LED 350mA	19 Watts	5.00 Metres	Steel	
Y	8	STREET LIGHTING	HERITAGE CENTRE CAR PARK	GRIMSBY	526872.11	409726.21	1993		66425	Urbis	Axia 16 LED 350mA	19 Watts	5.00 Metres	Steel	
Y	9	STREET LIGHTING	HERITAGE CENTRE CAR PARK	GRIMSBY	526852.76	409726.72	1993		66426	Urbis	Axia 16 LED 350mA	19 Watts	5.00 Metres	Steel	
Y	10	STREET LIGHTING	HERITAGE CENTRE CAR PARK	GRIMSBY	526855.74	409704.36	1993		50555	Urbis	Axia 16 LED 350mA	19 Watts	6.00 Metres	Galvanised Steel	
Y	1	STREET LIGHTING	CLAYDEN STREET	GRIMSBY	525732.53	410324.59	1994		46143	Urbis	Axia 16 LED 350mA	19 Watts	5.00 Metres	Galvanised Steel	
Y	2	STREET LIGHTING	CLAYDEN STREET	GRIMSBY	525743.62	410354.72	1995		46144	Urbis	Axia 16 LED 350mA	19 Watts	6.00 Metres	Galvanised Steel	
Y	1	STREET LIGHTING	WHARFEDALE WAY	GRIMSBY	526626.98	409931.17	2014		60618	Urbis	Axia 8 LED 350mA	10 Watts	6.00 Metres	Galvanised Steel	
Y	2	STREET LIGHTING	WHARFEDALE WAY	GRIMSBY	526626.53	409899.87	2014		60619	Urbis	Axia 8 LED 350mA	10 Watts	6.00 Metres	Galvanised Steel	
Y	1	STREET LIGHTING	APPIAN WAY	GRIMSBY	525519.57	410829.87	1999		43284	1 Urbis LED	Teceo 24 LED 500mA	40 Watts	8.00 Metres	Galvanised Steel	
Y	2	STREET LIGHTING	APPIAN WAY	GRIMSBY	525442.41	410835.54	1999		43285	1 Urbis LED	Teceo 24 LED 500mA	40 Watts	8.00 Metres	Galvanised Steel	
Y	3	STREET LIGHTING	APPIAN WAY	GRIMSBY	525422.36	410831.89	1999		43286	1 Urbis LED	Teceo 24 LED 500mA	40 Watts	8.00 Metres	Galvanised Steel	
Y	4	STREET LIGHTING	APPIAN WAY	GRIMSBY	525396.03	410841.31	1999		43287	1 Urbis LED	Teceo 24 LED 500mA	40 Watts	8.00 Metres	Galvanised Steel	
Y	5	STREET LIGHTING	APPIAN WAY	GRIMSBY	525363.87	410846.04	1999		43288	1 Urbis LED	Teceo 24 LED 500mA	40 Watts	8.00 Metres	Galvanised Steel	
Y	6	STREET LIGHTING	APPIAN WAY	GRIMSBY	525361.71	410865.87	1999		43289	1 Urbis LED	Teceo 24 LED 500mA	40 Watts	8.00 Metres	Galvanised Steel	
Y	7	STREET LIGHTING	APPIAN WAY	GRIMSBY	525335.48	410850.44	1999		43290	1 Urbis LED	Teceo 24 LED 500mA	40 Watts	8.00 Metres	Galvanised Steel	
Y	1	STREET LIGHTING	FOTHERBY STREET	GRIMSBY	527309.74	410045.05	1993		48893	Urbis	Axia 16 LED 350mA	19 Watts	6.00 Metres	Galvanised Steel	
Y	2	STREET LIGHTING	FOTHERBY STREET	GRIMSBY	527328.44	410035.3	2012		48894	Urbis	Axia 16 LED 350mA	19 Watts	6.00 Metres	Steel	
Y	1	STREET LIGHTING	GRIME STREET	GRIMSBY	527190.82	409677.13	1989		49771	1 Urbis LED	Teceo 24 LED 500mA	40 Watts	8.00 Metres	Galvanised Steel	
Y	2	STREET LIGHTING	GRIME STREET	GRIMSBY	527209.42	409681.31	1989		49772	1 Urbis LED	Teceo 16 LED 500mA	28 Watts	6.00 Metres	Galvanised Steel	
Y	3	STREET LIGHTING	GRIME STREET	GRIMSBY	527236.89	409685.23	1989		49773	1 Urbis LED	Teceo 16 LED 500mA	28 Watts	6.00 Metres	Galvanised Steel	
Y	4	STREET LIGHTING	GRIME STREET	GRIMSBY	527258.54	409690.55	1989		49774	1 Urbis LED	Teceo 16 LED 500mA	28 Watts	6.00 Metres	Galvanised Steel	
Y	5	STREET LIGHTING	GRIME STREET	GRIMSBY	527284.63	409696.57	2021	28/04/2021	68442	Urbis	Teceo 16 LED 500mA	25 Watts	6.00 Metres	Galvanised Steel	
Y	1	STREET LIGHTING	KING EDWARD STREET	GRIMSBY	527269.31	409937.72	2004		51661	1 Urbis LED	Teceo 48 LED 700mA	104 Watts	10.00 Metres	Stainless Steel	

Y	2	STREET LIGHTING	KING EDWARD STREET	GRIMSBY	527275.8	409977.83	2004		51662	1 Urbis LED	Teceo 48 LED 700mA	104 Watts	10.00 Metres	Stainless Steel	
Y	3	STREET LIGHTING	KING EDWARD STREET	GRIMSBY	527284.71	410012.27	2004		51663	1 Urbis LED	Teceo 48 LED 700mA	104 Watts	6.00 Metres	Stainless Steel	
Y	4	STREET LIGHTING	KING EDWARD STREET	GRIMSBY	527307.34	410052.84	1980		51664	1 Urbis LED	Teceo 48 LED 700mA	104 Watts	6.00 Metres	Unknown	
Y	5	STREET LIGHTING	KING EDWARD STREET	GRIMSBY	527314.04	410088.79	1980		51665	1 Urbis LED	Teceo 48 LED 700mA	104 Watts	8.00 Metres	Unknown	
Y	6	STREET LIGHTING	KING EDWARD STREET	GRIMSBY	527319.61	410120.56	1980		51666	1 Urbis LED	Teceo 48 LED 700mA	104 Watts	8.00 Metres	Unknown	
Y	7	STREET LIGHTING	KING EDWARD STREET	GRIMSBY	527324.42	410148.66	1980		51667	1 Urbis LED	Teceo 48 LED 700mA	104 Watts	8.00 Metres	Unknown	
Y	8	STREET LIGHTING	KING EDWARD STREET	GRIMSBY	527328.12	410199.41	1999		51668	1 Urbis LED	Teceo 48 LED 700mA	104 Watts	8.00 Metres	Unknown	
Y	9	STREET LIGHTING	KING EDWARD STREET	GRIMSBY	527328.78	410244.71	2019	14/10/2019	67501	Urbis	Teceo 48 LED 700mA	104 Watts	8.00 Metres	Galvanised Steel	
Y	10	STREET LIGHTING	KING EDWARD STREET	GRIMSBY	527329.11	410279.63	2006		51670	1 Urbis LED	Teceo 48 LED 700mA	104 Watts	8.00 Metres	Stainless Steel	
Y	11	STREET LIGHTING	KING EDWARD STREET	GRIMSBY	527348.15	410330.04	2009		51671	1 Urbis LED	Teceo 48 LED 700mA	104 Watts	8.00 Metres	Steel	
Y	12	STREET LIGHTING	KING EDWARD STREET	GRIMSBY	527369	410377	2001		51672	1 Urbis LED	Teceo 48 LED 700mA	104 Watts	8.00 Metres	Galvanised Steel	
Y	1	STREET LIGHTING	LOCK HILL	GRIMSBY	527213.1	410448.4	1984		66323	1 Urbis LED	Teceo 40 LED 500mA	64 Watts	10.00 Metres	Steel	
Y	2	STREET LIGHTING	LOCK HILL	GRIMSBY	527248.5	410451.5	1984		66324	1 Urbis LED	Teceo 40 LED 500mA	64 Watts	10.00 Metres	Steel	
Y	3	STREET LIGHTING	LOCK HILL	GRIMSBY	527230.8	410466.9	1984		66325	1 Urbis LED	Teceo 40 LED 500mA	64 Watts	10.00 Metres	Steel	
Y	4	STREET LIGHTING	LOCK HILL	GRIMSBY	527254.1	410477.9	1984		66326	1 Urbis LED	Teceo 40 LED 500mA	64 Watts	10.00 Metres	Steel	
Y	5	STREET LIGHTING	LOCK HILL	GRIMSBY	527275.63	410496.61	1984		52729	1 Urbis LED	Teceo 40 LED 500mA	64 Watts	10.00 Metres	Steel	
Y	6	STREET LIGHTING	LOCK HILL	GRIMSBY	527298.16	410514.97	1984		52730	1 Urbis LED	Teceo 40 LED 500mA	64 Watts	10.00 Metres	Steel	
Y	7	STREET LIGHTING	LOCK HILL	GRIMSBY	527321.71	410533.45	1984		52731	1 Urbis LED	Teceo 40 LED 500mA	64 Watts	10.00 Metres	Steel	
Y	8	STREET LIGHTING	LOCK HILL	GRIMSBY	527348.29	410551.55	1984		52732	1 Urbis LED	Teceo 40 LED 500mA	64 Watts	10.00 Metres	Steel	
Y	1	STREET LIGHTING	LOWER SPRING STREET	GRIMSBY	527247.52	410297.09	1995		52974	1 Urbis LED	Axia 16 LED 500mA	28 Watts	5.00 Metres	Galvanised Steel	
Y	2	STREET LIGHTING	LOWER SPRING STREET	GRIMSBY	527272.72	410302.27	2015		63021	Urbis	Axia 16 LED 350mA	19 Watts	6.00 Metres	Steel	
Y	3	STREET LIGHTING	LOWER SPRING STREET	GRIMSBY	527309.04	410283.96	1998		52976	1 Urbis LED	Axia 16 LED 500mA	28 Watts	6.00 Metres	Galvanised Steel	
Y	4	STREET LIGHTING	LOWER SPRING STREET	GRIMSBY	527365.09	410280.99	2012		52977	1 Urbis LED	Axia 16 LED 500mA	28 Watts	6.00 Metres	Steel	
Y	1	STREET LIGHTING	MARKET STREET	GRIMSBY	527184.63	409908.87	2004		53335	1 Urbis LED	Teceo 48 LED 500mA	79 Watts	12.00 Metres	Stainless Steel	
Y	2	STREET LIGHTING	MARKET STREET	GRIMSBY	527222.5	409933.06	2004		53336	1 Urbis LED	Teceo 40 LED 500mA	64 Watts	12.00 Metres	Stainless Steel	
Y	3	STREET LIGHTING	MARKET STREET	GRIMSBY	527249.26	409913.56	2004		53337	1 Urbis LED	Teceo 40 LED 500mA	64 Watts	12.00 Metres	Stainless Steel	
Y	4	STREET LIGHTING	MARKET STREET	GRIMSBY	527279.12	409910.58	2004		53338	1 Urbis LED	Teceo 40 LED 500mA	64 Watts	12.00 Metres	Stainless Steel	
Y	5	STREET LIGHTING	MARKET STREET	GRIMSBY	527302.73	409921.37	2004		53339	1 Urbis LED	Teceo 40 LED 500mA	64 Watts	10.00 Metres	Stainless Steel	
Y	6	STREET LIGHTING	MARKET STREET	GRIMSBY	527327.58	409917.03	2004		53340	1 Urbis LED	Teceo 40 LED 500mA	64 Watts	10.00 Metres	Stainless Steel	
Y	7	STREET LIGHTING	MARKET STREET	GRIMSBY	527351.38	409916.26	2004		53341	1 Urbis LED	Teceo 40 LED 500mA	64 Watts	6.00 Metres	Galvanised Steel	
Y	1	STREET LIGHTING	NEW STREET	GRIMSBY	527038.39	409357.87	2016	21/02/2016	68845	1 Urbis LED	Teceo 48 LED 700mA	104 Watts	10.00 Metres	Galvanised Steel	
Y	2	STREET LIGHTING	NEW STREET	GRIMSBY	527044.07	409384.23	2016	21/02/2016	68846	1 Urbis LED	Teceo 48 LED 700mA	104 Watts	10.00 Metres	Galvanised Steel	
Y	1	STREET LIGHTING	QUEEN STREET	GRIMSBY	527239.75	409440.43	1963		55788	1 Urbis LED	Teceo 24 LED 500mA	40 Watts	8.00 Metres	Steel	
Y	2	STREET LIGHTING	QUEEN STREET	GRIMSBY	527267.21	409501.38	1963		55789	1 Urbis LED	Teceo 24 LED 500mA	40 Watts	5.00 Metres	Steel	
Y	3	STREET LIGHTING	QUEEN STREET	GRIMSBY	527268.1	409540.74	1963		55790	1 Urbis LED	Teceo 24 LED 500mA	40 Watts	5.00 Metres	Steel	
Y	1	STREET LIGHTING	TOWN HALL SQUARE	GRIMSBY	527062.54	409315.23	1987		59365	1 Urbis LED	Teceo 48 LED 500mA	79 Watts	10.00 Metres	Galvanised Steel	
Y	2	STREET LIGHTING	TOWN HALL SQUARE	GRIMSBY	527088.49	409329.22	1987		59366	1 Urbis LED	Teceo 48 LED 500mA	79 Watts	10.00 Metres	Galvanised Steel	
Y	3	STREET LIGHTING	TOWN HALL SQUARE	GRIMSBY	527102.41	409329.22	1987		59367	1 Urbis LED	Teceo 48 LED 500mA	79 Watts	10.00 Metres	Galvanised Steel	
Y	4	STREET LIGHTING	TOWN HALL SQUARE	GRIMSBY	527094.31	409311.18	1987		59368	DW Windsor		150 Watts	10.00 Metres	Steel	
Y	5	STREET LIGHTING	TOWN HALL SQUARE	GRIMSBY	527125.57	409326.12	1987		59369	1 Urbis LED	Teceo 48 LED 500mA	79 Watts	10.00 Metres	Galvanised Steel	
Y	6	STREET LIGHTING	TOWN HALL SQUARE	GRIMSBY	527132.28	409307.44	1987		59370	DW Windsor		150 Watts	10.00 Metres	Steel	
Y	7	STREET LIGHTING	TOWN HALL SQUARE	GRIMSBY	527104.97	409372.52	2020	23/10/2020	68328	Urbis	Axia 16 LED 500mA	28 Watts	5.00 Metres	Cast Iron	
Y	8	STREET LIGHTING	TOWN HALL SQUARE	GRIMSBY	527080.38	409292.76	1987		59372	DW Windsor		150 Watts	8.00 Metres	Steel	
Y	9	STREET LIGHTING	TOWN HALL SQUARE	GRIMSBY	527079.28	409273.92	1987		59373	MSD		150 Watts	8.00 Metres	Steel	
Y	1	STREET LIGHTING	VICTORIA STREET NORTH	GRIMSBY	527186.25	409940.96	2004		59574	1 Urbis LED	Teceo 48 LED 700mA	104 Watts	12.00 Metres	Stainless Steel	
Y	2	STREET LIGHTING	VICTORIA STREET NORTH	GRIMSBY	527159.91	409961.22	2004		59575	1 Urbis LED	Teceo 48 LED 700mA	104 Watts	12.00 Metres	Stainless Steel	
Y	3	STREET LIGHTING	VICTORIA STREET NORTH	GRIMSBY	527186.25	409981.48	2004		59576	1 Urbis LED	Teceo 48 LED 700mA	104 Watts	12.00 Metres	Stainless Steel	
Y	4	STREET LIGHTING	VICTORIA STREET NORTH	GRIMSBY	527171.34	410017.79	1987		59577	1 Urbis LED	Teceo 48 LED 700mA	104 Watts	12.00 Metres	Galvanised Steel	
Y	5	STREET LIGHTING	VICTORIA STREET NORTH	GRIMSBY	527173.7	410047.4	2013		59578	1 Urbis LED	Teceo 48 LED 700mA	104 Watts	12.00 Metres	Galvanised Steel	
Y	6	STREET LIGHTING	VICTORIA STREET NORTH	GRIMSBY	527194.83	410078.63	2008		59579	1 Urbis LED	Teceo 48 LED 700mA	104 Watts	12.00 Metres	Steel	
Y	7	STREET LIGHTING	VICTORIA STREET NORTH	GRIMSBY	527184.91	410114.75	1987		59580	1 Urbis LED	Teceo 48 LED 700mA	104 Watts	12.00 Metres	Galvanised Steel	
Y	8	STREET LIGHTING	VICTORIA STREET NORTH	GRIMSBY	527207.03	410151.7	1987		59581	1 Urbis LED	Teceo 48 LED 700mA	104 Watts	12.00 Metres	Galvanised Steel	
Y	9	STREET LIGHTING	VICTORIA STREET NORTH	GRIMSBY	527211.59	410179.86	1987		59582	1 Urbis LED	Teceo 48 LED 700mA	104 Watts	12.00 Metres	Galvanised Steel	
Y	10	STREET LIGHTING	VICTORIA STREET NORTH	GRIMSBY	527216.53	410215.24	1987		59583	1 Urbis LED	Teceo 48 LED 700mA	104 Watts	12.00 Metres	Galvanised Steel	
Y	11	STREET LIGHTING	VICTORIA STREET NORTH	GRIMSBY	527222.1	410249.55	1987		59584	1 Urbis LED	Teceo 48 LED 700mA	104 Watts	12.00 Metres	Galvanised Steel	
Y	12	STREET LIGHTING	VICTORIA STREET NORTH	GRIMSBY	527228.47	410285.37	1987		59585	1 Urbis LED	Teceo 48 LED 700mA	104 Watts	12.00 Metres	Galvanised Steel	
Y	13	STREET LIGHTING	VICTORIA STREET NORTH	GRIMSBY	527215.23	410314.28	2007		59586	1 Urbis LED	Teceo 48 LED 700mA	104 Watts	12.00 Metres	Steel	
Y	14	STREET LIGHTING	VICTORIA STREET NORTH	GRIMSBY	527239.59	410338.04	2007		59587	1 Urbis LED	Teceo 48 LED 700mA	104 Watts	12.00 Metres	Steel	
Y	15	STREET LIGHTING	VICTORIA STREET NORTH	GRIMSBY	527229.69	410355.44	1987		61937	1 Urbis LED	Teceo 48 LED 700mA	104 Watts	12.00 Metres	Galvanised Steel	
Y	15	STREET LIGHTING	VICTORIA STREET NORTH	GRIMSBY	527229.69	410355.44	1987		62471	1 Urbis LED	Teceo 48 LED 700mA	104 Watts	12.00 Metres	Galvanised Steel	
Y	1	STREET LIGHTING	WEST STREET	GRIMSBY	527148.31	409414.2	1985		60329	1 Urbis LED	Teceo 24 LED 500mA	40 Watts	8.00 Metres	Galvanised Steel	
Y	1	STREET LIGHTING	FLOUR SQUARE	GRIMSBY	527352.97	410500.91	1984		48665	1 Urbis LED	Teceo 40 LED 500mA	64 Watts	10.00 Metres	Steel	
Y	2	STREET LIGHTING	FLOUR SQUARE	GRIMSBY	527348.39	410471.85	1984		48666	1 Urbis LED	Teceo 40 LED 500mA	64 Watts	10.00 Metres	Steel	
Y	3	STREET LIGHTING	FLOUR SQUARE	GRIMSBY	527314.16	410464.91	1984		48667	1 Urbis LED	Teceo 40 LED 500mA	64 Watts	10.00 Metres	Steel	
Y	4	STREET LIGHTING	FLOUR SQUARE	GRIMSBY	527277.83	410448.71	1984		48668	1 Urbis LED	Teceo 40 LED 500mA	64 Watts	10.00 Metres	Steel	
Y	1	STREET LIGHTING	CRESSEY STREET	GRIMSBY	527274.96	410170.4	2012		46911	1 Urbis LED	Teceo 24 LED 500mA	40 Watts	6.00 Metres	Steel	
Y	2	STREET LIGHTING	CRESSEY STREET	GRIMSBY	527300.41	410166.64	2012		46912	1 Urbis LED	Teceo 24 LED 500mA	40 Watts	6.00 Metres	Steel	
Y	3	STREET LIGHTING	CRESSEY STREET	GRIMSBY	527341.99	410160.73	2006		46913	1 Urbis LED	Teceo 24 LED 500mA	40 Watts	6.00 Metres	Stainless Steel	
Y	1	STREET LIGHTING	PRINCE ALBERT GARDENS	GRIMSBY	527479.52	410411.88	1999		55610	1 Urbis LED	Teceo 32 LED 500mA	52 Watts	8.00 Metres	Galvanised Steel	
Y	2	STREET LIGHTING	PRINCE ALBERT GARDENS	GRIMSBY	527467.57	410379.99	1999		55611	1 Urbis LED	Teceo 32 LED 500mA	52 Watts	8.00 Metres	Galvanised Steel	
Y	3	STREET LIGHTING	PRINCE ALBERT GARDENS	GRIMSBY	527460.68	410346.87	1999		55612	1 Urbis LED	Teceo 32 LED 500mA	52 Watts	8.00 Metres	Galvanised Steel	
Y	4	STREET LIGHTING	PRINCE ALBERT GARDENS	GRIMSBY	527448.33	410306.67	1999		55613	1 Urbis LED	Teceo 32 LED 500mA	52 Watts	8.00 Metres	Galvanised Steel	
Y	5	STREET LIGHTING	PRINCE ALBERT GARDENS	GRIMSBY	527439.82	410278.42	1999		55614	1 Urbis LED	Teceo 32 LED 500mA	52 Watts	8.00 Metres	Galvanised Steel	
Y	6	STREET LIGHTING	PRINCE ALBERT GARDENS	GRIMSBY	527428.68	410269.31	1999		55615	1 Urbis LED	Teceo 32 LED 500mA	52 Watts	8.00 Metres	Galvanised Steel	
Y	7	STREET LIGHTING	PRINCE ALBERT GARDENS	GRIMSBY	527427.91	410251.67	2010		55616	1 Urbis LED	Teceo 24 LED 500mA	40 Watts	8.00 Metres	Steel	
Y	8	STREET LIGHTING	PRINCE ALBERT GARDENS	GRIMSBY	527450.15	410250.77	1999		55617	1 Urbis LED	Teceo 32 LED 500mA	52 Watts	8.00 Metres	Galvanised Steel	
Y	9	STREET LIGHTING	PRINCE ALBERT GARDENS	GRIMSBY	527451.17	410267.38	1999		55618	1 Urbis LED	Teceo 32 LED 500mA	52 Watts	8.00 Metres	Galvanised Steel	
Y	1	STREET LIGHTING	RAILWAY PLACE	GRIMSBY	527705.56	410492.36	2014	10/11/2014	55878	1 Urbis LED	Teceo 40 LED 500mA	64 Watts	8.00 Metres	Galvanised Steel	
Y	2	STREET LIGHTING	RAILWAY PLACE	GRIMSBY	527676.45	410478.82	2014	10/11/2014	55879	1 Urbis LED	Teceo 40 LED 500mA	64 Watts	8.00 Metres	Galvanised Steel	
Y	3	STREET LIGHTING	RAILWAY PLACE	GRIMSBY	527642.27	410485.65	2014	10/11/2014	55880	1 Urbis LED	Teceo 40 LED 500mA	64 Watts	8.00 Metres	Galvanised Steel	
Y	4	STREET LIGHTING	RAILWAY PLACE	GRIMSBY	527616.7	410474.77	2014	10/11/2014	55881	1 Urbis LED	Teceo 40 LED 500mA	64 Watts	8.00 Metres	Galvanised Steel	
Y	5	STREET LIGHTING	RAILWAY PLACE	GRIMSBY	527587.44	410484.97	2014	10/11/2014	55882	1 Urbis LED	Teceo 40 LED 500mA	64 Watts	8.00 Metres	Galvanised Steel	
Y	6	STREET LIGHTING	RAILWAY PLACE	GRIMSBY	527568.81	410476.46	2014	10/11/2014	55883	1 Urbis LED	Teceo 40 LED 500mA	64 Watts	8.00 Metres	Galvanised Steel	
Y	7	STREET LIGHTING	RAILWAY PLACE	GRIMSBY	527560.3	410459.96	1968		55884	1 Urbis LED	Teceo 16 LED 500mA	28 Watts	5.00 Metres	Steel	
Y	8	STREET LIGHTING	RAILWAY PLACE	GRIMSBY	527569.82	410448.62	1968		55885	1 Urbis LED	Axia 16 LED 500mA	28 Watts	5.00 Metres	Steel	
Y	1	STREET LIGHTING	MIDDLE COURT	GRIMSBY	527200.67	409606.49	2008		53558	1 Urbis LED	Teceo 40 LED 500mA	64 Watts	8.00 Metres	Steel	
Y	2	STREET LIGHTING	MIDDLE COURT	GRIMSBY	527223.22	409604.69	2008		61804	1 Urbis LED	Teceo 40 LED 500mA	64 Watts	8.00 Metres	Steel	
Y	2	STREET LIGHTING	MIDDLE COURT	GRIMSBY	527223.22	409604.69	2008		62336	1 Urbis LED	Teceo 40 LED 500mA	64 Watts	8.00 Metres	Steel	
Y	3	STREET LIGHTING	MIDDLE COURT	GRIMSBY	527236.96	409602.89	2008		61805	1 Urbis LED	Teceo 40 LED 500mA	64 Watts	8.00 Metres	Steel	
Y	3	STREET LIGHTING	MIDDLE COURT	GRIMSBY	527236.96	409602.89	2008		62337	1 Urbis LED	Teceo 40 LED 500mA	64 Watts	8.00 Metres	Steel	
Y	4	STREET LIGHTING	MIDDLE COURT	GRIMSBY	527257.35	409604.06	2008		61806	1 Urbis LED	Teceo 40 LED 500mA	64 Watts	8.00 Metres	Steel	
Y	4	STREET LIGHTING	MIDDLE COURT	GRIMSBY	527257.35	409604.06	2008		62338	1 Urbis LED	Teceo 40 LED 500mA	64 Watts	8.00 Metres	Steel	
Y	5	STREET LIGHTING	MIDDLE COURT	GRIMSBY	527280.3	409600.6	2008		61807	1 Urbis LED	Teceo 40 LED 500mA	64 Watts	8.00 Metres	Steel	
Y	5	STREET LIGHTING	MIDDLE COURT	GRIMSBY	527280.3	409600.6	2008		62339	1 Urbis LED	Teceo 40 LED 500mA	64 Watts	8.00 Metres	Steel	
Y	6	STREET LIGHTING	MIDDLE COURT	GRIMSBY	527321.8	409594.9	2008		61808	1 Urbis LED	Teceo 40 LED 500mA	64 Watts	8.00 Metres	Steel	
Y	6	STREET LIGHTING	MIDDLE COURT	GRIMSBY	527321.8	409594.9	2008		62340	1 Urbis LED	Teceo 40 LED 500mA	64 Watts	8.00 Metres	Steel	
Y	1	STREET LIGHTING	FREEPORT WHARF	GRIMSBY	527146.62	409922.43	1985		49006	1 Urbis LED	Teceo 48 LED 700mA	104 Watts	12.00 Metres	Galvanised Steel	
Y	2	STREET LIGHTING	FREEPORT WHARF	GRIMSBY	527131.96	409943.9	1985		49007	1 Urbis LED	Teceo 48 LED 700mA	104 Watts	12.00 Metres	Galvanised Steel	
Y	1	STREET LIGHTING	ALBERT STREET EAST	GRIMSBY	527770.39	410160.53	2000		42853	1 Urbis LED	Teceo 24 LED 500mA	40 Watts	6.00 Metres	Galvanised Steel	
Y	2	STREET LIGHTING	ALBERT STREET EAST	GRIMSBY	527797.48	410141.54	2000		42854	1 Urbis LED	Teceo 24 LED 500mA	40 Watts	6.00 Metres	Galvanised Steel	
Y	3	STREET LIGHTING	ALBERT STREET EAST	GRIMSBY	527834.44	410145.09	2000		42855	1 Urbis LED	Teceo 24 LED 500mA	40 Watts	6.00 Metres	Galvanised Steel	
Y	4	STREET LIGHTING	ALBERT STREET EAST	GRIMSBY	527861.82	410126.19	2000		42856	1 Urbis LED	Teceo 24 LED 500mA	40 Watts	6.00 Metres	Galvanised Steel	
Y	5	STREET LIGHTING	ALBERT STREET EAST	GRIMSBY	527894.23	410128.12	2000		42857	1 Urbis LED	Teceo 24 LED 500mA	40 Watts	6.00 Metres	Galvanised Steel	
Y	6	STREET LIGHTING	ALBERT STREET EAST	GRIMSBY	527933.53	410110.8	2000		42858	1 Urbis LED	Teceo 24 LED 500mA	40 Watts	6.00 Metres	Galvanised Steel	
Y	1	STREET LIGHTING	ALBERT STREET WEST	GRIMSBY	527657.23	410163.86	2001		42863	1 Urbis LED	Teceo 48 LED 500mA	79 Watts	8.00 Metres	Galvanised Steel	
Y	2	STREET LIGHTING	ALBERT STREET WEST	GRIMSBY	527621.81	410180.14	2001		42864	1 Urbis LED	Teceo 48 LED 500mA	79 Watts	8.00 Metres	Galvanised Steel	
Y	3	STREET LIGHTING	ALBERT STREET WEST	GRIMSBY	527576.57	410173.48	2001		42865	1 Urbis LED	Teceo 48 LED 500mA	79 Watts	8.00 Metres	Galvanised Steel	
Y	4	STREET LIGHTING	ALBERT STREET WEST	GRIMSBY	527546.77	410188.97	2001		42866	1 Urbis LED	Teceo 48 LED 500mA	79 Watts	8.00 Metres	Galvanised Steel	
Y	1	STREET LIGHTING	ALBION STREET	GRIMSBY	528029.99	410351.44	1998		42890	1 Urbis LED	Ampera 48 LED 700mA	104 Watts	12.00 Metres	Galvanised Steel	
Y	2	STREET LIGHTING	ALBION STREET	GRIMSBY	528007.9	410317.1	1998		42891	1 Urbis LED	Teceo 40 LED 500mA	64 Watts	8.00 Metres	Galvanised Steel	

Y	3	STREET LIGHTING	ALBION STREET	GRIMSBY	528018.94	410296.02	1998		42892	1 Urbis LED	Teceo 40 LED 500mA	64 Watts	8.00 Metres	Galvanised Steel	
Y	4	STREET LIGHTING	ALBION STREET	GRIMSBY	527995.93	410274.02	1998		42893	1 Urbis LED	Teceo 40 LED 500mA	64 Watts	8.00 Metres	Galvanised Steel	
Y	5	STREET LIGHTING	ALBION STREET	GRIMSBY	527997.77	410241.89	1998		42894	1 Urbis LED	Teceo 40 LED 500mA	64 Watts	8.00 Metres	Galvanised Steel	
Y	5	STREET LIGHTING	ALBION STREET	GRIMSBY	527997.77	410241.89	1998		62966	1 Urbis LED	Teceo 40 LED 500mA	64 Watts	8.00 Metres	Galvanised Steel	
Y	6	STREET LIGHTING	ALBION STREET	GRIMSBY	527970.77	410220.74	1998		42895	1 Urbis LED	Teceo 40 LED 500mA	64 Watts	8.00 Metres	Galvanised Steel	
Y	7	STREET LIGHTING	ALBION STREET	GRIMSBY	527973.2	410185.6	1998		42896	1 Urbis LED	Teceo 40 LED 500mA	64 Watts	8.00 Metres	Galvanised Steel	
Y	8	STREET LIGHTING	ALBION STREET	GRIMSBY	527949.91	410158.56	1998		42897	Urbis	AXIA 3.2 32 LED 630 mA	62 Watts	8.00 Metres	Galvanised Steel	
Y	9	STREET LIGHTING	ALBION STREET	GRIMSBY	527957.41	410131.93	1998		42898	1 Urbis LED	Teceo 40 LED 500mA	64 Watts	8.00 Metres	Galvanised Steel	
Y	10	STREET LIGHTING	ALBION STREET	GRIMSBY	527935.94	410113.7	1998		42899	1 Urbis LED	Teceo 40 LED 500mA	64 Watts	8.00 Metres	Galvanised Steel	
Y	11	STREET LIGHTING	ALBION STREET	GRIMSBY	527944.24	410087.88	1998		42900	Urbis	AXIA 3.2 32 LED 630 mA	62 Watts	8.00 Metres	Galvanised Steel	
Y	12	STREET LIGHTING	ALBION STREET	GRIMSBY	527936.95	410062.46	2014		42901	Urbis	AXIA 3.2 32 LED 630 mA	62 Watts	8.00 Metres	Galvanised Steel	
Y	13	STREET LIGHTING	ALBION STREET	GRIMSBY	527913.26	410029.35	1998		42902	1 Urbis LED	Teceo 40 LED 500mA	64 Watts	8.00 Metres	Galvanised Steel	
Y	14	STREET LIGHTING	ALBION STREET	GRIMSBY	527921.56	410006.77	1998		42903	Urbis	AXIA 3.2 32 LED 630 mA	62 Watts	8.00 Metres	Galvanised Steel	
Y	15	STREET LIGHTING	ALBION STREET	GRIMSBY	527901.71	409988.44	1970		42904	1 Urbis LED	Teceo 40 LED 500mA	64 Watts	8.00 Metres	Steel	
Y	16	STREET LIGHTING	ALBION STREET	GRIMSBY	527911.84	409968.49	1998		42905	1 Urbis LED	Teceo 40 LED 500mA	64 Watts	8.00 Metres	Galvanised Steel	
Y	17	STREET LIGHTING	ALBION STREET	GRIMSBY	527892.8	409950.46	1970		42906	1 Urbis LED	Teceo 40 LED 500mA	64 Watts	8.00 Metres	Steel	
Y	18	STREET LIGHTING	ALBION STREET	GRIMSBY	527885.16	409923.43	1970		42907	1 Urbis LED	Teceo 40 LED 500mA	64 Watts	8.00 Metres	Steel	
Y	19	STREET LIGHTING	ALBION STREET	GRIMSBY	527888.2	409897.6	1970		42908	Urbis	AXIA 3.2 32 LED 630 mA	62 Watts	8.00 Metres	Steel	
Y	20	STREET LIGHTING	ALBION STREET	GRIMSBY	527873.5	409883.37	2024	02/02/2024	69791	Urbis	Teceo 40 LED 500mA	64 Watts	8.00 Metres	Galvanised Steel	
Y	21	STREET LIGHTING	ALBION STREET	GRIMSBY	527862.63	409845.27	1970		42910	1 Urbis LED	Teceo 40 LED 500mA	64 Watts	8.00 Metres	Steel	
Y	22	STREET LIGHTING	ALBION STREET	GRIMSBY	527864.27	409814.69	2015	30/10/2015	42911	1 Urbis LED	Teceo 40 LED 500mA	64 Watts	8.00 Metres	Galvanised Steel	
Y	23	STREET LIGHTING	ALBION STREET	GRIMSBY	527846.93	409790.51	1970		42912	1 Urbis LED	Teceo 40 LED 500mA	64 Watts	8.00 Metres	Steel	
Y	24	STREET LIGHTING	ALBION STREET	GRIMSBY	527848.99	409757.64	2024	17/01/2024	69792	Urbis	AXIA 3.2 32 LED 630 mA	62 Watts	8.00 Metres	Galvanised Steel	
Y	25	STREET LIGHTING	ALBION STREET	GRIMSBY	527829.21	409734.88	1997		42914	1 Urbis LED	Teceo 40 LED 500mA	64 Watts	8.00 Metres	Galvanised Steel	
Y	1	STREET LIGHTING	ALBERT STREET EAST SERVICE ROAD	GRIMSBY	527786.21	410182.36	1963		42862	1 Urbis LED	Teceo 24 LED 500mA	40 Watts	5.00 Metres	Aluminium	
Y	1	STREET LIGHTING	BEVAN HOUSE	GRIMSBY	527953.91	410192.93	2007		44105	1 Urbis LED	Teceo 24 LED 500mA	40 Watts	6.00 Metres	Steel	
Y	1	STREET LIGHTING	BATH STREET	GRIMSBY	528038.55	410323.08	1998		43798	Urbis	Axia 16 LED 350mA	19 Watts	5.00 Metres	Galvanised Steel	
Y	2	STREET LIGHTING	BATH STREET	GRIMSBY	528034.87	410305.58	1998		43799	Urbis	Axia 16 LED 350mA	19 Watts	5.00 Metres	Galvanised Steel	
Y	3	STREET LIGHTING	BATH STREET	GRIMSBY	528073.81	410314.05	1998		43800	Urbis	Axia 16 LED 350mA	19 Watts	5.00 Metres	Galvanised Steel	
Y	4	STREET LIGHTING	BATH STREET	GRIMSBY	528071.36	410302.61	1998		43801	Urbis	Axia 16 LED 350mA	19 Watts	5.00 Metres	Galvanised Steel	
Y	5	STREET LIGHTING	BATH STREET	GRIMSBY	528105.39	410308.25	1998		43802	Urbis	Axia 16 LED 350mA	19 Watts	5.00 Metres	Galvanised Steel	
Y	6	STREET LIGHTING	BATH STREET	GRIMSBY	528102.81	410291.68	1998		43803	Urbis	Axia 16 LED 350mA	19 Watts	5.00 Metres	Galvanised Steel	
Y	7	STREET LIGHTING	BATH STREET	GRIMSBY	528143.5	410302.55	1998		43804	Urbis	Axia 16 LED 350mA	19 Watts	5.00 Metres	Galvanised Steel	
Y	8	STREET LIGHTING	BATH STREET	GRIMSBY	528138.53	410279.63	1998		43805	Urbis	Axia 16 LED 350mA	19 Watts	5.00 Metres	Galvanised Steel	
Y	1	STREET LIGHTING	BRADLEY STREET	GRIMSBY	527566.77	409493.08	1996		44534	1 Urbis LED	Teceo 24 LED 500mA	40 Watts	6.00 Metres	Galvanised Steel	
Y	2	STREET LIGHTING	BRADLEY STREET	GRIMSBY	527538.67	409506.18	1996		44535	1 Urbis LED	Teceo 24 LED 500mA	40 Watts	6.00 Metres	Galvanised Steel	
Y	3	STREET LIGHTING	BRADLEY STREET	GRIMSBY	527504.33	409511.07	1996		44536	1 Urbis LED	Teceo 24 LED 500mA	40 Watts	6.00 Metres	Galvanised Steel	
Y	1	STREET LIGHTING	BUTTERMERE WAY	GRIMSBY	527872.57	409800.21	2003		45028	Urbis	Axia 16 LED 350mA	19 Watts	6.00 Metres	Stainless Steel	
Y	2	STREET LIGHTING	BUTTERMERE WAY	GRIMSBY	527900.01	409784.38	2003		45029	Urbis	Axia 16 LED 350mA	19 Watts	6.00 Metres	Stainless Steel	
Y	3	STREET LIGHTING	BUTTERMERE WAY	GRIMSBY	527926.33	409783.73	2003		45030	Urbis	Axia 16 LED 350mA	19 Watts	6.00 Metres	Stainless Steel	
Y	1	STREET LIGHTING	CHURCH STREET	GRIMSBY	527547.87	410263.01	1993		46067	1 Urbis LED	Teceo 32 LED 500mA	52 Watts	6.00 Metres	Galvanised Steel	
Y	2	STREET LIGHTING	CHURCH STREET	GRIMSBY	527587.8	410248.33	1993		46068	1 Urbis LED	Teceo 32 LED 500mA	52 Watts	6.00 Metres	Galvanised Steel	
Y	3	STREET LIGHTING	CHURCH STREET	GRIMSBY	527625.52	410259.02	1993		46069	1 Urbis LED	Teceo 32 LED 500mA	52 Watts	6.00 Metres	Galvanised Steel	
Y	4	STREET LIGHTING	CHURCH STREET	GRIMSBY	527663.87	410243.14	1997		46070	1 Urbis LED	Teceo 32 LED 500mA	52 Watts	6.00 Metres	Galvanised Steel	
Y	1	STREET LIGHTING	DUNCOMBE STREET	GRIMSBY	527592.07	409947.29	1975		47637	1 Urbis LED	Teceo 32 LED 500mA	52 Watts	5.00 Metres	Galvanised Steel	
Y	2	STREET LIGHTING	DUNCOMBE STREET	GRIMSBY	527624.73	409943.3	1968		47638	1 Urbis LED	Teceo 32 LED 500mA	52 Watts	5.00 Metres	Steel	
Y	3	STREET LIGHTING	DUNCOMBE STREET	GRIMSBY	527665.85	409938.34	1998		47639	1 Urbis LED	Teceo 32 LED 500mA	52 Watts	8.00 Metres	Galvanised Steel	
Y	4	STREET LIGHTING	DUNCOMBE STREET	GRIMSBY	527690.16	409947.07	2015	12/08/2015	47640	1 Urbis LED	Teceo 32 LED 500mA	52 Watts	8.00 Metres	Galvanised Steel	
Y	5	STREET LIGHTING	DUNCOMBE STREET	GRIMSBY	527721.18	409945.07	2000		47641	1 Urbis LED	Teceo 32 LED 500mA	52 Watts	8.00 Metres	Galvanised Steel	
Y	6	STREET LIGHTING	DUNCOMBE STREET	GRIMSBY	527751.72	409926.25	2008		47642	1 Urbis LED	Teceo 32 LED 500mA	52 Watts	8.00 Metres	Steel	
Y	7	STREET LIGHTING	DUNCOMBE STREET	GRIMSBY	527775.07	409921.84	2024	12/09/2024	69970	Urbis	Teceo 32 LED 500mA	52 Watts	8.00 Metres	Galvanised Steel	
Y	8	STREET LIGHTING	DUNCOMBE STREET	GRIMSBY	527800.21	409927.47	1999		47644	1 Urbis LED	Teceo 32 LED 500mA	52 Watts	8.00 Metres	Galvanised Steel	
Y	9	STREET LIGHTING	DUNCOMBE STREET	GRIMSBY	527829.34	409908.23	2007		47645	1 Urbis LED	Teceo 32 LED 500mA	52 Watts	8.00 Metres	Steel	
Y	10	STREET LIGHTING	DUNCOMBE STREET	GRIMSBY	527864.3	409911.05			69971						
Y	1	STREET LIGHTING	EAST STREET	GRIMSBY	527199.06	409388.59	2014		47726	1 Urbis LED	Teceo 48 LED 700mA	104 Watts	8.00 Metres	Galvanised Steel	
Y	2	STREET LIGHTING	EAST STREET	GRIMSBY	527200.28	409354.87	2008		47727	1 Urbis LED	Teceo 48 LED 700mA	104 Watts	10.00 Metres	Steel	
Y	3	STREET LIGHTING	EAST STREET	GRIMSBY	527178.86	409314.78	1987		47728	1 Urbis LED	Teceo 48 LED 700mA	104 Watts	10.00 Metres	Galvanised Steel	
Y	4	STREET LIGHTING	EAST STREET	GRIMSBY	527159.75	409311.05	1987		47729	1 Urbis LED	Teceo 48 LED 700mA	104 Watts	10.00 Metres	Galvanised Steel	
Y	1	STREET LIGHTING	EASTGATE	GRIMSBY	527476.63	409505.74	1999		47767	1 Urbis LED	Teceo 24 LED 500mA	40 Watts	6.00 Metres	Galvanised Steel	
Y	2	STREET LIGHTING	EASTGATE	GRIMSBY	527433.97	409521.38	1999		47768	1 Urbis LED	Teceo 24 LED 500mA	40 Watts	6.00 Metres	Galvanised Steel	
Y	3	STREET LIGHTING	EASTGATE	GRIMSBY	527396.92	409527.43	2024	06/08/2024	69961	Urbis	Teceo 24 LED 500mA	40 Watts	6.00 Metres	Galvanised Steel	
Y	4	STREET LIGHTING	EASTGATE	GRIMSBY	527365.36	409531.25	2007		47770	1 Urbis LED	Teceo 24 LED 500mA	40 Watts	6.00 Metres	Steel	
Y	1	STREET LIGHTING	ELLIS WAY	GRIMSBY	527567.36	409551.82	1990		47920	1 Urbis LED	Ampera 48 LED 700mA	104 Watts	12.00 Metres	Galvanised Steel	
Y	2	STREET LIGHTING	ELLIS WAY	GRIMSBY	527566.76	409573.34	1990		47921	1 Urbis LED	Ampera 48 LED 700mA	104 Watts	12.00 Metres	Galvanised Steel	
Y	3	STREET LIGHTING	ELLIS WAY	GRIMSBY	527512.82	409556.59	1990		47922	1 Urbis LED	Ampera 48 LED 700mA	104 Watts	12.00 Metres	Galvanised Steel	
Y	4	STREET LIGHTING	ELLIS WAY	GRIMSBY	527521.47	409580.52	1990		47923	1 Urbis LED	Ampera 48 LED 700mA	104 Watts	12.00 Metres	Galvanised Steel	
Y	5	STREET LIGHTING	ELLIS WAY	GRIMSBY	527474.7	409588.07	1990		47924	1 Urbis LED	Ampera 48 LED 700mA	104 Watts	12.00 Metres	Galvanised Steel	
Y	6	STREET LIGHTING	ELLIS WAY	GRIMSBY	527469.55	409561.47	1990		47925	1 Urbis LED	Ampera 48 LED 700mA	104 Watts	12.00 Metres	Galvanised Steel	
Y	7	STREET LIGHTING	ELLIS WAY	GRIMSBY	527429.17	409569.45	1990		47926	1 Urbis LED	Ampera 48 LED 700mA	104 Watts	12.00 Metres	Galvanised Steel	
Y	8	STREET LIGHTING	ELLIS WAY	GRIMSBY	527444.03	409593.53	1990		47927	1 Urbis LED	Ampera 48 LED 700mA	104 Watts	12.00 Metres	Galvanised Steel	
Y	9	STREET LIGHTING	ELLIS WAY	GRIMSBY	527378.91	409573.57	1990		47928	1 Urbis LED	Ampera 48 LED 700mA	104 Watts	12.00 Metres	Galvanised Steel	
Y	10	STREET LIGHTING	ELLIS WAY	GRIMSBY	527381.19	409599.39	1990		47929	1 Urbis LED	Ampera 48 LED 700mA	104 Watts	12.00 Metres	Galvanised Steel	
Y	11	STREET LIGHTING	ELLIS WAY	GRIMSBY	527333.98	409569.14	1990		47930	1 Urbis LED	Ampera 48 LED 700mA	104 Watts	12.00 Metres	Galvanised Steel	
Y	12	STREET LIGHTING	ELLIS WAY	GRIMSBY	527330.18	409593.44	1990		47931	1 Urbis LED	Ampera 48 LED 700mA	104 Watts	12.00 Metres	Galvanised Steel	
Y	13	STREET LIGHTING	ELLIS WAY	GRIMSBY	527278.87	409585.58	1990		47932	1 Urbis LED	Ampera 48 LED 700mA	104 Watts	12.00 Metres	Galvanised Steel	
Y	14	STREET LIGHTING	ELLIS WAY	GRIMSBY	527281.7	409556.15	1990		47933	1 Urbis LED	Ampera 48 LED 700mA	104 Watts	12.00 Metres	Galvanised Steel	
Y	15	STREET LIGHTING	ELLIS WAY	GRIMSBY	527238.03	409563.54	1990		61574	1 Urbis LED	Ampera 48 LED 700mA	104 Watts	18.00 Metres	Galvanised Steel	
Y	15	STREET LIGHTING	ELLIS WAY	GRIMSBY	527238.03	409563.54	1990		62106	1 Urbis LED	Ampera 48 LED 700mA	104 Watts	18.00 Metres	Galvanised Steel	
Y	1	STREET LIGHTING	ELLIS WAY FOOTWAY	GRIMSBY	527446.15	409588.21	1997		47934	Urbis		16 Watts	4.00 Metres	Steel	
Y	2	STREET LIGHTING	ELLIS WAY FOOTWAY	GRIMSBY	527427.39	409590.65	1997		47935	Urbis		16 Watts	4.00 Metres	Steel	
Y	3	STREET LIGHTING	ELLIS WAY FOOTWAY	GRIMSBY	527408.28	409593	1997		47936	Urbis		16 Watts	4.00 Metres	Steel	
Y	4	STREET LIGHTING	ELLIS WAY FOOTWAY	GRIMSBY	527389.04	409593.95	1997		47937	Urbis		16 Watts	4.00 Metres	Steel	
Y	5	STREET LIGHTING	ELLIS WAY FOOTWAY	GRIMSBY	527369.67	409593.25	1997		47938	Urbis		16 Watts	4.00 Metres	Steel	
Y	6	STREET LIGHTING	ELLIS WAY FOOTWAY	GRIMSBY	527344.36	409590.22	1997		47939	Urbis		16 Watts	4.00 Metres	Steel	
Y	7	STREET LIGHTING	ELLIS WAY FOOTWAY	GRIMSBY	527325.5	409587.24	1997		47940	Urbis		16 Watts	4.00 Metres	Steel	
Y	8	STREET LIGHTING	ELLIS WAY FOOTWAY	GRIMSBY	527306.64	409584.39	1997		47941	Urbis		16 Watts	4.00 Metres	Steel	
Y	9	STREET LIGHTING	ELLIS WAY FOOTWAY	GRIMSBY	527287.9	409581.42	1997		47942	Urbis		16 Watts	4.00 Metres	Steel	
Y	10	STREET LIGHTING	ELLIS WAY FOOTWAY	GRIMSBY	527269.25	409578.43	1997		47943	Urbis		16 Watts	4.00 Metres	Steel	
Y	11	STREET LIGHTING	ELLIS WAY FOOTWAY	GRIMSBY	527250.44	409575.65	1997		47944	Urbis		16 Watts	4.00 Metres	Steel	
Y	1	STREET LIGHTING	HARLECH WAY	GRIMSBY	527726.9	409867.5	2003		50190	1 Urbis LED	Axia 16 LED 500mA	28 Watts	6.00 Metres	Stainless Steel	
Y	2	STREET LIGHTING	HARLECH WAY	GRIMSBY	527748.16	409872.62	2003		50191	Urbis	Axia 8 LED 350mA	10 Watts	6.00 Metres	Galvanised Steel	
Y	3	STREET LIGHTING	HARLECH WAY	GRIMSBY	527751.12	409898.66	2003		50192	Urbis	Axia 8 LED 350mA	10 Watts	6.00 Metres	Galvanised Steel	
Y	4	STREET LIGHTING	HARLECH WAY	GRIMSBY	527752.04	409852.6	2003		50193	1 Urbis LED	Axia 16 LED 500mA	28 Watts	6.00 Metres	Stainless Steel	
Y	5	STREET LIGHTING	HARLECH WAY	GRIMSBY	527776.21	409859.23	2003		50194	1 Urbis LED	Axia 16 LED 500mA	28 Watts	6.00 Metres	Stainless Steel	
Y	6	STREET LIGHTING	HARLECH WAY	GRIMSBY	527776.8	409874.96	2003		50195	Urbis	Axia 8 LED 350mA	10 Watts	6.00 Metres	Galvanised Steel	
Y	7	STREET LIGHTING	HARLECH WAY	GRIMSBY	527780.61	409903.66	2003		50196	Urbis	Axia 8 LED 350mA	10 Watts	6.00 Metres	Galvanised Steel	
Y	8	STREET LIGHTING	HARLECH WAY	GRIMSBY	527798.2	409857.31	2003		50197	1 Urbis LED	Axia 16 LED 500mA	28 Watts	6.00 Metres	Stainless Steel	
Y	9	STREET LIGHTING	HARLECH WAY	GRIMSBY	527823.58	409846.64	2003		50198	Urbis	Axia 8 LED 350mA	10 Watts	6.00 Metres	Galvanised Steel	
Y	10	STREET LIGHTING	HARLECH WAY	GRIMSBY	527849.92	409839.25	2003		50199	Urbis	Axia 8 LED 350mA	10 Watts	6.00 Metres	Galvanised Steel	
Y	11	STREET LIGHTING	HARLECH WAY	GRIMSBY	527835.47	409864.54	2002		50200	1 Urbis LED	Axia 16 LED 500mA	28 Watts	6.00 Metres	Galvanised Steel	
Y	12	STREET LIGHTING	HARLECH WAY	GRIMSBY	527820.55	409829.39	2003		50201	Urbis	Axia 8 LED 350mA	10 Watts	6.00 Metres	Galvanised Steel	
Y	13	STREET LIGHTING	HARLECH WAY	GRIMSBY	527820.28	409814.39	2003		50202	Urbis	Axia 8 LED 350mA	10 Watts	6.00 Metres	Galvanised Steel	
Y	14	STREET LIGHTING	HARLECH WAY	GRIMSBY	527781.17	409819.65	2003		50203	1 Urbis LED	Axia 16 LED 500mA	28 Watts	6.00 Metres	Galvanised Steel	
Y	15	STREET LIGHTING	HARLECH WAY	GRIMSBY	527751.46	409823.92	2003		50204	1 Urbis LED	Axia 16 LED 500mA	28 Watts	6.00 Metres	Galvanised Steel	
Y	16	STREET LIGHTING	HARLECH WAY	GRIMSBY	527732.29	409816.65	2003		50205	Urbis	Axia 8 LED 350mA	10 Watts	6.00 Metres	Galvanised Steel	
Y	1	STREET LIGHTING	STANAGE WALK	GRIMSBY	527879.79	409762.65	2010		58106	Urbis	Axia 16 LED 350mA	19 Watts	6.00 Metres	Steel	
Y	2	STREET LIGHTING	STANAGE WALK	GRIMSBY	527880.94	409735.3	2013		58107	Urbis	Axia 16 LED 350mA	19 Watts	6.00 Metres	Steel	
Y	3	STREET LIGHTING	STANAGE WALK	GRIMSBY	527903.71	409763.66	2003		58108	Urbis	Axia 8 LED 350mA	10 Watts	5.00 Metres	Galvanised Steel	
Y	4	STREET LIGHTING	STANAGE WALK	GRIMSBY	527906.12	409744.17	2013		58109	Urbis	Axia 16 LED 350mA	19 Watts	6.00 Metres	Steel	
Y	5	STREET LIGHTING	STANAGE WALK	GRIMSBY	527901.18	409720.65	2013	01/06/2013	58110	Urbis	Axia 8 LED 350mA	10 Watts	6.00 Metres	Steel	

Y	6	STREET LIGHTING	STANAGE WALK	GRIMSBY	527929.13	409744.38	2013	05/02/2013	58111	Urbis	Axia 16 LED 350mA	19 Watts	6.00 Metres	Steel	
Y	7	STREET LIGHTING	STANAGE WALK	GRIMSBY	527921.24	409726.08			62578	Urbis	Axia 16 LED 350mA	19 Watts	5.00 Metres		
Y	1	STREET LIGHTING	HOLLES STREET	GRIMSBY	527486.5	409549.16	1995		50937	1 Urbis LED	Teceo 24 LED 500mA	40 Watts	8.00 Metres	Steel	
Y	2	STREET LIGHTING	HOLLES STREET	GRIMSBY	527481.82	409525.55	1995		50938	1 Urbis LED	Teceo 24 LED 500mA	40 Watts	6.00 Metres	Steel	
Y	1	STREET LIGHTING	HOLME STREET	GRIMSBY	527342.07	409468.85	1985		50964	1 Urbis LED	Axia 16 LED 500mA	28 Watts	6.00 Metres	Galvanised Steel	
Y	2	STREET LIGHTING	HOLME STREET	GRIMSBY	527375.99	409455.68	1985		50965	1 Urbis LED	Axia 16 LED 500mA	28 Watts	6.00 Metres	Galvanised Steel	
Y	3	STREET LIGHTING	HOLME STREET	GRIMSBY	527410.47	409461.02	2018	16/08/2018	67052	Urbis	Axia 16 LED 500mA	28 Watts	6.00 Metres	Galvanised Steel	
Y	4	STREET LIGHTING	HOLME STREET	GRIMSBY	527442.57	409446.51	1985		50967	1 Urbis LED	Axia 16 LED 500mA	28 Watts	6.00 Metres	Galvanised Steel	
Y	1	STREET LIGHTING	HOPE STREET	GRIMSBY	528083.24	410289.21	1998		51002	Urbis	Axia 8 LED 350mA	10 Watts	5.00 Metres	Galvanised Steel	
Y	2	STREET LIGHTING	HOPE STREET	GRIMSBY	528059.12	410267.86	1998		51003	Urbis	Axia 16 LED 350mA	19 Watts	5.00 Metres	Galvanised Steel	
Y	3	STREET LIGHTING	HOPE STREET	GRIMSBY	528074.22	410255.61	1998		51004	Urbis	Axia 16 LED 350mA	19 Watts	5.00 Metres	Galvanised Steel	
Y	4	STREET LIGHTING	HOPE STREET	GRIMSBY	528036.1	410128.5	2013		48739	Urbis	Axia 16 LED 350mA	19 Watts	6.00 Metres	Steel	
Y	5	STREET LIGHTING	HOPE STREET	GRIMSBY	528002.97	410044.15	2013		62955	Urbis	Axia 16 LED 350mA	19 Watts	6.00 Metres	Steel	
Y	6	STREET LIGHTING	HOPE STREET	GRIMSBY	528017.89	410064.67	2011		51005	Urbis	Axia 16 LED 350mA	19 Watts	6.00 Metres	Steel	
Y	7	STREET LIGHTING	HOPE STREET	GRIMSBY	528002.95	410044.53	2011		51006	1 Urbis LED	Axia 16 LED 500mA	28 Watts	6.00 Metres	Steel	
Y	8	STREET LIGHTING	HOPE STREET	GRIMSBY	527995.1	410012.79	2011		51007	1 Urbis LED	Axia 16 LED 500mA	28 Watts	6.00 Metres	Steel	
Y	9	STREET LIGHTING	HOPE STREET	GRIMSBY	527985.32	409986.85	1985		51008	1 Urbis LED	Axia 16 LED 500mA	28 Watts	6.00 Metres	Galvanised Steel	
Y	10	STREET LIGHTING	HOPE STREET	GRIMSBY	527974.43	409949	1985		51009	1 Urbis LED	Axia 16 LED 500mA	28 Watts	6.00 Metres	Galvanised Steel	
Y	11	STREET LIGHTING	HOPE STREET	GRIMSBY	527910.99	409953.33	1985		51010	1 Urbis LED	Axia 16 LED 500mA	28 Watts	6.00 Metres	Galvanised Steel	
Y	12	STREET LIGHTING	HOPE STREET	GRIMSBY	527938.79	409936.75	2024	06/08/2024	69963	Urbis	Axia 24 LED 500mA	28 Watts	6.00 Metres	Galvanised Steel	
Y	13	STREET LIGHTING	HOPE STREET	GRIMSBY	527944.28	409950.29	1985		51012	1 Urbis LED	Axia 16 LED 500mA	28 Watts	6.00 Metres	Galvanised Steel	
Y	14	STREET LIGHTING	HOPE STREET	GRIMSBY	527972.28	409926.97	1985		51013	1 Urbis LED	Axia 16 LED 500mA	28 Watts	6.00 Metres	Galvanised Steel	
Y	15	STREET LIGHTING	HOPE STREET	GRIMSBY	527989.84	409933.22	1985		51014	Urbis	Axia 16 LED 350mA	19 Watts	6.00 Metres	Galvanised Steel	
Y	16	STREET LIGHTING	HOPE STREET	GRIMSBY	527999.62	409918.87	1985		51015	1 Urbis LED	Axia 16 LED 500mA	28 Watts	6.00 Metres	Galvanised Steel	
Y	1	STREET LIGHTING	FOOTPATH BETWEEN HOPE STREET	GRIMSBY	528050.66	410202.49	1997		48737	Urbis	Axia 8 LED 350mA	10 Watts	5.00 Metres	Galvanised Steel	
Y	2	STREET LIGHTING	FOOTPATH BETWEEN HOPE STREET	GRIMSBY	528038.76	410165.53	2006		48738	Urbis	Axia 8 LED 350mA	10 Watts	6.00 Metres	Galvanised Steel	
Y	1	STREET LIGHTING	KESGRAVE STREET	GRIMSBY	528030.34	410397.85	2006		51568	1 Urbis LED	Axia 16 LED 500mA	28 Watts	6.00 Metres	Stainless Steel	
Y	2	STREET LIGHTING	KESGRAVE STREET	GRIMSBY	528037.08	410429.74	2006		51569	1 Urbis LED	Axia 16 LED 500mA	28 Watts	6.00 Metres	Stainless Steel	
Y	1	STREET LIGHTING	LEVINGTON STREET	GRIMSBY	528147.42	410387.86	2017	30/09/2017	52497	1 Urbis LED	Axia 16 LED 500mA	28 Watts	6.00 Metres	Galvanised Steel	
Y	2	STREET LIGHTING	LEVINGTON STREET	GRIMSBY	528162.59	410416.96	2017	30/09/2017	52498	1 Urbis LED	Axia 16 LED 500mA	28 Watts	6.00 Metres	Galvanised Steel	
Y	1	STREET LIGHTING	MILLOM WAY	GRIMSBY	527919.15	409885.65	2001		53684	1 Urbis LED	Axia 16 LED 500mA	28 Watts	6.00 Metres	Galvanised Steel	
Y	2	STREET LIGHTING	MILLOM WAY	GRIMSBY	527927.99	409864.38	1968		53685	1 Urbis LED	Axia 16 LED 500mA	28 Watts	5.00 Metres	Steel	
Y	3	STREET LIGHTING	MILLOM WAY	GRIMSBY				23/01/2025	70175	Urbis	Axia 16 LED 500mA	28 Watts	6.00 Metres	Galvanised Steel	
Y	4	STREET LIGHTING	MILLOM WAY	GRIMSBY	527961.68	409844.31	1997		53687	1 Urbis LED	Axia 16 LED 500mA	28 Watts	5.00 Metres	Galvanised Steel	
Y	5	STREET LIGHTING	MILLOM WAY	GRIMSBY	527983.41	409846.98	1967		53688	1 Urbis LED	Axia 16 LED 500mA	28 Watts	5.00 Metres	Steel	
Y	6	STREET LIGHTING	MILLOM WAY	GRIMSBY	527973.65	409821.85	2013		53689	Urbis	Axia 8 LED 350mA	10 Watts	6.00 Metres	Steel	
Y	7	STREET LIGHTING	MILLOM WAY	GRIMSBY	527948.06	409828.29	1997		53690	Urbis	Axia 8 LED 350mA	10 Watts	5.00 Metres	Galvanised Steel	
Y	8	STREET LIGHTING	MILLOM WAY	GRIMSBY	527940.7	409804.81	2013		53691	Urbis	Axia 8 LED 350mA	10 Watts	6.00 Metres	Steel	
Y	9	STREET LIGHTING	MILLOM WAY	GRIMSBY	527915.47	409812.18	1997		53692	Urbis	Axia 8 LED 350mA	10 Watts	5.00 Metres	Galvanised Steel	
Y	10	STREET LIGHTING	MILLOM WAY	GRIMSBY	527920.16	409837.52	2005		53693	Urbis	Axia 8 LED 350mA	10 Watts	6.00 Metres	Galvanised Steel	
Y	1	STREET LIGHTING	NACTON STREET	GRIMSBY	527958.53	410424.35	2015	30/07/2015	53919	1 Urbis LED	Axia 16 LED 500mA	28 Watts	6.00 Metres	Galvanised Steel	
Y	2	STREET LIGHTING	NACTON STREET	GRIMSBY	527958.18	410457.65	2015	30/07/2015	53920	1 Urbis LED	Axia 16 LED 500mA	28 Watts	6.00 Metres	Galvanised Steel	
Y	1	STREET LIGHTING	NEWMARKET STREET	GRIMSBY	527598.16	409860.58	2000		54141	1 Urbis LED	Axia 16 LED 500mA	28 Watts	6.00 Metres	Galvanised Steel	
Y	2	STREET LIGHTING	NEWMARKET STREET	GRIMSBY	527591.46	409881.19	2006		54142	1 Urbis LED	Axia 16 LED 500mA	28 Watts	6.00 Metres	Stainless Steel	
Y	3	STREET LIGHTING	NEWMARKET STREET	GRIMSBY	527618.16	409871.34	2000		54143	1 Urbis LED	Axia 16 LED 500mA	28 Watts	6.00 Metres	Galvanised Steel	
Y	4	STREET LIGHTING	NEWMARKET STREET	GRIMSBY	527652.48	409877.65	2000		54144	1 Urbis LED	Axia 16 LED 500mA	28 Watts	6.00 Metres	Galvanised Steel	
Y	5	STREET LIGHTING	NEWMARKET STREET	GRIMSBY	527683.41	409867.55	2000		54145	1 Urbis LED	Axia 16 LED 500mA	28 Watts	6.00 Metres	Galvanised Steel	
Y	1	STREET LIGHTING	ORWELL STREET	GRIMSBY	527757.32	410512.63	2014	15/11/2014	54465	1 Urbis LED	Teceo 24 LED 500mA	40 Watts	6.00 Metres	Galvanised Steel	
Y	2	STREET LIGHTING	ORWELL STREET	GRIMSBY	527787.66	410506.21	2017		54466	1 Urbis LED	Teceo 24 LED 500mA	40 Watts	6.00 Metres	Galvanised Steel	
Y	3	STREET LIGHTING	ORWELL STREET	GRIMSBY	527817.23	410501.09	2007		54467	1 Urbis LED	Teceo 24 LED 500mA	40 Watts	6.00 Metres	Galvanised Steel	
Y	4	STREET LIGHTING	ORWELL STREET	GRIMSBY	527853.14	410493.66	2014	15/11/2014	66902	1 Urbis LED	Teceo 24 LED 500mA	40 Watts	6.00 Metres	Galvanised Steel	
Y	5	STREET LIGHTING	ORWELL STREET	GRIMSBY	527889.37	410474.39	2014		54468	1 Urbis LED	Teceo 24 LED 500mA	40 Watts	6.00 Metres	Galvanised Steel	
Y	6	STREET LIGHTING	ORWELL STREET	GRIMSBY	527926.13	410477.33	1993		54469	1 Urbis LED	Teceo 24 LED 500mA	40 Watts	5.00 Metres	Steel	
Y	7	STREET LIGHTING	ORWELL STREET	GRIMSBY	527964.61	410469.98	2022	25/11/2022	66903	Urbis	Teceo 24 LED 500mA	40 Watts	6.00 Metres	Galvanised Steel	
Y	8	STREET LIGHTING	ORWELL STREET	GRIMSBY	528002.76	410462.24	2017		54470	1 Urbis LED	Teceo 24 LED 500mA	40 Watts	6.00 Metres	Galvanised Steel	
Y	9	STREET LIGHTING	ORWELL STREET	GRIMSBY	528032.09	410444.21	2009		54471	1 Urbis LED	Teceo 24 LED 500mA	40 Watts	6.00 Metres	Galvanised Steel	
Y	10	STREET LIGHTING	ORWELL STREET	GRIMSBY	528079.33	410434.44	2021	28/07/2021	68588	Urbis	Teceo 24 LED 500mA	40 Watts	6.00 Metres	Galvanised Steel	
Y	11	STREET LIGHTING	ORWELL STREET	GRIMSBY	528120.72	410437.55	1993		54473	1 Urbis LED	Teceo 24 LED 500mA	40 Watts	5.00 Metres	Steel	
Y	12	STREET LIGHTING	ORWELL STREET	GRIMSBY	528144.32	410432.52	2017		66904	1 Urbis LED	Teceo 24 LED 500mA	40 Watts	6.00 Metres	Galvanised Steel	
Y	1	STREET LIGHTING	PETCHELL WAY	GRIMSBY	527519.03	409893.6	1968		55349	Urbis	Axia 16 LED 350mA	19 Watts	5.00 Metres	Steel	
Y	2	STREET LIGHTING	PETCHELL WAY	GRIMSBY	527547.76	409890.75	1968		55350	Urbis	Axia 16 LED 350mA	19 Watts	5.00 Metres	Steel	
Y	3	STREET LIGHTING	PETCHELL WAY	GRIMSBY	527567.76	409884.29	2019	18/01/2019	55351	Urbis	Axia 16 LED 350mA	19 Watts	6.00 Metres	Galvanised Steel	
Y	4	STREET LIGHTING	PETCHELL WAY	GRIMSBY	527570.63	409858.75	1968		55352	Urbis	Axia 16 LED 350mA	19 Watts	5.00 Metres	Steel	
Y	5	STREET LIGHTING	PETCHELL WAY	GRIMSBY	527558.73	409832.48	1968		55353	Urbis	Axia 16 LED 350mA	19 Watts	5.00 Metres	Steel	
Y	6	STREET LIGHTING	PETCHELL WAY	GRIMSBY	527563.67	409813.05	1968		55354	Urbis	Axia 16 LED 350mA	19 Watts	5.00 Metres	Steel	
Y	1	STREET LIGHTING	FOOTPATH BETWEEN PETCHELL WAY	GRIMSBY	527532.91	409854.91	1968		48771	Urbis	Axia 16 LED 350mA	19 Watts	5.00 Metres	Steel	
Y	2	STREET LIGHTING	FOOTPATH BETWEEN PETCHELL WAY	GRIMSBY	527533.55	409825.54	1968		48772	Urbis	Axia 16 LED 350mA	19 Watts	5.00 Metres	Steel	
Y	3	STREET LIGHTING	FOOTPATH BETWEEN PETCHELL WAY	GRIMSBY	527533.93	409787.38	1968		48773	Urbis	Axia 16 LED 350mA	19 Watts	5.00 Metres	Steel	
Y	4	STREET LIGHTING	FOOTPATH BETWEEN PETCHELL WAY	GRIMSBY	527555.06	409783.71	1968		48774	Urbis	Axia 16 LED 350mA	19 Watts	5.00 Metres	Steel	
Y	5	STREET LIGHTING	FOOTPATH BETWEEN PETCHELL WAY	GRIMSBY	527585.82	409784.53	1968		48775	Urbis	Axia 16 LED 350mA	19 Watts	5.00 Metres	Steel	
Y	1	STREET LIGHTING	GEORGE JANNEY COURT	GRIMSBY	528066.08	409998.93	1982		49177	Urbis	Axia 16 LED 350mA	19 Watts	5.00 Metres	Galvanised Steel	
Y	2	STREET LIGHTING	GEORGE JANNEY COURT	GRIMSBY	528054.44	410008.11	1982		49178	Urbis	Axia 16 LED 350mA	19 Watts	5.00 Metres	Galvanised Steel	
Y	3	STREET LIGHTING	GEORGE JANNEY COURT	GRIMSBY	528044.06	409998.43	1985		49179	Urbis	Axia 16 LED 350mA	19 Watts	5.00 Metres	Galvanised Steel	
Y	4	STREET LIGHTING	GEORGE JANNEY COURT	GRIMSBY	528050.26	409976.4	1985		49180	Urbis	Axia 16 LED 350mA	19 Watts	5.00 Metres	Galvanised Steel	
Y	5	STREET LIGHTING	GEORGE JANNEY COURT	GRIMSBY	528034.94	409967.48	1985		49181	Urbis	Axia 16 LED 350mA	19 Watts	5.00 Metres	Galvanised Steel	
Y	6	STREET LIGHTING	GEORGE JANNEY COURT	GRIMSBY	528006.34	409977.48	1985		49182	Urbis	Axia 16 LED 350mA	19 Watts	5.00 Metres	Galvanised Steel	
Y	1	STREET LIGHTING	WEBSTER WAY	GRIMSBY	527971.98	410003.97	1975		59922	Urbis	Axia 16 LED 350mA	19 Watts	5.00 Metres	Galvanised Steel	
Y	2	STREET LIGHTING	WEBSTER WAY	GRIMSBY	527952.36	409997.14	1975		59923	Urbis	Axia 16 LED 350mA	19 Watts	5.00 Metres	Galvanised Steel	
Y	3	STREET LIGHTING	WEBSTER WAY	GRIMSBY	527966.54	409984.86	1975		59924	1 Urbis LED	Axia 16 LED 500mA	28 Watts	5.00 Metres	Galvanised Steel	
Y	1	STREET LIGHTING	WILLING WAY	GRIMSBY	527986.52	409801.75	2003		60697	Urbis	Axia 8 LED 350mA	10 Watts	6.00 Metres	Galvanised Steel	
Y	2	STREET LIGHTING	WILLING WAY	GRIMSBY	527967.56	409794.93	1980		60698	Urbis	Axia 16 LED 350mA	19 Watts	6.00 Metres	Galvanised Steel	
Y	3	STREET LIGHTING	WILLING WAY	GRIMSBY	527994.99	409779.93	2013		60699	Urbis	Axia 8 LED 350mA	10 Watts	6.00 Metres	Steel	
Y	4	STREET LIGHTING	WILLING WAY	GRIMSBY	527980.81	409773.3	2008		60700	Urbis	Axia 8 LED 350mA	10 Watts	6.00 Metres	Steel	
Y	5	STREET LIGHTING	WILLING WAY	GRIMSBY	527962.22	409777.35	1980		60701	Urbis	Axia 16 LED 350mA	19 Watts	6.00 Metres	Galvanised Steel	
Y	6	STREET LIGHTING	WILLING WAY	GRIMSBY	527987.62	409757.93	2013		60702	Urbis	Axia 8 LED 350mA	10 Watts	6.00 Metres	Steel	
Y	7	STREET LIGHTING	WILLING WAY	GRIMSBY	527973.63	409754.24	2016	15/03/2016	60703	Urbis	Axia 16 LED 350mA	19 Watts	6.00 Metres	Galvanised Steel	
Y	8	STREET LIGHTING	WILLING WAY	GRIMSBY	527950.62	409743.47	1980		60704	Urbis	Axia 16 LED 350mA	19 Watts	6.00 Metres	Galvanised Steel	
Y	9	STREET LIGHTING	WILLING WAY	GRIMSBY	527964.61	409731.5	2016	15/03/2016	60705	Urbis	Axia 16 LED 350mA	19 Watts	6.00 Metres	Galvanised Steel	
Y	10	STREET LIGHTING	WILLING WAY	GRIMSBY	527942.88	409717.24	1980		60706	Urbis	Axia 16 LED 350mA	19 Watts	6.00 Metres	Galvanised Steel	
Y	11	STREET LIGHTING	WILLING WAY	GRIMSBY	527959.45	409707.11	1980		60707	Urbis	Axia 16 LED 350mA	19 Watts	6.00 Metres	Galvanised Steel	
Y	1	STREET LIGHTING	RAILWAY STREET	GRIMSBY	527554.2	410434.15	2014	10/11/2014	55886	1 Urbis LED	Teceo 40 LED 500mA	64 Watts	8.00 Metres	Galvanised Steel	
Y	2	STREET LIGHTING	RAILWAY STREET	GRIMSBY	527560.83	410417.31	1985		55887	1 Urbis LED	Teceo 40 LED 500mA	64 Watts	8.00 Metres	Steel	
Y	3	STREET LIGHTING	RAILWAY STREET	GRIMSBY	527543.52	410391.62	1946	01/01/1985	55888	1 Urbis LED	Teceo 40 LED 500mA	64 Watts	8.00 Metres	Steel	
Y	4	STREET LIGHTING	RAILWAY STREET	GRIMSBY	527538.73	410358.02	1946	01/01/1985	55889	1 Urbis LED	Teceo 40 LED 500mA	64 Watts	8.00 Metres	Steel	
Y	5	STREET LIGHTING	RAILWAY STREET	GRIMSBY	527537.45	410327.36	1946	01/01/1985	55890	1 Urbis LED	Teceo 40 LED 500mA	64 Watts	8.00 Metres	Steel	
Y	6	STREET LIGHTING	RAILWAY STREET	GRIMSBY	527544.26	410293.21	1946	01/01/1985	55891	1 Urbis LED	Teceo 40 LED 500mA	64 Watts	8.00 Metres	Steel	
Y	7	STREET LIGHTING	RAILWAY STREET	GRIMSBY	527530.08	410263.66	1946	01/01/1985	55892	1 Urbis LED	Teceo 40 LED 500mA	64 Watts	8.00 Metres	Steel	
Y	8	STREET LIGHTING	RAILWAY STREET	GRIMSBY	527536.9	410228.58	2010		55893	1 Urbis LED	Teceo 40 LED 500mA	64 Watts	8.00 Metres	Galvanised Steel	
Y	9	STREET LIGHTING	RAILWAY STREET	GRIMSBY	527522.17	410189.64	1946	01/01/1985	55894	1 Urbis LED	Teceo 40 LED 500mA	64 Watts	8.00 Metres	Steel	
Y	10	STREET LIGHTING	RAILWAY STREET	GRIMSBY	527532.72	410152.67	2000		55895	1 Urbis LED	Teceo 40 LED 500mA	64 Watts	8.00 Metres	Galvanised Steel	
Y	11	STREET LIGHTING	RAILWAY STREET	GRIMSBY	527517.2	410125.2	1946	01/01/1985	55896	Urbis	AXIA 3.2 32 LED 630 mA	62 Watts	8.00 Metres	Steel	
Y	12	STREET LIGHTING	RAILWAY STREET	GRIMSBY	527524.56	410091.04	1946	01/01/1985	55897	1 Urbis LED	Teceo 40 LED 500mA	64 Watts	8.00 Metres	Steel	
Y	13	STREET LIGHTING	RAILWAY STREET	GRIMSBY	527521.62	410063.15	1946	01/01/1985	55898	1 Urbis LED	Teceo 40 LED 500mA	64 Watts	8.00 Metres	Steel	
Y	14	STREET LIGHTING	RAILWAY STREET	GRIMSBY	527506.7	410038.75	1946	01/01/1985	55899	1 Urbis LED	Teceo 40 LED 500mA	64 Watts	8.00 Metres	Steel	
Y	15	STREET LIGHTING	RAILWAY STREET	GRIMSBY	527515.91	410006.99	2010		55900	1 Urbis LED	Teceo 40 LED 500mA	64 Watts	8.00 Metres	Steel	
Y	16	STREET LIGHTING	RAILWAY STREET	GRIMSBY	527498.97	409972.29	1946	01/01/1985	55901	1 Urbis LED	Teceo 40 LED 500mA	64 Watts	8.00 Metres	Steel	
Y	17	STREET LIGHTING	RAILWAY STREET	GRIMSBY	527511	409940	2005		55902	Urbis	AXIA 3.2 32 LED 630 mA	62 Watts	8.00 Metres	Stainless Steel	
Y	18	STREET LIGHTING	RAILWAY STREET	GRIMSBY	527492.86	409902.87	2023	27/01/2023	69211	Urbis	Teceo 24 LED 500mA	40 Watts	12.00 Metres	Galvanised Steel	
Y	19	STREET LIGHTING	RAILWAY STREET	GRIMSBY	527504.13	409864.85	1965		55904	1 Urbis LED	Teceo 40 LED 500mA	64 Watts	8.00 Metres	Galvanised Steel	
Y	20	STREET LIGHTING	RAILWAY STREET	GRIMSBY	527485.16	409833.46	1946	01/01/1985	55905	1 Urbis LED	Teceo 40 LED 500mA	64 Watts	8.00 Metres	Steel	

Y	21	STREET LIGHTING	RAILWAY STREET	GRIMSBY	527485.35	409801.7	1946	01/01/1985	55906	1 Urbis LED	Teceo 40 LED 500mA	64 Watts	8.00 Metres	Steel	
Y	22	STREET LIGHTING	RAILWAY STREET	GRIMSBY	527491.61	409777.12	1996		55907	1 Urbis LED	Teceo 40 LED 500mA	64 Watts	10.00 Metres	Galvanised Steel	
Y	1	STREET LIGHTING	RIBY SQUARE	GRIMSBY	527709.33	410469.2	1994		56071	1 Urbis LED	Teceo 48 LED 500mA	79 Watts	12.00 Metres	Galvanised Steel	
Y	2	STREET LIGHTING	RIBY SQUARE	GRIMSBY	527731.48	410477.3	1994		56072	1 Urbis LED	Teceo 48 LED 500mA	79 Watts	12.00 Metres	Galvanised Steel	
Y	3	STREET LIGHTING	RIBY SQUARE	GRIMSBY	527739.33	410498.95	1994		56073	1 Urbis LED	Teceo 48 LED 500mA	79 Watts	10.00 Metres	Steel	
Y	4	STREET LIGHTING	RIBY SQUARE	GRIMSBY	527736.77	410525.62	1994		56074	1 Urbis LED	Teceo 48 LED 500mA	79 Watts	10.00 Metres	Galvanised Steel	
Y	5	STREET LIGHTING	RIBY SQUARE	GRIMSBY	527767.28	410552.27	1994		56075	1 Urbis LED	Teceo 48 LED 500mA	79 Watts	10.00 Metres	Galvanised Steel	
Y	1	STREET LIGHTING	RIBY STREET	GRIMSBY	527800.9	410533.51	1988		56076	1 Urbis LED	Teceo 48 LED 500mA	79 Watts	10.00 Metres	Galvanised Steel	
Y	2	STREET LIGHTING	RIBY STREET	GRIMSBY	527841.21	410524.7	1988		56077	1 Urbis LED	Teceo 48 LED 500mA	79 Watts	10.00 Metres	Galvanised Steel	
Y	3	STREET LIGHTING	RIBY STREET	GRIMSBY	527879.69	410516.7	1988		56078	1 Urbis LED	Teceo 48 LED 500mA	79 Watts	10.00 Metres	Galvanised Steel	
Y	4	STREET LIGHTING	RIBY STREET	GRIMSBY	527919.28	410520.94	2021	25/02/2021	68275	Urbis	Teceo 48 LED 500mA	79 Watts	8.00 Metres	Galvanised Steel	
Y	5	STREET LIGHTING	RIBY STREET	GRIMSBY	527960.4	410499.53	1988		56080	1 Urbis LED	Teceo 48 LED 500mA	79 Watts	10.00 Metres	Galvanised Steel	
Y	6	STREET LIGHTING	RIBY STREET	GRIMSBY	527998.62	410491.68	1988		56081	1 Urbis LED	Teceo 48 LED 500mA	79 Watts	10.00 Metres	Galvanised Steel	
Y	7	STREET LIGHTING	RIBY STREET	GRIMSBY	528037.31	410483.88	1988		56082	1 Urbis LED	Teceo 48 LED 500mA	79 Watts	10.00 Metres	Galvanised Steel	
Y	8	STREET LIGHTING	RIBY STREET	GRIMSBY	528080.45	410474.67	1988		56083	1 Urbis LED	Teceo 48 LED 500mA	79 Watts	10.00 Metres	Galvanised Steel	
Y	9	STREET LIGHTING	RIBY STREET	GRIMSBY	528116.04	410467.01	1988		56084	1 Urbis LED	Teceo 48 LED 500mA	79 Watts	10.00 Metres	Galvanised Steel	
Y	10	STREET LIGHTING	RIBY STREET	GRIMSBY	528156.68	410458.47	1988		56085	1 Urbis LED	Teceo 48 LED 500mA	79 Watts	10.00 Metres	Galvanised Steel	
Y	11	STREET LIGHTING	RIBY STREET	GRIMSBY	528197.18	410450.81	1988		56086	1 Urbis LED	Teceo 48 LED 500mA	79 Watts	10.00 Metres	Galvanised Steel	
Y	12	STREET LIGHTING	RIBY STREET	GRIMSBY	528218.32	410446.06	1988		56087	1 Urbis LED	Teceo 48 LED 500mA	79 Watts	10.00 Metres	Galvanised Steel	
Y	1	STREET LIGHTING	ROWLANDSON STREET	GRIMSBY	527725.16	410517.61	1956		61895	1 Urbis LED	Teceo 40 LED 500mA	64 Watts	10.00 Metres	Steel	
Y	1	STREET LIGHTING	ROWLANDSON STREET	GRIMSBY	527725.16	410517.61	1956		62429	1 Urbis LED	Teceo 40 LED 500mA	64 Watts	10.00 Metres	Steel	
Y	2	STREET LIGHTING	ROWLANDSON STREET	GRIMSBY	527703.69	410542.83	1956		56357	1 Urbis LED	Teceo 40 LED 500mA	64 Watts	10.00 Metres	Steel	
Y	3	STREET LIGHTING	ROWLANDSON STREET	GRIMSBY	527689.72	410527.82	2012		56358	1 Urbis LED	Teceo 40 LED 500mA	64 Watts	10.00 Metres	Steel	
Y	4	STREET LIGHTING	ROWLANDSON STREET	GRIMSBY	527671.69	410556.19	2005		61896	1 Urbis LED	Teceo 40 LED 500mA	64 Watts	10.00 Metres	Stainless Steel	
Y	4	STREET LIGHTING	ROWLANDSON STREET	GRIMSBY	527671.69	410556.19	2005		62430	1 Urbis LED	Teceo 40 LED 500mA	64 Watts	10.00 Metres	Stainless Steel	
Y	1	STREET LIGHTING	ROBINSON STREET EAST	GRIMSBY	527317.68	409432.08	1999		56204	1 Urbis LED	Teceo 24 LED 500mA	40 Watts	6.00 Metres	Galvanised Steel	
Y	2	STREET LIGHTING	ROBINSON STREET EAST	GRIMSBY	527331.67	409458.13	1999		56205	1 Urbis LED	Teceo 24 LED 500mA	40 Watts	6.00 Metres	Galvanised Steel	
Y	3	STREET LIGHTING	ROBINSON STREET EAST	GRIMSBY	527324.7	409476.36	2018	17/08/2018	67054	Urbis	Axia 16 LED 500mA	28 Watts	6.00 Metres	Galvanised Steel	
Y	4	STREET LIGHTING	ROBINSON STREET EAST	GRIMSBY	527334.33	409498.98	2018	17/08/2018	67055	Urbis	Axia 16 LED 500mA	28 Watts	6.00 Metres	Galvanised Steel	
Y	5	STREET LIGHTING	ROBINSON STREET EAST	GRIMSBY	527346.17	409529.46	1999		56208	1 Urbis LED	Teceo 24 LED 500mA	40 Watts	6.00 Metres	Galvanised Steel	
Y	1	STREET LIGHTING	STRAND STREET	GRIMSBY	527718.14	410412	2015	18/02/2015	58510	1 Urbis LED	Teceo 16 LED 500mA	28 Watts	6.00 Metres	Galvanised Steel	
Y	2	STREET LIGHTING	STRAND STREET	GRIMSBY	527736.37	410407.95	1988		58511	1 Urbis LED	Teceo 16 LED 500mA	28 Watts	6.00 Metres	Galvanised Steel	
Y	3	STREET LIGHTING	STRAND STREET	GRIMSBY	527766.38	410391.75	1988		58512	1 Urbis LED	Teceo 16 LED 500mA	28 Watts	6.00 Metres	Galvanised Steel	
Y	4	STREET LIGHTING	STRAND STREET	GRIMSBY	527801.55	410385.03	1988		58513	1 Urbis LED	Teceo 16 LED 500mA	28 Watts	6.00 Metres	Galvanised Steel	
Y	5	STREET LIGHTING	STRAND STREET	GRIMSBY	527831.01	410378.86	1988		58514	1 Urbis LED	Teceo 16 LED 500mA	28 Watts	6.00 Metres	Galvanised Steel	
Y	6	STREET LIGHTING	STRAND STREET	GRIMSBY	527866.54	410371.68	1988		58515	1 Urbis LED	Teceo 16 LED 500mA	28 Watts	6.00 Metres	Galvanised Steel	
Y	7	STREET LIGHTING	STRAND STREET	GRIMSBY	527900.6	410364.41	1988		58516	1 Urbis LED	Teceo 16 LED 500mA	28 Watts	6.00 Metres	Galvanised Steel	
Y	8	STREET LIGHTING	STRAND STREET	GRIMSBY	527935.77	410356.77	1988		58517	1 Urbis LED	Teceo 16 LED 500mA	28 Watts	6.00 Metres	Galvanised Steel	
Y	9	STREET LIGHTING	STRAND STREET	GRIMSBY	527962.65	410360	1988		58518	1 Urbis LED	Teceo 16 LED 500mA	28 Watts	6.00 Metres	Galvanised Steel	
Y	10	STREET LIGHTING	STRAND STREET	GRIMSBY	527980.88	410347.2	1988		58519	1 Urbis LED	Teceo 16 LED 500mA	28 Watts	6.00 Metres	Galvanised Steel	
Y	11	STREET LIGHTING	STRAND STREET	GRIMSBY	528004.08	410341.86	1988		58520	1 Urbis LED	Teceo 16 LED 500mA	28 Watts	6.00 Metres	Galvanised Steel	
Y	1	STREET LIGHTING	TOMLINE STREET	GRIMSBY	527838.09	410447.66	2003		59280	1 Urbis LED	Teceo 16 LED 500mA	28 Watts	5.00 Metres	Stainless Steel	
Y	2	STREET LIGHTING	TOMLINE STREET	GRIMSBY	527853.51	410477.86	2017	13/09/2017	68499	Urbis	Teceo 16 LED 500mA	25 Watts	6.00 Metres	Galvanised Steel	
Y	1	STREET LIGHTING	WOOD STREET	GRIMSBY	527594.47	409831.4	2000		61091	1 Urbis LED	Teceo 24 LED 500mA	40 Watts	6.00 Metres	Galvanised Steel	
Y	2	STREET LIGHTING	WOOD STREET	GRIMSBY	527584.56	409814.71	2000		61092	1 Urbis LED	Teceo 24 LED 500mA	40 Watts	6.00 Metres	Galvanised Steel	
Y	3	STREET LIGHTING	WOOD STREET	GRIMSBY	527609.47	409807.19	2000		61093	1 Urbis LED	Teceo 24 LED 500mA	40 Watts	6.00 Metres	Galvanised Steel	
Y	4	STREET LIGHTING	WOOD STREET	GRIMSBY	527643.44	409803.3	2000		61094	1 Urbis LED	Teceo 24 LED 500mA	40 Watts	6.00 Metres	Galvanised Steel	
Y	5	STREET LIGHTING	WOOD STREET	GRIMSBY	527674.15	409805.65	2000		61095	1 Urbis LED	Teceo 24 LED 500mA	40 Watts	6.00 Metres	Galvanised Steel	
Y	1	STREET LIGHTING	WERNETH ROAD	GRIMSBY	527703.14	409748.86	2003		60278	1 Urbis LED	Teceo 32 LED 500mA	52 Watts	6.00 Metres	Stainless Steel	
Y	2	STREET LIGHTING	WERNETH ROAD	GRIMSBY	527706.61	409785.91	2003		60279	1 Urbis LED	Teceo 32 LED 500mA	52 Watts	6.00 Metres	Stainless Steel	
Y	3	STREET LIGHTING	WERNETH ROAD	GRIMSBY	527697.4	409817.66	2003		60280	1 Urbis LED	Teceo 32 LED 500mA	52 Watts	6.00 Metres	Stainless Steel	
Y	4	STREET LIGHTING	WERNETH ROAD	GRIMSBY	527716.68	409852.53	2003		60281	1 Urbis LED	Teceo 32 LED 500mA	52 Watts	6.00 Metres	Stainless Steel	
Y	5	STREET LIGHTING	WERNETH ROAD	GRIMSBY	527706.83	409887.32	2003		60282	1 Urbis LED	Teceo 32 LED 500mA	52 Watts	6.00 Metres	Stainless Steel	
Y	6	STREET LIGHTING	WERNETH ROAD	GRIMSBY	527725.53	409921.67	2003		60283	1 Urbis LED	Teceo 32 LED 500mA	52 Watts	6.00 Metres	Stainless Steel	
Y	1	STREET LIGHTING	BODIAM WAY GARAGES	GRIMSBY	527740	409759	1967		44363	1 Urbis LED	Axia 16 LED 500mA	28 Watts	5.00 Metres	Aluminium	
Y	1	STREET LIGHTING	BODIAM WAY	GRIMSBY	527717.49	409789.52	2008		44357	1 Urbis LED	Axia 16 LED 500mA	28 Watts	6.00 Metres	Steel	
Y	2	STREET LIGHTING	BODIAM WAY	GRIMSBY	527747.99	409786.02	2008		44358	1 Urbis LED	Axia 16 LED 500mA	28 Watts	6.00 Metres	Steel	
Y	3	STREET LIGHTING	BODIAM WAY	GRIMSBY	527776.11	409787.1	2008		44359	1 Urbis LED	Axia 16 LED 500mA	28 Watts	6.00 Metres	Steel	
Y	4	STREET LIGHTING	BODIAM WAY	GRIMSBY	527806.29	409778.97	2008		44360	1 Urbis LED	Axia 16 LED 500mA	28 Watts	6.00 Metres	Steel	
Y	5	STREET LIGHTING	BODIAM WAY	GRIMSBY	527796	409756	1967		44361	1 Urbis LED	Axia 16 LED 500mA	28 Watts	5.00 Metres	Aluminium	
Y	1	STREET LIGHTING	FREEMAN STREET	GRIMSBY	527712.76	410428.41	1991		48980	1 Urbis LED	Teceo 48 LED 700mA	104 Watts	12.00 Metres	Galvanised Steel	
Y	2	STREET LIGHTING	FREEMAN STREET	GRIMSBY	527693.56	410395.15	1991		48981	1 Urbis LED	Teceo 48 LED 500mA	79 Watts	10.00 Metres	Steel	
Y	3	STREET LIGHTING	FREEMAN STREET	GRIMSBY	527693.2	410368.18	1991		48982	1 Urbis LED	Teceo 48 LED 500mA	79 Watts	10.00 Metres	Steel	
Y	4	STREET LIGHTING	FREEMAN STREET	GRIMSBY	527686.38	410330.25	1991		48983	1 Urbis LED	Teceo 48 LED 500mA	79 Watts	10.00 Metres	Steel	
Y	5	STREET LIGHTING	FREEMAN STREET	GRIMSBY	527695.04	410292.05	1991		48984	1 Urbis LED	Teceo 48 LED 500mA	79 Watts	10.00 Metres	Steel	
Y	6	STREET LIGHTING	FREEMAN STREET	GRIMSBY	527691.13	410258.38	1991		48985	1 Urbis LED	Teceo 48 LED 500mA	79 Watts	10.00 Metres	Steel	
Y	7	STREET LIGHTING	FREEMAN STREET	GRIMSBY	527688.3	410218.72	1991		48986	1 Urbis LED	Teceo 48 LED 500mA	79 Watts	10.00 Metres	Steel	
Y	8	STREET LIGHTING	FREEMAN STREET	GRIMSBY	527669.9	410195.73	1991		48987	1 Urbis LED	Teceo 48 LED 500mA	79 Watts	10.00 Metres	Steel	
Y	9	STREET LIGHTING	FREEMAN STREET	GRIMSBY	527679.65	410162.68	1991		48988	1 Urbis LED	Teceo 48 LED 500mA	79 Watts	10.00 Metres	Steel	
Y	11	STREET LIGHTING	FREEMAN STREET	GRIMSBY	527672.4	410117.42	2013		66345	1 Urbis LED	Teceo 48 LED 500mA	79 Watts	8.00 Metres	Steel	
Y	12	STREET LIGHTING	FREEMAN STREET	GRIMSBY	527661.36	410118.42	2013		66346	1 Urbis LED	Teceo 48 LED 500mA	79 Watts	8.00 Metres	Steel	
Y	13	STREET LIGHTING	FREEMAN STREET	GRIMSBY	527668.06	410083.96	2013		66337	1 Urbis LED	Teceo 48 LED 500mA	79 Watts	8.00 Metres	Steel	
Y	14	STREET LIGHTING	FREEMAN STREET	GRIMSBY	527657.38	410085.07	2013		66347	1 Urbis LED	Teceo 48 LED 500mA	79 Watts	8.00 Metres	Steel	
Y	15	STREET LIGHTING	FREEMAN STREET	GRIMSBY	527664.74	410059.01	2013		66348	1 Urbis LED	Teceo 48 LED 500mA	79 Watts	8.00 Metres	Steel	
Y	16	STREET LIGHTING	FREEMAN STREET	GRIMSBY	527654.06	410059.94	2013		66349	1 Urbis LED	Teceo 48 LED 500mA	79 Watts	8.00 Metres	Steel	
Y	17	STREET LIGHTING	FREEMAN STREET	GRIMSBY	527661.24	410031.3	2013		66338	1 Urbis LED	Teceo 48 LED 500mA	79 Watts	8.00 Metres	Steel	
Y	18	STREET LIGHTING	FREEMAN STREET	GRIMSBY	527650.38	410032.23	2013		66350	1 Urbis LED	Teceo 48 LED 500mA	79 Watts	8.00 Metres	Steel	
Y	19	STREET LIGHTING	FREEMAN STREET	GRIMSBY	527657.95	410006.63	2013		66339	1 Urbis LED	Teceo 48 LED 500mA	79 Watts	8.00 Metres	Steel	
Y	20	STREET LIGHTING	FREEMAN STREET	GRIMSBY	527647.33	410007.54	2013		66340	1 Urbis LED	Teceo 48 LED 500mA	79 Watts	8.00 Metres	Steel	
Y	21	STREET LIGHTING	FREEMAN STREET	GRIMSBY	527643.2	409987.71	2013		66351	1 Urbis LED	Teceo 48 LED 500mA	79 Watts	8.00 Metres	Steel	
Y	22	STREET LIGHTING	FREEMAN STREET	GRIMSBY	527653.47	409957.79	2013		66352	1 Urbis LED	Teceo 48 LED 500mA	79 Watts	8.00 Metres	Steel	
Y	23	STREET LIGHTING	FREEMAN STREET	GRIMSBY	527635.65	409928.97	2013		66353	1 Urbis LED	Teceo 48 LED 500mA	79 Watts	8.00 Metres	Steel	
Y	24	STREET LIGHTING	FREEMAN STREET	GRIMSBY	527630.82	409891.89	2013		66354	1 Urbis LED	Teceo 48 LED 500mA	79 Watts	8.00 Metres	Steel	
Y	25	STREET LIGHTING	FREEMAN STREET	GRIMSBY	527640.44	409855.69	2013		66355	1 Urbis LED	Teceo 48 LED 500mA	79 Watts	8.00 Metres	Steel	
Y	26	STREET LIGHTING	FREEMAN STREET	GRIMSBY	527621.84	409821.63	2013		66356	1 Urbis LED	Teceo 48 LED 500mA	79 Watts	8.00 Metres	Steel	
Y	27	STREET LIGHTING	FREEMAN STREET	GRIMSBY	527631.42	409784.72	2013		66357	1 Urbis LED	Teceo 48 LED 500mA	79 Watts	8.00 Metres	Steel	
Y	28	STREET LIGHTING	FREEMAN STREET	GRIMSBY	527611.06	409740.6	2013		66342	1 Urbis LED	Teceo 48 LED 500mA	79 Watts	8.00 Metres	Steel	
Y	29	STREET LIGHTING	FREEMAN STREET	GRIMSBY	527624.09	409739.77	2013		66341	1 Urbis LED	Teceo 48 LED 500mA	79 Watts	8.00 Metres	Steel	
Y	30	STREET LIGHTING	FREEMAN STREET	GRIMSBY	527608.03	409716.68	2013		66358	1 Urbis LED	Teceo 48 LED 500mA	79 Watts	8.00 Metres	Steel	
Y	31	STREET LIGHTING	FREEMAN STREET	GRIMSBY	527618.35	409680.32	2013		66359	1 Urbis LED	Teceo 48 LED 500mA	79 Watts	8.00 Metres	Steel	
Y	32	STREET LIGHTING	FREEMAN STREET	GRIMSBY	527598.65	409643.4	2013		66360	1 Urbis LED	Teceo 48 LED 500mA	79 Watts	8.00 Metres	Steel	
Y	33	STREET LIGHTING	FREEMAN STREET	GRIMSBY	527592.89	409600.59	2013		66361	1 Urbis LED	Teceo 48 LED 500mA	79 Watts	8.00 Metres	Steel	
Y	34	STREET LIGHTING	FREEMAN STREET	GRIMSBY	527590.41	409585.03	2022	11/01/2022	66343	1 Urbis LED	Teceo 48 LED 500mA	79 Watts	8.00 Metres	Steel	
Y	35	STREET LIGHTING	FREEMAN STREET	GRIMSBY	527605.75	409583.54	2013		66344	1 Urbis LED	Teceo 48 LED 500mA	79 Watts	8.00 Metres	Steel	
Y	1	STREET LIGHTING	FREEMAN STREET FOOTPATH	GRIMSBY	527701.38	410253.45	1991		61596	Sugg		70 Watts	4.00 Metres	Steel	
Y	1	STREET LIGHTING	FREEMAN STREET FOOTPATH	GRIMSBY	527701.38	410253.45	1991		62128	Sugg		70 Watts	4.00 Metres	Steel	
Y	2	STREET LIGHTING	FREEMAN STREET FOOTPATH	GRIMSBY	527694.92	410254.21	1991		61597	Sugg		70 Watts	4.00 Metres	Steel	
Y	2	STREET LIGHTING	FREEMAN STREET FOOTPATH	GRIMSBY	527694.92	410254.21	1991		62129	Sugg		70 Watts	4.00 Metres	Steel	
Y	3	STREET LIGHTING	FREEMAN STREET FOOTPATH	GRIMSBY	527699.91	410239.36	1991		61598	Sugg		70 Watts	4.00 Metres	Steel	
Y	3	STREET LIGHTING	FREEMAN STREET FOOTPATH	GRIMSBY	527699.91	410239.36	1991		62130	Sugg		70 Watts	4.00 Metres	Steel	
Y	4	STREET LIGHTING	FREEMAN STREET FOOTPATH	GRIMSBY	527693.28	410240.1	1991		61599	Sugg		70 Watts	4.00 Metres	Steel	
Y	4	STREET LIGHTING	FREEMAN STREET FOOTPATH	GRIMSBY	527693.28	410240.1	1991		62131	Sugg		70 Watts	4.00 Metres	Steel	
Y	5	STREET LIGHTING	FREEMAN STREET FOOTPATH	GRIMSBY	527698.07	410226.75	1991		61600	Sugg		70 Watts	4.00 Metres	Steel	
Y	5	STREET LIGHTING	FREEMAN STREET FOOTPATH	GRIMSBY	527698.07	410226.75	1991		62132	Sugg		70 Watts	4.00 Metres	Steel	
Y	6	STREET LIGHTING	FREEMAN STREET FOOTPATH	GRIMSBY	527691.81	410227.49	1991		61601	Sugg		70 Watts	4.00 Metres	Steel	
Y	6	STREET LIGHTING	FREEMAN STREET FOOTPATH	GRIMSBY	527691.81	410227.49	1991		62133	Sugg		70 Watts	4.00 Metres	Steel	
Y	7	STREET LIGHTING	FREEMAN STREET FOOTPATH	GRIMSBY	527675.05	410228.41	1991		61602	Sugg		70 Watts	4.00 Metres	Steel	
Y	7	STREET LIGHTING	FREEMAN STREET FOOTPATH	GRIMSBY	527675.05	410228.41	1991		62134	Sugg		70 Watts	4.00 Metres	Steel	
Y	8	STREET LIGHTING	FREEMAN STREET FOOTPATH	GRIMSBY	527688.12	410211.01	1991		61603	Sugg		70 Watts	4.00 Metres	Steel	
Y	8	STREET LIGHTING	FREEMAN STREET FOOTPATH	GRIMSBY	527688.12	410211.01	1991		62135	Sugg		70 Watts	4.00 Metres	Steel	

Y	9	STREET LIGHTING	FREEMAN STREET FOOTPATH	GRIMSBY	527672.66	410208.25	1991		61604	Sugg		70 Watts	4.00 Metres	Steel	
Y	9	STREET LIGHTING	FREEMAN STREET FOOTPATH	GRIMSBY	527672.66	410208.25	1991		62136	Sugg		70 Watts	4.00 Metres	Steel	
Y	10	STREET LIGHTING	FREEMAN STREET FOOTPATH	GRIMSBY	527662.7	410141.97	1991		61605	Sugg		70 Watts	4.00 Metres	Steel	
Y	10	STREET LIGHTING	FREEMAN STREET FOOTPATH	GRIMSBY	527663.49	410143.32	1991		62137	Sugg		70 Watts	4.00 Metres	Steel	
Y	11	STREET LIGHTING	FREEMAN STREET FOOTPATH	GRIMSBY	527661.1	410133.47	1991		61606	Sugg		70 Watts	4.00 Metres	Steel	
Y	11	STREET LIGHTING	FREEMAN STREET FOOTPATH	GRIMSBY	527660.91	410132.4	1991		62138	Sugg		70 Watts	4.00 Metres	Steel	
Y	12	STREET LIGHTING	FREEMAN STREET FOOTPATH	GRIMSBY	527668.16	410085.48	1991		61607	Sugg		70 Watts	4.00 Metres	Steel	
Y	12	STREET LIGHTING	FREEMAN STREET FOOTPATH	GRIMSBY	527668.6	410084.87	1991		62139	Sugg		70 Watts	4.00 Metres	Steel	
Y	13	STREET LIGHTING	FREEMAN STREET FOOTPATH	GRIMSBY	527657.8	410088.63	1991		61608	Sugg		70 Watts	4.00 Metres	Steel	
Y	13	STREET LIGHTING	FREEMAN STREET FOOTPATH	GRIMSBY	527658.03	410089	1991		62140	Sugg		70 Watts	4.00 Metres	Steel	
Y	14	STREET LIGHTING	FREEMAN STREET FOOTPATH	GRIMSBY	527664.16	410055.96	1991		61609	Sugg		70 Watts	4.00 Metres	Steel	
Y	14	STREET LIGHTING	FREEMAN STREET FOOTPATH	GRIMSBY	527665.02	410055.24	1991		62141	Sugg		70 Watts	4.00 Metres	Steel	
Y	15	STREET LIGHTING	FREEMAN STREET FOOTPATH	GRIMSBY	527653.57	410057.36	1991		61610	Sugg		70 Watts	4.00 Metres	Steel	
Y	15	STREET LIGHTING	FREEMAN STREET FOOTPATH	GRIMSBY	527653.09	410055.48	1991		62142	Sugg		70 Watts	4.00 Metres	Steel	
Y	16	STREET LIGHTING	FREEMAN STREET FOOTPATH	GRIMSBY	527660.04	410028.99	1991		61611	Sugg		70 Watts	4.00 Metres	Steel	
Y	16	STREET LIGHTING	FREEMAN STREET FOOTPATH	GRIMSBY	527659.95	410028.11	1991		62143	Sugg		70 Watts	4.00 Metres	Steel	
Y	17	STREET LIGHTING	FREEMAN STREET FOOTPATH	GRIMSBY	527650.3	410030.84	1991		61612	Sugg		70 Watts	4.00 Metres	Steel	
Y	17	STREET LIGHTING	FREEMAN STREET FOOTPATH	GRIMSBY	527650.22	410029.94	1991		62144	Sugg		70 Watts	4.00 Metres	Steel	
Y	1	STREET LIGHTING	ALBERT PLACE	GRIMSBY	527788.31	410259.34	2013		42837	Urbis	Axia 8 LED 350mA	10 Watts	6.00 Metres	Galvanised Steel	
Y	2	STREET LIGHTING	ALBERT PLACE	GRIMSBY	527812.83	410251.11	2013		42838	1 Urbis LED	Axia 16 LED 500mA	28 Watts	6.00 Metres	Galvanised Steel	
Y	3	STREET LIGHTING	ALBERT PLACE	GRIMSBY	527835.02	410271.88	2006		42839	Urbis	Axia 8 LED 350mA	10 Watts	6.00 Metres	Galvanised Steel	
Y	4	STREET LIGHTING	ALBERT PLACE	GRIMSBY	527831.56	410245.95	2013		42840	1 Urbis LED	Axia 16 LED 500mA	28 Watts	6.00 Metres	Galvanised Steel	
Y	5	STREET LIGHTING	ALBERT PLACE	GRIMSBY	527830.58	410202.45	2009		42841	Urbis	Teceo 24 LED 500mA	40 Watts	6.00 Metres	Galvanised Steel	
Y	6	STREET LIGHTING	ALBERT PLACE	GRIMSBY	527841.52	410163.67	2011		42842	Urbis	Axia 16 LED 500mA	28 Watts	6.00 Metres	Steel	
Y	7	STREET LIGHTING	ALBERT PLACE	GRIMSBY	527813.54	410179.31	2011		42843	1 Urbis LED	Axia 16 LED 500mA	28 Watts	6.00 Metres	Steel	
Y	1	STREET LIGHTING	DUNCOMBE GARDENS	GRIMSBY	527568.11	409962.08	1968		47624	Urbis	Axia 16 LED 350mA	19 Watts	5.00 Metres	Steel	
Y	2	STREET LIGHTING	DUNCOMBE GARDENS	GRIMSBY	527548.81	409938.99	2010		47625	Urbis	Axia 16 LED 350mA	19 Watts	6.00 Metres	Steel	
Y	3	STREET LIGHTING	DUNCOMBE GARDENS	GRIMSBY	527527.38	409945.56	2010		47626	Urbis	Axia 16 LED 350mA	19 Watts	6.00 Metres	Steel	
Y	4	STREET LIGHTING	DUNCOMBE GARDENS	GRIMSBY	527534.47	409976.15	2003		47627	Urbis	Axia 16 LED 350mA	19 Watts	5.00 Metres	Stainless Steel	
Y	5	STREET LIGHTING	DUNCOMBE GARDENS	GRIMSBY	527551.62	409972.42	2003		47628	Urbis	Axia 16 LED 350mA	19 Watts	5.00 Metres	Stainless Steel	
Y	6	STREET LIGHTING	DUNCOMBE GARDENS	GRIMSBY	527535.92	409995.57	2003		47629	Urbis	Axia 16 LED 350mA	19 Watts	5.00 Metres	Stainless Steel	
Y	7	STREET LIGHTING	DUNCOMBE GARDENS	GRIMSBY	527530.73	410008.79	2014		47630	Urbis	Axia 16 LED 350mA	19 Watts	6.00 Metres	Galvanised Steel	
Y	8	STREET LIGHTING	DUNCOMBE GARDENS	GRIMSBY	527556.46	410002.59	2003		47631	Urbis	Axia 16 LED 350mA	19 Watts	6.00 Metres	Galvanised Steel	
Y	9	STREET LIGHTING	DUNCOMBE GARDENS	GRIMSBY	527558.63	409983.87	2003		47632	Urbis	Axia 16 LED 350mA	19 Watts	6.00 Metres	Stainless Steel	
Y	10	STREET LIGHTING	DUNCOMBE GARDENS	GRIMSBY	527572.18	409995.97	2003		47633	Urbis	Axia 16 LED 350mA	19 Watts	6.00 Metres	Stainless Steel	
Y	11	STREET LIGHTING	DUNCOMBE GARDENS	GRIMSBY	527605.9	409992.34	2003		47634	Urbis	Axia 8 LED 350mA	10 Watts	5.00 Metres	Galvanised Steel	
Y	12	STREET LIGHTING	DUNCOMBE GARDENS	GRIMSBY	527614.63	410010.53	2003		47635	Urbis	Axia 8 LED 350mA	10 Watts	6.00 Metres	Galvanised Steel	
Y	13	STREET LIGHTING	DUNCOMBE GARDENS	GRIMSBY	527581.06	409977.89	2003		47636	Urbis	Axia 16 LED 350mA	19 Watts	6.00 Metres	Galvanised Steel	
Y	1	STREET LIGHTING	GARIBALDI STREET	GRIMSBY	527884.06	409967.94	1998		49081	1 Urbis LED	Teceo 32 LED 500mA	52 Watts	8.00 Metres	Galvanised Steel	
Y	2	STREET LIGHTING	GARIBALDI STREET	GRIMSBY	527861.78	409987.55	1998		49082	1 Urbis LED	Teceo 32 LED 500mA	52 Watts	8.00 Metres	Galvanised Steel	
Y	3	STREET LIGHTING	GARIBALDI STREET	GRIMSBY	527840.42	409994.08	1998		49083	1 Urbis LED	Teceo 32 LED 500mA	52 Watts	8.00 Metres	Galvanised Steel	
Y	4	STREET LIGHTING	GARIBALDI STREET	GRIMSBY	527814.28	410000.07	1998		49084	1 Urbis LED	Teceo 32 LED 500mA	52 Watts	8.00 Metres	Galvanised Steel	
Y	5	STREET LIGHTING	GARIBALDI STREET	GRIMSBY	527775.25	410007.99	1998		49085	1 Urbis LED	Teceo 32 LED 500mA	52 Watts	8.00 Metres	Galvanised Steel	
Y	6	STREET LIGHTING	GARIBALDI STREET	GRIMSBY					70235						
Y	7	STREET LIGHTING	GARIBALDI STREET	GRIMSBY	527694.05	410008.82	2014		49087	1 Urbis LED	Teceo 32 LED 500mA	52 Watts	8.00 Metres	Galvanised Steel	
Y	10	STREET LIGHTING	GARIBALDI STREET	GRIMSBY	527599.81	410032.71	1998		49090	1 Urbis LED	Teceo 40 LED 500mA	64 Watts	8.00 Metres	Steel	
Y	11	STREET LIGHTING	GARIBALDI STREET	GRIMSBY	527572.49	410023.02	1998		49091	1 Urbis LED	Teceo 40 LED 500mA	64 Watts	8.00 Metres	Steel	
Y	1	STREET LIGHTING	KENT STREET	GRIMSBY	527966.01	410247.53	1999		51556	Urbis	AXIA 3.2 32 LED 630 mA	62 Watts	8.00 Metres	Galvanised Steel	
Y	2	STREET LIGHTING	KENT STREET	GRIMSBY	527951.46	410273.29	1999		51557	1 Urbis LED	axia 3.1 16 LED 620mA	32 Watts	8.00 Metres	Galvanised Steel	
Y	3	STREET LIGHTING	KENT STREET	GRIMSBY	527923.27	410288.81	2003		51558	1 Urbis LED	axia 3.1 16 LED 620mA	32 Watts	8.00 Metres	Stainless Steel	
Y	4	STREET LIGHTING	KENT STREET	GRIMSBY	527868.29	410281	2019	10/12/2019	67644	Urbis	Teceo 40 LED 500mA	64 Watts	8.00 Metres	Galvanised Steel	
Y	5	STREET LIGHTING	KENT STREET	GRIMSBY	527837.77	410297.78	2024	23/02/2024	69801	Urbis	AXIA 3.2 32 LED 630 mA	62 Watts	8.00 Metres	Galvanised Steel	
Y	6	STREET LIGHTING	KENT STREET	GRIMSBY	527807.15	410304.29	2011		51561	1 Urbis LED	Teceo 40 LED 500mA	64 Watts	8.00 Metres	Steel	
Y	7	STREET LIGHTING	KENT STREET	GRIMSBY	527774.26	410323.08	1993		51562	1 Urbis LED	Teceo 40 LED 500mA	64 Watts	8.00 Metres	Galvanised Steel	
Y	8	STREET LIGHTING	KENT STREET	GRIMSBY	527742.56	410318.88	2019	10/12/2019	67643	Urbis	Teceo 40 LED 500mA	64 Watts	8.00 Metres	Galvanised Steel	
Y	9	STREET LIGHTING	KENT STREET	GRIMSBY	527716.34	410336.82	2024	17/05/2024	69900	Urbis	Teceo 40 LED 500mA	64 Watts	8.00 Metres	Galvanised Steel	
Y	10	STREET LIGHTING	KENT STREET	GRIMSBY	527640.61	410334.17	2000		51565	Urbis	AXIA 3.2 32 LED 630 mA	62 Watts	8.00 Metres	Galvanised Steel	
Y	11	STREET LIGHTING	KENT STREET	GRIMSBY	527592.59	410349.12	1993		51566	1 Urbis LED	Teceo 40 LED 500mA	64 Watts	5.00 Metres	Steel	
Y	12	STREET LIGHTING	KENT STREET	GRIMSBY	527561.19	410338.43	1993		51567	1 Urbis LED	Teceo 40 LED 500mA	64 Watts	5.00 Metres	Steel	
Y	1	STREET LIGHTING	NELSON STREET	GRIMSBY	527540.74	410105.99	2000		53938	1 Urbis LED	Teceo 48 LED 500mA	79 Watts	8.00 Metres	Galvanised Steel	
Y	2	STREET LIGHTING	NELSON STREET	GRIMSBY	527617.88	410096.46	2015	30/10/2015	53939	1 Urbis LED	Teceo 48 LED 500mA	79 Watts	8.00 Metres	Galvanised Steel	
Y	3	STREET LIGHTING	NELSON STREET	GRIMSBY	527684.87	410101.19	1946	01/01/1980	53940	1 Urbis LED	Teceo 32 LED 500mA	52 Watts	8.00 Metres	Steel	
Y	4	STREET LIGHTING	NELSON STREET	GRIMSBY	527726.5	410096.69	2024	14/05/2024	69893	Urbis	Axia 24 LED 1000mA	80 Watts	8.00 Metres	Galvanised Steel	
Y	1	STREET LIGHTING	THESIGER STREET	GRIMSBY	527743.84	410027.15	2005		59063	1 Urbis LED	Teceo 40 LED 500mA	64 Watts	8.00 Metres	Stainless Steel	
Y	2	STREET LIGHTING	THESIGER STREET	GRIMSBY	527731.87	410055.78	1946	01/01/1980	59064	Urbis	AXIA 3.2 32 LED 630 mA	62 Watts	8.00 Metres	Steel	
Y	3	STREET LIGHTING	THESIGER STREET	GRIMSBY	527751.76	410086.8	1946	01/01/1980	59065	Urbis	AXIA 3.2 32 LED 630 mA	62 Watts	8.00 Metres	Steel	
Y	4	STREET LIGHTING	THESIGER STREET	GRIMSBY	527742.3	410109.61	2024	13/05/2024	69894	Urbis	Teceo 40 LED 500mA	64 Watts	8.00 Metres	Galvanised Steel	
Y	5	STREET LIGHTING	THESIGER STREET	GRIMSBY	527756.52	410142.34	2024	13/05/2024	70119	Urbis	AXIA 3.2 32 LED 630 mA	62 Watts	8.00 Metres	Galvanised Steel	
Y	6	STREET LIGHTING	THESIGER STREET	GRIMSBY	527751.3	410182.36	2024	08/01/2024	69789	1 Urbis LED	axia 3.1 16 LED 620mA	32 Watts	8.00 Metres	Galvanised Steel	
Y	7	STREET LIGHTING	THESIGER STREET	GRIMSBY	527764.28	410205.09	1946	01/01/1980	59069	1 Urbis LED	Teceo 40 LED 500mA	64 Watts	8.00 Metres	Steel	
Y	8	STREET LIGHTING	THESIGER STREET	GRIMSBY	527755.99	410236.67	1946	01/01/1980	59070	1 Urbis LED	Teceo 40 LED 500mA	64 Watts	8.00 Metres	Steel	
Y	9	STREET LIGHTING	THESIGER STREET	GRIMSBY	527761	410266.88	2024	23/02/2024	69800	Urbis	Teceo 40 LED 500mA	64 Watts	8.00 Metres	Galvanised Steel	
Y	10	STREET LIGHTING	THESIGER STREET	GRIMSBY	527776.8	410298.35	1946	01/01/1980	59072	Urbis	AXIA 3.2 32 LED 630 mA	62 Watts	8.00 Metres	Steel	
Y	1	STREET LIGHTING	COBDEN STREET	GRIMSBY	527592.02	409682.8	1995		46356	1 Urbis LED	Axia 16 LED 500mA	28 Watts	6.00 Metres	Galvanised Steel	
Y	2	STREET LIGHTING	COBDEN STREET	GRIMSBY	527586.13	409672.03	1995		46357	1 Urbis LED	Axia 16 LED 500mA	28 Watts	6.00 Metres	Galvanised Steel	
Y	3	STREET LIGHTING	COBDEN STREET	GRIMSBY	527590.18	409706.19	1995		46358	1 Urbis LED	Axia 16 LED 500mA	28 Watts	6.00 Metres	Galvanised Steel	
Y	1	STREET LIGHTING	CLYDE STREET	GRIMSBY	527585.94	409622.87	1995		46329	Urbis	Axia 16 LED 350mA	19 Watts	6.00 Metres	Galvanised Steel	
Y	2	STREET LIGHTING	CLYDE STREET	GRIMSBY	527575.63	409596.63	1995		46330	Urbis	Axia 16 LED 350mA	19 Watts	6.00 Metres	Galvanised Steel	
Y	3	STREET LIGHTING	CLYDE STREET	GRIMSBY	527577.66	409611.73	1995		46331	Urbis	Axia 16 LED 350mA	19 Watts	6.00 Metres	Galvanised Steel	
Y	4	STREET LIGHTING	CLYDE STREET	GRIMSBY	527581.71	409640.64	1995		46332	Urbis	Axia 16 LED 350mA	19 Watts	6.00 Metres	Galvanised Steel	
Y	1	STREET LIGHTING	THESIGER WALK	GRIMSBY	527778.01	410205.93	2003		59075	1 Urbis LED	Axia 16 LED 500mA	28 Watts	5.00 Metres	Galvanised Steel	
Y	2	STREET LIGHTING	THESIGER WALK	GRIMSBY	527811.26	410197.99	2003		59076	1 Urbis LED	Axia 16 LED 500mA	28 Watts	5.00 Metres	Galvanised Steel	
Y	1	STREET LIGHTING	CLEETHORPE ROAD	GRIMSBY	527259.75	410404.36	2014		61524	1 Urbis LED	Ampera 48 LED 700mA	104 Watts	10.00 Metres	Aluminium	
Y	1	STREET LIGHTING	CLEETHORPE ROAD	GRIMSBY	527259.75	410404.36	2014		62056	1 Urbis LED	Ampera 48 LED 700mA	104 Watts	10.00 Metres	Aluminium	
Y	2	STREET LIGHTING	CLEETHORPE ROAD	GRIMSBY	527288.06	410415.78	2012	24/02/2012	68224	1 Urbis LED	Ampera 48 LED 700mA	104 Watts	10.00 Metres	Aluminium	
Y	3	STREET LIGHTING	CLEETHORPE ROAD	GRIMSBY	527323.9	410431.53	2012	24/02/2012	68225	1 Urbis LED	Ampera 48 LED 700mA	104 Watts	10.00 Metres	Aluminium	
Y	4	STREET LIGHTING	CLEETHORPE ROAD	GRIMSBY	527354.91	410438.38	2012	24/02/2012	68226	1 Urbis LED	Ampera 48 LED 700mA	104 Watts	10.00 Metres	Aluminium	
Y	5	STREET LIGHTING	CLEETHORPE ROAD	GRIMSBY	527367.03	410454.82	2013		62519	1 Urbis LED	Ampera 48 LED 700mA	104 Watts	18.00 Metres	Galvanised Steel	
Y	6	STREET LIGHTING	CLEETHORPE ROAD	GRIMSBY	527404.16	410455.87	2013		62520	1 Urbis LED	Ampera 48 LED 700mA	104 Watts	18.00 Metres	Galvanised Steel	
Y	7	STREET LIGHTING	CLEETHORPE ROAD	GRIMSBY	527446.18	410455.78	2013		62521	1 Urbis LED	Ampera 48 LED 700mA	104 Watts	18.00 Metres	Galvanised Steel	
Y	8	STREET LIGHTING	CLEETHORPE ROAD	GRIMSBY	527485.81	410457.59	2013		62522	1 Urbis LED	Ampera 48 LED 700mA	104 Watts	18.00 Metres	Galvanised Steel	
Y	9	STREET LIGHTING	CLEETHORPE ROAD	GRIMSBY	527520.16	410438.6	2013		62518	1 Urbis LED	Ampera 48 LED 700mA	104 Watts	18.00 Metres	Galvanised Steel	
Y	10	STREET LIGHTING	CLEETHORPE ROAD	GRIMSBY	527574.12	410462.45	2013		62523	1 Urbis LED	Ampera 48 LED 700mA	104 Watts	18.00 Metres	Galvanised Steel	
Y	11	STREET LIGHTING	CLEETHORPE ROAD	GRIMSBY	527612.71	410464.26	2013		62524	1 Urbis LED	Ampera 48 LED 700mA	104 Watts	18.00 Metres	Galvanised Steel	
Y	12	STREET LIGHTING	CLEETHORPE ROAD	GRIMSBY	527652.45	410466.85	2013		62525	1 Urbis LED	Ampera 48 LED 700mA	104 Watts	18.00 Metres	Galvanised Steel	
Y	13	STREET LIGHTING	CLEETHORPE ROAD	GRIMSBY	527692.12	410465.97	2013		62526	1 Urbis LED	Ampera 48 LED 700mA	104 Watts	18.00 Metres	Galvanised Steel	
Y	14	STREET LIGHTING	CLEETHORPE ROAD	GRIMSBY	527724.25	410443.05	1990		61537	1 Urbis LED	Ampera 48 LED 700mA	104 Watts	12.00 Metres	Galvanised Steel	
Y	14	STREET LIGHTING	CLEETHORPE ROAD	GRIMSBY	527724.25	410443.05	1990		62069	1 Urbis LED	Ampera 48 LED 700mA	104 Watts	12.00 Metres	Galvanised Steel	
Y	15	STREET LIGHTING	CLEETHORPE ROAD	GRIMSBY	527756.28	410427.95	1990		46227	1 Urbis LED	Ampera 48 LED 700mA	104 Watts	12.00 Metres	Galvanised Steel	
Y	16	STREET LIGHTING	CLEETHORPE ROAD	GRIMSBY	527760.15	410445.07	1990		46228	1 Urbis LED	Ampera 48 LED 700mA	104 Watts	12.00 Metres	Galvanised Steel	
Y	17	STREET LIGHTING	CLEETHORPE ROAD	GRIMSBY	527796.42	410419.67	1990		46229	1 Urbis LED	Ampera 48 LED 700mA	104 Watts	12.00 Metres	Galvanised Steel	
Y	18	STREET LIGHTING	CLEETHORPE ROAD	GRIMSBY	527799.92	410436.6	1990		46230	1 Urbis LED	Ampera 48 LED 700mA	104 Watts	12.00 Metres	Galvanised Steel	
Y	19	STREET LIGHTING	CLEETHORPE ROAD	GRIMSBY	527841.53	410409.54	1990		46231	1 Urbis LED	Ampera 48 LED 700mA	104 Watts	12.00 Metres	Galvanised Steel	
Y	20	STREET LIGHTING	CLEETHORPE ROAD	GRIMSBY	527845.58	410426.85	1990		46232	1 Urbis LED	Ampera 48 LED 700mA	104 Watts	12.00 Metres	Galvanised Steel	
Y	21	STREET LIGHTING	CLEETHORPE ROAD	GRIMSBY	527892.71	410398.22	1990		46233	1 Urbis LED	Ampera 48 LED 700mA	104 Watts	12.00 Metres	Galvanised Steel	
Y	22	STREET LIGHTING	CLEETHORPE ROAD	GRIMSBY	527897.68	410415.71	1990		46234	1 Urbis LED	Ampera 48 LED 700mA	104 Watts	12.00 Metres	Galvanised Steel	
Y	23	STREET LIGHTING	CLEETHORPE ROAD	GRIMSBY	527940.58	410388.09	1990		46235	1 Urbis LED	Ampera 48 LED 700mA	104 Watts	12.00 Metres	Galvanised Steel	
Y	24	STREET LIGHTING	CLEETHORPE ROAD	GRIMSBY	527943.9	410405.76	1990		46236	1 Urbis LED	Ampera 48 LED 700mA	104 Watts	12.00 Metres	Galvanised Steel	
Y	25	STREET LIGHTING	CLEETHORPE ROAD	GRIMSBY	527994.29	410376.59	1990		46237	1 Urbis LED	Ampera 48 LED 700mA	104 Watts	12.00 Metres	Galvanised Steel	
Y	26	STREET LIGHTING	CLEETHORPE ROAD	GRIMSBY	527997.61	410394.27	1990		46238	1 Urbis LED	Ampera 48 LED 700mA	104 Watts	12.00 Metres	Galvanised Steel	

Y	27	STREET LIGHTING	CLEETHORPE ROAD	GRIMSBY	528041.8	410366.65	1990		46239	1 Urbis LED	Ampera 48 LED 700mA	104 Watts	12.00 Metres	Galvanised Steel	
Y	28	STREET LIGHTING	CLEETHORPE ROAD	GRIMSBY	528045.11	410384.33	1990		46240	1 Urbis LED	Ampera 48 LED 700mA	104 Watts	12.00 Metres	Galvanised Steel	
Y	29	STREET LIGHTING	CLEETHORPE ROAD	GRIMSBY	528087.83	410356.89	1990		46241	1 Urbis LED	Ampera 48 LED 700mA	104 Watts	12.00 Metres	Galvanised Steel	
Y	30	STREET LIGHTING	CLEETHORPE ROAD	GRIMSBY	528088.75	410374.94	1990		46242	1 Urbis LED	Ampera 48 LED 700mA	104 Watts	12.00 Metres	Galvanised Steel	
Y	31	STREET LIGHTING	CLEETHORPE ROAD	GRIMSBY	528138.46	410345.66	1990		46243	1 Urbis LED	Ampera 48 LED 700mA	104 Watts	12.00 Metres	Galvanised Steel	
Y	32	STREET LIGHTING	CLEETHORPE ROAD	GRIMSBY	528138.64	410364.26	1990		46244	1 Urbis LED	Ampera 48 LED 700mA	104 Watts	12.00 Metres	Galvanised Steel	
Y	33	STREET LIGHTING	CLEETHORPE ROAD	GRIMSBY	528174.91	410338.48	1990		46245	1 Urbis LED	Ampera 48 LED 700mA	104 Watts	12.00 Metres	Galvanised Steel	
Y	34	STREET LIGHTING	CLEETHORPE ROAD	GRIMSBY	528186.15	410356.89	1990		46246	1 Urbis LED	Ampera 48 LED 700mA	104 Watts	12.00 Metres	Galvanised Steel	
Y	35	STREET LIGHTING	CLEETHORPE ROAD	GRIMSBY	528221.34	410325.57	1990		46247	1 Urbis LED	Ampera 48 LED 700mA	104 Watts	12.00 Metres	Galvanised Steel	
Y	36	STREET LIGHTING	CLEETHORPE ROAD	GRIMSBY	528224.76	410348.61	1990		46248	1 Urbis LED	Ampera 48 LED 700mA	104 Watts	12.00 Metres	Galvanised Steel	
Y	37	STREET LIGHTING	CLEETHORPE ROAD	GRIMSBY	528265.9	410313.99	1990		46249	1 Urbis LED	Ampera 48 LED 700mA	104 Watts	12.00 Metres	Galvanised Steel	
Y	38	STREET LIGHTING	CLEETHORPE ROAD	GRIMSBY	528273.75	410337.85	1990		46250	1 Urbis LED	Ampera 48 LED 700mA	104 Watts	12.00 Metres	Galvanised Steel	
Y	39	STREET LIGHTING	CLEETHORPE ROAD	GRIMSBY	528303.24	410301.76	1990		46251	1 Urbis LED	Ampera 48 LED 700mA	104 Watts	12.00 Metres	Galvanised Steel	
Y	40	STREET LIGHTING	CLEETHORPE ROAD	GRIMSBY	528317.04	410322.65	1990		46252	1 Urbis LED	Ampera 48 LED 700mA	104 Watts	12.00 Metres	Galvanised Steel	
Y	41	STREET LIGHTING	CLEETHORPE ROAD	GRIMSBY	528340.07	410286.76	1990		46253	1 Urbis LED	Ampera 48 LED 700mA	104 Watts	12.00 Metres	Galvanised Steel	
Y	42	STREET LIGHTING	CLEETHORPE ROAD	GRIMSBY	528351.72	410306.89	1990		46254	1 Urbis LED	Ampera 48 LED 700mA	104 Watts	12.00 Metres	Galvanised Steel	
Y	43	STREET LIGHTING	CLEETHORPE ROAD	GRIMSBY	528386.15	410265.43	1990		46255	1 Urbis LED	Ampera 48 LED 700mA	104 Watts	12.00 Metres	Galvanised Steel	
Y	44	STREET LIGHTING	CLEETHORPE ROAD	GRIMSBY	528399.31	410284.55	1990		46256	1 Urbis LED	Ampera 48 LED 700mA	104 Watts	12.00 Metres	Galvanised Steel	
Y	45	STREET LIGHTING	CLEETHORPE ROAD	GRIMSBY	528423.99	410245.19	1990		46257	1 Urbis LED	Ampera 48 LED 700mA	104 Watts	12.00 Metres	Galvanised Steel	
Y	46	STREET LIGHTING	CLEETHORPE ROAD	GRIMSBY	528435.76	410267.28	1990		46258	1 Urbis LED	Ampera 48 LED 700mA	104 Watts	12.00 Metres	Galvanised Steel	
Y	47	STREET LIGHTING	CLEETHORPE ROAD	GRIMSBY	528470.95	410222.85	1990		46259	1 Urbis LED	Ampera 48 LED 700mA	104 Watts	12.00 Metres	Galvanised Steel	
Y	48	STREET LIGHTING	CLEETHORPE ROAD	GRIMSBY	528480.19	410247.72	1990		46260	1 Urbis LED	Ampera 48 LED 700mA	104 Watts	12.00 Metres	Galvanised Steel	
Y	49	STREET LIGHTING	CLEETHORPE ROAD	GRIMSBY	528512.21	410203.73	1990		46261	1 Urbis LED	Ampera 48 LED 700mA	104 Watts	12.00 Metres	Galvanised Steel	
Y	50	STREET LIGHTING	CLEETHORPE ROAD	GRIMSBY	528524.49	410225.82	1990		46262	1 Urbis LED	Ampera 48 LED 700mA	104 Watts	12.00 Metres	Galvanised Steel	
Y	51	STREET LIGHTING	CLEETHORPE ROAD	GRIMSBY	528565.75	410178.22	1990		46263	1 Urbis LED	Ampera 48 LED 700mA	104 Watts	12.00 Metres	Galvanised Steel	
Y	52	STREET LIGHTING	CLEETHORPE ROAD	GRIMSBY	528559.68	410206.07	1990		46264	1 Urbis LED	Ampera 48 LED 700mA	104 Watts	12.00 Metres	Galvanised Steel	
Y	53	STREET LIGHTING	CLEETHORPE ROAD	GRIMSBY	528597.78	410162.65	1990		46265	1 Urbis LED	Ampera 48 LED 700mA	104 Watts	12.00 Metres	Galvanised Steel	
Y	54	STREET LIGHTING	CLEETHORPE ROAD	GRIMSBY	528611.95	410180.44	1990		46266	1 Urbis LED	Ampera 48 LED 700mA	104 Watts	12.00 Metres	Galvanised Steel	
Y	55	STREET LIGHTING	CLEETHORPE ROAD	GRIMSBY	528647.02	410139.04	1990		46267	1 Urbis LED	Ampera 48 LED 700mA	104 Watts	12.00 Metres	Galvanised Steel	
Y	56	STREET LIGHTING	CLEETHORPE ROAD	GRIMSBY	528658.66	410160.5	1990		46268	1 Urbis LED	Ampera 48 LED 700mA	104 Watts	12.00 Metres	Galvanised Steel	
Y	57	STREET LIGHTING	CLEETHORPE ROAD	GRIMSBY	528690.68	410116.58	1990		46269	1 Urbis LED	Ampera 48 LED 700mA	104 Watts	12.00 Metres	Galvanised Steel	
Y	58	STREET LIGHTING	CLEETHORPE ROAD	GRIMSBY	528708.02	410137.08	1990		46270	1 Urbis LED	Ampera 48 LED 700mA	104 Watts	12.00 Metres	Galvanised Steel	
Y	59	STREET LIGHTING	CLEETHORPE ROAD	GRIMSBY	528729.8	410099.36	1990		46271	1 Urbis LED	Ampera 48 LED 700mA	104 Watts	12.00 Metres	Galvanised Steel	
Y	60	STREET LIGHTING	CLEETHORPE ROAD	GRIMSBY	528737.64	410121.64	1990		46272	1 Urbis LED	Ampera 48 LED 700mA	104 Watts	12.00 Metres	Galvanised Steel	
Y	61	STREET LIGHTING	CLEETHORPE ROAD	GRIMSBY	528763.21	410083.54	1990		46273	1 Urbis LED	Ampera 48 LED 700mA	104 Watts	12.00 Metres	Galvanised Steel	
Y	62	STREET LIGHTING	CLEETHORPE ROAD	GRIMSBY	528774.98	410104.11	1990		46274	1 Urbis LED	Ampera 48 LED 700mA	104 Watts	12.00 Metres	Galvanised Steel	
Y	1	STREET LIGHTING	GARIBALDI STREET CAR PARK	GRIMSBY	527854	409976	1990		61613	Philips		250 Watts	12.00 Metres	Galvanised Steel	
Y	1	STREET LIGHTING	GARIBALDI STREET CAR PARK	GRIMSBY	527854	409976	1990		62145	Philips		250 Watts	12.00 Metres	Galvanised Steel	
Y	2	STREET LIGHTING	GARIBALDI STREET CAR PARK	GRIMSBY	527838	409981	1990		61614	Philips		250 Watts	12.00 Metres	Galvanised Steel	
Y	2	STREET LIGHTING	GARIBALDI STREET CAR PARK	GRIMSBY	527838	409981	1990		62146	Philips		250 Watts	12.00 Metres	Galvanised Steel	
Y	3	STREET LIGHTING	GARIBALDI STREET CAR PARK	GRIMSBY	527818	409986	1990		61615	Philips		250 Watts	12.00 Metres	Galvanised Steel	
Y	3	STREET LIGHTING	GARIBALDI STREET CAR PARK	GRIMSBY	527818	409986	1990		62147	Philips	* NOT ON FILE *	250 Watts	12.00 Metres	Galvanised Steel	
Y	4	STREET LIGHTING	GARIBALDI STREET CAR PARK	GRIMSBY	527800	409990	1990		61616	Philips		250 Watts	12.00 Metres	Galvanised Steel	
Y	4	STREET LIGHTING	GARIBALDI STREET CAR PARK	GRIMSBY	527800	409990	1990		62148	Philips		250 Watts	12.00 Metres	Galvanised Steel	
Y	5	STREET LIGHTING	GARIBALDI STREET CAR PARK	GRIMSBY	527770	409936	1990		61617	Philips		250 Watts	12.00 Metres	Galvanised Steel	
Y	5	STREET LIGHTING	GARIBALDI STREET CAR PARK	GRIMSBY	527770	409936	1990		62149	Philips		250 Watts	12.00 Metres	Galvanised Steel	
Y	6	STREET LIGHTING	GARIBALDI STREET CAR PARK	GRIMSBY	527790	409932	1990		61618	Philips		250 Watts	12.00 Metres	Galvanised Steel	
Y	6	STREET LIGHTING	GARIBALDI STREET CAR PARK	GRIMSBY	527790	409932	1990		62150	Philips		250 Watts	12.00 Metres	Galvanised Steel	
Y	7	STREET LIGHTING	GARIBALDI STREET CAR PARK	GRIMSBY	527814	409927	1990		61619	Philips		250 Watts	12.00 Metres	Galvanised Steel	
Y	7	STREET LIGHTING	GARIBALDI STREET CAR PARK	GRIMSBY	527814	409927	1990		62151	Philips		250 Watts	12.00 Metres	Galvanised Steel	
Y	8	STREET LIGHTING	GARIBALDI STREET CAR PARK	GRIMSBY	527834	409921	1990		61620	Philips		250 Watts	12.00 Metres	Galvanised Steel	
Y	8	STREET LIGHTING	GARIBALDI STREET CAR PARK	GRIMSBY	527834	409921	1990		62152	Philips		250 Watts	12.00 Metres	Galvanised Steel	
Y	1	STREET LIGHTING	ALBION HOUSE	GRIMSBY	527869.03	410155.4	2007		42885	Urbis	Axia 16 LED 350mA	19 Watts	6.00 Metres	Steel	
Y	2	STREET LIGHTING	ALBION HOUSE	GRIMSBY	527872.71	410171.16	2007		42886	Urbis	Axia 16 LED 350mA	19 Watts	6.00 Metres	Steel	
Y	3	STREET LIGHTING	ALBION HOUSE	GRIMSBY	527848.55	410190.02	2007		42887	Urbis	Axia 16 LED 350mA	19 Watts	6.00 Metres	Steel	
Y	5	STREET LIGHTING	ALBION HOUSE	GRIMSBY	527854.44	410214.03	2007		42889	Urbis	Axia 16 LED 350mA	19 Watts	6.00 Metres	Steel	
Y	1	STREET LIGHTING	APPLEBY COURT	GRIMSBY	528109.57	410276.78	2007		43295	1 Urbis LED	Axia 16 LED 500mA	28 Watts	6.00 Metres	Galvanised Steel	
Y	2	STREET LIGHTING	APPLEBY COURT	GRIMSBY	528102.76	410256.53	2007		43296	1 Urbis LED	Axia 16 LED 500mA	28 Watts	6.00 Metres	Galvanised Steel	
Y	1	STREET LIGHTING	BELPER COURT	GRIMSBY	528162.49	410301.37	2007		43983	1 Urbis LED	Axia 16 LED 500mA	28 Watts	6.00 Metres	Galvanised Steel	
Y	1	STREET LIGHTING	GARIBALDI HOUSE	GRIMSBY	527857.19	410000.74	2007		49076	Urbis	Axia 16 LED 350mA	19 Watts	6.00 Metres	Steel	
Y	3	STREET LIGHTING	GARIBALDI HOUSE	GRIMSBY	527901.19	410006.95	2007		49078	Urbis	Axia 16 LED 350mA	19 Watts	6.00 Metres	Steel	
Y	4	STREET LIGHTING	GARIBALDI HOUSE	GRIMSBY	527903.71	410019.55	2007		49079	Urbis	Axia 16 LED 350mA	19 Watts	6.00 Metres	Galvanised Steel	
Y	1	STREET LIGHTING	HAINTON SQUARE	GRIMSBY	527606.43	409572.04	1994		50072	1 Urbis LED	Teceo 48 LED 700mA	104 Watts	12.00 Metres	Galvanised Steel	
Y	2	STREET LIGHTING	HAINTON SQUARE	GRIMSBY	527606.24	409547.92	1994		50073	1 Urbis LED	Teceo 48 LED 700mA	104 Watts	12.00 Metres	Galvanised Steel	
Y	3	STREET LIGHTING	HAINTON SQUARE	GRIMSBY	527576.41	409546.63	1994		50074	1 Urbis LED	Teceo 48 LED 700mA	104 Watts	12.00 Metres	Galvanised Steel	
Y	4	STREET LIGHTING	HAINTON SQUARE	GRIMSBY	527579.36	409576.82	1994		50075	1 Urbis LED	Teceo 48 LED 700mA	104 Watts	12.00 Metres	Galvanised Steel	
Y	1	STREET LIGHTING	MANSFIELD COURT	GRIMSBY	528075.81	410340.48	2007		53228	1 Urbis LED	Axia 16 LED 500mA	28 Watts	6.00 Metres	Galvanised Steel	
Y	1	STREET LIGHTING	MILFORD COURT	GRIMSBY	528129.48	410327.7	2007		53608	1 Urbis LED	Axia 16 LED 500mA	28 Watts	6.00 Metres	Galvanised Steel	
Y	1	STREET LIGHTING	MUNSTER COURT	GRIMSBY	528099.99	410328.65	2007		53918	Urbis	Axia 8 LED 350mA	10 Watts	6.00 Metres	Galvanised Steel	
Y	2	STREET LIGHTING	TENNYSON HOUSE	GRIMSBY	527868.75	410281.08	1963		58838	1 Urbis LED	Teceo 24 LED 500mA	40 Watts	5.00 Metres	Steel	
Y	3	STREET LIGHTING	TENNYSON HOUSE	GRIMSBY	527870.82	410255.47	2007		58839	1 Urbis LED	Teceo 24 LED 500mA	40 Watts	6.00 Metres	Steel	
Y	1	STREET LIGHTING	THESIGER HOUSE	GRIMSBY	527806.86	410011.07	1963		59061	1 Urbis LED	Axia 16 LED 500mA	28 Watts	5.00 Metres	Steel	
Y	1	STREET LIGHTING	WESLEY COURT	GRIMSBY	528050.1	410277.61	2007		60284	1 Urbis LED	Axia 16 LED 500mA	28 Watts	6.00 Metres	Steel	
Y	1	STREET LIGHTING	WINDSOR COURT	GRIMSBY	528047.96	410342.32	2007		60889	1 Urbis LED	Axia 16 LED 500mA	28 Watts	6.00 Metres	Galvanised Steel	
Y	1	STREET LIGHTING	WINDSOR COURT	GRIMSBY	528047.96	410342.32	2007		67359	1 Urbis LED	Axia 16 LED 500mA	28 Watts	6.00 Metres	Galvanised Steel	
Y	1	STREET LIGHTING	WORDSWORTH COURT	GRIMSBY	528032.61	410273.2	1963		61218	1 Urbis LED	Axia 16 LED 500mA	28 Watts	6.00 Metres	Galvanised Steel	
Y	1	STREET LIGHTING	BEDFORD STREET	GRIMSBY	528152.82	410056.42	2016	30/06/2016	43892	1 Urbis LED	Axia 16 LED 500mA	28 Watts	6.00 Metres	Galvanised Steel	
Y	2	STREET LIGHTING	BEDFORD STREET	GRIMSBY	528161.53	410081.13	2016	30/06/2016	43893	1 Urbis LED	Axia 16 LED 500mA	28 Watts	6.00 Metres	Galvanised Steel	
Y	3	STREET LIGHTING	BEDFORD STREET	GRIMSBY	528172.11	410110.21	2016	30/06/2016	43894	1 Urbis LED	Axia 16 LED 500mA	28 Watts	6.00 Metres	Galvanised Steel	
Y	4	STREET LIGHTING	BEDFORD STREET	GRIMSBY	528183.22	410142.33	2016	30/06/2016	43895	1 Urbis LED	Axia 16 LED 500mA	28 Watts	6.00 Metres	Galvanised Steel	
Y	5	STREET LIGHTING	BEDFORD STREET	GRIMSBY	528197	410173.41	2012		43896	1 Urbis LED	Axia 16 LED 500mA	28 Watts	6.00 Metres	Steel	
Y	6	STREET LIGHTING	BEDFORD STREET	GRIMSBY	528242.97	410166.93	2016	30/06/2016	43897	1 Urbis LED	Axia 16 LED 500mA	28 Watts	6.00 Metres	Galvanised Steel	
Y	1	STREET LIGHTING	CASSWELL CLOSE	GRIMSBY	528487.49	410096.42	1967		45431	1 Urbis LED	Teceo 16 LED 500mA	28 Watts	5.00 Metres	Steel	
Y	2	STREET LIGHTING	CASSWELL CLOSE	GRIMSBY	528500.41	410123.06	1967		45432	1 Urbis LED	Teceo 16 LED 500mA	28 Watts	5.00 Metres	Steel	
Y	1	STREET LIGHTING	DUKE STREET	GRIMSBY	528284.95	410099.02	2023	03/07/2023	69292	Urbis	Teceo 24 LED 500mA	40 Watts	8.00 Metres	Galvanised Steel	
Y	2	STREET LIGHTING	DUKE STREET	GRIMSBY	528312.07	410084.18	1996		47603	1 Urbis LED	Teceo 16 LED 500mA	28 Watts	6.00 Metres	Galvanised Steel	
Y	3	STREET LIGHTING	DUKE STREET	GRIMSBY	528333.34	410082.34	1996		47604	1 Urbis LED	Axia 16 LED 500mA	28 Watts	6.00 Metres	Galvanised Steel	
Y	4	STREET LIGHTING	DUKE STREET	GRIMSBY	528359.66	410059.75	1996		47605	1 Urbis LED	Teceo 16 LED 500mA	28 Watts	6.00 Metres	Galvanised Steel	
Y	5	STREET LIGHTING	DUKE STREET	GRIMSBY	528390.04	410054.49	1996		47606	1 Urbis LED	Axia 16 LED 500mA	28 Watts	6.00 Metres	Galvanised Steel	
Y	6	STREET LIGHTING	DUKE STREET	GRIMSBY	528409.79	410035.44	1996		47607	1 Urbis LED	Teceo 16 LED 500mA	28 Watts	6.00 Metres	Galvanised Steel	
Y	7	STREET LIGHTING	DUKE STREET	GRIMSBY	528432.7	410033.89	2002		47608	1 Urbis LED	Axia 16 LED 500mA	28 Watts	6.00 Metres	Stainless Steel	
Y	8	STREET LIGHTING	DUKE STREET	GRIMSBY	528459.66	410011.93	1998		47609	1 Urbis LED	Teceo 16 LED 500mA	28 Watts	5.00 Metres	Galvanised Steel	
Y	9	STREET LIGHTING	DUKE STREET	GRIMSBY	528508.15	409999.31	2023	06/06/2023	69228	Urbis	Axia 24 LED 500mA	28 Watts	6.00 Metres	Galvanised Steel	
Y	10	STREET LIGHTING	DUKE STREET	GRIMSBY	528537.63	409972.5	1998		47611	1 Urbis LED	Axia 16 LED 500mA	28 Watts	5.00 Metres	Galvanised Steel	
Y	1	STREET LIGHTING	GRAFTON STREET	GRIMSBY	528280.28	410186.9	1991		49390	1 Urbis LED	Teceo 16 LED 500mA	28 Watts	6.00 Metres	Galvanised Steel	
Y	2	STREET LIGHTING	GRAFTON STREET	GRIMSBY	528298.25	410169.11	1991		49391	1 Urbis LED	Teceo 16 LED 500mA	28 Watts	6.00 Metres	Galvanised Steel	
Y	3	STREET LIGHTING	GRAFTON STREET	GRIMSBY	528321.67	410158.16	1991		49392	1 Urbis LED	Teceo 16 LED 500mA	28 Watts	6.00 Metres	Galvanised Steel	
Y	4	STREET LIGHTING	GRAFTON STREET	GRIMSBY	528343.19	410146.71	1991		49393	1 Urbis LED	Teceo 16 LED 500mA	28 Watts	6.00 Metres	Galvanised Steel	
Y	5	STREET LIGHTING	GRAFTON STREET	GRIMSBY	528365.6	410145.32	1991		49394	1 Urbis LED	Teceo 16 LED 500mA	28 Watts	6.00 Metres	Galvanised Steel	
Y	6	STREET LIGHTING	GRAFTON STREET	GRIMSBY	528395.47	410130.82	1991		49395	1 Urbis LED	Teceo 16 LED 500mA	28 Watts	6.00 Metres	Galvanised Steel	
Y	7	STREET LIGHTING	GRAFTON STREET	GRIMSBY	528421.92	410116.08	2008		49396	1 Urbis LED	Teceo 16 LED 500mA	28 Watts	6.00 Metres	Steel	
Y	8	STREET LIGHTING	GRAFTON STREET	GRIMSBY	528470.06	410089.23	2012		49397	1 Urbis LED	Teceo 16 LED 500mA	28 Watts	6.00 Metres	Steel	
Y	9	STREET LIGHTING	GRAFTON STREET	GRIMSBY	528498.26	410072.04	1991		49398	1 Urbis LED	Teceo 16 LED 500mA	28 Watts	6.00 Metres	Galvanised Steel	
Y	10	STREET LIGHTING	GRAFTON STREET	GRIMSBY	528543.32	410058.5	1991		49399	1 Urbis LED	Teceo 16 LED 500mA	28 Watts	6.00 Metres	Galvanised Steel	
Y	11	STREET LIGHTING	GRAFTON STREET	GRIMSBY	528565.34	410047.55	1991		49400	1 Urbis LED	Teceo 16 LED 500mA	28 Watts	6.00 Metres	Galvanised Steel	
Y	12	STREET LIGHTING	GRAFTON STREET	GRIMSBY	528586.36	410037.99	2002		49401	1 Urbis LED	Teceo 16 LED 500mA	28 Watts	6.00 Metres	Galvanised Steel	
Y	13	STREET LIGHTING	GRAFTON STREET	GRIMSBY	528611.92	410017.03	2019	07/10/2019	67640	Urbis	Teceo 16 LED 500mA	28 Watts	6.00 Metres	Galvanised Steel	
Y	14	STREET LIGHTING	GRAFTON STREET	GRIMSBY	528639.39	410001.16	1991		49403	1 Urbis LED	Teceo 16 LED 500mA	28 Watts	6.00 Metres	Galvanised Steel	
Y	1	STREET LIGHTING	GRAFTON STREET CAR PARK	GRIMSBY	528413.45	410101.21	1982		49404	Urbis	Axia 16 LED 350mA	19 Watts	5.00 Metres	Galvanised Steel	
Y	2	STREET LIGHTING	GRAFTON STREET CAR PARK	GRIMSBY	528406.61	410085.83	1982		49405	Urbis	Axia 16 LED 350mA	19 Watts	5.00 Metres	Galvanised Steel	

Y	1	STREET LIGHTING	GRANT STREET	GRIMSBY	528806.51	410159.97	1964		49450	1 Urbis LED	Teceo 40 LED 500mA	64 Watts	8.00 Metres	Steel	
Y	2	STREET LIGHTING	GRANT STREET	GRIMSBY	528769.93	410177.62	1964		49451	1 Urbis LED	Teceo 40 LED 500mA	64 Watts	8.00 Metres	Steel	
Y	1	STREET LIGHTING	HAMILTON STREET	GRIMSBY	528390.12	410208.49	1995		50098	1 Urbis LED	Teceo 24 LED 500mA	40 Watts	6.00 Metres	Galvanised Steel	
Y	2	STREET LIGHTING	HAMILTON STREET	GRIMSBY	528421.38	410193.49	1995		50099	1 Urbis LED	Teceo 24 LED 500mA	40 Watts	6.00 Metres	Galvanised Steel	
Y	3	STREET LIGHTING	HAMILTON STREET	GRIMSBY	528448.6	410170.64	1986		50100	1 Urbis LED	Teceo 24 LED 500mA	40 Watts	6.00 Metres	Galvanised Steel	
Y	4	STREET LIGHTING	HAMILTON STREET	GRIMSBY	528476.3	410166.69	1986		50101	1 Urbis LED	Teceo 24 LED 500mA	40 Watts	6.00 Metres	Galvanised Steel	
Y	5	STREET LIGHTING	HAMILTON STREET	GRIMSBY	528497.18	410146.94	1995		50102	1 Urbis LED	Teceo 24 LED 500mA	40 Watts	6.00 Metres	Galvanised Steel	
Y	6	STREET LIGHTING	HAMILTON STREET	GRIMSBY	528524.4	410133.97	1986		50103	1 Urbis LED	Teceo 24 LED 500mA	40 Watts	6.00 Metres	Galvanised Steel	
Y	7	STREET LIGHTING	HAMILTON STREET	GRIMSBY	528551.23	410120.87	1986		50104	1 Urbis LED	Teceo 24 LED 500mA	40 Watts	6.00 Metres	Galvanised Steel	
Y	8	STREET LIGHTING	HAMILTON STREET	GRIMSBY	528584.9	410113.84	2004		50105	1 Urbis LED	Teceo 24 LED 500mA	40 Watts	6.00 Metres	Stainless Steel	
Y	9	STREET LIGHTING	HAMILTON STREET	GRIMSBY	528610.98	410101.12	1995		50106	1 Urbis LED	Teceo 24 LED 500mA	40 Watts	6.00 Metres	Galvanised Steel	
Y	10	STREET LIGHTING	HAMILTON STREET	GRIMSBY	528647.94	410072.83	1986		50107	1 Urbis LED	Teceo 24 LED 500mA	40 Watts	6.00 Metres	Galvanised Steel	
Y	11	STREET LIGHTING	HAMILTON STREET	GRIMSBY	528667.94	410063.47	1995		50108	1 Urbis LED	Teceo 24 LED 500mA	40 Watts	6.00 Metres	Galvanised Steel	
Y	12	STREET LIGHTING	HAMILTON STREET	GRIMSBY	528695.28	410061.95	1986		50109	1 Urbis LED	Teceo 24 LED 500mA	40 Watts	6.00 Metres	Galvanised Steel	
Y	13	STREET LIGHTING	HAMILTON STREET	GRIMSBY	528726.3	410047.08	2010		50110	1 Urbis LED	Teceo 24 LED 500mA	40 Watts	6.00 Metres	Galvanised Steel	
Y	14	STREET LIGHTING	HAMILTON STREET	GRIMSBY	528742.95	410026.89	1986		50111	1 Urbis LED	Teceo 24 LED 500mA	40 Watts	6.00 Metres	Galvanised Steel	
Y	1	STREET LIGHTING	CASSWELL HOUSE	GRIMSBY	528535.47	410074.07	1968		45433	1 Urbis LED	Axia 16 LED 500mA	28 Watts	5.00 Metres	Steel	
Y	2	STREET LIGHTING	CASSWELL HOUSE	GRIMSBY	528568.88	410062.3	2014		45434	Urbis	Axia 16 LED 350mA	19 Watts	6.00 Metres	Galvanised Steel	
Y	3	STREET LIGHTING	CASSWELL HOUSE	GRIMSBY	528557.36	410076.41	2014		45435	Urbis	Axia 8 LED 350mA	10 Watts	6.00 Metres	Galvanised Steel	
Y	4	STREET LIGHTING	CASSWELL HOUSE	GRIMSBY	528567.03	410096.58	2018	17/12/2018	67253	Urbis	Axia 8 LED 350mA	10 Watts	6.00 Metres	Steel	
Y	5	STREET LIGHTING	CASSWELL HOUSE	GRIMSBY	528536.86	410107.24	2006		45437	1 Urbis LED	Axia 16 LED 500mA	28 Watts	6.00 Metres	Galvanised Steel	
Y	6	STREET LIGHTING	CASSWELL HOUSE	GRIMSBY	528524.2	410092.62	2006		45438	Urbis	Axia 8 LED 350mA	10 Watts	6.00 Metres	Galvanised Steel	
Y	1	STREET LIGHTING	HAMILTON STREET SERVICE ROAD	GRIMSBY	528417.31	410151.94	1986		50113	1 Urbis LED	Axia 16 LED 500mA	28 Watts	5.00 Metres	Galvanised Steel	
Y	1	STREET LIGHTING	HAMILTON STREET FLATS	GRIMSBY	528734.49	410079.07	1986		50112	1 Urbis LED	Axia 16 LED 500mA	28 Watts	6.00 Metres	Galvanised Steel	
Y	1	STREET LIGHTING	HUMBER STREET	GRIMSBY	528200.42	410364.17	1985		51041	1 Urbis LED	Ampera 48 LED 700mA	104 Watts	12.00 Metres	Galvanised Steel	
Y	2	STREET LIGHTING	HUMBER STREET	GRIMSBY	528224.17	410401.22	1946		51042	1 Urbis LED	Teceo 40 LED 500mA	64 Watts	8.00 Metres	Steel	
Y	3	STREET LIGHTING	HUMBER STREET	GRIMSBY	528220.58	410430.3	2019	14/10/2019	67503	Urbis	Teceo 40 LED 500mA	64 Watts	8.00 Metres	Galvanised Steel	
Y	4	STREET LIGHTING	HUMBER STREET	GRIMSBY	528229.47	410470.51	2019	15/01/2019	67270	Urbis	Teceo 40 LED 500mA	64 Watts	8.00 Metres	Galvanised Steel	
Y	5	STREET LIGHTING	HUMBER STREET	GRIMSBY	528236.95	410497.98	1946		51045	1 Urbis LED	Teceo 40 LED 500mA	64 Watts	8.00 Metres	Steel	
Y	6	STREET LIGHTING	HUMBER STREET	GRIMSBY	528258.21	410507.41	1946		51046	1 Urbis LED	Teceo 40 LED 500mA	64 Watts	8.00 Metres	Steel	
Y	1	STREET LIGHTING	MANSEL STREET	GRIMSBY	528699.08	410044.25	2010		53222	1 Urbis LED	Axia 16 LED 500mA	28 Watts	6.00 Metres	Steel	
Y	2	STREET LIGHTING	MANSEL STREET	GRIMSBY	528685	410016	2002		53223	1 Urbis LED	Axia 16 LED 500mA	28 Watts	6.00 Metres	Galvanised Steel	
Y	3	STREET LIGHTING	MANSEL STREET	GRIMSBY	528672.32	409996.71	1983		53224	1 Urbis LED	Axia 16 LED 500mA	28 Watts	6.00 Metres	Galvanised Steel	
Y	4	STREET LIGHTING	MANSEL STREET	GRIMSBY	528661.19	409966.01	1983		53225	1 Urbis LED	Axia 16 LED 500mA	28 Watts	6.00 Metres	Galvanised Steel	
Y	5	STREET LIGHTING	MANSEL STREET	GRIMSBY	528646.25	409935.19	1983		53226	1 Urbis LED	Axia 16 LED 500mA	28 Watts	6.00 Metres	Galvanised Steel	
Y	6	STREET LIGHTING	MANSEL STREET	GRIMSBY	528623.09	409910.95	1983		53227	1 Urbis LED	Axia 16 LED 500mA	28 Watts	6.00 Metres	Galvanised Steel	
Y	1	STREET LIGHTING	SPENCER STREET	GRIMSBY	528719.45	410267.89	2018	16/08/2018	67045	Urbis	Teceo 40 LED 500mA	64 Watts	8.00 Metres	Galvanised Steel	
Y	2	STREET LIGHTING	SPENCER STREET	GRIMSBY	528742.42	410245.36	2018	16/08/2018	67271	Urbis	Teceo 40 LED 500mA	64 Watts	8.00 Metres	Galvanised Steel	
Y	3	STREET LIGHTING	SPENCER STREET	GRIMSBY	528776.66	410239.84	2018	16/08/2018	67272	Urbis	Teceo 40 LED 500mA	64 Watts	8.00 Metres	Galvanised Steel	
Y	4	STREET LIGHTING	SPENCER STREET	GRIMSBY	528804.49	410216.21	2016	07/09/2016	68515	Urbis	Teceo 40 LED 500mA	64 Watts	8.00 Metres	Galvanised Steel	
Y	5	STREET LIGHTING	SPENCER STREET	GRIMSBY	528818	410209	2001		57459	Urbis	Axia 8 LED 350mA	10 Watts	6.00 Metres	Galvanised Steel	
Y	1	STREET LIGHTING	STIRLING STREET	GRIMSBY	528515.33	410300.15	2018	15/08/2018	67048	Urbis	Teceo 24 LED 500mA	40 Watts	8.00 Metres	Galvanised Steel	
Y	2	STREET LIGHTING	STIRLING STREET	GRIMSBY	528550.95	410282.62	2018	15/08/2018	67279	Urbis	Teceo 24 LED 500mA	40 Watts	8.00 Metres	Galvanised Steel	
Y	3	STREET LIGHTING	STIRLING STREET	GRIMSBY	528589.32	410253.05	2018	15/08/2018	67280	Urbis	Teceo 24 LED 500mA	40 Watts	8.00 Metres	Galvanised Steel	
Y	4	STREET LIGHTING	STIRLING STREET	GRIMSBY	528628.24	410245.37	2018	15/08/2018	68903	Urbis	Teceo 24 LED 500mA	40 Watts	8.00 Metres	Galvanised Steel	
Y	5	STREET LIGHTING	STIRLING STREET	GRIMSBY	528658.19	410221.05	2018	15/08/2018	68904	Urbis	Teceo 24 LED 500mA	40 Watts	8.00 Metres	Galvanised Steel	
Y	6	STREET LIGHTING	STIRLING STREET	GRIMSBY	528680.52	410226.7	1975		58489	1 Urbis LED	Teceo 24 LED 500mA	40 Watts	8.00 Metres	Galvanised Steel	
Y	7	STREET LIGHTING	STIRLING STREET	GRIMSBY	528690.9	410239.29	2016		58490	1 Urbis LED	Teceo 24 LED 500mA	40 Watts	8.00 Metres	Galvanised Steel	
Y	8	STREET LIGHTING	STIRLING STREET	GRIMSBY	528696.55	410274.21	2018	15/08/2018	68905	Urbis	Teceo 24 LED 500mA	40 Watts	8.00 Metres	Galvanised Steel	
Y	9	STREET LIGHTING	STIRLING STREET	GRIMSBY	528718.87	410294.54	2002		58492	1 Urbis LED	Teceo 24 LED 500mA	40 Watts	8.00 Metres	Galvanised Steel	
Y	2	STREET LIGHTING	MANGLE STREET	GRIMSBY	528477.87	410255.97	1993		53179	1 Urbis LED	Axia 16 LED 500mA	28 Watts	5.00 Metres	Galvanised Steel	
Y	1	STREET LIGHTING	THOROLD STREET	GRIMSBY	528249.83	410419.42	2018	18/10/2018	67135	Urbis	Teceo 40 LED 500mA	64 Watts	8.00 Metres	Galvanised Steel	
Y	2	STREET LIGHTING	THOROLD STREET	GRIMSBY	528288.01	410397.15	2018	18/10/2018	67285	Urbis	Teceo 40 LED 500mA	64 Watts	8.00 Metres	Galvanised Steel	
Y	3	STREET LIGHTING	THOROLD STREET	GRIMSBY	528322.82	410380.68	2018	18/10/2018	67286	Urbis	Teceo 40 LED 500mA	64 Watts	8.00 Metres	Galvanised Steel	
Y	4	STREET LIGHTING	THOROLD STREET	GRIMSBY	528358.71	410375.13	2008		59168	1 Urbis LED	Teceo 40 LED 500mA	64 Watts	8.00 Metres	Steel	
Y	5	STREET LIGHTING	THOROLD STREET	GRIMSBY	528390.75	410347.93	2018	18/10/2018	67287	Urbis	Teceo 40 LED 500mA	64 Watts	8.00 Metres	Galvanised Steel	
Y	6	STREET LIGHTING	THOROLD STREET	GRIMSBY	528430.61	410331.08	1958		59170	1 Urbis LED	Teceo 40 LED 500mA	64 Watts	8.00 Metres	Steel	
Y	7	STREET LIGHTING	THOROLD STREET	GRIMSBY	528453.82	410343.63	2018	18/10/2018	67288	Urbis	Teceo 40 LED 500mA	64 Watts	8.00 Metres	Galvanised Steel	
Y	8	STREET LIGHTING	THOROLD STREET	GRIMSBY	528459.06	410376.56	2018	18/10/2018	67289	Urbis	Teceo 40 LED 500mA	64 Watts	8.00 Metres	Galvanised Steel	
Y	9	STREET LIGHTING	THOROLD STREET	GRIMSBY	528488.52	410386.38	2008		59173	1 Urbis LED	Teceo 40 LED 500mA	64 Watts	8.00 Metres	Steel	
Y	10	STREET LIGHTING	THOROLD STREET	GRIMSBY	528513.78	410369.07	2018	18/10/2018	67290	Urbis	Teceo 40 LED 500mA	64 Watts	8.00 Metres	Galvanised Steel	
Y	11	STREET LIGHTING	THOROLD STREET	GRIMSBY	528622.25	410335.27	2018	18/10/2018	67291	Urbis	Teceo 40 LED 500mA	64 Watts	8.00 Metres	Galvanised Steel	
Y	12	STREET LIGHTING	THOROLD STREET	GRIMSBY	528570.78	410351.84	2018	18/10/2018	67292	Urbis	Teceo 40 LED 500mA	64 Watts	8.00 Metres	Galvanised Steel	
Y	13	STREET LIGHTING	THOROLD STREET	GRIMSBY	528599.51	410342.78	2018	18/10/2018	67293	Urbis	Teceo 40 LED 500mA	64 Watts	8.00 Metres	Galvanised Steel	
Y	14	STREET LIGHTING	THOROLD STREET	GRIMSBY	528632.85	410332.18	2018	18/10/2018	67294	Urbis	Teceo 40 LED 500mA	64 Watts	8.00 Metres	Galvanised Steel	
Y	15	STREET LIGHTING	THOROLD STREET	GRIMSBY	528666.65	410321.79	2018	18/10/2018	67295	Urbis	Teceo 40 LED 500mA	64 Watts	8.00 Metres	Galvanised Steel	
Y	16	STREET LIGHTING	THOROLD STREET	GRIMSBY	528699.56	410311.19	2018	18/10/2018	67296	Urbis	Teceo 40 LED 500mA	64 Watts	8.00 Metres	Galvanised Steel	
Y	17	STREET LIGHTING	THOROLD STREET	GRIMSBY	528734.69	410300.59	2018	18/10/2018	67297	Urbis	Teceo 40 LED 500mA	64 Watts	8.00 Metres	Galvanised Steel	
Y	18	STREET LIGHTING	THOROLD STREET	GRIMSBY	528763.85	410291.75	2018	18/10/2018	67298	Urbis	Teceo 40 LED 500mA	64 Watts	8.00 Metres	Galvanised Steel	
Y	19	STREET LIGHTING	THOROLD STREET	GRIMSBY	528795.44	410281.37	2018	18/10/2018	67299	Urbis	Teceo 40 LED 500mA	64 Watts	8.00 Metres	Galvanised Steel	
Y	20	STREET LIGHTING	THOROLD STREET	GRIMSBY	528825.43	410271.58	2008		59184	1 Urbis LED	Teceo 40 LED 500mA	64 Watts	8.00 Metres	Steel	
Y	21	STREET LIGHTING	THOROLD STREET	GRIMSBY	528853.97	410263.25	2018	18/10/2018	67300	Urbis	Teceo 40 LED 500mA	64 Watts	8.00 Metres	Galvanised Steel	
Y	1	STREET LIGHTING	TRINITY STREET	GRIMSBY	528272.99	410361.89	2014		59450	1 Urbis LED	Teceo 24 LED 500mA	40 Watts	6.00 Metres	Galvanised Steel	
Y	2	STREET LIGHTING	TRINITY STREET	GRIMSBY	528276.82	410418.23	1998		59451	1 Urbis LED	Teceo 32 LED 500mA	52 Watts	8.00 Metres	Galvanised Steel	
Y	3	STREET LIGHTING	TRINITY STREET	GRIMSBY	528295.81	410448.04	1998		59452	1 Urbis LED	Teceo 32 LED 500mA	52 Watts	8.00 Metres	Galvanised Steel	
Y	1	STREET LIGHTING	SEASCALE WALK	GRIMSBY	527925.06	409911.53	1968		56834	Urbis	Axia 8 LED 350mA	10 Watts	5.00 Metres	Galvanised Steel	
Y	2	STREET LIGHTING	SEASCALE WALK	GRIMSBY	527968.99	409902.35	2004		56835	Urbis	Axia 8 LED 350mA	10 Watts	6.00 Metres	Galvanised Steel	
Y	3	STREET LIGHTING	SEASCALE WALK	GRIMSBY	527996.87	409896.77	2012		56836	Urbis	Axia 8 LED 350mA	10 Watts	6.00 Metres	Steel	
Y	4	STREET LIGHTING	SEASCALE WALK	GRIMSBY	527997.21	409868.78	2012		56837	Urbis	Axia 8 LED 350mA	10 Watts	6.00 Metres	Steel	
Y	1	STREET LIGHTING	SALACON WAY	GRIMSBY	528304	410261	1996		56475	1 Urbis LED	Axia 16 LED 500mA	28 Watts	5.00 Metres	Galvanised Steel	
Y	2	STREET LIGHTING	SALACON WAY	GRIMSBY	528322.91	410267.15	1996		66807	1 Urbis LED	Axia 16 LED 500mA	28 Watts	5.00 Metres	Galvanised Steel	
Y	1	STREET LIGHTING	BRADMAN COURT	GRIMSBY	528294	410220	1995		44537	Urbis	Axia 16 LED 350mA	19 Watts	5.00 Metres	Galvanised Steel	
Y	2	STREET LIGHTING	BRADMAN COURT	GRIMSBY	528312	410212	1995		44538	Urbis	Axia 16 LED 350mA	19 Watts	5.00 Metres	Galvanised Steel	
Y	3	STREET LIGHTING	BRADMAN COURT	GRIMSBY	528331	410200	2007		44539	Urbis	Axia 16 LED 350mA	19 Watts	6.00 Metres	Steel	
Y	4	STREET LIGHTING	BRADMAN COURT	GRIMSBY	528326	410171	1995		44540	Urbis	Axia 16 LED 350mA	19 Watts	5.00 Metres	Galvanised Steel	
Y	1	STREET LIGHTING	NORFOLK COURT	GRIMSBY	528201.25	410136.05	2008		54189	Urbis	Axia 16 LED 350mA	19 Watts	6.00 Metres	Steel	
Y	2	STREET LIGHTING	NORFOLK COURT	GRIMSBY	528219.88	410129.36	2008		54190	Urbis	Axia 16 LED 350mA	19 Watts	6.00 Metres	Steel	
Y	3	STREET LIGHTING	NORFOLK COURT	GRIMSBY	528227.18	410166.26	2005		54191	Urbis	Axia 16 LED 350mA	19 Watts	6.00 Metres	Galvanised Steel	
Y	1	STREET LIGHTING	AMPLEFORTH AVENUE	GRIMSBY	524673.28	409801.53	2003		43158	Urbis	Axia 16 LED 350mA	19 Watts	6.00 Metres	Galvanised Steel	
Y	2	STREET LIGHTING	AMPLEFORTH AVENUE	GRIMSBY	524667.33	409770.46	2011	30/03/2011	43159	Urbis	Axia 16 LED 350mA	19 Watts	6.00 Metres	Steel	
Y	3	STREET LIGHTING	AMPLEFORTH AVENUE	GRIMSBY	524656.11	409731.84	2021	25/06/2021	68555	Urbis	AXIA 16 LED 390mA	21 Watts	6.00 Metres	Steel	
Y	4	STREET LIGHTING	AMPLEFORTH AVENUE	GRIMSBY	524646.33	409691.51	2021	25/06/2021	68633	Urbis	AXIA 16 LED 390mA	21 Watts	6.00 Metres	Steel	
Y	5	STREET LIGHTING	AMPLEFORTH AVENUE	GRIMSBY	524633.24	409655.2	1968		43162	Urbis	Axia 8 LED 350mA	10 Watts	5.00 Metres	Galvanised Steel	
Y	6	STREET LIGHTING	AMPLEFORTH AVENUE	GRIMSBY	524619.68	409615.32	2021	25/06/2021	68634	Urbis	AXIA 16 LED 390mA	21 Watts	6.00 Metres	Steel	
Y	7	STREET LIGHTING	AMPLEFORTH AVENUE	GRIMSBY	524578	409590.8	2021	25/06/2021	68635	Urbis	AXIA 16 LED 390mA	21 Watts	6.00 Metres	Steel	
Y	8	STREET LIGHTING	AMPLEFORTH AVENUE	GRIMSBY	524550.38	409570.86	2005		43165	Urbis	Axia 8 LED 350mA	10 Watts	6.00 Metres	Galvanised Steel	
Y	9	STREET LIGHTING	AMPLEFORTH AVENUE	GRIMSBY	524526.5	409562.84	2021	25/06/2021	68636	Urbis	AXIA 16 LED 390mA	21 Watts	6.00 Metres	Steel	
Y	10	STREET LIGHTING	AMPLEFORTH AVENUE	GRIMSBY	524501.02	409544.79	2008		43167	Urbis	Axia 8 LED 350mA	10 Watts	6.00 Metres	Galvanised Steel	
Y	11	STREET LIGHTING	AMPLEFORTH AVENUE	GRIMSBY	524465.19	409526.06	2005		43168	Urbis	Axia 8 LED 350mA	10 Watts	6.00 Metres	Galvanised Steel	
Y	1	STREET LIGHTING	BADER CLOSE	GRIMSBY	524354.35	409758.41	1995		43567	Urbis	Axia 16 LED 350mA	19 Watts	6.00 Metres	Galvanised Steel	
Y	1	STREET LIGHTING	BINBROOK WAY	GRIMSBY	524292.91	409697.95	1997		44142	Urbis	Axia 16 LED 350mA	19 Watts	6.00 Metres	Galvanised Steel	
Y	2	STREET LIGHTING	BINBROOK WAY	GRIMSBY	524264.74	409671.25	1969		44143	Urbis	Axia 16 LED 350mA	19 Watts	5.00 Metres	Aluminium	
Y	3	STREET LIGHTING	BINBROOK WAY	GRIMSBY	524233.81	409644.37	1969		44144	Urbis	Axia 16 LED 350mA	19 Watts	5.00 Metres	Aluminium	
Y	4	STREET LIGHTING	BINBROOK WAY	GRIMSBY	524209.33	409620.73	2011		44145	Urbis	Axia 16 LED 350mA	19 Watts	6.00 Metres	Galvanised Steel	
Y	5	STREET LIGHTING	BINBROOK WAY	GRIMSBY	524181.15	409600.92	2009		44146	Urbis	Axia 16 LED 350mA	19 Watts	6.00 Metres	Galvanised Steel	
Y	6	STREET LIGHTING	BINBROOK WAY	GRIMSBY	524152.1	409635.45	2005		44147	Urbis	Axia 16 LED 350mA	19 Watts	6.00 Metres	Galvanised Steel	
Y	7	STREET LIGHTING	BINBROOK WAY	GRIMSBY	524129.78	409661.5	2006		44148	Urbis	Axia 16 LED 350mA	19 Watts	6.00 Metres	Galvanised Steel	
Y	8	STREET LIGHTING	BINBROOK WAY	GRIMSBY	524110.48	409685.32	2018	13/08/2018	66979	Urbis	Axia 16 LED 350mA	19 Watts	6.00 Metres	Steel	
Y	1	STREET LIGHTING	BRANSDALE WAY	GRIMSBY	524439.91	409599.32	2012		44571	Urbis	Axia 8 LED 350mA	10 Watts	6.00 Metres	Steel	
Y	2	STREET LIGHTING	BRANSDALE WAY	GRIMSBY	524441.27	409576.82	2012		44572	Urbis	Axia 8 LED 350mA	10 Watts	6.00 Metres	Steel	

Y	3	STREET LIGHTING	BRANSDALE WAY	GRIMSBY	524441.9	409553.34	2012		44573	Urbis	Axia 8 LED 350mA	10 Watts	6.00 Metres	Steel	
Y	4	STREET LIGHTING	BRANSDALE WAY	GRIMSBY	524439.62	409533.39	2012		44574	Urbis	Axia 8 LED 350mA	10 Watts	6.00 Metres	Steel	
Y	5	STREET LIGHTING	BRANSDALE WAY	GRIMSBY	524440.13	409514.08	2012		44575	Urbis	Axia 8 LED 350mA	10 Watts	6.00 Metres	Steel	
Y	1	STREET LIGHTING	BUCKFAST CLOSE	GRIMSBY	524145.85	410006.03	1963		44892	Urbis	Axia 16 LED 350mA	19 Watts	5.00 Metres	Aluminium	
Y	2	STREET LIGHTING	BUCKFAST CLOSE	GRIMSBY	524191.93	409997.86	1963		44893	Urbis	Axia 16 LED 350mA	19 Watts	5.00 Metres	Aluminium	
Y	1	STREET LIGHTING	BYLAND GROVE	GRIMSBY	524035.72	410188.49	1994		45036	Urbis	Axia 16 LED 350mA	19 Watts	5.00 Metres	Galvanised Steel	
Y	2	STREET LIGHTING	BYLAND GROVE	GRIMSBY	524073.65	410178.18	2013		45037	Urbis	Axia 16 LED 350mA	19 Watts	6.00 Metres	Galvanised Steel	
Y	3	STREET LIGHTING	BYLAND GROVE	GRIMSBY	524053.4	410161.15	1994		45038	Urbis	Axia 16 LED 350mA	19 Watts	5.00 Metres	Galvanised Steel	
Y	4	STREET LIGHTING	BYLAND GROVE	GRIMSBY	524030.93	410148.08	1994		45039	Urbis	Axia 16 LED 350mA	19 Watts	5.00 Metres	Galvanised Steel	
Y	5	STREET LIGHTING	BYLAND GROVE	GRIMSBY	524002.95	410126.81	1994		45040	Urbis	Axia 16 LED 350mA	19 Watts	5.00 Metres	Galvanised Steel	
Y	6	STREET LIGHTING	BYLAND GROVE	GRIMSBY	524070.7	410137.59	1994		45041	Urbis	Axia 16 LED 350mA	19 Watts	5.00 Metres	Galvanised Steel	
Y	7	STREET LIGHTING	BYLAND GROVE	GRIMSBY	524018.41	410100.21	1994		45042	Urbis	Axia 16 LED 350mA	19 Watts	5.00 Metres	Galvanised Steel	
Y	8	STREET LIGHTING	BYLAND GROVE	GRIMSBY	524085.25	410116.68	1994		45043	Urbis	Axia 16 LED 350mA	19 Watts	5.00 Metres	Galvanised Steel	
Y	9	STREET LIGHTING	BYLAND GROVE	GRIMSBY	524058.74	410096.16	1994		45044	Urbis	Axia 16 LED 350mA	19 Watts	5.00 Metres	Galvanised Steel	
Y	10	STREET LIGHTING	BYLAND GROVE	GRIMSBY	524029.65	410078.02	1994		45045	Urbis	Axia 16 LED 350mA	19 Watts	5.00 Metres	Galvanised Steel	
Y	11	STREET LIGHTING	BYLAND GROVE	GRIMSBY	524106.42	410096.71	1994		45046	Urbis	Axia 16 LED 350mA	19 Watts	5.00 Metres	Galvanised Steel	
Y	12	STREET LIGHTING	BYLAND GROVE	GRIMSBY	524122.63	410073.05	1994		45047	Urbis	Axia 16 LED 350mA	19 Watts	5.00 Metres	Galvanised Steel	
Y	1	STREET LIGHTING	CAMPBELL GROVE	GRIMSBY	524446.12	409850.67	1995		45179	Urbis	Axia 16 LED 350mA	19 Watts	6.00 Metres	Galvanised Steel	
Y	2	STREET LIGHTING	CAMPBELL GROVE	GRIMSBY	524440.3	409817.95	1995		45180	Urbis	Axia 16 LED 350mA	19 Watts	6.00 Metres	Galvanised Steel	
Y	3	STREET LIGHTING	CAMPBELL GROVE	GRIMSBY	524460.47	409795.53	2008		45181	Urbis	Axia 16 LED 350mA	19 Watts	6.00 Metres	Steel	
Y	4	STREET LIGHTING	CAMPBELL GROVE	GRIMSBY	524416.5	409812.54	2011		45182	Urbis	Axia 16 LED 350mA	19 Watts	6.00 Metres	Steel	
Y	5	STREET LIGHTING	CAMPBELL GROVE	GRIMSBY	524383.97	409820.51	2011		45183	Urbis	Axia 16 LED 350mA	19 Watts	6.00 Metres	Steel	
Y	6	STREET LIGHTING	CAMPBELL GROVE	GRIMSBY	524353.26	409837.62	2007		45184	Urbis	Axia 16 LED 350mA	19 Watts	6.00 Metres	Steel	
Y	7	STREET LIGHTING	CAMPBELL GROVE	GRIMSBY	524319.85	409847.94	2008		45185	Urbis	Axia 16 LED 350mA	19 Watts	6.00 Metres	Steel	
Y	1	STREET LIGHTING	CHESHIRE WALK	GRIMSBY	524317.52	409904.7	2011		45817	Urbis	Axia 16 LED 350mA	19 Watts	6.00 Metres	Steel	
Y	2	STREET LIGHTING	CHESHIRE WALK	GRIMSBY	524309.99	409872.92	2011		45818	Urbis	Axia 16 LED 350mA	19 Watts	6.00 Metres	Steel	
Y	3	STREET LIGHTING	CHESHIRE WALK	GRIMSBY	524282.32	409838.39	1989		45819	Urbis	Axia 16 LED 350mA	19 Watts	5.00 Metres	Galvanised Steel	
Y	4	STREET LIGHTING	CHESHIRE WALK	GRIMSBY	524294.21	409812.51	1963		45820	Urbis	Axia 16 LED 350mA	19 Watts	5.00 Metres	Aluminium	
Y	5	STREET LIGHTING	CHESHIRE WALK	GRIMSBY	524278.01	409793.71	2009		45821	Urbis	Axia 16 LED 350mA	19 Watts	6.00 Metres	Steel	
Y	6	STREET LIGHTING	CHESHIRE WALK	GRIMSBY	524248.77	409737.13	1963		45822	Urbis	Axia 16 LED 350mA	19 Watts	5.00 Metres	Aluminium	
Y	7	STREET LIGHTING	CHESHIRE WALK	GRIMSBY	524224.65	409724.61	1963		45823	Urbis	Axia 16 LED 350mA	19 Watts	5.00 Metres	Aluminium	
Y	8	STREET LIGHTING	CHESHIRE WALK	GRIMSBY	524204.21	409718.99	2007		45824	Urbis	Axia 16 LED 350mA	19 Watts	6.00 Metres	Galvanised Steel	
Y	9	STREET LIGHTING	CHESHIRE WALK	GRIMSBY	524181.93	409705.55	1963		45825	Urbis	Axia 16 LED 350mA	19 Watts	5.00 Metres	Aluminium	
Y	10	STREET LIGHTING	CHESHIRE WALK	GRIMSBY	524157.81	409679.5	2007		45826	Urbis	Axia 16 LED 350mA	19 Watts	6.00 Metres	Galvanised Steel	
Y	1	STREET LIGHTING	CRANWELL DRIVE	GRIMSBY	524550.69	410062.64	2019	04/10/2019	67520	Urbis	Axia 16 LED 350mA	19 Watts	6.00 Metres	Galvanised Steel	
Y	2	STREET LIGHTING	CRANWELL DRIVE	GRIMSBY	524588.08	410070.02	1963		46869	Urbis	Axia 16 LED 350mA	19 Watts	5.00 Metres	Steel	
Y	3	STREET LIGHTING	CRANWELL DRIVE	GRIMSBY	524624.43	410052.26	2021	05/08/2021	68599	Urbis	Axia 16 LED 350mA	19 Watts	6.00 Metres	Galvanised Steel	
Y	4	STREET LIGHTING	CRANWELL DRIVE	GRIMSBY	524657.07	410036.28	1963		46871	Urbis	Axia 16 LED 350mA	19 Watts	5.00 Metres	Steel	
Y	5	STREET LIGHTING	CRANWELL DRIVE	GRIMSBY	524674.32	409997.25	2024	06/08/2024	69960	Urbis	Axia 16 LED 350mA	19 Watts	6.00 Metres	Galvanised Steel	
Y	6	STREET LIGHTING	CRANWELL DRIVE	GRIMSBY	524667.01	409963.84	1963		46873	Urbis	Axia 16 LED 350mA	19 Watts	5.00 Metres	Steel	
Y	7	STREET LIGHTING	CRANWELL DRIVE	GRIMSBY	524682.2	409928.33	1963		46874	Urbis	Axia 16 LED 350mA	19 Watts	5.00 Metres	Steel	
Y	8	STREET LIGHTING	CRANWELL DRIVE	GRIMSBY	524582.13	410040.97	1963		46875	Urbis	Axia 8 LED 350mA	10 Watts	5.00 Metres	Steel	
Y	9	STREET LIGHTING	CRANWELL DRIVE	GRIMSBY	524600.6	410023.32	2021	02/09/2021	68600	Urbis	Axia 8 LED 350mA	10 Watts	6.00 Metres	Galvanised Steel	
Y	10	STREET LIGHTING	CRANWELL DRIVE	GRIMSBY	524624.04	410026.36	2021	02/09/2021	68847	Urbis	Axia 8 LED 350mA	10 Watts	6.00 Metres	Galvanised Steel	
Y	11	STREET LIGHTING	CRANWELL DRIVE	GRIMSBY	524636.57	410013.01	2021	02/09/2021	68848	Urbis	Axia 8 LED 350mA	10 Watts	6.00 Metres	Galvanised Steel	
Y	12	STREET LIGHTING	CRANWELL DRIVE	GRIMSBY	524651.24	409979.06	1963		46879	Urbis	Axia 16 LED 350mA	19 Watts	5.00 Metres	Steel	
Y	1	STREET LIGHTING	EGTON WAY	GRIMSBY	524452.78	409952.13	1997		47870	1 Urbis LED	Axia 16 LED 500mA	28 Watts	5.00 Metres	Galvanised Steel	
Y	2	STREET LIGHTING	EGTON WAY	GRIMSBY	524425.35	409957.19	1997		47871	Urbis	Axia 16 LED 350mA	19 Watts	5.00 Metres	Galvanised Steel	
Y	3	STREET LIGHTING	EGTON WAY	GRIMSBY	524402.15	409963.91	2002		47872	Urbis	Axia 16 LED 350mA	19 Watts	6.00 Metres	Steel	
Y	4	STREET LIGHTING	EGTON WAY	GRIMSBY	524375.27	409972.38	1963		47873	Urbis	Axia 16 LED 350mA	19 Watts	5.00 Metres	Stainless Steel	
Y	1	STREET LIGHTING	FOUNTAINS AVENUE	GRIMSBY	524055.19	410032.77	1963		48897	Urbis	Axia 8 LED 350mA	10 Watts	5.00 Metres	Aluminium	
Y	2	STREET LIGHTING	FOUNTAINS AVENUE	GRIMSBY	524085.2	410029.18	1963		48898	Urbis	Axia 8 LED 350mA	10 Watts	5.00 Metres	Aluminium	
Y	3	STREET LIGHTING	FOUNTAINS AVENUE	GRIMSBY	524113.74	410048.42	1963		48899	Urbis	Axia 8 LED 350mA	10 Watts	5.00 Metres	Aluminium	
Y	4	STREET LIGHTING	FOUNTAINS AVENUE	GRIMSBY	524134.18	410062.78	2014		48900	Urbis	Axia 8 LED 350mA	10 Watts	6.00 Metres	Galvanised Steel	
Y	5	STREET LIGHTING	FOUNTAINS AVENUE	GRIMSBY	524160.88	410081.74	1963		48901	Urbis	Axia 8 LED 350mA	10 Watts	5.00 Metres	Aluminium	
Y	6	STREET LIGHTING	FOUNTAINS AVENUE	GRIMSBY	524148.54	410125.29	2007		48902	Urbis	Axia 8 LED 350mA	10 Watts	6.00 Metres	Steel	
Y	7	STREET LIGHTING	FOUNTAINS AVENUE	GRIMSBY	524182.05	410096.66	1963		48903	Urbis	Axia 8 LED 350mA	10 Watts	5.00 Metres	Steel	
Y	8	STREET LIGHTING	FOUNTAINS AVENUE	GRIMSBY	524149.28	410154.43	2023	14/02/2023	69039	Urbis	Axia 8 LED 350mA	10 Watts	6.00 Metres	Steel	
Y	1	STREET LIGHTING	HILLARY WAY	GRIMSBY	524213.59	409828.71	1996		50804	1 Urbis LED	Teceo 40 LED 500mA	64 Watts	8.00 Metres	Galvanised Steel	
Y	2	STREET LIGHTING	HILLARY WAY	GRIMSBY	524233.85	409806.94	1975		50805	1 Urbis LED	Teceo 40 LED 500mA	64 Watts	8.00 Metres	Steel	
Y	3	STREET LIGHTING	HILLARY WAY	GRIMSBY	524247.9	409777.82	1975		50806	1 Urbis LED	Teceo 40 LED 500mA	64 Watts	8.00 Metres	Steel	
Y	4	STREET LIGHTING	HILLARY WAY	GRIMSBY	524273.59	409760.67	1975		50807	1 Urbis LED	Teceo 40 LED 500mA	64 Watts	8.00 Metres	Steel	
Y	1	STREET LIGHTING	INGLEBY GROVE	GRIMSBY	524504.06	409603.53	2010		51291	WRTL	Other	21 Watts	6.00 Metres	Steel	
Y	2	STREET LIGHTING	INGLEBY GROVE	GRIMSBY	524516.3	409579.79	2010		51292	WRTL	Other	21 Watts	6.00 Metres	Steel	
Y	1	STREET LIGHTING	LOFT AVENUE	GRIMSBY	524534.59	409846.54	1963		52742	Urbis	Axia 8 LED 350mA	10 Watts	5.00 Metres	Aluminium	
Y	2	STREET LIGHTING	LOFT AVENUE	GRIMSBY	524521.81	409811.36	1963		52743	Urbis	Axia 8 LED 350mA	10 Watts	5.00 Metres	Aluminium	
Y	3	STREET LIGHTING	LOFT AVENUE	GRIMSBY	524493.84	409822.18	1963		52744	Urbis	Axia 8 LED 350mA	10 Watts	5.00 Metres	Aluminium	
Y	4	STREET LIGHTING	LOFT AVENUE	GRIMSBY	524485.53	409787.49	2011		52745	Urbis	Axia 8 LED 350mA	10 Watts	6.00 Metres	Steel	
Y	5	STREET LIGHTING	LOFT AVENUE	GRIMSBY	524473.59	409757.12	2013		52746	Urbis	Axia 8 LED 350mA	10 Watts	6.00 Metres	Galvanised Steel	
Y	6	STREET LIGHTING	LOFT AVENUE	GRIMSBY	524501.94	409722.76	1995		52747	Urbis	Axia 8 LED 350mA	10 Watts	6.00 Metres	Galvanised Steel	
Y	7	STREET LIGHTING	LOFT AVENUE	GRIMSBY	524528.78	409743.07	1963		52748	Urbis	Axia 8 LED 350mA	10 Watts	5.00 Metres	Aluminium	
Y	8	STREET LIGHTING	LOFT AVENUE	GRIMSBY	524552.45	409711.18	1963		52749	Urbis	Axia 8 LED 350mA	10 Watts	5.00 Metres	Aluminium	
Y	1	STREET LIGHTING	MATLOCK DRIVE	GRIMSBY			2024	26/09/2024	69996	Urbis	Axia 16 LED 350mA	19 Watts	6.00 Metres	Galvanised Steel	
Y	2	STREET LIGHTING	MATLOCK DRIVE	GRIMSBY	524737.43	409890.67	1963		53416	Urbis	Axia 16 LED 350mA	19 Watts	5.00 Metres	Steel	
Y	3	STREET LIGHTING	MATLOCK DRIVE	GRIMSBY	524774.52	409881.87	1963		53417	Urbis	Axia 16 LED 350mA	19 Watts	5.00 Metres	Steel	
Y	4	STREET LIGHTING	MATLOCK DRIVE	GRIMSBY			2024	01/10/2024	70028	Urbis	Axia 16 LED 350mA	19 Watts	6.00 Metres	Galvanised Steel	
Y	5	STREET LIGHTING	MATLOCK DRIVE	GRIMSBY	524712.97	409899.6	2021	05/08/2021	68601	Urbis	Axia 8 LED 350mA	10 Watts	6.00 Metres	Steel	
Y	6	STREET LIGHTING	MATLOCK DRIVE	GRIMSBY	524746.69	409862.59	1963		53420	Urbis	Axia 16 LED 350mA	19 Watts	5.00 Metres	Steel	
Y	7	STREET LIGHTING	MATLOCK DRIVE	GRIMSBY	524776.14	409850.08	2021	05/08/2021	68850	Urbis	Axia 8 LED 350mA	10 Watts	6.00 Metres	Steel	
Y	8	STREET LIGHTING	MATLOCK DRIVE	GRIMSBY	524745.91	409910.92	2021	05/10/2021	68697	Urbis	Axia 16 LED 350mA	19 Watts	6.00 Metres	Galvanised Steel	
Y	9	STREET LIGHTING	MATLOCK DRIVE	GRIMSBY	524762.62	409919.27	1963		53423	Urbis	Axia 8 LED 350mA	10 Watts	5.00 Metres	Steel	
Y	10	STREET LIGHTING	MATLOCK DRIVE	GRIMSBY	524786.04	409925.16	2013		53424	Urbis	Axia 8 LED 350mA	10 Watts	6.00 Metres	Steel	
Y	1	STREET LIGHTING	HEMSWELL DRIVE	GRIMSBY	524685.99	410019.84	1974		50483	Urbis	Axia 16 LED 350mA	19 Watts	5.00 Metres	Steel	
Y	2	STREET LIGHTING	HEMSWELL DRIVE	GRIMSBY	524727.51	409998.07	1974		50484	Urbis	Axia 16 LED 350mA	19 Watts	5.00 Metres	Steel	
Y	3	STREET LIGHTING	HEMSWELL DRIVE	GRIMSBY	524758.77	409971.54	1974		50485	Urbis	Axia 16 LED 350mA	19 Watts	5.00 Metres	Steel	
Y	4	STREET LIGHTING	HEMSWELL DRIVE	GRIMSBY	524788.78	409963.37	2024	06/08/2024	69962	Urbis	Axia 16 LED 350mA	19 Watts	6.00 Metres	Steel	
Y	5	STREET LIGHTING	HEMSWELL DRIVE	GRIMSBY	524748.63	409938.7	2021	05/10/2021	68698	Urbis	Axia 16 LED 350mA	19 Watts	6.00 Metres	Galvanised Steel	
Y	1	STREET LIGHTING	MULGRAVE CLOSE	GRIMSBY	524632.35	409722.18	2003		53909	Urbis	Axia 16 LED 350mA	19 Watts	6.00 Metres	Galvanised Steel	
Y	2	STREET LIGHTING	MULGRAVE CLOSE	GRIMSBY	524637.54	409754.94	2011		53910	Urbis	Axia 16 LED 350mA	19 Watts	6.00 Metres	Steel	
Y	1	STREET LIGHTING	PERKINS CLOSE	GRIMSBY	524708.02	409963.95	1963		55304	1 Urbis LED	Teceo 24 LED 500mA	40 Watts	5.00 Metres	Steel	
Y	2	STREET LIGHTING	PERKINS CLOSE	GRIMSBY	524729.43	409935.57	2012		55305	Urbis	Axia 8 LED 350mA	10 Watts	6.00 Metres	Steel	
Y	1	STREET LIGHTING	QUEENSWAY	GRIMSBY	524621.66	409839.05	1967		55833	1 Urbis LED	Teceo 48 LED 500mA	79 Watts	8.00 Metres	Steel	
Y	2	STREET LIGHTING	QUEENSWAY	GRIMSBY					70232						
Y	3	STREET LIGHTING	QUEENSWAY	GRIMSBY	524609.61	409779.77	2004		55835	1 Urbis LED	Teceo 48 LED 500mA	79 Watts	8.00 Metres	Stainless Steel	
Y	4	STREET LIGHTING	QUEENSWAY	GRIMSBY	524595.18	409751.48	1967		55836	1 Urbis LED	Teceo 48 LED 500mA	79 Watts	8.00 Metres	Steel	
Y	5	STREET LIGHTING	QUEENSWAY	GRIMSBY	524595.88	409714.69	1967		55837	1 Urbis LED	Teceo 48 LED 500mA	79 Watts	8.00 Metres	Steel	
Y	6	STREET LIGHTING	QUEENSWAY	GRIMSBY	524582.62	409684.59	1967		55838	1 Urbis LED	Teceo 48 LED 500mA	79 Watts	8.00 Metres	Steel	
Y	7	STREET LIGHTING	QUEENSWAY	GRIMSBY	524556.08	409659.14	2021	14/10/2021	68751	Urbis	Teceo 48 LED 500mA	79 Watts	8.00 Metres	Galvanised Steel	
Y	8	STREET LIGHTING	QUEENSWAY	GRIMSBY					70233						
Y	10	STREET LIGHTING	QUEENSWAY	GRIMSBY	524453.18	409604.31	1978		55842	1 Urbis LED	Teceo 48 LED 500mA	79 Watts	8.00 Metres	Galvanised Steel	
Y	11	STREET LIGHTING	QUEENSWAY	GRIMSBY	524423.36	409600.91	2012		55843	1 Urbis LED	Teceo 48 LED 500mA	79 Watts	8.00 Metres	Steel	
Y	12	STREET LIGHTING	QUEENSWAY	GRIMSBY	524397.21	409607.35	1978		55844	1 Urbis LED	Teceo 48 LED 500mA	79 Watts	8.00 Metres	Galvanised Steel	
Y	13	STREET LIGHTING	QUEENSWAY	GRIMSBY	524378.25	409623.09	1978		55845	1 Urbis LED	Teceo 48 LED 500mA	79 Watts	8.00 Metres	Galvanised Steel	
Y	15	STREET LIGHTING	QUEENSWAY	GRIMSBY	524328.72	409681.09	1967		55847	1 Urbis LED	Teceo 48 LED 500mA	79 Watts	8.00 Metres	Steel	
Y	17	STREET LIGHTING	QUEENSWAY	GRIMSBY	524296.03	409737.79	2019	12/11/2019	67642	Urbis	Teceo 32 LED 500mA	52 Watts	8.00 Metres	Galvanised Steel	
Y	1	STREET LIGHTING	RAVENSCAR ROAD	GRIMSBY	524398.95	410144.66	1963		55924	Urbis	Axia 16 LED 350mA	19 Watts	5.00 Metres	Galvanised Steel	
Y	2	STREET LIGHTING	RAVENSCAR ROAD	GRIMSBY	524380.85	410127.38	1963		55925	Urbis	Axia 16 LED 350mA	19 Watts	5.00 Metres	Aluminium	
Y	3	STREET LIGHTING	RAVENSCAR ROAD	GRIMSBY	524375.03	410098.39	1997		55926	Urbis	Axia 16 LED 350mA	19 Watts	5.00 Metres	Galvanised Steel	
Y	4	STREET LIGHTING	RAVENSCAR ROAD	GRIMSBY	524408.19	410108.14	2013		55927	Urbis	Axia 16 LED 350mA	19 Watts	6.00 Metres	Galvanised Steel	
Y	5	STREET LIGHTING	RAVENSCAR ROAD	GRIMSBY	524372.62	410164.47	1963		55928	Urbis	Axia 16 LED 350mA	19 Watts	5.00 Metres	Aluminium	

Y	6	STREET LIGHTING	RAVENSCAR ROAD	GRIMSBY	524358.45	410137.19	1997		55929	Urbis	Axia 16 LED 350mA	19 Watts	5.00 Metres	Galvanised Steel	
Y	7	STREET LIGHTING	RAVENSCAR ROAD	GRIMSBY	524349.96	410114.4	1963		55930	Urbis	Axia 16 LED 350mA	19 Watts	5.00 Metres	Steel	
Y	8	STREET LIGHTING	RAVENSCAR ROAD	GRIMSBY	524422.37	410136.05	2014		55931	Urbis	Axia 16 LED 350mA	19 Watts	6.00 Metres	Galvanised Steel	
Y	1	STREET LIGHTING	ST CHADS GATE	GRIMSBY	524445.04	410120.38	2013		57621	Urbis	Axia 8 LED 350mA	10 Watts	6.00 Metres	Steel	
Y	2	STREET LIGHTING	ST CHADS GATE	GRIMSBY	524434.47	410100.13	2013		57622	Urbis	Axia 8 LED 350mA	10 Watts	6.00 Metres	Steel	
Y	3	STREET LIGHTING	ST CHADS GATE	GRIMSBY	524424.89	410075.32	2013		57623	Urbis	Axia 8 LED 350mA	10 Watts	6.00 Metres	Steel	
Y	4	STREET LIGHTING	ST CHADS GATE	GRIMSBY	524463.58	410103.75	2008		57624	Urbis	Axia 8 LED 350mA	10 Watts	6.00 Metres	Steel	
Y	1	STREET LIGHTING	SCOTT CLOSE	GRIMSBY	524660.81	409904.13	1963		56768	Urbis	Axia 16 LED 350mA	19 Watts	5.00 Metres	Steel	
Y	2	STREET LIGHTING	SCOTT CLOSE	GRIMSBY	524640.53	409880.48			67519	Urbis	Axia 8 LED 350mA	10 Watts	6.00 Metres	Steel	
Y	3	STREET LIGHTING	SCOTT CLOSE	GRIMSBY			2024	01/10/2024	70029	Urbis	Axia 16 LED 350mA	19 Watts	6.00 Metres	Steel	
Y	4	STREET LIGHTING	SCOTT CLOSE	GRIMSBY	524645.16	409921.1	1963		56771	Urbis	Axia 16 LED 350mA	19 Watts	5.00 Metres	Steel	
Y	5	STREET LIGHTING	SCOTT CLOSE	GRIMSBY			2024	18/10/2024	69995	Urbis	Axia 16 LED 350mA	19 Watts	6.00 Metres	Steel	
Y	6	STREET LIGHTING	SCOTT CLOSE	GRIMSBY	524602.26	409912.68	2021	05/08/2021	68602	Urbis	Axia 8 LED 350mA	10 Watts	6.00 Metres	Steel	
Y	7	STREET LIGHTING	SCOTT CLOSE	GRIMSBY	524611.37	409958.94	2021	05/08/2021	68851	Urbis	Axia 8 LED 350mA	10 Watts	6.00 Metres	Steel	
Y	8	STREET LIGHTING	SCOTT CLOSE	GRIMSBY	524616.63	409992.67	2012		56775	Urbis	Axia 8 LED 350mA	10 Watts	6.00 Metres	Steel	
Y	1	STREET LIGHTING	SOUTHLAND WAY	GRIMSBY	524476.14	409907.66	2001		57427	Urbis	Axia 8 LED 350mA	10 Watts	6.00 Metres	Galvanised Steel	
Y	2	STREET LIGHTING	SOUTHLAND WAY	GRIMSBY	524474.75	409940.57	1998		57428	Urbis	Axia 8 LED 350mA	10 Watts	5.00 Metres	Galvanised Steel	
Y	3	STREET LIGHTING	SOUTHLAND WAY	GRIMSBY	524473	409960	2010	31/03/2010	57429	Urbis	Axia 8 LED 350mA	10 Watts	6.00 Metres	Galvanised Steel	
Y	4	STREET LIGHTING	SOUTHLAND WAY	GRIMSBY					67815	Urbis	Axia 8 LED 350mA	10 Watts	6.00 Metres	Steel	
Y	1	STREET LIGHTING	WHITGIFT WAY	GRIMSBY	524407.26	409776.45	1963		60668	Urbis	Axia 16 LED 350mA	19 Watts	5.00 Metres	Aluminium	
Y	2	STREET LIGHTING	WHITGIFT WAY	GRIMSBY	524396.88	409743.09	1963		60669	Urbis	Axia 16 LED 350mA	19 Watts	5.00 Metres	Aluminium	
Y	3	STREET LIGHTING	WHITGIFT WAY	GRIMSBY	524386.62	409721.38	1963		60670	Urbis	Axia 16 LED 350mA	19 Watts	5.00 Metres	Aluminium	
Y	4	STREET LIGHTING	WHITGIFT WAY	GRIMSBY	524381.56	409686.83	1963		60671	Urbis	Axia 16 LED 350mA	19 Watts	5.00 Metres	Aluminium	
Y	5	STREET LIGHTING	WHITGIFT WAY	GRIMSBY	524408.02	409708.54	1963		60672	Urbis	Axia 16 LED 350mA	19 Watts	5.00 Metres	Galvanised Steel	
Y	6	STREET LIGHTING	WHITGIFT WAY	GRIMSBY	524443.59	409667.02	2013	17/09/2013	60673	Urbis	Axia 16 LED 350mA	19 Watts	6.00 Metres	Steel	
Y	1	STREET LIGHTING	STOKESLEY WALK	GRIMSBY	524572.03	409658.66	1963		58499	Urbis	Axia 8 LED 350mA	10 Watts	5.00 Metres	Steel	
Y	2	STREET LIGHTING	STOKESLEY WALK	GRIMSBY	524585.7	409635.68	1963		58500	Urbis	Axia 8 LED 350mA	10 Watts	5.00 Metres	Steel	
Y	1	STREET LIGHTING	TINTERN WALK	GRIMSBY	524170.96	410250.11	2021	29/07/2021	68590	Urbis	Axia 16 LED 350mA	19 Watts	6.00 Metres	Steel	
Y	2	STREET LIGHTING	TINTERN WALK	GRIMSBY	524143.79	410234.42	2021	29/07/2021	68670	Urbis	Axia 16 LED 350mA	19 Watts	6.00 Metres	Steel	
Y	3	STREET LIGHTING	TINTERN WALK	GRIMSBY	524122.5	410212.57	2021	29/07/2021	68671	Urbis	Axia 16 LED 350mA	19 Watts	6.00 Metres	Steel	
Y	4	STREET LIGHTING	TINTERN WALK	GRIMSBY	524152.19	410221.26	2021	29/07/2021	68672	Urbis	Axia 16 LED 350mA	19 Watts	6.00 Metres	Steel	
Y	5	STREET LIGHTING	TINTERN WALK	GRIMSBY	524170.33	410193.56	2021	29/07/2021	68673	Urbis	Axia 16 LED 350mA	19 Watts	6.00 Metres	Steel	
Y	6	STREET LIGHTING	TINTERN WALK	GRIMSBY	524188.34	410167.19	2021	29/07/2021	68674	Urbis	Axia 16 LED 350mA	19 Watts	6.00 Metres	Steel	
Y	7	STREET LIGHTING	TINTERN WALK	GRIMSBY	524202.91	410173.7	2021	02/08/2021	68595	Urbis	Axia 8 LED 350mA	10 Watts	6.00 Metres	Steel	
Y	8	STREET LIGHTING	TINTERN WALK	GRIMSBY	524245.75	410202.89	2021	02/08/2021	68668	Urbis	Axia 8 LED 350mA	10 Watts	6.00 Metres	Steel	
Y	9	STREET LIGHTING	TINTERN WALK	GRIMSBY	524201.07	410149.23	2021	29/07/2021	68676	Urbis	Axia 16 LED 350mA	19 Watts	6.00 Metres	Steel	
Y	10	STREET LIGHTING	TINTERN WALK	GRIMSBY	524214.31	410126.96	2021	29/07/2021	68677	Urbis	Axia 16 LED 350mA	19 Watts	6.00 Metres	Steel	
Y	11	STREET LIGHTING	TINTERN WALK	GRIMSBY	524240.46	410110.91	2021	29/07/2021	68678	Urbis	Axia 16 LED 350mA	19 Watts	6.00 Metres	Steel	
Y	12	STREET LIGHTING	TINTERN WALK	GRIMSBY	524256.51	410087.96	2021	02/08/2021	68669	Urbis	Axia 8 LED 350mA	10 Watts	6.00 Metres	Steel	
Y	1	STREET LIGHTING	SERVICE ROAD 1	GRIMSBY	524499.54	409654.33	1967		56891	1 Urbis LED	Teceo 24 LED 500mA	40 Watts	6.00 Metres	Galvanised Steel	
Y	2	STREET LIGHTING	SERVICE ROAD 1	GRIMSBY	524482.83	409677.31	1967		56892	1 Urbis LED	Teceo 24 LED 500mA	40 Watts	6.00 Metres	Galvanised Steel	
Y	3	STREET LIGHTING	SERVICE ROAD 1	GRIMSBY	524468.21	409697.79	2020	10/08/2020	67986	Urbis	Axia 24 LED 540mA	26 Watts	6.00 Metres	Galvanised Steel	
Y	4	STREET LIGHTING	SERVICE ROAD 1	GRIMSBY	524449.1	409734.88	2020	10/08/2020	68256	Urbis	Axia 24 LED 540mA	26 Watts	6.00 Metres	Galvanised Steel	
Y	5	STREET LIGHTING	SERVICE ROAD 1	GRIMSBY	524440.14	409743.18	2020	10/08/2020	68257	Urbis	Axia 24 LED 540mA	26 Watts	6.00 Metres	Galvanised Steel	
Y	6	STREET LIGHTING	SERVICE ROAD 1	GRIMSBY	524431.01	409775.23	2020	10/08/2020	68258	Urbis	Axia 24 LED 540mA	26 Watts	6.00 Metres	Galvanised Steel	
Y	7	STREET LIGHTING	SERVICE ROAD 1	GRIMSBY	524511.81	409705.66	2017	29/08/2017	56896	Urbis	Teceo 24 LED 500mA	40 Watts	6.00 Metres	Galvanised Steel	
Y	8	STREET LIGHTING	SERVICE ROAD 1	GRIMSBY	524530.29	409685.28	1996		56897	1 Urbis LED	Teceo 24 LED 500mA	40 Watts	6.00 Metres	Galvanised Steel	
Y	1	STREET LIGHTING	SERVICE ROAD 2	GRIMSBY	524380.07	409659.73	2020	10/08/2020	67985	Urbis	Teceo 16 LED 500mA	25 Watts	6.00 Metres	Galvanised Steel	
Y	2	STREET LIGHTING	SERVICE ROAD 2	GRIMSBY	524416.46	409658.53	2020	10/08/2020	68259	Urbis	Teceo 16 LED 500mA	25 Watts	6.00 Metres	Galvanised Steel	
Y	3	STREET LIGHTING	SERVICE ROAD 2	GRIMSBY	524416.36	409633.34	2020	10/08/2020	68260	Urbis	Teceo 16 LED 500mA	25 Watts	6.00 Metres	Galvanised Steel	
Y	1	STREET LIGHTING	SERVICE ROAD 3	GRIMSBY	524324.44	409719.88	2021	24/06/2021	68556	Urbis	Axia 24 LED 540mA	41 Watts	6.00 Metres	Galvanised Steel	
Y	2	STREET LIGHTING	SERVICE ROAD 3	GRIMSBY	524361.42	409719.91	2021	24/06/2021	68628	Urbis	Axia 24 LED 540mA	41 Watts	6.00 Metres	Galvanised Steel	
Y	3	STREET LIGHTING	SERVICE ROAD 3	GRIMSBY	524339.97	409739.04	2021	24/06/2021	68629	Urbis	Axia 24 LED 540mA	41 Watts	6.00 Metres	Galvanised Steel	
Y	4	STREET LIGHTING	SERVICE ROAD 3	GRIMSBY	524321.38	409764.34	2021	24/06/2021	68630	Urbis	Axia 24 LED 540mA	41 Watts	6.00 Metres	Galvanised Steel	
Y	5	STREET LIGHTING	SERVICE ROAD 3	GRIMSBY	524331.68	409796.63	2013		56938	1 Urbis LED	Teceo 24 LED 500mA	40 Watts	6.00 Metres	Galvanised Steel	
Y	6	STREET LIGHTING	SERVICE ROAD 3	GRIMSBY	524343.27	409786.79	2021	24/06/2021	68631	Urbis	Axia 24 LED 540mA	41 Watts	6.00 Metres	Galvanised Steel	
Y	7	STREET LIGHTING	SERVICE ROAD 3	GRIMSBY	524380.35	409783.04	2021	24/06/2021	68632	Urbis	Axia 24 LED 540mA	41 Watts	6.00 Metres	Galvanised Steel	
Y	1	STREET LIGHTING	SERVICE ROAD 4	GRIMSBY	524238.21	409884.07	2020	10/03/2020	67818	Urbis	AXIA 16 LED 480mA	26 Watts	6.00 Metres	Galvanised Steel	
Y	2	STREET LIGHTING	SERVICE ROAD 4	GRIMSBY	524248.99	409826.3	2011		56941	1 Urbis LED	Teceo 24 LED 500mA	40 Watts	6.00 Metres	Steel	
Y	3	STREET LIGHTING	SERVICE ROAD 4	GRIMSBY	524262.05	409870.71	2009		56942	1 Urbis LED	Teceo 24 LED 500mA	40 Watts	6.00 Metres	Steel	
Y	4	STREET LIGHTING	SERVICE ROAD 4	GRIMSBY	524289.3	409897.14	1995		56943	1 Urbis LED	Teceo 24 LED 500mA	40 Watts	6.00 Metres	Galvanised Steel	
Y	1	STREET LIGHTING	SERVICE ROAD 5	GRIMSBY	524394.2	409887.76	2021	29/06/2021	68557	Urbis	Axia 24 LED 540mA	41 Watts	6.00 Metres	Galvanised Steel	
Y	2	STREET LIGHTING	SERVICE ROAD 5	GRIMSBY	524340.87	409885.71	2021	29/06/2021	68654	Urbis	Axia 24 LED 540mA	41 Watts	6.00 Metres	Galvanised Steel	
Y	3	STREET LIGHTING	SERVICE ROAD 5	GRIMSBY	524365.87	409864.82	2021	29/06/2021	68655	Urbis	Axia 24 LED 540mA	41 Watts	6.00 Metres	Galvanised Steel	
Y	4	STREET LIGHTING	SERVICE ROAD 5	GRIMSBY	524380.91	409854.22	2021	29/06/2021	68656	Urbis	Axia 24 LED 540mA	41 Watts	6.00 Metres	Galvanised Steel	
Y	5	STREET LIGHTING	SERVICE ROAD 5	GRIMSBY	524408.44	409834.28	2021	29/06/2021	68657	Urbis	Axia 24 LED 540mA	41 Watts	6.00 Metres	Galvanised Steel	
Y	1	STREET LIGHTING	SERVICE ROAD 6	GRIMSBY	524510.29	409861.99	1963		56959	1 Urbis LED	Teceo 16 LED 500mA	28 Watts	5.00 Metres	Galvanised Steel	
Y	2	STREET LIGHTING	SERVICE ROAD 6	GRIMSBY	524501.18	409835.35	2009	09/07/2009	56960	Urbis	Teceo 16 LED 500mA	28 Watts	6.00 Metres	Galvanised Steel	
Y	3	STREET LIGHTING	SERVICE ROAD 6	GRIMSBY	524474.6	409835.79	1995		56961	1 Urbis LED	Teceo 16 LED 500mA	28 Watts	6.00 Metres	Galvanised Steel	
Y	1	STREET LIGHTING	SERVICE ROAD 7	GRIMSBY	524586	409761	2001		56966	1 Urbis LED	Teceo 24 LED 500mA	40 Watts	6.00 Metres	Galvanised Steel	
Y	2	STREET LIGHTING	SERVICE ROAD 7	GRIMSBY	524551.8	409771.79	1995		56967	1 Urbis LED	Teceo 24 LED 500mA	40 Watts	6.00 Metres	Galvanised Steel	
Y	3	STREET LIGHTING	SERVICE ROAD 7	GRIMSBY	524519.07	409792.08	2008		56968	1 Urbis LED	Teceo 24 LED 500mA	40 Watts	6.00 Metres	Steel	
Y	4	STREET LIGHTING	SERVICE ROAD 7	GRIMSBY	524518.05	409766.32	2020	02/09/2020	67980	Urbis	Teceo 24 LED 500mA	40 Watts	6.00 Metres	Galvanised Steel	
Y	5	STREET LIGHTING	SERVICE ROAD 7	GRIMSBY	524554.97	409800.53	1995		56970	1 Urbis LED	Teceo 24 LED 500mA	40 Watts	6.00 Metres	Galvanised Steel	
Y	6	STREET LIGHTING	SERVICE ROAD 7	GRIMSBY	524575.11	409838.58	2020	02/09/2020	68261	Urbis	Teceo 24 LED 500mA	40 Watts	6.00 Metres	Galvanised Steel	
Y	1	STREET LIGHTING	ANDREWS LANE	GRIMSBY	524303.24	409947.78	2013		56975	1 Urbis LED	Axia 16 LED 500mA	28 Watts	6.00 Metres	Steel	
Y	2	STREET LIGHTING	ANDREWS LANE	GRIMSBY	524307.48	409968.64	2013		56976	1 Urbis LED	Axia 16 LED 500mA	28 Watts	6.00 Metres	Steel	
Y	3	STREET LIGHTING	ANDREWS LANE	GRIMSBY	524311.58	409988.37	2013		56977	1 Urbis LED	Axia 16 LED 500mA	28 Watts	6.00 Metres	Steel	
Y	4	STREET LIGHTING	ANDREWS LANE	GRIMSBY	524336.94	409993.8	2013		56978	1 Urbis LED	Axia 16 LED 500mA	28 Watts	6.00 Metres	Steel	
Y	5	STREET LIGHTING	ANDREWS LANE	GRIMSBY	524325.17	410018.09	2000		56979	1 Urbis LED	Axia 16 LED 500mA	28 Watts	6.00 Metres	Galvanised Steel	
Y	6	STREET LIGHTING	ANDREWS LANE	GRIMSBY	524315.07	410034.86	2013		56980	1 Urbis LED	Axia 16 LED 500mA	28 Watts	6.00 Metres	Steel	
Y	7	STREET LIGHTING	ANDREWS LANE	GRIMSBY	524305.27	410049.75	2013		56981	1 Urbis LED	Axia 16 LED 500mA	28 Watts	6.00 Metres	Steel	
Y	8	STREET LIGHTING	ANDREWS LANE	GRIMSBY	524307.35	410083.77	2013		56984	1 Urbis LED	Axia 16 LED 500mA	28 Watts	6.00 Metres	Steel	
Y	9	STREET LIGHTING	ANDREWS LANE	GRIMSBY	524290.19	410068.08	2017		56983	1 Urbis LED	Axia 16 LED 500mA	28 Watts	6.00 Metres	Galvanised Steel	
Y	10	STREET LIGHTING	ANDREWS LANE	GRIMSBY	524281.19	410069.93	2013		53520	Urbis	Axia 8 LED 350mA	10 Watts	6.00 Metres	Steel	
Y	11	STREET LIGHTING	ANDREWS LANE	GRIMSBY	524262.52	410057.02	2013		53519	Urbis	Axia 8 LED 350mA	10 Watts	6.00 Metres	Steel	
Y	12	STREET LIGHTING	ANDREWS LANE	GRIMSBY	524253.65	410044.25	2013		53518	Urbis	Axia 8 LED 350mA	10 Watts	6.00 Metres	Steel	
Y	13	STREET LIGHTING	ANDREWS LANE	GRIMSBY	524264.86	410029.63	2013		53517	Urbis	Axia 8 LED 350mA	10 Watts	6.00 Metres	Steel	
Y	14	STREET LIGHTING	ANDREWS LANE	GRIMSBY	524280.31	410026.42	2013		56982	1 Urbis LED	Axia 16 LED 500mA	28 Watts	6.00 Metres	Steel	
Y	15	STREET LIGHTING	ANDREWS LANE	GRIMSBY	524291.97	410023.92	2011		53516	Urbis	Axia 8 LED 350mA	10 Watts	6.00 Metres	Steel	
Y	1	STREET LIGHTING	SERVICE ROAD 9	GRIMSBY	524108.95	409990.4	2020	10/08/2020	67983	Urbis	Axia 24 LED 540mA	26 Watts	6.00 Metres	Galvanised Steel	
Y	2	STREET LIGHTING	SERVICE ROAD 9	GRIMSBY	524125.76	410015.06	2020	10/08/2020	68025	Urbis	Axia 24 LED 540mA	26 Watts	6.00 Metres	Galvanised Steel	
Y	3	STREET LIGHTING	SERVICE ROAD 9	GRIMSBY	524158.92	410037.75	2020	10/08/2020	68262	Urbis	Axia 24 LED 540mA	26 Watts	6.00 Metres	Galvanised Steel	
Y	4	STREET LIGHTING	SERVICE ROAD 9	GRIMSBY	524183.82	410045.42	2020	10/08/2020	68263	Urbis	Axia 24 LED 540mA	26 Watts	6.00 Metres	Galvanised Steel	
Y	5	STREET LIGHTING	SERVICE ROAD 9	GRIMSBY	524200.38	410069.83	2020	10/08/2020	68264	Urbis	Axia 24 LED 540mA	26 Watts	6.00 Metres	Galvanised Steel	
Y	1	STREET LIGHTING	SERVICE ROAD 10	GRIMSBY	523997.77	410037.98	2004		56996	1 Urbis LED	Teceo 24 LED 500mA	40 Watts	6.00 Metres	Stainless Steel	
Y	2	STREET LIGHTING	SERVICE ROAD 10	GRIMSBY	524033.49	410043.96	1996		56997	1 Urbis LED	Teceo 24 LED 500mA	40 Watts	6.00 Metres	Steel	
Y	3	STREET LIGHTING	SERVICE ROAD 10	GRIMSBY	524058.12	410066.96	2020	07/08/2020	67982	Urbis	Teceo 24 LED 500mA	40 Watts	6.00 Metres	Galvanised Steel	
Y	4	STREET LIGHTING	SERVICE ROAD 10	GRIMSBY	524085.64	410079.28	2020	07/08/2020	68265	Urbis	Teceo 24 LED 500mA	40 Watts	6.00 Metres	Galvanised Steel	
Y	1	STREET LIGHTING	SERVICE ROAD 11	GRIMSBY	524015.13	410058.88	2020	10/08/2020	67981	Urbis	Teceo 24 LED 500mA	40 Watts	6.00 Metres	Galvanised Steel	
Y	2	STREET LIGHTING	SERVICE ROAD 11	GRIMSBY	523990.6	410096	2020	10/08/2020	68266	Urbis	Teceo 24 LED 500mA	40 Watts	6.00 Metres	Galvanised Steel	
Y	3	STREET LIGHTING	SERVICE ROAD 11	GRIMSBY	523972.46	410118.82	2020	10/08/2020	68267	Urbis	Teceo 24 LED 500mA	40 Watts	6.00 Metres	Galvanised Steel	
Y	4	STREET LIGHTING	SERVICE ROAD 11	GRIMSBY	523987.83	410150.39	2020	10/08/2020	68268	Urbis	Teceo 24 LED 500mA	40 Watts	6.00 Metres	Galvanised Steel	
Y	1	STREET LIGHTING	SERVICE ROAD 12	GRIMSBY	524076.23	410235.28	2010		57004	Urbis	Axia 16 LED 350mA	19 Watts	6.00 Metres	Steel	
Y	2	STREET LIGHTING	SERVICE ROAD 12	GRIMSBY	524106.61	410233.04	2010		57005	Urbis	Axia 16 LED 350mA	19 Watts	6.00 Metres	Steel	
Y	3	STREET LIGHTING	SERVICE ROAD 12	GRIMSBY	524091.29	410216.96	2010		57006	Urbis	Axia 16 LED 350mA	19 Watts	6.00 Metres	Steel	
Y	4	STREET LIGHTING	SERVICE ROAD 12	GRIMSBY	524064.37	410193.17	2010		57007	Urbis	Axia 16 LED 350mA	19 Watts	6.00 Metres	Steel	
Y	5	STREET LIGHTING	SERVICE ROAD 12	GRIMSBY	524084.73	410200.53	2010		57008	Urbis	Axia 16 LED 350mA	19 Watts	6.00 Metres	Steel	
Y	6	STREET LIGHTING	SERVICE ROAD 12	GRIMSBY	524101.75	410197.7	2010		57009	Urbis	Axia 16 LED 350mA	19 Watts	6.00 Metres	Steel	
Y	7	STREET LIGHTING	SERVICE ROAD 12	GRIMSBY	524119.11	410173.3	2010		57010	Urbis	Axia 16 LED 350mA	19 Watts	6.00 Metres	Steel	

Y	8	STREET LIGHTING	SERVICE ROAD 12	GRIMSBY	524141.31	410179	2003		57011	Urbis	Axia 16 LED 350mA	19 Watts	6.00 Metres	Galvanised Steel	
Y	9	STREET LIGHTING	SERVICE ROAD 12	GRIMSBY	524155.1	410158.2	2010		57012	Urbis	Axia 16 LED 350mA	19 Watts	6.00 Metres	Steel	
Y	10	STREET LIGHTING	SERVICE ROAD 12	GRIMSBY	524134.2	410143.68	2010		57013	Urbis	Axia 16 LED 350mA	19 Watts	6.00 Metres	Steel	
Y	11	STREET LIGHTING	SERVICE ROAD 12	GRIMSBY	524109.87	410131.07	2010		57014	Urbis	Axia 16 LED 350mA	19 Watts	6.00 Metres	Steel	
Y	12	STREET LIGHTING	SERVICE ROAD 12	GRIMSBY	524091.66	410140.04	2010		57015	Urbis	Axia 16 LED 350mA	19 Watts	6.00 Metres	Steel	
Y	13	STREET LIGHTING	SERVICE ROAD 12	GRIMSBY	524105.52	410160.58	2010		57016	Urbis	Axia 16 LED 350mA	19 Watts	6.00 Metres	Steel	
Y	1	STREET LIGHTING	SERVICE ROAD 13	GRIMSBY	524288.72	410202.53	1996		57017	Urbis	Axia 16 LED 350mA	19 Watts	6.00 Metres	Galvanised Steel	
Y	2	STREET LIGHTING	SERVICE ROAD 13	GRIMSBY	524284.32	410191.92	2010		57018	Urbis	Axia 16 LED 350mA	19 Watts	6.00 Metres	Steel	
Y	3	STREET LIGHTING	SERVICE ROAD 13	GRIMSBY	524265.22	410189.25	2010		57019	Urbis	Axia 16 LED 350mA	19 Watts	6.00 Metres	Steel	
Y	4	STREET LIGHTING	SERVICE ROAD 13	GRIMSBY	524260.82	410171.52	2010		57020	Urbis	Axia 16 LED 350mA	19 Watts	6.00 Metres	Steel	
Y	5	STREET LIGHTING	SERVICE ROAD 13	GRIMSBY	524235	410165.21	2010		57021	Urbis	Axia 16 LED 350mA	19 Watts	6.00 Metres	Steel	
Y	6	STREET LIGHTING	SERVICE ROAD 13	GRIMSBY	524230	410148.85	2010		57022	Urbis	Axia 16 LED 350mA	19 Watts	6.00 Metres	Steel	
Y	7	STREET LIGHTING	SERVICE ROAD 13	GRIMSBY	524252.05	410133.51	1996		57023	Urbis	Axia 16 LED 350mA	19 Watts	6.00 Metres	Galvanised Steel	
Y	1	STREET LIGHTING	SERVICE ROAD 14	GRIMSBY	524251.31	410209.37	2010	27/09/2010	57024	Urbis	Axia 16 LED 350mA	19 Watts	6.00 Metres	Galvanised Steel	
Y	2	STREET LIGHTING	SERVICE ROAD 14	GRIMSBY	524236.76	410217.07	2010		57025	Urbis	Axia 16 LED 350mA	19 Watts	6.00 Metres	Steel	
Y	3	STREET LIGHTING	SERVICE ROAD 14	GRIMSBY	524213.96	410219.07	2010		57026	Urbis	Axia 16 LED 350mA	19 Watts	6.00 Metres	Steel	
Y	4	STREET LIGHTING	SERVICE ROAD 14	GRIMSBY	524208.3	410231.95	2010		57027	Urbis	Axia 16 LED 350mA	19 Watts	6.00 Metres	Steel	
Y	5	STREET LIGHTING	SERVICE ROAD 14	GRIMSBY	524193.58	410197.87	2010		57028	Urbis	Axia 16 LED 350mA	19 Watts	6.00 Metres	Steel	
Y	6	STREET LIGHTING	SERVICE ROAD 14	GRIMSBY	524188.31	410232.06	2010		57029	Urbis	Axia 16 LED 350mA	19 Watts	6.00 Metres	Steel	
Y	1	STREET LIGHTING	SERVICE ROAD 15	GRIMSBY	524161.27	409764.8	2021	30/06/2021	68558	Urbis	Axia 24 LED 540mA	41 Watts	6.00 Metres	Galvanised Steel	
Y	2	STREET LIGHTING	SERVICE ROAD 15	GRIMSBY	524130.27	409708.07	1967		57031	Urbis	Axia 24 LED 540mA	41 Watts	5.00 Metres	Galvanised Steel	
Y	3	STREET LIGHTING	SERVICE ROAD 15	GRIMSBY	524132.55	409755.95	2021	30/06/2021	68648	Urbis	Axia 24 LED 540mA	41 Watts	6.00 Metres	Galvanised Steel	
Y	4	STREET LIGHTING	SERVICE ROAD 15	GRIMSBY	524173.1	409746.88	2018	03/12/2018	67252	Urbis	Axia 24 LED 540mA	41 Watts	6.00 Metres	Galvanised Steel	
Y	5	STREET LIGHTING	SERVICE ROAD 15	GRIMSBY	524193.84	409776.23	2021	30/06/2021	68649	Urbis	Axia 24 LED 540mA	41 Watts	6.00 Metres	Galvanised Steel	
Y	6	STREET LIGHTING	SERVICE ROAD 15	GRIMSBY	524221.7	409757.47	1967		57035	Urbis	Axia 24 LED 540mA	41 Watts	5.00 Metres	Galvanised Steel	
Y	1	STREET LIGHTING	SERVICE ROAD 16	GRIMSBY	524271.55	409727.21	1967		57036	1 Urbis LED	Teceo 24 LED 500mA	40 Watts	5.00 Metres	Galvanised Steel	
Y	2	STREET LIGHTING	SERVICE ROAD 16	GRIMSBY	524239.92	409701.79	2021	23/06/2021	68559	Urbis	Axia 24 LED 540mA	41 Watts	6.00 Metres	Galvanised Steel	
Y	3	STREET LIGHTING	SERVICE ROAD 16	GRIMSBY	524212.21	409678.7	2021	23/06/2021	68650	Urbis	Axia 24 LED 540mA	41 Watts	6.00 Metres	Galvanised Steel	
Y	4	STREET LIGHTING	SERVICE ROAD 16	GRIMSBY	524205.64	409681.64	2016	19/09/2016	57038	Urbis	Teceo 24 LED 500mA	40 Watts	6.00 Metres	Galvanised Steel	
Y	5	STREET LIGHTING	SERVICE ROAD 16	GRIMSBY	524183.36	409647.21	1967		57039	1 Urbis LED	Teceo 24 LED 500mA	40 Watts	5.00 Metres	Galvanised Steel	
Y	1	STREET LIGHTING	SERVICE ROAD 17	GRIMSBY	524621.65	409798.8	2021	05/07/2021	68560	Urbis	Axia 24 LED 540mA	41 Watts	6.00 Metres	Galvanised Steel	
Y	2	STREET LIGHTING	SERVICE ROAD 17	GRIMSBY	524641.43	409785.67	2021	05/07/2021	68651	Urbis	Axia 24 LED 540mA	41 Watts	6.00 Metres	Galvanised Steel	
Y	3	STREET LIGHTING	SERVICE ROAD 17	GRIMSBY	524648.55	409811.93	2021	25/06/2021	68565	Urbis	Axia 24 LED 540mA	41 Watts	6.00 Metres	Steel	
Y	4	STREET LIGHTING	SERVICE ROAD 17	GRIMSBY	524627.14	409820.04	1967		66646	1 Urbis LED	Axia 16 LED 500mA	28 Watts	5.00 Metres	Aluminium	
Y	1	STREET LIGHTING	SERVICE ROAD 18	GRIMSBY	524598.2	409701.15	2021	25/06/2021	68561	Urbis	Axia 24 LED 500mA	28 Watts	6.00 Metres	Galvanised Steel	
Y	2	STREET LIGHTING	SERVICE ROAD 18	GRIMSBY	524617.82	409693.87	2021	25/06/2021	68652	Urbis	Axia 24 LED 500mA	28 Watts	6.00 Metres	Galvanised Steel	
Y	3	STREET LIGHTING	SERVICE ROAD 18	GRIMSBY	524613.17	409675.68	2014		57045	1 Urbis LED	Axia 16 LED 500mA	28 Watts	6.00 Metres	Galvanised Steel	
Y	1	STREET LIGHTING	SERVICE ROAD 19	GRIMSBY	524546.02	409645.61	2021	01/07/2021	68562	Urbis	AXIA 16 LED 390mA	21 Watts	6.00 Metres	Galvanised Steel	
Y	2	STREET LIGHTING	SERVICE ROAD 19	GRIMSBY	524549.18	409621.4	2021	01/07/2021	68653	Urbis	AXIA 16 LED 390mA	21 Watts	6.00 Metres	Galvanised Steel	
Y	3	STREET LIGHTING	SERVICE ROAD 19	GRIMSBY	524568.36	409607.7	1995		57048	Urbis	Axia 16 LED 350mA	19 Watts	6.00 Metres	Galvanised Steel	
Y	4	STREET LIGHTING	SERVICE ROAD 19	GRIMSBY	524541.02	409592.83	2003		57049	Urbis	Axia 16 LED 350mA	19 Watts	6.00 Metres	Galvanised Steel	
Y	5	STREET LIGHTING	SERVICE ROAD 19	GRIMSBY	524527.73	409611.94	2003		57050	Urbis	Axia 16 LED 350mA	19 Watts	6.00 Metres	Galvanised Steel	
Y	1	STREET LIGHTING	SERVICE ROAD 25	GRIMSBY	524520.76	409945.51	2002		57072	1 Urbis LED	Teceo 32 LED 500mA	52 Watts	6.00 Metres	Galvanised Steel	
Y	2	STREET LIGHTING	SERVICE ROAD 25	GRIMSBY	524502.17	409951.14	2002		62956	1 Urbis LED	Teceo 24 LED 500mA	40 Watts	6.00 Metres	Galvanised Steel	
Y	3	STREET LIGHTING	SERVICE ROAD 25	GRIMSBY	524488.41	409960.36	2010		62957	1 Urbis LED	Teceo 24 LED 500mA	40 Watts	6.00 Metres	Galvanised Steel	
Y	1	STREET LIGHTING	SERVICE ROAD 26	GRIMSBY	524498.93	410071.08	1997		57073	1 Urbis LED	Axia 16 LED 500mA	28 Watts	5.00 Metres	Galvanised Steel	
Y	2	STREET LIGHTING	SERVICE ROAD 26	GRIMSBY	524476.76	410056.96	2023	22/02/2023	69213	Urbis	Axia 24 LED 500mA	28 Watts	6.00 Metres	Galvanised Steel	
Y	3	STREET LIGHTING	SERVICE ROAD 26	GRIMSBY	524472.73	410032.1	1967		57075	1 Urbis LED	Axia 16 LED 500mA	28 Watts	5.00 Metres	Steel	
Y	4	STREET LIGHTING	SERVICE ROAD 26	GRIMSBY	524463.99	410008.71	1963		57076	1 Urbis LED	Axia 16 LED 500mA	28 Watts	5.00 Metres	Steel	
Y	5	STREET LIGHTING	SERVICE ROAD 26	GRIMSBY	524429.57	410009.73	1993		57077	1 Urbis LED	Axia 16 LED 500mA	28 Watts	6.00 Metres	Galvanised Steel	
Y	6	STREET LIGHTING	SERVICE ROAD 26	GRIMSBY	524453.8	410074.84	2004		57078	1 Urbis LED	Axia 16 LED 500mA	28 Watts	6.00 Metres	Stainless Steel	
Y	1	STREET LIGHTING	SALTERGATE	GRIMSBY	524329.03	410099.65	2003	09/04/2003	56507	Urbis	Axia 8 LED 350mA	10 Watts	6.00 Metres	Galvanised Steel	
Y	2	STREET LIGHTING	SALTERGATE	GRIMSBY	524318.82	410063.91	2012	01/10/2012	56508	Urbis	Axia 8 LED 350mA	10 Watts	6.00 Metres	Steel	
Y	3	STREET LIGHTING	SALTERGATE	GRIMSBY	524348.91	410084.47	1996		56509	Urbis	Axia 8 LED 350mA	10 Watts	5.00 Metres	Galvanised Steel	
Y	4	STREET LIGHTING	SALTERGATE	GRIMSBY	524372.48	410076.74	2014	15/11/2014	56510	Urbis	Axia 8 LED 350mA	10 Watts	6.00 Metres	Galvanised Steel	
Y	5	STREET LIGHTING	SALTERGATE	GRIMSBY	524355.82	410058.56	2003	11/09/2003	56511	Urbis	Axia 8 LED 350mA	10 Watts	6.00 Metres	Galvanised Steel	
Y	6	STREET LIGHTING	SALTERGATE	GRIMSBY	524342.61	410040.93	2008		56512	Urbis	Axia 8 LED 350mA	10 Watts	6.00 Metres	Steel	
Y	7	STREET LIGHTING	SALTERGATE	GRIMSBY	524366.03	410038.53	2008		56513	Urbis	Axia 8 LED 350mA	10 Watts	6.00 Metres	Steel	
Y	8	STREET LIGHTING	SALTERGATE	GRIMSBY	524388.47	410050.35	2012	01/10/2012	56514	Urbis	Axia 8 LED 350mA	10 Watts	6.00 Metres	Steel	
Y	9	STREET LIGHTING	SALTERGATE	GRIMSBY	524404.63	410064.41	1996		56515	Urbis	Axia 8 LED 350mA	10 Watts	5.00 Metres	Galvanised Steel	
Y	10	STREET LIGHTING	SALTERGATE	GRIMSBY	524424.54	410054.29	2012	01/10/2012	56516	Urbis	Axia 8 LED 350mA	10 Watts	6.00 Metres	Steel	
Y	11	STREET LIGHTING	SALTERGATE	GRIMSBY	524448.36	410046.08	2012	01/10/2012	56517	Urbis	Axia 8 LED 350mA	10 Watts	6.00 Metres	Steel	
Y	1	STREET LIGHTING	CROMWELL ROAD	GRIMSBY	526173.59	409153.24	1989		46955	Urbis	Ampera 48 LED 700mA	104 Watts	10.00 Metres	Galvanised Steel	
Y	2	STREET LIGHTING	CROMWELL ROAD	GRIMSBY	526159.92	409174.35	1989		46956	Urbis	Ampera 48 LED 700mA	104 Watts	10.00 Metres	Galvanised Steel	
Y	3	STREET LIGHTING	CROMWELL ROAD	GRIMSBY	526099.92	409205.61	1989		46957	Urbis	Ampera 48 LED 700mA	104 Watts	10.00 Metres	Galvanised Steel	
Y	4	STREET LIGHTING	CROMWELL ROAD	GRIMSBY	526055.75	409213.27	2024	26/09/2024	46958	Urbis	Teceo 24 LED 500mA	40 Watts	8.00 Metres	Galvanised Steel	
Y	5	STREET LIGHTING	CROMWELL ROAD	GRIMSBY	526036.76	409240.29	1989		46959	Urbis	Ampera 48 LED 700mA	104 Watts	10.00 Metres	Galvanised Steel	
Y	6	STREET LIGHTING	CROMWELL ROAD	GRIMSBY	525997.01	409245.55	1989		46960	Urbis	Ampera 48 LED 700mA	104 Watts	10.00 Metres	Galvanised Steel	
Y	7	STREET LIGHTING	CROMWELL ROAD	GRIMSBY	525967.25	409277.19	1989		46961	Urbis	Ampera 48 LED 700mA	104 Watts	10.00 Metres	Galvanised Steel	
Y	8	STREET LIGHTING	CROMWELL ROAD	GRIMSBY	525938.39	409276.74	1989		46962	Urbis	Ampera 48 LED 700mA	104 Watts	10.00 Metres	Galvanised Steel	
Y	9	STREET LIGHTING	CROMWELL ROAD	GRIMSBY	525920.67	409301.62	1989		46963	Urbis	Ampera 48 LED 700mA	104 Watts	10.00 Metres	Galvanised Steel	
Y	10	STREET LIGHTING	CROMWELL ROAD	GRIMSBY	525879.1	409305.87	1989		46964	Urbis	Ampera 48 LED 700mA	104 Watts	10.00 Metres	Galvanised Steel	
Y	11	STREET LIGHTING	CROMWELL ROAD	GRIMSBY	525839.35	409344.03	1989		46965	Urbis	Ampera 48 LED 700mA	104 Watts	10.00 Metres	Galvanised Steel	
Y	12	STREET LIGHTING	CROMWELL ROAD	GRIMSBY	525788.22	409355.42	1989		46966	Urbis	Ampera 48 LED 700mA	104 Watts	10.00 Metres	Galvanised Steel	
Y	13	STREET LIGHTING	CROMWELL ROAD	GRIMSBY	525754.04	409388.77	1989		46967	Urbis	AXIA 3.3 48 LED 540mA	78 Watts	10.00 Metres	Galvanised Steel	
Y	14	STREET LIGHTING	CROMWELL ROAD	GRIMSBY	525716.07	409408.83	1989		46968	Urbis	Ampera 48 LED 700mA	104 Watts	10.00 Metres	Galvanised Steel	
Y	15	STREET LIGHTING	CROMWELL ROAD	GRIMSBY	525665.01	409415.57	1989		46969	1 Urbis LED	Teceo 48 LED 700mA	104 Watts	10.00 Metres	Galvanised Steel	
Y	16	STREET LIGHTING	CROMWELL ROAD	GRIMSBY	525638.53	409444.34	1988		46970	1 Urbis LED	Teceo 48 LED 700mA	104 Watts	8.00 Metres	Galvanised Steel	
Y	17	STREET LIGHTING	CROMWELL ROAD	GRIMSBY	525597.39	409453.27	2015	30/10/2015	46971	1 Urbis LED	Teceo 48 LED 700mA	104 Watts	8.00 Metres	Galvanised Steel	
Y	18	STREET LIGHTING	CROMWELL ROAD	GRIMSBY					70247						
Y	19	STREET LIGHTING	CROMWELL ROAD	GRIMSBY	525526.51	409490.8	1988		46973	1 Urbis LED	Teceo 48 LED 700mA	104 Watts	8.00 Metres	Steel	
Y	20	STREET LIGHTING	CROMWELL ROAD	GRIMSBY	525498.41	409518.9	1988		46974	1 Urbis LED	Teceo 24 LED 500mA	40 Watts	8.00 Metres	Steel	
Y	21	STREET LIGHTING	CROMWELL ROAD	GRIMSBY	525461.32	409525.61	1988		46975	1 Urbis LED	Teceo 48 LED 700mA	104 Watts	8.00 Metres	Steel	
Y	22	STREET LIGHTING	CROMWELL ROAD	GRIMSBY	525443.47	409547.45	1988		46976	1 Urbis LED	Teceo 24 LED 500mA	40 Watts	8.00 Metres	Steel	
Y	23	STREET LIGHTING	CROMWELL ROAD	GRIMSBY	525398.54	409559.09	1988		46977	1 Urbis LED	Teceo 48 LED 700mA	104 Watts	8.00 Metres	Steel	
Y	24	STREET LIGHTING	CROMWELL ROAD	GRIMSBY	525365.76	409588.65	1988		46978	1 Urbis LED	Teceo 24 LED 500mA	40 Watts	8.00 Metres	Steel	
Y	25	STREET LIGHTING	CROMWELL ROAD	GRIMSBY	525328.64	409596.49	1988		46979	1 Urbis LED	Teceo 24 LED 500mA	40 Watts	8.00 Metres	Steel	
Y	26	STREET LIGHTING	CROMWELL ROAD	GRIMSBY	525303.83	409621.17	1988		46980	1 Urbis LED	Teceo 24 LED 500mA	40 Watts	8.00 Metres	Steel	
Y	27	STREET LIGHTING	CROMWELL ROAD	GRIMSBY	525262.87	409631.21	1988		46981	1 Urbis LED	Teceo 24 LED 500mA	40 Watts	8.00 Metres	Steel	
Y	28	STREET LIGHTING	CROMWELL ROAD	GRIMSBY	525230.34	409660.2	1988		46982	1 Urbis LED	Teceo 24 LED 500mA	40 Watts	8.00 Metres	Steel	
Y	29	STREET LIGHTING	CROMWELL ROAD	GRIMSBY	525188.69	409667.67	1995		46983	1 Urbis LED	Teceo 48 LED 700mA	104 Watts	8.00 Metres	Steel	
Y	30	STREET LIGHTING	CROMWELL ROAD	GRIMSBY	525164.39	409695.45	1988		46984	1 Urbis LED	Teceo 24 LED 500mA	40 Watts	8.00 Metres	Steel	
Y	31	STREET LIGHTING	CROMWELL ROAD	GRIMSBY	525129.58	409701.66	1988		46985	1 Urbis LED	Teceo 24 LED 500mA	40 Watts	8.00 Metres	Steel	
Y	32	STREET LIGHTING	CROMWELL ROAD	GRIMSBY	525110.09	409724.31	1988		46986	1 Urbis LED	Teceo 24 LED 500mA	40 Watts	8.00 Metres	Steel	
Y	33	STREET LIGHTING	CROMWELL ROAD	GRIMSBY	525085.03	409737.48	1988		46987	1 Urbis LED	Teceo 24 LED 500mA	40 Watts	8.00 Metres	Steel	
Y	34	STREET LIGHTING	CROMWELL ROAD	GRIMSBY	525063.13	409737.42	1988		46988	1 Urbis LED	Teceo 48 LED 700mA	104 Watts	8.00 Metres	Steel	
Y	35	STREET LIGHTING	CROMWELL ROAD	GRIMSBY	525030.65	409766.3	1988		46989	1 Urbis LED	Teceo 24 LED 500mA	40 Watts	8.00 Metres	Steel	
Y	36	STREET LIGHTING	CROMWELL ROAD	GRIMSBY	525002.81	409779.62	2023	02/05/2023	69221	Urbis	Teceo 24 LED 500mA	40 Watts	8.00 Metres	Galvanised Steel	
Y	37	STREET LIGHTING	CROMWELL ROAD	GRIMSBY	524965.88	409792.25	1988		46991	1 Urbis LED	Teceo 24 LED 500mA	40 Watts	8.00 Metres	Steel	
Y	38	STREET LIGHTING	CROMWELL ROAD	GRIMSBY	524932.46	409799.98	1988		46992	1 Urbis LED	Teceo 24 LED 500mA	40 Watts	8.00 Metres	Steel	
Y	39	STREET LIGHTING	CROMWELL ROAD	GRIMSBY	524893.22	409796.81	2005		46993	1 Urbis LED	Teceo 48 LED 700mA	104 Watts	10.00 Metres	Stainless Steel	
Y	40	STREET LIGHTING	CROMWELL ROAD	GRIMSBY	524876	409819	2003		46994	1 Urbis LED	Teceo 48 LED 700mA	104 Watts	10.00 Metres	Stainless Steel	
Y	41	STREET LIGHTING	CROMWELL ROAD	GRIMSBY	524850	409789	2003		46995	1 Urbis LED	Teceo 48 LED 700mA	104 Watts	10.00 Metres	Stainless Steel	
Y	42	STREET LIGHTING	CROMWELL ROAD	GRIMSBY	524843	409828	2003		46996	1 Urbis LED	Teceo 48 LED 700mA	104 Watts	10.00 Metres	Stainless Steel	
Y	43	STREET LIGHTING	CROMWELL ROAD	GRIMSBY	524825.12	409810.61	2006		46997	1 Urbis LED	Teceo 48 LED 700mA	104 Watts	10.00 Metres	Stainless Steel	
Y	44	STREET LIGHTING	CROMWELL ROAD	GRIMSBY	524789.35	409830.37	2019	13/11/2019	67586	Urbis	Teceo 24 LED 500mA	40 Watts	8.00 Metres	Galvanised Steel	
Y	45	STREET LIGHTING	CROMWELL ROAD	GRIMSBY	524752.32	409824.18	2019	07/03/2019	67328	Urbis	Teceo 24 LED 500mA	40 Watts	8.00 Metres	Galvanised Steel	
Y	46	STREET LIGHTING	CROMWELL ROAD	GRIMSBY	524719	409843.74	1988		47000	1 Urbis LED	Teceo 24 LED 500mA	40 Watts	8.00 Metres	Steel	
Y	47	STREET LIGHTING	CROMWELL ROAD	GRIMSBY	524684.97	409840.2	1988		47001	1 Urbis LED	Teceo 48 LED 700mA	104 Watts	8.00 Metres	Steel	
Y	48	STREET LIGHTING	CROMWELL ROAD	GRIMSBY	524652.9	409857.19	1988		47002	1 Urbis LED	Teceo 48 LED 700mA	104 Watts	8.00 Metres	Steel	

Y	49	STREET LIGHTING	CROMWELL ROAD	GRIMSBY	524620.93	409863.87	1988		47003	1 Urbis LED	Teceo 24 LED 500mA	40 Watts	8.00 Metres	Steel	
Y	50	STREET LIGHTING	CROMWELL ROAD	GRIMSBY	524579.69	409861.2	1988		47004	1 Urbis LED	Teceo 48 LED 700mA	104 Watts	8.00 Metres	Steel	
Y	51	STREET LIGHTING	CROMWELL ROAD	GRIMSBY	524547.1	409878.51	1988		47005	1 Urbis LED	Teceo 24 LED 500mA	40 Watts	8.00 Metres	Steel	
Y	52	STREET LIGHTING	CROMWELL ROAD	GRIMSBY	524500.71	409874	1988		47006	1 Urbis LED	Teceo 48 LED 700mA	104 Watts	8.00 Metres	Steel	
Y	53	STREET LIGHTING	CROMWELL ROAD	GRIMSBY	524467.75	409897.84	1988		47007	1 Urbis LED	Teceo 48 LED 700mA	104 Watts	8.00 Metres	Steel	
Y	54	STREET LIGHTING	CROMWELL ROAD	GRIMSBY	524424.67	409893.06	1988		47008	1 Urbis LED	Teceo 48 LED 700mA	104 Watts	8.00 Metres	Steel	
Y	55	STREET LIGHTING	CROMWELL ROAD	GRIMSBY	524388.03	409915.43	1988		47009	Urbis	AXIA 3.3 48 LED 540mA	78 Watts	8.00 Metres	Steel	
Y	56	STREET LIGHTING	CROMWELL ROAD	GRIMSBY	524347.52	409911.84	1988		47010	1 Urbis LED	Teceo 48 LED 700mA	104 Watts	8.00 Metres	Steel	
Y	57	STREET LIGHTING	CROMWELL ROAD	GRIMSBY	524316.04	409932.64	1988		47011	1 Urbis LED	Teceo 48 LED 700mA	104 Watts	8.00 Metres	Steel	
Y	58	STREET LIGHTING	CROMWELL ROAD	GRIMSBY	524277	409934.48	1988		47012	1 Urbis LED	Teceo 48 LED 700mA	104 Watts	8.00 Metres	Steel	
Y	59	STREET LIGHTING	CROMWELL ROAD	GRIMSBY	524242.57	409957.41	1988		47013	1 Urbis LED	Teceo 48 LED 700mA	104 Watts	8.00 Metres	Steel	
Y	60	STREET LIGHTING	CROMWELL ROAD	GRIMSBY	524223.61	409950.96	1988		47014	1 Urbis LED	Teceo 48 LED 700mA	104 Watts	8.00 Metres	Steel	
Y	61	STREET LIGHTING	CROMWELL ROAD	GRIMSBY	524191.21	409972.69	1988		47015	1 Urbis LED	Teceo 24 LED 500mA	40 Watts	8.00 Metres	Galvanised Steel	
Y	62	STREET LIGHTING	CROMWELL ROAD	GRIMSBY	524161.93	409963.21	1988		47016	1 Urbis LED	Teceo 24 LED 500mA	40 Watts	8.00 Metres	Galvanised Steel	
Y	63	STREET LIGHTING	CROMWELL ROAD	GRIMSBY	524134.13	409979.13	1988		47017	1 Urbis LED	Teceo 24 LED 500mA	40 Watts	8.00 Metres	Galvanised Steel	
Y	64	STREET LIGHTING	CROMWELL ROAD	GRIMSBY	524103.01	409965.97	1988		47018	1 Urbis LED	Teceo 24 LED 500mA	40 Watts	8.00 Metres	Galvanised Steel	
Y	65	STREET LIGHTING	CROMWELL ROAD	GRIMSBY	524669.32	409968.27	2022	04/08/2022	68988	Urbis	Teceo 24 LED 500mA	40 Watts	8.00 Metres	Galvanised Steel	
Y	66	STREET LIGHTING	CROMWELL ROAD	GRIMSBY	524046.94	409985.69	2019	13/11/2019	67587	Urbis	Teceo 24 LED 500mA	40 Watts	8.00 Metres	Galvanised Steel	
Y	67	STREET LIGHTING	CROMWELL ROAD	GRIMSBY	523984.7	410016.53	1988		47021	1 Urbis LED	Teceo 24 LED 500mA	40 Watts	8.00 Metres	Steel	
Y	68	STREET LIGHTING	CROMWELL ROAD	GRIMSBY	523962.79	410042.76	1988		47022	1 Urbis LED	Teceo 24 LED 500mA	40 Watts	8.00 Metres	Galvanised Steel	
Y	69	STREET LIGHTING	CROMWELL ROAD	GRIMSBY	523940.69	410071.58	1988		47023	1 Urbis LED	Teceo 24 LED 500mA	40 Watts	8.00 Metres	Steel	
Y	70	STREET LIGHTING	CROMWELL ROAD	GRIMSBY	523929.46	410103.34	1988		47024	1 Urbis LED	Teceo 24 LED 500mA	40 Watts	8.00 Metres	Steel	
Y	71	STREET LIGHTING	CROMWELL ROAD	GRIMSBY	523932.22	410137.68	1988		47025	1 Urbis LED	Teceo 24 LED 500mA	40 Watts	8.00 Metres	Galvanised Steel	
Y	72	STREET LIGHTING	CROMWELL ROAD	GRIMSBY	523949.2	410169.66	2019	13/11/2019	67588	Urbis	Teceo 24 LED 500mA	40 Watts	8.00 Metres	Galvanised Steel	
Y	73	STREET LIGHTING	CROMWELL ROAD	GRIMSBY	523971.99	410190.89	1988		47027	1 Urbis LED	Teceo 24 LED 500mA	40 Watts	8.00 Metres	Steel	
Y	74	STREET LIGHTING	CROMWELL ROAD	GRIMSBY	524001.08	410210.87	1988		47028	1 Urbis LED	Teceo 24 LED 500mA	40 Watts	8.00 Metres	Steel	
Y	75	STREET LIGHTING	CROMWELL ROAD	GRIMSBY	524034.71	410232.52	2019	13/11/2019	67589	Urbis	Teceo 24 LED 500mA	40 Watts	8.00 Metres	Galvanised Steel	
Y	76	STREET LIGHTING	CROMWELL ROAD	GRIMSBY				29/04/2024	69981	Urbis	Teceo 24 LED 500mA	40 Watts	8.00 Metres	Galvanised Steel	
Y	77	STREET LIGHTING	CROMWELL ROAD	GRIMSBY	524081.36	410264.81	1988		47031	1 Urbis LED	Teceo 24 LED 500mA	40 Watts	8.00 Metres	Steel	
Y	78	STREET LIGHTING	CROMWELL ROAD	GRIMSBY	524106.76	410283.46	2024	23/02/2024	69813	Urbis	Teceo 24 LED 500mA	40 Watts	8.00 Metres	Galvanised Steel	
Y	79	STREET LIGHTING	CROMWELL ROAD	GRIMSBY	524141.19	410291.6	1988		47033	1 Urbis LED	Teceo 24 LED 500mA	40 Watts	8.00 Metres	Galvanised Steel	
Y	80	STREET LIGHTING	CROMWELL ROAD	GRIMSBY	524170.83	410288.01	1988		47034	1 Urbis LED	Teceo 24 LED 500mA	40 Watts	8.00 Metres	Steel	
Y	81	STREET LIGHTING	CROMWELL ROAD	GRIMSBY				29/09/2024	70236	Urbis	Teceo 24 LED 500mA	40 Watts	8.00 Metres	Galvanised Steel	
Y	82	STREET LIGHTING	CROMWELL ROAD	GRIMSBY	524236.21	410256.42	2019	13/11/2019	67590	Urbis	Teceo 24 LED 500mA	40 Watts	8.00 Metres	Galvanised Steel	
Y	83	STREET LIGHTING	CROMWELL ROAD	GRIMSBY	524257.92	410242.72	1988		47037	1 Urbis LED	Teceo 24 LED 500mA	40 Watts	8.00 Metres	Steel	
Y	84	STREET LIGHTING	CROMWELL ROAD	GRIMSBY	524285.36	410229.52	2019	13/11/2019	67591	Urbis	Teceo 24 LED 500mA	40 Watts	8.00 Metres	Galvanised Steel	
Y	85	STREET LIGHTING	CROMWELL ROAD	GRIMSBY	524317.94	410211.52	1988		47039	1 Urbis LED	Teceo 24 LED 500mA	40 Watts	8.00 Metres	Steel	
Y	86	STREET LIGHTING	CROMWELL ROAD	GRIMSBY	524347.4	410196.33	1988		47040	1 Urbis LED	Teceo 24 LED 500mA	40 Watts	8.00 Metres	Steel	
Y	87	STREET LIGHTING	CROMWELL ROAD	GRIMSBY				29/09/2024	70237	Urbis	Teceo 24 LED 500mA	40 Watts	8.00 Metres	Galvanised Steel	
Y	88	STREET LIGHTING	CROMWELL ROAD	GRIMSBY				29/04/2024	70238	Urbis	Teceo 24 LED 500mA	40 Watts	8.00 Metres	Galvanised Steel	
Y	89	STREET LIGHTING	CROMWELL ROAD	GRIMSBY				29/04/2024	70239	Urbis	Teceo 24 LED 500mA	40 Watts	8.00 Metres	Galvanised Steel	
Y	90	STREET LIGHTING	CROMWELL ROAD	GRIMSBY	524462.66	410136.4	1988		47044	1 Urbis LED	Teceo 24 LED 500mA	40 Watts	8.00 Metres	Galvanised Steel	
Y	91	STREET LIGHTING	CROMWELL ROAD	GRIMSBY	524492.67	410114.58	1988		47045	1 Urbis LED	Teceo 24 LED 500mA	40 Watts	8.00 Metres	Steel	
Y	92	STREET LIGHTING	CROMWELL ROAD	GRIMSBY				29/04/2024	70240	Urbis	Teceo 24 LED 500mA	40 Watts	8.00 Metres	Galvanised Steel	
Y	94	STREET LIGHTING	CROMWELL ROAD	GRIMSBY				29/04/2024	70241	Urbis	Teceo 24 LED 500mA	40 Watts	8.00 Metres	Galvanised Steel	
Y	95	STREET LIGHTING	CROMWELL ROAD	GRIMSBY	524546.43	409996.56	1988		47048	1 Urbis LED	Teceo 24 LED 500mA	40 Watts	8.00 Metres	Steel	
Y	96	STREET LIGHTING	CROMWELL ROAD	GRIMSBY	524543.67	409963.79	2014		47049	1 Urbis LED	Teceo 24 LED 500mA	40 Watts	8.00 Metres	Galvanised Steel	
Y	97	STREET LIGHTING	CROMWELL ROAD	GRIMSBY				29/04/2024	70242	Urbis	Teceo 24 LED 500mA	40 Watts	8.00 Metres	Galvanised Steel	
Y	98	STREET LIGHTING	CROMWELL ROAD	GRIMSBY	524530.04	409898.16	1988		47051	1 Urbis LED	Teceo 24 LED 500mA	40 Watts	8.00 Metres	Steel	
Y	1	STREET LIGHTING	BERRETT CAR PARK	GRIMSBY	524510.36	409909.74	2003		44094	1 Urbis LED	Teceo 24 LED 500mA	40 Watts	6.00 Metres	Stainless Steel	
Y	1	STREET LIGHTING	CEDAR COURT	GRIMSBY	524456.77	409928.61	1963		45523	Urbis	Axia 16 LED 350mA	19 Watts	5.00 Metres	Steel	
Y	2	STREET LIGHTING	CEDAR COURT	GRIMSBY	524459.94	409906.46	1963		45524	Urbis	Axia 16 LED 350mA	19 Watts	5.00 Metres	Steel	
Y	1	STREET LIGHTING	DARNHOLM COURT	GRIMSBY	524363.49	409942.83	2008		47298	Urbis	Axia 16 LED 350mA	19 Watts	6.00 Metres	Steel	
Y	1	STREET LIGHTING	LOCKTON COURT	GRIMSBY	524453.37	409972.69	2010		52741	Urbis	Axia 16 LED 350mA	19 Watts	6.00 Metres	Steel	
Y	1	STREET LIGHTING	PICKERING COURT	GRIMSBY	524391.41	409994.56	2008		55439	Urbis	Axia 8 LED 350mA	10 Watts	6.00 Metres	Steel	
Y	2	STREET LIGHTING	PICKERING COURT	GRIMSBY	524409.61	409992.45	2008		55440	Urbis	Axia 8 LED 350mA	10 Watts	6.00 Metres	Steel	
Y	3	STREET LIGHTING	PICKERING COURT	GRIMSBY	524417.65	409998.77	2008		55441	1 Urbis LED	Axia 16 LED 500mA	28 Watts	6.00 Metres	Steel	
Y	1	STREET LIGHTING	ST CHADS WALK SOUTH	GRIMSBY	524339.16	409945.83	2018	03/07/2018	57625	Urbis	Axia 8 LED 350mA	10 Watts	6.00 Metres	Steel	
Y	2	STREET LIGHTING	ST CHADS WALK SOUTH	GRIMSBY	524343.4	409972.06	1996		57626	Urbis	Axia 16 LED 350mA	19 Watts	5.00 Metres	Galvanised Steel	
Y	3	STREET LIGHTING	ST CHADS WALK SOUTH	GRIMSBY	524366.04	409996.46	1963		57627	Urbis	Axia 8 LED 350mA	10 Watts	5.00 Metres	Galvanised Steel	
Y	4	STREET LIGHTING	ST CHADS WALK SOUTH	GRIMSBY	524385.01	410016.81	2007		57628	Urbis	Axia 8 LED 350mA	10 Watts	6.00 Metres	Steel	
Y	5	STREET LIGHTING	ST CHADS WALK SOUTH	GRIMSBY	524404.79	410037.48	2022	28/03/2022	68844	Urbis	Teceo 24 LED 500mA	40 Watts	6.00 Metres	Galvanised Steel	
Y	6	STREET LIGHTING	ST CHADS WALK SOUTH	GRIMSBY	524348.19	409998.85	1963		57630	Urbis	Axia 8 LED 350mA	10 Watts	5.00 Metres	Aluminium	
Y	1	STREET LIGHTING	ALLENBY AVENUE	GRIMSBY	525364.46	408970.07	1999		43076	Urbis	Axia 16 LED 350mA	19 Watts	6.00 Metres	Galvanised Steel	
Y	2	STREET LIGHTING	ALLENBY AVENUE	GRIMSBY	525380.41	409000.52	1999		43077	Urbis	Axia 16 LED 350mA	19 Watts	6.00 Metres	Galvanised Steel	
Y	3	STREET LIGHTING	ALLENBY AVENUE	GRIMSBY	525399.14	409011.34	1999		43078	Urbis	Axia 16 LED 350mA	19 Watts	6.00 Metres	Galvanised Steel	
Y	4	STREET LIGHTING	ALLENBY AVENUE	GRIMSBY	525412.82	409032.16	1999		43079	Urbis	Axia 16 LED 350mA	19 Watts	6.00 Metres	Galvanised Steel	
Y	1	STREET LIGHTING	ASHTREE AVENUE	GRIMSBY	525265.5	408911.82	2007		43433	1 Urbis LED	Axia 16 LED 500mA	28 Watts	6.00 Metres	Steel	
Y	2	STREET LIGHTING	ASHTREE AVENUE	GRIMSBY	525304.77	408909.76	2007		43434	1 Urbis LED	Axia 16 LED 500mA	28 Watts	6.00 Metres	Steel	
Y	3	STREET LIGHTING	ASHTREE AVENUE	GRIMSBY	525330.75	408892.25	2007		43435	1 Urbis LED	Axia 16 LED 500mA	28 Watts	6.00 Metres	Steel	
Y	4	STREET LIGHTING	ASHTREE AVENUE	GRIMSBY	525365.78	408892.04	2007		43436	1 Urbis LED	Axia 16 LED 500mA	28 Watts	6.00 Metres	Steel	
Y	5	STREET LIGHTING	ASHTREE AVENUE	GRIMSBY	525395.67	408873.57	2007		43437	1 Urbis LED	Axia 16 LED 500mA	28 Watts	6.00 Metres	Steel	
Y	1	STREET LIGHTING	BARONESS ROAD	GRIMSBY	525031.5	408863.95	2009		43769	Urbis	Axia 16 LED 350mA	19 Watts	6.00 Metres	Steel	
Y	2	STREET LIGHTING	BARONESS ROAD	GRIMSBY	525006.06	408843.63	2009		43770	Urbis	Axia 16 LED 350mA	19 Watts	6.00 Metres	Steel	
Y	3	STREET LIGHTING	BARONESS ROAD	GRIMSBY	524995.73	408812.57	2009		43771	Urbis	Axia 16 LED 350mA	19 Watts	6.00 Metres	Steel	
Y	4	STREET LIGHTING	BARONESS ROAD	GRIMSBY	524975.83	408784.44	2009		43772	Urbis	Axia 16 LED 350mA	19 Watts	6.00 Metres	Steel	
Y	5	STREET LIGHTING	BARONESS ROAD	GRIMSBY	524952.4	408766.55	2009		43773	Urbis	Axia 16 LED 350mA	19 Watts	6.00 Metres	Steel	
Y	1	STREET LIGHTING	BAYTREE AVENUE	GRIMSBY	525302.2	408890.13	2007		43828	Urbis	Axia 16 LED 350mA	19 Watts	6.00 Metres	Steel	
Y	2	STREET LIGHTING	BAYTREE AVENUE	GRIMSBY	525279.44	408863.18	2007		43829	Urbis	Axia 16 LED 350mA	19 Watts	6.00 Metres	Steel	
Y	3	STREET LIGHTING	BAYTREE AVENUE	GRIMSBY	525266.74	408835.91	2007		43830	Urbis	Axia 16 LED 350mA	19 Watts	6.00 Metres	Steel	
Y	4	STREET LIGHTING	BAYTREE AVENUE	GRIMSBY	525262.76	408805.63	2007		43831	Urbis	Axia 16 LED 350mA	19 Watts	6.00 Metres	Steel	
Y	5	STREET LIGHTING	BAYTREE AVENUE	GRIMSBY	525248.35	408774.54	2007		43832	Urbis	Axia 16 LED 350mA	19 Watts	6.00 Metres	Steel	
Y	6	STREET LIGHTING	BAYTREE AVENUE	GRIMSBY	525235.9	408747.62	2007		43833	Urbis	Axia 16 LED 350mA	19 Watts	6.00 Metres	Steel	
Y	1	STREET LIGHTING	BIRCH AVENUE	GRIMSBY	525347.04	408872.97	2001		44150	Urbis	Axia 16 LED 350mA	19 Watts	6.00 Metres	Galvanised Steel	
Y	2	STREET LIGHTING	BIRCH AVENUE	GRIMSBY	525336.01	408852.66	2001		44151	Urbis	Axia 16 LED 350mA	19 Watts	6.00 Metres	Galvanised Steel	
Y	3	STREET LIGHTING	BIRCH AVENUE	GRIMSBY	525334	408828	2001		44152	Urbis	Axia 16 LED 350mA	19 Watts	6.00 Metres	Galvanised Steel	
Y	4	STREET LIGHTING	BIRCH AVENUE	GRIMSBY	525314	408808	2001		44153	Urbis	Axia 16 LED 350mA	19 Watts	6.00 Metres	Galvanised Steel	
Y	5	STREET LIGHTING	BIRCH AVENUE	GRIMSBY	525302.01	408783.26	2001		44154	Urbis	Axia 16 LED 350mA	19 Watts	6.00 Metres	Galvanised Steel	
Y	6	STREET LIGHTING	BIRCH AVENUE	GRIMSBY	525299.4	408755.3	2001		44155	Urbis	Axia 16 LED 350mA	19 Watts	6.00 Metres	Galvanised Steel	
Y	1	STREET LIGHTING	BOWERS AVENUE	GRIMSBY	525562	409459.52	1999		44436	Urbis	Axia 16 LED 350mA	19 Watts	6.00 Metres	Galvanised Steel	
Y	2	STREET LIGHTING	BOWERS AVENUE	GRIMSBY	525537.44	409435.16	1999		44437	Urbis	Axia 16 LED 350mA	19 Watts	6.00 Metres	Galvanised Steel	
Y	3	STREET LIGHTING	BOWERS AVENUE	GRIMSBY	525521.62	409404.34	1999		44438	Urbis	Axia 16 LED 350mA	19 Watts	6.00 Metres	Galvanised Steel	
Y	4	STREET LIGHTING	BOWERS AVENUE	GRIMSBY	525508.58	409379.02	1999		44439	Urbis	Axia 16 LED 350mA	19 Watts	6.00 Metres	Galvanised Steel	
Y	1	STREET LIGHTING	FERN COURT	GRIMSBY	525183.76	409344.86	2013	01/07/2013	67914	1 Urbis LED	Axia 24 LED 500mA	40 Watts	6.00 Metres	Galvanised Steel	
Y	2	STREET LIGHTING	FERN COURT	GRIMSBY	525173.01	409331.73	2013	01/07/2013	67915	1 Urbis LED	Axia 24 LED 500mA	40 Watts	6.00 Metres	Galvanised Steel	
Y	3	STREET LIGHTING	FERN COURT	GRIMSBY	525169.52	409317.01	2013	01/07/2013	67916	1 Urbis LED	Axia 24 LED 500mA	40 Watts	6.00 Metres	Galvanised Steel	
Y	1	STREET LIGHTING	LARCH CRESCENT	GRIMSBY	525208.85	409276.48	2013		66916	1 Urbis LED	Axia 24 LED 500mA	40 Watts	6.00 Metres	Galvanised Steel	
Y	2	STREET LIGHTING	LARCH CRESCENT	GRIMSBY	525223.09	409302.82	2013		66917	1 Urbis LED	Axia 24 LED 500mA	40 Watts	6.00 Metres	Galvanised Steel	
Y	3	STREET LIGHTING	LARCH CRESCENT	GRIMSBY	525235.19	409328.09	2013		66918	1 Urbis LED	Axia 24 LED 500mA	40 Watts	6.00 Metres	Galvanised Steel	
Y	4	STREET LIGHTING	LARCH CRESCENT	GRIMSBY	525230.47	409347.58	2013		66919	1 Urbis LED	Axia 24 LED 500mA	40 Watts	6.00 Metres	Galvanised Steel	
Y	5	STREET LIGHTING	LARCH CRESCENT	GRIMSBY	525208.63	409358.46	2013		66920	1 Urbis LED	Axia 24 LED 500mA	40 Watts	6.00 Metres	Galvanised Steel	
Y	6	STREET LIGHTING	LARCH CRESCENT	GRIMSBY	525181.22	409366.76	2013		66921	1 Urbis LED	Axia 24 LED 500mA	40 Watts	6.00 Metres	Galvanised Steel	
Y	7	STREET LIGHTING	LARCH CRESCENT	GRIMSBY	525154.73	409359.91	2013		66922	1 Urbis LED	Axia 24 LED 500mA	40 Watts	6.00 Metres	Galvanised Steel	
Y	8	STREET LIGHTING	LARCH CRESCENT	GRIMSBY	525143.19	409358.58	2007		57827	1 Urbis LED	Axia 16 LED 500mA	28 Watts	6.00 Metres	Steel	
Y	9	STREET LIGHTING	LARCH CRESCENT	GRIMSBY	525112.39	409358.23	2007		57826	1 Urbis LED	Axia 16 LED 500mA	28 Watts	6.00 Metres	Steel	
Y	10	STREET LIGHTING	LARCH CRESCENT	GRIMSBY	525081.86	409340.2	2007		57825	1 Urbis LED	Axia 16 LED 500mA	28 Watts	6.00 Metres	Steel	
Y	11	STREET LIGHTING	LARCH CRESCENT	GRIMSBY	525073.77	409309.33	2007		57824	1 Urbis LED	Axia 16 LED 500mA	28 Watts	6.00 Metres	Steel	
Y	12	STREET LIGHTING	LARCH CRESCENT	GRIMSBY	525053.56	409290.81	2007		57823	1 Urbis LED	Axia 16 LED 500mA	28 Watts	6.00 Metres	Steel	
Y	1	STREET LIGHTING	SPRUCE AVENUE	GRIMSBY	525352.73	409267.31	2013		66912	1 Urbis LED	Axia 24 LED 500mA	40 Watts	6.00 Metres	Galvanised Steel	
Y	2	STREET LIGHTING	SPRUCE AVENUE	GRIMSBY	525381.05	409251.91	2013		66913	1 Urbis LED	Axia 24 LED 500mA	40 Watts	6.00 Metres	Galvanised Steel	

Y	3	STREET LIGHTING	SPRUCE AVENUE	GRIMSBY	525401.61	409241.78	2013		66914	1 Urbis LED	Axia 24 LED 500mA	40 Watts	6.00 Metres	Galvanised Steel	
Y	4	STREET LIGHTING	SPRUCE AVENUE	GRIMSBY	525423.39	409230.03	2013		66915	1 Urbis LED	Axia 24 LED 500mA	40 Watts	6.00 Metres	Galvanised Steel	
Y	1	STREET LIGHTING	MAGNOLIA STREET	GRIMSBY	525304.87	409220.25	2019	14/01/2019	66925	1 Urbis LED	Axia 24 LED 500mA	40 Watts	6.00 Metres	Galvanised Steel	
Y	2	STREET LIGHTING	MAGNOLIA STREET	GRIMSBY	525329.85	409243.67	2013		66926	1 Urbis LED	Axia 24 LED 500mA	40 Watts	6.00 Metres	Galvanised Steel	
Y	3	STREET LIGHTING	MAGNOLIA STREET	GRIMSBY	525333.01	409273.42	2013		66927	1 Urbis LED	Axia 24 LED 500mA	40 Watts	6.00 Metres	Galvanised Steel	
Y	4	STREET LIGHTING	MAGNOLIA STREET	GRIMSBY	525358.46	409299.17	2013		66928	1 Urbis LED	Axia 24 LED 500mA	40 Watts	6.00 Metres	Galvanised Steel	
Y	1	STREET LIGHTING	INCHMERY ROAD	GRIMSBY	525213.11	409229.47	2009	01/07/2009	67894	Urbis	AXIA 16 LED 480mA	26 Watts	6.00 Metres	Galvanised Steel	
Y	2	STREET LIGHTING	INCHMERY ROAD	GRIMSBY	525203.41	409190.42	2009	01/07/2009	67895	Urbis	AXIA 16 LED 480mA	26 Watts	6.00 Metres	Galvanised Steel	
Y	3	STREET LIGHTING	INCHMERY ROAD	GRIMSBY	525183.17	409176.11	2009	01/07/2009	67896	Urbis	AXIA 16 LED 480mA	26 Watts	6.00 Metres	Galvanised Steel	
Y	1	STREET LIGHTING	HOLLY MEWS	GRIMSBY	525112.56	409198.61	2009	01/07/2009	67900	Urbis	AXIA 16 LED 480mA	26 Watts	6.00 Metres	Galvanised Steel	
Y	2	STREET LIGHTING	HOLLY MEWS	GRIMSBY	525136.74	409190.17	2009	01/07/2009	67899	Urbis	AXIA 16 LED 480mA	26 Watts	6.00 Metres	Galvanised Steel	
Y	3	STREET LIGHTING	HOLLY MEWS	GRIMSBY	525143.55	409174.11	2009	01/07/2009	67901	Urbis	Teceo 32 LED 500mA	52 Watts	6.00 Metres	Galvanised Steel	
Y	4	STREET LIGHTING	HOLLY MEWS	GRIMSBY	525148.61	409220.16	2009	01/07/2009	67898	Urbis	AXIA 16 LED 480mA	26 Watts	6.00 Metres	Galvanised Steel	
Y	5	STREET LIGHTING	HOLLY MEWS	GRIMSBY	525188.67	409201.73	2009	01/07/2009	67897	Urbis	AXIA 16 LED 480mA	26 Watts	6.00 Metres	Galvanised Steel	
Y	1	STREET LIGHTING	BERBERIS WAY	GRIMSBY	525066.07	409105.12	2008	01/07/2008	67908	Urbis	AXIA 16 LED 480mA	26 Watts	6.00 Metres	Galvanised Steel	
Y	2	STREET LIGHTING	BERBERIS WAY	GRIMSBY	525091.69	409094.37	2008	01/07/2008	67909	Urbis	AXIA 16 LED 480mA	26 Watts	6.00 Metres	Galvanised Steel	
Y	3	STREET LIGHTING	BERBERIS WAY	GRIMSBY	525103.12	409068.19	2008	01/07/2008	67910	Urbis	AXIA 16 LED 480mA	26 Watts	6.00 Metres	Galvanised Steel	
Y	1	STREET LIGHTING	SILVER BIRCH PLACE	GRIMSBY	525114.43	409122.18	2008	01/07/2008	67902	Urbis	Teceo 32 LED 500mA	52 Watts	6.00 Metres	Galvanised Steel	
Y	2	STREET LIGHTING	SILVER BIRCH PLACE	GRIMSBY	525142.74	409105.75	2008	01/07/2008	67903	Urbis	AXIA 16 LED 480mA	26 Watts	6.00 Metres	Galvanised Steel	
Y	3	STREET LIGHTING	SILVER BIRCH PLACE	GRIMSBY	525152.81	409082.19	2008	01/07/2008	67904	Urbis	AXIA 16 LED 480mA	26 Watts	6.00 Metres	Galvanised Steel	
Y	4	STREET LIGHTING	SILVER BIRCH PLACE	GRIMSBY	525156.36	409131.43	2008	01/07/2008	67905	Urbis	AXIA 16 LED 480mA	26 Watts	6.00 Metres	Galvanised Steel	
Y	5	STREET LIGHTING	SILVER BIRCH PLACE	GRIMSBY	525180.79	409142.18	2008	01/07/2008	67906	Urbis	AXIA 16 LED 480mA	26 Watts	6.00 Metres	Galvanised Steel	
Y	6	STREET LIGHTING	SILVER BIRCH PLACE	GRIMSBY	525193.48	409116.87	2008	01/07/2008	67907	Urbis	AXIA 16 LED 480mA	26 Watts	6.00 Metres	Galvanised Steel	
Y	1	STREET LIGHTING	ELDER ROAD	GRIMSBY	525032.06	409053.33	2011		47874	Urbis	Axia 16 LED 350mA	19 Watts	6.00 Metres	Steel	
Y	2	STREET LIGHTING	ELDER ROAD	GRIMSBY	525057.69	409037.84	2011		47875	Urbis	Axia 16 LED 350mA	19 Watts	6.00 Metres	Steel	
Y	3	STREET LIGHTING	ELDER ROAD	GRIMSBY	525083.65	409029.84	2011		47876	Urbis	Axia 16 LED 350mA	19 Watts	6.00 Metres	Steel	
Y	4	STREET LIGHTING	ELDER ROAD	GRIMSBY	525111.53	409038.24	2011		47877	Urbis	Axia 16 LED 350mA	19 Watts	6.00 Metres	Steel	
Y	5	STREET LIGHTING	ELDER ROAD	GRIMSBY	525137.96	409047.93	2011		47878	Urbis	Axia 16 LED 350mA	19 Watts	6.00 Metres	Steel	
Y	6	STREET LIGHTING	ELDER ROAD	GRIMSBY	525158.78	409056.28	2011		47879	Urbis	Axia 16 LED 350mA	19 Watts	6.00 Metres	Steel	
Y	7	STREET LIGHTING	ELDER ROAD	GRIMSBY	525160.6	409070.16	2011		47880	Urbis	Axia 16 LED 350mA	19 Watts	6.00 Metres	Steel	
Y	8	STREET LIGHTING	ELDER ROAD	GRIMSBY	525191.53	409083.32	2011		47881	Urbis	Axia 16 LED 350mA	19 Watts	6.00 Metres	Steel	
Y	9	STREET LIGHTING	ELDER ROAD	GRIMSBY	525214.53	409097.58	2011		47882	Urbis	Axia 16 LED 350mA	19 Watts	6.00 Metres	Steel	
Y	10	STREET LIGHTING	ELDER ROAD	GRIMSBY	525237.3	409111.87	2011		47883	Urbis	Axia 16 LED 350mA	19 Watts	6.00 Metres	Steel	
Y	11	STREET LIGHTING	ELDER ROAD	GRIMSBY	525264.52	409129.36	2011		47884	Urbis	Axia 16 LED 350mA	19 Watts	6.00 Metres	Steel	
Y	12	STREET LIGHTING	ELDER ROAD	GRIMSBY	525286.28	409146.63	2011		47885	Urbis	Axia 16 LED 350mA	19 Watts	6.00 Metres	Steel	
Y	13	STREET LIGHTING	ELDER ROAD	GRIMSBY	525308.3	409153.85	2011		47886	Urbis	Axia 16 LED 350mA	19 Watts	6.00 Metres	Steel	
Y	14	STREET LIGHTING	ELDER ROAD	GRIMSBY	525305.57	409184.32	2014		47887	Urbis	Axia 16 LED 350mA	19 Watts	6.00 Metres	Steel	
Y	15	STREET LIGHTING	ELDER ROAD	GRIMSBY	525338.96	409179.02	2013	01/07/2013	67917	1 Urbis LED	Axia 24 LED 500mA	40 Watts	6.00 Metres	Galvanised Steel	
Y	16	STREET LIGHTING	ELDER ROAD	GRIMSBY	525362.42	409196.99	2013	01/07/2013	67918	1 Urbis LED	Axia 24 LED 500mA	40 Watts	6.00 Metres	Galvanised Steel	
Y	17	STREET LIGHTING	ELDER ROAD	GRIMSBY	525374.89	409213.91	2013	01/07/2013	67919	1 Urbis LED	Axia 24 LED 500mA	40 Watts	6.00 Metres	Galvanised Steel	
Y	18	STREET LIGHTING	ELDER ROAD	GRIMSBY	525373.21	409233.77	2013	01/07/2013	67920	1 Urbis LED	Axia 24 LED 500mA	40 Watts	6.00 Metres	Galvanised Steel	
Y	1	STREET LIGHTING	SORREL ROAD	GRIMSBY	525016.94	409088.1	1999		57331	1 Urbis LED	Teceo 48 LED 700mA	104 Watts	8.00 Metres	Steel	
Y	2	STREET LIGHTING	SORREL ROAD	GRIMSBY	525035.29	409119.68	1999		57332	1 Urbis LED	Teceo 48 LED 700mA	104 Watts	8.00 Metres	Steel	
Y	3	STREET LIGHTING	SORREL ROAD	GRIMSBY	525053.71	409150.83	2011		57333	1 Urbis LED	Teceo 48 LED 700mA	104 Watts	8.00 Metres	Steel	
Y	4	STREET LIGHTING	SORREL ROAD	GRIMSBY	525070.61	409180.18	1999		57334	1 Urbis LED	Teceo 48 LED 700mA	104 Watts	8.00 Metres	Steel	
Y	5	STREET LIGHTING	SORREL ROAD	GRIMSBY	525101.57	409205.65	1999		57335	1 Urbis LED	Teceo 48 LED 700mA	104 Watts	8.00 Metres	Steel	
Y	6	STREET LIGHTING	SORREL ROAD	GRIMSBY	525119.09	409233.66	1999		57336	1 Urbis LED	Teceo 48 LED 700mA	104 Watts	8.00 Metres	Steel	
Y	7	STREET LIGHTING	SORREL ROAD	GRIMSBY	525122.16	409264.97	1999		57337	1 Urbis LED	Teceo 48 LED 500mA	79 Watts	8.00 Metres	Steel	
Y	8	STREET LIGHTING	SORREL ROAD	GRIMSBY	525149.34	409284.74	1999		57338	1 Urbis LED	Teceo 48 LED 500mA	79 Watts	8.00 Metres	Steel	
Y	9	STREET LIGHTING	SORREL ROAD	GRIMSBY	525182.51	409276.64	1999		57339	1 Urbis LED	Teceo 48 LED 500mA	79 Watts	8.00 Metres	Steel	
Y	10	STREET LIGHTING	SORREL ROAD	GRIMSBY	525200.91	409252.53	2011		57340	1 Urbis LED	Teceo 48 LED 500mA	79 Watts	8.00 Metres	Steel	
Y	11	STREET LIGHTING	SORREL ROAD	GRIMSBY	525232.41	409249.53	2011		57341	1 Urbis LED	Teceo 48 LED 500mA	79 Watts	8.00 Metres	Steel	
Y	12	STREET LIGHTING	SORREL ROAD	GRIMSBY	525261.37	409233.67	1999		57342	1 Urbis LED	Teceo 48 LED 500mA	79 Watts	8.00 Metres	Steel	
Y	13	STREET LIGHTING	SORREL ROAD	GRIMSBY	525292.38	409204.56	1999		57343	1 Urbis LED	Teceo 48 LED 500mA	79 Watts	8.00 Metres	Steel	
Y	1	STREET LIGHTING	CENTRAL PARADE	GRIMSBY	524961.62	408963.54	1999		45549	1 Urbis LED	Teceo 48 LED 500mA	79 Watts	8.00 Metres	Steel	
Y	2	STREET LIGHTING	CENTRAL PARADE	GRIMSBY	524966.69	409001.83	1999		45550	1 Urbis LED	Teceo 48 LED 500mA	79 Watts	8.00 Metres	Steel	
Y	3	STREET LIGHTING	CENTRAL PARADE	GRIMSBY	524983.52	409031.01	1999		45551	1 Urbis LED	Teceo 48 LED 500mA	79 Watts	8.00 Metres	Steel	
Y	4	STREET LIGHTING	CENTRAL PARADE	GRIMSBY	524999.72	409058.35	1999		45552	1 Urbis LED	Teceo 48 LED 500mA	79 Watts	8.00 Metres	Steel	
Y	1	STREET LIGHTING	WILD CHERRY MEWS	GRIMSBY	525242.78	409132.18	2010	01/07/2010	67911	Urbis	AXIA 16 LED 390mA	21 Watts	6.00 Metres	Galvanised Steel	
Y	2	STREET LIGHTING	WILD CHERRY MEWS	GRIMSBY	525225.72	409151.11	2010	01/07/2010	67922	Urbis	AXIA 16 LED 390mA	21 Watts	6.00 Metres	Galvanised Steel	
Y	3	STREET LIGHTING	WILD CHERRY MEWS	GRIMSBY	525248.59	409176.92	2010	01/07/2010	67912	Urbis	AXIA 16 LED 390mA	21 Watts	6.00 Metres	Galvanised Steel	
Y	4	STREET LIGHTING	WILD CHERRY MEWS	GRIMSBY	525224.91	409191.11	2010	01/07/2010	67913	Urbis	AXIA 16 LED 390mA	21 Watts	6.00 Metres	Galvanised Steel	
Y	1	STREET LIGHTING	CHELMSFORD PLACE	GRIMSBY	525469.96	408777.81	2015	30/07/2015	45755	Urbis	Axia 16 LED 350mA	19 Watts	6.00 Metres	Galvanised Steel	
Y	2	STREET LIGHTING	CHELMSFORD PLACE	GRIMSBY	525493.25	408799.14	1970		45756	Urbis	Axia 16 LED 350mA	19 Watts	5.00 Metres	Galvanised Steel	
Y	1	STREET LIGHTING	CHERRY TREE CRESCENT	GRIMSBY	524590.87	409081.88	2019	10/07/2019	67374	Urbis	AXIA 16 LED 480mA	26 Watts	6.00 Metres	Galvanised Steel	
Y	2	STREET LIGHTING	CHERRY TREE CRESCENT	GRIMSBY	524578.95	409055.81	2019	10/07/2019	67527	Urbis	AXIA 16 LED 480mA	26 Watts	6.00 Metres	Galvanised Steel	
Y	3	STREET LIGHTING	CHERRY TREE CRESCENT	GRIMSBY	524582.14	409022.62	2019	10/07/2019	67528	Urbis	AXIA 16 LED 480mA	26 Watts	6.00 Metres	Galvanised Steel	
Y	4	STREET LIGHTING	CHERRY TREE CRESCENT	GRIMSBY	524595.11	408995.34	2019	10/07/2019	67529	Urbis	AXIA 16 LED 480mA	26 Watts	6.00 Metres	Galvanised Steel	
Y	5	STREET LIGHTING	CHERRY TREE CRESCENT	GRIMSBY	524567.75	408978.12	2019	10/07/2019	67530	Urbis	AXIA 16 LED 480mA	26 Watts	6.00 Metres	Galvanised Steel	
Y	6	STREET LIGHTING	CHERRY TREE CRESCENT	GRIMSBY	524541.23	408979.56	2019	10/07/2019	67531	Urbis	AXIA 16 LED 480mA	26 Watts	6.00 Metres	Galvanised Steel	
Y	7	STREET LIGHTING	CHERRY TREE CRESCENT	GRIMSBY	524516.67	408983.49	2015		45810	Urbis	AXIA 16 LED 480mA	26 Watts	6.00 Metres	Steel	
Y	8	STREET LIGHTING	CHERRY TREE CRESCENT	GRIMSBY	524508	409006	2005		45811	Urbis	AXIA 16 LED 480mA	26 Watts	5.00 Metres	Stainless Steel	
Y	9	STREET LIGHTING	CHERRY TREE CRESCENT	GRIMSBY	524523.41	409031.09	2019	10/07/2019	67532	Urbis	AXIA 16 LED 480mA	26 Watts	6.00 Metres	Galvanised Steel	
Y	10	STREET LIGHTING	CHERRY TREE CRESCENT	GRIMSBY	524502.82	409045.97	2019	10/07/2019	67533	Urbis	AXIA 16 LED 480mA	26 Watts	6.00 Metres	Galvanised Steel	
Y	11	STREET LIGHTING	CHERRY TREE CRESCENT	GRIMSBY	524519.58	409056.35	2019	10/07/2019	67534	Urbis	AXIA 16 LED 480mA	26 Watts	6.00 Metres	Galvanised Steel	
Y	12	STREET LIGHTING	CHERRY TREE CRESCENT	GRIMSBY	524518.07	409076.14	2019	10/07/2019	67535	Urbis	AXIA 16 LED 480mA	26 Watts	6.00 Metres	Galvanised Steel	
Y	13	STREET LIGHTING	CHERRY TREE CRESCENT	GRIMSBY	524541.86	409091.65	2019	10/07/2019	67536	Urbis	AXIA 16 LED 480mA	26 Watts	6.00 Metres	Galvanised Steel	
Y	1	STREET LIGHTING	CHURCH VIEW	GRIMSBY	524292.62	409037.21	2016	13/09/2016	46071	Urbis	Axia 16 LED 350mA	19 Watts	6.00 Metres	Galvanised Steel	
Y	2	STREET LIGHTING	CHURCH VIEW	GRIMSBY	524271.69	409047.09	2004		46072	Urbis	Axia 16 LED 350mA	19 Watts	5.00 Metres	Stainless Steel	
Y	3	STREET LIGHTING	CHURCH VIEW	GRIMSBY	524243.62	409052.09	2019	09/07/2019	67371	Urbis	Axia 16 LED 350mA	19 Watts	6.00 Metres	Galvanised Steel	
Y	4	STREET LIGHTING	CHURCH VIEW	GRIMSBY	524228.48	409072.02	2019	09/07/2019	67526	Urbis	Axia 16 LED 350mA	19 Watts	6.00 Metres	Galvanised Steel	
Y	1	STREET LIGHTING	CLARK AVENUE	GRIMSBY	525516.38	409482.56	1999		46123	Urbis	Axia 16 LED 350mA	19 Watts	6.00 Metres	Galvanised Steel	
Y	2	STREET LIGHTING	CLARK AVENUE	GRIMSBY	525492.84	409459.96	1999		46124	Urbis	Axia 16 LED 350mA	19 Watts	6.00 Metres	Galvanised Steel	
Y	3	STREET LIGHTING	CLARK AVENUE	GRIMSBY	525487.39	409426.1	1999		46125	Urbis	Axia 16 LED 350mA	19 Watts	6.00 Metres	Galvanised Steel	
Y	4	STREET LIGHTING	CLARK AVENUE	GRIMSBY	525462.84	409402.43	1999		46126	Urbis	Axia 16 LED 350mA	19 Watts	6.00 Metres	Galvanised Steel	
Y	1	STREET LIGHTING	CONWAY AVENUE	GRIMSBY	525096.5	409241.15	2007		46615	Urbis	Axia 16 LED 350mA	19 Watts	6.00 Metres	Steel	
Y	2	STREET LIGHTING	CONWAY AVENUE	GRIMSBY	525076.84	409262.83	2007		46616	Urbis	Axia 16 LED 350mA	19 Watts	6.00 Metres	Steel	
Y	3	STREET LIGHTING	CONWAY AVENUE	GRIMSBY	525046.71	409270.23	2007		46617	Urbis	Axia 16 LED 350mA	19 Watts	6.00 Metres	Steel	
Y	4	STREET LIGHTING	CONWAY AVENUE	GRIMSBY	525026.93	409291.95	2007		46618	Urbis	Axia 16 LED 350mA	19 Watts	6.00 Metres	Steel	
Y	1	STREET LIGHTING	CROSS COATES ROAD	GRIMSBY	525264.4	408992.28	2006		47089	1 Urbis LED	Teceo 40 LED 500mA	64 Watts	10.00 Metres	Stainless Steel	
Y	2	STREET LIGHTING	CROSS COATES ROAD	GRIMSBY	525292.45	408982.27	2006		47090	1 Urbis LED	Teceo 40 LED 500mA	64 Watts	8.00 Metres	Stainless Steel	
Y	3	STREET LIGHTING	CROSS COATES ROAD	GRIMSBY	525328.35	408971.8	2006		47091	1 Urbis LED	Teceo 40 LED 500mA	64 Watts	8.00 Metres	Stainless Steel	
Y	4	STREET LIGHTING	CROSS COATES ROAD	GRIMSBY	525359.2	408952.08	2006		47092	1 Urbis LED	Teceo 40 LED 500mA	64 Watts	8.00 Metres	Stainless Steel	
Y	5	STREET LIGHTING	CROSS COATES ROAD	GRIMSBY	525390.49	408942.92	2006		47093	1 Urbis LED	Teceo 40 LED 500mA	64 Watts	8.00 Metres	Stainless Steel	
Y	6	STREET LIGHTING	CROSS COATES ROAD	GRIMSBY	525417.82	408945.08	2006		47094	1 Urbis LED	Teceo 40 LED 500mA	64 Watts	8.00 Metres	Stainless Steel	
Y	7	STREET LIGHTING	CROSS COATES ROAD	GRIMSBY	525454.18	408934.51	2008		47095	1 Urbis LED	Teceo 48 LED 500mA	79 Watts	8.00 Metres	Steel	
Y	8	STREET LIGHTING	CROSS COATES ROAD	GRIMSBY	525480.5	408926.12	2006		47096	1 Urbis LED	Teceo 40 LED 500mA	64 Watts	8.00 Metres	Stainless Steel	
Y	9	STREET LIGHTING	CROSS COATES ROAD	GRIMSBY	525496.69	408912.91	2006		47097	1 Urbis LED	Teceo 40 LED 500mA	64 Watts	8.00 Metres	Stainless Steel	
Y	10	STREET LIGHTING	CROSS COATES ROAD	GRIMSBY	525489.67	408898.14	2006		47098	1 Urbis LED	Teceo 40 LED 500mA	64 Watts	8.00 Metres	Stainless Steel	
Y	1	STREET LIGHTING	CURRY ROAD	GRIMSBY	524670.17	408949.43	2017	30/06/2017	66899	1 Urbis LED	Axia 16 LED 500mA	28 Watts	6.00 Metres	Galvanised Steel	
Y	2	STREET LIGHTING	CURRY ROAD	GRIMSBY	524663.06	408989.08	2017	30/06/2017	47177	1 Urbis LED	Axia 16 LED 500mA	28 Watts	6.00 Metres	Galvanised Steel	
Y	3	STREET LIGHTING	CURRY ROAD	GRIMSBY	524656.26	409029.31	2017	30/06/2017	47178	1 Urbis LED	Axia 16 LED 500mA	28 Watts	6.00 Metres	Galvanised Steel	
Y	4	STREET LIGHTING	CURRY ROAD	GRIMSBY	524661.25	409059.61	1967		47179	1 Urbis LED	Axia 16 LED 500mA	28 Watts	5.00 Metres	Galvanised Steel	
Y	5	STREET LIGHTING	CURRY ROAD	GRIMSBY	524646.94	409086.44	1994		47180	1 Urbis LED	Axia 16 LED 500mA	28 Watts	6.00 Metres	Galvanised Steel	
Y	1	STREET LIGHTING	DOUGLAS AVENUE	GRIMSBY	525348.66	409552.44	2014		47531	1 Urbis LED	Axia 16 LED 500mA	28 Watts	6.00 Metres	Steel	
Y	2	STREET LIGHTING	DOUGLAS AVENUE	GRIMSBY	525320	409515	2002		47532	1 Urbis LED	Axia 16 LED 500mA	28 Watts	6.00 Metres	Galvanised Steel	
Y	3	STREET LIGHTING	DOUGLAS AVENUE	GRIMSBY	525306.94	409475.86	2022	28/09/2022	69016	Urbis	Axia 24 LED 500mA	28 Watts	6.00 Metres	Galvanised Steel	
Y	1	STREET LIGHTING	ELM AVENUE	GRIMSBY	525272.86	408968.65	1995		47961	Urbis	Axia 16 LED 350mA	19 Watts	6.00 Metres	Galvanised Steel	
Y	2	STREET LIGHTING	ELM AVENUE	GRIMSBY	525252.61	408944.03	1995		47962	Urbis	Axia 16 LED 350mA	19 Watts	6.00 Metres	Galvanised Steel	
Y	3	STREET LIGHTING	ELM AVENUE	GRIMSBY	525240.59	408916.62	1995		47963	Urbis	Axia 16 LED 350mA	19 Watts	6.00 Metres	Galvanised Steel	

Y	4	STREET LIGHTING	ELM AVENUE	GRIMSBY	525237.3	408886.12	1995		47964	Urbis	Axia 16 LED 350mA	19 Watts	6.00 Metres	Galvanised Steel	
Y	5	STREET LIGHTING	ELM AVENUE	GRIMSBY	525224.89	408857.64	1995		47965	Urbis	Axia 16 LED 350mA	19 Watts	6.00 Metres	Galvanised Steel	
Y	6	STREET LIGHTING	ELM AVENUE	GRIMSBY	525214.26	408832.64	1995		47966	Urbis	Axia 16 LED 350mA	19 Watts	6.00 Metres	Galvanised Steel	
Y	7	STREET LIGHTING	ELM AVENUE	GRIMSBY	525195.4	408812.33	1995		47967	Urbis	Axia 16 LED 350mA	19 Watts	6.00 Metres	Galvanised Steel	
Y	8	STREET LIGHTING	ELM AVENUE	GRIMSBY	525190.97	408779.16	1995		47968	Urbis	Axia 16 LED 350mA	19 Watts	6.00 Metres	Galvanised Steel	
Y	9	STREET LIGHTING	ELM AVENUE	GRIMSBY	525170.34	408754.67	1995		47969	Urbis	Axia 16 LED 350mA	19 Watts	6.00 Metres	Galvanised Steel	
Y	1	STREET LIGHTING	ETHELSTONE ROAD	GRIMSBY	525415.22	409120.71	1989		48194	Urbis	Axia 16 LED 350mA	19 Watts	5.00 Metres	Galvanised Steel	
Y	2	STREET LIGHTING	ETHELSTONE ROAD	GRIMSBY	525430.79	409102.29	1989		48195	Urbis	Axia 16 LED 350mA	19 Watts	5.00 Metres	Galvanised Steel	
Y	3	STREET LIGHTING	ETHELSTONE ROAD	GRIMSBY	525444.97	409085.77	1989		48196	Urbis	Axia 16 LED 350mA	19 Watts	5.00 Metres	Galvanised Steel	
Y	4	STREET LIGHTING	ETHELSTONE ROAD	GRIMSBY	525461.8	409066.09	1989		48197	Urbis	Axia 16 LED 350mA	19 Watts	5.00 Metres	Galvanised Steel	
Y	1	STREET LIGHTING	FANNYSTONE ROAD	GRIMSBY	525493.95	409187.69	1989		48378	Urbis	Axia 16 LED 350mA	19 Watts	5.00 Metres	Galvanised Steel	
Y	2	STREET LIGHTING	FANNYSTONE ROAD	GRIMSBY	525507.32	409172.46	1989		48379	Urbis	Axia 16 LED 350mA	19 Watts	5.00 Metres	Galvanised Steel	
Y	3	STREET LIGHTING	FANNYSTONE ROAD	GRIMSBY	525521.88	409155.5	1989		48380	Urbis	Axia 16 LED 350mA	19 Watts	5.00 Metres	Galvanised Steel	
Y	4	STREET LIGHTING	FANNYSTONE ROAD	GRIMSBY	525536.31	409138.99	1989		48381	Urbis	Axia 16 LED 350mA	19 Watts	5.00 Metres	Galvanised Steel	
Y	1	STREET LIGHTING	FELSTEAD ROAD	GRIMSBY	524902.41	408880.27	1992		48442	Urbis	Axia 16 LED 350mA	19 Watts	6.00 Metres	Galvanised Steel	
Y	2	STREET LIGHTING	FELSTEAD ROAD	GRIMSBY	524923.8	408859.2	1992		48443	Urbis	Axia 16 LED 350mA	19 Watts	6.00 Metres	Galvanised Steel	
Y	3	STREET LIGHTING	FELSTEAD ROAD	GRIMSBY	524948.49	408844.2	1992		48444	Urbis	Axia 16 LED 350mA	19 Watts	6.00 Metres	Galvanised Steel	
Y	4	STREET LIGHTING	FELSTEAD ROAD	GRIMSBY	524875.96	408887.3	1992		48445	Urbis	Axia 16 LED 350mA	19 Watts	6.00 Metres	Galvanised Steel	
Y	5	STREET LIGHTING	FELSTEAD ROAD	GRIMSBY	524843.55	408896.22	1992		48446	Urbis	Axia 16 LED 350mA	19 Watts	6.00 Metres	Galvanised Steel	
Y	6	STREET LIGHTING	FELSTEAD ROAD	GRIMSBY	524811.91	408897.42	1992		48447	Urbis	Axia 16 LED 350mA	19 Watts	6.00 Metres	Galvanised Steel	
Y	1	STREET LIGHTING	FLETCHER ROAD	GRIMSBY	524819.9	409071.51	2007		48655	Urbis	Axia 16 LED 350mA	19 Watts	6.00 Metres	Stainless Steel	
Y	2	STREET LIGHTING	FLETCHER ROAD	GRIMSBY	524794.22	409079.95	2007		48656	Urbis	Axia 16 LED 350mA	19 Watts	6.00 Metres	Stainless Steel	
Y	3	STREET LIGHTING	FLETCHER ROAD	GRIMSBY	524765.89	409066.31	2007		48657	Urbis	Axia 16 LED 350mA	19 Watts	6.00 Metres	Stainless Steel	
Y	4	STREET LIGHTING	FLETCHER ROAD	GRIMSBY	524731.35	409066.83	2007		48658	Urbis	Axia 16 LED 350mA	19 Watts	6.00 Metres	Stainless Steel	
Y	5	STREET LIGHTING	FLETCHER ROAD	GRIMSBY	524700.52	409044.58	2007		48659	Urbis	Axia 16 LED 350mA	19 Watts	6.00 Metres	Stainless Steel	
Y	6	STREET LIGHTING	FLETCHER ROAD	GRIMSBY	524675.73	409041.93	2007		48660	Urbis	Axia 16 LED 350mA	19 Watts	6.00 Metres	Stainless Steel	
Y	1	STREET LIGHTING	GOSPORT ROAD	GRIMSBY	525148.74	408883.24	1998		49382	Urbis	Axia 16 LED 350mA	19 Watts	6.00 Metres	Galvanised Steel	
Y	2	STREET LIGHTING	GOSPORT ROAD	GRIMSBY	525122.79	408883.93	1998		49383	Urbis	Axia 16 LED 350mA	19 Watts	6.00 Metres	Galvanised Steel	
Y	3	STREET LIGHTING	GOSPORT ROAD	GRIMSBY	525100.76	408866.91	1998		49384	Urbis	Axia 16 LED 350mA	19 Watts	6.00 Metres	Galvanised Steel	
Y	4	STREET LIGHTING	GOSPORT ROAD	GRIMSBY	525074.43	408867.29	2014		49385	Urbis	Axia 16 LED 350mA	19 Watts	6.00 Metres	Galvanised Steel	
Y	1	STREET LIGHTING	GRANGE WALK	GRIMSBY	525173.03	408956.77	1993		49433	Urbis	Axia 16 LED 350mA	19 Watts	6.00 Metres	Galvanised Steel	
Y	2	STREET LIGHTING	GRANGE WALK	GRIMSBY	525182.42	408930.53	1993		49434	Urbis	Axia 16 LED 350mA	19 Watts	6.00 Metres	Galvanised Steel	
Y	3	STREET LIGHTING	GRANGE WALK	GRIMSBY	525172.85	408903.28	1993		49435	Urbis	Axia 16 LED 350mA	19 Watts	6.00 Metres	Galvanised Steel	
Y	4	STREET LIGHTING	GRANGE WALK	GRIMSBY	525162.57	408878.07	1993		49436	Urbis	Axia 16 LED 350mA	19 Watts	6.00 Metres	Galvanised Steel	
Y	5	STREET LIGHTING	GRANGE WALK	GRIMSBY	525152.07	408852.31	1993		49437	Urbis	Axia 16 LED 350mA	19 Watts	6.00 Metres	Galvanised Steel	
Y	6	STREET LIGHTING	GRANGE WALK	GRIMSBY	525140.8	408825.16	1993		49438	Urbis	Axia 16 LED 350mA	19 Watts	6.00 Metres	Galvanised Steel	
Y	7	STREET LIGHTING	GRANGE WALK	GRIMSBY	525130.68	408800.04	1993		49439	Urbis	Axia 16 LED 350mA	19 Watts	6.00 Metres	Galvanised Steel	
Y	1	STREET LIGHTING	KIRMINGTON GARDENS	GRIMSBY	525065.25	409022.53	2007		51913	Urbis	Axia 16 LED 350mA	19 Watts	6.00 Metres	Steel	
Y	2	STREET LIGHTING	KIRMINGTON GARDENS	GRIMSBY	525040.97	408997.15	2007		51914	Urbis	Axia 16 LED 350mA	19 Watts	6.00 Metres	Steel	
Y	1	STREET LIGHTING	LABURNUM DRIVE	GRIMSBY	525385.61	409087.78	2019	10/07/2019	67375	Urbis	AXIA 16 LED 480mA	26 Watts	6.00 Metres	Galvanised Steel	
Y	2	STREET LIGHTING	LABURNUM DRIVE	GRIMSBY	524375.72	409049.37	2019	10/07/2019	67537	Urbis	AXIA 16 LED 480mA	26 Watts	6.00 Metres	Galvanised Steel	
Y	3	STREET LIGHTING	LABURNUM DRIVE	GRIMSBY	524387.46	409018.66	2019	10/07/2019	67538	Urbis	AXIA 16 LED 480mA	26 Watts	6.00 Metres	Galvanised Steel	
Y	4	STREET LIGHTING	LABURNUM DRIVE	GRIMSBY	524376.58	408995.03	2019	10/07/2019	67539	Urbis	AXIA 16 LED 480mA	26 Watts	6.00 Metres	Galvanised Steel	
Y	5	STREET LIGHTING	LABURNUM DRIVE	GRIMSBY	524396.17	408980.13	2019	10/07/2019	67540	Urbis	AXIA 16 LED 480mA	26 Watts	6.00 Metres	Galvanised Steel	
Y	6	STREET LIGHTING	LABURNUM DRIVE	GRIMSBY	524366.22	408975.53	2019	10/07/2019	67541	Urbis	AXIA 16 LED 480mA	26 Watts	6.00 Metres	Galvanised Steel	
Y	7	STREET LIGHTING	LABURNUM DRIVE	GRIMSBY	524343.23	408986.19	2019	10/07/2019	67542	Urbis	AXIA 16 LED 480mA	26 Watts	6.00 Metres	Galvanised Steel	
Y	8	STREET LIGHTING	LABURNUM DRIVE	GRIMSBY	524315.21	408974.38	2019	10/07/2019	67543	Urbis	AXIA 16 LED 480mA	26 Watts	6.00 Metres	Galvanised Steel	
Y	9	STREET LIGHTING	LABURNUM DRIVE	GRIMSBY	524285.08	408983.13	2019	10/07/2019	67544	Urbis	AXIA 16 LED 480mA	26 Watts	6.00 Metres	Galvanised Steel	
Y	10	STREET LIGHTING	LABURNUM DRIVE	GRIMSBY	524250.83	408974.23	2019	10/07/2019	67545	Urbis	AXIA 16 LED 480mA	26 Watts	6.00 Metres	Galvanised Steel	
Y	11	STREET LIGHTING	LABURNUM DRIVE	GRIMSBY	524230.07	408990.88	2019	10/07/2019	67546	Urbis	AXIA 16 LED 480mA	26 Watts	6.00 Metres	Galvanised Steel	
Y	12	STREET LIGHTING	LABURNUM DRIVE	GRIMSBY	524203.14	408996.74	2019	10/07/2019	67547	Urbis	AXIA 16 LED 480mA	26 Watts	6.00 Metres	Galvanised Steel	
Y	13	STREET LIGHTING	LABURNUM DRIVE	GRIMSBY	524194.72	409025.24	2019	10/07/2019	67548	Urbis	AXIA 16 LED 480mA	26 Watts	6.00 Metres	Galvanised Steel	
Y	1	STREET LIGHTING	LIMBER VALE	GRIMSBY	525110.17	408773.52	1999		52533	1 Urbis LED	Axia 16 LED 500mA	28 Watts	6.00 Metres	Galvanised Steel	
Y	2	STREET LIGHTING	LIMBER VALE	GRIMSBY	525101.31	408752.19	1999		52534	1 Urbis LED	Axia 16 LED 500mA	28 Watts	6.00 Metres	Galvanised Steel	
Y	3	STREET LIGHTING	LIMBER VALE	GRIMSBY	525089.92	408723.84	1999		52535	1 Urbis LED	Axia 16 LED 500mA	28 Watts	6.00 Metres	Galvanised Steel	
Y	4	STREET LIGHTING	LIMBER VALE	GRIMSBY	525086	408690.8	1999		52536	1 Urbis LED	Axia 16 LED 500mA	28 Watts	6.00 Metres	Galvanised Steel	
Y	1	STREET LIGHTING	LOMBARD STREET	GRIMSBY	525440.13	409352.69	1998		52750	Urbis	Axia 16 LED 350mA	19 Watts	6.00 Metres	Galvanised Steel	
Y	2	STREET LIGHTING	LOMBARD STREET	GRIMSBY	525419.62	409328.33	1998		52751	Urbis	Axia 16 LED 350mA	19 Watts	6.00 Metres	Galvanised Steel	
Y	3	STREET LIGHTING	LOMBARD STREET	GRIMSBY	525412.91	409300.79	1998		52752	Urbis	Axia 16 LED 350mA	19 Watts	6.00 Metres	Galvanised Steel	
Y	1	STREET LIGHTING	MAPLE AVENUE	GRIMSBY	524477.54	409057.28	2019	09/07/2019	67373	Urbis	Axia 16 LED 350mA	19 Watts	6.00 Metres	Galvanised Steel	
Y	2	STREET LIGHTING	MAPLE AVENUE	GRIMSBY	524448.62	409057.87	2019	09/07/2019	67565	Urbis	Axia 16 LED 350mA	19 Watts	6.00 Metres	Galvanised Steel	
Y	3	STREET LIGHTING	MAPLE AVENUE	GRIMSBY	524452.85	409040.55	2012		53233	Urbis	Axia 16 LED 350mA	19 Watts	6.00 Metres	Steel	
Y	4	STREET LIGHTING	MAPLE AVENUE	GRIMSBY	524449.68	409005.31	2019	09/07/2019	67566	Urbis	Axia 16 LED 350mA	19 Watts	6.00 Metres	Galvanised Steel	
Y	5	STREET LIGHTING	MAPLE AVENUE	GRIMSBY	524420.72	409057.09	1992		53235	Urbis	Axia 16 LED 350mA	19 Watts	6.00 Metres	Galvanised Steel	
Y	6	STREET LIGHTING	MAPLE AVENUE	GRIMSBY	524398.64	409048.11	2019	09/07/2019	67567	Urbis	Axia 16 LED 350mA	19 Watts	6.00 Metres	Galvanised Steel	
Y	1	STREET LIGHTING	MARCUS STREET	GRIMSBY	525084.82	408828.35	2009		53247	Urbis	Axia 16 LED 350mA	19 Watts	6.00 Metres	Steel	
Y	2	STREET LIGHTING	MARCUS STREET	GRIMSBY	525059.12	408807.11	2009		53248	Urbis	Axia 16 LED 350mA	19 Watts	6.00 Metres	Steel	
Y	3	STREET LIGHTING	MARCUS STREET	GRIMSBY	525050.48	408779.06	2009		53249	Urbis	Axia 16 LED 350mA	19 Watts	6.00 Metres	Steel	
Y	4	STREET LIGHTING	MARCUS STREET	GRIMSBY	525034.19	408755.8	2009		53250	Urbis	Axia 16 LED 350mA	19 Watts	6.00 Metres	Steel	
Y	5	STREET LIGHTING	MARCUS STREET	GRIMSBY	525011.09	408738.59	2009		53251	Urbis	Axia 16 LED 350mA	19 Watts	6.00 Metres	Steel	
Y	1	STREET LIGHTING	MEADOW COURT	GRIMSBY	524298.57	409099.68	1996		53469	Urbis	Axia 16 LED 350mA	19 Watts	6.00 Metres	Galvanised Steel	
Y	2	STREET LIGHTING	MEADOW COURT	GRIMSBY	524266.17	409119.36	1968		53470	Urbis	Axia 16 LED 350mA	19 Watts	5.00 Metres	Steel	
Y	1	STREET LIGHTING	NASEBY DRIVE	GRIMSBY	525607.01	409472.94	2020	01/06/2020	67852	Urbis	Teceo 16 LED 500mA	25 Watts	6.00 Metres	Galvanised Steel	
Y	2	STREET LIGHTING	NASEBY DRIVE	GRIMSBY	525650	409472	2001		53922	Urbis	Axia 8 LED 350mA	10 Watts	6.00 Metres	Galvanised Steel	
Y	3	STREET LIGHTING	NASEBY DRIVE	GRIMSBY	525608.41	409497.71	2020	01/06/2020	68044	Urbis	Teceo 16 LED 500mA	25 Watts	6.00 Metres	Galvanised Steel	
Y	4	STREET LIGHTING	NASEBY DRIVE	GRIMSBY	525595.01	409528.21	2020	01/06/2020	67853	Urbis	Axia 8 LED 350mA	10 Watts	6.00 Metres	Steel	
Y	5	STREET LIGHTING	NASEBY DRIVE	GRIMSBY	525618.45	409526.04	2020	01/06/2020	68045	Urbis	Teceo 16 LED 500mA	25 Watts	6.00 Metres	Galvanised Steel	
Y	6	STREET LIGHTING	NASEBY DRIVE	GRIMSBY	525638.32	409525.11	2003		53924	1 Urbis LED	Axia 16 LED 500mA	28 Watts	6.00 Metres	Stainless Steel	
Y	7	STREET LIGHTING	NASEBY DRIVE	GRIMSBY	525709.81	409489.94	2015	30/07/2015	53925	Urbis	Axia 24 LED 500mA	28 Watts	6.00 Metres	Galvanised Steel	
Y	1	STREET LIGHTING	NASEBY GROVE	GRIMSBY	525681.18	409497.78	2020	01/06/2020	67861	Urbis	Axia 16 LED 350mA	19 Watts	6.00 Metres	Galvanised Steel	
Y	2	STREET LIGHTING	NASEBY GROVE	GRIMSBY	525671.14	409478.94	2020	01/06/2020	67862	Urbis	Axia 8 LED 350mA	10 Watts	6.00 Metres	Steel	
Y	3	STREET LIGHTING	NASEBY GROVE	GRIMSBY	525685.02	409455.15	2020	01/06/2020	68046	Urbis	Axia 8 LED 350mA	10 Watts	6.00 Metres	Steel	
Y	4	STREET LIGHTING	NASEBY GROVE	GRIMSBY	525650.57	409502.98			53926	Urbis	Axia 8 LED 350mA	10 Watts	6.00 Metres	Steel	
Y	1	STREET LIGHTING	RICHMOND ROAD	GRIMSBY	525444.95	408917.78	1986		56105	1 Urbis LED	Teceo 16 LED 500mA	28 Watts	6.00 Metres	Galvanised Steel	
Y	2	STREET LIGHTING	RICHMOND ROAD	GRIMSBY	525430.26	408892.03	1986		56106	1 Urbis LED	Teceo 16 LED 500mA	28 Watts	6.00 Metres	Galvanised Steel	
Y	3	STREET LIGHTING	RICHMOND ROAD	GRIMSBY	525418.62	408871.2	1986		56107	1 Urbis LED	Teceo 16 LED 500mA	28 Watts	6.00 Metres	Galvanised Steel	
Y	4	STREET LIGHTING	RICHMOND ROAD	GRIMSBY	525398.75	408834.5	1986		56108	1 Urbis LED	Teceo 16 LED 500mA	28 Watts	6.00 Metres	Galvanised Steel	
Y	5	STREET LIGHTING	RICHMOND ROAD	GRIMSBY	525381.41	408802.73	1986		56109	1 Urbis LED	Teceo 16 LED 500mA	28 Watts	6.00 Metres	Galvanised Steel	
Y	1	STREET LIGHTING	ROSEVEARE AVENUE	GRIMSBY	525514.77	409596.42	1993		56305	Urbis	Axia 16 LED 350mA	19 Watts	6.00 Metres	Galvanised Steel	
Y	2	STREET LIGHTING	ROSEVEARE AVENUE	GRIMSBY	525493.51	409580.78	1993		56306	Urbis	Axia 16 LED 350mA	19 Watts	6.00 Metres	Galvanised Steel	
Y	3	STREET LIGHTING	ROSEVEARE AVENUE	GRIMSBY	525482.75	409560.72	1993		56307	Urbis	Axia 16 LED 350mA	19 Watts	6.00 Metres	Galvanised Steel	
Y	4	STREET LIGHTING	ROSEVEARE AVENUE	GRIMSBY	525471.61	409539.77	1993		56308	Urbis	Axia 16 LED 350mA	19 Watts	6.00 Metres	Galvanised Steel	
Y	5	STREET LIGHTING	ROSEVEARE AVENUE	GRIMSBY	525467.7	409508.49	1993		56309	Urbis	Axia 16 LED 350mA	19 Watts	6.00 Metres	Galvanised Steel	
Y	6	STREET LIGHTING	ROSEVEARE AVENUE	GRIMSBY	525457.58	409488.93	1993		56310	Urbis	Axia 16 LED 350mA	19 Watts	6.00 Metres	Galvanised Steel	
Y	7	STREET LIGHTING	ROSEVEARE AVENUE	GRIMSBY	525445.81	409466.59	1993		56311	Urbis	Axia 16 LED 350mA	19 Watts	6.00 Metres	Galvanised Steel	
Y	8	STREET LIGHTING	ROSEVEARE AVENUE	GRIMSBY	525436.73	409448.74	2021	12/10/2021	68739	Urbis	Axia 16 LED 350mA	19 Watts	6.00 Metres	Galvanised Steel	
Y	9	STREET LIGHTING	ROSEVEARE AVENUE	GRIMSBY	525414.04	409428.75	1993		56313	Urbis	Axia 16 LED 350mA	19 Watts	6.00 Metres	Galvanised Steel	
Y	10	STREET LIGHTING	ROSEVEARE AVENUE	GRIMSBY	525402.52	409407.17	1993		56314	Urbis	Axia 16 LED 350mA	19 Watts	6.00 Metres	Galvanised Steel	
Y	1	STREET LIGHTING	ST ALBANS AVENUE	GRIMSBY	525437.61	409566.19	2004		57560	Urbis	Axia 16 LED 350mA	19 Watts	5.00 Metres	Stainless Steel	
Y	2	STREET LIGHTING	ST ALBANS AVENUE	GRIMSBY	525457.81	409601.92	2015	30/07/2015	57561	Urbis	Axia 16 LED 350mA	19 Watts	6.00 Metres	Galvanised Steel	
Y	1	STREET LIGHTING	ST JAMES AVENUE	GRIMSBY	525114.61	408819.84	2009		57748	Urbis	Axia 16 LED 350mA	19 Watts	6.00 Metres	Steel	
Y	2	STREET LIGHTING	ST JAMES AVENUE	GRIMSBY	525092.88	408845.98	2009		57749	Urbis	Axia 16 LED 350mA	19 Watts	6.00 Metres	Steel	
Y	3	STREET LIGHTING	ST JAMES AVENUE	GRIMSBY	525058.26	408858.51	2007		57750	Urbis	Axia 16 LED 350mA	19 Watts	6.00 Metres	Steel	
Y	4	STREET LIGHTING	ST JAMES AVENUE	GRIMSBY	525046.02	408883.69	2009		57751	Urbis	Axia 16 LED 350mA	19 Watts	6.00 Metres	Steel	
Y	5	STREET LIGHTING	ST JAMES AVENUE	GRIMSBY	525037.71	408905.52	2009		57752	Urbis	Axia 16 LED 350mA	19 Watts	6.00 Metres	Steel	
Y	1	STREET LIGHTING	ST LEONARDS AVENUE	GRIMSBY	525361.86	409610.65	1980		57792	Urbis	Axia 16 LED 350mA	19 Watts	6.00 Metres	Galvanised Steel	
Y	2	STREET LIGHTING	ST LEONARDS AVENUE	GRIMSBY	525379.71	409642.86	1980		57793	Urbis	Axia 16 LED 350mA	19 Watts	6.00 Metres	Galvanised Steel	
Y	1	STREET LIGHTING	FINCHLEY COURT	GRIMSBY	525260.37	409663.89	2002		48574	Urbis	Axia 16 LED 350mA	19 Watts	5.00 Metres	Stainless Steel	
Y	2	STREET LIGHTING	FINCHLEY COURT	GRIMSBY	525276.36	409687.33	2002		48575	Urbis	Axia 16 LED 350mA	19 Watts	5.00 Metres	Stainless Steel	
Y	3	STREET LIGHTING	FINCHLEY COURT	GRIMSBY	525291.06	409677.61	2002		48576	Urbis	Axia 16 LED 350mA	19 Watts	5.00 Metres	Stainless Steel	

Y	4	STREET LIGHTING	FINCHLEY COURT	GRIMSBY	525311.65	409659.43	2002		48577	Urbis	Axia 16 LED 350mA	19 Watts	5.00 Metres	Stainless Steel	
Y	5	STREET LIGHTING	FINCHLEY COURT	GRIMSBY	525323.09	409662.56	2002		48578	Urbis	Axia 16 LED 350mA	19 Watts	5.00 Metres	Stainless Steel	
Y	6	STREET LIGHTING	FINCHLEY COURT	GRIMSBY	525330.17	409647.42	2002		48579	Urbis	Axia 16 LED 350mA	19 Watts	5.00 Metres	Stainless Steel	
Y	1	STREET LIGHTING	SPARK STREET	GRIMSBY	525371.19	409322.74	1993		57451	Urbis	Axia 16 LED 350mA	19 Watts	6.00 Metres	Galvanised Steel	
Y	2	STREET LIGHTING	SPARK STREET	GRIMSBY	525380.05	409340.27	1993		57452	Urbis	Axia 16 LED 350mA	19 Watts	6.00 Metres	Galvanised Steel	
Y	3	STREET LIGHTING	SPARK STREET	GRIMSBY	525390.3	409359.64	1993		57453	Urbis	Axia 16 LED 350mA	19 Watts	6.00 Metres	Galvanised Steel	
Y	4	STREET LIGHTING	SPARK STREET	GRIMSBY	525399.29	409377.86	1993		57454	Urbis	Axia 16 LED 350mA	19 Watts	6.00 Metres	Galvanised Steel	
Y	1	STREET LIGHTING	SPRING BANK	GRIMSBY	525546.82	409279.83	1993		57474	Urbis	Axia 16 LED 350mA	19 Watts	6.00 Metres	Galvanised Steel	
Y	2	STREET LIGHTING	SPRING BANK	GRIMSBY	525534.29	409304.7	1993		57475	Urbis	Axia 16 LED 350mA	19 Watts	6.00 Metres	Galvanised Steel	
Y	3	STREET LIGHTING	SPRING BANK	GRIMSBY	525507.2	409314.45	1993		57476	Urbis	Axia 16 LED 350mA	19 Watts	6.00 Metres	Galvanised Steel	
Y	4	STREET LIGHTING	SPRING BANK	GRIMSBY	525494.92	409338.88	1993		57477	Urbis	Axia 16 LED 350mA	19 Watts	6.00 Metres	Galvanised Steel	
Y	5	STREET LIGHTING	SPRING BANK	GRIMSBY	525469.73	409344.13	1993		57478	Urbis	Axia 16 LED 350mA	19 Watts	6.00 Metres	Galvanised Steel	
Y	6	STREET LIGHTING	SPRING BANK	GRIMSBY	525452.52	409365.84	1993		57479	Urbis	Axia 16 LED 350mA	19 Watts	6.00 Metres	Galvanised Steel	
Y	7	STREET LIGHTING	SPRING BANK	GRIMSBY	525425.81	409369.45	1993		57480	Urbis	Axia 16 LED 350mA	19 Watts	6.00 Metres	Galvanised Steel	
Y	8	STREET LIGHTING	SPRING BANK	GRIMSBY	525412.52	409389.51	1993		57481	Urbis	Axia 16 LED 350mA	19 Watts	6.00 Metres	Galvanised Steel	
Y	9	STREET LIGHTING	SPRING BANK	GRIMSBY	525386.7	409391.73	1993		57482	Urbis	Axia 16 LED 350mA	19 Watts	6.00 Metres	Galvanised Steel	
Y	10	STREET LIGHTING	SPRING BANK	GRIMSBY	525369.61	409412.43	1993		57483	Urbis	Axia 16 LED 350mA	19 Watts	6.00 Metres	Galvanised Steel	
Y	11	STREET LIGHTING	SPRING BANK	GRIMSBY	525342.27	409414.77	1993		57484	Urbis	Axia 16 LED 350mA	19 Watts	6.00 Metres	Galvanised Steel	
Y	12	STREET LIGHTING	SPRING BANK	GRIMSBY	525323.79	409436.98	1993		57485	Urbis	Axia 16 LED 350mA	19 Watts	6.00 Metres	Galvanised Steel	
Y	13	STREET LIGHTING	SPRING BANK	GRIMSBY	525295.57	409439.83	1993		57486	Urbis	Axia 16 LED 350mA	19 Watts	6.00 Metres	Galvanised Steel	
Y	14	STREET LIGHTING	SPRING BANK	GRIMSBY	525272.02	409452.3	1993		57487	Urbis	Axia 16 LED 350mA	19 Watts	6.00 Metres	Galvanised Steel	
Y	15	STREET LIGHTING	SPRING BANK	GRIMSBY	525256.58	409471.6	1993		57488	Urbis	Axia 16 LED 350mA	19 Watts	6.00 Metres	Galvanised Steel	
Y	16	STREET LIGHTING	SPRING BANK	GRIMSBY	525232.15	409482.81	1993		57489	Urbis	Axia 16 LED 350mA	19 Watts	6.00 Metres	Galvanised Steel	
Y	17	STREET LIGHTING	SPRING BANK	GRIMSBY	525203.16	409486.03	1993		57490	Urbis	Axia 16 LED 350mA	19 Watts	6.00 Metres	Galvanised Steel	
Y	18	STREET LIGHTING	SPRING BANK	GRIMSBY	525183.29	409508.44	1993		57491	Urbis	Axia 16 LED 350mA	19 Watts	6.00 Metres	Galvanised Steel	
Y	19	STREET LIGHTING	SPRING BANK	GRIMSBY	525165.07	409518.31	1993		57492	Urbis	Axia 16 LED 350mA	19 Watts	6.00 Metres	Galvanised Steel	
Y	20	STREET LIGHTING	SPRING BANK	GRIMSBY	525137.85	409520.97	1993		57493	Urbis	Axia 16 LED 350mA	19 Watts	6.00 Metres	Galvanised Steel	
Y	1	STREET LIGHTING	SPRINGWAY CRESCENT	GRIMSBY	525315.45	409418.57	1993		57539	Urbis	Axia 16 LED 350mA	19 Watts	6.00 Metres	Galvanised Steel	
Y	2	STREET LIGHTING	SPRINGWAY CRESCENT	GRIMSBY	525298.86	409401.11	1993		57540	Urbis	Axia 16 LED 350mA	19 Watts	6.00 Metres	Galvanised Steel	
Y	3	STREET LIGHTING	SPRINGWAY CRESCENT	GRIMSBY	525274.43	409407.88	1993		57541	Urbis	Axia 16 LED 350mA	19 Watts	6.00 Metres	Galvanised Steel	
Y	4	STREET LIGHTING	SPRINGWAY CRESCENT	GRIMSBY	525252.16	409411.36	1993		57542	Urbis	Axia 16 LED 350mA	19 Watts	6.00 Metres	Galvanised Steel	
Y	5	STREET LIGHTING	SPRINGWAY CRESCENT	GRIMSBY	525226.08	409425.34	1993		57543	Urbis	Axia 16 LED 350mA	19 Watts	6.00 Metres	Galvanised Steel	
Y	6	STREET LIGHTING	SPRINGWAY CRESCENT	GRIMSBY	525203.93	409437.24	1993		57544	Urbis	Axia 16 LED 350mA	19 Watts	6.00 Metres	Galvanised Steel	
Y	7	STREET LIGHTING	SPRINGWAY CRESCENT	GRIMSBY	525180.64	409440.72	1993		57545	Urbis	Axia 16 LED 350mA	19 Watts	6.00 Metres	Galvanised Steel	
Y	8	STREET LIGHTING	SPRINGWAY CRESCENT	GRIMSBY	525162.03	409459.39	1993		57546	Urbis	Axia 16 LED 350mA	19 Watts	6.00 Metres	Galvanised Steel	
Y	9	STREET LIGHTING	SPRINGWAY CRESCENT	GRIMSBY	525138.99	409475.15	1993		57547	Urbis	Axia 16 LED 350mA	19 Watts	6.00 Metres	Galvanised Steel	
Y	10	STREET LIGHTING	SPRINGWAY CRESCENT	GRIMSBY	525156.71	409500.02	1993		57548	Urbis	Axia 16 LED 350mA	19 Watts	6.00 Metres	Galvanised Steel	
Y	1	STREET LIGHTING	THORNHILL GARDENS	GRIMSBY	525122.03	409394.29	1962		59137	1 Urbis LED	Axia 16 LED 500mA	28 Watts	6.00 Metres	Steel	
Y	2	STREET LIGHTING	THORNHILL GARDENS	GRIMSBY	525114.67	409425.61	2011		59138	1 Urbis LED	Axia 16 LED 500mA	28 Watts	6.00 Metres	Steel	
Y	3	STREET LIGHTING	THORNHILL GARDENS	GRIMSBY	525130.95	409421.94	2011		59139	1 Urbis LED	Axia 16 LED 500mA	28 Watts	6.00 Metres	Steel	
Y	4	STREET LIGHTING	THORNHILL GARDENS	GRIMSBY	525145.96	409385.94	1962		59140	1 Urbis LED	Axia 16 LED 500mA	28 Watts	6.00 Metres	Steel	
Y	5	STREET LIGHTING	THORNHILL GARDENS	GRIMSBY	525173.68	409385.24	1962		59141	1 Urbis LED	Axia 16 LED 500mA	28 Watts	6.00 Metres	Steel	
Y	1	STREET LIGHTING	TOOTHILL ROAD	GRIMSBY	524928.05	408942.99	1992		59304	Urbis	Axia 16 LED 350mA	19 Watts	6.00 Metres	Galvanised Steel	
Y	2	STREET LIGHTING	TOOTHILL ROAD	GRIMSBY	524913.75	408918.88	1992		59305	Urbis	Axia 16 LED 350mA	19 Watts	6.00 Metres	Galvanised Steel	
Y	3	STREET LIGHTING	TOOTHILL ROAD	GRIMSBY	524890.59	408897.67	1992		59306	Urbis	Axia 16 LED 350mA	19 Watts	6.00 Metres	Galvanised Steel	
Y	4	STREET LIGHTING	TOOTHILL ROAD	GRIMSBY	524885.78	408871.92	1992		59307	Urbis	Axia 16 LED 350mA	19 Watts	6.00 Metres	Galvanised Steel	
Y	5	STREET LIGHTING	TOOTHILL ROAD	GRIMSBY	524865.14	408854.64	1992		59308	Urbis	Axia 16 LED 350mA	19 Watts	6.00 Metres	Galvanised Steel	
Y	1	STREET LIGHTING	TYLER AVENUE	GRIMSBY	525412.99	409537.27	2015	30/07/2015	66416	Urbis	Axia 16 LED 350mA	19 Watts	6.00 Metres	Galvanised Steel	
Y	2	STREET LIGHTING	TYLER AVENUE	GRIMSBY	525394.88	409521.73	2015	30/07/2015	59498	Urbis	Axia 16 LED 350mA	19 Watts	6.00 Metres	Galvanised Steel	
Y	3	STREET LIGHTING	TYLER AVENUE	GRIMSBY	525381.57	409480.35	2015	30/07/2015	59499	Urbis	Axia 16 LED 350mA	19 Watts	6.00 Metres	Galvanised Steel	
Y	4	STREET LIGHTING	TYLER AVENUE	GRIMSBY	525359.29	409445.23	2015	30/07/2015	59500	Urbis	Axia 16 LED 350mA	19 Watts	6.00 Metres	Galvanised Steel	
Y	1	STREET LIGHTING	WALL STREET	GRIMSBY	525481.52	409328.2	1993		59709	Urbis	Axia 16 LED 350mA	19 Watts	5.00 Metres	Galvanised Steel	
Y	2	STREET LIGHTING	WALL STREET	GRIMSBY	525467.09	409300.73	1993		59710	Urbis	Axia 16 LED 350mA	19 Watts	5.00 Metres	Galvanised Steel	
Y	3	STREET LIGHTING	WALL STREET	GRIMSBY	525444.18	409278.46	1993		59711	Urbis	Axia 16 LED 350mA	19 Watts	5.00 Metres	Galvanised Steel	
Y	1	STREET LIGHTING	WESTHILL ROAD	GRIMSBY	525435.53	408435.46	1987		60519	Urbis	Axia 16 LED 350mA	19 Watts	5.00 Metres	Galvanised Steel	
Y	2	STREET LIGHTING	WESTHILL ROAD	GRIMSBY	525407.18	408446.97	1987		60520	Urbis	Axia 16 LED 350mA	19 Watts	5.00 Metres	Galvanised Steel	
Y	3	STREET LIGHTING	WESTHILL ROAD	GRIMSBY	525378.45	408441.26	1987		60521	Urbis	Axia 16 LED 350mA	19 Watts	5.00 Metres	Galvanised Steel	
Y	4	STREET LIGHTING	WESTHILL ROAD	GRIMSBY	525353.78	408452.49	1987		60522	Urbis	Axia 16 LED 350mA	19 Watts	5.00 Metres	Galvanised Steel	
Y	5	STREET LIGHTING	WESTHILL ROAD	GRIMSBY	525326.72	408455.44	1987		60523	Urbis	Axia 16 LED 350mA	19 Watts	5.00 Metres	Galvanised Steel	
Y	6	STREET LIGHTING	WESTHILL ROAD	GRIMSBY	525299.1	408450.47	1987		60524	Urbis	Axia 16 LED 350mA	19 Watts	5.00 Metres	Galvanised Steel	
Y	7	STREET LIGHTING	WESTHILL ROAD	GRIMSBY	525268.72	408464.92	1987		60525	Urbis	Axia 16 LED 350mA	19 Watts	5.00 Metres	Galvanised Steel	
Y	8	STREET LIGHTING	WESTHILL ROAD	GRIMSBY	525243.68	408460.6	1987		60526	Urbis	Axia 16 LED 350mA	19 Watts	5.00 Metres	Galvanised Steel	
Y	9	STREET LIGHTING	WESTHILL ROAD	GRIMSBY	525214.41	408475.05	1987		60527	Urbis	Axia 16 LED 350mA	19 Watts	5.00 Metres	Galvanised Steel	
Y	10	STREET LIGHTING	WESTHILL ROAD	GRIMSBY	525185.68	408471.28	1987		60528	Urbis	Axia 16 LED 350mA	19 Watts	5.00 Metres	Galvanised Steel	
Y	11	STREET LIGHTING	WESTHILL ROAD	GRIMSBY	525151.25	408486.56	1987		60529	Urbis	Axia 16 LED 350mA	19 Watts	5.00 Metres	Galvanised Steel	
Y	12	STREET LIGHTING	WESTHILL ROAD	GRIMSBY	525139.4	408519.7	1987		60530	Urbis	Axia 16 LED 350mA	19 Watts	5.00 Metres	Galvanised Steel	
Y	13	STREET LIGHTING	WESTHILL ROAD	GRIMSBY	525131.41	408483.41	1987		60531	Urbis	Axia 16 LED 350mA	19 Watts	5.00 Metres	Galvanised Steel	
Y	14	STREET LIGHTING	WESTHILL ROAD	GRIMSBY	525128.1	408456.9	1987		60532	Urbis	Axia 16 LED 350mA	19 Watts	5.00 Metres	Galvanised Steel	
Y	1	STREET LIGHTING	BOULEVARD GARDENS	GRIMSBY	525875.46	409589.58	2001		44408	1 Urbis LED	Axia 16 LED 500mA	28 Watts	6.00 Metres	Galvanised Steel	
Y	2	STREET LIGHTING	BOULEVARD GARDENS	GRIMSBY	525857.16	409553.59	2001		44409	1 Urbis LED	Axia 16 LED 500mA	28 Watts	6.00 Metres	Galvanised Steel	
Y	3	STREET LIGHTING	BOULEVARD GARDENS	GRIMSBY	525837.97	409517.09	2001		44410	1 Urbis LED	Axia 16 LED 500mA	28 Watts	6.00 Metres	Galvanised Steel	
Y	4	STREET LIGHTING	BOULEVARD GARDENS	GRIMSBY	525826.23	409492.83	1963		44411	1 Urbis LED	Axia 16 LED 500mA	28 Watts	5.00 Metres	Steel	
Y	5	STREET LIGHTING	BOULEVARD GARDENS	GRIMSBY	525806.34	409503.72	1963		44412	1 Urbis LED	Axia 16 LED 500mA	28 Watts	5.00 Metres	Steel	
Y	6	STREET LIGHTING	BOULEVARD GARDENS	GRIMSBY	525835.34	409535.58	1963		44413	1 Urbis LED	Axia 16 LED 500mA	28 Watts	5.00 Metres	Steel	
Y	1	STREET LIGHTING	WINCEBY AVENUE	GRIMSBY	525514.93	409579.11	2020	02/06/2020	67855	Urbis	Axia 16 LED 350mA	19 Watts	6.00 Metres	Galvanised Steel	
Y	2	STREET LIGHTING	WINCEBY AVENUE	GRIMSBY	525524.55	409560.07	2020	02/06/2020	68047	Urbis	Axia 16 LED 350mA	19 Watts	6.00 Metres	Galvanised Steel	
Y	3	STREET LIGHTING	WINCEBY AVENUE	GRIMSBY	525539.31	409559.72			68048	Urbis	Axia 16 LED 350mA	19 Watts	6.00 Metres	Steel	
Y	4	STREET LIGHTING	WINCEBY AVENUE	GRIMSBY	525584.02	409561.12	2015	30/07/2015	60794	Urbis	Axia 16 LED 350mA	19 Watts	6.00 Metres	Galvanised Steel	
Y	5	STREET LIGHTING	WINCEBY AVENUE	GRIMSBY	525566.22	409550.42			67856	Urbis	Axia 16 LED 350mA	19 Watts	6.00 Metres	Steel	
Y	6	STREET LIGHTING	WINCEBY AVENUE	GRIMSBY	525553.21	409525.13			68049	Urbis	Axia 16 LED 350mA	19 Watts	6.00 Metres	Steel	
Y	7	STREET LIGHTING	WINCEBY AVENUE	GRIMSBY	525558.22	409497.73	2002		60797	Urbis	Axia 8 LED 350mA	10 Watts	6.00 Metres	Galvanised Steel	
Y	8	STREET LIGHTING	WINCEBY AVENUE	GRIMSBY	525535.47	409509.42			68050	Urbis	Axia 16 LED 350mA	19 Watts	6.00 Metres	Steel	
Y	9	STREET LIGHTING	WINCEBY AVENUE	GRIMSBY	525519	409543	2001		60798	Urbis	Axia 8 LED 350mA	10 Watts	6.00 Metres	Galvanised Steel	
Y	1	STREET LIGHTING	YARBOROUGH ROAD	GRIMSBY	525651.92	409388.44	1993		61335	1 Urbis LED	Teceo 48 LED 700mA	104 Watts	12.00 Metres	Galvanised Steel	
Y	2	STREET LIGHTING	YARBOROUGH ROAD	GRIMSBY	525621.69	409359.22	1993		61336	1 Urbis LED	Teceo 48 LED 700mA	104 Watts	12.00 Metres	Galvanised Steel	
Y	3	STREET LIGHTING	YARBOROUGH ROAD	GRIMSBY	525603.59	409316.31	1993		61337	1 Urbis LED	Teceo 48 LED 700mA	104 Watts	12.00 Metres	Galvanised Steel	
Y	4	STREET LIGHTING	YARBOROUGH ROAD	GRIMSBY	525570.93	409300.3	1993		61338	1 Urbis LED	Teceo 48 LED 700mA	104 Watts	12.00 Metres	Galvanised Steel	
Y	5	STREET LIGHTING	YARBOROUGH ROAD	GRIMSBY	525568.19	409272.47	1993		63000	1 Urbis LED	Teceo 48 LED 700mA	104 Watts	12.00 Metres	Galvanised Steel	
Y	6	STREET LIGHTING	YARBOROUGH ROAD	GRIMSBY	525532.83	409253.91	1993		61339	1 Urbis LED	Teceo 48 LED 700mA	104 Watts	12.00 Metres	Galvanised Steel	
Y	7	STREET LIGHTING	YARBOROUGH ROAD	GRIMSBY	525514.45	409215.46	1993		61340	1 Urbis LED	Teceo 48 LED 700mA	104 Watts	12.00 Metres	Galvanised Steel	
Y	8	STREET LIGHTING	YARBOROUGH ROAD	GRIMSBY	525475.34	409198.19	1993		61341	1 Urbis LED	Teceo 48 LED 700mA	104 Watts	12.00 Metres	Galvanised Steel	
Y	9	STREET LIGHTING	YARBOROUGH ROAD	GRIMSBY	525456.47	409164.9	1993		61342	1 Urbis LED	Teceo 48 LED 700mA	104 Watts	12.00 Metres	Galvanised Steel	
Y	10	STREET LIGHTING	YARBOROUGH ROAD	GRIMSBY	525420.02	409150.15	1993		61343	1 Urbis LED	Teceo 48 LED 700mA	104 Watts	12.00 Metres	Galvanised Steel	
Y	11	STREET LIGHTING	YARBOROUGH ROAD	GRIMSBY	525395.21	409111.67	2016		61344	1 Urbis LED	Teceo 48 LED 700mA	104 Watts	12.00 Metres	Galvanised Steel	
Y	12	STREET LIGHTING	YARBOROUGH ROAD	GRIMSBY	525352.3	409092.3	1999		61345	1 Urbis LED	Teceo 48 LED 700mA	104 Watts	12.00 Metres	Galvanised Steel	
Y	13	STREET LIGHTING	YARBOROUGH ROAD	GRIMSBY	525331.03	409057.74	1993		61346	1 Urbis LED	Teceo 48 LED 700mA	104 Watts	12.00 Metres	Galvanised Steel	
Y	14	STREET LIGHTING	YARBOROUGH ROAD	GRIMSBY	525290.4	409040.21	1993		61347	1 Urbis LED	Teceo 48 LED 700mA	104 Watts	12.00 Metres	Galvanised Steel	
Y	15	STREET LIGHTING	YARBOROUGH ROAD	GRIMSBY	525267.11	409007.93	1993		61348	1 Urbis LED	Teceo 48 LED 700mA	104 Watts	12.00 Metres	Galvanised Steel	
Y	16	STREET LIGHTING	YARBOROUGH ROAD	GRIMSBY	525225.08	409001.64	1993		61349	1 Urbis LED	Teceo 48 LED 700mA	104 Watts	12.00 Metres	Galvanised Steel	
Y	17	STREET LIGHTING	YARBOROUGH ROAD	GRIMSBY	525212.55	408979.68	1993		61350	1 Urbis LED	Teceo 48 LED 700mA	104 Watts	12.00 Metres	Galvanised Steel	
Y	18	STREET LIGHTING	YARBOROUGH ROAD	GRIMSBY	525178.88	408983.03	1993		61351	1 Urbis LED	Teceo 48 LED 700mA	104 Watts	12.00 Metres	Galvanised Steel	
Y	19	STREET LIGHTING	YARBOROUGH ROAD	GRIMSBY	525152.67	408957.27	1993		61352	1 Urbis LED	Teceo 48 LED 700mA	104 Watts	12.00 Metres	Galvanised Steel	
Y	20	STREET LIGHTING	YARBOROUGH ROAD	GRIMSBY	525111.79	408943.35	1993		61353	1 Urbis LED	Teceo 48 LED 700mA	104 Watts	12.00 Metres	Galvanised Steel	
Y	21	STREET LIGHTING	YARBOROUGH ROAD	GRIMSBY	525066.73	408943.54	1993		61354	1 Urbis LED	Teceo 48 LED 700mA	104 Watts	12.00 Metres	Galvanised Steel	
Y	22	STREET LIGHTING	YARBOROUGH ROAD	GRIMSBY	525044.2	408920.18	1993		61355	1 Urbis LED	Teceo 48 LED 700mA	104 Watts	12.00 Metres	Galvanised Steel	
Y	23	STREET LIGHTING	YARBOROUGH ROAD	GRIMSBY	525013.94	408913.16	1993		61356	1 Urbis LED	Teceo 48 LED 700mA	104 Watts	12.00 Metres	Galvanised Steel	
Y	24	STREET LIGHTING	YARBOROUGH ROAD	GRIMSBY	524983.14	408918.95	1993		61357	1 Urbis LED	Teceo 48 LED 700mA	104 Watts	12.00 Metres	Galvanised Steel	
Y	25	STREET LIGHTING	YARBOROUGH ROAD	GRIMSBY	524972.89	408942.3	1993		61358	1 Urbis LED	Teceo 48 LED 700mA	104 Watts	12.00 Metres	Galvanised Steel	
Y	26	STREET LIGHTING	YARBOROUGH ROAD	GRIMSBY	524940.11	408944.14	1993		61359	1 Urbis LED	Teceo 48 LED 700mA	104 Watts	12.00 Metres	Galvanised Steel	
Y	27	STREET LIGHTING	YARBOROUGH ROAD	GRIMSBY	524912.89	408977.43	1993		61360	1 Urbis LED	Teceo 48 LED 700mA	104 Watts	12.00 Metres	Galvanised Steel	

Y	28	STREET LIGHTING	YARBOROUGH ROAD	GRIMSBY	524889.85	408970.02	1993		61361	1 Urbis LED	Teceo 48 LED 700mA	104 Watts	12.00 Metres	Galvanised Steel	
Y	29	STREET LIGHTING	YARBOROUGH ROAD	GRIMSBY	524852.64	408991.29	1993		61362	1 Urbis LED	Teceo 48 LED 700mA	104 Watts	12.00 Metres	Galvanised Steel	
Y	30	STREET LIGHTING	YARBOROUGH ROAD	GRIMSBY	524819.85	408991.86	2008		61363	1 Urbis LED	Teceo 48 LED 700mA	104 Watts	12.00 Metres	Steel	
Y	31	STREET LIGHTING	YARBOROUGH ROAD	GRIMSBY	524781.25	408989.51	1993		61364	1 Urbis LED	Teceo 48 LED 700mA	104 Watts	12.00 Metres	Galvanised Steel	
Y	32	STREET LIGHTING	YARBOROUGH ROAD	GRIMSBY	524752.51	408982.74	1993		61365	1 Urbis LED	Teceo 48 LED 700mA	104 Watts	12.00 Metres	Galvanised Steel	
Y	33	STREET LIGHTING	YARBOROUGH ROAD	GRIMSBY	524724.54	408971.66	1993		61366	1 Urbis LED	Teceo 48 LED 700mA	104 Watts	12.00 Metres	Galvanised Steel	
Y	34	STREET LIGHTING	YARBOROUGH ROAD	GRIMSBY	524700.87	408955.9	2013		61367	1 Urbis LED	Teceo 48 LED 700mA	104 Watts	12.00 Metres	Galvanised Steel	
Y	35	STREET LIGHTING	YARBOROUGH ROAD	GRIMSBY	524680.87	408923.25	1993		61368	1 Urbis LED	Teceo 48 LED 700mA	104 Watts	12.00 Metres	Galvanised Steel	
Y	36	STREET LIGHTING	YARBOROUGH ROAD	GRIMSBY	524660.49	408906.47	1993		61369	1 Urbis LED	Teceo 48 LED 700mA	104 Watts	12.00 Metres	Galvanised Steel	
Y	1	STREET LIGHTING	YARROW ROAD	GRIMSBY	524890.83	408992.45	2009		61385	Urbis	Teceo 32 LED 500mA	52 Watts	6.00 Metres	Steel	
Y	2	STREET LIGHTING	YARROW ROAD	GRIMSBY	524876.97	409012.04	2013		61386	Urbis	Teceo 32 LED 500mA	52 Watts	6.00 Metres	Galvanised Steel	
Y	3	STREET LIGHTING	YARROW ROAD	GRIMSBY	524849.63	409043.63	2014		61387	Urbis	Teceo 32 LED 500mA	52 Watts	6.00 Metres	Galvanised Steel	
Y	4	STREET LIGHTING	YARROW ROAD	GRIMSBY	524837.22	409078.69	1996		61388	Urbis	Teceo 32 LED 500mA	52 Watts	6.00 Metres	Galvanised Steel	
Y	5	STREET LIGHTING	YARROW ROAD	GRIMSBY	524810.26	409107.36	2015	30/07/2015	61389	Urbis	Teceo 32 LED 500mA	52 Watts	6.00 Metres	Galvanised Steel	
Y	6	STREET LIGHTING	YARROW ROAD	GRIMSBY	524801.16	409139.73	2019	09/07/2019	67549	Urbis	Teceo 32 LED 500mA	52 Watts	6.00 Metres	Galvanised Steel	
Y	7	STREET LIGHTING	YARROW ROAD	GRIMSBY	524760.6	409160.03	1996		61391	Urbis	AXIA 16 LED 480mA	26 Watts	6.00 Metres	Galvanised Steel	
Y	8	STREET LIGHTING	YARROW ROAD	GRIMSBY	524723.71	409151.7	2019	09/07/2019	67376	Urbis	AXIA 16 LED 480mA	26 Watts	6.00 Metres	Galvanised Steel	
Y	9	STREET LIGHTING	YARROW ROAD	GRIMSBY	524704.66	409148.23	2019	09/07/2019	67550	Urbis	AXIA 16 LED 480mA	26 Watts	6.00 Metres	Galvanised Steel	
Y	10	STREET LIGHTING	YARROW ROAD	GRIMSBY	524674.78	409130.86	1993		61394	Urbis	AXIA 16 LED 480mA	26 Watts	6.00 Metres	Galvanised Steel	
Y	11	STREET LIGHTING	YARROW ROAD	GRIMSBY	524669.4	409109.4	2002		61395	Urbis	AXIA 16 LED 480mA	26 Watts	6.00 Metres	Stainless Steel	
Y	12	STREET LIGHTING	YARROW ROAD	GRIMSBY	524644.52	409107.19	1967		61396	Urbis	AXIA 16 LED 480mA	26 Watts	5.00 Metres	Steel	
Y	13	STREET LIGHTING	YARROW ROAD	GRIMSBY	524628.93	409096.22	2019	09/07/2019	67551	Urbis	AXIA 16 LED 480mA	26 Watts	6.00 Metres	Galvanised Steel	
Y	14	STREET LIGHTING	YARROW ROAD	GRIMSBY	524589.84	409105.16	1996		61398	Urbis	AXIA 16 LED 480mA	26 Watts	6.00 Metres	Galvanised Steel	
Y	15	STREET LIGHTING	YARROW ROAD	GRIMSBY	524569.29	409100.36	2019	09/07/2019	67552	Urbis	AXIA 16 LED 480mA	26 Watts	6.00 Metres	Galvanised Steel	
Y	16	STREET LIGHTING	YARROW ROAD	GRIMSBY	524535.29	409112.57	2016	28/01/2016	61400	Urbis	Teceo 24 LED 500mA	40 Watts	6.00 Metres	Galvanised Steel	
Y	17	STREET LIGHTING	YARROW ROAD	GRIMSBY	524507.92	409119.22	2019	09/07/2019	67553	Urbis	AXIA 16 LED 480mA	26 Watts	6.00 Metres	Galvanised Steel	
Y	18	STREET LIGHTING	YARROW ROAD	GRIMSBY	524475.53	409116.13	2019	09/07/2019	67554	Urbis	AXIA 16 LED 480mA	26 Watts	6.00 Metres	Galvanised Steel	
Y	19	STREET LIGHTING	YARROW ROAD	GRIMSBY	524444.31	409131.1	2019	09/07/2019	67555	Urbis	AXIA 16 LED 480mA	26 Watts	6.00 Metres	Galvanised Steel	
Y	20	STREET LIGHTING	YARROW ROAD	GRIMSBY	524418.04	409126.39	2019	09/07/2019	67556	Urbis	AXIA 16 LED 480mA	26 Watts	6.00 Metres	Galvanised Steel	
Y	21	STREET LIGHTING	YARROW ROAD	GRIMSBY	524385.94	409135.67	2019	09/07/2019	67557	Urbis	Teceo 24 LED 500mA	40 Watts	6.00 Metres	Galvanised Steel	
Y	22	STREET LIGHTING	YARROW ROAD	GRIMSBY	524359.69	409124.83	2019	09/07/2019	67558	Urbis	AXIA 16 LED 480mA	26 Watts	6.00 Metres	Galvanised Steel	
Y	23	STREET LIGHTING	YARROW ROAD	GRIMSBY	524333.63	409128.17	2019	09/07/2019	67559	Urbis	AXIA 16 LED 480mA	26 Watts	6.00 Metres	Galvanised Steel	
Y	24	STREET LIGHTING	YARROW ROAD	GRIMSBY	524320.93	409102.81	2019	09/07/2019	67560	Urbis	AXIA 16 LED 480mA	26 Watts	6.00 Metres	Galvanised Steel	
Y	25	STREET LIGHTING	YARROW ROAD	GRIMSBY	524319	409069.29	2019	09/07/2019	67561	Urbis	AXIA 16 LED 480mA	26 Watts	6.00 Metres	Galvanised Steel	
Y	26	STREET LIGHTING	YARROW ROAD	GRIMSBY	524320.56	409043.63	2019	09/07/2019	67562	Urbis	AXIA 16 LED 480mA	26 Watts	6.00 Metres	Galvanised Steel	
Y	27	STREET LIGHTING	YARROW ROAD	GRIMSBY	524312.23	409017.72	2019	09/07/2019	67563	Urbis	AXIA 16 LED 480mA	26 Watts	6.00 Metres	Galvanised Steel	
Y	28	STREET LIGHTING	YARROW ROAD	GRIMSBY	524322.23	408996.18	2019	09/07/2019	67564	Urbis	AXIA 16 LED 480mA	26 Watts	6.00 Metres	Galvanised Steel	
Y	1	STREET LIGHTING	TOOTHILL GARDENS	GRIMSBY	524796.84	408822.04	1975		59296	Urbis	Axia 16 LED 350mA	19 Watts	6.00 Metres	Galvanised Steel	
Y	2	STREET LIGHTING	TOOTHILL GARDENS	GRIMSBY	524807.22	408838.18	1975		59297	Urbis	Axia 16 LED 350mA	19 Watts	6.00 Metres	Galvanised Steel	
Y	3	STREET LIGHTING	TOOTHILL GARDENS	GRIMSBY	524813.3	408860.52	1975		59298	Urbis	Axia 16 LED 350mA	19 Watts	6.00 Metres	Galvanised Steel	
Y	4	STREET LIGHTING	TOOTHILL GARDENS	GRIMSBY	524845.2	408858.05	1975		59299	Urbis	Axia 16 LED 350mA	19 Watts	6.00 Metres	Galvanised Steel	
Y	5	STREET LIGHTING	TOOTHILL GARDENS	GRIMSBY	524861.85	408841.54	2012		59300	Urbis	Axia 16 LED 350mA	19 Watts	6.00 Metres	Steel	
Y	6	STREET LIGHTING	TOOTHILL GARDENS	GRIMSBY	524880.54	408840.67	1994		59301	Urbis	Axia 16 LED 350mA	19 Watts	5.00 Metres	Galvanised Steel	
Y	7	STREET LIGHTING	TOOTHILL GARDENS	GRIMSBY	524902.86	408827.81	1994		59302	Urbis	Axia 16 LED 350mA	19 Watts	5.00 Metres	Galvanised Steel	
Y	8	STREET LIGHTING	TOOTHILL GARDENS	GRIMSBY	524914.51	408804.83	1975		59303	Urbis	Axia 16 LED 350mA	19 Watts	5.00 Metres	Galvanised Steel	
Y	1	STREET LIGHTING	BARONESS COURT	GRIMSBY	524954.62	408741.47	1993		43765	Urbis	Axia 16 LED 350mA	19 Watts	5.00 Metres	Galvanised Steel	
Y	2	STREET LIGHTING	BARONESS COURT	GRIMSBY	524937.96	408760.19	2000		43766	Urbis	Axia 16 LED 350mA	19 Watts	5.00 Metres	Galvanised Steel	
Y	3	STREET LIGHTING	BARONESS COURT	GRIMSBY	524974.49	408728.55	1993		43767	Urbis	Axia 16 LED 350mA	19 Watts	5.00 Metres	Galvanised Steel	
Y	4	STREET LIGHTING	BARONESS COURT	GRIMSBY	524999.55	408713.87	1993		43768	Urbis	Axia 16 LED 350mA	19 Watts	5.00 Metres	Galvanised Steel	
Y	1	STREET LIGHTING	CLARE COURT	GRIMSBY	525045.8	408494.05	1995		46103	Urbis	Axia 16 LED 350mA	19 Watts	5.00 Metres	Galvanised Steel	
Y	2	STREET LIGHTING	CLARE COURT	GRIMSBY	525063.4	408484.81	1995		46104	Urbis	Axia 16 LED 350mA	19 Watts	5.00 Metres	Galvanised Steel	
Y	3	STREET LIGHTING	CLARE COURT	GRIMSBY	525085.78	408504.79	1995		46105	Urbis	Axia 16 LED 350mA	19 Watts	5.00 Metres	Galvanised Steel	
Y	4	STREET LIGHTING	CLARE COURT	GRIMSBY	525089.94	408523.12	1995		46106	Urbis	Axia 16 LED 350mA	19 Watts	5.00 Metres	Galvanised Steel	
Y	5	STREET LIGHTING	CLARE COURT	GRIMSBY	525071.83	408530	1995		46107	Urbis	Axia 16 LED 350mA	19 Watts	5.00 Metres	Galvanised Steel	
Y	6	STREET LIGHTING	CLARE COURT	GRIMSBY	525064.03	408472.78	1995		46108	Urbis	Axia 16 LED 350mA	19 Watts	5.00 Metres	Galvanised Steel	
Y	7	STREET LIGHTING	CLARE COURT	GRIMSBY	525062.77	408441.08	1995		46109	Urbis	Axia 16 LED 350mA	19 Watts	5.00 Metres	Galvanised Steel	
Y	8	STREET LIGHTING	CLARE COURT	GRIMSBY	525053.53	408423.93	1995		46110	Urbis	Axia 16 LED 350mA	19 Watts	6.00 Metres	Galvanised Steel	
Y	1	STREET LIGHTING	KINGSTON AVENUE	GRIMSBY	525339	408737.86	2014		51854	1 Urbis LED	Axia 16 LED 500mA	28 Watts	6.00 Metres	Galvanised Steel	
Y	2	STREET LIGHTING	KINGSTON AVENUE	GRIMSBY	525360.76	408768.43	2008		51855	1 Urbis LED	Axia 16 LED 500mA	28 Watts	6.00 Metres	Steel	
Y	1	STREET LIGHTING	MAGDALENE ROAD	GRIMSBY	524866.28	408409.04	1993		53073	1 Urbis LED	Teceo 32 LED 500mA	52 Watts	8.00 Metres	Galvanised Steel	
Y	2	STREET LIGHTING	MAGDALENE ROAD	GRIMSBY	524877.17	408443.34	1993		53074	1 Urbis LED	Teceo 32 LED 500mA	52 Watts	8.00 Metres	Galvanised Steel	
Y	3	STREET LIGHTING	MAGDALENE ROAD	GRIMSBY	524880.71	408472.51	1993		53075	1 Urbis LED	Teceo 32 LED 500mA	52 Watts	8.00 Metres	Galvanised Steel	
Y	1	STREET LIGHTING	PEMBROKE ROAD	GRIMSBY	525026.46	408410.56	1980		55257	1 Urbis LED	Teceo 24 LED 500mA	40 Watts	8.00 Metres	Galvanised Steel	
Y	2	STREET LIGHTING	PEMBROKE ROAD	GRIMSBY	525035.8	408439.04	1980		55258	1 Urbis LED	Teceo 24 LED 500mA	40 Watts	8.00 Metres	Galvanised Steel	
Y	3	STREET LIGHTING	PEMBROKE ROAD	GRIMSBY	525023.02	408463.98	1980		55259	1 Urbis LED	Teceo 24 LED 500mA	40 Watts	8.00 Metres	Galvanised Steel	
Y	1	STREET LIGHTING	PETERHOUSE ROAD	GRIMSBY	524995.51	408621.9	2000		55357	1 Urbis LED	Axia 16 LED 500mA	28 Watts	6.00 Metres	Galvanised Steel	
Y	2	STREET LIGHTING	PETERHOUSE ROAD	GRIMSBY	524984.17	408649.04	2000		55358	1 Urbis LED	Axia 16 LED 500mA	28 Watts	6.00 Metres	Galvanised Steel	
Y	3	STREET LIGHTING	PETERHOUSE ROAD	GRIMSBY	524968.53	408668.82	2000		55359	1 Urbis LED	Axia 16 LED 500mA	28 Watts	6.00 Metres	Galvanised Steel	
Y	4	STREET LIGHTING	PETERHOUSE ROAD	GRIMSBY	524944.6	408683.94	2000		55360	1 Urbis LED	Axia 16 LED 500mA	28 Watts	6.00 Metres	Galvanised Steel	
Y	5	STREET LIGHTING	PETERHOUSE ROAD	GRIMSBY	524913.84	408693.49	2000		55361	1 Urbis LED	Axia 16 LED 500mA	28 Watts	6.00 Metres	Galvanised Steel	
Y	6	STREET LIGHTING	PETERHOUSE ROAD	GRIMSBY	524885.61	408680.96	2000		55362	1 Urbis LED	Axia 16 LED 500mA	28 Watts	6.00 Metres	Galvanised Steel	
Y	7	STREET LIGHTING	PETERHOUSE ROAD	GRIMSBY	524857.13	408674.06	2000		55363	1 Urbis LED	Axia 16 LED 500mA	28 Watts	6.00 Metres	Galvanised Steel	
Y	8	STREET LIGHTING	PETERHOUSE ROAD	GRIMSBY	524853.34	408646.26	1989		55364	1 Urbis LED	Axia 16 LED 500mA	28 Watts	6.00 Metres	Galvanised Steel	
Y	9	STREET LIGHTING	PETERHOUSE ROAD	GRIMSBY	524838.65	408623.21	2000		55365	1 Urbis LED	Axia 16 LED 500mA	28 Watts	6.00 Metres	Galvanised Steel	
Y	10	STREET LIGHTING	PETERHOUSE ROAD	GRIMSBY	524841.53	408591.89	2000		55366	1 Urbis LED	Axia 16 LED 500mA	28 Watts	6.00 Metres	Galvanised Steel	
Y	11	STREET LIGHTING	PETERHOUSE ROAD	GRIMSBY	524838.72	408556.27	1995		55367	1 Urbis LED	Axia 16 LED 500mA	28 Watts	6.00 Metres	Galvanised Steel	
Y	12	STREET LIGHTING	PETERHOUSE ROAD	GRIMSBY	524863.28	408536.21	1995		55368	1 Urbis LED	Axia 16 LED 500mA	28 Watts	6.00 Metres	Galvanised Steel	
Y	13	STREET LIGHTING	PETERHOUSE ROAD	GRIMSBY	524875.05	408504	1999		55369	1 Urbis LED	Axia 16 LED 500mA	28 Watts	6.00 Metres	Galvanised Steel	
Y	14	STREET LIGHTING	PETERHOUSE ROAD	GRIMSBY	524898.72	408486.02	1999		55370	1 Urbis LED	Axia 16 LED 500mA	28 Watts	6.00 Metres	Galvanised Steel	
Y	15	STREET LIGHTING	PETERHOUSE ROAD	GRIMSBY	524928.47	408480.13	1995		55371	1 Urbis LED	Axia 16 LED 500mA	28 Watts	6.00 Metres	Galvanised Steel	
Y	16	STREET LIGHTING	PETERHOUSE ROAD	GRIMSBY	524951	408473.17	1995		55372	1 Urbis LED	Axia 16 LED 500mA	28 Watts	6.00 Metres	Galvanised Steel	
Y	17	STREET LIGHTING	PETERHOUSE ROAD	GRIMSBY	524971.63	408473.99	1995		55373	1 Urbis LED	Axia 16 LED 500mA	28 Watts	6.00 Metres	Galvanised Steel	
Y	18	STREET LIGHTING	PETERHOUSE ROAD	GRIMSBY	524999.73	408469.18	1995		55374	1 Urbis LED	Axia 16 LED 500mA	28 Watts	6.00 Metres	Galvanised Steel	
Y	19	STREET LIGHTING	PETERHOUSE ROAD	GRIMSBY	525006.94	408482.97	1995		55375	1 Urbis LED	Axia 16 LED 500mA	28 Watts	6.00 Metres	Galvanised Steel	
Y	20	STREET LIGHTING	PETERHOUSE ROAD	GRIMSBY	525023.78	408480.94	1995		55376	1 Urbis LED	Axia 16 LED 500mA	28 Watts	6.00 Metres	Galvanised Steel	
Y	21	STREET LIGHTING	PETERHOUSE ROAD	GRIMSBY	525028.71	408497.59	1995		55377	1 Urbis LED	Axia 16 LED 500mA	28 Watts	6.00 Metres	Galvanised Steel	
Y	22	STREET LIGHTING	PETERHOUSE ROAD	GRIMSBY	525043.91	408518.29	1995		55378	1 Urbis LED	Axia 16 LED 500mA	28 Watts	6.00 Metres	Galvanised Steel	
Y	1	STREET LIGHTING	ST FRANCIS AVENUE	GRIMSBY	525405.03	409596.47	2015	30/07/2015	57669	Urbis	Axia 16 LED 350mA	19 Watts	6.00 Metres	Galvanised Steel	
Y	2	STREET LIGHTING	ST FRANCIS AVENUE	GRIMSBY	525418.18	409629.34	2015	30/07/2015	57670	Urbis	Axia 16 LED 350mA	19 Watts	6.00 Metres	Galvanised Steel	
Y	1	STREET LIGHTING	DARWIN COURT	GRIMSBY	524979.47	408609.89	2001		47299	1 Urbis LED	Axia 16 LED 500mA	28 Watts	6.00 Metres	Galvanised Steel	
Y	2	STREET LIGHTING	DARWIN COURT	GRIMSBY	524947.34	408608.57	2001		47300	1 Urbis LED	Axia 16 LED 500mA	28 Watts	6.00 Metres	Galvanised Steel	
Y	3	STREET LIGHTING	DARWIN COURT	GRIMSBY	524924.37	408591.22	2001		47301	1 Urbis LED	Axia 16 LED 500mA	28 Watts	6.00 Metres	Galvanised Steel	
Y	4	STREET LIGHTING	DARWIN COURT	GRIMSBY	524947.19	408570.1	2001		47302	1 Urbis LED	Axia 16 LED 500mA	28 Watts	6.00 Metres	Galvanised Steel	
Y	5	STREET LIGHTING	DARWIN COURT	GRIMSBY	524933.42	408534.15	2001		47303	1 Urbis LED	Axia 16 LED 500mA	28 Watts	6.00 Metres	Galvanised Steel	
Y	1	STREET LIGHTING	EMMANUEL COURT	GRIMSBY	524997.82	408593.08	2000		48028	Urbis	Axia 16 LED 350mA	19 Watts	6.00 Metres	Galvanised Steel	
Y	2	STREET LIGHTING	EMMANUEL COURT	GRIMSBY	524998.44	408567.91	2000		48029	Urbis	Axia 16 LED 350mA	19 Watts	6.00 Metres	Galvanised Steel	
Y	1	STREET LIGHTING	ST EDMUNDS COURT	GRIMSBY	524794.43	408721.25	2002		57665	Urbis	Axia 8 LED 350mA	10 Watts	6.00 Metres	Galvanised Steel	
Y	2	STREET LIGHTING	ST EDMUNDS COURT	GRIMSBY	524816.01	408738.89	2002		57666	Urbis	Axia 8 LED 350mA	10 Watts	6.00 Metres	Galvanised Steel	
Y	3	STREET LIGHTING	ST EDMUNDS COURT	GRIMSBY	524839.2	408752.43	2002		57667	Urbis	Axia 8 LED 350mA	10 Watts	6.00 Metres	Galvanised Steel	
Y	4	STREET LIGHTING	ST EDMUNDS COURT	GRIMSBY	524841.59	408733.16	2002		57668	Urbis	Axia 8 LED 350mA	10 Watts	6.00 Metres	Galvanised Steel	
Y	1	STREET LIGHTING	DOWNING CLOSE	GRIMSBY	524841.92	408533.05	1997		47545	Urbis	Axia 16 LED 350mA	19 Watts	5.00 Metres	Galvanised Steel	
Y	2	STREET LIGHTING	DOWNING CLOSE	GRIMSBY	524834.84	408519.57	1997		47546	Urbis	Axia 16 LED 350mA	19 Watts	5.00 Metres	Galvanised Steel	
Y	3	STREET LIGHTING	DOWNING CLOSE	GRIMSBY	524814.08	408522.93	1997		47547	Urbis	Axia 16 LED 350mA	19 Watts	5.00 Metres	Galvanised Steel	
Y	1	STREET LIGHTING	FOXGLOVE GARDENS	GRIMSBY	524820.4	408602.85	1997		48905	Urbis	Axia 16 LED 350mA	19 Watts	5.00 Metres	Galvanised Steel	
Y	2	STREET LIGHTING	FOXGLOVE GARDENS	GRIMSBY	524793.44	408601.52	1997		48906	Urbis	Axia 16 LED 350mA	19 Watts	5.00 Metres	Galvanised Steel	
Y	3	STREET LIGHTING	FOXGLOVE GARDENS	GRIMSBY	524788	408636.34	1997		48907	Urbis	Axia 16 LED 350mA	19 Watts	5.00 Metres	Galvanised Steel	
Y	4	STREET LIGHTING	FOXGLOVE GARDENS	GRIMSBY	524777.75	408616.34	1997		48908	Urbis	Axia 16 LED 350mA	19 Watts	5.00 Metres	Galvanised Steel	
Y	5	STREET LIGHTING	FOXGLOVE GARDENS	GRIMSBY	524771.04	408588.04	1997		48909	Urbis	Axia 16 LED 350mA	19 Watts	5.00 Metres	Galvanised Steel	
Y	6	STREET LIGHTING	FOXGLOVE GARDENS	GRIMSBY	524771.67	408561.27	1997		48910	Urbis	Axia 16 LED 350mA	19 Watts	5.00 Metres	Galvanised Steel	
Y	7	STREET LIGHTING	FOXGLOVE GARDENS	GRIMSBY	524761.04	408547.03	1997		48911	Urbis	Axia 16 LED 350mA	19 Watts	5.00 Metres	Galvanised Steel	

Y	1	STREET LIGHTING	LIMBER COURT	GRIMSBY	525069.2	408678.56	1999		62511	Urbis	Axia 16 LED 350mA	19 Watts	5.00 Metres	Galvanised Steel	
Y	2	STREET LIGHTING	LIMBER COURT	GRIMSBY	525044.32	408698.13	1999		62512	Urbis	Axia 16 LED 350mA	19 Watts	5.00 Metres	Galvanised Steel	
Y	3	STREET LIGHTING	LIMBER COURT	GRIMSBY	525023.49	408706.82	1999		62513	Urbis	Axia 16 LED 350mA	19 Watts	5.00 Metres	Galvanised Steel	
Y	4	STREET LIGHTING	LIMBER COURT	GRIMSBY	525056.86	408671.54	1999		52531	Urbis	Axia 16 LED 350mA	19 Watts	5.00 Metres	Galvanised Steel	
Y	5	STREET LIGHTING	LIMBER COURT	GRIMSBY	525052.3	408652.24	1999		52532	Urbis	Axia 16 LED 350mA	19 Watts	5.00 Metres	Galvanised Steel	
Y	6	STREET LIGHTING	LIMBER COURT	GRIMSBY	525039.51	408631.25	2010		52528	Urbis	Axia 16 LED 350mA	19 Watts	6.00 Metres	Steel	
Y	7	STREET LIGHTING	LIMBER COURT	GRIMSBY	525021.12	408628.21	2021	03/11/2021	52529	Urbis	Axia 16 LED 350mA	19 Watts	6.00 Metres	Steel	
Y	8	STREET LIGHTING	LIMBER COURT	GRIMSBY	525004.34	408623.83	2010		52530	Urbis	Axia 16 LED 350mA	19 Watts	6.00 Metres	Steel	
Y	1	STREET LIGHTING	SOUTH VIEW	GRIMSBY	525064.33	408709.52	1993		57390	1 Urbis LED	Axia 16 LED 500mA	28 Watts	5.00 Metres	Galvanised Steel	
Y	2	STREET LIGHTING	SOUTH VIEW	GRIMSBY	525036.35	408721.23	1993		57391	1 Urbis LED	Axia 16 LED 500mA	28 Watts	5.00 Metres	Galvanised Steel	
Y	3	STREET LIGHTING	SOUTH VIEW	GRIMSBY	524999.37	408740.52	1993		57392	1 Urbis LED	Axia 16 LED 500mA	28 Watts	5.00 Metres	Galvanised Steel	
Y	4	STREET LIGHTING	SOUTH VIEW	GRIMSBY	524971.4	408760.58	1993		57393	1 Urbis LED	Axia 16 LED 500mA	28 Watts	5.00 Metres	Galvanised Steel	
Y	1	STREET LIGHTING	ST CATHERINES COURT	GRIMSBY	524854.08	408570.08	1997		57616	Urbis	Axia 16 LED 350mA	19 Watts	5.00 Metres	Galvanised Steel	
Y	2	STREET LIGHTING	ST CATHERINES COURT	GRIMSBY	524873.95	408584.38	1997		57617	Urbis	Axia 16 LED 350mA	19 Watts	5.00 Metres	Galvanised Steel	
Y	3	STREET LIGHTING	ST CATHERINES COURT	GRIMSBY	524887.37	408589.76	1997		57618	Urbis	Axia 16 LED 350mA	19 Watts	5.00 Metres	Galvanised Steel	
Y	4	STREET LIGHTING	ST CATHERINES COURT	GRIMSBY	524895.72	408569.95	1997		57619	Urbis	Axia 16 LED 350mA	19 Watts	5.00 Metres	Galvanised Steel	
Y	5	STREET LIGHTING	ST CATHERINES COURT	GRIMSBY	524875.47	408563.75	1997		57620	Urbis	Axia 16 LED 350mA	19 Watts	5.00 Metres	Galvanised Steel	
Y	1	STREET LIGHTING	GIRTON ROAD	GRIMSBY	524837.92	408683.41	1996		49270	Urbis	Axia 16 LED 350mA	19 Watts	6.00 Metres	Galvanised Steel	
Y	2	STREET LIGHTING	GIRTON ROAD	GRIMSBY	524808.28	408691.03	2002		49271	Urbis	Axia 16 LED 350mA	19 Watts	6.00 Metres	Galvanised Steel	
Y	3	STREET LIGHTING	GIRTON ROAD	GRIMSBY	524789.18	408708.33	2002		49272	Urbis	Axia 16 LED 350mA	19 Watts	6.00 Metres	Galvanised Steel	
Y	4	STREET LIGHTING	GIRTON ROAD	GRIMSBY	524780.08	408732.47	2002		49273	Urbis	Axia 16 LED 350mA	19 Watts	6.00 Metres	Galvanised Steel	
Y	5	STREET LIGHTING	GIRTON ROAD	GRIMSBY	524783.12	408753.66	2002		49274	Urbis	Axia 16 LED 350mA	19 Watts	6.00 Metres	Galvanised Steel	
Y	1	STREET LIGHTING	ANDERSON STREET	GRIMSBY	526534.49	409424.37	1992		43228	1 Urbis LED	Teceo 24 LED 500mA	40 Watts	6.00 Metres	Galvanised Steel	
Y	2	STREET LIGHTING	ANDERSON STREET	GRIMSBY	526543.35	409449.06	1992		43229	1 Urbis LED	Teceo 24 LED 500mA	40 Watts	6.00 Metres	Galvanised Steel	
Y	3	STREET LIGHTING	ANDERSON STREET	GRIMSBY	526551.33	409472.6	1992		43230	1 Urbis LED	Teceo 24 LED 500mA	40 Watts	6.00 Metres	Galvanised Steel	
Y	4	STREET LIGHTING	ANDERSON STREET	GRIMSBY	526569.18	409492.79	1992		43231	1 Urbis LED	Teceo 16 LED 500mA	28 Watts	6.00 Metres	Galvanised Steel	
Y	5	STREET LIGHTING	ANDERSON STREET	GRIMSBY	526578.29	409518.55	1992		43232	1 Urbis LED	Teceo 24 LED 500mA	40 Watts	6.00 Metres	Galvanised Steel	
Y	1	STREET LIGHTING	ARTHUR STREET	GRIMSBY	526238.78	409795.48	1998		43365	Urbis	Axia 16 LED 350mA	19 Watts	6.00 Metres	Steel	
Y	2	STREET LIGHTING	ARTHUR STREET	GRIMSBY	526212.2	409773.65	1998		43366	Urbis	Axia 16 LED 350mA	19 Watts	6.00 Metres	Steel	
Y	3	STREET LIGHTING	ARTHUR STREET	GRIMSBY	526202.83	409759.09	1998		43367	Urbis	Axia 16 LED 350mA	19 Watts	6.00 Metres	Steel	
Y	4	STREET LIGHTING	ARTHUR STREET	GRIMSBY	526199.8	409734.54	1998		43368	Urbis	Axia 16 LED 350mA	19 Watts	6.00 Metres	Steel	
Y	5	STREET LIGHTING	ARTHUR STREET	GRIMSBY	526176.89	409718.4	1998		43369	Urbis	Axia 16 LED 350mA	19 Watts	6.00 Metres	Steel	
Y	6	STREET LIGHTING	ARTHUR STREET	GRIMSBY	526167.45	409684.23	1998		43370	Urbis	Axia 16 LED 350mA	19 Watts	6.00 Metres	Steel	
Y	7	STREET LIGHTING	ARTHUR STREET	GRIMSBY	526142.76	409665.31	1998		43371	Urbis	Axia 16 LED 350mA	19 Watts	6.00 Metres	Steel	
Y	8	STREET LIGHTING	ARTHUR STREET	GRIMSBY	526126.43	409640.18	1998		43372	Urbis	Axia 16 LED 350mA	19 Watts	6.00 Metres	Steel	
Y	9	STREET LIGHTING	ARTHUR STREET	GRIMSBY	526119.85	409610.63	1998		43373	Urbis	Axia 16 LED 350mA	19 Watts	6.00 Metres	Steel	
Y	10	STREET LIGHTING	ARTHUR STREET	GRIMSBY	526095.04	409590.88	1998		43374	Urbis	Axia 16 LED 350mA	19 Watts	6.00 Metres	Steel	
Y	1	STREET LIGHTING	BOULEVARD AVENUE	GRIMSBY	525714.59	409424.38	1990		44384	Urbis	AXIA 3.2 32 LED 630 mA	62 Watts	10.00 Metres	Galvanised Steel	
Y	2	STREET LIGHTING	BOULEVARD AVENUE	GRIMSBY	525719.53	409452.06	1990		44385	1 Urbis LED	Teceo 48 LED 500mA	79 Watts	10.00 Metres	Galvanised Steel	
Y	3	STREET LIGHTING	BOULEVARD AVENUE	GRIMSBY	525754.33	409470.73	1990		44386	1 Urbis LED	Teceo 48 LED 500mA	79 Watts	10.00 Metres	Galvanised Steel	
Y	4	STREET LIGHTING	BOULEVARD AVENUE	GRIMSBY	525765.98	409502.75	1990		44387	1 Urbis LED	Teceo 48 LED 500mA	79 Watts	10.00 Metres	Galvanised Steel	
Y	5	STREET LIGHTING	BOULEVARD AVENUE	GRIMSBY	525792.05	409517.37	1990		44388	1 Urbis LED	Teceo 48 LED 500mA	79 Watts	10.00 Metres	Galvanised Steel	
Y	6	STREET LIGHTING	BOULEVARD AVENUE	GRIMSBY	525800.41	409542.12	1990		44389	Urbis	AXIA 3.2 32 LED 630 mA	62 Watts	10.00 Metres	Galvanised Steel	
Y	7	STREET LIGHTING	BOULEVARD AVENUE	GRIMSBY	525832.18	409561.36	1990		44390	1 Urbis LED	Teceo 48 LED 500mA	79 Watts	10.00 Metres	Galvanised Steel	
Y	8	STREET LIGHTING	BOULEVARD AVENUE	GRIMSBY	525843.57	409594.77	1990		44391	1 Urbis LED	Teceo 48 LED 500mA	79 Watts	10.00 Metres	Galvanised Steel	
Y	9	STREET LIGHTING	BOULEVARD AVENUE	GRIMSBY	525872.29	409607.18	2020	23/10/2020	68135	Urbis	Teceo 48 LED 700mA	104 Watts	12.00 Metres	Galvanised Steel	
Y	10	STREET LIGHTING	BOULEVARD AVENUE	GRIMSBY	525895.59	409633.06	1990		44393	Urbis	AXIA 3.2 32 LED 630 mA	62 Watts	10.00 Metres	Galvanised Steel	
Y	11	STREET LIGHTING	BOULEVARD AVENUE	GRIMSBY	525914.07	409657.17	1990		44394	1 Urbis LED	Teceo 48 LED 500mA	79 Watts	10.00 Metres	Galvanised Steel	
Y	12	STREET LIGHTING	BOULEVARD AVENUE	GRIMSBY	525932.3	409684.76	1990		44395	1 Urbis LED	Teceo 48 LED 500mA	79 Watts	10.00 Metres	Galvanised Steel	
Y	13	STREET LIGHTING	BOULEVARD AVENUE	GRIMSBY	525948.63	409712.55	1990		44396	1 Urbis LED	Teceo 48 LED 500mA	79 Watts	10.00 Metres	Galvanised Steel	
Y	14	STREET LIGHTING	BOULEVARD AVENUE	GRIMSBY	525959.64	409733.88	1990		44397	1 Urbis LED	Teceo 48 LED 500mA	79 Watts	10.00 Metres	Galvanised Steel	
Y	15	STREET LIGHTING	BOULEVARD AVENUE	GRIMSBY	525974.7	409765.14	1990		44398	Urbis	AXIA 3.2 32 LED 630 mA	62 Watts	10.00 Metres	Galvanised Steel	
Y	16	STREET LIGHTING	BOULEVARD AVENUE	GRIMSBY	525988.37	409795.58	1990		44399	1 Urbis LED	Teceo 48 LED 500mA	79 Watts	10.00 Metres	Galvanised Steel	
Y	17	STREET LIGHTING	BOULEVARD AVENUE	GRIMSBY	526002.12	409828.74	1990		44400	1 Urbis LED	Teceo 48 LED 500mA	79 Watts	10.00 Metres	Galvanised Steel	
Y	18	STREET LIGHTING	BOULEVARD AVENUE	GRIMSBY	526013.64	409858.92	1990		44401	Urbis	AXIA 3.2 32 LED 630 mA	62 Watts	10.00 Metres	Galvanised Steel	
Y	19	STREET LIGHTING	BOULEVARD AVENUE	GRIMSBY	526024.78	409892.09	1990		44402	1 Urbis LED	Teceo 48 LED 500mA	79 Watts	10.00 Metres	Galvanised Steel	
Y	20	STREET LIGHTING	BOULEVARD AVENUE	GRIMSBY	526034.27	409925.57	1990		44403	Urbis	AXIA 3.2 32 LED 630 mA	62 Watts	10.00 Metres	Galvanised Steel	
Y	21	STREET LIGHTING	BOULEVARD AVENUE	GRIMSBY	526027.31	409961.89	1990		44404	Urbis	AXIA 3.2 32 LED 630 mA	62 Watts	10.00 Metres	Galvanised Steel	
Y	22	STREET LIGHTING	BOULEVARD AVENUE	GRIMSBY	526048.5	409985.45	1990		44405	Urbis	AXIA 3.2 32 LED 630 mA	62 Watts	10.00 Metres	Galvanised Steel	
Y	23	STREET LIGHTING	BOULEVARD AVENUE	GRIMSBY	526041.41	410018.49	1990		44406	Urbis	AXIA 3.2 32 LED 630 mA	62 Watts	10.00 Metres	Galvanised Steel	
Y	24	STREET LIGHTING	BOULEVARD AVENUE	GRIMSBY	526059.39	410037.29	1990		44407	1 Urbis LED	Teceo 48 LED 500mA	79 Watts	10.00 Metres	Galvanised Steel	
Y	1	STREET LIGHTING	MACAULAY WAY	GRIMSBY	526071.81	409550.29	1998		53057	Urbis	Axia 16 LED 350mA	19 Watts	5.00 Metres	Galvanised Steel	
Y	2	STREET LIGHTING	MACAULAY WAY	GRIMSBY	526077.76	409514.03	1988		53058	Urbis	Axia 16 LED 350mA	19 Watts	5.00 Metres	Galvanised Steel	
Y	3	STREET LIGHTING	MACAULAY WAY	GRIMSBY	526059.41	409523.33	1963		53059	Urbis	Axia 16 LED 350mA	19 Watts	5.00 Metres	Steel	
Y	4	STREET LIGHTING	MACAULAY WAY	GRIMSBY	526034.17	409531.9	2021	05/10/2021	68728	1 Urbis LED	AXIA 24 LED 490mA		8.00 Metres	Galvanised Steel	
Y	5	STREET LIGHTING	MACAULAY WAY	GRIMSBY	526057.49	409480.06	1988		53061	Urbis	Axia 16 LED 350mA	19 Watts	5.00 Metres	Galvanised Steel	
Y	6	STREET LIGHTING	MACAULAY WAY	GRIMSBY	526032.5	409501.64	1988		53062	Urbis	Axia 8 LED 350mA	10 Watts	5.00 Metres	Galvanised Steel	
Y	7	STREET LIGHTING	MACAULAY WAY	GRIMSBY	526093.43	409537.72	1999		53063	Urbis	Axia 16 LED 350mA	19 Watts	6.00 Metres	Stainless Steel	
Y	1	STREET LIGHTING	CHANTRY LANE	GRIMSBY	526549.15	409242.51	2016	14/10/2016	66936	1 Urbis LED	Teceo 24 LED 500mA	40 Watts	6.00 Metres	WOOD	
Y	2	STREET LIGHTING	CHANTRY LANE	GRIMSBY	526536.81	409247.11	2016	14/10/2016	66937	1 Urbis LED	Teceo 24 LED 500mA	40 Watts	6.00 Metres	WOOD	
Y	3	STREET LIGHTING	CHANTRY LANE	GRIMSBY	526504.87	409243.93	1970		45578	1 Urbis LED	Teceo 16 LED 500mA	28 Watts	6.00 Metres	Galvanised Steel	
Y	4	STREET LIGHTING	CHANTRY LANE	GRIMSBY	526477.02	409250.07	1970		45579	1 Urbis LED	Teceo 16 LED 500mA	28 Watts	6.00 Metres	Galvanised Steel	
Y	5	STREET LIGHTING	CHANTRY LANE	GRIMSBY	526456.14	409265.07	1970		45580	1 Urbis LED	Teceo 16 LED 500mA	28 Watts	6.00 Metres	Galvanised Steel	
Y	6	STREET LIGHTING	CHANTRY LANE	GRIMSBY	526421.71	409276.78	1970		45581	1 Urbis LED	Teceo 16 LED 500mA	28 Watts	6.00 Metres	Galvanised Steel	
Y	7	STREET LIGHTING	CHANTRY LANE	GRIMSBY	526399.3	409277.22	1970		45582	1 Urbis LED	Teceo 16 LED 500mA	28 Watts	6.00 Metres	Galvanised Steel	
Y	8	STREET LIGHTING	CHANTRY LANE	GRIMSBY	526377.15	409299.69	1970		45583	1 Urbis LED	Teceo 16 LED 500mA	28 Watts	6.00 Metres	Galvanised Steel	
Y	9	STREET LIGHTING	CHANTRY LANE	GRIMSBY	526363.75	409326.57	1970		45584	1 Urbis LED	Teceo 16 LED 500mA	28 Watts	6.00 Metres	Galvanised Steel	
Y	10	STREET LIGHTING	CHANTRY LANE	GRIMSBY	526339.7	409349.98	2005		45585	1 Urbis LED	Teceo 16 LED 500mA	28 Watts	6.00 Metres	Stainless Steel	
Y	11	STREET LIGHTING	CHANTRY LANE	GRIMSBY	526315.02	409374.22	1970		45586	1 Urbis LED	Teceo 16 LED 500mA	28 Watts	6.00 Metres	Galvanised Steel	
Y	12	STREET LIGHTING	CHANTRY LANE	GRIMSBY	526283.17	409391.35	1970		45587	1 Urbis LED	Teceo 16 LED 500mA	28 Watts	6.00 Metres	Galvanised Steel	
Y	13	STREET LIGHTING	CHANTRY LANE	GRIMSBY	526263.04	409425.4	2005		45588	1 Urbis LED	Teceo 16 LED 500mA	28 Watts	6.00 Metres	Stainless Steel	
Y	14	STREET LIGHTING	CHANTRY LANE	GRIMSBY	526238.78	409449.33	1970		45589	1 Urbis LED	Teceo 16 LED 500mA	28 Watts	6.00 Metres	Galvanised Steel	
Y	1	STREET LIGHTING	CHANTRY LANE SUBWAY	GRIMSBY	526571.2	409234.95	1970		45590	Thorn		65 Watts	3.00 Metres	Unknown	
Y	2	STREET LIGHTING	CHANTRY LANE SUBWAY	GRIMSBY	526564.36	409182.61	1999		45591	Design Plan		65 Watts	3.00 Metres	Unknown	
Y	3	STREET LIGHTING	CHANTRY LANE SUBWAY	GRIMSBY	526574.64	409233.74	1970		45592	Design Plan		65 Watts	3.00 Metres	Unknown	
Y	4	STREET LIGHTING	CHANTRY LANE SUBWAY	GRIMSBY	526576.16	409233.24	1970		45593	Design Plan		65 Watts	3.00 Metres	Unknown	
Y	5	STREET LIGHTING	CHANTRY LANE SUBWAY	GRIMSBY	526577.93	409232.63	1970		45594	Design Plan		65 Watts	3.00 Metres	Unknown	
Y	6	STREET LIGHTING	CHANTRY LANE SUBWAY	GRIMSBY	526579.7	409231.87	1970		45595	Design Plan		65 Watts	3.00 Metres	Unknown	
Y	1	STREET LIGHTING	THORGAM COURT	GRIMSBY	526141.99	409339.42	2007		59106	1 Urbis LED	Teceo 16 LED 500mA	28 Watts	6.00 Metres	Steel	
Y	2	STREET LIGHTING	THORGAM COURT	GRIMSBY	526162.73	409330.68	2013		59107	1 Urbis LED	Teceo 16 LED 500mA	28 Watts	6.00 Metres	Steel	
Y	3	STREET LIGHTING	THORGAM COURT	GRIMSBY	526176.11	409313.36	2013		59108	1 Urbis LED	Teceo 16 LED 500mA	28 Watts	6.00 Metres	Steel	
Y	4	STREET LIGHTING	THORGAM COURT	GRIMSBY	526202.71	409305.4	2013		59109	1 Urbis LED	Teceo 16 LED 500mA	28 Watts	6.00 Metres	Steel	
Y	5	STREET LIGHTING	THORGAM COURT	GRIMSBY	526220.4	409304.83	1968		59110	1 Urbis LED	Teceo 16 LED 500mA	28 Watts	5.00 Metres	Steel	
Y	1	STREET LIGHTING	CRESCENT STREET	GRIMSBY	526541.55	409327.06	2011		46903	1 Urbis LED	Axia 16 LED 500mA	28 Watts	6.00 Metres	Steel	
Y	2	STREET LIGHTING	CRESCENT STREET	GRIMSBY	526509.6	409344.08	2011		46904	1 Urbis LED	Axia 16 LED 500mA	28 Watts	6.00 Metres	Steel	
Y	3	STREET LIGHTING	CRESCENT STREET	GRIMSBY	526469.32	409345.44	2011		46905	1 Urbis LED	Axia 16 LED 500mA	28 Watts	6.00 Metres	Steel	
Y	4	STREET LIGHTING	CRESCENT STREET	GRIMSBY	526447.84	409366.49	2008		46906	1 Urbis LED	Axia 16 LED 500mA	28 Watts	6.00 Metres	Galvanised Steel	
Y	5	STREET LIGHTING	CRESCENT STREET	GRIMSBY	526419.58	409370.92	2008		46907	1 Urbis LED	Axia 16 LED 500mA	28 Watts	6.00 Metres	Galvanised Steel	
Y	6	STREET LIGHTING	CRESCENT STREET	GRIMSBY	526399.33	409391.05	2011		46908	1 Urbis LED	Axia 16 LED 500mA	28 Watts	6.00 Metres	Steel	
Y	7	STREET LIGHTING	CRESCENT STREET	GRIMSBY	526369.03	409407.25	2011		46909	1 Urbis LED	Axia 16 LED 500mA	28 Watts	6.00 Metres	Steel	
Y	8	STREET LIGHTING	CRESCENT STREET	GRIMSBY	526346.23	409429.52	2011		46910	1 Urbis LED	Axia 16 LED 500mA	28 Watts	6.00 Metres	Steel	
Y	1	STREET LIGHTING	DOVER STREET	GRIMSBY	526482.48	409520.41	2011		47541	Urbis	Axia 16 LED 350mA	19 Watts	6.00 Metres	Steel	
Y	2	STREET LIGHTING	DOVER STREET	GRIMSBY	526465.76	409537.26	2011	22/08/2011	47542	Urbis	Axia 16 LED 350mA	19 Watts	6.00 Metres	Galvanised Steel	
Y	3	STREET LIGHTING	DOVER STREET	GRIMSBY	526433.82	409556.34	2011		47543	Urbis	Axia 16 LED 350mA	19 Watts	6.00 Metres	Steel	
Y	4	STREET LIGHTING	DOVER STREET	GRIMSBY	526416.91	409585.71	2011		47544	Urbis	Axia 16 LED 350mA	19 Watts	6.00 Metres	Steel	
Y	1	STREET LIGHTING	EARL STREET	GRIMSBY	526397	409310	2001		47700	1 Urbis LED	Teceo 32 LED 500mA	52 Watts	8.00 Metres	Galvanised Steel	
Y	2	STREET LIGHTING	EARL STREET	GRIMSBY	526415.24	409320.67	2014		47701	1 Urbis LED	Teceo 32 LED 500mA	52 Watts	8.00 Metres	Galvanised Steel	
Y	3	STREET LIGHTING	EARL STREET	GRIMSBY	526423.75	409361.93	2001		47702	1 Urbis LED	Teceo 32 LED 500mA	52 Watts	8.00 Metres	Galvanised Steel	
Y	4	STREET LIGHTING	EARL STREET	GRIMSBY	526437.35	409388.51	2001		47703	1 Urbis LED	Teceo 32 LED 500mA	52 Watts	8.00 Metres	Galvanised Steel	
Y	5	STREET LIGHTING	EARL STREET	GRIMSBY	526451.91	409416.85	2001		47704	1 Urbis LED	Teceo 32 LED 500mA	52 Watts	8.00 Metres	Stainless Steel	

Y	6	STREET LIGHTING	EARL STREET	GRIMSBY	526466.27	409447.1	2001		47705	1 Urbis LED	Teceo 32 LED 500mA	52 Watts	8.00 Metres	Galvanised Steel	
Y	7	STREET LIGHTING	EARL STREET	GRIMSBY	526478.58	409484.86	2024	30/08/2024	69972	Urbis	Teceo 32 LED 500mA	52 Watts	8.00 Metres	Galvanised Steel	
Y	8	STREET LIGHTING	EARL STREET	GRIMSBY	526498	409506	2001		47707	1 Urbis LED	Teceo 32 LED 500mA	52 Watts	8.00 Metres	Galvanised Steel	
Y	9	STREET LIGHTING	EARL STREET	GRIMSBY			2024	30/08/2024	70117	Urbis	Teceo 32 LED 500mA	52 Watts	8.00 Metres	Galvanised Steel	
Y	10	STREET LIGHTING	EARL STREET	GRIMSBY			2024	30/08/2024	70118	Urbis	Teceo 32 LED 500mA	52 Watts	8.00 Metres	Galvanised Steel	
Y	11	STREET LIGHTING	EARL STREET	GRIMSBY	526541.6	409589.71	2001		47710	1 Urbis LED	Teceo 32 LED 500mA	52 Watts	8.00 Metres	Galvanised Steel	
Y	12	STREET LIGHTING	EARL STREET	GRIMSBY	526556.15	409614.32	2001		47711	1 Urbis LED	Teceo 32 LED 500mA	52 Watts	8.00 Metres	Galvanised Steel	
Y	13	STREET LIGHTING	EARL STREET	GRIMSBY	526564	409645.31	2001		47712	1 Urbis LED	Teceo 32 LED 500mA	52 Watts	8.00 Metres	Galvanised Steel	
Y	1	STREET LIGHTING	BRAMBLE CLOSE	GRIMSBY	526130.68	409352.08	2004		44553	Urbis	Axia 16 LED 350mA	19 Watts	5.00 Metres	Stainless Steel	
Y	2	STREET LIGHTING	BRAMBLE CLOSE	GRIMSBY	526104.85	409366.46	2004		44554	Urbis	Axia 16 LED 350mA	19 Watts	5.00 Metres	Stainless Steel	
Y	1	STREET LIGHTING	HARRISON STREET	GRIMSBY	526181.13	409422.86	2004		50277	1 Urbis LED	Teceo 16 LED 500mA	28 Watts	6.00 Metres	Stainless Steel	
Y	2	STREET LIGHTING	HARRISON STREET	GRIMSBY	526174.81	409385.18	1993		50278	1 Urbis LED	Teceo 16 LED 500mA	28 Watts	6.00 Metres	Galvanised Steel	
Y	3	STREET LIGHTING	HARRISON STREET	GRIMSBY	526151.77	409363.09	1963		50279	1 Urbis LED	Teceo 16 LED 500mA	28 Watts	5.00 Metres	Steel	
Y	1	STREET LIGHTING	HAVEN AVENUE	GRIMSBY	526337.79	409755.24	2015	30/07/2015	50308	Urbis	Axia 16 LED 350mA	19 Watts	6.00 Metres	Galvanised Steel	
Y	2	STREET LIGHTING	HAVEN AVENUE	GRIMSBY	526309.77	409771.89	2015	30/07/2015	50309	Urbis	Axia 16 LED 350mA	19 Watts	6.00 Metres	Galvanised Steel	
Y	3	STREET LIGHTING	HAVEN AVENUE	GRIMSBY	526280.78	409787.39	1992		50310	Urbis	Axia 16 LED 350mA	19 Watts	6.00 Metres	Galvanised Steel	
Y	4	STREET LIGHTING	HAVEN AVENUE	GRIMSBY	526245.24	409806.24	1993		50311	Urbis	Axia 16 LED 350mA	19 Watts	6.00 Metres	Galvanised Steel	
Y	5	STREET LIGHTING	HAVEN AVENUE	GRIMSBY	526217.14	409815.67	1983		50312	Urbis	Axia 16 LED 350mA	19 Watts	6.00 Metres	Galvanised Steel	
Y	6	STREET LIGHTING	HAVEN AVENUE	GRIMSBY	526186.51	409829.48	1983		50313	Urbis	Axia 16 LED 350mA	19 Watts	6.00 Metres	Galvanised Steel	
Y	7	STREET LIGHTING	HAVEN AVENUE	GRIMSBY	526156.24	409858.61	2018	14/09/2018	67137	Urbis	Axia 16 LED 350mA	19 Watts	6.00 Metres	Galvanised Steel	
Y	8	STREET LIGHTING	HAVEN AVENUE	GRIMSBY	526130.41	409881.02	1983		50315	Urbis	Axia 16 LED 350mA	19 Watts	6.00 Metres	Galvanised Steel	
Y	9	STREET LIGHTING	HAVEN AVENUE	GRIMSBY	526106.36	409896.66	1983		50316	Urbis	Axia 16 LED 350mA	19 Watts	6.00 Metres	Galvanised Steel	
Y	10	STREET LIGHTING	HAVEN AVENUE	GRIMSBY	526070.54	409921.09	1983		50317	Urbis	Axia 16 LED 350mA	19 Watts	5.00 Metres	Galvanised Steel	
Y	11	STREET LIGHTING	HAVEN AVENUE	GRIMSBY	526040.41	409938.37	1946		50318	Urbis	Axia 16 LED 350mA	19 Watts	8.00 Metres	Steel	
Y	1	STREET LIGHTING	HAYCROFT STREET	GRIMSBY	526275.97	409777.45	1997		50412	1 Urbis LED	Axia 16 LED 500mA	28 Watts	6.00 Metres	Galvanised Steel	
Y	2	STREET LIGHTING	HAYCROFT STREET	GRIMSBY	526258.12	409749.35	1997		50413	1 Urbis LED	Axia 16 LED 500mA	28 Watts	6.00 Metres	Galvanised Steel	
Y	3	STREET LIGHTING	HAYCROFT STREET	GRIMSBY	526252.42	409719.04	2007		50414	1 Urbis LED	Axia 16 LED 500mA	28 Watts	6.00 Metres	Stainless Steel	
Y	4	STREET LIGHTING	HAYCROFT STREET	GRIMSBY	526219.26	409689.1	1993		50415	1 Urbis LED	Axia 16 LED 500mA	28 Watts	6.00 Metres	Galvanised Steel	
Y	5	STREET LIGHTING	HAYCROFT STREET	GRIMSBY	526213.83	409658.71	1997		50416	1 Urbis LED	Axia 16 LED 500mA	28 Watts	6.00 Metres	Galvanised Steel	
Y	6	STREET LIGHTING	HAYCROFT STREET	GRIMSBY	526190.79	409644.72	1993		50417	1 Urbis LED	Axia 16 LED 500mA	28 Watts	6.00 Metres	Galvanised Steel	
Y	7	STREET LIGHTING	HAYCROFT STREET	GRIMSBY	526186.74	409617.13	1993		50418	1 Urbis LED	Axia 16 LED 500mA	28 Watts	6.00 Metres	Galvanised Steel	
Y	8	STREET LIGHTING	HAYCROFT STREET	GRIMSBY	526163.83	409602.32	1993		50419	1 Urbis LED	Axia 16 LED 500mA	28 Watts	6.00 Metres	Galvanised Steel	
Y	9	STREET LIGHTING	HAYCROFT STREET	GRIMSBY	526150.79	409582.32	1993		50420	1 Urbis LED	Axia 16 LED 500mA	28 Watts	6.00 Metres	Galvanised Steel	
Y	10	STREET LIGHTING	HAYCROFT STREET	GRIMSBY	526137.75	409562.32	1993		50421	1 Urbis LED	Axia 16 LED 500mA	28 Watts	6.00 Metres	Galvanised Steel	
Y	11	STREET LIGHTING	HAYCROFT STREET	GRIMSBY	526134.11	409535.13	1993		50422	1 Urbis LED	Axia 16 LED 500mA	28 Watts	6.00 Metres	Galvanised Steel	
Y	12	STREET LIGHTING	HAYCROFT STREET	GRIMSBY	526111.84	409522.03	1993		50423	1 Urbis LED	Axia 16 LED 500mA	28 Watts	6.00 Metres	Galvanised Steel	
Y	13	STREET LIGHTING	HAYCROFT STREET	GRIMSBY	526099.18	409498.79	1993		50424	1 Urbis LED	Axia 16 LED 500mA	28 Watts	6.00 Metres	Galvanised Steel	
Y	14	STREET LIGHTING	HAYCROFT STREET	GRIMSBY	526099.18	409472.15	1993		50425	1 Urbis LED	Axia 16 LED 500mA	28 Watts	6.00 Metres	Galvanised Steel	
Y	15	STREET LIGHTING	HAYCROFT STREET	GRIMSBY	526085.89	409450.19	1993		50426	1 Urbis LED	Axia 16 LED 500mA	28 Watts	6.00 Metres	Galvanised Steel	
Y	16	STREET LIGHTING	HAYCROFT STREET	GRIMSBY	526074.8	409428.89	1993		50427	1 Urbis LED	Axia 16 LED 500mA	28 Watts	6.00 Metres	Galvanised Steel	
Y	17	STREET LIGHTING	HAYCROFT STREET	GRIMSBY	526052.65	409412.5	1993		50428	1 Urbis LED	Axia 16 LED 500mA	28 Watts	6.00 Metres	Galvanised Steel	
Y	18	STREET LIGHTING	HAYCROFT STREET	GRIMSBY	526050.88	409390.16	1993		50429	1 Urbis LED	Axia 16 LED 500mA	28 Watts	6.00 Metres	Galvanised Steel	
Y	19	STREET LIGHTING	HAYCROFT STREET	GRIMSBY	526029.03	409408.17	1993		50430	1 Urbis LED	Axia 16 LED 500mA	28 Watts	6.00 Metres	Galvanised Steel	
Y	20	STREET LIGHTING	HAYCROFT STREET	GRIMSBY	526008.78	409419.12	1993		50431	1 Urbis LED	Axia 16 LED 500mA	28 Watts	6.00 Metres	Galvanised Steel	
Y	21	STREET LIGHTING	HAYCROFT STREET	GRIMSBY	525985.62	409431.46	1993		50432	1 Urbis LED	Axia 16 LED 500mA	28 Watts	6.00 Metres	Galvanised Steel	
Y	1	STREET LIGHTING	HAYCROFT AVENUE	GRIMSBY	525959.28	409285.86	1997		50391	Urbis	Axia 16 LED 350mA	19 Watts	6.00 Metres	Galvanised Steel	
Y	2	STREET LIGHTING	HAYCROFT AVENUE	GRIMSBY	525981.94	409300.29	1997		50392	Urbis	Axia 16 LED 350mA	19 Watts	6.00 Metres	Galvanised Steel	
Y	3	STREET LIGHTING	HAYCROFT AVENUE	GRIMSBY	526011.82	409310.23	2007		50393	Urbis	Axia 16 LED 350mA	19 Watts	8.00 Metres	Galvanised Steel	
Y	5	STREET LIGHTING	HAYCROFT AVENUE	GRIMSBY	526032.25	409331.46	1997		50395	Urbis	Axia 16 LED 350mA	19 Watts	6.00 Metres	Galvanised Steel	
Y	6	STREET LIGHTING	HAYCROFT AVENUE	GRIMSBY	526050.42	409351.63	1997		50396	Urbis	Axia 16 LED 350mA	19 Watts	6.00 Metres	Galvanised Steel	
Y	7	STREET LIGHTING	HAYCROFT AVENUE	GRIMSBY	526072.95	409369.51	1997		50397	Urbis	Axia 16 LED 350mA	19 Watts	6.00 Metres	Galvanised Steel	
Y	8	STREET LIGHTING	HAYCROFT AVENUE	GRIMSBY	526092.89	409398.97	2021	05/10/2021	68727				8.00 Metres	Galvanised Steel	
Y	9	STREET LIGHTING	HAYCROFT AVENUE	GRIMSBY	526112.52	409418.26	1997		50399	Urbis	Axia 16 LED 350mA	19 Watts	6.00 Metres	Galvanised Steel	
Y	10	STREET LIGHTING	HAYCROFT AVENUE	GRIMSBY	526137.46	409437.56	1997		50400	Urbis	Axia 16 LED 350mA	19 Watts	6.00 Metres	Galvanised Steel	
Y	11	STREET LIGHTING	HAYCROFT AVENUE	GRIMSBY	526141.89	409461.42	1997		50401	Urbis	Axia 16 LED 350mA	19 Watts	6.00 Metres	Galvanised Steel	
Y	12	STREET LIGHTING	HAYCROFT AVENUE	GRIMSBY	526156.7	409482.49	1995		50402	Urbis	Axia 16 LED 350mA	19 Watts	6.00 Metres	Galvanised Steel	
Y	13	STREET LIGHTING	HAYCROFT AVENUE	GRIMSBY	526168	409512	1995		50403	Urbis	Axia 16 LED 350mA	19 Watts	6.00 Metres	Galvanised Steel	
Y	14	STREET LIGHTING	HAYCROFT AVENUE	GRIMSBY	526193.88	409525.81	1995		50404	Urbis	Axia 16 LED 350mA	19 Watts	5.00 Metres	Steel	
Y	15	STREET LIGHTING	HAYCROFT AVENUE	GRIMSBY	526197.17	409546.51	1995		50405	Urbis	Axia 16 LED 350mA	19 Watts	5.00 Metres	Steel	
Y	16	STREET LIGHTING	HAYCROFT AVENUE	GRIMSBY	526232.31	409566.25	2011		50406	Urbis	AXIA 16 LED 390mA	21 Watts	6.00 Metres	Steel	
Y	17	STREET LIGHTING	HAYCROFT AVENUE	GRIMSBY	526249.01	409588.81	2021	06/09/2021	68625	Urbis	AXIA 16 LED 390mA	21 Watts	6.00 Metres	Steel	
Y	18	STREET LIGHTING	HAYCROFT AVENUE	GRIMSBY	526267.75	409605.17	2021	06/09/2021	68626	Urbis	AXIA 16 LED 390mA	21 Watts	6.00 Metres	Steel	
Y	19	STREET LIGHTING	HAYCROFT AVENUE	GRIMSBY	526283.41	409620.84	2018	26/10/2018	67192	Urbis	Teceo 24 LED 500mA	40 Watts	6.00 Metres	Galvanised Steel	
Y	20	STREET LIGHTING	HAYCROFT AVENUE	GRIMSBY	526305.07	409633.22	2018	26/10/2018	67301	Urbis	Teceo 24 LED 500mA	40 Watts	6.00 Metres	Galvanised Steel	
Y	21	STREET LIGHTING	HAYCROFT AVENUE	GRIMSBY	526329.64	409676.75	2018	26/10/2018	67302	Urbis	Teceo 24 LED 500mA	40 Watts	6.00 Metres	Galvanised Steel	
Y	22	STREET LIGHTING	HAYCROFT AVENUE	GRIMSBY	526360.41	409713.11	2018	26/10/2018	67303	Urbis	Teceo 24 LED 500mA	40 Watts	6.00 Metres	Galvanised Steel	
Y	1	STREET LIGHTING	FOOTPATH BETWEEN HAYCROFT	GRIMSBY	526141.91	409504.44	2018	23/08/2018	67051	Urbis	AXIA 16 LED 390mA	21 Watts	6.00 Metres	Steel	
Y	1	STREET LIGHTING	FOOTPATH ADJACENT TO 75	GRIMSBY	526169.28	409560.32	1963		48680	Urbis	Axia 8 LED 350mA	10 Watts	5.00 Metres	Steel	
Y	1	STREET LIGHTING	HENRY STREET	GRIMSBY	526190.56	409817.01	1998		50535	Urbis	Axia 16 LED 350mA	19 Watts	6.00 Metres	Steel	
Y	2	STREET LIGHTING	HENRY STREET	GRIMSBY	526164.86	409796.44	1998		50536	1 Urbis LED	Axia 16 LED 500mA	28 Watts	6.00 Metres	Steel	
Y	3	STREET LIGHTING	HENRY STREET	GRIMSBY	526148.66	409770.93	1998		50537	1 Urbis LED	Axia 16 LED 500mA	28 Watts	6.00 Metres	Steel	
Y	4	STREET LIGHTING	HENRY STREET	GRIMSBY	526133.6	409747.45	1998		50538	1 Urbis LED	Axia 16 LED 500mA	28 Watts	6.00 Metres	Steel	
Y	5	STREET LIGHTING	HENRY STREET	GRIMSBY	526124.66	409713.85	1998		50539	1 Urbis LED	Axia 16 LED 500mA	28 Watts	6.00 Metres	Steel	
Y	6	STREET LIGHTING	HENRY STREET	GRIMSBY	526098.84	409693.28	1998		50540	1 Urbis LED	Axia 16 LED 500mA	28 Watts	6.00 Metres	Steel	
Y	7	STREET LIGHTING	HENRY STREET	GRIMSBY	526081.12	409665.88	1998		50541	1 Urbis LED	Axia 16 LED 500mA	28 Watts	6.00 Metres	Steel	
Y	8	STREET LIGHTING	HENRY STREET	GRIMSBY	526063.4	409637.9	1998		50542	1 Urbis LED	Axia 16 LED 500mA	28 Watts	6.00 Metres	Steel	
Y	9	STREET LIGHTING	HENRY STREET	GRIMSBY	526048.84	409615.31	1998		50543	Urbis	Axia 16 LED 350mA	19 Watts	6.00 Metres	Steel	
Y	1	STREET LIGHTING	HUME STREET	GRIMSBY	526278.72	409328.1	1999		51209	Urbis	Axia 16 LED 350mA	19 Watts	6.00 Metres	Galvanised Steel	
Y	2	STREET LIGHTING	HUME STREET	GRIMSBY	526256.59	409320.09	1999		51210	Urbis	Axia 16 LED 350mA	19 Watts	6.00 Metres	Galvanised Steel	
Y	3	STREET LIGHTING	HUME STREET	GRIMSBY	526243.43	409296.03	1999		51211	Urbis	Axia 16 LED 350mA	19 Watts	6.00 Metres	Galvanised Steel	
Y	4	STREET LIGHTING	HUME STREET	GRIMSBY	526247.86	409282.49	1999		51212	Urbis	Axia 16 LED 350mA	19 Watts	6.00 Metres	Galvanised Steel	
Y	5	STREET LIGHTING	HUME STREET	GRIMSBY	526275.7	409268.31	1999		51213	Urbis	Axia 16 LED 350mA	19 Watts	5.00 Metres	Galvanised Steel	
Y	6	STREET LIGHTING	HUME STREET	GRIMSBY	526297.73	409259.77	1999		51214	Urbis	Axia 16 LED 350mA	19 Watts	6.00 Metres	Galvanised Steel	
Y	7	STREET LIGHTING	HUME STREET	GRIMSBY	526277.86	409244.07	1999		51215	Urbis	Axia 16 LED 350mA	19 Watts	5.00 Metres	Galvanised Steel	
Y	1	STREET LIGHTING	MACAULAY STREET REAR ACCESS 23	GRIMSBY	526175.85	409356.29	1976		53054	Urbis	Axia 16 LED 350mA	19 Watts	6.00 Metres	Galvanised Steel	
Y	2	STREET LIGHTING	MACAULAY STREET REAR ACCESS 23	GRIMSBY	526206.86	409340.53	1976		53055	Urbis	Axia 16 LED 350mA	19 Watts	6.00 Metres	Galvanised Steel	
Y	3	STREET LIGHTING	MACAULAY STREET REAR ACCESS 23	GRIMSBY	526246.35	409320.85	1976		53056	Urbis	Axia 16 LED 350mA	19 Watts	6.00 Metres	Galvanised Steel	
Y	1	STREET LIGHTING	JAMES STREET	GRIMSBY	526150.78	409851.02	2009		51412	1 Urbis LED	Axia 16 LED 500mA	28 Watts	6.00 Metres	Steel	
Y	2	STREET LIGHTING	JAMES STREET	GRIMSBY	526123.15	409827.38	2009		51413	1 Urbis LED	Axia 16 LED 500mA	28 Watts	6.00 Metres	Steel	
Y	3	STREET LIGHTING	JAMES STREET	GRIMSBY	526113.17	409791.82	2009		51414	1 Urbis LED	Axia 16 LED 500mA	28 Watts	6.00 Metres	Steel	
Y	4	STREET LIGHTING	JAMES STREET	GRIMSBY	526087.34	409771.56		02/12/2024	51415	Urbis	Axia 16 LED 500mA	28 Watts	6.00 Metres	Galvanised Steel	
Y	5	STREET LIGHTING	JAMES STREET	GRIMSBY	526080.59	409740.94	2009		51416	1 Urbis LED	Axia 16 LED 500mA	28 Watts	6.00 Metres	Steel	
Y	6	STREET LIGHTING	JAMES STREET	GRIMSBY	526056.17	409722.88	2009		51417	1 Urbis LED	Axia 16 LED 500mA	28 Watts	6.00 Metres	Steel	
Y	7	STREET LIGHTING	JAMES STREET	GRIMSBY	526049.19	409691.79	2009		51418	1 Urbis LED	Axia 16 LED 500mA	28 Watts	6.00 Metres	Steel	
Y	8	STREET LIGHTING	JAMES STREET	GRIMSBY	526020.22	409666.4	2009		51419	1 Urbis LED	Axia 16 LED 500mA	28 Watts	6.00 Metres	Steel	
Y	9	STREET LIGHTING	JAMES STREET	GRIMSBY	526002.38	409639.07	2009		51420	1 Urbis LED	Axia 16 LED 500mA	28 Watts	6.00 Metres	Steel	
Y	1	STREET LIGHTING	JOSEPH STREET	GRIMSBY	526110.12	409883.01	2009		51455	Urbis	Axia 16 LED 350mA	19 Watts	6.00 Metres	Steel	
Y	2	STREET LIGHTING	JOSEPH STREET	GRIMSBY	526092.97	409856.13	2009		51456	Urbis	Axia 16 LED 350mA	19 Watts	6.00 Metres	Steel	
Y	3	STREET LIGHTING	JOSEPH STREET	GRIMSBY	526074.58	409827.42	2009		51457	Urbis	Axia 16 LED 350mA	19 Watts	6.00 Metres	Steel	
Y	4	STREET LIGHTING	JOSEPH STREET	GRIMSBY	526054.71	409796.78	2009		51458	Urbis	Axia 16 LED 350mA	19 Watts	6.00 Metres	Steel	
Y	1	STREET LIGHTING	LANCASTER AVENUE	GRIMSBY	525907.81	409579.19	2015	30/07/2015	52223	1 Urbis LED	Axia 16 LED 500mA	28 Watts	6.00 Metres	Galvanised Steel	
Y	2	STREET LIGHTING	LANCASTER AVENUE	GRIMSBY	525901.03	409549.18	2017	24/08/2017	66415	1 Urbis LED	Axia 16 LED 500mA	28 Watts	6.00 Metres	Galvanised Steel	
Y	3	STREET LIGHTING	LANCASTER AVENUE	GRIMSBY	525873.39	409516.02	2020	09/07/2020	67923	Urbis	Axia 24 LED 500mA	28 Watts	6.00 Metres	Galvanised Steel	
Y	4	STREET LIGHTING	LANCASTER AVENUE	GRIMSBY	525861.92	409471.49	2004		52226	1 Urbis LED	Axia 16 LED 500mA	28 Watts	6.00 Metres	Stainless Steel	
Y	1	STREET LIGHTING	LAWRENCE STREET	GRIMSBY	526043.54	409709.93	2009		52402	Urbis	Axia 16 LED 350mA	19 Watts	6.00 Metres	Steel	
Y	2	STREET LIGHTING	LAWRENCE STREET	GRIMSBY	526018.13	409713.79	2009		52403	Urbis	Axia 16 LED 350mA	19 Watts	6.00 Metres	Steel	
Y	3	STREET LIGHTING	LAWRENCE STREET	GRIMSBY	525996.47	409740.02	2009		52404	Urbis	Axia 16 LED 350mA	19 Watts	6.00 Metres	Steel	
Y	1	STREET LIGHTING	LAWSON AVENUE	GRIMSBY	525961.99	409535.83	2015	30/07/2015	52405	Urbis	Axia 16 LED 350mA	19 Watts	6.00 Metres	Galvanised Steel	
Y	2	STREET LIGHTING	LAWSON AVENUE	GRIMSBY	525934.14	409500.45	2015	30/07/2015	52406	Urbis	Axia 16 LED 350mA	19 Watts	6.00 Metres	Galvanised Steel	
Y	3	STREET LIGHTING	LAWSON AVENUE	GRIMSBY	525927.15	409466.4	2004		52407	Urbis	Axia 16 LED 350mA	19 Watts	6.00 Metres	Stainless Steel	

Y	4	STREET LIGHTING	LAWSON AVENUE	GRIMSBY	525903.32	409444.92	2004		52408	Urbis	Axia 16 LED 350mA	19 Watts	6.00 Metres	Stainless Steel	
Y	1	STREET LIGHTING	LIME STREET	GRIMSBY	526307.93	409601.24	1993		52546	1 Urbis LED	Axia 16 LED 500mA	28 Watts	6.00 Metres	Galvanised Steel	
Y	2	STREET LIGHTING	LIME STREET	GRIMSBY	526331.73	409612.7	1993		52547	1 Urbis LED	Axia 16 LED 500mA	28 Watts	6.00 Metres	Galvanised Steel	
Y	3	STREET LIGHTING	LIME STREET	GRIMSBY	526341.6	409635.6	1993		52548	1 Urbis LED	Axia 16 LED 500mA	28 Watts	6.00 Metres	Galvanised Steel	
Y	4	STREET LIGHTING	LIME STREET	GRIMSBY	526364.51	409646.36	1993		52549	1 Urbis LED	Axia 16 LED 500mA	28 Watts	6.00 Metres	Galvanised Steel	
Y	5	STREET LIGHTING	LIME STREET	GRIMSBY	526376.91	409671.87	1993		52550	1 Urbis LED	Axia 16 LED 500mA	28 Watts	6.00 Metres	Galvanised Steel	
Y	6	STREET LIGHTING	LIME STREET	GRIMSBY	526402.1	409684.72	1993		52551	1 Urbis LED	Axia 16 LED 500mA	28 Watts	6.00 Metres	Galvanised Steel	
Y	1	STREET LIGHTING	LISTER STREET	GRIMSBY	526121.86	409549.27	1993		52623	Urbis	Axia 16 LED 350mA	19 Watts	6.00 Metres	Galvanised Steel	
Y	2	STREET LIGHTING	LISTER STREET	GRIMSBY	526096.93	409565.41	1993		52624	Urbis	Axia 16 LED 350mA	19 Watts	6.00 Metres	Galvanised Steel	
Y	3	STREET LIGHTING	LISTER STREET	GRIMSBY	526073.25	409578.76	1993		52625	Urbis	Axia 16 LED 350mA	19 Watts	6.00 Metres	Galvanised Steel	
Y	4	STREET LIGHTING	LISTER STREET	GRIMSBY	526056.8	409599.2	2013		52626	Urbis	Axia 16 LED 350mA	19 Watts	6.00 Metres	Galvanised Steel	
Y	5	STREET LIGHTING	LISTER STREET	GRIMSBY	526029.33	409601.92	1993		52627	Urbis	Axia 16 LED 350mA	19 Watts	6.00 Metres	Galvanised Steel	
Y	6	STREET LIGHTING	LISTER STREET	GRIMSBY	526012.37	409622.62	1993		52628	Urbis	Axia 16 LED 350mA	19 Watts	6.00 Metres	Galvanised Steel	
Y	7	STREET LIGHTING	LISTER STREET	GRIMSBY	525987.18	409636.48	1993		52629	Urbis	Axia 16 LED 350mA	19 Watts	6.00 Metres	Galvanised Steel	
Y	8	STREET LIGHTING	LISTER STREET	GRIMSBY	525966.93	409647.68	1993		52630	Urbis	Axia 16 LED 350mA	19 Watts	6.00 Metres	Galvanised Steel	
Y	9	STREET LIGHTING	LISTER STREET	GRIMSBY	525944.14	409659.45	1993		52631	Urbis	Axia 16 LED 350mA	19 Watts	6.00 Metres	Galvanised Steel	
Y	10	STREET LIGHTING	LISTER STREET	GRIMSBY	525923	409657.99	1993		52632	Urbis	Axia 16 LED 350mA	19 Watts	6.00 Metres	Galvanised Steel	
Y	11	STREET LIGHTING	LISTER STREET	GRIMSBY	525899.78	409670.45	1993		52633	Urbis	Axia 16 LED 350mA	19 Watts	6.00 Metres	Galvanised Steel	
Y	12	STREET LIGHTING	LISTER STREET	GRIMSBY	525881.51	409692.88	1993		52634	Urbis	Axia 16 LED 350mA	19 Watts	6.00 Metres	Galvanised Steel	
Y	13	STREET LIGHTING	LISTER STREET	GRIMSBY	525854.29	409695.22	1993		52635	Urbis	Axia 16 LED 350mA	19 Watts	6.00 Metres	Galvanised Steel	
Y	14	STREET LIGHTING	LISTER STREET	GRIMSBY	525830.11	409709.65	1993		52636	Urbis	Axia 16 LED 350mA	19 Watts	6.00 Metres	Galvanised Steel	
Y	1	STREET LIGHTING	LORD STREET	GRIMSBY	526576.44	409408.3	1994		52770	1 Urbis LED	Teceo 24 LED 500mA	40 Watts	8.00 Metres	Galvanised Steel	
Y	2	STREET LIGHTING	LORD STREET	GRIMSBY	526552.39	409414.25	1994		52771	1 Urbis LED	Teceo 24 LED 500mA	40 Watts	8.00 Metres	Galvanised Steel	
Y	3	STREET LIGHTING	LORD STREET	GRIMSBY	526512.48	409411.02	1994		52772	1 Urbis LED	Teceo 24 LED 500mA	40 Watts	8.00 Metres	Galvanised Steel	
Y	4	STREET LIGHTING	LORD STREET	GRIMSBY	526480.08	409431.37	1994		52773	1 Urbis LED	Teceo 24 LED 500mA	40 Watts	8.00 Metres	Galvanised Steel	
Y	5	STREET LIGHTING	LORD STREET	GRIMSBY	526450.99	409432.66	1994		52774	1 Urbis LED	Teceo 24 LED 500mA	40 Watts	8.00 Metres	Galvanised Steel	
Y	6	STREET LIGHTING	LORD STREET	GRIMSBY	526434.79	409464.78	1994		52775	1 Urbis LED	Teceo 24 LED 500mA	40 Watts	8.00 Metres	Galvanised Steel	
Y	7	STREET LIGHTING	LORD STREET	GRIMSBY	526411.48	409471.5	1994		52776	1 Urbis LED	Teceo 24 LED 500mA	40 Watts	8.00 Metres	Galvanised Steel	
Y	8	STREET LIGHTING	LORD STREET	GRIMSBY	526400.09	409498.91	1994		52777	1 Urbis LED	Teceo 24 LED 500mA	40 Watts	8.00 Metres	Galvanised Steel	
Y	9	STREET LIGHTING	LORD STREET	GRIMSBY	526377.56	409505.05	1994		52778	1 Urbis LED	Teceo 24 LED 500mA	40 Watts	8.00 Metres	Galvanised Steel	
Y	10	STREET LIGHTING	LORD STREET	GRIMSBY	526364.02	409534.16	1994		52779	1 Urbis LED	Teceo 24 LED 500mA	40 Watts	8.00 Metres	Galvanised Steel	
Y	11	STREET LIGHTING	LORD STREET	GRIMSBY	526333.89	409548.15	1994		52780	1 Urbis LED	Teceo 24 LED 500mA	40 Watts	8.00 Metres	Galvanised Steel	
Y	12	STREET LIGHTING	LORD STREET	GRIMSBY	526315.92	409582.19	1994		52781	1 Urbis LED	Teceo 24 LED 500mA	40 Watts	8.00 Metres	Galvanised Steel	
Y	13	STREET LIGHTING	LORD STREET	GRIMSBY	526287.69	409594.16	1994		52782	1 Urbis LED	Teceo 24 LED 500mA	40 Watts	8.00 Metres	Galvanised Steel	
Y	14	STREET LIGHTING	LORD STREET	GRIMSBY	526269.21	409628.77	1994		52783	1 Urbis LED	Teceo 24 LED 500mA	40 Watts	8.00 Metres	Galvanised Steel	
Y	15	STREET LIGHTING	LORD STREET	GRIMSBY	526250.35	409630.74	1994		52784	1 Urbis LED	Teceo 24 LED 500mA	40 Watts	8.00 Metres	Galvanised Steel	
Y	16	STREET LIGHTING	LORD STREET	GRIMSBY	526247.69	409650.54	1994		52785	1 Urbis LED	Teceo 24 LED 500mA	40 Watts	8.00 Metres	Galvanised Steel	
Y	17	STREET LIGHTING	LORD STREET	GRIMSBY	526229.84	409667.63	1994		52786	1 Urbis LED	Teceo 24 LED 500mA	40 Watts	8.00 Metres	Galvanised Steel	
Y	18	STREET LIGHTING	LORD STREET	GRIMSBY	526201.61	409673.9	1994		52787	1 Urbis LED	Teceo 24 LED 500mA	40 Watts	8.00 Metres	Galvanised Steel	
Y	19	STREET LIGHTING	LORD STREET	GRIMSBY	526187.82	409696.62	1963		52788	1 Urbis LED	Teceo 24 LED 500mA	40 Watts	8.00 Metres	Steel	
Y	20	STREET LIGHTING	LORD STREET	GRIMSBY	526158.07	409701.87	1994		52789	1 Urbis LED	Teceo 24 LED 500mA	40 Watts	8.00 Metres	Galvanised Steel	
Y	21	STREET LIGHTING	LORD STREET	GRIMSBY	526140.1	409727.38	1994		52790	1 Urbis LED	Teceo 24 LED 500mA	40 Watts	8.00 Metres	Galvanised Steel	
Y	22	STREET LIGHTING	LORD STREET	GRIMSBY	526114.4	409729.97	1994		52791	1 Urbis LED	Teceo 24 LED 500mA	40 Watts	8.00 Metres	Galvanised Steel	
Y	23	STREET LIGHTING	LORD STREET	GRIMSBY	526095.92	409755.85	1994		52792	1 Urbis LED	Teceo 24 LED 500mA	40 Watts	8.00 Metres	Galvanised Steel	
Y	24	STREET LIGHTING	LORD STREET	GRIMSBY	526067.75	409762.38	2021	29/01/2021	68234	Urbis	Teceo 24 LED 500mA	40 Watts	8.00 Metres	Galvanised Steel	
Y	25	STREET LIGHTING	LORD STREET	GRIMSBY	526038.54	409780.14	2021	12/01/2021	68217	Urbis	Teceo 24 LED 500mA	40 Watts	8.00 Metres	Galvanised Steel	
Y	26	STREET LIGHTING	LORD STREET	GRIMSBY	526024.4	409802.31	1994		52795	1 Urbis LED	Teceo 24 LED 500mA	40 Watts	8.00 Metres	Galvanised Steel	
Y	27	STREET LIGHTING	LORD STREET	GRIMSBY	526005.04	409814.46	1994		52796	1 Urbis LED	Teceo 24 LED 500mA	40 Watts	8.00 Metres	Galvanised Steel	
Y	28	STREET LIGHTING	LORD STREET	GRIMSBY	525977.47	409829.44	2019	09/10/2019	67672	Urbis	Teceo 24 LED 500mA	40 Watts	6.00 Metres	Galvanised Steel	
Y	29	STREET LIGHTING	LORD STREET	GRIMSBY	525954.64	409837.23	1993		52798	1 Urbis LED	Teceo 24 LED 500mA	40 Watts	6.00 Metres	Galvanised Steel	
Y	30	STREET LIGHTING	LORD STREET	GRIMSBY	525931.22	409847.48	1993		52799	1 Urbis LED	Teceo 24 LED 500mA	40 Watts	6.00 Metres	Galvanised Steel	
Y	1	STREET LIGHTING	MACAULAY STREET	GRIMSBY	526339.48	409274.12	1988		53033	Urbis	Axia 16 LED 350mA	19 Watts	6.00 Metres	Galvanised Steel	
Y	2	STREET LIGHTING	MACAULAY STREET	GRIMSBY	526321	409307.85	1988		53034	Urbis	Axia 16 LED 350mA	19 Watts	6.00 Metres	Galvanised Steel	
Y	3	STREET LIGHTING	MACAULAY STREET	GRIMSBY	526296.95	409320.57	1988		53035	Urbis	Axia 16 LED 350mA	19 Watts	6.00 Metres	Galvanised Steel	
Y	4	STREET LIGHTING	MACAULAY STREET	GRIMSBY	526278.09	409340.51	1988		53036	Urbis	Axia 16 LED 350mA	19 Watts	6.00 Metres	Galvanised Steel	
Y	5	STREET LIGHTING	MACAULAY STREET	GRIMSBY	526251.51	409366.78	1988		53037	Urbis	Axia 16 LED 350mA	19 Watts	6.00 Metres	Galvanised Steel	
Y	6	STREET LIGHTING	MACAULAY STREET	GRIMSBY	526234.55	409401.88	1988		53038	Urbis	Axia 16 LED 350mA	19 Watts	6.00 Metres	Galvanised Steel	
Y	7	STREET LIGHTING	MACAULAY STREET	GRIMSBY	526214.8	409419.79	1988		53039	Urbis	Axia 16 LED 350mA	19 Watts	5.00 Metres	Galvanised Steel	
Y	8	STREET LIGHTING	MACAULAY STREET	GRIMSBY	526192.52	409440.61	1988		53040	Urbis	Axia 16 LED 350mA	19 Watts	6.00 Metres	Galvanised Steel	
Y	9	STREET LIGHTING	MACAULAY STREET	GRIMSBY	526169.61	409462.19	1988		53041	Urbis	Axia 16 LED 350mA	19 Watts	6.00 Metres	Galvanised Steel	
Y	10	STREET LIGHTING	MACAULAY STREET	GRIMSBY	526140.5	409471.37	1988		53042	Urbis	Axia 16 LED 350mA	19 Watts	6.00 Metres	Galvanised Steel	
Y	11	STREET LIGHTING	MACAULAY STREET	GRIMSBY	526119.24	409492.32	1988		53043	Urbis	Axia 16 LED 350mA	19 Watts	6.00 Metres	Galvanised Steel	
Y	12	STREET LIGHTING	MACAULAY STREET	GRIMSBY	526009	409539	2009		53044	Urbis	Axia 16 LED 350mA	19 Watts	6.00 Metres	Steel	
Y	13	STREET LIGHTING	MACAULAY STREET	GRIMSBY	525979	409555	2009		53045	Urbis	Axia 16 LED 350mA	19 Watts	6.00 Metres	Steel	
Y	14	STREET LIGHTING	MACAULAY STREET	GRIMSBY	525943	409574	2009		53046	Urbis	Axia 16 LED 350mA	19 Watts	6.00 Metres	Steel	
Y	15	STREET LIGHTING	MACAULAY STREET	GRIMSBY	525911	409590	2009		53047	Urbis	Axia 16 LED 350mA	19 Watts	6.00 Metres	Steel	
Y	16	STREET LIGHTING	MACAULAY STREET	GRIMSBY	525889	409602	2009		53048	Urbis	Axia 16 LED 350mA	19 Watts	6.00 Metres	Steel	
Y	17	STREET LIGHTING	MACAULAY STREET	GRIMSBY	525847.91	409622.1	1998		53049	Urbis	Axia 16 LED 350mA	19 Watts	6.00 Metres	Galvanised Steel	
Y	18	STREET LIGHTING	MACAULAY STREET	GRIMSBY	525831.58	409642.92	1998		53050	Urbis	Axia 16 LED 350mA	19 Watts	6.00 Metres	Galvanised Steel	
Y	19	STREET LIGHTING	MACAULAY STREET	GRIMSBY	525799.81	409646.65	2005		53051	Urbis	Axia 16 LED 350mA	19 Watts	6.00 Metres	Stainless Steel	
Y	20	STREET LIGHTING	MACAULAY STREET	GRIMSBY	525776.77	409658.4	1998		53052	Urbis	Axia 16 LED 350mA	19 Watts	6.00 Metres	Galvanised Steel	
Y	21	STREET LIGHTING	MACAULAY STREET	GRIMSBY	525749.79	409672.5	1998		53053	Urbis	Axia 16 LED 350mA	19 Watts	6.00 Metres	Galvanised Steel	
Y	1	STREET LIGHTING	NEWBY ROAD	GRIMSBY	526012.07	409478.93	2009		54092	Urbis	Axia 16 LED 350mA	19 Watts	6.00 Metres	Galvanised Steel	
Y	2	STREET LIGHTING	NEWBY ROAD	GRIMSBY	526032	409456	2009		54093	Urbis	Axia 16 LED 350mA	19 Watts	6.00 Metres	Galvanised Steel	
Y	3	STREET LIGHTING	NEWBY ROAD	GRIMSBY	526063	409452	2009		54094	Urbis	Axia 16 LED 350mA	19 Watts	6.00 Metres	Galvanised Steel	
Y	1	STREET LIGHTING	NEW CARTERGATE	GRIMSBY	526618.71	409460.1	2012		54018	Urbis	Axia 16 LED 350mA	19 Watts	6.00 Metres	Steel	
Y	2	STREET LIGHTING	NEW CARTERGATE	GRIMSBY	526601.76	409441.41	1989		54019	1 Urbis LED	Teceo 40 LED 500mA	64 Watts	8.00 Metres	Galvanised Steel	
Y	3	STREET LIGHTING	NEW CARTERGATE	GRIMSBY	526602.85	409411.14	1989		54020	1 Urbis LED	Teceo 40 LED 500mA	64 Watts	8.00 Metres	Galvanised Steel	
Y	1	STREET LIGHTING	RICHARD STREET	GRIMSBY	526332.38	409747.89	2009		56088	Urbis	Axia 16 LED 350mA	19 Watts	6.00 Metres	Steel	
Y	2	STREET LIGHTING	RICHARD STREET	GRIMSBY	526314.35	409719.91	2009		56089	Urbis	Axia 16 LED 350mA	19 Watts	6.00 Metres	Steel	
Y	3	STREET LIGHTING	RICHARD STREET	GRIMSBY	526291.27	409703.23	2009		56090	Urbis	Axia 16 LED 350mA	19 Watts	6.00 Metres	Steel	
Y	4	STREET LIGHTING	RICHARD STREET	GRIMSBY	526283.72	409671.96	2009		56091	Urbis	Axia 16 LED 350mA	19 Watts	6.00 Metres	Steel	
Y	5	STREET LIGHTING	RICHARD STREET	GRIMSBY	526256.73	409649.57	2009		56092	Urbis	Axia 16 LED 350mA	19 Watts	6.00 Metres	Steel	
Y	1	STREET LIGHTING	RIPON STREET	GRIMSBY	526251.19	409449.74	1990		56114	1 Urbis LED	Teceo 24 LED 500mA	40 Watts	6.00 Metres	Galvanised Steel	
Y	2	STREET LIGHTING	RIPON STREET	GRIMSBY	526277.51	409475.31	1990		56115	1 Urbis LED	Teceo 24 LED 500mA	40 Watts	6.00 Metres	Galvanised Steel	
Y	3	STREET LIGHTING	RIPON STREET	GRIMSBY	526312.07	409495.24	1990		56116	1 Urbis LED	Teceo 24 LED 500mA	40 Watts	6.00 Metres	Galvanised Steel	
Y	4	STREET LIGHTING	RIPON STREET	GRIMSBY	526341.31	409525.31	1990		56117	1 Urbis LED	Teceo 24 LED 500mA	40 Watts	6.00 Metres	Galvanised Steel	
Y	5	STREET LIGHTING	RIPON STREET	GRIMSBY	526353.62	409554.84	1990		56118	1 Urbis LED	Teceo 24 LED 500mA	40 Watts	6.00 Metres	Galvanised Steel	
Y	6	STREET LIGHTING	RIPON STREET	GRIMSBY	526375.01	409576.68	1990		56119	1 Urbis LED	Teceo 24 LED 500mA	40 Watts	6.00 Metres	Galvanised Steel	
Y	7	STREET LIGHTING	RIPON STREET	GRIMSBY	526402.22	409586.36	1990		56120	1 Urbis LED	Teceo 24 LED 500mA	40 Watts	6.00 Metres	Galvanised Steel	
Y	8	STREET LIGHTING	RIPON STREET	GRIMSBY	526416.91	409619.21	1990		56121	1 Urbis LED	Teceo 24 LED 500mA	40 Watts	6.00 Metres	Galvanised Steel	
Y	9	STREET LIGHTING	RIPON STREET	GRIMSBY	526399.19	409624.4	1990		56122	1 Urbis LED	Teceo 24 LED 500mA	40 Watts	5.00 Metres	Galvanised Steel	
Y	1	STREET LIGHTING	SALAMANDER CLOSE	GRIMSBY	525837.21	409729.21	2005		56476	Urbis	Axia 16 LED 350mA	19 Watts	6.00 Metres	Stainless Steel	
Y	2	STREET LIGHTING	SALAMANDER CLOSE	GRIMSBY	525840.41	409753.41	2005		56477	Urbis	Axia 16 LED 350mA	19 Watts	6.00 Metres	Stainless Steel	
Y	3	STREET LIGHTING	SALAMANDER CLOSE	GRIMSBY	525854.77	409768.38	2018	11/05/2018	56478	Urbis	Axia 16 LED 350mA	19 Watts	6.00 Metres	Galvanised Steel	
Y	4	STREET LIGHTING	SALAMANDER CLOSE	GRIMSBY	525878.76	409749.71	2004		56479	Urbis	Axia 16 LED 350mA	19 Watts	6.00 Metres	Stainless Steel	
Y	5	STREET LIGHTING	SALAMANDER CLOSE	GRIMSBY	525895.02	409742.49	2017	24/08/2017	56480	Urbis	Axia 16 LED 350mA	19 Watts	6.00 Metres	Galvanised Steel	
Y	6	STREET LIGHTING	SALAMANDER CLOSE	GRIMSBY	525884.14	409774.76	2019	03/10/2019	67620	Urbis	Axia 16 LED 350mA	19 Watts	6.00 Metres	Galvanised Steel	
Y	7	STREET LIGHTING	SALAMANDER CLOSE	GRIMSBY	525908.26	409791.16	2019	03/10/2019	67794	Urbis	Axia 16 LED 350mA	19 Watts	6.00 Metres	Galvanised Steel	
Y	8	STREET LIGHTING	SALAMANDER CLOSE	GRIMSBY	525913.27	409807.58	2019	03/10/2019	67795	Urbis	Axia 16 LED 350mA	19 Watts	6.00 Metres	Galvanised Steel	
Y	9	STREET LIGHTING	SALAMANDER CLOSE	GRIMSBY	525901.69	409824.62	2019	03/10/2019	67796	Urbis	Axia 16 LED 350mA	19 Watts	6.00 Metres	Galvanised Steel	
Y	10	STREET LIGHTING	SALAMANDER CLOSE	GRIMSBY	525911.23	409850.61	2019	03/10/2019	67797	Urbis	Axia 16 LED 350mA	19 Watts	6.00 Metres	Galvanised Steel	
Y	11	STREET LIGHTING	SALAMANDER CLOSE	GRIMSBY	525927.02	409877.89	2019	03/10/2019	67798	Urbis	Axia 16 LED 350mA	19 Watts	6.00 Metres	Galvanised Steel	
Y	12	STREET LIGHTING	SALAMANDER CLOSE	GRIMSBY	525934.19	409896.04	2012		56487	Urbis	Axia 16 LED 350mA	19 Watts	6.00 Metres	Steel	
Y	13	STREET LIGHTING	SALAMANDER CLOSE	GRIMSBY	525972.38	409903.75	2019	03/10/2019	67799	Urbis	Axia 16 LED 350mA	19 Watts	6.00 Metres	Galvanised Steel	
Y	14	STREET LIGHTING	SALAMANDER CLOSE	GRIMSBY	525961.73	409931.73	2017	24/02/2017	56489	Urbis	Axia 16 LED 350mA	19 Watts	6.00 Metres	Galvanised Steel	
Y	15	STREET LIGHTING	SALAMANDER CLOSE	GRIMSBY	525980.62	409946.49	2019	03/10/2019	67800	Urbis	Axia 16 LED 350mA	19 Watts	6.00 Metres	Galvanised Steel	
Y	1	STREET LIGHTING	SAUNDERS STREET	GRIMSBY	526190.43	409603.32	2004		56611	Urbis	Axia 16 LED 350mA	19 Watts	6.00 Metres	Stainless Steel	
Y	2	STREET LIGHTING	SAUNDERS STREET	GRIMSBY	526207.81	409578.32	2004		56612	Urbis	Axia 16 LED 350mA	19 Watts	6.00 Metres	Stainless Steel	
Y	1	STREET LIGHTING	VEAL STREET	GRIMSBY	526302.65	409394.4	2011		59536	Urbis	Axia 8 LED 350mA	10 Watts	6.00 Metres	Steel	

Y	2	STREET LIGHTING	VEAL STREET	GRIMSBY	526320.68	409414.85	2011		59537	Urbis	Axia 8 LED 350mA	10 Watts	6.00 Metres	Steel	
Y	3	STREET LIGHTING	VEAL STREET	GRIMSBY	526337.63	409433.22	2008		59538	Urbis	Axia 8 LED 350mA	10 Watts	6.00 Metres	Steel	
Y	4	STREET LIGHTING	VEAL STREET	GRIMSBY	526344.66	409453.54	2008		59539	Urbis	Axia 8 LED 350mA	10 Watts	6.00 Metres	Steel	
Y	5	STREET LIGHTING	VEAL STREET	GRIMSBY	526360.87	409468.45	2011		59540	Urbis	Axia 8 LED 350mA	10 Watts	6.00 Metres	Steel	
Y	6	STREET LIGHTING	VEAL STREET	GRIMSBY	526379.72	409486.12	2011		59541	Urbis	Axia 8 LED 350mA	10 Watts	6.00 Metres	Steel	
Y	1	STREET LIGHTING	BOULEVARD WAY	GRIMSBY	525704.77	409452.42			67851	Urbis	Axia 8 LED 350mA	10 Watts	6.00 Metres	Steel	
Y	2	STREET LIGHTING	BOULEVARD WAY	GRIMSBY	525725.91	409473.78			68051	Urbis	Axia 8 LED 350mA	10 Watts	6.00 Metres	Steel	
Y	1	STREET LIGHTING	WHARTON STREET	GRIMSBY	526051.57	409575.96	1999		60620	Urbis	Axia 16 LED 350mA	19 Watts	6.00 Metres	Galvanised Steel	
Y	2	STREET LIGHTING	WHARTON STREET	GRIMSBY	526028.79	409555.26	1999		60621	Urbis	Axia 16 LED 350mA	19 Watts	6.00 Metres	Galvanised Steel	
Y	3	STREET LIGHTING	WHARTON STREET	GRIMSBY	526023.85	409523.11	1999		60622	Urbis	Axia 16 LED 350mA	19 Watts	6.00 Metres	Galvanised Steel	
Y	4	STREET LIGHTING	WHARTON STREET	GRIMSBY	526011.44	409499.38	1999		60623	Urbis	Axia 16 LED 350mA	19 Watts	6.00 Metres	Galvanised Steel	
Y	5	STREET LIGHTING	WHARTON STREET	GRIMSBY	525993.09	409486.91	1999		60624	Urbis	Axia 16 LED 350mA	19 Watts	6.00 Metres	Galvanised Steel	
Y	6	STREET LIGHTING	WHARTON STREET	GRIMSBY	525989.29	409456.91	1999		60625	Urbis	Axia 16 LED 350mA	19 Watts	6.00 Metres	Galvanised Steel	
Y	7	STREET LIGHTING	WHARTON STREET	GRIMSBY	525969.29	409441.59	1999		60626	Urbis	Axia 16 LED 350mA	19 Watts	6.00 Metres	Galvanised Steel	
Y	8	STREET LIGHTING	WHARTON STREET	GRIMSBY	525966.25	409412.79	1999		60627	Urbis	Axia 16 LED 350mA	19 Watts	6.00 Metres	Galvanised Steel	
Y	1	STREET LIGHTING	BEMROSE WAY	GRIMSBY	526291.38	409571.61	1969		44030	Urbis	Axia 16 LED 350mA	19 Watts	5.00 Metres	Steel	
Y	2	STREET LIGHTING	BEMROSE WAY	GRIMSBY	526268.47	409559.14	1969		44031	Urbis	Axia 16 LED 350mA	19 Watts	5.00 Metres	Steel	
Y	3	STREET LIGHTING	BEMROSE WAY	GRIMSBY	526265.05	409540.03	1969		44032	Urbis	AXIA 16 LED 390mA	21 Watts	5.00 Metres	Steel	
Y	4	STREET LIGHTING	BEMROSE WAY	GRIMSBY				02/06/2025	70211	Urbis	Axia 16 LED 500mA	28 Watts	6.00 Metres	Galvanised Steel	
Y	5	STREET LIGHTING	BEMROSE WAY	GRIMSBY	526246.95	409529.4	1969		44034	Urbis	AXIA 16 LED 390mA	21 Watts	5.00 Metres	Steel	
Y	6	STREET LIGHTING	BEMROSE WAY	GRIMSBY	526234.08	409549.04	2021	05/10/2021	68699				8.00 Metres	Galvanised Steel	
Y	7	STREET LIGHTING	BEMROSE WAY	GRIMSBY	526248.35	409560.48	1969		44036	Urbis	Axia 16 LED 350mA	19 Watts	5.00 Metres	Steel	
Y	8	STREET LIGHTING	BEMROSE WAY	GRIMSBY	526260.62	409569.9	1969		44037	Urbis	Axia 16 LED 350mA	19 Watts	5.00 Metres	Steel	
Y	9	STREET LIGHTING	BEMROSE WAY	GRIMSBY	526272.14	409584.66	1969		44038	Urbis	Axia 16 LED 350mA	19 Watts	5.00 Metres	Steel	
Y	1	STREET LIGHTING	CARTERGATE	GRIMSBY	526569.88	409361.62	1989		45384	1 Urbis LED	Teceo 48 LED 500mA	79 Watts	12.00 Metres	Galvanised Steel	
Y	2	STREET LIGHTING	CARTERGATE	GRIMSBY	526557.38	409333.23	1989		45385	1 Urbis LED	Teceo 48 LED 500mA	79 Watts	12.00 Metres	Galvanised Steel	
Y	3	STREET LIGHTING	CARTERGATE	GRIMSBY	526576.69	409325.23	1989		45386	1 Urbis LED	Teceo 48 LED 500mA	79 Watts	10.00 Metres	Galvanised Steel	
Y	4	STREET LIGHTING	CARTERGATE	GRIMSBY	526553.96	409297.53	2015	08/12/2015	61474	1 Urbis LED	Teceo 48 LED 500mA	79 Watts	10.00 Metres	Galvanised Steel	
Y	4	STREET LIGHTING	CARTERGATE	GRIMSBY	526553.96	409297.53	2015	08/12/2015	62006	1 Urbis LED	Teceo 48 LED 500mA	79 Watts	10.00 Metres	Galvanised Steel	
Y	5	STREET LIGHTING	CARTERGATE	GRIMSBY	526541.3	409269.56	2015	08/12/2015	61475	1 Urbis LED	Teceo 48 LED 500mA	79 Watts	10.00 Metres	Galvanised Steel	
Y	5	STREET LIGHTING	CARTERGATE	GRIMSBY	526541.3	409269.56	2015	08/12/2015	62007	1 Urbis LED	Teceo 48 LED 500mA	79 Watts	10.00 Metres	Galvanised Steel	
Y	6	STREET LIGHTING	CARTERGATE	GRIMSBY	526521.3	409252.85	1989		45387	1 Urbis LED	Teceo 24 LED 500mA	40 Watts	6.00 Metres	Galvanised Steel	
Y	7	STREET LIGHTING	CARTERGATE	GRIMSBY	526512.19	409224.36	2017		45388	1 Urbis LED	Teceo 24 LED 500mA	40 Watts	6.00 Metres	Galvanised Steel	
Y	8	STREET LIGHTING	CARTERGATE	GRIMSBY	526509.91	409182.27	1989		45389	1 Urbis LED	Teceo 24 LED 500mA	40 Watts	6.00 Metres	Steel	
Y	9	STREET LIGHTING	CARTERGATE	GRIMSBY	526495.23	409166.39	1989		45390	1 Urbis LED	Teceo 24 LED 500mA	40 Watts	6.00 Metres	Steel	
Y	10	STREET LIGHTING	CARTERGATE	GRIMSBY	526497.02	409137.69	1989		45391	1 Urbis LED	Teceo 24 LED 500mA	40 Watts	6.00 Metres	Galvanised Steel	
Y	11	STREET LIGHTING	CARTERGATE	GRIMSBY	526476.89	409104.25	1989		45392	1 Urbis LED	Teceo 24 LED 500mA	40 Watts	6.00 Metres	Galvanised Steel	
Y	12	STREET LIGHTING	CARTERGATE	GRIMSBY	526469.68	409077.26	2019	03/10/2019	67522	Urbis	Teceo 24 LED 500mA	40 Watts	6.00 Metres	Galvanised Steel	
Y	13	STREET LIGHTING	CARTERGATE	GRIMSBY	526472.21	409048.36	1989		45394	1 Urbis LED	Teceo 24 LED 500mA	40 Watts	6.00 Metres	Galvanised Steel	
Y	14	STREET LIGHTING	CARTERGATE	GRIMSBY	526498.41	409005.96	1988		45395	1 Urbis LED	Teceo 48 LED 500mA	79 Watts	12.00 Metres	Galvanised Steel	
Y	1	STREET LIGHTING	CHANTRY CLOSE	GRIMSBY	526212.6	409466.4	1968		45573	Urbis	Axia 8 LED 350mA	10 Watts	5.00 Metres	Steel	
Y	2	STREET LIGHTING	CHANTRY CLOSE	GRIMSBY	526227.54	409485.7	1968		45574	Urbis	Axia 8 LED 350mA	10 Watts	5.00 Metres	Steel	
Y	3	STREET LIGHTING	CHANTRY CLOSE	GRIMSBY	526193.93	409485.86	2021	05/10/2021	68695	Urbis	Axia 8 LED 350mA	10 Watts	6.00 Metres	Galvanised Steel	
Y	1	STREET LIGHTING	HAVEN TERRACE	GRIMSBY			2024	30/10/2024	70026	Urbis	Axia 16 LED 350mA	19 Watts	6.00 Metres	Galvanised Steel	
Y	2	STREET LIGHTING	HAVEN TERRACE	GRIMSBY	526426.15	409674.14	1983		50330	Urbis	Axia 16 LED 350mA	19 Watts	6.00 Metres	Galvanised Steel	
Y	3	STREET LIGHTING	HAVEN TERRACE	GRIMSBY	526415.01	409702.94	1983		50331	Urbis	Axia 16 LED 350mA	19 Watts	6.00 Metres	Galvanised Steel	
Y	1	STREET LIGHTING	HUMBER TERRACE	GRIMSBY			2024	12/11/2024	70047	Urbis	Axia 16 LED 350mA	19 Watts	6.00 Metres	Galvanised Steel	
Y	2	STREET LIGHTING	HUMBER TERRACE	GRIMSBY	526374.37	409743.78	1985		51048	Urbis	Axia 16 LED 350mA	19 Watts	6.00 Metres	Galvanised Steel	
Y	1	STREET LIGHTING	VERE TERRACE	GRIMSBY	526500.2	409596.49	1975		59542	Urbis	Axia 8 LED 350mA	10 Watts	6.00 Metres	Galvanised Steel	
Y	2	STREET LIGHTING	VERE TERRACE	GRIMSBY	526473.18	409612.8	2021	12/10/2021	68741	Urbis	Axia 16 LED 350mA	19 Watts	6.00 Metres	Galvanised Steel	
Y	3	STREET LIGHTING	VERE TERRACE	GRIMSBY	526450.58	409637.69	1975		59544	Urbis	Axia 8 LED 350mA	10 Watts	6.00 Metres	Galvanised Steel	
Y	1	STREET LIGHTING	QUEENS PARADE 10FT	GRIMSBY	526489.53	409198.59	1999		55813	Urbis	Axia 16 LED 350mA	19 Watts	5.00 Metres	Galvanised Steel	
Y	2	STREET LIGHTING	QUEENS PARADE 10FT	GRIMSBY	526469.66	409204.54	1999		55814	Urbis	Axia 16 LED 350mA	19 Watts	5.00 Metres	Galvanised Steel	
Y	3	STREET LIGHTING	QUEENS PARADE 10FT	GRIMSBY	526433.51	409217.12	2018	16/08/2018	66985	Urbis	Axia 16 LED 350mA	19 Watts	6.00 Metres	Galvanised Steel	
Y	4	STREET LIGHTING	QUEENS PARADE 10FT	GRIMSBY	526397.78	409233.4	2018	16/08/2018	67195	Urbis	Axia 16 LED 350mA	19 Watts	6.00 Metres	Galvanised Steel	
Y	5	STREET LIGHTING	QUEENS PARADE 10FT	GRIMSBY	526364.21	409254.31	1963		55817	Urbis	Axia 16 LED 350mA	19 Watts	5.00 Metres	Steel	
Y	1	STREET LIGHTING	QUEENS PARADE	GRIMSBY	526317.93	409210.46	1997		55805	Urbis	Axia 8 LED 350mA	10 Watts	5.00 Metres	Galvanised Steel	
Y	2	STREET LIGHTING	QUEENS PARADE	GRIMSBY	526340.46	409198.44	1997		55806	Urbis	Axia 8 LED 350mA	10 Watts	5.00 Metres	Galvanised Steel	
Y	3	STREET LIGHTING	QUEENS PARADE	GRIMSBY	526359.07	409188.5	1997		55807	Urbis	Axia 8 LED 350mA	10 Watts	5.00 Metres	Galvanised Steel	
Y	4	STREET LIGHTING	QUEENS PARADE	GRIMSBY	526380.84	409176.92	1997		55808	Urbis	Axia 8 LED 350mA	10 Watts	5.00 Metres	Galvanised Steel	
Y	5	STREET LIGHTING	QUEENS PARADE	GRIMSBY	526407.55	409164.33	1997		55809	Urbis	Axia 8 LED 350mA	10 Watts	5.00 Metres	Galvanised Steel	
Y	6	STREET LIGHTING	QUEENS PARADE	GRIMSBY	526434.13	409155.91	1997		55810	Urbis	Axia 8 LED 350mA	10 Watts	5.00 Metres	Galvanised Steel	
Y	7	STREET LIGHTING	QUEENS PARADE	GRIMSBY	526455.65	409148.89	1997		55811	Urbis	Axia 8 LED 350mA	10 Watts	5.00 Metres	Galvanised Steel	
Y	8	STREET LIGHTING	QUEENS PARADE	GRIMSBY	526478.31	409142.05	1997		55812	Urbis	Axia 8 LED 350mA	10 Watts	5.00 Metres	Galvanised Steel	
Y	1	STREET LIGHTING	BOULEVARD WALK	GRIMSBY	525829.55	409619.93	2010		44414	Urbis	Axia 16 LED 350mA	19 Watts	6.00 Metres	Steel	
Y	2	STREET LIGHTING	BOULEVARD WALK	GRIMSBY	525804.36	409591.19	2010		44415	Urbis	Axia 16 LED 350mA	19 Watts	6.00 Metres	Steel	
Y	3	STREET LIGHTING	BOULEVARD WALK	GRIMSBY	525782.97	409570.62	2010		44416	Urbis	Axia 16 LED 350mA	19 Watts	6.00 Metres	Steel	
Y	4	STREET LIGHTING	BOULEVARD WALK	GRIMSBY	525760.82	409546.57	2005		44417	Urbis	Axia 16 LED 350mA	19 Watts	6.00 Metres	Steel	
Y	1	STREET LIGHTING	BOVILL CLOSE	GRIMSBY	526366.73	409397.68	2011		44427	1 Urbis LED	Axia 16 LED 500mA	28 Watts	6.00 Metres	Steel	
Y	2	STREET LIGHTING	BOVILL CLOSE	GRIMSBY	526347.74	409406.58	2011		44428	1 Urbis LED	Axia 16 LED 500mA	28 Watts	6.00 Metres	Steel	
Y	3	STREET LIGHTING	BOVILL CLOSE	GRIMSBY	526346.63	409384.73	2011		44429	1 Urbis LED	Axia 16 LED 500mA	28 Watts	6.00 Metres	Steel	
Y	4	STREET LIGHTING	BOVILL CLOSE	GRIMSBY	526330.64	409406.71	2011		44430	1 Urbis LED	Axia 16 LED 500mA	28 Watts	6.00 Metres	Steel	
Y	5	STREET LIGHTING	BOVILL CLOSE	GRIMSBY	526368.3	409374.39	2011		44431	1 Urbis LED	Axia 16 LED 500mA	28 Watts	6.00 Metres	Galvanised Steel	
Y	6	STREET LIGHTING	BOVILL CLOSE	GRIMSBY	526353.97	409365.41	2011		44432	1 Urbis LED	Axia 16 LED 500mA	28 Watts	6.00 Metres	Steel	
Y	7	STREET LIGHTING	BOVILL CLOSE	GRIMSBY	526382.05	409382.17	2011		44433	1 Urbis LED	Axia 16 LED 500mA	28 Watts	6.00 Metres	Steel	
Y	8	STREET LIGHTING	BOVILL CLOSE	GRIMSBY	526377.94	409355.93	2011		44434	1 Urbis LED	Axia 16 LED 500mA	28 Watts	6.00 Metres	Steel	
Y	9	STREET LIGHTING	BOVILL CLOSE	GRIMSBY	526361.2	409341.84	2011		44435	1 Urbis LED	Axia 16 LED 500mA	28 Watts	6.00 Metres	Steel	
Y	1	STREET LIGHTING	BREWERY STREET	GRIMSBY	526859.64	409359.15	1991		61464	Elkamet		50 Watts	5.00 Metres	Steel	
Y	1	STREET LIGHTING	BREWERY STREET	GRIMSBY	526859.64	409359.15	1991		61996	Elkamet		50 Watts	5.00 Metres	Steel	
Y	2	STREET LIGHTING	BREWERY STREET	GRIMSBY	526855.59	409369.78	1991		61466	Elkamet		50 Watts	5.00 Metres	Steel	
Y	2	STREET LIGHTING	BREWERY STREET	GRIMSBY	526855.59	409369.78	1991		61998	Elkamet		50 Watts	5.00 Metres	Steel	
Y	1	STREET LIGHTING	BULL RING LANE	GRIMSBY	526661.61	409243.75	1991		44914	Metcraft		100 Watts	8.00 Metres	Unknown	
Y	2	STREET LIGHTING	BULL RING LANE	GRIMSBY	526685.51	409253.88	1991		44915	Metcraft		100 Watts	8.00 Metres	Unknown	
Y	1	STREET LIGHTING	SOUTHLAND COURT	GRIMSBY	524514.11	409973.23	1968		57421	Urbis	Axia 16 LED 350mA	19 Watts	5.00 Metres	Aluminium	
Y	2	STREET LIGHTING	SOUTHLAND COURT	GRIMSBY	524499.94	409995.45	1998		57422	Urbis	Axia 16 LED 350mA	19 Watts	5.00 Metres	Galvanised Steel	
Y	3	STREET LIGHTING	SOUTHLAND COURT	GRIMSBY	524522.34	410008.74	1998		57423	Urbis	Axia 16 LED 350mA	19 Watts	5.00 Metres	Galvanised Steel	
Y	4	STREET LIGHTING	SOUTHLAND COURT	GRIMSBY	524490.07	410012.86	2005		57424	Urbis	Axia 16 LED 350mA	19 Watts	6.00 Metres	Galvanised Steel	
Y	5	STREET LIGHTING	SOUTHLAND COURT	GRIMSBY	524517.41	410029.88	1998		57425	Urbis	Axia 16 LED 350mA	19 Watts	5.00 Metres	Galvanised Steel	
Y	6	STREET LIGHTING	SOUTHLAND COURT	GRIMSBY	524497.41	410044.31	2006		57426	Urbis	Axia 16 LED 350mA	19 Watts	6.00 Metres	Galvanised Steel	
Y	1	STREET LIGHTING	SILVER STREET	GRIMSBY	526817.87	409341.99	1991		57219	1 Urbis LED	Teceo 24 LED 500mA	40 Watts	6.00 Metres	Steel	
Y	2	STREET LIGHTING	SILVER STREET	GRIMSBY	526824.45	409359.84	1991		57220	1 Urbis LED	Teceo 24 LED 500mA	40 Watts	6.00 Metres	Steel	
Y	1	STREET LIGHTING	COPE STREET	GRIMSBY			2024	30/10/2024	70032	Urbis	Axia 16 LED 500mA	28 Watts	6.00 Metres	Steel	
Y	2	STREET LIGHTING	COPE STREET	GRIMSBY	528118.39	409899.45	2012		46684	1 Urbis LED	Axia 16 LED 500mA	28 Watts	6.00 Metres	Steel	
Y	3	STREET LIGHTING	COPE STREET	GRIMSBY	528140.81	409890.9	1963		46685	1 Urbis LED	Axia 16 LED 500mA	28 Watts	5.00 Metres	Steel	
Y	4	STREET LIGHTING	COPE STREET	GRIMSBY	528166.01	409876.28	1984		46686	1 Urbis LED	Axia 16 LED 500mA	28 Watts	6.00 Metres	Galvanised Steel	
Y	5	STREET LIGHTING	COPE STREET	GRIMSBY	528185.5	409855.08	1984		46687	1 Urbis LED	Axia 16 LED 500mA	28 Watts	6.00 Metres	Galvanised Steel	
Y	1	STREET LIGHTING	GUILDFORD STREET	GRIMSBY	528186.12	410016.84	2012		49963	1 Urbis LED	Teceo 16 LED 500mA	28 Watts	6.00 Metres	Galvanised Steel	
Y	2	STREET LIGHTING	GUILDFORD STREET	GRIMSBY	528166.62	410013.76	2012		49964	1 Urbis LED	Teceo 16 LED 500mA	28 Watts	6.00 Metres	Galvanised Steel	
Y	3	STREET LIGHTING	GUILDFORD STREET	GRIMSBY	528165.12	409989.85	2012		49965	1 Urbis LED	Teceo 16 LED 500mA	28 Watts	6.00 Metres	Galvanised Steel	
Y	4	STREET LIGHTING	GUILDFORD STREET	GRIMSBY	528145.88	409967.44	2012		49966	1 Urbis LED	Teceo 16 LED 500mA	28 Watts	6.00 Metres	Galvanised Steel	
Y	5	STREET LIGHTING	GUILDFORD STREET	GRIMSBY	528146.3	409936.69	2012		49967	1 Urbis LED	Teceo 16 LED 500mA	28 Watts	6.00 Metres	Galvanised Steel	
Y	6	STREET LIGHTING	GUILDFORD STREET	GRIMSBY	528126.8	409913.45	2012		49968	1 Urbis LED	Teceo 16 LED 500mA	28 Watts	6.00 Metres	Galvanised Steel	
Y	7	STREET LIGHTING	GUILDFORD STREET	GRIMSBY	528117.09	409879.5	1995		66369	1 Urbis LED	Teceo 16 LED 500mA	28 Watts	6.00 Metres	Galvanised Steel	
Y	1	STREET LIGHTING	ORCHARD DRIVE	GRIMSBY	528040.06	409662.52	2012		66854	1 Urbis LED	Axia 24 LED 500mA	40 Watts	6.00 Metres	Galvanised Steel	
Y	2	STREET LIGHTING	ORCHARD DRIVE	GRIMSBY	528060.99	409689.31	2012		66855	1 Urbis LED	Axia 24 LED 500mA	40 Watts	6.00 Metres	Galvanised Steel	
Y	3	STREET LIGHTING	ORCHARD DRIVE	GRIMSBY	528064.43	409731.62	2012		66856	1 Urbis LED	Axia 24 LED 500mA	40 Watts	6.00 Metres	Galvanised Steel	
Y	4	STREET LIGHTING	ORCHARD DRIVE	GRIMSBY	528083.17	409759.65	2012		66857	1 Urbis LED	Axia 24 LED 500mA	40 Watts	6.00 Metres	Galvanised Steel	
Y	5	STREET LIGHTING	ORCHARD DRIVE	GRIMSBY	528081.78	409781.24	2012		66858	1 Urbis LED	Axia 24 LED 500mA	40 Watts	6.00 Metres	Galvanised Steel	
Y	6	STREET LIGHTING	ORCHARD DRIVE	GRIMSBY	528100.37	409808.47	2012		66859	1 Urbis LED	Axia 24 LED 500mA	40 Watts	6.00 Metres	Galvanised Steel	
Y	7	STREET LIGHTING	ORCHARD DRIVE	GRIMSBY	528105.49	409834.67		02/12/2024	66860	Urbis	Axia 24 LED 500mA	28 Watts	6.00 Metres	Galvanised Steel	

Y	1	STREET LIGHTING	HAROLD STREET	GRIMSBY	528204.07	409777.12	1989		50226	1 Urbis LED	Axia 16 LED 500mA	28 Watts	6.00 Metres	Galvanised Steel	
Y	2	STREET LIGHTING	HAROLD STREET	GRIMSBY	528225.59	409770.55	1989		50227	1 Urbis LED	Axia 16 LED 500mA	28 Watts	6.00 Metres	Galvanised Steel	
Y	3	STREET LIGHTING	HAROLD STREET	GRIMSBY	528251.03	409751.25	1989		50228	1 Urbis LED	Axia 16 LED 500mA	28 Watts	6.00 Metres	Galvanised Steel	
Y	4	STREET LIGHTING	HAROLD STREET	GRIMSBY	528279.13	409753.21	1989		50229	1 Urbis LED	Axia 16 LED 500mA	28 Watts	6.00 Metres	Galvanised Steel	
Y	5	STREET LIGHTING	HAROLD STREET	GRIMSBY	528300.78	409735.55	1989		50230	1 Urbis LED	Axia 16 LED 500mA	28 Watts	6.00 Metres	Galvanised Steel	
Y	6	STREET LIGHTING	HAROLD STREET	GRIMSBY	528330.65	409737.26	1989		50231	1 Urbis LED	Axia 16 LED 500mA	28 Watts	6.00 Metres	Galvanised Steel	
Y	7	STREET LIGHTING	HAROLD STREET	GRIMSBY	528349.64	409719.86	1989		50232	1 Urbis LED	Axia 16 LED 500mA	28 Watts	6.00 Metres	Galvanised Steel	
Y	8	STREET LIGHTING	HAROLD STREET	GRIMSBY	528375.71	409711.31	1989		50233	1 Urbis LED	Axia 16 LED 500mA	28 Watts	6.00 Metres	Galvanised Steel	
Y	9	STREET LIGHTING	HAROLD STREET	GRIMSBY	528405.46	409713.02	1989		50234	1 Urbis LED	Axia 16 LED 500mA	28 Watts	6.00 Metres	Galvanised Steel	
Y	10	STREET LIGHTING	HAROLD STREET	GRIMSBY	528424.06	409696.25	1989		50235	1 Urbis LED	Axia 16 LED 500mA	28 Watts	6.00 Metres	Galvanised Steel	
Y	11	STREET LIGHTING	HAROLD STREET	GRIMSBY	528442.42	409690.36	1992		50236	1 Urbis LED	Axia 16 LED 500mA	28 Watts	6.00 Metres	Galvanised Steel	
Y	12	STREET LIGHTING	HAROLD STREET	GRIMSBY	528471.53	409690.68	1989		50237	1 Urbis LED	Axia 16 LED 500mA	28 Watts	6.00 Metres	Galvanised Steel	
Y	13	STREET LIGHTING	HAROLD STREET	GRIMSBY	528493.05	409684.03	2001		50238	1 Urbis LED	Axia 16 LED 500mA	28 Watts	6.00 Metres	Galvanised Steel	
Y	14	STREET LIGHTING	HAROLD STREET	GRIMSBY	528520.51	409677	1989		50239	1 Urbis LED	Axia 16 LED 500mA	28 Watts	6.00 Metres	Galvanised Steel	
Y	15	STREET LIGHTING	HAROLD STREET	GRIMSBY	528569.12	409661.31	1989		50240	1 Urbis LED	Axia 16 LED 500mA	28 Watts	6.00 Metres	Galvanised Steel	
Y	16	STREET LIGHTING	HAROLD STREET	GRIMSBY	528606.31	409639.19	2016	25/01/2016	50241	1 Urbis LED	Axia 16 LED 500mA	28 Watts	6.00 Metres	Galvanised Steel	
Y	17	STREET LIGHTING	HAROLD STREET	GRIMSBY	528648.28	409635.98	2007		50242	1 Urbis LED	Axia 16 LED 500mA	28 Watts	6.00 Metres	Stainless Steel	
Y	18	STREET LIGHTING	HAROLD STREET	GRIMSBY	528673.9	409616.41	1989		50243	1 Urbis LED	Axia 16 LED 500mA	28 Watts	6.00 Metres	Galvanised Steel	
Y	1	STREET LIGHTING	FOOTPATH BETWEEN HAROLD	GRIMSBY	528577.64	409696.68	2020	14/02/2020	67639	Urbis	Axia 8 LED 350mA	10 Watts	6.00 Metres	Steel	
Y	2	STREET LIGHTING	FOOTPATH BETWEEN HAROLD	GRIMSBY	528606	409687	1989		48727	Urbis	Axia 8 LED 350mA	10 Watts	5.00 Metres	Steel	
Y	3	STREET LIGHTING	FOOTPATH BETWEEN HAROLD	GRIMSBY	528630	409680	1989		48728	Urbis	Axia 8 LED 350mA	10 Watts	5.00 Metres	Steel	
Y	1	STREET LIGHTING	HILDA STREET	GRIMSBY	528296.35	410287.81	1990		50808	1 Urbis LED	Axia 16 LED 500mA	28 Watts	5.00 Metres	Steel	
Y	2	STREET LIGHTING	HILDA STREET	GRIMSBY	528284.1	410254.35	2019	07/10/2019	67638	Urbis	Teceo 16 LED 500mA	28 Watts	6.00 Metres	Galvanised Steel	
Y	3	STREET LIGHTING	HILDA STREET	GRIMSBY	528273.52	410227	2023	03/07/2023	69293	Urbis	Teceo 24 LED 500mA	40 Watts	8.00 Metres	Galvanised Steel	
Y	4	STREET LIGHTING	HILDA STREET	GRIMSBY	528259.13	410186.42	2003		50811	Urbis	Teceo 24 LED 500mA	40 Watts	6.00 Metres	Stainless Steel	
Y	5	STREET LIGHTING	HILDA STREET	GRIMSBY	528251.19	410158.99	2012		50812	Urbis	Teceo 24 LED 500mA	40 Watts	6.00 Metres	Steel	
Y	6	STREET LIGHTING	HILDA STREET	GRIMSBY	528252.43	410125.14	1990		50813	Urbis	Teceo 24 LED 500mA	40 Watts	5.00 Metres	Steel	
Y	7	STREET LIGHTING	HILDA STREET	GRIMSBY	528208.92	410010.65	1990		50814	1 Urbis LED	Axia 16 LED 500mA	28 Watts	6.00 Metres	Galvanised Steel	
Y	8	STREET LIGHTING	HILDA STREET	GRIMSBY	528200.21	409985.13	1990		50815	1 Urbis LED	Axia 16 LED 500mA	28 Watts	6.00 Metres	Galvanised Steel	
Y	9	STREET LIGHTING	HILDA STREET	GRIMSBY				02/06/2025	70214	Urbis	Axia 16 LED 500mA	28 Watts	6.00 Metres	Galvanised Steel	
Y	11	STREET LIGHTING	HILDA STREET	GRIMSBY	528157.78	409894.86	1990		50818	1 Urbis LED	Axia 16 LED 500mA	28 Watts	6.00 Metres	Galvanised Steel	
Y	1	STREET LIGHTING	HILDYARD STREET	GRIMSBY	528257.52	409928.67	1991		50824	Urbis	Axia 16 LED 350mA	19 Watts	6.00 Metres	Galvanised Steel	
Y	2	STREET LIGHTING	HILDYARD STREET	GRIMSBY	528277.67	409911.3	1991		50825	Urbis	Axia 16 LED 350mA	19 Watts	6.00 Metres	Galvanised Steel	
Y	3	STREET LIGHTING	HILDYARD STREET	GRIMSBY	528307.29	409912.75	1991		50826	Urbis	Axia 16 LED 350mA	19 Watts	6.00 Metres	Galvanised Steel	
Y	4	STREET LIGHTING	HILDYARD STREET	GRIMSBY	528327.92	409895.03	1991		50827	Urbis	Axia 16 LED 350mA	19 Watts	6.00 Metres	Galvanised Steel	
Y	5	STREET LIGHTING	HILDYARD STREET	GRIMSBY	528356.91	409897.25	1991		50828	Urbis	Axia 16 LED 350mA	19 Watts	6.00 Metres	Galvanised Steel	
Y	6	STREET LIGHTING	HILDYARD STREET	GRIMSBY	528375.04	409891.59	1991		50829	Urbis	Axia 16 LED 350mA	19 Watts	6.00 Metres	Galvanised Steel	
Y	7	STREET LIGHTING	HILDYARD STREET	GRIMSBY	528396.3	409874.82	2017		50830	Urbis	Axia 16 LED 350mA	19 Watts	6.00 Metres	Galvanised Steel	
Y	8	STREET LIGHTING	HILDYARD STREET	GRIMSBY	528433.9	409871.72	2016	29/01/2016	50831	Urbis	Axia 16 LED 350mA	19 Watts	6.00 Metres	Galvanised Steel	
Y	9	STREET LIGHTING	HILDYARD STREET	GRIMSBY	528469.21	409851.03	1991		50832	Urbis	Axia 16 LED 350mA	19 Watts	6.00 Metres	Galvanised Steel	
Y	10	STREET LIGHTING	HILDYARD STREET	GRIMSBY	528494.03	409843.31	1991		50833	Urbis	Axia 16 LED 350mA	19 Watts	6.00 Metres	Galvanised Steel	
Y	11	STREET LIGHTING	HILDYARD STREET	GRIMSBY	528517.06	409846.47	1991		50834	Urbis	Axia 16 LED 350mA	19 Watts	5.00 Metres	Steel	
Y	12	STREET LIGHTING	HILDYARD STREET	GRIMSBY	528549.34	409826.66	1991		50835	Urbis	Axia 16 LED 350mA	19 Watts	5.00 Metres	Steel	
Y	13	STREET LIGHTING	HILDYARD STREET	GRIMSBY	528580.48	409833.94	1991		50836	Urbis	Axia 16 LED 350mA	19 Watts	5.00 Metres	Steel	
Y	14	STREET LIGHTING	HILDYARD STREET	GRIMSBY	528603.14	409825.9	1991		50837	Urbis	Axia 16 LED 350mA	19 Watts	5.00 Metres	Steel	
Y	15	STREET LIGHTING	HILDYARD STREET	GRIMSBY	528619.21	409826.2	1995		50838	Urbis	Axia 16 LED 350mA	19 Watts	6.00 Metres	Galvanised Steel	
Y	16	STREET LIGHTING	HILDYARD STREET	GRIMSBY	528623.79	409813.05	2019	10/12/2019	67637	Urbis	Axia 16 LED 350mA	19 Watts	6.00 Metres	Galvanised Steel	
Y	17	STREET LIGHTING	HILDYARD STREET	GRIMSBY	528661.62	409801.73	1991		50840	Urbis	Axia 16 LED 350mA	19 Watts	5.00 Metres	Steel	
Y	18	STREET LIGHTING	HILDYARD STREET	GRIMSBY	528611.85	409800.1	2019	07/10/2019	67636	Urbis	Axia 16 LED 350mA	19 Watts	6.00 Metres	Galvanised Steel	
Y	19	STREET LIGHTING	HILDYARD STREET	GRIMSBY	528619.47	409790	1991		50842	Urbis	Axia 16 LED 350mA	19 Watts	5.00 Metres	Steel	
Y	20	STREET LIGHTING	HILDYARD STREET	GRIMSBY	528610.48	409760.82	1991		50843	Urbis	Axia 16 LED 350mA	19 Watts	5.00 Metres	Steel	
Y	21	STREET LIGHTING	HILDYARD STREET	GRIMSBY	528616.05	409737.85	1991		50844	Urbis	Axia 16 LED 350mA	19 Watts	5.00 Metres	Steel	
Y	1	STREET LIGHTING	TUNNARD STREET	GRIMSBY	528222.59	409854.7	1992		59468	Urbis	Axia 16 LED 350mA	19 Watts	6.00 Metres	Galvanised Steel	
Y	2	STREET LIGHTING	TUNNARD STREET	GRIMSBY	528246.13	409836.6	1992		59469	Urbis	Axia 16 LED 350mA	19 Watts	6.00 Metres	Galvanised Steel	
Y	3	STREET LIGHTING	TUNNARD STREET	GRIMSBY	528277.27	409837.68	1992		59470	Urbis	Axia 16 LED 350mA	19 Watts	6.00 Metres	Galvanised Steel	
Y	4	STREET LIGHTING	TUNNARD STREET	GRIMSBY	528299.68	409819.52	1992		59471	Urbis	Axia 16 LED 350mA	19 Watts	6.00 Metres	Galvanised Steel	
Y	5	STREET LIGHTING	TUNNARD STREET	GRIMSBY	528326.77	409811	1992		59472	Urbis	Axia 16 LED 350mA	19 Watts	6.00 Metres	Galvanised Steel	
Y	6	STREET LIGHTING	TUNNARD STREET	GRIMSBY	528353.98	409813.34	1992		59473	Urbis	Axia 16 LED 350mA	19 Watts	6.00 Metres	Galvanised Steel	
Y	7	STREET LIGHTING	TUNNARD STREET	GRIMSBY	528377.65	409805.94	1992		59474	Urbis	Axia 16 LED 350mA	19 Watts	6.00 Metres	Galvanised Steel	
Y	8	STREET LIGHTING	TUNNARD STREET	GRIMSBY	528400.56	409798.53	1992		59475	Urbis	Axia 16 LED 350mA	19 Watts	6.00 Metres	Galvanised Steel	
Y	9	STREET LIGHTING	TUNNARD STREET	GRIMSBY	528423.73	409780.31	1992		59476	Urbis	Axia 16 LED 350mA	19 Watts	6.00 Metres	Galvanised Steel	
Y	10	STREET LIGHTING	TUNNARD STREET	GRIMSBY	528451.7	409782.52	1992		59477	Urbis	Axia 16 LED 350mA	19 Watts	6.00 Metres	Galvanised Steel	
Y	11	STREET LIGHTING	TUNNARD STREET	GRIMSBY	528471.83	409765.03	1992		59478	Urbis	Axia 16 LED 350mA	19 Watts	6.00 Metres	Galvanised Steel	
Y	12	STREET LIGHTING	TUNNARD STREET	GRIMSBY	528498.79	409767.5	1992		59479	Urbis	Axia 16 LED 350mA	19 Watts	6.00 Metres	Galvanised Steel	
Y	13	STREET LIGHTING	TUNNARD STREET	GRIMSBY	528522.97	409759.72	1992		59480	Urbis	Axia 16 LED 350mA	19 Watts	6.00 Metres	Galvanised Steel	
Y	14	STREET LIGHTING	TUNNARD STREET	GRIMSBY	528544.99	409741.93	1992		59481	Urbis	Axia 16 LED 350mA	19 Watts	6.00 Metres	Galvanised Steel	
Y	15	STREET LIGHTING	TUNNARD STREET	GRIMSBY	528572.59	409743.9	1992		59482	Urbis	Axia 16 LED 350mA	19 Watts	6.00 Metres	Galvanised Steel	
Y	16	STREET LIGHTING	TUNNARD STREET	GRIMSBY	528595.24	409725.99	1992		59483	Urbis	Axia 16 LED 350mA	19 Watts	6.00 Metres	Galvanised Steel	
Y	17	STREET LIGHTING	TUNNARD STREET	GRIMSBY	528623.22	409727.69	1992		59484	Urbis	Axia 16 LED 350mA	19 Watts	6.00 Metres	Galvanised Steel	
Y	18	STREET LIGHTING	TUNNARD STREET	GRIMSBY	528649.67	409719.78	1992		59485	Urbis	Axia 16 LED 350mA	19 Watts	6.00 Metres	Galvanised Steel	
Y	19	STREET LIGHTING	TUNNARD STREET	GRIMSBY	528668.53	409702.51	1992		59486	Urbis	Axia 16 LED 350mA	19 Watts	6.00 Metres	Galvanised Steel	
Y	1	STREET LIGHTING	CASTLE STREET	GRIMSBY	528118.77	409717.67	1991		45439	1 Urbis LED	Axia 16 LED 500mA	28 Watts	6.00 Metres	Galvanised Steel	
Y	2	STREET LIGHTING	CASTLE STREET	GRIMSBY	528142.56	409699	1991		45440	1 Urbis LED	Axia 16 LED 500mA	28 Watts	6.00 Metres	Galvanised Steel	
Y	3	STREET LIGHTING	CASTLE STREET	GRIMSBY	528173.07	409700.7	1991		45441	1 Urbis LED	Axia 16 LED 500mA	28 Watts	6.00 Metres	Galvanised Steel	
Y	4	STREET LIGHTING	CASTLE STREET	GRIMSBY	528197.75	409692.92	1991		45442	1 Urbis LED	Axia 16 LED 500mA	28 Watts	6.00 Metres	Galvanised Steel	
Y	5	STREET LIGHTING	CASTLE STREET	GRIMSBY	528221.17	409674.12	1991		45443	1 Urbis LED	Axia 16 LED 500mA	28 Watts	6.00 Metres	Galvanised Steel	
Y	6	STREET LIGHTING	CASTLE STREET	GRIMSBY	528249.01	409665.33	1991		45444	1 Urbis LED	Axia 16 LED 500mA	28 Watts	6.00 Metres	Galvanised Steel	
Y	7	STREET LIGHTING	CASTLE STREET	GRIMSBY	528276.61	409656.53	1991		45445	1 Urbis LED	Axia 16 LED 500mA	28 Watts	6.00 Metres	Galvanised Steel	
Y	8	STREET LIGHTING	CASTLE STREET	GRIMSBY	528306.1	409658.24	1991		45446	1 Urbis LED	Axia 16 LED 500mA	28 Watts	6.00 Metres	Galvanised Steel	
Y	9	STREET LIGHTING	CASTLE STREET	GRIMSBY	528329.34	409651.09	1991		45447	1 Urbis LED	Axia 16 LED 500mA	28 Watts	6.00 Metres	Galvanised Steel	
Y	10	STREET LIGHTING	CASTLE STREET	GRIMSBY	528354.02	409642.8	1991		45448	1 Urbis LED	Axia 16 LED 500mA	28 Watts	6.00 Metres	Galvanised Steel	
Y	11	STREET LIGHTING	CASTLE STREET	GRIMSBY	528378.2	409635.27	1991		45449	1 Urbis LED	Axia 16 LED 500mA	28 Watts	6.00 Metres	Galvanised Steel	
Y	12	STREET LIGHTING	CASTLE STREET	GRIMSBY	528401.49	409616.6	1991		45450	1 Urbis LED	Axia 16 LED 500mA	28 Watts	6.00 Metres	Galvanised Steel	
Y	13	STREET LIGHTING	CASTLE STREET	GRIMSBY	528422.75	409609.82	1991		45451	1 Urbis LED	Axia 16 LED 500mA	28 Watts	6.00 Metres	Galvanised Steel	
Y	14	STREET LIGHTING	CASTLE STREET	GRIMSBY	528446.3	409613.56	1991		45452	1 Urbis LED	Axia 16 LED 500mA	28 Watts	6.00 Metres	Galvanised Steel	
Y	15	STREET LIGHTING	CASTLE STREET	GRIMSBY	528470.47	409595.77	2008		45453	1 Urbis LED	Axia 16 LED 500mA	28 Watts	6.00 Metres	Steel	
Y	16	STREET LIGHTING	CASTLE STREET	GRIMSBY	528512.5	409581.4	1991		45454	1 Urbis LED	Axia 16 LED 500mA	28 Watts	6.00 Metres	Galvanised Steel	
Y	17	STREET LIGHTING	CASTLE STREET	GRIMSBY	528557.3	409568.24	1991		45455	1 Urbis LED	Axia 16 LED 500mA	28 Watts	6.00 Metres	Galvanised Steel	
Y	18	STREET LIGHTING	CASTLE STREET	GRIMSBY	528586.75	409569.15	2009		61476	1 Urbis LED	Axia 16 LED 500mA	28 Watts	6.00 Metres	Steel	
Y	18	STREET LIGHTING	CASTLE STREET	GRIMSBY	528586.75	409569.15	2009		62008	1 Urbis LED	Axia 16 LED 500mA	28 Watts	6.00 Metres	Steel	
Y	19	STREET LIGHTING	CASTLE STREET	GRIMSBY	528612.28	409560.94	2009		61477	1 Urbis LED	Axia 16 LED 500mA	28 Watts	6.00 Metres	Steel	
Y	19	STREET LIGHTING	CASTLE STREET	GRIMSBY	528612.28	409560.94	2009		62009	1 Urbis LED	Axia 16 LED 500mA	28 Watts	6.00 Metres	Steel	
Y	20	STREET LIGHTING	CASTLE STREET	GRIMSBY	528641.98	409539.69	1991		45456	1 Urbis LED	Axia 16 LED 500mA	28 Watts	6.00 Metres	Galvanised Steel	
Y	21	STREET LIGHTING	CASTLE STREET	GRIMSBY	528670.46	409536.09	1991		45457	1 Urbis LED	Axia 16 LED 500mA	28 Watts	6.00 Metres	Galvanised Steel	
Y	1	STREET LIGHTING	KATHLEEN RICE CLOSE	GRIMSBY	528195.32	409675.51	1999		51477	Urbis	Axia 16 LED 350mA	19 Watts	5.00 Metres	Galvanised Steel	
Y	2	STREET LIGHTING	KATHLEEN RICE CLOSE	GRIMSBY	528188.96	409659.43	2023	30/01/2023	69204	Urbis	Axia 16 LED 350mA	19 Watts	6.00 Metres	Galvanised Steel	
Y	3	STREET LIGHTING	KATHLEEN RICE CLOSE	GRIMSBY	528183.71	409650.07	2023	30/01/2023	69892	Urbis	Axia 16 LED 350mA	19 Watts	6.00 Metres	Galvanised Steel	
Y	1	STREET LIGHTING	HANSON WAY	GRIMSBY	528542.43	409761.63	1963		50137	Urbis	Axia 16 LED 350mA	19 Watts	5.00 Metres	Steel	
Y	2	STREET LIGHTING	HANSON WAY	GRIMSBY	528523.45	409783.35	2013		50138	1 Urbis LED	Axia 16 LED 500mA	28 Watts	6.00 Metres	Galvanised Steel	
Y	3	STREET LIGHTING	HANSON WAY	GRIMSBY	528532.49	409813.23	1963		50139	Urbis	Axia 16 LED 350mA	19 Watts	5.00 Metres	Steel	
Y	4	STREET LIGHTING	HANSON WAY	GRIMSBY	528552.56	409795.18	1963		50140	Urbis	Axia 16 LED 350mA	19 Watts	5.00 Metres	Steel	
Y	5	STREET LIGHTING	HANSON WAY	GRIMSBY	528568.13	409773.98	1963		50141	Urbis	Axia 16 LED 350mA	19 Watts	5.00 Metres	Steel	
Y	6	STREET LIGHTING	HANSON WAY	GRIMSBY	528580.53	409769.48	1995		50142	Urbis	Axia 16 LED 350mA	19 Watts	6.00 Metres	Steel	
Y	1	STREET LIGHTING	WELLINGTON STREET CAR PARK	GRIMSBY	527698.28	409714.93	2014		66331	1 Urbis LED	Teceo 48 LED 700mA	104 Watts	10.00 Metres	Galvanised Steel	
Y	2	STREET LIGHTING	WELLINGTON STREET CAR PARK	GRIMSBY	527663.28	409694.71	2014		66332	1 Urbis LED	Teceo 48 LED 700mA	104 Watts	10.00 Metres	Galvanised Steel	
Y	3	STREET LIGHTING	WELLINGTON STREET CAR PARK	GRIMSBY	527660.91	409673.98	2014		66333	1 Urbis LED	Teceo 48 LED 700mA	104 Watts	10.00 Metres	Galvanised Steel	
Y	4	STREET LIGHTING	WELLINGTON STREET CAR PARK	GRIMSBY	527681.53	409649.86	2003		60235	1 Urbis LED	Teceo 48 LED 700mA	104 Watts	10.00 Metres	Stainless Steel	
Y	5	STREET LIGHTING	WELLINGTON STREET CAR PARK	GRIMSBY	527705.91	409664.81	2014		66334	1 Urbis LED	Teceo 48 LED 700mA	104 Watts	10.00 Metres	Galvanised Steel	
Y	6	STREET LIGHTING	WELLINGTON STREET CAR PARK	GRIMSBY	527696.49	409689.77	2003		61953	1 Urbis LED	Teceo 48 LED 700mA	104 Watts	10.00 Metres	Stainless Steel	
Y	6	STREET LIGHTING	WELLINGTON STREET CAR PARK	GRIMSBY	527696.49	409689.77	2003		62502	1 Urbis LED	Teceo 48 LED 700mA	104 Watts	10.00 Metres	Stainless Steel	

Y	1	STREET LIGHTING	THE SQUARE	GRIMSBY	528158.9	409766.53	1982		59052	1 Urbis LED	Axia 16 LED 500mA	28 Watts	6.00 Metres	Galvanised Steel	
Y	2	STREET LIGHTING	THE SQUARE	GRIMSBY	528117.25	409775.01	1982		59053	1 Urbis LED	Axia 16 LED 500mA	28 Watts	6.00 Metres	Galvanised Steel	
Y	1	STREET LIGHTING	WOODYARD COURT	GRIMSBY	528547.76	409469.64	2006		61177	Urbis	Axia 16 LED 350mA	19 Watts	6.00 Metres	Stainless Steel	
Y	2	STREET LIGHTING	WOODYARD COURT	GRIMSBY	528556.7	409443.22	2006		61178	Urbis	Axia 16 LED 350mA	19 Watts	6.00 Metres	Stainless Steel	
Y	3	STREET LIGHTING	WOODYARD COURT	GRIMSBY	528539.98	409445.29	2006		61179	Urbis	Axia 16 LED 350mA	19 Watts	6.00 Metres	Stainless Steel	
Y	4	STREET LIGHTING	WOODYARD COURT	GRIMSBY	528547.43	409436.43	2006		61180	Urbis	Axia 16 LED 350mA	19 Watts	6.00 Metres	Stainless Steel	
Y	5	STREET LIGHTING	WOODYARD COURT	GRIMSBY	528545.44	409430.31	2006		61181	Urbis	Axia 16 LED 350mA	19 Watts	6.00 Metres	Stainless Steel	
Y	6	STREET LIGHTING	WOODYARD COURT	GRIMSBY	528565.89	409423.93	2006		61182	Urbis	Axia 16 LED 350mA	19 Watts	6.00 Metres	Stainless Steel	
Y	1	STREET LIGHTING	GRANT THORALD PARK	GRIMSBY	528290.64	409287.04	2003		49453	1 Urbis LED	Axia 16 LED 500mA	28 Watts	6.00 Metres	Galvanised Steel	
Y	2	STREET LIGHTING	GRANT THORALD PARK	GRIMSBY	528281.3	409314.6	2003		49454	1 Urbis LED	Axia 16 LED 500mA	28 Watts	6.00 Metres	Galvanised Steel	
Y	3	STREET LIGHTING	GRANT THORALD PARK	GRIMSBY	528266.6	409348.24	2003		49455	1 Urbis LED	Axia 16 LED 500mA	28 Watts	6.00 Metres	Galvanised Steel	
Y	4	STREET LIGHTING	GRANT THORALD PARK	GRIMSBY	528245.14	409375.1	2003		49456	1 Urbis LED	Axia 16 LED 500mA	28 Watts	6.00 Metres	Galvanised Steel	
Y	5	STREET LIGHTING	GRANT THORALD PARK	GRIMSBY	528305.44	409343.74	2003		49457	1 Urbis LED	Axia 16 LED 500mA	28 Watts	6.00 Metres	Galvanised Steel	
Y	6	STREET LIGHTING	GRANT THORALD PARK	GRIMSBY	528241.97	409411.92	2003		49458	1 Urbis LED	Axia 16 LED 500mA	28 Watts	6.00 Metres	Galvanised Steel	
Y	7	STREET LIGHTING	GRANT THORALD PARK	GRIMSBY	528260.91	409396.47	2003		49459	1 Urbis LED	Axia 16 LED 500mA	28 Watts	6.00 Metres	Galvanised Steel	
Y	8	STREET LIGHTING	GRANT THORALD PARK	GRIMSBY	528299.34	409382.48	2003		49460	1 Urbis LED	Axia 16 LED 500mA	28 Watts	6.00 Metres	Galvanised Steel	
Y	9	STREET LIGHTING	GRANT THORALD PARK	GRIMSBY	528332.34	409371.26	2003		49461	1 Urbis LED	Axia 16 LED 500mA	28 Watts	6.00 Metres	Galvanised Steel	
Y	10	STREET LIGHTING	GRANT THORALD PARK	GRIMSBY	528275.4	409413.54	2003		49462	1 Urbis LED	Axia 16 LED 500mA	28 Watts	6.00 Metres	Galvanised Steel	
Y	11	STREET LIGHTING	GRANT THORALD PARK	GRIMSBY	528308.7	409405.04	2003		49463	1 Urbis LED	Axia 16 LED 500mA	28 Watts	6.00 Metres	Galvanised Steel	
Y	12	STREET LIGHTING	GRANT THORALD PARK	GRIMSBY	528332.34	409395.44	2003		49464	1 Urbis LED	Axia 16 LED 500mA	28 Watts	6.00 Metres	Galvanised Steel	
Y	13	STREET LIGHTING	GRANT THORALD PARK	GRIMSBY	528386.41	409302.23	2003		49465	1 Urbis LED	Axia 16 LED 500mA	28 Watts	6.00 Metres	Galvanised Steel	
Y	14	STREET LIGHTING	GRANT THORALD PARK	GRIMSBY	528366.67	409318.24	2003		49466	1 Urbis LED	Axia 16 LED 500mA	28 Watts	6.00 Metres	Galvanised Steel	
Y	15	STREET LIGHTING	GRANT THORALD PARK	GRIMSBY	528342.04	409349.71	2003		49467	1 Urbis LED	Axia 16 LED 500mA	28 Watts	6.00 Metres	Galvanised Steel	
Y	16	STREET LIGHTING	GRANT THORALD PARK	GRIMSBY	528385.31	409330.03	2003		49468	1 Urbis LED	Axia 16 LED 500mA	28 Watts	6.00 Metres	Galvanised Steel	
Y	17	STREET LIGHTING	GRANT THORALD PARK	GRIMSBY	528378.3	409372.74	2003		49469	1 Urbis LED	Axia 16 LED 500mA	28 Watts	6.00 Metres	Galvanised Steel	
Y	18	STREET LIGHTING	GRANT THORALD PARK	GRIMSBY	528376.84	409438.14	2023	16/03/2023	49470	1 Urbis LED	Axia 16 LED 500mA	28 Watts	6.00 Metres	Galvanised Steel	
Y	19	STREET LIGHTING	GRANT THORALD PARK	GRIMSBY	528383.54	409414.8	2003		49471	1 Urbis LED	Axia 16 LED 500mA	28 Watts	6.00 Metres	Galvanised Steel	
Y	20	STREET LIGHTING	GRANT THORALD PARK	GRIMSBY	528371.6	409387.04	2003		49472	1 Urbis LED	Axia 16 LED 500mA	28 Watts	6.00 Metres	Galvanised Steel	
Y	21	STREET LIGHTING	GRANT THORALD PARK	GRIMSBY	528351.8	409400.8	2003		49473	1 Urbis LED	Axia 16 LED 500mA	28 Watts	6.00 Metres	Galvanised Steel	
Y	22	STREET LIGHTING	GRANT THORALD PARK	GRIMSBY	528352.54	409420.2	2003		49474	1 Urbis LED	Axia 16 LED 500mA	28 Watts	6.00 Metres	Galvanised Steel	
Y	23	STREET LIGHTING	GRANT THORALD PARK	GRIMSBY	528418.86	409426.22	2003		49475	1 Urbis LED	Axia 16 LED 500mA	28 Watts	6.00 Metres	Galvanised Steel	
Y	24	STREET LIGHTING	GRANT THORALD PARK	GRIMSBY	528448.24	409393.5	2003		49476	1 Urbis LED	Axia 16 LED 500mA	28 Watts	6.00 Metres	Galvanised Steel	
Y	25	STREET LIGHTING	GRANT THORALD PARK	GRIMSBY	528451.6	409351	2003		49477	1 Urbis LED	Axia 16 LED 500mA	28 Watts	6.00 Metres	Galvanised Steel	
Y	26	STREET LIGHTING	GRANT THORALD PARK	GRIMSBY	528425.59	409312.93	2003		49478	1 Urbis LED	Axia 16 LED 500mA	28 Watts	6.00 Metres	Galvanised Steel	
Y	1	STREET LIGHTING	ROBERTS STREET	GRIMSBY	528010.75	409575	2023	02/03/2023	69212	Urbis	Teceo 24 LED 500mA	40 Watts	8.00 Metres	Galvanised Steel	
Y	2	STREET LIGHTING	ROBERTS STREET	GRIMSBY	528026.27	409561.69	2008		56161	Urbis	Axia 16 LED 350mA	19 Watts	6.00 Metres	Steel	
Y	3	STREET LIGHTING	ROBERTS STREET	GRIMSBY	528052.49	409553.03	2008		56162	Urbis	Axia 16 LED 350mA	19 Watts	6.00 Metres	Steel	
Y	4	STREET LIGHTING	ROBERTS STREET	GRIMSBY	528078.77	409544.62	2008		56163	Urbis	Axia 16 LED 350mA	19 Watts	6.00 Metres	Steel	
Y	5	STREET LIGHTING	ROBERTS STREET	GRIMSBY	528095.34	409539.24	2008		56164	Urbis	Axia 16 LED 350mA	19 Watts	6.00 Metres	Steel	
Y	6	STREET LIGHTING	ROBERTS STREET	GRIMSBY	528126.04	409540.91	1991		56165	Urbis	Axia 16 LED 350mA	19 Watts	6.00 Metres	Galvanised Steel	
Y	7	STREET LIGHTING	ROBERTS STREET	GRIMSBY	528152.03	409520.72	1995		56166	Urbis	Axia 16 LED 350mA	19 Watts	6.00 Metres	Galvanised Steel	
Y	8	STREET LIGHTING	ROBERTS STREET	GRIMSBY	528180.19	409523.18	1995		56167	Urbis	Axia 16 LED 350mA	19 Watts	6.00 Metres	Galvanised Steel	
Y	9	STREET LIGHTING	ROBERTS STREET	GRIMSBY	528204.6	409515.54	1995		56168	Urbis	Axia 16 LED 350mA	19 Watts	6.00 Metres	Galvanised Steel	
Y	10	STREET LIGHTING	ROBERTS STREET	GRIMSBY	528231.52	409495.97	1995		56169	Urbis	Axia 16 LED 350mA	19 Watts	6.00 Metres	Galvanised Steel	
Y	11	STREET LIGHTING	ROBERTS STREET	GRIMSBY	528263.93	409496.54	1995		56170	Urbis	Axia 16 LED 350mA	19 Watts	6.00 Metres	Galvanised Steel	
Y	12	STREET LIGHTING	ROBERTS STREET	GRIMSBY	528291	409488	2001		56171	Urbis	Axia 16 LED 350mA	19 Watts	6.00 Metres	Galvanised Steel	
Y	13	STREET LIGHTING	ROBERTS STREET	GRIMSBY	528314.43	409480.33	1991		56172	Urbis	Axia 16 LED 350mA	19 Watts	6.00 Metres	Galvanised Steel	
Y	14	STREET LIGHTING	ROBERTS STREET	GRIMSBY	528340	409473	2001		56173	Urbis	Axia 16 LED 350mA	19 Watts	6.00 Metres	Galvanised Steel	
Y	15	STREET LIGHTING	ROBERTS STREET	GRIMSBY	528368	409453	2001		56174	Urbis	Axia 16 LED 350mA	19 Watts	6.00 Metres	Galvanised Steel	
Y	16	STREET LIGHTING	ROBERTS STREET	GRIMSBY	528391.64	409444.45	1991		56175	Urbis	Axia 16 LED 350mA	19 Watts	6.00 Metres	Galvanised Steel	
Y	17	STREET LIGHTING	ROBERTS STREET	GRIMSBY	528416.64	409448.2	1991		56176	Urbis	Axia 16 LED 350mA	19 Watts	6.00 Metres	Galvanised Steel	
Y	18	STREET LIGHTING	ROBERTS STREET	GRIMSBY	528438.79	409441.3	1991		56177	Urbis	Axia 16 LED 350mA	19 Watts	6.00 Metres	Galvanised Steel	
Y	19	STREET LIGHTING	ROBERTS STREET	GRIMSBY	528453.55	409423.97	1991		56178	Urbis	Axia 16 LED 350mA	19 Watts	6.00 Metres	Galvanised Steel	
Y	20	STREET LIGHTING	ROBERTS STREET	GRIMSBY	528457.09	409393.41	1991		56179	Urbis	Axia 16 LED 350mA	19 Watts	6.00 Metres	Galvanised Steel	
Y	21	STREET LIGHTING	ROBERTS STREET	GRIMSBY	528470.38	409367.29	1991		56180	Urbis	Axia 16 LED 350mA	19 Watts	6.00 Metres	Galvanised Steel	
Y	22	STREET LIGHTING	ROBERTS STREET	GRIMSBY	528482.54	409342.8	1991		56181	Urbis	Axia 16 LED 350mA	19 Watts	6.00 Metres	Galvanised Steel	
Y	23	STREET LIGHTING	ROBERTS STREET	GRIMSBY	528503.17	409325.14	1991		56182	Urbis	Axia 16 LED 350mA	19 Watts	6.00 Metres	Galvanised Steel	
Y	24	STREET LIGHTING	ROBERTS STREET	GRIMSBY	528513.3	409304.95	1991		56183	Urbis	Axia 16 LED 350mA	19 Watts	6.00 Metres	Galvanised Steel	
Y	25	STREET LIGHTING	ROBERTS STREET	GRIMSBY	528516.34	409275.34	1991		56184	Urbis	Axia 16 LED 350mA	19 Watts	6.00 Metres	Galvanised Steel	
Y	26	STREET LIGHTING	ROBERTS STREET	GRIMSBY	528534.56	409261.79	1991		56185	Urbis	Axia 16 LED 350mA	19 Watts	6.00 Metres	Galvanised Steel	
Y	27	STREET LIGHTING	ROBERTS STREET	GRIMSBY	528544.69	409241.54	1991		56186	Urbis	Axia 16 LED 350mA	19 Watts	6.00 Metres	Galvanised Steel	
Y	28	STREET LIGHTING	ROBERTS STREET	GRIMSBY	528547.1	409213.5	1991		56187	Urbis	Axia 16 LED 350mA	19 Watts	6.00 Metres	Galvanised Steel	
Y	29	STREET LIGHTING	ROBERTS STREET	GRIMSBY	528566.34	409198.89	1991		56188	Urbis	Axia 16 LED 350mA	19 Watts	6.00 Metres	Galvanised Steel	
Y	30	STREET LIGHTING	ROBERTS STREET	GRIMSBY	528575.83	409179.71	1991		56189	Urbis	Axia 16 LED 350mA	19 Watts	6.00 Metres	Galvanised Steel	
Y	31	STREET LIGHTING	ROBERTS STREET	GRIMSBY	528578.87	409150.94	1991		56190	Urbis	Axia 16 LED 350mA	19 Watts	6.00 Metres	Galvanised Steel	
Y	32	STREET LIGHTING	ROBERTS STREET	GRIMSBY	528595.2	409141.7	1991		56191	Urbis	Axia 16 LED 350mA	19 Watts	6.00 Metres	Galvanised Steel	
Y	33	STREET LIGHTING	ROBERTS STREET	GRIMSBY	528595.2	409117.84	1991		56192	Urbis	Axia 16 LED 350mA	19 Watts	6.00 Metres	Galvanised Steel	
Y	34	STREET LIGHTING	ROBERTS STREET	GRIMSBY	528606.21	409096.01	1991		56193	Urbis	Axia 16 LED 350mA	19 Watts	6.00 Metres	Galvanised Steel	
Y	35	STREET LIGHTING	ROBERTS STREET	GRIMSBY	528626.72	409079.05	1991		56194	Urbis	Axia 16 LED 350mA	19 Watts	6.00 Metres	Galvanised Steel	
Y	36	STREET LIGHTING	ROBERTS STREET	GRIMSBY	528637.6	409056.71	1991		56195	Urbis	Axia 16 LED 350mA	19 Watts	6.00 Metres	Galvanised Steel	
Y	37	STREET LIGHTING	ROBERTS STREET	GRIMSBY	528649	409034.4	1991		56196	Urbis	Axia 16 LED 350mA	19 Watts	6.00 Metres	Galvanised Steel	
Y	38	STREET LIGHTING	ROBERTS STREET	GRIMSBY	528648.49	409010.67	1995		56197	Urbis	Axia 16 LED 350mA	19 Watts	6.00 Metres	Galvanised Steel	
Y	1	STREET LIGHTING	VICTOR STREET	GRIMSBY	528203.15	410314.91	1991		59548	1 Urbis LED	Teceo 48 LED 700mA	104 Watts	12.00 Metres	Galvanised Steel	
Y	2	STREET LIGHTING	VICTOR STREET	GRIMSBY	528197.07	410286.15	1995		59549	1 Urbis LED	Teceo 48 LED 700mA	104 Watts	10.00 Metres	Galvanised Steel	
Y	3	STREET LIGHTING	VICTOR STREET	GRIMSBY	528171.96	410256.07	1995		59550	1 Urbis LED	Teceo 48 LED 700mA	104 Watts	10.00 Metres	Galvanised Steel	
Y	4	STREET LIGHTING	VICTOR STREET	GRIMSBY	528175.55	410221.79	1995		59551	1 Urbis LED	Teceo 48 LED 700mA	104 Watts	10.00 Metres	Galvanised Steel	
Y	5	STREET LIGHTING	VICTOR STREET	GRIMSBY	528150.74	410197.11	1995		59552	1 Urbis LED	Teceo 48 LED 700mA	104 Watts	10.00 Metres	Galvanised Steel	
Y	6	STREET LIGHTING	VICTOR STREET	GRIMSBY	528152.86	410157.58	1995		59553	1 Urbis LED	Teceo 48 LED 700mA	104 Watts	10.00 Metres	Galvanised Steel	
Y	7	STREET LIGHTING	VICTOR STREET	GRIMSBY	528124.32	410121.12	1995		59554	1 Urbis LED	Teceo 48 LED 700mA	104 Watts	10.00 Metres	Galvanised Steel	
Y	8	STREET LIGHTING	VICTOR STREET	GRIMSBY	528128.37	410087.71	1995		59555	1 Urbis LED	Teceo 48 LED 700mA	104 Watts	10.00 Metres	Galvanised Steel	
Y	9	STREET LIGHTING	VICTOR STREET	GRIMSBY	528106.28	410076.11	1995		59556	1 Urbis LED	Teceo 48 LED 700mA	104 Watts	10.00 Metres	Galvanised Steel	
Y	10	STREET LIGHTING	VICTOR STREET	GRIMSBY	528114.8	410048.51	2020	23/10/2020	68131	Urbis	Teceo 48 LED 700mA	104 Watts	12.00 Metres	Galvanised Steel	
Y	11	STREET LIGHTING	VICTOR STREET	GRIMSBY	528086.2	410019.95	1995		59558	1 Urbis LED	Teceo 48 LED 700mA	104 Watts	10.00 Metres	Galvanised Steel	
Y	12	STREET LIGHTING	VICTOR STREET	GRIMSBY	528077.54	409994.26	1995		59559	1 Urbis LED	Teceo 48 LED 700mA	104 Watts	10.00 Metres	Galvanised Steel	
Y	13	STREET LIGHTING	VICTOR STREET	GRIMSBY	528082.51	409954.31	1995		59560	1 Urbis LED	Teceo 48 LED 700mA	104 Watts	10.00 Metres	Galvanised Steel	
Y	14	STREET LIGHTING	VICTOR STREET	GRIMSBY	528054.16	409928.44	1995		59561	1 Urbis LED	Teceo 48 LED 700mA	104 Watts	10.00 Metres	Galvanised Steel	
Y	15	STREET LIGHTING	VICTOR STREET	GRIMSBY	528059.32	409888.95	1995		59562	1 Urbis LED	Teceo 48 LED 700mA	104 Watts	10.00 Metres	Galvanised Steel	
Y	16	STREET LIGHTING	VICTOR STREET	GRIMSBY	528026.02	409848.04	1995		59563	1 Urbis LED	Teceo 48 LED 700mA	104 Watts	10.00 Metres	Galvanised Steel	
Y	17	STREET LIGHTING	VICTOR STREET	GRIMSBY	528033.2	409815.27	1995		59564	1 Urbis LED	Teceo 48 LED 700mA	104 Watts	10.00 Metres	Galvanised Steel	
Y	18	STREET LIGHTING	VICTOR STREET	GRIMSBY	528001.36	409778.34	1995		59565	1 Urbis LED	Teceo 48 LED 700mA	104 Watts	10.00 Metres	Galvanised Steel	
Y	19	STREET LIGHTING	VICTOR STREET	GRIMSBY	527989.94	409745.93	1995		59566	1 Urbis LED	Teceo 48 LED 700mA	104 Watts	10.00 Metres	Galvanised Steel	
Y	20	STREET LIGHTING	VICTOR STREET	GRIMSBY	527991.97	409704.78	1995		59567	1 Urbis LED	Teceo 48 LED 700mA	104 Watts	10.00 Metres	Galvanised Steel	
Y	21	STREET LIGHTING	VICTOR STREET	GRIMSBY	527971.76	409683.9	1991		62999	1 Urbis LED	Teceo 48 LED 700mA	104 Watts	10.00 Metres	Galvanised Steel	
Y	1	STREET LIGHTING	FOOTPATH BETWEEN 112 AND 128	GRIMSBY	528015.36	409869.75	1987		48682	1 Urbis LED	Axia 16 LED 500mA	28 Watts	5.00 Metres	Galvanised Steel	
Y	1	STREET LIGHTING	RUTLAND STREET	GRIMSBY	528633.19	410120.15	1989		56424	1 Urbis LED	Axia 16 LED 500mA	28 Watts	6.00 Metres	Galvanised Steel	
Y	2	STREET LIGHTING	RUTLAND STREET	GRIMSBY	528598.63	410055.97	2021	10/12/2021	68782	Urbis	Axia 24 LED 500mA	28 Watts	6.00 Metres	Galvanised Steel	
Y	3	STREET LIGHTING	RUTLAND STREET	GRIMSBY	528582.69	410018.7	1989		56426	1 Urbis LED	Axia 16 LED 500mA	28 Watts	6.00 Metres	Galvanised Steel	
Y	4	STREET LIGHTING	RUTLAND STREET	GRIMSBY	528570.54	409995.98	1989		56427	1 Urbis LED	Axia 16 LED 500mA	28 Watts	6.00 Metres	Galvanised Steel	
Y	5	STREET LIGHTING	RUTLAND STREET	GRIMSBY	528556.23	409968.26	1989		56428	1 Urbis LED	Axia 16 LED 500mA	28 Watts	6.00 Metres	Galvanised Steel	
Y	6	STREET LIGHTING	RUTLAND STREET	GRIMSBY	528537.63	409940.85	1989		56429	1 Urbis LED	Axia 16 LED 500mA	28 Watts	6.00 Metres	Galvanised Steel	
Y	7	STREET LIGHTING	RUTLAND STREET	GRIMSBY	528528.21	409905.63	1989		56430	1 Urbis LED	Axia 16 LED 500mA	28 Watts	6.00 Metres	Galvanised Steel	
Y	8	STREET LIGHTING	RUTLAND STREET	GRIMSBY	528511.5	409886.33	1989		56431	1 Urbis LED	Axia 16 LED 500mA	28 Watts	6.00 Metres	Galvanised Steel	
Y	9	STREET LIGHTING	RUTLAND STREET	GRIMSBY	528504.54	409863.36	1989		56432	1 Urbis LED	Axia 16 LED 500mA	28 Watts	6.00 Metres	Galvanised Steel	
Y	10	STREET LIGHTING	RUTLAND STREET	GRIMSBY	528506.82	409834.5	1989		56433	1 Urbis LED	Axia 16 LED 500mA	28 Watts	6.00 Metres	Galvanised Steel	
Y	11	STREET LIGHTING	RUTLAND STREET	GRIMSBY	528490.11	409813.61	1989		56434	1 Urbis LED	Axia 16 LED 500mA	28 Watts	6.00 Metres	Galvanised Steel	
Y	12	STREET LIGHTING	RUTLAND STREET	GRIMSBY	528490.49	409779.44	1989		56435	1 Urbis LED	Axia 16 LED 500mA	28 Watts	6.00 Metres	Galvanised Steel	
Y	13	STREET LIGHTING	RUTLAND STREET	GRIMSBY	528483.65	409756.21	1989		56436	1 Urbis LED	Axia 16 LED 500mA	28 Watts	6.00 Metres	Galvanised Steel	
Y	14	STREET LIGHTING	RUTLAND STREET	GRIMSBY	528464.29	409729	1989		56437	1 Urbis LED	Axia 16 LED 500mA	28 Watts	6.00 Metres	Galvanised Steel	
Y	15	STREET LIGHTING	RUTLAND STREET	GRIMSBY	528457.33	409706.03	1989		56438	1 Urbis LED	Axia 16 LED 500mA	28 Watts	6.00 Metres	Galvanised Steel	
Y	16	STREET LIGHTING	RUTLAND STREET	GRIMSBY	528459.6	409675.65	1989		56439	1 Urbis LED	Axia 16 LED 500mA	28 Watts	6.00 Metres	Galvanised Steel	

Y	17	STREET LIGHTING	RUTLAND STREET	GRIMSBY	528440.62	409650.52	1989		56440	1 Urbis LED	Axia 16 LED 500mA	28 Watts	6.00 Metres	Galvanised Steel	
Y	18	STREET LIGHTING	RUTLAND STREET	GRIMSBY	528432.01	409623.37	1989		56441	1 Urbis LED	Axia 16 LED 500mA	28 Watts	6.00 Metres	Galvanised Steel	
Y	19	STREET LIGHTING	RUTLAND STREET	GRIMSBY	528434.04	409592.11	1995		56442	1 Urbis LED	Axia 16 LED 500mA	28 Watts	6.00 Metres	Galvanised Steel	
Y	20	STREET LIGHTING	RUTLAND STREET	GRIMSBY	528410.62	409551.35	1989		56443	1 Urbis LED	Axia 16 LED 500mA	28 Watts	6.00 Metres	Galvanised Steel	
Y	21	STREET LIGHTING	RUTLAND STREET	GRIMSBY	528411.89	409519.33	1989		56444	1 Urbis LED	Axia 16 LED 500mA	28 Watts	6.00 Metres	Galvanised Steel	
Y	22	STREET LIGHTING	RUTLAND STREET	GRIMSBY	528403.15	409491.42	1989		56445	1 Urbis LED	Axia 16 LED 500mA	28 Watts	6.00 Metres	Galvanised Steel	
Y	23	STREET LIGHTING	RUTLAND STREET	GRIMSBY	528383.66	409465.91	2012		56446	1 Urbis LED	Axia 16 LED 500mA	28 Watts	8.00 Metres	Galvanised Steel	
Y	1	STREET LIGHTING	STANLEY STREET	GRIMSBY	528501.58	410196.03	1997		58126	1 Urbis LED	Teceo 16 LED 500mA	28 Watts	6.00 Metres	Galvanised Steel	
Y	2	STREET LIGHTING	STANLEY STREET	GRIMSBY	528480.06	410170.52	1997		58127	1 Urbis LED	Teceo 16 LED 500mA	28 Watts	6.00 Metres	Galvanised Steel	
Y	3	STREET LIGHTING	STANLEY STREET	GRIMSBY	528472.97	410145.58	2018	02/08/2018	58153	Urbis	Teceo 16 LED 500mA	28 Watts	6.00 Metres	Galvanised Steel	
Y	4	STREET LIGHTING	STANLEY STREET	GRIMSBY	528456.52	410111.47	2018	02/08/2018	58154	Urbis	Teceo 16 LED 500mA	28 Watts	6.00 Metres	Galvanised Steel	
Y	5	STREET LIGHTING	STANLEY STREET	GRIMSBY	528453.73	410100.33	2018	26/07/2018	58128	Urbis	Teceo 16 LED 500mA	28 Watts	6.00 Metres	Galvanised Steel	
Y	6	STREET LIGHTING	STANLEY STREET	GRIMSBY	528433.61	410073.49	1986		58129	1 Urbis LED	Teceo 16 LED 500mA	28 Watts	5.00 Metres	Galvanised Steel	
Y	7	STREET LIGHTING	STANLEY STREET	GRIMSBY	528418.16	410041.28	1986		58130	1 Urbis LED	Teceo 16 LED 500mA	28 Watts	5.00 Metres	Galvanised Steel	
Y	8	STREET LIGHTING	STANLEY STREET	GRIMSBY	528413.86	410012.54	1986		58131	1 Urbis LED	Teceo 16 LED 500mA	28 Watts	5.00 Metres	Galvanised Steel	
Y	9	STREET LIGHTING	STANLEY STREET	GRIMSBY	528389.56	409981.47	2004		58132	1 Urbis LED	Teceo 16 LED 500mA	28 Watts	6.00 Metres	Stainless Steel	
Y	10	STREET LIGHTING	STANLEY STREET	GRIMSBY	528387.4	409950.71	1986		58133	1 Urbis LED	Teceo 16 LED 500mA	28 Watts	6.00 Metres	Galvanised Steel	
Y	11	STREET LIGHTING	STANLEY STREET	GRIMSBY	528378.29	409920.14	1986		58134	1 Urbis LED	Teceo 16 LED 500mA	28 Watts	6.00 Metres	Galvanised Steel	
Y	12	STREET LIGHTING	STANLEY STREET	GRIMSBY	528362.47	409903.75	1986		58135	1 Urbis LED	Teceo 16 LED 500mA	28 Watts	6.00 Metres	Galvanised Steel	
Y	13	STREET LIGHTING	STANLEY STREET	GRIMSBY	528364.62	409874.51	1986		58136	1 Urbis LED	Teceo 16 LED 500mA	28 Watts	6.00 Metres	Galvanised Steel	
Y	14	STREET LIGHTING	STANLEY STREET	GRIMSBY	528346.77	409850.14	1986		58137	1 Urbis LED	Teceo 16 LED 500mA	28 Watts	6.00 Metres	Galvanised Steel	
Y	15	STREET LIGHTING	STANLEY STREET	GRIMSBY	528339.81	409827.04	1986		58138	1 Urbis LED	Teceo 16 LED 500mA	28 Watts	6.00 Metres	Galvanised Steel	
Y	16	STREET LIGHTING	STANLEY STREET	GRIMSBY	528343.1	409801.09	1986		58139	1 Urbis LED	Teceo 16 LED 500mA	28 Watts	6.00 Metres	Galvanised Steel	
Y	17	STREET LIGHTING	STANLEY STREET	GRIMSBY	528325	409777.1	1986		58140	1 Urbis LED	Teceo 16 LED 500mA	28 Watts	6.00 Metres	Galvanised Steel	
Y	18	STREET LIGHTING	STANLEY STREET	GRIMSBY	528316.39	409747.29	1986		58141	1 Urbis LED	Teceo 16 LED 500mA	28 Watts	6.00 Metres	Galvanised Steel	
Y	19	STREET LIGHTING	STANLEY STREET	GRIMSBY	528320.44	409724.64	1986		58142	1 Urbis LED	Teceo 16 LED 500mA	28 Watts	6.00 Metres	Galvanised Steel	
Y	20	STREET LIGHTING	STANLEY STREET	GRIMSBY	528302.97	409702.04	1986		58143	1 Urbis LED	Teceo 16 LED 500mA	28 Watts	6.00 Metres	Galvanised Steel	
Y	21	STREET LIGHTING	STANLEY STREET	GRIMSBY	528294.74	409675.08	1986		58144	1 Urbis LED	Teceo 16 LED 500mA	28 Watts	6.00 Metres	Galvanised Steel	
Y	22	STREET LIGHTING	STANLEY STREET	GRIMSBY	528295.75	409640.46	1986		58145	1 Urbis LED	Teceo 16 LED 500mA	28 Watts	6.00 Metres	Galvanised Steel	
Y	23	STREET LIGHTING	STANLEY STREET	GRIMSBY	528271.07	409594.83	1986		58146	1 Urbis LED	Teceo 16 LED 500mA	28 Watts	6.00 Metres	Galvanised Steel	
Y	24	STREET LIGHTING	STANLEY STREET	GRIMSBY	528262.08	409565.27	1986		58147	1 Urbis LED	Teceo 16 LED 500mA	28 Watts	6.00 Metres	Galvanised Steel	
Y	25	STREET LIGHTING	STANLEY STREET	GRIMSBY	528252.84	409534.83	1986		58148	1 Urbis LED	Teceo 16 LED 500mA	28 Watts	6.00 Metres	Galvanised Steel	
Y	26	STREET LIGHTING	STANLEY STREET	GRIMSBY	528247.65	409517.07	1986		58149	1 Urbis LED	Teceo 16 LED 500mA	28 Watts	6.00 Metres	Galvanised Steel	
Y	27	STREET LIGHTING	STANLEY STREET	GRIMSBY	528248.66	409480.04	1986		58150	1 Urbis LED	Teceo 16 LED 500mA	28 Watts	6.00 Metres	Galvanised Steel	
Y	28	STREET LIGHTING	STANLEY STREET	GRIMSBY	528229.55	409454.73	1986		58151	1 Urbis LED	Teceo 16 LED 500mA	28 Watts	6.00 Metres	Galvanised Steel	
Y	29	STREET LIGHTING	STANLEY STREET	GRIMSBY	528223.09	409432.64	1986		58152	1 Urbis LED	Teceo 16 LED 500mA	28 Watts	8.00 Metres	Galvanised Steel	
Y	1	STREET LIGHTING	WEELSBY STREET	GRIMSBY	528393.95	410244.55	1983		60034	1 Urbis LED	Axia 16 LED 500mA	28 Watts	5.00 Metres	Galvanised Steel	
Y	2	STREET LIGHTING	WEELSBY STREET	GRIMSBY	528390.4	410211.01	1963		60035	1 Urbis LED	Axia 16 LED 500mA	28 Watts	5.00 Metres	Galvanised Steel	
Y	3	STREET LIGHTING	WEELSBY STREET	GRIMSBY	528363.57	410182.91	1979		60036	1 Urbis LED	Axia 16 LED 500mA	28 Watts	5.00 Metres	Galvanised Steel	
Y	4	STREET LIGHTING	WEELSBY STREET	GRIMSBY	528362.05	410152.46	1988		60037	1 Urbis LED	Axia 16 LED 500mA	28 Watts	5.00 Metres	Galvanised Steel	
Y	5	STREET LIGHTING	WEELSBY STREET	GRIMSBY	528353.19	410133.03	1988		60038	1 Urbis LED	Axia 16 LED 500mA	28 Watts	6.00 Metres	Galvanised Steel	
Y	6	STREET LIGHTING	WEELSBY STREET	GRIMSBY	528331.92	410116.26	1988		60039	1 Urbis LED	Axia 16 LED 500mA	28 Watts	6.00 Metres	Galvanised Steel	
Y	7	STREET LIGHTING	WEELSBY STREET	GRIMSBY	528322.43	410095.44	1988		60040	1 Urbis LED	Axia 16 LED 500mA	28 Watts	6.00 Metres	Galvanised Steel	
Y	8	STREET LIGHTING	WEELSBY STREET	GRIMSBY	528322.3	410069.43	1996		60041	1 Urbis LED	Axia 16 LED 500mA	28 Watts	6.00 Metres	Galvanised Steel	
Y	9	STREET LIGHTING	WEELSBY STREET	GRIMSBY	528301.54	410052.15	1996		60042	1 Urbis LED	Axia 16 LED 500mA	28 Watts	6.00 Metres	Galvanised Steel	
Y	10	STREET LIGHTING	WEELSBY STREET	GRIMSBY	528291.29	410030.69	1996		60043	1 Urbis LED	Axia 16 LED 500mA	28 Watts	6.00 Metres	Galvanised Steel	
Y	11	STREET LIGHTING	WEELSBY STREET	GRIMSBY	528281.42	410009.81	1996		60044	1 Urbis LED	Axia 16 LED 500mA	28 Watts	6.00 Metres	Galvanised Steel	
Y	12	STREET LIGHTING	WEELSBY STREET	GRIMSBY	528245.48	409908.49	1979		60045	1 Urbis LED	Axia 16 LED 500mA	28 Watts	6.00 Metres	Galvanised Steel	
Y	13	STREET LIGHTING	WEELSBY STREET	GRIMSBY	528222.82	409888.18	1979		60046	1 Urbis LED	Axia 16 LED 500mA	28 Watts	6.00 Metres	Galvanised Steel	
Y	14	STREET LIGHTING	WEELSBY STREET	GRIMSBY	528222.44	409860.01	1979		60047	1 Urbis LED	Axia 16 LED 500mA	28 Watts	6.00 Metres	Galvanised Steel	
Y	15	STREET LIGHTING	WEELSBY STREET	GRIMSBY	528200.29	409835.14	1979		60048	1 Urbis LED	Axia 16 LED 500mA	28 Watts	6.00 Metres	Galvanised Steel	
Y	16	STREET LIGHTING	WEELSBY STREET	GRIMSBY	528202.57	409803.49	1979		60049	1 Urbis LED	Axia 16 LED 500mA	28 Watts	6.00 Metres	Galvanised Steel	
Y	17	STREET LIGHTING	WEELSBY STREET	GRIMSBY	528181.3	409776.22	1979		60050	1 Urbis LED	Axia 16 LED 500mA	28 Watts	6.00 Metres	Galvanised Steel	
Y	18	STREET LIGHTING	WEELSBY STREET	GRIMSBY	528172.57	409750.77	1979		60051	1 Urbis LED	Axia 16 LED 500mA	28 Watts	6.00 Metres	Galvanised Steel	
Y	19	STREET LIGHTING	WEELSBY STREET	GRIMSBY	528175.1	409717.1	1988		60052	1 Urbis LED	Axia 16 LED 500mA	28 Watts	6.00 Metres	Galvanised Steel	
Y	20	STREET LIGHTING	WEELSBY STREET	GRIMSBY	528155.1	409695.14	1979		60053	1 Urbis LED	Axia 16 LED 500mA	28 Watts	6.00 Metres	Galvanised Steel	
Y	21	STREET LIGHTING	WEELSBY STREET	GRIMSBY	528157.25	409661.4	1979		60054	1 Urbis LED	Axia 16 LED 500mA	28 Watts	6.00 Metres	Galvanised Steel	
Y	22	STREET LIGHTING	WEELSBY STREET	GRIMSBY	528136.74	409637.1	1988		60055	1 Urbis LED	Axia 16 LED 500mA	28 Watts	6.00 Metres	Galvanised Steel	
Y	23	STREET LIGHTING	WEELSBY STREET	GRIMSBY	528138.21	409605.79	1979		60056	1 Urbis LED	Axia 16 LED 500mA	28 Watts	6.00 Metres	Galvanised Steel	
Y	24	STREET LIGHTING	WEELSBY STREET	GRIMSBY	528132.52	409584.69	2007		60057	1 Urbis LED	Axia 16 LED 500mA	28 Watts	6.00 Metres	Steel	
Y	25	STREET LIGHTING	WEELSBY STREET	GRIMSBY	528110.75	409551.3	1979		60058	1 Urbis LED	Axia 16 LED 500mA	28 Watts	6.00 Metres	Galvanised Steel	
Y	26	STREET LIGHTING	WEELSBY STREET	GRIMSBY	528114.29	409527.56	1979		60059	1 Urbis LED	Axia 16 LED 500mA	28 Watts	6.00 Metres	Galvanised Steel	
Y	27	STREET LIGHTING	WEELSBY STREET	GRIMSBY	528094.93	409505.19	1988		60060	1 Urbis LED	Axia 16 LED 500mA	28 Watts	6.00 Metres	Galvanised Steel	
Y	28	STREET LIGHTING	WEELSBY STREET	GRIMSBY	528083.66	409469.91	1988		60061	1 Urbis LED	Axia 16 LED 500mA	28 Watts	6.00 Metres	Galvanised Steel	
Y	1	STREET LIGHTING	WELLINGTON STREET	GRIMSBY	527515.25	409755.15	1998		60197	1 Urbis LED	Teceo 48 LED 700mA	104 Watts	10.00 Metres	Galvanised Steel	
Y	2	STREET LIGHTING	WELLINGTON STREET	GRIMSBY	527543.73	409750.09	1998		60198	1 Urbis LED	Teceo 48 LED 700mA	104 Watts	10.00 Metres	Galvanised Steel	
Y	3	STREET LIGHTING	WELLINGTON STREET	GRIMSBY	527579.17	409745.41	2000		60199	1 Urbis LED	Teceo 48 LED 700mA	104 Watts	10.00 Metres	Galvanised Steel	
Y	4	STREET LIGHTING	WELLINGTON STREET	GRIMSBY	527654.81	409737.65	2024	30/08/2024	69974	Urbis	Teceo 48 LED 700mA	104 Watts	8.00 Metres	Galvanised Steel	
Y	5	STREET LIGHTING	WELLINGTON STREET	GRIMSBY	527698.16	409730.86	2004		60201	1 Urbis LED	Teceo 48 LED 700mA	104 Watts	8.00 Metres	Stainless Steel	
Y	6	STREET LIGHTING	WELLINGTON STREET	GRIMSBY	527744.37	409724.23	1946		60202	1 Urbis LED	Teceo 48 LED 700mA	104 Watts	8.00 Metres	Steel	
Y	7	STREET LIGHTING	WELLINGTON STREET	GRIMSBY	527785.45	409719.91			69975						
Y	8	STREET LIGHTING	WELLINGTON STREET	GRIMSBY	527815	409713	2001		60204	1 Urbis LED	Teceo 48 LED 700mA	104 Watts	8.00 Metres	Galvanised Steel	
Y	9	STREET LIGHTING	WELLINGTON STREET	GRIMSBY	527851	409718	2001		60205	1 Urbis LED	Teceo 48 LED 500mA	79 Watts	8.00 Metres	Galvanised Steel	
Y	10	STREET LIGHTING	WELLINGTON STREET	GRIMSBY	527870.45	409712.42	1985		60206	1 Urbis LED	Teceo 48 LED 500mA	79 Watts	8.00 Metres	Galvanised Steel	
Y	11	STREET LIGHTING	WELLINGTON STREET	GRIMSBY	527900.9	409693.21	2004		60207	1 Urbis LED	Teceo 48 LED 500mA	79 Watts	8.00 Metres	Stainless Steel	
Y	12	STREET LIGHTING	WELLINGTON STREET	GRIMSBY	527938.76	409690.42	1985		60208	1 Urbis LED	Teceo 48 LED 500mA	79 Watts	10.00 Metres	Galvanised Steel	
Y	13	STREET LIGHTING	WELLINGTON STREET	GRIMSBY	527957.9	409670.45	2003		60209	1 Urbis LED	Teceo 48 LED 700mA	104 Watts	10.00 Metres	Stainless Steel	
Y	14	STREET LIGHTING	WELLINGTON STREET	GRIMSBY	527988.67	409672.52	1985		60210	1 Urbis LED	Teceo 48 LED 500mA	79 Watts	10.00 Metres	Galvanised Steel	
Y	15	STREET LIGHTING	WELLINGTON STREET	GRIMSBY	528020.76	409661.43	1985		60211	1 Urbis LED	Teceo 48 LED 500mA	79 Watts	10.00 Metres	Galvanised Steel	
Y	16	STREET LIGHTING	WELLINGTON STREET	GRIMSBY	528053.16	409650.73	1985		60212	1 Urbis LED	Teceo 48 LED 500mA	79 Watts	10.00 Metres	Galvanised Steel	
Y	17	STREET LIGHTING	WELLINGTON STREET	GRIMSBY	528076.96	409643.32	1985		60213	1 Urbis LED	Teceo 48 LED 500mA	79 Watts	10.00 Metres	Galvanised Steel	
Y	18	STREET LIGHTING	WELLINGTON STREET	GRIMSBY	528104.55	409635.03	1985		60214	1 Urbis LED	Teceo 48 LED 700mA	104 Watts	10.00 Metres	Galvanised Steel	
Y	19	STREET LIGHTING	WELLINGTON STREET	GRIMSBY	528119.23	409617.63	1985		60215	1 Urbis LED	Teceo 48 LED 500mA	79 Watts	10.00 Metres	Galvanised Steel	
Y	20	STREET LIGHTING	WELLINGTON STREET	GRIMSBY	528150.37	409620.98	1985		60216	1 Urbis LED	Teceo 48 LED 700mA	104 Watts	10.00 Metres	Galvanised Steel	
Y	21	STREET LIGHTING	WELLINGTON STREET	GRIMSBY	528169.61	409601.8	1985		60217	1 Urbis LED	Teceo 48 LED 500mA	79 Watts	10.00 Metres	Galvanised Steel	
Y	22	STREET LIGHTING	WELLINGTON STREET	GRIMSBY	528196.95	409593.01	1985		60218	1 Urbis LED	Teceo 48 LED 500mA	79 Watts	10.00 Metres	Galvanised Steel	
Y	23	STREET LIGHTING	WELLINGTON STREET	GRIMSBY	528225.81	409583.83	1985		60219	1 Urbis LED	Teceo 48 LED 500mA	79 Watts	10.00 Metres	Galvanised Steel	
Y	24	STREET LIGHTING	WELLINGTON STREET	GRIMSBY	528253.78	409575.03	1985		60220	1 Urbis LED	Teceo 48 LED 500mA	79 Watts	10.00 Metres	Galvanised Steel	
Y	25	STREET LIGHTING	WELLINGTON STREET	GRIMSBY	528282.9	409578.26	1985		60221	1 Urbis LED	Teceo 48 LED 500mA	79 Watts	10.00 Metres	Galvanised Steel	
Y	26	STREET LIGHTING	WELLINGTON STREET	GRIMSBY	528302.77	409559.46	1985		60222	1 Urbis LED	Teceo 48 LED 500mA	79 Watts	10.00 Metres	Galvanised Steel	
Y	27	STREET LIGHTING	WELLINGTON STREET	GRIMSBY	528343.56	409558.61	1985		60223	1 Urbis LED	Teceo 48 LED 700mA	104 Watts	10.00 Metres	Galvanised Steel	
Y	28	STREET LIGHTING	WELLINGTON STREET	GRIMSBY	528369.89	409537.92	1985		60224	1 Urbis LED	Teceo 48 LED 500mA	79 Watts	10.00 Metres	Galvanised Steel	
Y	29	STREET LIGHTING	WELLINGTON STREET	GRIMSBY	528398.12	409541.53	1985		60225	1 Urbis LED	Teceo 48 LED 500mA	79 Watts	10.00 Metres	Galvanised Steel	
Y	30	STREET LIGHTING	WELLINGTON STREET	GRIMSBY	528421.41	409521.97	1985		60226	1 Urbis LED	Teceo 48 LED 500mA	79 Watts	10.00 Metres	Galvanised Steel	
Y	31	STREET LIGHTING	WELLINGTON STREET	GRIMSBY	528447.36	409513.55	1985		60227	1 Urbis LED	Teceo 48 LED 500mA	79 Watts	10.00 Metres	Galvanised Steel	
Y	32	STREET LIGHTING	WELLINGTON STREET	GRIMSBY	528487.36	409512.98	1985		60228	1 Urbis LED	Teceo 48 LED 500mA	79 Watts	10.00 Metres	Galvanised Steel	
Y	33	STREET LIGHTING	WELLINGTON STREET	GRIMSBY	528513.94	409492.66	1985		60229	1 Urbis LED	Teceo 48 LED 500mA	79 Watts	10.00 Metres	Galvanised Steel	
Y	34	STREET LIGHTING	WELLINGTON STREET	GRIMSBY	528554.57	409491.84	1985		60230	1 Urbis LED	Teceo 48 LED 500mA	79 Watts	10.00 Metres	Galvanised Steel	
Y	35	STREET LIGHTING	WELLINGTON STREET	GRIMSBY	528579.5	409471.27	1985		60231	1 Urbis LED	Teceo 48 LED 500mA	79 Watts	10.00 Metres	Galvanised Steel	
Y	36	STREET LIGHTING	WELLINGTON STREET	GRIMSBY	528611.53	409473.74	1985		60232	1 Urbis LED	Teceo 48 LED 500mA	79 Watts	10.00 Metres	Galvanised Steel	
Y	37	STREET LIGHTING	WELLINGTON STREET	GRIMSBY	528644.18	409450.32	1985		60233	1 Urbis LED	Teceo 48 LED 500mA	79 Watts	10.00 Metres	Galvanised Steel	
Y	38	STREET LIGHTING	WELLINGTON STREET	GRIMSBY	528670.13	409454.94	1985		60234	1 Urbis LED	Teceo 48 LED 500mA	79 Watts	10.00 Metres	Galvanised Steel	
Y	1	STREET LIGHTING	OXFORD STREET	GRIMSBY	527954.32	410098.4	2019	14/06/2019	67498	Urbis	Teceo 48 LED 700mA	104 Watts	8.00 Metres	Galvanised Steel	
Y	2	STREET LIGHTING	OXFORD STREET	GRIMSBY	527987.55	410088.83	2007		54548	1 Urbis LED	Teceo 48 LED 700mA	104 Watts	8.00 Metres	Steel	
Y	3	STREET LIGHTING	OXFORD STREET	GRIMSBY	528027.25	410089.03	2007		54549	1 Urbis LED	Teceo 48 LED 700mA	104 Watts	8.00 Metres	Steel	
Y	4	STREET LIGHTING	OXFORD STREET	GRIMSBY	528062.32	410078.41	2007		54550	1 Urbis LED	Teceo 48 LED 500mA	79 Watts	8.00 Metres	Steel	
Y	5	STREET LIGHTING	OXFORD STREET	GRIMSBY	528094.39	410068.7	2007		54551	1 Urbis LED	Teceo 48 LED 500mA	79 Watts	8.00 Metres	Steel	
Y	6	STREET LIGHTING	OXFORD STREET	GRIMSBY	528123.11	410059.95	2007		54552	1 Urbis LED	Teceo 48 LED 500mA	79 Watts	8.00 Metres	Steel	
Y	7	STREET LIGHTING	OXFORD STREET	GRIMSBY	528152.28	410038.47	2007		54553	1 Urbis LED	Teceo 48 LED 500mA	79 Watts	8.00 Metres	Steel	
Y	8	STREET LIGHTING	OXFORD STREET	GRIMSBY	528181.53	410029.59	2007		54554	1 Urbis LED	Teceo 48 LED 500mA	79 Watts	8.00 Metres	Steel	

Y	9	STREET LIGHTING	OXFORD STREET	GRIMSBY	528219.26	410033.7	2007		54555	1 Urbis LED	Teceo 48 LED 700mA	104 Watts	8.00 Metres	Steel	
Y	10	STREET LIGHTING	OXFORD STREET	GRIMSBY	528241.01	410004.59	2007		54556	1 Urbis LED	Teceo 48 LED 700mA	104 Watts	8.00 Metres	Steel	
Y	11	STREET LIGHTING	OXFORD STREET	GRIMSBY	528271.92	409996.03	2007		54557	1 Urbis LED	Teceo 48 LED 500mA	79 Watts	8.00 Metres	Steel	
Y	12	STREET LIGHTING	OXFORD STREET	GRIMSBY	528302.65	409986.69	2007		54558	1 Urbis LED	Teceo 48 LED 500mA	79 Watts	8.00 Metres	Steel	
Y	13	STREET LIGHTING	OXFORD STREET	GRIMSBY	528335.18	409976.76	2007		54559	1 Urbis LED	Teceo 48 LED 500mA	79 Watts	8.00 Metres	Steel	
Y	14	STREET LIGHTING	OXFORD STREET	GRIMSBY	528368.61	409966.43	2007		54560	1 Urbis LED	Teceo 48 LED 500mA	79 Watts	8.00 Metres	Steel	
Y	15	STREET LIGHTING	OXFORD STREET	GRIMSBY	528396	409958.14	2007		54561	1 Urbis LED	Teceo 48 LED 500mA	79 Watts	8.00 Metres	Steel	
Y	16	STREET LIGHTING	OXFORD STREET	GRIMSBY	528427.59	409959.68	2007		54562	1 Urbis LED	Teceo 48 LED 500mA	79 Watts	8.00 Metres	Steel	
Y	17	STREET LIGHTING	OXFORD STREET	GRIMSBY	528459.53	409949.91	2007		54563	1 Urbis LED	Teceo 48 LED 500mA	79 Watts	8.00 Metres	Steel	
Y	18	STREET LIGHTING	OXFORD STREET	GRIMSBY	528485.18	409942.09	2007		54564	1 Urbis LED	Teceo 48 LED 500mA	79 Watts	8.00 Metres	Steel	
Y	19	STREET LIGHTING	OXFORD STREET	GRIMSBY	528509.99	409922.91	2007		54565	1 Urbis LED	Teceo 48 LED 500mA	79 Watts	8.00 Metres	Steel	
Y	20	STREET LIGHTING	OXFORD STREET	GRIMSBY	528545.42	409923.9	2007		54566	1 Urbis LED	Teceo 48 LED 500mA	79 Watts	8.00 Metres	Steel	
Y	21	STREET LIGHTING	OXFORD STREET	GRIMSBY	528572.72	409903.76	2007		54567	1 Urbis LED	Teceo 48 LED 500mA	79 Watts	8.00 Metres	Steel	
Y	22	STREET LIGHTING	OXFORD STREET	GRIMSBY	528608.97	409904.32	2007		54568	1 Urbis LED	Teceo 48 LED 500mA	79 Watts	8.00 Metres	Steel	
Y	23	STREET LIGHTING	OXFORD STREET	GRIMSBY	528641.94	409894.2	2007		54569	1 Urbis LED	Teceo 48 LED 500mA	79 Watts	8.00 Metres	Steel	
Y	24	STREET LIGHTING	OXFORD STREET	GRIMSBY	528665.72	409875.7	2007		54570	1 Urbis LED	Teceo 48 LED 500mA	79 Watts	8.00 Metres	Steel	
Y	1	STREET LIGHTING	SUFFOLK COURT	GRIMSBY	528178.74	410074.24	2008		58552	1 Urbis LED	Axia 16 LED 500mA	28 Watts	6.00 Metres	Steel	
Y	1	STREET LIGHTING	SURREY COURT	GRIMSBY	528187.88	410100.71	2008		58598	Urbis	Axia 8 LED 350mA	10 Watts	6.00 Metres	Steel	
Y	2	STREET LIGHTING	SURREY COURT	GRIMSBY	528208.82	410093.7	2008		58599	Urbis	Axia 8 LED 350mA	10 Watts	6.00 Metres	Steel	
Y	1	STREET LIGHTING	TOM HAMMOND WAY	GRIMSBY	527928.2	409977.38	1990		59273	Urbis	Axia 16 LED 350mA	19 Watts	5.00 Metres	Galvanised Steel	
Y	2	STREET LIGHTING	TOM HAMMOND WAY	GRIMSBY	527946.68	409970.67	1990		59274	Urbis	Axia 16 LED 350mA	19 Watts	5.00 Metres	Galvanised Steel	
Y	3	STREET LIGHTING	TOM HAMMOND WAY	GRIMSBY	527972.38	409961.24	1990		59275	Urbis	Axia 16 LED 350mA	19 Watts	5.00 Metres	Galvanised Steel	
Y	4	STREET LIGHTING	TOM HAMMOND WAY	GRIMSBY	527996.03	409953.85	2012		59276	Urbis	Axia 16 LED 350mA	19 Watts	6.00 Metres	Steel	
Y	5	STREET LIGHTING	TOM HAMMOND WAY	GRIMSBY	528015.32	409948.29	2012		59277	Urbis	Axia 16 LED 350mA	19 Watts	6.00 Metres	Steel	
Y	6	STREET LIGHTING	TOM HAMMOND WAY	GRIMSBY	528044.4	409954.53	1990		59278	Urbis	Axia 16 LED 350mA	19 Watts	5.00 Metres	Galvanised Steel	
Y	7	STREET LIGHTING	TOM HAMMOND WAY	GRIMSBY	528041.46	409936.33	2004		59279	Urbis	Axia 16 LED 350mA	19 Watts	6.00 Metres	Galvanised Steel	
Y	1	STREET LIGHTING	MARLBOROUGH CLOSE	GRIMSBY	528254.8	410090.57	2023	03/07/2023	69291	Urbis	Teceo 24 LED 500mA	40 Watts	8.00 Metres	Galvanised Steel	
Y	3	STREET LIGHTING	MARLBOROUGH CLOSE	GRIMSBY	528245.85	410041.47	1967		53360	Urbis	Axia 16 LED 350mA	19 Watts	5.00 Metres	Steel	
Y	4	STREET LIGHTING	MARLBOROUGH CLOSE	GRIMSBY	528234.08	410047.55	1967		53361	Urbis	Axia 16 LED 350mA	19 Watts	5.00 Metres	Aluminium	
Y	5	STREET LIGHTING	MARLBOROUGH CLOSE	GRIMSBY	528240.79	410062.68	1967		53362	Urbis	Axia 16 LED 350mA	19 Watts	5.00 Metres	Aluminium	
Y	6	STREET LIGHTING	MARLBOROUGH CLOSE	GRIMSBY	528247.32	410074.05	2011		53363	Urbis	Axia 16 LED 350mA	19 Watts	6.00 Metres	Steel	
Y	7	STREET LIGHTING	MARLBOROUGH CLOSE	GRIMSBY	528252.81	410094.7	2011		53364	Urbis	Axia 16 LED 350mA	19 Watts	6.00 Metres	Steel	
Y	1	STREET LIGHTING	BLUESTONE CLOSE	GRIMSBY	528184.26	409811.44	2001		44258	1 Urbis LED	Axia 16 LED 500mA	28 Watts	6.00 Metres	Galvanised Steel	
Y	2	STREET LIGHTING	BLUESTONE CLOSE	GRIMSBY	528161.83	409815.45	2001		44259	1 Urbis LED	Axia 16 LED 500mA	28 Watts	6.00 Metres	Galvanised Steel	
Y	3	STREET LIGHTING	BLUESTONE CLOSE	GRIMSBY	528140.6	409819.91	2001		44260	1 Urbis LED	Axia 16 LED 500mA	28 Watts	6.00 Metres	Galvanised Steel	
Y	4	STREET LIGHTING	BLUESTONE CLOSE	GRIMSBY	528162.08	409828.52	2001		44261	1 Urbis LED	Axia 16 LED 500mA	28 Watts	6.00 Metres	Galvanised Steel	
Y	1	STREET LIGHTING	WEELSBY STREET NORTH	GRIMSBY	528432.61	410299.55	1993		60062	1 Urbis LED	Teceo 24 LED 500mA	40 Watts	5.00 Metres	Steel	
Y	1	STREET LIGHTING	FOOTPATH BETWEEN CLEETHORPE	GRIMSBY	528665.36	410193.24	1993		48698	Urbis	Axia 16 LED 350mA	19 Watts	5.00 Metres	Galvanised Steel	
Y	2	STREET LIGHTING	FOOTPATH BETWEEN CLEETHORPE	GRIMSBY	528648.07	410172.47	1993		48699	Urbis	Axia 16 LED 350mA	19 Watts	5.00 Metres	Galvanised Steel	
Y	1	STREET LIGHTING	DERBY CLOSE	GRIMSBY	528323	410004	1995		47438	Urbis	Axia 16 LED 350mA	19 Watts	5.00 Metres	Galvanised Steel	
Y	2	STREET LIGHTING	DERBY CLOSE	GRIMSBY	528326	410020	1995		47439	Urbis	Axia 16 LED 350mA	19 Watts	5.00 Metres	Galvanised Steel	
Y	3	STREET LIGHTING	DERBY CLOSE	GRIMSBY	528350	409999	1995		47440	Urbis	Axia 16 LED 350mA	19 Watts	5.00 Metres	Galvanised Steel	
Y	1	STREET LIGHTING	ABBEY WALK	GRIMSBY	526982.14	409286.99	2016		42694	1 Urbis LED	Teceo 24 LED 500mA	40 Watts	6.00 Metres	Galvanised Steel	
Y	2	STREET LIGHTING	ABBEY WALK	GRIMSBY	526996.21	409255.62	2018	01/10/2018	67167	Urbis	Teceo 24 LED 500mA	40 Watts	6.00 Metres	Galvanised Steel	
Y	3	STREET LIGHTING	ABBEY WALK	GRIMSBY	527016.7	409215.78	2015	30/07/2015	42696	1 Urbis LED	Teceo 24 LED 500mA	40 Watts	6.00 Metres	Galvanised Steel	
Y	4	STREET LIGHTING	ABBEY WALK	GRIMSBY	526977.21	409175.02	1979		42697	1 Urbis LED	Teceo 24 LED 500mA	40 Watts	6.00 Metres	Galvanised Steel	
Y	5	STREET LIGHTING	ABBEY WALK	GRIMSBY	526947.16	409164.13	2024	06/08/2024	69958	Urbis	Teceo 24 LED 500mA	40 Watts	6.00 Metres	Galvanised Steel	
Y	1	STREET LIGHTING	BARGATE	GRIMSBY	526503.93	408976.19	1989		43628	1 Urbis LED	Teceo 48 LED 700mA	104 Watts	12.00 Metres	Steel	
Y	2	STREET LIGHTING	BARGATE	GRIMSBY	526481.83	408966.15	1989		43629	1 Urbis LED	Teceo 48 LED 700mA	104 Watts	12.00 Metres	Steel	
Y	3	STREET LIGHTING	BARGATE	GRIMSBY	526487.91	408929.69	1989		43630	1 Urbis LED	Teceo 48 LED 700mA	104 Watts	12.00 Metres	Steel	
Y	4	STREET LIGHTING	BARGATE	GRIMSBY	526464.47	408906.01	2021	08/11/2021	68755	Urbis	Teceo 48 LED 700mA	104 Watts	12.00 Metres	Galvanised Steel	
Y	5	STREET LIGHTING	BARGATE	GRIMSBY	526455.51	408875.38	1989		61459	1 Urbis LED	Teceo 48 LED 700mA	104 Watts	12.00 Metres	Steel	
Y	5	STREET LIGHTING	BARGATE	GRIMSBY	526455.51	408875.38	1989		61991	Holophane		104 Watts	12.00 Metres	Steel	
Y	6	STREET LIGHTING	BARGATE	GRIMSBY	526444.27	408841.22	2004		43631	1 Urbis LED	Teceo 48 LED 700mA	104 Watts	12.00 Metres	Stainless Steel	
Y	7	STREET LIGHTING	BARGATE	GRIMSBY	526438.75	408802.93	1989		43632	1 Urbis LED	Teceo 48 LED 700mA	104 Watts	12.00 Metres	Steel	
Y	8	STREET LIGHTING	BARGATE	GRIMSBY	526440.59	408768.96	1989		43633	1 Urbis LED	Teceo 48 LED 700mA	104 Watts	12.00 Metres	Steel	
Y	9	STREET LIGHTING	BARGATE	GRIMSBY	526444.64	408741.61	1989		43634	1 Urbis LED	Teceo 48 LED 700mA	104 Watts	12.00 Metres	Steel	
Y	10	STREET LIGHTING	BARGATE	GRIMSBY	526462.13	408715.75	1989		43635	1 Urbis LED	Teceo 48 LED 700mA	104 Watts	12.00 Metres	Steel	
Y	11	STREET LIGHTING	BARGATE	GRIMSBY	526457.72	408677.91	1989		43636	1 Urbis LED	Teceo 48 LED 700mA	104 Watts	12.00 Metres	Steel	
Y	12	STREET LIGHTING	BARGATE	GRIMSBY	526462.69	408655.91	1989		43637	1 Urbis LED	Teceo 48 LED 700mA	104 Watts	12.00 Metres	Steel	
Y	13	STREET LIGHTING	BARGATE	GRIMSBY	526479.63	408638.14	1989		43638	1 Urbis LED	Teceo 48 LED 700mA	104 Watts	12.00 Metres	Steel	
Y	14	STREET LIGHTING	BARGATE	GRIMSBY	526474.29	408605.46	1989		43639	1 Urbis LED	Teceo 48 LED 700mA	104 Watts	12.00 Metres	Steel	
Y	15	STREET LIGHTING	BARGATE	GRIMSBY	526498.04	408577.38	1989		43640	1 Urbis LED	Teceo 48 LED 700mA	104 Watts	12.00 Metres	Steel	
Y	16	STREET LIGHTING	BARGATE	GRIMSBY	526492.7	408540.92	1989		43641	1 Urbis LED	Teceo 48 LED 700mA	104 Watts	12.00 Metres	Steel	
Y	17	STREET LIGHTING	BARGATE	GRIMSBY	526497.12	408507.51	1989		43642	1 Urbis LED	Teceo 48 LED 700mA	104 Watts	12.00 Metres	Steel	
Y	18	STREET LIGHTING	BARGATE	GRIMSBY	526514.79	408467.83	1989		43643	1 Urbis LED	Teceo 48 LED 700mA	104 Watts	12.00 Metres	Steel	
Y	19	STREET LIGHTING	BARGATE	GRIMSBY	526498.8	408445.22	1989		43644	1 Urbis LED	Teceo 48 LED 700mA	104 Watts	12.00 Metres	Steel	
Y	20	STREET LIGHTING	BARGATE	GRIMSBY	526517.4	408433.43	1989		43645	1 Urbis LED	Teceo 48 LED 700mA	104 Watts	12.00 Metres	Steel	
Y	21	STREET LIGHTING	BARGATE	GRIMSBY	526503.96	408399.65	1989		43646	1 Urbis LED	Teceo 48 LED 700mA	104 Watts	12.00 Metres	Steel	
Y	22	STREET LIGHTING	BARGATE	GRIMSBY	526510.77	408366.78	1989		43647	1 Urbis LED	Teceo 48 LED 700mA	104 Watts	12.00 Metres	Steel	
Y	23	STREET LIGHTING	BARGATE	GRIMSBY	526531.55	408353.9	1989		43648	1 Urbis LED	Teceo 48 LED 700mA	104 Watts	12.00 Metres	Steel	
Y	24	STREET LIGHTING	BARGATE	GRIMSBY	526522.35	408319.74	1989		43649	1 Urbis LED	Teceo 48 LED 700mA	104 Watts	12.00 Metres	Steel	
Y	25	STREET LIGHTING	BARGATE	GRIMSBY	526546.28	408285.95	1989		43650	1 Urbis LED	Teceo 48 LED 700mA	104 Watts	12.00 Metres	Steel	
Y	26	STREET LIGHTING	BARGATE	GRIMSBY	526539.29	408249.59	1989		43651	1 Urbis LED	Teceo 48 LED 700mA	104 Watts	12.00 Metres	Steel	
Y	27	STREET LIGHTING	BARGATE	GRIMSBY	526564.32	408210.37	1989		43652	1 Urbis LED	Teceo 48 LED 700mA	104 Watts	12.00 Metres	Steel	
Y	28	STREET LIGHTING	BARGATE	GRIMSBY	526556.59	408168.49	1989		43653	1 Urbis LED	Teceo 48 LED 700mA	104 Watts	12.00 Metres	Steel	
Y	29	STREET LIGHTING	BARGATE	GRIMSBY	526578.32	408137.09	1989		43654	1 Urbis LED	Teceo 48 LED 700mA	104 Watts	12.00 Metres	Steel	
Y	30	STREET LIGHTING	BARGATE	GRIMSBY	526579.07	408097.16	1989		43655	1 Urbis LED	Teceo 48 LED 700mA	104 Watts	12.00 Metres	Steel	
Y	31	STREET LIGHTING	BARGATE	GRIMSBY	526555.87	408072.12	1989		43656	1 Urbis LED	Teceo 48 LED 700mA	104 Watts	12.00 Metres	Steel	
Y	32	STREET LIGHTING	BARGATE	GRIMSBY	526580.36	408072.48	1989		43657	1 Urbis LED	Teceo 48 LED 700mA	104 Watts	12.00 Metres	Steel	
Y	33	STREET LIGHTING	BARGATE	GRIMSBY	526580.73	408048.27	1989		43658	1 Urbis LED	Teceo 48 LED 700mA	104 Watts	12.00 Metres	Steel	
Y	34	STREET LIGHTING	BARGATE	GRIMSBY	526576.68	408016.14	2008		61460	1 Urbis LED	Teceo 48 LED 700mA	104 Watts	12.00 Metres	Steel	
Y	34	STREET LIGHTING	BARGATE	GRIMSBY	526576.68	408016.14	2008		61992	1 Urbis LED	Teceo 48 LED 700mA	104 Watts	12.00 Metres	Steel	
Y	34	STREET LIGHTING	BARGATE	GRIMSBY	526576.68	408016.14	2008		63010	1 Urbis LED	Teceo 48 LED 700mA	104 Watts	12.00 Metres	Steel	
Y	35	STREET LIGHTING	BARGATE	GRIMSBY	526559.56	408007.86	1989		43659	1 Urbis LED	Teceo 48 LED 700mA	104 Watts	12.00 Metres	Steel	
Y	35	STREET LIGHTING	BARGATE	GRIMSBY	526559.56	408007.86	1989		63011	1 Urbis LED	Teceo 48 LED 700mA	104 Watts	12.00 Metres	Steel	
Y	35	STREET LIGHTING	BARGATE	GRIMSBY	526559.56	408007.86	1989		63012	1 Urbis LED	Teceo 48 LED 700mA	104 Watts	12.00 Metres	Steel	
Y	36	STREET LIGHTING	BARGATE	GRIMSBY	526578.42	407988.64	1989		43660	1 Urbis LED	Teceo 48 LED 700mA	104 Watts	12.00 Metres	Steel	
Y	37	STREET LIGHTING	BARGATE	GRIMSBY	526557.61	407977.13	1989		43661	1 Urbis LED	Teceo 48 LED 700mA	104 Watts	12.00 Metres	Steel	
Y	38	STREET LIGHTING	BARGATE	GRIMSBY	526567.92	407960.19	1989		43662	1 Urbis LED	Teceo 48 LED 700mA	104 Watts	12.00 Metres	Steel	
Y	39	STREET LIGHTING	BARGATE	GRIMSBY	526546.38	407943.35	1989		43663	1 Urbis LED	Teceo 48 LED 700mA	104 Watts	12.00 Metres	Steel	
Y	40	STREET LIGHTING	BARGATE	GRIMSBY	526561.11	407937.27	1989		43664	1 Urbis LED	Teceo 48 LED 700mA	104 Watts	12.00 Metres	Steel	
Y	41	STREET LIGHTING	BARGATE	GRIMSBY	526534.97	407919.69	1989		43665	1 Urbis LED	Teceo 48 LED 700mA	104 Watts	12.00 Metres	Steel	
Y	42	STREET LIGHTING	BARGATE	GRIMSBY	526540.31	407903.76	1989		43666	1 Urbis LED	Teceo 48 LED 700mA	104 Watts	12.00 Metres	Steel	
Y	43	STREET LIGHTING	BARGATE	GRIMSBY	526513.98	407897.87	1989		43667	1 Urbis LED	Teceo 48 LED 700mA	104 Watts	12.00 Metres	Steel	
Y	44	STREET LIGHTING	BARGATE	GRIMSBY	526521.89	407885.9	1989		43668	1 Urbis LED	Teceo 48 LED 700mA	104 Watts	12.00 Metres	Steel	
Y	45	STREET LIGHTING	BARGATE	GRIMSBY	526499.43	407874.86	1989		43669	1 Urbis LED	Teceo 48 LED 700mA	104 Watts	12.00 Metres	Steel	
Y	46	STREET LIGHTING	BARGATE	GRIMSBY	526483.78	407885.35	1989		43670	1 Urbis LED	Teceo 48 LED 700mA	104 Watts	12.00 Metres	Steel	
Y	1	STREET LIGHTING	THE BEREA	GRIMSBY	526324.22	408198.49	2016		66464	1 Urbis LED	Axia 16 LED 500mA	28 Watts	6.00 Metres	Steel	
Y	2	STREET LIGHTING	THE BEREA	GRIMSBY	526331.09	408169.6	2016		58937	1 Urbis LED	Teceo 24 LED 500mA	40 Watts	6.00 Metres	Galvanised Steel	
Y	1	STREET LIGHTING	BRIGHOWGATE	GRIMSBY					70230						
Y	3	STREET LIGHTING	BRIGHOWGATE	GRIMSBY	526674.75	409035.33	2011	15/09/2011	69764	Urbis	Teceo 48 LED 700mA	104 Watts	8.00 Metres	Galvanised Steel	
Y	5	STREET LIGHTING	BRIGHOWGATE	GRIMSBY	526616.27	408957.1	1996		44694	1 Urbis LED	Teceo 48 LED 700mA	104 Watts	8.00 Metres	Galvanised Steel	
Y	6	STREET LIGHTING	BRIGHOWGATE	GRIMSBY	526602.56	408911.89	2022	10/01/2022	68808	Urbis	Teceo 48 LED 700mA	104 Watts	8.00 Metres	Galvanised Steel	
Y	7	STREET LIGHTING	BRIGHOWGATE	GRIMSBY	526581.02	408873.92	2002		44696	1 Urbis LED	Teceo 48 LED 500mA	79 Watts	8.00 Metres	Stainless Steel	
Y	8	STREET LIGHTING	BRIGHOWGATE	GRIMSBY	526556.62	408852.48	2002		44697	1 Urbis LED	Teceo 48 LED 500mA	79 Watts	8.00 Metres	Stainless Steel	
Y	9	STREET LIGHTING	BRIGHOWGATE	GRIMSBY	526539.61	408821.35	2002		44698	Urbis	AXIA 3.2 32 LED 630 mA	62 Watts	8.00 Metres	Stainless Steel	
Y	10	STREET LIGHTING	BRIGHOWGATE	GRIMSBY	526523.3	408790.34	2002		44699	Urbis	AXIA 3.2 32 LED 630 mA	62 Watts	8.00 Metres	Stainless Steel	
Y	11	STREET LIGHTING	BRIGHOWGATE	GRIMSBY	526505.35	408756.31	2009		44700	Urbis	AXIA 3.2 32 LED 630 mA	62 Watts	8.00 Metres	Steel	
Y	12	STREET LIGHTING	BRIGHOWGATE	GRIMSBY	526493.7	408729.15	2002		44701	Urbis	AXIA 3.2 32 LED 630 mA	62 Watts	8.00 Metres	Stainless Steel	

Y	13	STREET LIGHTING	BRIGHOWGATE	GRIMSBY	526479.74	408701.9	1989		44702	1 Urbis LED	Teceo 48 LED 700mA	104 Watts	12.00 Metres	Galvanised Steel	
Y	1	STREET LIGHTING	THE CRESTA	GRIMSBY	526396.37	408312.88	2003		58962	Urbis	Axia 16 LED 350mA	19 Watts	6.00 Metres	Stainless Steel	
Y	2	STREET LIGHTING	THE CRESTA	GRIMSBY	526395.7	408292	2003		58963	Urbis	Axia 16 LED 350mA	19 Watts	6.00 Metres	Stainless Steel	
Y	3	STREET LIGHTING	THE CRESTA	GRIMSBY	526384.71	408258.33	2003		58964	Urbis	Axia 16 LED 350mA	19 Watts	6.00 Metres	Stainless Steel	
Y	4	STREET LIGHTING	THE CRESTA	GRIMSBY	526369.21	408238.17	2015	30/07/2015	58965	Urbis	Axia 16 LED 350mA	19 Watts	6.00 Metres	Galvanised Steel	
Y	5	STREET LIGHTING	THE CRESTA	GRIMSBY	526341.61	408220	1996		58966	Urbis	Axia 16 LED 350mA	19 Watts	6.00 Metres	Galvanised Steel	
Y	6	STREET LIGHTING	THE CRESTA	GRIMSBY	526308.7	408210.32	2015	30/07/2015	58967	Urbis	Axia 16 LED 350mA	19 Watts	6.00 Metres	Galvanised Steel	
Y	7	STREET LIGHTING	THE CRESTA	GRIMSBY	526270.22	408219.75	2015	30/07/2015	58968	Urbis	Axia 16 LED 350mA	19 Watts	6.00 Metres	Galvanised Steel	
Y	8	STREET LIGHTING	THE CRESTA	GRIMSBY	526236.17	408244.37	2015	30/07/2015	58969	Urbis	Axia 16 LED 350mA	19 Watts	6.00 Metres	Galvanised Steel	
Y	9	STREET LIGHTING	THE CRESTA	GRIMSBY	526227.44	408280.95	2015	30/07/2015	58970	Urbis	Axia 16 LED 350mA	19 Watts	6.00 Metres	Galvanised Steel	
Y	1	STREET LIGHTING	DEANSGATE	GRIMSBY	526507.54	409006.9	1975		47403	1 Urbis LED	Teceo 48 LED 700mA	104 Watts	10.00 Metres	Galvanised Steel	
Y	2	STREET LIGHTING	DEANSGATE	GRIMSBY	526530.83	409013.86	1975		47404	1 Urbis LED	Teceo 48 LED 700mA	104 Watts	10.00 Metres	Galvanised Steel	
Y	3	STREET LIGHTING	DEANSGATE	GRIMSBY	526546.35	409044.19	1975		47405	1 Urbis LED	Teceo 48 LED 700mA	104 Watts	10.00 Metres	Galvanised Steel	
Y	4	STREET LIGHTING	DEANSGATE	GRIMSBY	526544.12	409070.72	1975		47406	1 Urbis LED	Teceo 48 LED 700mA	104 Watts	10.00 Metres	Galvanised Steel	
Y	5	STREET LIGHTING	DEANSGATE	GRIMSBY	526562.78	409118.74	1993		47407	1 Urbis LED	Teceo 48 LED 700mA	104 Watts	10.00 Metres	Steel	
Y	6	STREET LIGHTING	DEANSGATE	GRIMSBY	526563.52	409132.03	1993		61566	1 Urbis LED	Ampera 48 LED 700mA	104 Watts	13.00 Metres	Galvanised Steel	
Y	6	STREET LIGHTING	DEANSGATE	GRIMSBY	526563.52	409132.03	1993		62098	1 Urbis LED	Ampera 48 LED 700mA	104 Watts	13.00 Metres	Galvanised Steel	
Y	1	STREET LIGHTING	MARKET HALL ROOF CARPARK	GRIMSBY	526653	409281	1994		53304	1 Urbis LED	Teceo 16 LED 500mA	28 Watts	4.00 Metres	Galvanised Steel	
Y	2	STREET LIGHTING	MARKET HALL ROOF CARPARK	GRIMSBY	526649	409294	1994		53305	1 Urbis LED	Teceo 16 LED 500mA	28 Watts	4.00 Metres	Galvanised Steel	
Y	3	STREET LIGHTING	MARKET HALL ROOF CARPARK	GRIMSBY	526645	409307	2008		53306	1 Urbis LED	Teceo 16 LED 500mA	28 Watts	4.00 Metres	Galvanised Steel	
Y	4	STREET LIGHTING	MARKET HALL ROOF CARPARK	GRIMSBY	526667	409286	1994		53307	1 Urbis LED	Teceo 16 LED 500mA	28 Watts	4.00 Metres	Galvanised Steel	
Y	5	STREET LIGHTING	MARKET HALL ROOF CARPARK	GRIMSBY	526664	409299	1994		53308	1 Urbis LED	Teceo 16 LED 500mA	28 Watts	4.00 Metres	Galvanised Steel	
Y	6	STREET LIGHTING	MARKET HALL ROOF CARPARK	GRIMSBY	526659	409312	1994		53309	1 Urbis LED	Teceo 16 LED 500mA	28 Watts	4.00 Metres	Galvanised Steel	
Y	7	STREET LIGHTING	MARKET HALL ROOF CARPARK	GRIMSBY	526683	409280	1994		53310	1 Urbis LED	Axia 16 LED 500mA	28 Watts	4.00 Metres	Galvanised Steel	
Y	8	STREET LIGHTING	MARKET HALL ROOF CARPARK	GRIMSBY	526682	409290	1994		53311	1 Urbis LED	Teceo 16 LED 500mA	28 Watts	4.00 Metres	Galvanised Steel	
Y	9	STREET LIGHTING	MARKET HALL ROOF CARPARK	GRIMSBY	526677.2	409303.98	2014		66329	1 Urbis LED	Teceo 16 LED 500mA	28 Watts	4.00 Metres	Galvanised Steel	
Y	10	STREET LIGHTING	MARKET HALL ROOF CARPARK	GRIMSBY	526673	409317	1994		53313	1 Urbis LED	Teceo 16 LED 500mA	28 Watts	4.00 Metres	Galvanised Steel	
Y	11	STREET LIGHTING	MARKET HALL ROOF CARPARK	GRIMSBY	526695	409284	1994		53314	1 Urbis LED	Teceo 16 LED 500mA	28 Watts	4.00 Metres	Galvanised Steel	
Y	12	STREET LIGHTING	MARKET HALL ROOF CARPARK	GRIMSBY	526696	409296	1994		53315	1 Urbis LED	Teceo 16 LED 500mA	28 Watts	4.00 Metres	Galvanised Steel	
Y	13	STREET LIGHTING	MARKET HALL ROOF CARPARK	GRIMSBY	526691	409309	1994		53316	1 Urbis LED	Axia 16 LED 500mA	28 Watts	4.00 Metres	Galvanised Steel	
Y	14	STREET LIGHTING	MARKET HALL ROOF CARPARK	GRIMSBY	526687	409322	1994		53317	1 Urbis LED	Teceo 16 LED 500mA	28 Watts	4.00 Metres	Galvanised Steel	
Y	15	STREET LIGHTING	MARKET HALL ROOF CARPARK	GRIMSBY	526683	409332	1994		53318	1 Urbis LED	Teceo 16 LED 500mA	28 Watts	4.00 Metres	Galvanised Steel	
Y	16	STREET LIGHTING	MARKET HALL ROOF CARPARK	GRIMSBY	526664.97	409342.92	2014		66330	1 Urbis LED	Teceo 16 LED 500mA	28 Watts	4.00 Metres	Galvanised Steel	
Y	17	STREET LIGHTING	MARKET HALL ROOF CARPARK	GRIMSBY	526676	409349	1994		53320	1 Urbis LED	Axia 16 LED 500mA	28 Watts	4.00 Metres	Galvanised Steel	
Y	18	STREET LIGHTING	MARKET HALL ROOF CARPARK	GRIMSBY	526673	409358	1994		53321	1 Urbis LED	Axia 16 LED 500mA	28 Watts	4.00 Metres	Galvanised Steel	
Y	1	STREET LIGHTING	DOUGHTY ROAD	GRIMSBY	527053.9	409304.75	2016		47515	1 Urbis LED	Teceo 48 LED 700mA	104 Watts	10.00 Metres	Galvanised Steel	
Y	2	STREET LIGHTING	DOUGHTY ROAD	GRIMSBY	527035.86	409303.37	2016		47516	1 Urbis LED	Teceo 48 LED 700mA	104 Watts	10.00 Metres	Galvanised Steel	
Y	3	STREET LIGHTING	DOUGHTY ROAD	GRIMSBY	527049.56	409277.42	2024	23/02/2024	69815	Urbis	Teceo 48 LED 500mA	79 Watts	12.00 Metres	Galvanised Steel	
Y	4	STREET LIGHTING	DOUGHTY ROAD	GRIMSBY	527080.15	409234.41			69968						
Y	5	STREET LIGHTING	DOUGHTY ROAD	GRIMSBY	527092.93	409204.69	2009		47519	1 Urbis LED	Teceo 48 LED 500mA	79 Watts	8.00 Metres	Steel	
Y	6	STREET LIGHTING	DOUGHTY ROAD	GRIMSBY	527106.63	409159.44	2009		47520	1 Urbis LED	Teceo 48 LED 500mA	79 Watts	10.00 Metres	Steel	
Y	7	STREET LIGHTING	DOUGHTY ROAD	GRIMSBY	527082.81	409121.97			69967						
Y	8	STREET LIGHTING	DOUGHTY ROAD	GRIMSBY	527085.3	409085.3	2004		47522	1 Urbis LED	Teceo 48 LED 500mA	79 Watts	10.00 Metres	Stainless Steel	
Y	9	STREET LIGHTING	DOUGHTY ROAD	GRIMSBY	527064.55	409032.24	1949		47523	1 Urbis LED	Teceo 48 LED 500mA	79 Watts	8.00 Metres	Galvanised Steel	
Y	10	STREET LIGHTING	DOUGHTY ROAD	GRIMSBY	527056.02	409003.82	2024	23/02/2024	69816	Urbis	Teceo 48 LED 500mA	79 Watts	8.00 Metres	Galvanised Steel	
Y	11	STREET LIGHTING	DOUGHTY ROAD	GRIMSBY	527035.57	408985.86	2003		47525	1 Urbis LED	Teceo 48 LED 500mA	79 Watts	8.00 Metres	Stainless Steel	
Y	12	STREET LIGHTING	DOUGHTY ROAD	GRIMSBY	527010.19	408997.91	2020	16/10/2020	68004	Urbis	AXIA 3.2 32 LED 630 mA	62 Watts	12.00 Metres	Galvanised Steel	
Y	1	STREET LIGHTING	DUCHESS STREET	GRIMSBY	526963.67	409074.59	2005		47570	1 Urbis LED	Axia 16 LED 500mA	28 Watts	6.00 Metres	Stainless Steel	
Y	2	STREET LIGHTING	DUCHESS STREET	GRIMSBY	526940.09	409072.55	1992		47571	1 Urbis LED	Axia 16 LED 500mA	28 Watts	6.00 Metres	Galvanised Steel	
Y	3	STREET LIGHTING	DUCHESS STREET	GRIMSBY			2024	20/09/2024	69982	Urbis	Axia 24 LED 500mA	28 Watts	6.00 Metres	Galvanised Steel	
Y	4	STREET LIGHTING	DUCHESS STREET	GRIMSBY	526888.44	409035.09	1992		47573	1 Urbis LED	Axia 16 LED 500mA	28 Watts	6.00 Metres	Galvanised Steel	
Y	5	STREET LIGHTING	DUCHESS STREET	GRIMSBY	526872.75	409005.79	1992		47574	1 Urbis LED	Axia 16 LED 500mA	28 Watts	6.00 Metres	Galvanised Steel	
Y	6	STREET LIGHTING	DUCHESS STREET	GRIMSBY	526841.88	408995.41	2019	08/10/2019	67635	Urbis	Teceo 16 LED 500mA	28 Watts	6.00 Metres	Galvanised Steel	
Y	1	STREET LIGHTING	EAST ST MARYS GATE	GRIMSBY	526878.37	409298.25	2016	21/01/2016	68910	1 Urbis LED	Teceo 24 LED 500mA	40 Watts	6.00 Metres	Galvanised Steel	
Y	2	STREET LIGHTING	EAST ST MARYS GATE	GRIMSBY	526872.91	409311.82	2016	21/01/2016	68911	1 Urbis LED	Teceo 24 LED 500mA	40 Watts	6.00 Metres	Galvanised Steel	
Y	3	STREET LIGHTING	EAST ST MARYS GATE	GRIMSBY	526875.03	409327.73	2016	21/01/2016	68912	1 Urbis LED	Teceo 24 LED 500mA	40 Watts	6.00 Metres	Galvanised Steel	
Y	1	STREET LIGHTING	GARDEN STREET	GRIMSBY	526978.15	409010.23	1980		49066	1 Urbis LED	Teceo 32 LED 500mA	52 Watts	12.00 Metres	Galvanised Steel	
Y	2	STREET LIGHTING	GARDEN STREET	GRIMSBY	526987.38	409035.06	2019	18/01/2019	67269	Urbis	Teceo 32 LED 500mA	52 Watts	6.00 Metres	Galvanised Steel	
Y	3	STREET LIGHTING	GARDEN STREET	GRIMSBY	526985.16	409059.88	2008		49068	1 Urbis LED	Teceo 32 LED 500mA	52 Watts	8.00 Metres	Steel	
Y	4	STREET LIGHTING	GARDEN STREET	GRIMSBY	526981.32	409097.64	1980		49069	1 Urbis LED	Teceo 32 LED 500mA	52 Watts	6.00 Metres	Galvanised Steel	
Y	5	STREET LIGHTING	GARDEN STREET	GRIMSBY	526963.95	409106.62	1980		49070	1 Urbis LED	Teceo 32 LED 500mA	52 Watts	6.00 Metres	Galvanised Steel	
Y	6	STREET LIGHTING	GARDEN STREET	GRIMSBY	526963.9	409130.06	1980		49071	1 Urbis LED	Teceo 32 LED 500mA	52 Watts	6.00 Metres	Galvanised Steel	
Y	7	STREET LIGHTING	GARDEN STREET	GRIMSBY	526932.89	409152.91	1980		49072	1 Urbis LED	Teceo 32 LED 500mA	52 Watts	6.00 Metres	Galvanised Steel	
Y	8	STREET LIGHTING	GARDEN STREET	GRIMSBY	526919.48	409176.01	1980		49073	1 Urbis LED	Teceo 32 LED 500mA	52 Watts	5.00 Metres	Galvanised Steel	
Y	9	STREET LIGHTING	GARDEN STREET	GRIMSBY	526904.47	409217.46	1980		49074	1 Urbis LED	Teceo 32 LED 500mA	52 Watts	6.00 Metres	Galvanised Steel	
Y	10	STREET LIGHTING	GARDEN STREET	GRIMSBY	526882.26	409250.96	2016		68906	1 Urbis LED	Teceo 24 LED 500mA	40 Watts	6.00 Metres	Galvanised Steel	
Y	1	STREET LIGHTING	FOOTPATH BETWEEN GARDEN	GRIMSBY	526905.76	409161.62	2004		48708	Urbis	Axia 16 LED 350mA	19 Watts	6.00 Metres	Galvanised Steel	
Y	2	STREET LIGHTING	FOOTPATH BETWEEN GARDEN	GRIMSBY	526873.64	409152.88	2004		48709	Urbis	Axia 16 LED 350mA	19 Watts	6.00 Metres	Galvanised Steel	
Y	3	STREET LIGHTING	FOOTPATH BETWEEN GARDEN	GRIMSBY	526851.8	409168.3	2004		48710	Urbis	Axia 16 LED 350mA	19 Watts	6.00 Metres	Galvanised Steel	
Y	4	STREET LIGHTING	FOOTPATH BETWEEN GARDEN	GRIMSBY	526826.88	409169.32	2004		48711	Urbis	Axia 16 LED 350mA	19 Watts	6.00 Metres	Galvanised Steel	
Y	1	STREET LIGHTING	GEORGE STREET	GRIMSBY	526997.65	409332.37	2016	21/02/2016	66972	1 Urbis LED	Teceo 48 LED 700mA	104 Watts	10.00 Metres	Galvanised Steel	
Y	2	STREET LIGHTING	GEORGE STREET	GRIMSBY	526993.51	409358.99	2016	21/02/2016	66973	1 Urbis LED	Teceo 48 LED 700mA	104 Watts	10.00 Metres	Galvanised Steel	
Y	1	STREET LIGHTING	GROSVENOR STREET	GRIMSBY				27/06/2025	70231	Urbis	Teceo 48 LED 500mA	79 Watts	8.00 Metres	Galvanised Steel	
Y	3	STREET LIGHTING	GROSVENOR STREET	GRIMSBY	526536.28	408961.65	1946		49939	1 Urbis LED	Teceo 48 LED 500mA	79 Watts	8.00 Metres	Steel	
Y	4	STREET LIGHTING	GROSVENOR STREET	GRIMSBY	526521.09	408984.62	1975		49940	1 Urbis LED	Teceo 48 LED 500mA	79 Watts	10.00 Metres	Galvanised Steel	
Y	1	STREET LIGHTING	HEREFORD AVENUE	GRIMSBY	526146.49	407916.18	2023	19/12/2023	69768	Urbis	Teceo 32 LED 500mA	52 Watts	6.00 Metres	Galvanised Steel	
Y	2	STREET LIGHTING	HEREFORD AVENUE	GRIMSBY	526142.67	407952.3	2015	30/07/2015	50545	1 Urbis LED	Teceo 32 LED 500mA	52 Watts	6.00 Metres	Galvanised Steel	
Y	3	STREET LIGHTING	HEREFORD AVENUE	GRIMSBY	526122.38	407993.94	2015	30/07/2015	50546	1 Urbis LED	Teceo 32 LED 500mA	52 Watts	6.00 Metres	Galvanised Steel	
Y	4	STREET LIGHTING	HEREFORD AVENUE	GRIMSBY	526118.08	408027.11	1997		50547	1 Urbis LED	Teceo 32 LED 500mA	52 Watts	6.00 Metres	Galvanised Steel	
Y	5	STREET LIGHTING	HEREFORD AVENUE	GRIMSBY	526124.28	408059.13	1997		50548	1 Urbis LED	Teceo 32 LED 500mA	52 Watts	6.00 Metres	Galvanised Steel	
Y	6	STREET LIGHTING	HEREFORD AVENUE	GRIMSBY	526107.95	408097.11	1997		50549	1 Urbis LED	Teceo 32 LED 500mA	52 Watts	6.00 Metres	Galvanised Steel	
Y	7	STREET LIGHTING	HEREFORD AVENUE	GRIMSBY	526113.32	408130.53	1997		50550	1 Urbis LED	Teceo 32 LED 500mA	52 Watts	6.00 Metres	Galvanised Steel	
Y	8	STREET LIGHTING	HEREFORD AVENUE	GRIMSBY	526099.35	408161.41	2015	30/07/2015	50551	1 Urbis LED	Teceo 32 LED 500mA	52 Watts	6.00 Metres	Galvanised Steel	
Y	9	STREET LIGHTING	HEREFORD AVENUE	GRIMSBY	526103.79	408197.87	1997		50552	1 Urbis LED	Teceo 32 LED 500mA	52 Watts	6.00 Metres	Galvanised Steel	
Y	10	STREET LIGHTING	HEREFORD AVENUE	GRIMSBY	526088.71	408228.48	2003		50553	1 Urbis LED	Teceo 32 LED 500mA	52 Watts	6.00 Metres	Stainless Steel	
Y	11	STREET LIGHTING	HEREFORD AVENUE	GRIMSBY	526092.52	408271.52	2003		50554	1 Urbis LED	Teceo 32 LED 500mA	52 Watts	6.00 Metres	Stainless Steel	
Y	1	STREET LIGHTING	MANOR AVENUE	GRIMSBY	526767.28	408868.7	1993		53185	Urbis	Axia 16 LED 350mA	19 Watts	6.00 Metres	Galvanised Steel	
Y	2	STREET LIGHTING	MANOR AVENUE	GRIMSBY	526764.12	408894.52	1993		53186	Urbis	Axia 16 LED 350mA	19 Watts	6.00 Metres	Galvanised Steel	
Y	3	STREET LIGHTING	MANOR AVENUE	GRIMSBY	526737.92	408903.19	1993		53187	Urbis	Axia 16 LED 350mA	19 Watts	6.00 Metres	Galvanised Steel	
Y	4	STREET LIGHTING	MANOR AVENUE	GRIMSBY	526721.33	408917.56	1993		53188	Urbis	Axia 16 LED 350mA	19 Watts	6.00 Metres	Galvanised Steel	
Y	5	STREET LIGHTING	MANOR AVENUE	GRIMSBY	526707.03	408930.28	1993		53189	Urbis	Axia 16 LED 350mA	19 Watts	6.00 Metres	Galvanised Steel	
Y	6	STREET LIGHTING	MANOR AVENUE	GRIMSBY	526729.82	408959.15	1963		53190	Urbis	Axia 16 LED 350mA	19 Watts	5.00 Metres	Steel	
Y	7	STREET LIGHTING	MANOR AVENUE	GRIMSBY	526753.19	408984.94	2003		53191	Urbis	Axia 16 LED 350mA	19 Watts	5.00 Metres	Stainless Steel	
Y	8	STREET LIGHTING	MANOR AVENUE	GRIMSBY	526717.66	408967.12	1993		53192	Urbis	Axia 16 LED 350mA	19 Watts	5.00 Metres	Galvanised Steel	
Y	9	STREET LIGHTING	MANOR AVENUE	GRIMSBY	526697.41	408983.51	1993		53193	Urbis	Axia 16 LED 350mA	19 Watts	5.00 Metres	Galvanised Steel	
Y	10	STREET LIGHTING	MANOR AVENUE	GRIMSBY	526675.64	408997.5	1993		53194	Urbis	Axia 16 LED 350mA	19 Watts	5.00 Metres	Galvanised Steel	
Y	1	STREET LIGHTING	MANOR COURT	GRIMSBY	526704.76	408981.61	1994		53195	Urbis	Axia 16 LED 350mA	19 Watts	5.00 Metres	Galvanised Steel	
Y	2	STREET LIGHTING	MANOR COURT	GRIMSBY	526719.19	409000.41	1994		53196	Urbis	Axia 16 LED 350mA	19 Watts	5.00 Metres	Galvanised Steel	
Y	3	STREET LIGHTING	MANOR COURT	GRIMSBY	526732.48	408977.56	1994		53197	Urbis	Axia 16 LED 350mA	19 Watts	5.00 Metres	Galvanised Steel	
Y	1	STREET LIGHTING	MOSS ROAD	GRIMSBY	527104.81	409107.44	1992		53884	1 Urbis LED	Teceo 24 LED 500mA	40 Watts	8.00 Metres	Galvanised Steel	
Y	2	STREET LIGHTING	MOSS ROAD	GRIMSBY	527132.25	409102.47	1992		53885	1 Urbis LED	Teceo 24 LED 500mA	40 Watts	8.00 Metres	Galvanised Steel	
Y	3	STREET LIGHTING	MOSS ROAD	GRIMSBY	527167.96	409096.49	1992		53886	1 Urbis LED	Teceo 24 LED 500mA	40 Watts	8.00 Metres	Galvanised Steel	
Y	1	STREET LIGHTING	B AND Q ENTRANCE	GRIMSBY	527300.03	409114.42	1998		43565	1 Urbis LED	Teceo 48 LED 700mA	104 Watts	10.00 Metres	Galvanised Steel	
Y	1	STREET LIGHTING	OLD MARKET PLACE	GRIMSBY	526745.51	409216.42	2008		61881	DW Windsor		150 Watts	8.00 Metres	Galvanised Steel	
Y	1	STREET LIGHTING	OLD MARKET PLACE	GRIMSBY	526745.51	409216.42	2008		62413	DW Windsor		150 Watts	8.00 Metres	Galvanised Steel	
Y	2	STREET LIGHTING	OLD MARKET PLACE	GRIMSBY	526737.38	409231.09	2008		61882	DW Windsor		150 Watts	8.00 Metres	Galvanised Steel	
Y	2	STREET LIGHTING	OLD MARKET PLACE	GRIMSBY	526737.38	409231.09	2008		62414	DW Windsor		150 Watts	8.00 Metres	Galvanised Steel	
Y	3	STREET LIGHTING	OLD MARKET PLACE	GRIMSBY	526729.86	409244.01	2008		61883	DW Windsor		150 Watts	8.00 Metres	Galvanised Steel	
Y	3	STREET LIGHTING	OLD MARKET PLACE	GRIMSBY	526729.86	409244.01	2008		62415	DW Windsor		150 Watts	8.00 Metres	Galvanised Steel	
Y	4	STREET LIGHTING	OLD MARKET PLACE	GRIMSBY	526722.12	409263.36	2009		54384	DW Windsor		150 Watts	10.00 Metres	Galvanised Steel	

Y	4	STREET LIGHTING	OLD MARKET PLACE	GRIMSBY	526722.12	409263.36	2009		62416	DW Windsor		150 Watts	10.00 Metres	Galvanised Steel	
Y	4	STREET LIGHTING	OLD MARKET PLACE	GRIMSBY	526722.12	409263.36	2009		62535	DW Windsor		150 Watts	10.00 Metres	Galvanised Steel	
Y	4	STREET LIGHTING	OLD MARKET PLACE	GRIMSBY	526722.12	409263.36	2009		62536	DW Windsor		150 Watts	10.00 Metres	Galvanised Steel	
Y	5	STREET LIGHTING	OLD MARKET PLACE	GRIMSBY	526702.71	409254.1	2008		54385	DW Windsor		150 Watts			
Y	5	STREET LIGHTING	OLD MARKET PLACE	GRIMSBY	526702.71	409254.1	2008		62532	DW Windsor		150 Watts			
Y	6	STREET LIGHTING	OLD MARKET PLACE	GRIMSBY	526709.91	409277.54	2009		54386	DW Windsor		150 Watts	10.00 Metres	Galvanised Steel	
Y	6	STREET LIGHTING	OLD MARKET PLACE	GRIMSBY	526709.91	409277.54	2009		62417	DW Windsor		150 Watts	10.00 Metres	Galvanised Steel	
Y	6	STREET LIGHTING	OLD MARKET PLACE	GRIMSBY	526709.91	409277.54	2009		62533	DW Windsor		150 Watts	10.00 Metres	Galvanised Steel	
Y	6	STREET LIGHTING	OLD MARKET PLACE	GRIMSBY	526709.91	409277.54	2009		62534	DW Windsor		150 Watts	10.00 Metres	Galvanised Steel	
Y	1	STREET LIGHTING	PEPPERCORN WALK	GRIMSBY	527024.04	409016.99	1984		55300	Urbis	Axia 16 LED 350mA	19 Watts	5.00 Metres	Steel	
Y	2	STREET LIGHTING	PEPPERCORN WALK	GRIMSBY	527030.62	409035.03	1984		55301	Urbis	Axia 16 LED 350mA	19 Watts	5.00 Metres	Steel	
Y	3	STREET LIGHTING	PEPPERCORN WALK	GRIMSBY	527050.01	409094.82	1984		55302	Urbis	Axia 16 LED 350mA	19 Watts	5.00 Metres	Steel	
Y	4	STREET LIGHTING	PEPPERCORN WALK	GRIMSBY	527055.83	409115.41	2008		55303	Urbis	Axia 8 LED 350mA	10 Watts	6.00 Metres	Steel	
Y	1	STREET LIGHTING	REGENT GARDENS	GRIMSBY				30/05/2025	70218	Urbis	Axia 16 LED 350mA	19 Watts	6.00 Metres	Galvanised Steel	
Y	2	STREET LIGHTING	REGENT GARDENS	GRIMSBY	526422.82	408377.76	1963		55987	Urbis	Axia 16 LED 350mA	19 Watts	5.00 Metres	Steel	
Y	3	STREET LIGHTING	REGENT GARDENS	GRIMSBY	526407.5	408415.86	1963		55988	Urbis	Axia 16 LED 350mA	19 Watts	5.00 Metres	Steel	
Y	4	STREET LIGHTING	REGENT GARDENS	GRIMSBY	526369.77	408400.85	2021	06/09/2021	68603	Urbis	Axia 8 LED 350mA	10 Watts	6.00 Metres	Steel	
Y	5	STREET LIGHTING	REGENT GARDENS	GRIMSBY	526377.12	408408.39	1963		55990	Urbis	Axia 16 LED 350mA	19 Watts	5.00 Metres	Steel	
Y	6	STREET LIGHTING	REGENT GARDENS	GRIMSBY	526376.74	408430.86	1963		55991	Urbis	Axia 16 LED 350mA	19 Watts	5.00 Metres	Steel	
Y	7	STREET LIGHTING	REGENT GARDENS	GRIMSBY	526350.42	408420.04	1963		55992	Urbis	Axia 8 LED 350mA	10 Watts	5.00 Metres	Steel	
Y	1	STREET LIGHTING	FOOTPATH BETWEEN ROUNDWAY	GRIMSBY	526488.18	408204.06	2013		48777	Urbis	Axia 16 LED 350mA	19 Watts	6.00 Metres	Steel	
Y	2	STREET LIGHTING	FOOTPATH BETWEEN ROUNDWAY	GRIMSBY	526523.63	408215.26	2013		48778	Urbis	Axia 8 LED 350mA	10 Watts	6.00 Metres	Steel	
Y	1	STREET LIGHTING	ROUNDWAY	GRIMSBY	526408.22	408274.89	2016	14/04/2016	68799	1 Urbis LED	Teceo 16 LED 500mA	28 Watts	6.00 Metres	Galvanised Steel	
Y	2	STREET LIGHTING	ROUNDWAY	GRIMSBY	526428.25	408267.98	2016	14/04/2016	56329	1 Urbis LED	Teceo 16 LED 500mA	28 Watts	6.00 Metres	Galvanised Steel	
Y	3	STREET LIGHTING	ROUNDWAY	GRIMSBY	526462.3	408250.33	2016	14/04/2016	56330	1 Urbis LED	Teceo 16 LED 500mA	28 Watts	6.00 Metres	Galvanised Steel	
Y	4	STREET LIGHTING	ROUNDWAY	GRIMSBY	526469.89	408208.81	2016	14/04/2016	56331	1 Urbis LED	Teceo 16 LED 500mA	28 Watts	6.00 Metres	Galvanised Steel	
Y	5	STREET LIGHTING	ROUNDWAY	GRIMSBY	526464	408185	2001		56332	1 Urbis LED	Teceo 16 LED 500mA	28 Watts	6.00 Metres	Galvanised Steel	
Y	6	STREET LIGHTING	ROUNDWAY	GRIMSBY	526431	408191	2001		56333	1 Urbis LED	Teceo 16 LED 500mA	28 Watts	6.00 Metres	Galvanised Steel	
Y	7	STREET LIGHTING	ROUNDWAY	GRIMSBY	526407	408179	2001		56334	1 Urbis LED	Teceo 16 LED 500mA	28 Watts	6.00 Metres	Galvanised Steel	
Y	8	STREET LIGHTING	ROUNDWAY	GRIMSBY	526386	408200	2001		56335	1 Urbis LED	Teceo 16 LED 500mA	28 Watts	6.00 Metres	Galvanised Steel	
Y	9	STREET LIGHTING	ROUNDWAY	GRIMSBY	526374	408228	2001		56336	1 Urbis LED	Teceo 16 LED 500mA	28 Watts	6.00 Metres	Galvanised Steel	
Y	1	STREET LIGHTING	RAILWAY TERRACE	GRIMSBY	526939.6	409119.84	2015	30/07/2015	55908	1 Urbis LED	Axia 16 LED 500mA	28 Watts	6.00 Metres	Galvanised Steel	
Y	2	STREET LIGHTING	RAILWAY TERRACE	GRIMSBY	526920.72	409096.86	2019	08/10/2019	67634	Urbis	Axia 16 LED 500mA	28 Watts	6.00 Metres	Galvanised Steel	
Y	3	STREET LIGHTING	RAILWAY TERRACE	GRIMSBY	526897.83	409082	1992		55910	1 Urbis LED	Axia 16 LED 500mA	28 Watts	6.00 Metres	Galvanised Steel	
Y	1	STREET LIGHTING	PHOENIX STREET	GRIMSBY	527002.77	409029.14	1968		55421	1 Urbis LED	Axia 16 LED 500mA	28 Watts	5.00 Metres	Steel	
Y	1	STREET LIGHTING	WELLOWGATE	GRIMSBY	526678.28	409128.76	1992		60236	1 Urbis LED	Teceo 48 LED 500mA	79 Watts	6.00 Metres	Steel	
Y	2	STREET LIGHTING	WELLOWGATE	GRIMSBY	526701.95	409117.43	1992		60237	1 Urbis LED	Teceo 48 LED 500mA	79 Watts	10.00 Metres	Galvanised Steel	
Y	3	STREET LIGHTING	WELLOWGATE	GRIMSBY	526727.27	409095.09	1992		60238	1 Urbis LED	Teceo 48 LED 500mA	79 Watts	10.00 Metres	Galvanised Steel	
Y	4	STREET LIGHTING	WELLOWGATE	GRIMSBY	526742.58	409067.37	1992		60239	1 Urbis LED	Teceo 48 LED 500mA	79 Watts	8.00 Metres	Galvanised Steel	
Y	5	STREET LIGHTING	WELLOWGATE	GRIMSBY	526781.06	409046.04	2014		60240	1 Urbis LED	Teceo 48 LED 500mA	79 Watts	8.00 Metres	Galvanised Steel	
Y	6	STREET LIGHTING	WELLOWGATE	GRIMSBY	526810.51	409017.6	1992		60241	1 Urbis LED	Teceo 48 LED 500mA	79 Watts	8.00 Metres	Galvanised Steel	
Y	7	STREET LIGHTING	WELLOWGATE	GRIMSBY	526833.8	408990.61	1992		60242	1 Urbis LED	Teceo 48 LED 500mA	79 Watts	10.00 Metres	Steel	
Y	8	STREET LIGHTING	WELLOWGATE	GRIMSBY	526851.42	408954.74	1957		60243	1 Urbis LED	Teceo 48 LED 500mA	79 Watts	8.00 Metres	Steel	
Y	9	STREET LIGHTING	WELLOWGATE	GRIMSBY	526896.31	408918.45	1957		60244	1 Urbis LED	Teceo 48 LED 500mA	79 Watts	8.00 Metres	Steel	
Y	10	STREET LIGHTING	WELLOWGATE	GRIMSBY	526909.85	408894.34	2012		60245	Urbis	AXIA 3.2 24 LED 540mA	41 Watts	6.00 Metres	Steel	
Y	11	STREET LIGHTING	WELLOWGATE	GRIMSBY	526921.32	408857.77	2004		60246	1 Urbis LED	Teceo 32 LED 500mA	52 Watts	6.00 Metres	Stainless Steel	
Y	12	STREET LIGHTING	WELLOWGATE	GRIMSBY	526937.91	408831.28	2004		60247	Urbis	AXIA 3.2 24 LED 540mA	41 Watts	6.00 Metres	Stainless Steel	
Y	1	STREET LIGHTING	WESTLANDS AVENUE	GRIMSBY	526480.55	408518.6	2015	30/07/2015	60547	Urbis	Axia 16 LED 350mA	19 Watts	6.00 Metres	Galvanised Steel	
Y	2	STREET LIGHTING	WESTLANDS AVENUE	GRIMSBY	526449.79	408514.1	2015	30/07/2015	60548	Urbis	Axia 16 LED 350mA	19 Watts	6.00 Metres	Galvanised Steel	
Y	3	STREET LIGHTING	WESTLANDS AVENUE	GRIMSBY	526407.39	408514.8	2015	30/07/2015	60549	Urbis	Axia 16 LED 350mA	19 Watts	6.00 Metres	Galvanised Steel	
Y	4	STREET LIGHTING	WESTLANDS AVENUE	GRIMSBY	526368.91	408501.57	2015	30/07/2015	60550	Urbis	Axia 16 LED 350mA	19 Watts	6.00 Metres	Galvanised Steel	
Y	5	STREET LIGHTING	WESTLANDS AVENUE	GRIMSBY	526325.75	408501.95	2015	30/07/2015	60551	Urbis	Axia 16 LED 350mA	19 Watts	6.00 Metres	Galvanised Steel	
Y	6	STREET LIGHTING	WESTLANDS AVENUE	GRIMSBY	526311.45	408491.76	2015	30/07/2015	60552	Urbis	Axia 16 LED 350mA	19 Watts	6.00 Metres	Galvanised Steel	
Y	7	STREET LIGHTING	WESTLANDS AVENUE	GRIMSBY	526283.2	408492.13	2012		60553	Urbis	Axia 16 LED 350mA	19 Watts	6.00 Metres	Steel	
Y	1	STREET LIGHTING	WEST ST MARYS GATE	GRIMSBY	526801.35	409248.11	2016	21/01/2016	68913	1 Urbis LED	Teceo 24 LED 500mA	40 Watts	6.00 Metres	Galvanised Steel	
Y	2	STREET LIGHTING	WEST ST MARYS GATE	GRIMSBY	526802.03	409265.3	2016	21/01/2016	68914	1 Urbis LED	Teceo 24 LED 500mA	40 Watts	6.00 Metres	Galvanised Steel	
Y	3	STREET LIGHTING	WEST ST MARYS GATE	GRIMSBY	526783.99	409283.17	2016	21/01/2016	68915	1 Urbis LED	Teceo 24 LED 500mA	40 Watts	6.00 Metres	Galvanised Steel	
Y	4	STREET LIGHTING	WEST ST MARYS GATE	GRIMSBY	526784.83	409306.94	2016	21/01/2016	68916	1 Urbis LED	Teceo 24 LED 500mA	40 Watts	6.00 Metres	Galvanised Steel	
Y	5	STREET LIGHTING	WEST ST MARYS GATE	GRIMSBY	526780.79	409244.9	2016	21/01/2016	68917	1 Urbis LED	Teceo 24 LED 500mA	40 Watts	6.00 Metres	Galvanised Steel	
Y	6	STREET LIGHTING	WEST ST MARYS GATE	GRIMSBY	526758.15	409238.92	1991		60326	1 Urbis LED	Teceo 24 LED 500mA	40 Watts	6.00 Metres	Steel	
Y	1	STREET LIGHTING	WESTWARD CLOSE	GRIMSBY	526149.36	408275.99	1989		60580	Urbis	Axia 16 LED 350mA	19 Watts	6.00 Metres	Galvanised Steel	
Y	2	STREET LIGHTING	WESTWARD CLOSE	GRIMSBY	526159.74	408254.41	1963		60581	Urbis	Axia 16 LED 350mA	19 Watts	5.00 Metres	Steel	
Y	3	STREET LIGHTING	WESTWARD CLOSE	GRIMSBY	526190.69	408230.94	2022	14/02/2022	68809	Urbis	Axia 16 LED 350mA	19 Watts	6.00 Metres	Galvanised Steel	
Y	1	STREET LIGHTING	VICTORIA STREET SOUTH	GRIMSBY	527150.74	409452.31	1991		59588	1 Urbis LED	Teceo 48 LED 700mA	104 Watts	12.00 Metres	Galvanised Steel	
Y	2	STREET LIGHTING	VICTORIA STREET SOUTH	GRIMSBY	527168.41	409482.6	1991		59589	1 Urbis LED	Teceo 48 LED 700mA	104 Watts	12.00 Metres	Galvanised Steel	
Y	3	STREET LIGHTING	VICTORIA STREET SOUTH	GRIMSBY	527181.12	409512.15	1991		59590	1 Urbis LED	Teceo 48 LED 700mA	104 Watts	12.00 Metres	Galvanised Steel	
Y	4	STREET LIGHTING	VICTORIA STREET SOUTH	GRIMSBY	527189.4	409535.72	1991		59591	1 Urbis LED	Teceo 48 LED 700mA	104 Watts	12.00 Metres	Galvanised Steel	
Y	5	STREET LIGHTING	VICTORIA STREET SOUTH	GRIMSBY	527190.33	409580.67	1991		59592	1 Urbis LED	Teceo 48 LED 700mA	104 Watts	12.00 Metres	Galvanised Steel	
Y	6	STREET LIGHTING	VICTORIA STREET SOUTH	GRIMSBY	527192.49	409606.56	1991		59593	1 Urbis LED	Teceo 48 LED 700mA	104 Watts	12.00 Metres	Galvanised Steel	
Y	7	STREET LIGHTING	VICTORIA STREET SOUTH	GRIMSBY	527169.07	409601.69	1991		59594	1 Urbis LED	Teceo 48 LED 700mA	104 Watts	12.00 Metres	Galvanised Steel	
Y	8	STREET LIGHTING	VICTORIA STREET SOUTH	GRIMSBY	527182.46	409648.97	1991		59595	1 Urbis LED	Teceo 48 LED 700mA	104 Watts	12.00 Metres	Galvanised Steel	
Y	9	STREET LIGHTING	VICTORIA STREET SOUTH	GRIMSBY	527158.59	409645.1	1991		59596	1 Urbis LED	Teceo 48 LED 700mA	104 Watts	12.00 Metres	Galvanised Steel	
Y	10	STREET LIGHTING	VICTORIA STREET SOUTH	GRIMSBY	527171.73	409694.8	1991		59597	1 Urbis LED	Teceo 48 LED 700mA	104 Watts	12.00 Metres	Galvanised Steel	
Y	11	STREET LIGHTING	VICTORIA STREET SOUTH	GRIMSBY	527153.91	409690.75	1991		59598	Urbis	Ampera 48 LED 700mA	104 Watts	12.00 Metres	Galvanised Steel	
Y	12	STREET LIGHTING	VICTORIA STREET SOUTH	GRIMSBY	527146.01	409727.03	1991		59599	1 Urbis LED	Teceo 48 LED 700mA	104 Watts	12.00 Metres	Galvanised Steel	
Y	13	STREET LIGHTING	VICTORIA STREET SOUTH	GRIMSBY	527161.25	409759.79	1991		59600	1 Urbis LED	Teceo 48 LED 700mA	104 Watts	12.00 Metres	Galvanised Steel	
Y	14	STREET LIGHTING	VICTORIA STREET SOUTH	GRIMSBY	527161.46	409794.93	1991		59601	1 Urbis LED	Teceo 48 LED 700mA	104 Watts	12.00 Metres	Galvanised Steel	
Y	15	STREET LIGHTING	VICTORIA STREET SOUTH	GRIMSBY	527145.25	409829.66	1991		59602	1 Urbis LED	Teceo 48 LED 700mA	104 Watts	12.00 Metres	Galvanised Steel	
Y	16	STREET LIGHTING	VICTORIA STREET SOUTH	GRIMSBY	527147.24	409852.86	2005		59603	1 Urbis LED	Teceo 48 LED 700mA	104 Watts	12.00 Metres	Stainless Steel	
Y	17	STREET LIGHTING	VICTORIA STREET SOUTH	GRIMSBY	527172.33	409892.61	2004		59604	1 Urbis LED	Teceo 48 LED 700mA	104 Watts	12.00 Metres	Stainless Steel	
Y	18	STREET LIGHTING	VICTORIA STREET SOUTH	GRIMSBY	527153.02	409908.95	2004		59605	1 Urbis LED	Teceo 48 LED 700mA	104 Watts	12.00 Metres	Stainless Steel	
Y	19	STREET LIGHTING	VICTORIA STREET SOUTH	GRIMSBY	527145.46	409917.46	1991		59606	1 Urbis LED	Teceo 48 LED 700mA	104 Watts	12.00 Metres	Galvanised Steel	
Y	4	STREET LIGHTING	BETHLEHEM STREET	GRIMSBY	526668.8	409147.63	2016	21/02/2016	44098	1 Urbis LED	Teceo 48 LED 700mA	104 Watts	10.00 Metres	Galvanised Steel	
Y	5	STREET LIGHTING	BETHLEHEM STREET	GRIMSBY	526699.68	409159.84	2016	21/02/2016	44099	1 Urbis LED	Teceo 48 LED 700mA	104 Watts	10.00 Metres	Galvanised Steel	
Y	6	STREET LIGHTING	BETHLEHEM STREET	GRIMSBY	526732.84	409182.88	2016	21/02/2016	44100	1 Urbis LED	Teceo 48 LED 700mA	104 Watts	10.00 Metres	Galvanised Steel	
Y	7	STREET LIGHTING	BETHLEHEM STREET	GRIMSBY	526742.41	409200.32	2014	07/02/2014	44101	1 Urbis LED	Teceo 48 LED 700mA	104 Watts	10.00 Metres	Galvanised Steel	
Y	8	STREET LIGHTING	BETHLEHEM STREET	GRIMSBY	526762.41	409194.69	2014	07/02/2014	44102	1 Urbis LED	Teceo 48 LED 700mA	104 Watts	10.00 Metres	Galvanised Steel	
Y	9	STREET LIGHTING	BETHLEHEM STREET	GRIMSBY	526771.93	409215.45	2016	21/01/2016	44103	1 Urbis LED	Teceo 48 LED 700mA	104 Watts	10.00 Metres	Galvanised Steel	
Y	10	STREET LIGHTING	BETHLEHEM STREET	GRIMSBY	526792.03	409228.74	2016	21/01/2016	44104	1 Urbis LED	Teceo 48 LED 700mA	104 Watts	10.00 Metres	Galvanised Steel	
Y	14	STREET LIGHTING	OSBORNE STREET	GRIMSBY	526889.4	409272.6	2016	21/02/2016	54495	Urbis	Teceo 48 LED 700mA	104 Watts	10.00 Metres	Galvanised Steel	
Y	15	STREET LIGHTING	OSBORNE STREET	GRIMSBY	526919.7	409289.3	2016	21/02/2016	54496	Urbis	Teceo 48 LED 700mA	104 Watts	10.00 Metres	Galvanised Steel	
Y	16	STREET LIGHTING	OSBORNE STREET	GRIMSBY	526952.27	409301.37	2016	21/02/2016	54497	Urbis	Teceo 48 LED 700mA	104 Watts	10.00 Metres	Galvanised Steel	
Y	17	STREET LIGHTING	OSBORNE STREET	GRIMSBY	526974.12	409309.75	2016	21/02/2016	54498	Urbis	Teceo 48 LED 700mA	104 Watts	10.00 Metres	Galvanised Steel	
Y	18	STREET LIGHTING	OSBORNE STREET	GRIMSBY	527009.21	409313.45	2016	21/02/2016	69422	Urbis	Teceo 48 LED 700mA	104 Watts	10.00 Metres	Galvanised Steel	
Y	19	STREET LIGHTING	OSBORNE STREET	GRIMSBY	527037.69	409333.19	2016	21/02/2016	69423	Urbis	Teceo 48 LED 700mA	104 Watts	10.00 Metres	Galvanised Steel	
Y	11	STREET LIGHTING	SOUTH ST MARYS GATE	GRIMSBY	526818.65	409231.68	2016	21/02/2016	68456	1 Urbis LED	Teceo 48 LED 700mA	104 Watts	10.00 Metres	Galvanised Steel	
Y	12	STREET LIGHTING	SOUTH ST MARYS GATE	GRIMSBY	526841.27	409261.75	2016	21/02/2016	68457	1 Urbis LED	Teceo 48 LED 700mA	104 Watts	10.00 Metres	Galvanised Steel	
Y	13	STREET LIGHTING	SOUTH ST MARYS GATE	GRIMSBY	526855.99	409272.66	2016	21/02/2016	68458	1 Urbis LED	Teceo 48 LED 700mA	104 Watts	10.00 Metres	Galvanised Steel	
Y	1	STREET LIGHTING	BROWNS ORCHARD	GRIMSBY	526561.96	408873.68	1991		44878	GoodLight	30 LED Bulb	30 Watts	6.00 Metres	Unknown	
Y	2	STREET LIGHTING	BROWNS ORCHARD	GRIMSBY	526544.11	408872.61	1991		44879	GoodLight	30 LED Bulb	30 Watts	5.00 Metres	Unknown	
Y	3	STREET LIGHTING	BROWNS ORCHARD	GRIMSBY	526529.56	408879.44	1991		44880	GoodLight	30 LED Bulb	30 Watts	6.00 Metres	Unknown	
Y	1	STREET LIGHTING	CHURCH LANE	GRIMSBY	526588.91	409120.15	2016	21/02/2016	69761	1 Urbis LED	Teceo 48 LED 700mA	104 Watts	10.00 Metres	Galvanised Steel	
Y	2	STREET LIGHTING	CHURCH LANE	GRIMSBY	526617.05	409113.76	2016	21/02/2016	69762	1 Urbis LED	Teceo 48 LED 700mA	104 Watts	10.00 Metres	Galvanised Steel	
Y	3	STREET LIGHTING	CHURCH LANE	GRIMSBY	526648.92	409120.48	2016	21/02/2016	69763	1 Urbis LED	Teceo 48 LED 700mA	104 Watts	10.00 Metres	Galvanised Steel	
Y	1	STREET LIGHTING	TOWN HALL STREET	GRIMSBY	527101.56	409397.67	2016	26/09/2016	68907	1 Urbis LED	Teceo 48 LED 700mA	104 Watts	10.00 Metres	Galvanised Steel	
Y	2	STREET LIGHTING	TOWN HALL STREET	GRIMSBY	527105.89	409367.33	2016	26/09/2016	68908	1 Urbis LED	Teceo 48 LED 700mA	104 Watts	10.00 Metres	Galvanised Steel	
Y	3	STREET LIGHTING	TOWN HALL STREET	GRIMSBY	527110.84	409342.14	2016	26/09/2016	68909	1 Urbis LED	Teceo 48 LED 700mA	104 Watts	10.00 Metres	Galvanised Steel	
Y	1	STREET LIGHTING	KEIR HARDIE WALK	GRIMSBY	526990.74	409107.62	2008		51490	Urbis	Axia 8 LED 350mA	10 Watts	6.00 Metres	Steel	
Y	2	STREET LIGHTING	KEIR HARDIE WALK	GRIMSBY	527014.27	409109.78	2008		51491	Urbis	Axia 8 LED 350mA	10 Watts	6.00 Metres	Steel	
Y	3	STREET LIGHTING	KEIR HARDIE WALK	GRIMSBY	527020.41	409122.69	2008		51492	Urbis	Axia 8 LED 350mA	10 Watts	6.00 Metres	Steel	

Y	4	STREET LIGHTING	KEIR HARDIE WALK	GRIMSBY	527037.9	409116.19	2008		51493	Urbis	Axia 8 LED 350mA	10 Watts	6.00 Metres	Steel	
Y	5	STREET LIGHTING	KEIR HARDIE WALK	GRIMSBY	527015.42	409095.33	2008		51494	Urbis	Axia 8 LED 350mA	10 Watts	6.00 Metres	Steel	
Y	6	STREET LIGHTING	KEIR HARDIE WALK	GRIMSBY	527014.18	409078.89	2008		51495	Urbis	Axia 8 LED 350mA	10 Watts	6.00 Metres	Steel	
Y	7	STREET LIGHTING	KEIR HARDIE WALK	GRIMSBY	527028.96	409073.43	2008		51496	Urbis	Axia 16 LED 350mA	19 Watts	6.00 Metres	Steel	
Y	8	STREET LIGHTING	KEIR HARDIE WALK	GRIMSBY	527010.9	409062.68	2008		51497	Urbis	Axia 8 LED 350mA	10 Watts	6.00 Metres	Steel	
Y	9	STREET LIGHTING	KEIR HARDIE WALK	GRIMSBY	527000.41	409052.25	2008		51498	1 Urbis LED	Teceo 24 LED 500mA	40 Watts	6.00 Metres	Steel	
Y	10	STREET LIGHTING	KEIR HARDIE WALK	GRIMSBY	526994.87	409074.07	1998		66469	Urbis	Axia 16 LED 350mA	19 Watts	6.00 Metres	Galvanised Steel	
Y	1	STREET LIGHTING	FREDERICK WARD WAY	GRIMSBY	526557.87	409151.08	1993		48958	1 Urbis LED	Teceo 48 LED 700mA	104 Watts	12.00 Metres	Steel	
Y	2	STREET LIGHTING	FREDERICK WARD WAY	GRIMSBY	526568.13	409188.86	1988		48959	1 Urbis LED	Teceo 48 LED 700mA	104 Watts	12.00 Metres	Steel	
Y	3	STREET LIGHTING	FREDERICK WARD WAY	GRIMSBY	526560.03	409209.05	1988		61587	1 Urbis LED	Teceo 48 LED 700mA	104 Watts	12.00 Metres	Steel	
Y	3	STREET LIGHTING	FREDERICK WARD WAY	GRIMSBY	526560.03	409209.05	1988		62119	1 Urbis LED	Teceo 48 LED 700mA	104 Watts	12.00 Metres	Steel	
Y	4	STREET LIGHTING	FREDERICK WARD WAY	GRIMSBY	526570.41	409237.98	1988		61588	1 Urbis LED	Teceo 48 LED 700mA	104 Watts	12.00 Metres	Steel	
Y	4	STREET LIGHTING	FREDERICK WARD WAY	GRIMSBY	526570.41	409237.98	1988		62120	1 Urbis LED		104 Watts	12.00 Metres	Steel	
Y	5	STREET LIGHTING	FREDERICK WARD WAY	GRIMSBY	526576.99	409255.51	1988		48960	1 Urbis LED	Teceo 48 LED 700mA	104 Watts	12.00 Metres	Galvanised Steel	
Y	6	STREET LIGHTING	FREDERICK WARD WAY	GRIMSBY	526580.79	409266.65	1988		48961	Urbis	AXIA 3.3 48 LED 540mA	78 Watts	12.00 Metres	Steel	
Y	7	STREET LIGHTING	FREDERICK WARD WAY	GRIMSBY	526585.6	409280.57	1988		48962	1 Urbis LED	Teceo 48 LED 700mA	104 Watts	12.00 Metres	Galvanised Steel	
Y	8	STREET LIGHTING	FREDERICK WARD WAY	GRIMSBY	526604.58	409296.39	1988		48963	1 Urbis LED	Teceo 48 LED 700mA	104 Watts	12.00 Metres	Galvanised Steel	
Y	9	STREET LIGHTING	FREDERICK WARD WAY	GRIMSBY	526608.18	409318.25	2020	08/04/2020	68227	Urbis	Ampera 48 LED 700mA	104 Watts	12.00 Metres	Galvanised Steel	
Y	10	STREET LIGHTING	FREDERICK WARD WAY	GRIMSBY	526596.99	409353.1	1988		61590	1 Urbis LED	Ampera 48 LED 700mA	104 Watts	18.00 Metres	Galvanised Steel	
Y	10	STREET LIGHTING	FREDERICK WARD WAY	GRIMSBY	526596.99	409353.1	1988		62122	1 Urbis LED	Ampera 48 LED 700mA	104 Watts	18.00 Metres	Galvanised Steel	
Y	11	STREET LIGHTING	FREDERICK WARD WAY	GRIMSBY	526594.51	409384.94	1989		61591	1 Urbis LED	Teceo 48 LED 700mA	104 Watts	12.00 Metres	Galvanised Steel	
Y	11	STREET LIGHTING	FREDERICK WARD WAY	GRIMSBY	526594.51	409384.94	1989		62123	1 Urbis LED	Teceo 48 LED 700mA	104 Watts	12.00 Metres	Galvanised Steel	
Y	12	STREET LIGHTING	FREDERICK WARD WAY	GRIMSBY	526611.65	409422.73	2019	30/08/2019	67263	Urbis	Teceo 48 LED 700mA	104 Watts	12.00 Metres	Galvanised Steel	
Y	13	STREET LIGHTING	FREDERICK WARD WAY	GRIMSBY	526636.03	409438.93	1988		48965	1 Urbis LED	Teceo 48 LED 700mA	104 Watts	12.00 Metres	Galvanised Steel	
Y	14	STREET LIGHTING	FREDERICK WARD WAY	GRIMSBY	526667.65	409451.2	1988		48966	1 Urbis LED	Teceo 48 LED 700mA	104 Watts	12.00 Metres	Galvanised Steel	
Y	15	STREET LIGHTING	FREDERICK WARD WAY	GRIMSBY	526693.55	409461.62	2019	30/08/2019	67264	Urbis	Teceo 48 LED 700mA	104 Watts	12.00 Metres	Galvanised Steel	
Y	16	STREET LIGHTING	FREDERICK WARD WAY	GRIMSBY	526712.84	409469.11	1988		48968	1 Urbis LED	Teceo 48 LED 700mA	104 Watts	12.00 Metres	Galvanised Steel	
Y	17	STREET LIGHTING	FREDERICK WARD WAY	GRIMSBY	526748.28	409484.6	1988		48969	1 Urbis LED	Teceo 48 LED 700mA	104 Watts	12.00 Metres	Galvanised Steel	
Y	18	STREET LIGHTING	FREDERICK WARD WAY	GRIMSBY					69993						
Y	19	STREET LIGHTING	FREDERICK WARD WAY	GRIMSBY	526803.52	409502.39	1988		48971	1 Urbis LED	Teceo 48 LED 700mA	104 Watts	12.00 Metres	Galvanised Steel	
Y	20	STREET LIGHTING	FREDERICK WARD WAY	GRIMSBY	526835.24	409511.11	2019	30/08/2019	67265	Urbis	Teceo 48 LED 700mA	104 Watts	12.00 Metres	Galvanised Steel	
Y	21	STREET LIGHTING	FREDERICK WARD WAY	GRIMSBY	526858.58	409515.81	1988		48973	1 Urbis LED	Teceo 48 LED 700mA	104 Watts	12.00 Metres	Galvanised Steel	
Y	22	STREET LIGHTING	FREDERICK WARD WAY	GRIMSBY	526897.32	409523.72	1989		48974	1 Urbis LED	Teceo 48 LED 700mA	104 Watts	12.00 Metres	Galvanised Steel	
Y	23	STREET LIGHTING	FREDERICK WARD WAY	GRIMSBY	526926.99	409531.71	2020	02/01/2020	67266	Urbis	Teceo 48 LED 700mA	104 Watts	12.00 Metres	Galvanised Steel	
Y	24	STREET LIGHTING	FREDERICK WARD WAY	GRIMSBY	526973.64	409520.68	1989		61592	1 Urbis LED	Ampera 48 LED 700mA	104 Watts	18.00 Metres	Galvanised Steel	
Y	24	STREET LIGHTING	FREDERICK WARD WAY	GRIMSBY	526973.64	409520.68	1989		62124	1 Urbis LED	Ampera 48 LED 700mA	104 Watts	18.00 Metres	Galvanised Steel	
Y	25	STREET LIGHTING	FREDERICK WARD WAY	GRIMSBY	527014.02	409526.5	1989		61593	1 Urbis LED	Ampera 48 LED 700mA	104 Watts	18.00 Metres	Galvanised Steel	
Y	25	STREET LIGHTING	FREDERICK WARD WAY	GRIMSBY	527014.02	409526.5	1989		62125	1 Urbis LED	Ampera 48 LED 700mA	104 Watts	18.00 Metres	Galvanised Steel	
Y	26	STREET LIGHTING	FREDERICK WARD WAY	GRIMSBY	527055.03	409533.03	1989		61594	1 Urbis LED	Ampera 48 LED 700mA	104 Watts	18.00 Metres	Galvanised Steel	
Y	26	STREET LIGHTING	FREDERICK WARD WAY	GRIMSBY	527055.03	409533.03	1989		62126	1 Urbis LED	Ampera 48 LED 700mA	104 Watts	18.00 Metres	Galvanised Steel	
Y	27	STREET LIGHTING	FREDERICK WARD WAY	GRIMSBY	527104.32	409541.51	1989		61595	1 Urbis LED	Ampera 48 LED 700mA	104 Watts	18.00 Metres	Galvanised Steel	
Y	27	STREET LIGHTING	FREDERICK WARD WAY	GRIMSBY	527104.32	409541.51	1989		62127	1 Urbis LED	Ampera 48 LED 700mA	104 Watts	18.00 Metres	Galvanised Steel	
Y	28	STREET LIGHTING	FREDERICK WARD WAY	GRIMSBY	527153.33	409561.45	1989		48976	1 Urbis LED	Ampera 48 LED 700mA	104 Watts	18.00 Metres	Galvanised Steel	
Y	29	STREET LIGHTING	FREDERICK WARD WAY	GRIMSBY	527156.67	409535.79	1989		48977	1 Urbis LED	Ampera 48 LED 700mA	104 Watts	18.00 Metres	Galvanised Steel	
Y	30	STREET LIGHTING	FREDERICK WARD WAY	GRIMSBY	527198.69	409569.53	1989		48978	1 Urbis LED	Ampera 48 LED 700mA	104 Watts	18.00 Metres	Galvanised Steel	
Y	31	STREET LIGHTING	FREDERICK WARD WAY	GRIMSBY	527200.09	409543.17	1989		48979	1 Urbis LED	Ampera 48 LED 700mA	104 Watts	18.00 Metres	Galvanised Steel	
Y	1	STREET LIGHTING	GROSVENOR CRESCENT	GRIMSBY	526557.79	408960.82	1989		49932	Urbis	Axia 16 LED 350mA	19 Watts	6.00 Metres	Galvanised Steel	
Y	2	STREET LIGHTING	GROSVENOR CRESCENT	GRIMSBY	526562.1	408967.15	1989		49933	Urbis	Axia 16 LED 350mA	19 Watts	6.00 Metres	Unknown	
Y	3	STREET LIGHTING	GROSVENOR CRESCENT	GRIMSBY	526565.64	408976.77	1989		49934	Urbis	Axia 16 LED 350mA	19 Watts	5.00 Metres	Galvanised Steel	
Y	4	STREET LIGHTING	GROSVENOR CRESCENT	GRIMSBY	526575.13	408989.24	1989		49935	Urbis	Axia 16 LED 350mA	19 Watts	5.00 Metres	Galvanised Steel	
Y	5	STREET LIGHTING	GROSVENOR CRESCENT	GRIMSBY	526592.6	409014.87	1989		49936	Urbis	Axia 16 LED 350mA	19 Watts	5.00 Metres	Galvanised Steel	
Y	1	STREET LIGHTING	VICTORIA STREET WEST	GRIMSBY	526721.37	409291.08	2008		59607	DW Windsor		150 Watts	8.00 Metres	Galvanised Steel	
Y	1	STREET LIGHTING	VICTORIA STREET WEST	GRIMSBY	526129.69	409293.88	2008		62472	DW Windsor		150 Watts	8.00 Metres	Galvanised Steel	
Y	2	STREET LIGHTING	VICTORIA STREET WEST	GRIMSBY	526737.81	409296.96	2008		59608	DW Windsor		150 Watts	8.00 Metres	Galvanised Steel	
Y	2	STREET LIGHTING	VICTORIA STREET WEST	GRIMSBY	526737.81	409296.96	2008		62473	DW Windsor		150 Watts	8.00 Metres	Galvanised Steel	
Y	3	STREET LIGHTING	VICTORIA STREET WEST	GRIMSBY	526758.06	409304.96			61938	DW Windsor		150 Watts			
Y	3	STREET LIGHTING	VICTORIA STREET WEST	GRIMSBY	526758.06	409304.96			62474	DW Windsor		150 Watts			
Y	3	STREET LIGHTING	VICTORIA STREET WEST	GRIMSBY					62475	DW Windsor		150 Watts			
Y	3	STREET LIGHTING	VICTORIA STREET WEST	GRIMSBY	526758.06	409304.96			62537	DW Windsor		150 Watts			
Y	4	STREET LIGHTING	VICTORIA STREET WEST	GRIMSBY	526773.74	409310.71	2008		59609	DW Windsor		150 Watts	8.00 Metres	Galvanised Steel	
Y	4	STREET LIGHTING	VICTORIA STREET WEST	GRIMSBY			2008		62476	DW Windsor		150 Watts	8.00 Metres	Galvanised Steel	
Y	5	STREET LIGHTING	VICTORIA STREET WEST	GRIMSBY	526786.21	409315.36	2008		59610	DW Windsor		150 Watts	8.00 Metres	Galvanised Steel	
Y	5	STREET LIGHTING	VICTORIA STREET WEST	GRIMSBY			2008		62477	DW Windsor		150 Watts	8.00 Metres	Galvanised Steel	
Y	6	STREET LIGHTING	VICTORIA STREET WEST	GRIMSBY	526799.71	409321.08			61939	DW Windsor		150 Watts			
Y	6	STREET LIGHTING	VICTORIA STREET WEST	GRIMSBY					62478	DW Windsor		150 Watts			
Y	6	STREET LIGHTING	VICTORIA STREET WEST	GRIMSBY					62479	DW Windsor		150 Watts			
Y	7	STREET LIGHTING	VICTORIA STREET WEST	GRIMSBY	526814.52	409326.83	2008		59611	DW Windsor		150 Watts	8.00 Metres	Galvanised Steel	
Y	7	STREET LIGHTING	VICTORIA STREET WEST	GRIMSBY			2008		62480	DW Windsor		150 Watts	8.00 Metres	Galvanised Steel	
Y	8	STREET LIGHTING	VICTORIA STREET WEST	GRIMSBY	526830.32	409333.19			61940	DW Windsor		150 Watts			
Y	8	STREET LIGHTING	VICTORIA STREET WEST	GRIMSBY	526830.32	409333.19			62481	DW Windsor		150 Watts			
Y	8	STREET LIGHTING	VICTORIA STREET WEST	GRIMSBY	526830.32	409333.19			62482	DW Windsor		150 Watts			
Y	8	STREET LIGHTING	VICTORIA STREET WEST	GRIMSBY	526830.32	409333.19			62538	DW Windsor		150 Watts			
Y	8	STREET LIGHTING	VICTORIA STREET WEST	GRIMSBY	526830.32	409333.19			62539	DW Windsor		150 Watts			
Y	8	STREET LIGHTING	VICTORIA STREET WEST	GRIMSBY	526830.32	409333.19			62540	DW Windsor		150 Watts			
Y	9	STREET LIGHTING	VICTORIA STREET WEST	GRIMSBY	526842.64	409338.01			61941	DW Windsor		150 Watts			
Y	9	STREET LIGHTING	VICTORIA STREET WEST	GRIMSBY	526842.64	409338.01			62483	DW Windsor		150 Watts			
Y	9	STREET LIGHTING	VICTORIA STREET WEST	GRIMSBY	526842.64	409338.01			62484	DW Windsor		150 Watts			
Y	10	STREET LIGHTING	VICTORIA STREET WEST	GRIMSBY	526869.29	409350.95			61942	DW Windsor		150 Watts			
Y	10	STREET LIGHTING	VICTORIA STREET WEST	GRIMSBY					62485	DW Windsor		150 Watts			
Y	10	STREET LIGHTING	VICTORIA STREET WEST	GRIMSBY					62486	DW Windsor		150 Watts			
Y	10	STREET LIGHTING	VICTORIA STREET WEST	GRIMSBY					62541	DW Windsor		150 Watts			
Y	10	STREET LIGHTING	VICTORIA STREET WEST	GRIMSBY					62542	DW Windsor		150 Watts			
Y	10	STREET LIGHTING	VICTORIA STREET WEST	GRIMSBY					62543	DW Windsor		150 Watts			
Y	10	STREET LIGHTING	VICTORIA STREET WEST	GRIMSBY					62544	DW Windsor		150 Watts			
Y	10	STREET LIGHTING	VICTORIA STREET WEST	GRIMSBY					62545	DW Windsor		150 Watts			
Y	10	STREET LIGHTING	VICTORIA STREET WEST	GRIMSBY					62546	DW Windsor		150 Watts			
Y	11	STREET LIGHTING	VICTORIA STREET WEST	GRIMSBY	526889.41	409358.51			61943	DW Windsor		150 Watts			
Y	11	STREET LIGHTING	VICTORIA STREET WEST	GRIMSBY					62487	DW Windsor		150 Watts			
Y	11	STREET LIGHTING	VICTORIA STREET WEST	GRIMSBY					62488	DW Windsor		150 Watts			
Y	12	STREET LIGHTING	VICTORIA STREET WEST	GRIMSBY	526910.47	409365.54	2008		59612	DW Windsor		150 Watts	10.00 Metres	Galvanised Steel	
Y	12	STREET LIGHTING	VICTORIA STREET WEST	GRIMSBY			2008		62489	DW Windsor		150 Watts	10.00 Metres	Galvanised Steel	
Y	13	STREET LIGHTING	VICTORIA STREET WEST	GRIMSBY	526928.84	409371.54			61944	DW Windsor		150 Watts			
Y	13	STREET LIGHTING	VICTORIA STREET WEST	GRIMSBY					62490	DW Windsor		150 Watts			
Y	13	STREET LIGHTING	VICTORIA STREET WEST	GRIMSBY					62491	DW Windsor		150 Watts			
Y	13	STREET LIGHTING	VICTORIA STREET WEST	GRIMSBY					62547	DW Windsor		150 Watts			
Y	13	STREET LIGHTING	VICTORIA STREET WEST	GRIMSBY					62548	DW Windsor		150 Watts			
Y	13	STREET LIGHTING	VICTORIA STREET WEST	GRIMSBY					62549	DW Windsor		150 Watts			
Y	13	STREET LIGHTING	VICTORIA STREET WEST	GRIMSBY					62550	DW Windsor		150 Watts			
Y	14	STREET LIGHTING	VICTORIA STREET WEST	GRIMSBY	526956.57	409380.59			61945	DW Windsor		150 Watts			
Y	14	STREET LIGHTING	VICTORIA STREET WEST	GRIMSBY	526956.57	409380.59			62492	DW Windsor		150 Watts			
Y	14	STREET LIGHTING	VICTORIA STREET WEST	GRIMSBY	526956.57	409380.59			62493	DW Windsor		150 Watts			
Y	14	STREET LIGHTING	VICTORIA STREET WEST	GRIMSBY	526956.57	409380.59			62551	DW Windsor		150 Watts			
Y	14	STREET LIGHTING	VICTORIA STREET WEST	GRIMSBY	526956.57	409380.59			62552	DW Windsor		150 Watts			
Y	14	STREET LIGHTING	VICTORIA STREET WEST	GRIMSBY	526956.57	409380.59			62553	DW Windsor		150 Watts			
Y	14	STREET LIGHTING	VICTORIA STREET WEST	GRIMSBY	526956.57	409380.59			62554	DW Windsor		150 Watts			
Y	15	STREET LIGHTING	VICTORIA STREET WEST	GRIMSBY	526977.7	409387.03			61946	DW Windsor		150 Watts			
Y	15	STREET LIGHTING	VICTORIA STREET WEST	GRIMSBY	526977.7	409387.03			62494	DW Windsor		150 Watts			
Y	15	STREET LIGHTING	VICTORIA STREET WEST	GRIMSBY	526977.7	409387.03			62495	DW Windsor		150 Watts			
Y	15	STREET LIGHTING	VICTORIA STREET WEST	GRIMSBY	526977.7	409387.03			62555	DW Windsor		150 Watts			
Y	15	STREET LIGHTING	VICTORIA STREET WEST	GRIMSBY	526977.7	409387.03			62556	DW Windsor		150 Watts			

Y	15	STREET LIGHTING	VICTORIA STREET WEST	GRIMSBY	526977.7	409387.03			62557	DW Windsor		150 Watts			
Y	16	STREET LIGHTING	VICTORIA STREET WEST	GRIMSBY	527016.62	409389.64	2014	11/03/2014	66974	1 Urbis LED	Teceo 48 LED 700mA	104 Watts	10.00 Metres	Galvanised Steel	
Y	17	STREET LIGHTING	VICTORIA STREET WEST	GRIMSBY	527048.89	409397.57	2014	11/03/2014	66975	1 Urbis LED	Teceo 48 LED 700mA	104 Watts	10.00 Metres	Galvanised Steel	
Y	18	STREET LIGHTING	VICTORIA STREET WEST	GRIMSBY	527080.47	409407.97	2014	11/03/2014	66976	1 Urbis LED	Teceo 48 LED 700mA	104 Watts	10.00 Metres	Galvanised Steel	
Y	19	STREET LIGHTING	VICTORIA STREET WEST	GRIMSBY	527112.15	409416.76	2014	11/03/2014	66977	1 Urbis LED	Teceo 48 LED 700mA	104 Watts	10.00 Metres	Galvanised Steel	
Y	20	STREET LIGHTING	VICTORIA STREET WEST	GRIMSBY	527131.02	409440.54	2014		59618	1 Urbis LED	Teceo 48 LED 500mA	79 Watts	10.00 Metres	Galvanised Steel	
Y	1	STREET LIGHTING	ABBEY ROAD	GRIMSBY	526965.25	408965.87	2004		42675	1 Urbis LED	Teceo 48 LED 500mA	79 Watts	10.00 Metres	Stainless Steel	
Y	2	STREET LIGHTING	ABBEY ROAD	GRIMSBY	526940.03	408967.29	1950		42676	1 Urbis LED	Teceo 48 LED 500mA	79 Watts	8.00 Metres	Steel	
Y	3	STREET LIGHTING	ABBEY ROAD	GRIMSBY	526908.49	408946.88	2024	23/02/2024	69814	Urbis	AXIA 3.2 32 LED 630 mA	62 Watts	8.00 Metres	Galvanised Steel	
Y	4	STREET LIGHTING	ABBEY ROAD	GRIMSBY	526885.72	408936.64	1950		42678	1 Urbis LED	Teceo 48 LED 500mA	79 Watts	8.00 Metres	Steel	
Y	5	STREET LIGHTING	ABBEY ROAD	GRIMSBY	526874.67	408918.68	1950		42679	1 Urbis LED	Teceo 48 LED 500mA	79 Watts	8.00 Metres	Steel	
Y	6	STREET LIGHTING	ABBEY ROAD	GRIMSBY	526845.77	408912.42	1950		42680	1 Urbis LED	Teceo 48 LED 500mA	79 Watts	8.00 Metres	Steel	
Y	7	STREET LIGHTING	ABBEY ROAD	GRIMSBY	526819.26	408895.02	1999		42681	1 Urbis LED	Teceo 48 LED 500mA	79 Watts	8.00 Metres	Steel	
Y	8	STREET LIGHTING	ABBEY ROAD	GRIMSBY	526793.11	408878.09	1950		42682	1 Urbis LED	Teceo 48 LED 500mA	79 Watts	8.00 Metres	Steel	
Y	9	STREET LIGHTING	ABBEY ROAD	GRIMSBY	526754.63	408852.4	1950		42683	1 Urbis LED	Teceo 48 LED 500mA	79 Watts	8.00 Metres	Steel	
Y	10	STREET LIGHTING	ABBEY ROAD	GRIMSBY	526717.44	408828.19	1950		42684	1 Urbis LED	Teceo 48 LED 500mA	79 Watts	8.00 Metres	Steel	
Y	11	STREET LIGHTING	ABBEY ROAD	GRIMSBY	526684.48	408807.48	1950		42685	1 Urbis LED	Teceo 48 LED 500mA	79 Watts	8.00 Metres	Steel	
Y	12	STREET LIGHTING	ABBEY ROAD	GRIMSBY	526654.29	408778.19	2008		42686	1 Urbis LED	Teceo 48 LED 500mA	79 Watts	8.00 Metres	Steel	
Y	13	STREET LIGHTING	ABBEY ROAD	GRIMSBY	526626.49	408752.24	1950		42687	1 Urbis LED	Teceo 48 LED 500mA	79 Watts	8.00 Metres	Steel	
Y	14	STREET LIGHTING	ABBEY ROAD	GRIMSBY	526597.21	408735.58	1950		42688	1 Urbis LED	Teceo 48 LED 500mA	79 Watts	8.00 Metres	Steel	
Y	15	STREET LIGHTING	ABBEY ROAD	GRIMSBY	526568.49	408707.31	1950		42689	1 Urbis LED	Teceo 48 LED 500mA	79 Watts	8.00 Metres	Steel	
Y	16	STREET LIGHTING	ABBEY ROAD	GRIMSBY	526545.95	408702.59	2004		42690	1 Urbis LED	Teceo 24 LED 500mA	40 Watts	6.00 Metres	Stainless Steel	
Y	17	STREET LIGHTING	ABBEY ROAD	GRIMSBY	526520.78	408688.74	2004		42691	1 Urbis LED	Teceo 24 LED 500mA	40 Watts	6.00 Metres	Stainless Steel	
Y	18	STREET LIGHTING	ABBEY ROAD	GRIMSBY	526507.3	408671.58	2004		42692	1 Urbis LED	Teceo 24 LED 500mA	40 Watts	6.00 Metres	Stainless Steel	
Y	19	STREET LIGHTING	ABBEY ROAD	GRIMSBY	526486.62	408661.25	2004		42693	1 Urbis LED	Teceo 24 LED 500mA	40 Watts	6.00 Metres	Stainless Steel	
Y	1	STREET LIGHTING	DEANSGROVE	GRIMSBY	526576.71	409074.75	2002		47408	Urbis	Axia 16 LED 350mA	19 Watts	6.00 Metres	Stainless Steel	
Y	2	STREET LIGHTING	DEANSGROVE	GRIMSBY	526565.95	409040.51	1980		47409	Urbis	Axia 16 LED 350mA	19 Watts	5.00 Metres	Galvanised Steel	
Y	1	STREET LIGHTING	STATION APPROACH	GRIMSBY	526762.77	409186.11	2014	21/01/2014	68567	Urbis	Teceo 24 LED 500mA	40 Watts	6.00 Metres	WOOD	
Y	2	STREET LIGHTING	STATION APPROACH	GRIMSBY	526768.85	409178.81	2014	21/01/2014	68568	Urbis	Teceo 24 LED 500mA	40 Watts	6.00 Metres	WOOD	
Y	3	STREET LIGHTING	STATION APPROACH	GRIMSBY	526780.69	409168.97	2014	21/01/2014	68569	Urbis	Teceo 24 LED 500mA	40 Watts	6.00 Metres	WOOD	
Y	4	STREET LIGHTING	STATION APPROACH	GRIMSBY	526791.31	409159.95	2017	10/07/2017	68571	Urbis	Teceo 24 LED 500mA	40 Watts	6.00 Metres	WOOD	
Y	5	STREET LIGHTING	STATION APPROACH	GRIMSBY	526802.62	409158.52	2014	21/01/2014	68570	Urbis	Teceo 24 LED 500mA	40 Watts	6.00 Metres	WOOD	
Y	1	STREET LIGHTING	PHYLLIS TAYLOR GARDENS	GRIMSBY	526961.48	409055.95	2008		55428	Urbis	Axia 8 LED 350mA	10 Watts	5.00 Metres	Steel	
Y	2	STREET LIGHTING	PHYLLIS TAYLOR GARDENS	GRIMSBY	526962.55	409035.39	2008		55429	Urbis	Axia 8 LED 350mA	10 Watts	5.00 Metres	Steel	
Y	3	STREET LIGHTING	PHYLLIS TAYLOR GARDENS	GRIMSBY	526963.55	409018.76	2008		55430	Urbis	Axia 8 LED 350mA	10 Watts	5.00 Metres	Steel	
Y	4	STREET LIGHTING	PHYLLIS TAYLOR GARDENS	GRIMSBY	526962.34	408996.93	2008		55431	Urbis	Axia 8 LED 350mA	10 Watts	5.00 Metres	Steel	
Y	5	STREET LIGHTING	PHYLLIS TAYLOR GARDENS	GRIMSBY	526952.35	409010.06	2008		55432	Urbis	Axia 8 LED 350mA	10 Watts	5.00 Metres	Steel	
Y	6	STREET LIGHTING	PHYLLIS TAYLOR GARDENS	GRIMSBY	526929.65	409010.34	2008		55433	1 Urbis LED	Axia 16 LED 500mA	28 Watts	5.00 Metres	Steel	
Y	7	STREET LIGHTING	PHYLLIS TAYLOR GARDENS	GRIMSBY	526942.21	409028.97	2008		55434	1 Urbis LED	Axia 16 LED 500mA	28 Watts	5.00 Metres	Steel	
Y	8	STREET LIGHTING	PHYLLIS TAYLOR GARDENS	GRIMSBY	526946.56	409047.1	2008		55435	1 Urbis LED	Axia 16 LED 500mA	28 Watts	5.00 Metres	Steel	
Y	9	STREET LIGHTING	PHYLLIS TAYLOR GARDENS	GRIMSBY	526927.65	409027.04	2008		55436	1 Urbis LED	Axia 16 LED 500mA	28 Watts	6.00 Metres	Steel	
Y	1	STREET LIGHTING	HUMBERSTON PUBLIC PATH 55	HUMBERSTON	531280.75	405488.26	2016	11/02/2016	68511	Urbis	Axia 16 LED 500mA	28 Watts	6.00 Metres	Steel	
Y	2	STREET LIGHTING	HUMBERSTON PUBLIC PATH 55	HUMBERSTON	531279.25	405516.54	2016	11/02/2016	68513	Urbis	Axia 16 LED 500mA	28 Watts	6.00 Metres	Steel	
Y	3	STREET LIGHTING	HUMBERSTON PUBLIC PATH 55	HUMBERSTON	531272.45	405560.85	2016	11/02/2016	68512	Urbis	Axia 16 LED 500mA	28 Watts	6.00 Metres	Steel	
Y	4	STREET LIGHTING	HUMBERSTON PUBLIC PATH 55	HUMBERSTON	531248.93	405683.12	2012	01/10/2012	51115	1 Urbis LED	Axia 16 LED 500mA	28 Watts	6.00 Metres	Steel	
Y	5	STREET LIGHTING	HUMBERSTON PUBLIC PATH 55	HUMBERSTON	531240.95	405732.07	2016	11/02/2016	68514	Urbis	Axia 16 LED 500mA	28 Watts	6.00 Metres	Steel	
Y	1	STREET LIGHTING	BOWLING GREEN LANE	GRIMSBY	527319.78	409384.55	1956		44444	1 Urbis LED	Teceo 40 LED 500mA	64 Watts	10.00 Metres	Galvanised Steel	
Y	2	STREET LIGHTING	BOWLING GREEN LANE	GRIMSBY	527330.41	409381.07	1956		44445	1 Urbis LED	Teceo 24 LED 500mA	40 Watts	6.00 Metres	Galvanised Steel	
Y	3	STREET LIGHTING	BOWLING GREEN LANE	GRIMSBY	527325.34	409350.52	1956		44446	1 Urbis LED	Teceo 24 LED 500mA	40 Watts	6.00 Metres	Galvanised Steel	
Y	4	STREET LIGHTING	BOWLING GREEN LANE	GRIMSBY	527303.47	409357.61	1956		44447	1 Urbis LED	Teceo 40 LED 500mA	64 Watts	8.00 Metres	Galvanised Steel	
Y	5	STREET LIGHTING	BOWLING GREEN LANE	GRIMSBY	527322.89	409331.41	1956		44448	1 Urbis LED	Teceo 40 LED 500mA	64 Watts	8.00 Metres	Galvanised Steel	
Y	6	STREET LIGHTING	BOWLING GREEN LANE	GRIMSBY	527358.42	409325.33	1956		44449	1 Urbis LED	Teceo 40 LED 500mA	64 Watts	8.00 Metres	Galvanised Steel	
Y	1	STREET LIGHTING	BULLER STREET	GRIMSBY	527953.49	409276.61	1986		44916	1 Urbis LED	Axia 16 LED 500mA	28 Watts	6.00 Metres	Galvanised Steel	
Y	2	STREET LIGHTING	BULLER STREET	GRIMSBY	527987.03	409280.85	1986		44917	1 Urbis LED	Axia 16 LED 500mA	28 Watts	6.00 Metres	Galvanised Steel	
Y	3	STREET LIGHTING	BULLER STREET	GRIMSBY	528013.48	409306.74	1986		44918	1 Urbis LED	Axia 16 LED 500mA	28 Watts	6.00 Metres	Galvanised Steel	
Y	4	STREET LIGHTING	BULLER STREET	GRIMSBY	528043.74	409321.55	1986		44919	1 Urbis LED	Axia 16 LED 500mA	28 Watts	6.00 Metres	Galvanised Steel	
Y	5	STREET LIGHTING	BULLER STREET	GRIMSBY	528076.77	409327.87	1986		44920	1 Urbis LED	Axia 16 LED 500mA	28 Watts	6.00 Metres	Galvanised Steel	
Y	6	STREET LIGHTING	BULLER STREET	GRIMSBY	528102.72	409351.35	2016		44921	1 Urbis LED	Axia 16 LED 500mA	28 Watts	6.00 Metres	Galvanised Steel	
Y	7	STREET LIGHTING	BULLER STREET	GRIMSBY	528126.9	409353.06	1986		44922	1 Urbis LED	Axia 16 LED 500mA	28 Watts	6.00 Metres	Galvanised Steel	
Y	8	STREET LIGHTING	BULLER STREET	GRIMSBY	528152.59	409374.26	1986		44923	1 Urbis LED	Axia 16 LED 500mA	28 Watts	6.00 Metres	Galvanised Steel	
Y	9	STREET LIGHTING	BULLER STREET	GRIMSBY	528184	409380	2002		44924	1 Urbis LED	Axia 16 LED 500mA	28 Watts	6.00 Metres	Stainless Steel	
Y	10	STREET LIGHTING	BULLER STREET	GRIMSBY	528201.22	409388.8	1986		44925	1 Urbis LED	Axia 16 LED 500mA	28 Watts	6.00 Metres	Galvanised Steel	
Y	1	STREET LIGHTING	CATHERINE STREET	GRIMSBY	527602.51	409012.58	2002		45469	1 Urbis LED	Teceo 24 LED 500mA	40 Watts	6.00 Metres	Stainless Steel	
Y	2	STREET LIGHTING	CATHERINE STREET	GRIMSBY	527571.57	409007.84	2002		45470	1 Urbis LED	Teceo 24 LED 500mA	40 Watts	6.00 Metres	Stainless Steel	
Y	3	STREET LIGHTING	CATHERINE STREET	GRIMSBY	527539.89	409020.91	2002		45471	1 Urbis LED	Teceo 24 LED 500mA	40 Watts	6.00 Metres	Stainless Steel	
Y	4	STREET LIGHTING	CATHERINE STREET	GRIMSBY	527507.28	409009.72	2002		45472	1 Urbis LED	Teceo 24 LED 500mA	40 Watts	6.00 Metres	Stainless Steel	
Y	5	STREET LIGHTING	CATHERINE STREET	GRIMSBY	527484.2	409012.41	2002		45473	1 Urbis LED	Teceo 24 LED 500mA	40 Watts	6.00 Metres	Stainless Steel	
Y	6	STREET LIGHTING	CATHERINE STREET	GRIMSBY	527462.09	409024.99	2002		45474	1 Urbis LED	Teceo 24 LED 500mA	40 Watts	6.00 Metres	Stainless Steel	
Y	7	STREET LIGHTING	CATHERINE STREET	GRIMSBY	527437.06	409027.56	2001		45475	1 Urbis LED	Teceo 24 LED 500mA	40 Watts	6.00 Metres	Galvanised Steel	
Y	8	STREET LIGHTING	CATHERINE STREET	GRIMSBY	527409.06	409033.05	2001		45476	1 Urbis LED	Teceo 24 LED 500mA	40 Watts	6.00 Metres	Galvanised Steel	
Y	1	STREET LIGHTING	CAVENDISH WAY	GRIMSBY	527912.91	409367.32	2018	02/08/2018	66970	Urbis	Teceo 24 LED 500mA	40 Watts	6.00 Metres	Galvanised Steel	
Y	2	STREET LIGHTING	CAVENDISH WAY	GRIMSBY	527927.45	409408.91	1995		45516	1 Urbis LED	Teceo 24 LED 500mA	40 Watts	6.00 Metres	Galvanised Steel	
Y	3	STREET LIGHTING	CAVENDISH WAY	GRIMSBY	527924.92	409444.92	1968		45517	1 Urbis LED	Teceo 24 LED 500mA	40 Watts	6.00 Metres	Steel	
Y	1	STREET LIGHTING	CATHERINE STREET SUBWAY	GRIMSBY	527290.72	409079.1	2008		45492	Sondia		55 Watts	3.00 Metres	Unknown	
Y	2	STREET LIGHTING	CATHERINE STREET SUBWAY	GRIMSBY	527286.8	409080.36	2008		45493	Sondia		55 Watts	3.00 Metres	Unknown	
Y	3	STREET LIGHTING	CATHERINE STREET SUBWAY	GRIMSBY	527282.4	409081.84	2008		45494	Sondia		55 Watts	3.00 Metres	Unknown	
Y	4	STREET LIGHTING	CATHERINE STREET SUBWAY	GRIMSBY	527277.97	409083.35	2008		45495	Sondia		55 Watts	3.00 Metres	Unknown	
Y	5	STREET LIGHTING	CATHERINE STREET SUBWAY	GRIMSBY	527274.62	409084.43	2008		45496	Sondia		55 Watts	3.00 Metres	Unknown	
Y	6	STREET LIGHTING	CATHERINE STREET SUBWAY	GRIMSBY	527271.79	409085.4	2008		45497	Sondia		55 Watts	3.00 Metres	Unknown	
Y	1	STREET LIGHTING	CHURCHILL WAY	GRIMSBY	527773.91	409341.03	2003		46077	1 Urbis LED	Axia 16 LED 500mA	28 Watts	6.00 Metres	Stainless Steel	
Y	2	STREET LIGHTING	CHURCHILL WAY	GRIMSBY	527779.66	409381.84	2020	05/06/2020	67880	Urbis	Axia 24 LED 500mA	28 Watts	6.00 Metres	Galvanised Steel	
Y	3	STREET LIGHTING	CHURCHILL WAY	GRIMSBY	527797.79	409381.55	2003		46079	1 Urbis LED	Axia 16 LED 500mA	28 Watts	6.00 Metres	Stainless Steel	
Y	4	STREET LIGHTING	CHURCHILL WAY	GRIMSBY	527817.68	409365.15	2003		46080	1 Urbis LED	Axia 16 LED 500mA	28 Watts	6.00 Metres	Stainless Steel	
Y	5	STREET LIGHTING	CHURCHILL WAY	GRIMSBY	527836.72	409387.63	2003		46081	1 Urbis LED	Axia 16 LED 500mA	28 Watts	6.00 Metres	Stainless Steel	
Y	6	STREET LIGHTING	CHURCHILL WAY	GRIMSBY	527841.82	409406.75	2003		46082	1 Urbis LED	Axia 16 LED 500mA	28 Watts	6.00 Metres	Stainless Steel	
Y	7	STREET LIGHTING	CHURCHILL WAY	GRIMSBY	527813.17	409411.01	2003		46083	Urbis	Axia 8 LED 350mA	10 Watts	6.00 Metres	Galvanised Steel	
Y	8	STREET LIGHTING	CHURCHILL WAY	GRIMSBY	527813.12	409340.93	2003		46084	Urbis	Axia 8 LED 350mA	10 Watts	6.00 Metres	Galvanised Steel	
Y	9	STREET LIGHTING	CHURCHILL WAY	GRIMSBY	527843.8	409347.32	2003		46085	Urbis	Axia 8 LED 350mA	10 Watts	6.00 Metres	Galvanised Steel	
Y	10	STREET LIGHTING	CHURCHILL WAY	GRIMSBY	527851.17	409373.94	2003		46086	Urbis	Axia 8 LED 350mA	10 Watts	6.00 Metres	Galvanised Steel	
Y	11	STREET LIGHTING	CHURCHILL WAY	GRIMSBY	527863.99	409398.49	2003		46087	Urbis	Axia 8 LED 350mA	10 Watts	6.00 Metres	Galvanised Steel	
Y	12	STREET LIGHTING	CHURCHILL WAY	GRIMSBY	527872.99	409424.05	2003		46088	Urbis	Axia 8 LED 350mA	10 Watts	6.00 Metres	Galvanised Steel	
Y	13	STREET LIGHTING	CHURCHILL WAY	GRIMSBY	527886.62	409461.08	2003		46089	Urbis	Axia 8 LED 350mA	10 Watts	6.00 Metres	Galvanised Steel	
Y	14	STREET LIGHTING	CHURCHILL WAY	GRIMSBY	527887.29	409496.38	2003		46090	Urbis	Axia 8 LED 350mA	10 Watts	6.00 Metres	Galvanised Steel	
Y	15	STREET LIGHTING	CHURCHILL WAY	GRIMSBY	527857.63	409506.32	2003		46091	Urbis	Axia 8 LED 350mA	10 Watts	6.00 Metres	Galvanised Steel	
Y	16	STREET LIGHTING	CHURCHILL WAY	GRIMSBY	527796.56	409402.86	2003		46092	1 Urbis LED	Axia 16 LED 500mA	28 Watts	6.00 Metres	Stainless Steel	
Y	17	STREET LIGHTING	CHURCHILL WAY	GRIMSBY				30/05/2025	70213	Urbis	Axia 16 LED 500mA	28 Watts	6.00 Metres	Galvanised Steel	
Y	18	STREET LIGHTING	CHURCHILL WAY	GRIMSBY	527821.81	409448.52	2003		46094	1 Urbis LED	Axia 16 LED 500mA	28 Watts	6.00 Metres	Stainless Steel	
Y	19	STREET LIGHTING	CHURCHILL WAY	GRIMSBY	527847.85	409429.78	2003		46095	1 Urbis LED	Axia 16 LED 500mA	28 Watts	6.00 Metres	Stainless Steel	
Y	20	STREET LIGHTING	CHURCHILL WAY	GRIMSBY	527869.05	409465.15	2003		46096	1 Urbis LED	Axia 16 LED 500mA	28 Watts	6.00 Metres	Stainless Steel	
Y	21	STREET LIGHTING	CHURCHILL WAY	GRIMSBY	527818.47	409465.63	2003		46097	1 Urbis LED	Axia 16 LED 500mA	28 Watts	6.00 Metres	Stainless Steel	
Y	22	STREET LIGHTING	CHURCHILL WAY	GRIMSBY	527783.88	409497.96	2003		46098	1 Urbis LED	Axia 16 LED 500mA	28 Watts	6.00 Metres	Galvanised Steel	
Y	23	STREET LIGHTING	CHURCHILL WAY	GRIMSBY	527809.93	409497.45	2003		46099	1 Urbis LED	Axia 16 LED 500mA	28 Watts	6.00 Metres	Stainless Steel	
Y	24	STREET LIGHTING	CHURCHILL WAY	GRIMSBY	527826.12	409487.33	2003		46100	1 Urbis LED	Axia 16 LED 500mA	28 Watts	6.00 Metres	Stainless Steel	
Y	25	STREET LIGHTING	CHURCHILL WAY	GRIMSBY	527829.98	409513.25	2003		46101	1 Urbis LED	Axia 16 LED 500mA	28 Watts	6.00 Metres	Galvanised Steel	
Y	26	STREET LIGHTING	CHURCHILL WAY	GRIMSBY	527840.55	409485.25	2003		46102	Urbis	Axia 8 LED 350mA	10 Watts	6.00 Metres	Galvanised Steel	
Y	27	STREET LIGHTING	CHURCHILL WAY	GRIMSBY	527772.76	409456.36	2014		62930	Urbis	Axia 8 LED 350mA	10 Watts	6.00 Metres	Galvanised Steel	
Y	28	STREET LIGHTING	CHURCHILL WAY	GRIMSBY	527759.52	409414.82	2014		62931	Urbis	Axia 8 LED 350mA	10 Watts	6.00 Metres	Galvanised Steel	
Y	29	STREET LIGHTING	CHURCHILL WAY	GRIMSBY	527761.88	409386.34	2014		62932	Urbis	Axia 8 LED 350mA	10 Watts	6.00 Metres	Galvanised Steel	
Y	30	STREET LIGHTING	CHURCHILL WAY	GRIMSBY	527745.19	409358.59	2014		62933	Urbis	Axia 8 LED 350mA	10 Watts	6.00 Metres	Galvanised Steel	
Y	1	STREET LIGHTING	COOPER ROAD	GRIMSBY	528055.89	409040.6	1991		46654	Urbis	Axia 16 LED 350mA	19 Watts	6.00 Metres	Galvanised Steel	

Y	2	STREET LIGHTING	COOPER ROAD	GRIMSBY	528082.6	409041.67	1991		46655	Urbis	Axia 16 LED 350mA	19 Watts	6.00 Metres	Galvanised Steel	
Y	3	STREET LIGHTING	COOPER ROAD	GRIMSBY	528105.76	409053.51	1991		46656	Urbis	Axia 16 LED 350mA	19 Watts	6.00 Metres	Galvanised Steel	
Y	4	STREET LIGHTING	COOPER ROAD	GRIMSBY	528130.7	409065.98	1991		46657	Urbis	Axia 16 LED 350mA	19 Watts	6.00 Metres	Galvanised Steel	
Y	5	STREET LIGHTING	COOPER ROAD	GRIMSBY	528151.84	409076.55	1991		46658	Urbis	Axia 16 LED 350mA	19 Watts	6.00 Metres	Galvanised Steel	
Y	6	STREET LIGHTING	COOPER ROAD	GRIMSBY	528176.65	409089.4	1991		46659	Urbis	Axia 16 LED 350mA	19 Watts	6.00 Metres	Galvanised Steel	
Y	7	STREET LIGHTING	COOPER ROAD	GRIMSBY	528200.19	409100.85	1991		46660	Urbis	Axia 16 LED 350mA	19 Watts	6.00 Metres	Galvanised Steel	
Y	8	STREET LIGHTING	COOPER ROAD	GRIMSBY	528214.37	409120.73	1991		46661	Urbis	Axia 16 LED 350mA	19 Watts	6.00 Metres	Galvanised Steel	
Y	9	STREET LIGHTING	COOPER ROAD	GRIMSBY	528240.07	409133.26	1991		46662	Urbis	Axia 16 LED 350mA	19 Watts	6.00 Metres	Galvanised Steel	
Y	10	STREET LIGHTING	COOPER ROAD	GRIMSBY	528269.43	409135.47	1991		46663	Urbis	Axia 16 LED 350mA	19 Watts	6.00 Metres	Galvanised Steel	
Y	11	STREET LIGHTING	COOPER ROAD	GRIMSBY	528288.55	409157.56	1991		46664	Urbis	Axia 16 LED 350mA	19 Watts	6.00 Metres	Galvanised Steel	
Y	12	STREET LIGHTING	COOPER ROAD	GRIMSBY	528320.7	409161.3	1991		46665	Urbis	Axia 16 LED 350mA	19 Watts	6.00 Metres	Galvanised Steel	
Y	13	STREET LIGHTING	COOPER ROAD	GRIMSBY	528338.8	409182.88	1991		46666	Urbis	Axia 16 LED 350mA	19 Watts	6.00 Metres	Galvanised Steel	
Y	14	STREET LIGHTING	COOPER ROAD	GRIMSBY	528360.44	409181.55	1991		46667	Urbis	Axia 16 LED 350mA	19 Watts	6.00 Metres	Galvanised Steel	
Y	15	STREET LIGHTING	COOPER ROAD	GRIMSBY	528376.14	409201.61	1991		46668	Urbis	Axia 16 LED 350mA	19 Watts	6.00 Metres	Galvanised Steel	
Y	16	STREET LIGHTING	COOPER ROAD	GRIMSBY	528400.06	409213.2	1991		46669	Urbis	Axia 16 LED 350mA	19 Watts	6.00 Metres	Galvanised Steel	
Y	17	STREET LIGHTING	COOPER ROAD	GRIMSBY	528423.73	409225.28	1991		46670	Urbis	Axia 16 LED 350mA	19 Watts	6.00 Metres	Galvanised Steel	
Y	18	STREET LIGHTING	COOPER ROAD	GRIMSBY	528446.77	409236.87	1991		46671	Urbis	Axia 16 LED 350mA	19 Watts	6.00 Metres	Galvanised Steel	
Y	19	STREET LIGHTING	COOPER ROAD	GRIMSBY	528470.57	409249.21	1991		46672	Urbis	Axia 16 LED 350mA	19 Watts	6.00 Metres	Galvanised Steel	
Y	20	STREET LIGHTING	COOPER ROAD	GRIMSBY	528500.57	409251.99	1991		46673	Urbis	Axia 16 LED 350mA	19 Watts	6.00 Metres	Galvanised Steel	
Y	21	STREET LIGHTING	COOPER ROAD	GRIMSBY	528520.19	409261.8	1991		46674	Urbis	Axia 16 LED 350mA	19 Watts	6.00 Metres	Galvanised Steel	
Y	22	STREET LIGHTING	COOPER ROAD	GRIMSBY	528547.15	409275.35	1991		46675	Urbis	Axia 16 LED 350mA	19 Watts	6.00 Metres	Galvanised Steel	
Y	23	STREET LIGHTING	COOPER ROAD	GRIMSBY	528570.44	409287.38	1991		46676	Urbis	Axia 16 LED 350mA	19 Watts	6.00 Metres	Galvanised Steel	
Y	24	STREET LIGHTING	COOPER ROAD	GRIMSBY	528590.44	409309.47	1991		46677	Urbis	Axia 16 LED 350mA	19 Watts	6.00 Metres	Galvanised Steel	
Y	25	STREET LIGHTING	COOPER ROAD	GRIMSBY	528615.63	409322.19	1991		46678	Urbis	Axia 16 LED 350mA	19 Watts	6.00 Metres	Galvanised Steel	
Y	26	STREET LIGHTING	COOPER ROAD	GRIMSBY	528637.66	409333.26	1991		46679	Urbis	Axia 16 LED 350mA	19 Watts	6.00 Metres	Galvanised Steel	
Y	27	STREET LIGHTING	COOPER ROAD	GRIMSBY	528664.37	409334.47	1991		46680	Urbis	Axia 16 LED 350mA	19 Watts	6.00 Metres	Galvanised Steel	
Y	28	STREET LIGHTING	COOPER ROAD	GRIMSBY	528684.87	409357.06	1991		46681	Urbis	Axia 16 LED 350mA	19 Watts	6.00 Metres	Galvanised Steel	
Y	29	STREET LIGHTING	COOPER ROAD	GRIMSBY	528711.07	409358.14	1991		46682	Urbis	Axia 16 LED 350mA	19 Watts	6.00 Metres	Galvanised Steel	
Y	1	STREET LIGHTING	DONNINGTON STREET	GRIMSBY	527908.11	409166.64	1986		47503	1 Urbis LED	Teceo 16 LED 500mA	28 Watts	6.00 Metres	Galvanised Steel	
Y	2	STREET LIGHTING	DONNINGTON STREET	GRIMSBY	527919.91	409130.34	2020	11/03/2020	67821	Urbis	Teceo 16 LED 500mA	25 Watts	6.00 Metres	Galvanised Steel	
Y	3	STREET LIGHTING	DONNINGTON STREET	GRIMSBY	527928.36	409094.83	1986		47505	1 Urbis LED	Teceo 16 LED 500mA	28 Watts	6.00 Metres	Galvanised Steel	
Y	4	STREET LIGHTING	DONNINGTON STREET	GRIMSBY	527937.57	409061.97	1986		47506	1 Urbis LED	Teceo 16 LED 500mA	28 Watts	6.00 Metres	Galvanised Steel	
Y	1	STREET LIGHTING	EDWARD STREET	GRIMSBY	527712.81	409332.24	2021	25/01/2021	68236	Urbis	Teceo 24 LED 500mA	40 Watts	6.00 Metres	Galvanised Steel	
Y	2	STREET LIGHTING	EDWARD STREET	GRIMSBY	527710.25	409299.95	1992		47862	1 Urbis LED	Teceo 24 LED 500mA	40 Watts	6.00 Metres	Galvanised Steel	
Y	3	STREET LIGHTING	EDWARD STREET	GRIMSBY	527717.22	409256.66	1992		47863	1 Urbis LED	Teceo 24 LED 500mA	40 Watts	6.00 Metres	Galvanised Steel	
Y	4	STREET LIGHTING	EDWARD STREET	GRIMSBY	527701.14	409225.65	1992		47864	1 Urbis LED	Teceo 24 LED 500mA	40 Watts	6.00 Metres	Galvanised Steel	
Y	5	STREET LIGHTING	EDWARD STREET	GRIMSBY	527710.12	409203.64	2003		47865	1 Urbis LED	Teceo 24 LED 500mA	40 Watts	6.00 Metres	Stainless Steel	
Y	6	STREET LIGHTING	EDWARD STREET	GRIMSBY	527695.11	409169	2003		47866	1 Urbis LED	Teceo 24 LED 500mA	40 Watts	6.00 Metres	Stainless Steel	
Y	7	STREET LIGHTING	EDWARD STREET	GRIMSBY	527702.69	409133.84	1996		47867	1 Urbis LED	Teceo 24 LED 500mA	40 Watts	6.00 Metres	Galvanised Steel	
Y	8	STREET LIGHTING	EDWARD STREET	GRIMSBY	527687.88	409110.41	2003		47868	1 Urbis LED	Teceo 24 LED 500mA	40 Watts	6.00 Metres	Stainless Steel	
Y	1	STREET LIGHTING	FRASER STREET	GRIMSBY	527990.45	409479.09	2002		48928	1 Urbis LED	Teceo 16 LED 500mA	28 Watts	6.00 Metres	Stainless Steel	
Y	2	STREET LIGHTING	FRASER STREET	GRIMSBY	527991.09	409450.38	2002		48929	1 Urbis LED	Teceo 16 LED 500mA	28 Watts	6.00 Metres	Stainless Steel	
Y	3	STREET LIGHTING	FRASER STREET	GRIMSBY	527973.29	409428.7	2002		48930	1 Urbis LED	Teceo 16 LED 500mA	28 Watts	6.00 Metres	Stainless Steel	
Y	4	STREET LIGHTING	FRASER STREET	GRIMSBY	527964.65	409404.33	2002		48931	1 Urbis LED	Teceo 16 LED 500mA	28 Watts	6.00 Metres	Stainless Steel	
Y	5	STREET LIGHTING	FRASER STREET	GRIMSBY	527955.38	409380.17	2002		48932	1 Urbis LED	Teceo 16 LED 500mA	28 Watts	6.00 Metres	Stainless Steel	
Y	6	STREET LIGHTING	FRASER STREET	GRIMSBY	527948.69	409356.21	2002		48933	1 Urbis LED	Teceo 16 LED 500mA	28 Watts	6.00 Metres	Stainless Steel	
Y	1	STREET LIGHTING	HARE STREET	GRIMSBY	527504.6	408753.73	1986		50169	1 Urbis LED	Teceo 16 LED 500mA	28 Watts	6.00 Metres	Galvanised Steel	
Y	2	STREET LIGHTING	HARE STREET	GRIMSBY	527540.87	408752.9	1986		50170	1 Urbis LED	Teceo 16 LED 500mA	28 Watts	6.00 Metres	Galvanised Steel	
Y	3	STREET LIGHTING	HARE STREET	GRIMSBY	527570.51	408772.23	1986		50171	1 Urbis LED	Teceo 16 LED 500mA	28 Watts	6.00 Metres	Galvanised Steel	
Y	4	STREET LIGHTING	HARE STREET	GRIMSBY	527602.73	408770.3	1986		50172	1 Urbis LED	Teceo 16 LED 500mA	28 Watts	6.00 Metres	Galvanised Steel	
Y	5	STREET LIGHTING	HARE STREET	GRIMSBY	527627.41	408788.34	1986		50173	1 Urbis LED	Teceo 16 LED 500mA	28 Watts	6.00 Metres	Galvanised Steel	
Y	6	STREET LIGHTING	HARE STREET	GRIMSBY	527664.6	408787.7	1986		50174	1 Urbis LED	Teceo 16 LED 500mA	28 Watts	6.00 Metres	Galvanised Steel	
Y	1	STREET LIGHTING	JULIAN STREET	GRIMSBY	527992.5	409191.01	1985		51459	1 Urbis LED	Teceo 16 LED 500mA	28 Watts	6.00 Metres	Galvanised Steel	
Y	2	STREET LIGHTING	JULIAN STREET	GRIMSBY	528026.93	409199.68	1985		51460	1 Urbis LED	Teceo 16 LED 500mA	28 Watts	6.00 Metres	Galvanised Steel	
Y	3	STREET LIGHTING	JULIAN STREET	GRIMSBY	528062.62	409217.72	1985		51461	1 Urbis LED	Teceo 16 LED 500mA	28 Watts	6.00 Metres	Galvanised Steel	
Y	4	STREET LIGHTING	JULIAN STREET	GRIMSBY	528090.97	409231.7	1985		51462	1 Urbis LED	Teceo 16 LED 500mA	28 Watts	6.00 Metres	Galvanised Steel	
Y	5	STREET LIGHTING	JULIAN STREET	GRIMSBY	528120.09	409246.07	1985		51463	1 Urbis LED	Teceo 16 LED 500mA	28 Watts	6.00 Metres	Galvanised Steel	
Y	6	STREET LIGHTING	JULIAN STREET	GRIMSBY	528144.77	409267.27	1985		51464	1 Urbis LED	Teceo 16 LED 500mA	28 Watts	6.00 Metres	Galvanised Steel	
Y	7	STREET LIGHTING	JULIAN STREET	GRIMSBY	528181.56	409276.86	2019	10/12/2019	67703	Urbis	Teceo 16 LED 500mA	28 Watts	6.00 Metres	Galvanised Steel	
Y	8	STREET LIGHTING	JULIAN STREET	GRIMSBY	528206.03	409298.16	1985		51466	1 Urbis LED	Teceo 16 LED 500mA	28 Watts	6.00 Metres	Galvanised Steel	
Y	9	STREET LIGHTING	JULIAN STREET	GRIMSBY	528245.78	409307.85	1985		51467	1 Urbis LED	Teceo 24 LED 500mA	40 Watts	6.00 Metres	Galvanised Steel	
Y	1	STREET LIGHTING	MARGARET STREET	GRIMSBY	527551.52	409105.34	1993		53255	1 Urbis LED	Teceo 24 LED 500mA	40 Watts	6.00 Metres	Galvanised Steel	
Y	2	STREET LIGHTING	MARGARET STREET	GRIMSBY	527576.2	409102.24	1993		53256	1 Urbis LED	Teceo 24 LED 500mA	40 Watts	6.00 Metres	Galvanised Steel	
Y	3	STREET LIGHTING	MARGARET STREET	GRIMSBY	527601.77	409089.59	1993		53257	1 Urbis LED	Teceo 24 LED 500mA	40 Watts	6.00 Metres	Galvanised Steel	
Y	1	STREET LIGHTING	ROPERY STREET	GRIMSBY	527884.54	409037.75	1968		56242	1 Urbis LED	Teceo 32 LED 500mA	52 Watts	6.00 Metres	Steel	
Y	2	STREET LIGHTING	ROPERY STREET	GRIMSBY	527920.02	409035.42	2006		56243	1 Urbis LED	Teceo 32 LED 500mA	52 Watts	8.00 Metres	Stainless Steel	
Y	3	STREET LIGHTING	ROPERY STREET	GRIMSBY	527945.67	409042.63	1990		56244	1 Urbis LED	Teceo 32 LED 500mA	52 Watts	6.00 Metres	Galvanised Steel	
Y	4	STREET LIGHTING	ROPERY STREET	GRIMSBY	527979.55	409064.27	1968		56245	1 Urbis LED	Teceo 32 LED 500mA	52 Watts	6.00 Metres	Steel	
Y	5	STREET LIGHTING	ROPERY STREET	GRIMSBY	528009.19	409066.57	1990		56246	1 Urbis LED	Teceo 32 LED 500mA	52 Watts	10.00 Metres	Galvanised Steel	
Y	1	STREET LIGHTING	SHEEPFOLD STREET	GRIMSBY	527379.96	409370.07	1968		57111	1 Urbis LED	Teceo 24 LED 500mA	40 Watts	5.00 Metres	Steel	
Y	2	STREET LIGHTING	SHEEPFOLD STREET	GRIMSBY	527374.07	409332.41	1985		57112	1 Urbis LED	Teceo 24 LED 500mA	40 Watts	5.00 Metres	Galvanised Steel	
Y	3	STREET LIGHTING	SHEEPFOLD STREET	GRIMSBY	527361	409313.17	1985		57113	1 Urbis LED	Teceo 48 LED 500mA	79 Watts	8.00 Metres	Galvanised Steel	
Y	4	STREET LIGHTING	SHEEPFOLD STREET	GRIMSBY	527355.29	409278.74	1985		57114	1 Urbis LED	Teceo 48 LED 500mA	79 Watts	8.00 Metres	Galvanised Steel	
Y	1	STREET LIGHTING	SIXHILLS STREET	GRIMSBY	527373	409264	2013		57251	1 Urbis LED	Axia 16 LED 500mA	28 Watts	6.00 Metres	Galvanised Steel	
Y	2	STREET LIGHTING	SIXHILLS STREET	GRIMSBY	527409.1	409248.89	1986		57252	1 Urbis LED	Axia 16 LED 500mA	28 Watts	6.00 Metres	Galvanised Steel	
Y	3	STREET LIGHTING	SIXHILLS STREET	GRIMSBY	527443.72	409253.21	1986		57253	1 Urbis LED	Axia 16 LED 500mA	28 Watts	5.00 Metres	Galvanised Steel	
Y	4	STREET LIGHTING	SIXHILLS STREET	GRIMSBY	527465.44	409241.06	1986		57254	1 Urbis LED	Axia 16 LED 500mA	28 Watts	5.00 Metres	Galvanised Steel	
Y	5	STREET LIGHTING	SIXHILLS STREET	GRIMSBY	527491.05	409246.86	2003		57255	1 Urbis LED	Axia 16 LED 500mA	28 Watts	6.00 Metres	Stainless Steel	
Y	6	STREET LIGHTING	SIXHILLS STREET	GRIMSBY	527504.01	409237.71	2019	16/05/2019	67381	Urbis	Axia 16 LED 500mA	28 Watts	6.00 Metres	Galvanised Steel	
Y	7	STREET LIGHTING	SIXHILLS STREET	GRIMSBY	527565.01	409235.25	2003		57257	1 Urbis LED	Axia 16 LED 500mA	28 Watts	6.00 Metres	Stainless Steel	
Y	8	STREET LIGHTING	SIXHILLS STREET	GRIMSBY	527596.98	409223.24	1993		57258	1 Urbis LED	Axia 16 LED 500mA	28 Watts	6.00 Metres	Galvanised Steel	
Y	9	STREET LIGHTING	SIXHILLS STREET	GRIMSBY	527619.7	409219.55	2003		57259	1 Urbis LED	Teceo 16 LED 500mA	28 Watts	6.00 Metres	Stainless Steel	
Y	10	STREET LIGHTING	SIXHILLS STREET	GRIMSBY	527649.46	409226.79	2018	16/08/2018	67049	Urbis	Axia 16 LED 500mA	28 Watts	6.00 Metres	Galvanised Steel	
Y	11	STREET LIGHTING	SIXHILLS STREET	GRIMSBY	527668.86	409213.88	1986		57261	1 Urbis LED	Axia 16 LED 500mA	28 Watts	6.00 Metres	Galvanised Steel	
Y	12	STREET LIGHTING	SIXHILLS STREET	GRIMSBY	527689.04	409209.9	2003		57262	1 Urbis LED	Axia 16 LED 500mA	28 Watts	6.00 Metres	Stainless Steel	
Y	13	STREET LIGHTING	SIXHILLS STREET	GRIMSBY	527718.36	409215.39	2003		57263	1 Urbis LED	Axia 16 LED 500mA	28 Watts	6.00 Metres	Stainless Steel	
Y	14	STREET LIGHTING	SIXHILLS STREET	GRIMSBY	527750.74	409210.46	2003		57264	1 Urbis LED	Axia 16 LED 500mA	28 Watts	6.00 Metres	Stainless Steel	
Y	15	STREET LIGHTING	SIXHILLS STREET	GRIMSBY	527775.65	409198.68	2003		57265	1 Urbis LED	Axia 16 LED 500mA	28 Watts	6.00 Metres	Stainless Steel	
Y	16	STREET LIGHTING	SIXHILLS STREET	GRIMSBY	527804.36	409203.87	2003		57266	1 Urbis LED	Axia 16 LED 500mA	28 Watts	6.00 Metres	Stainless Steel	
Y	17	STREET LIGHTING	SIXHILLS STREET	GRIMSBY	527827.81	409192.05	2003		57267	1 Urbis LED	Axia 16 LED 500mA	28 Watts	6.00 Metres	Stainless Steel	
Y	18	STREET LIGHTING	SIXHILLS STREET	GRIMSBY	527856.28	409196.66	1986		57268	1 Urbis LED	Axia 16 LED 500mA	28 Watts	6.00 Metres	Galvanised Steel	
Y	19	STREET LIGHTING	SIXHILLS STREET	GRIMSBY	527887.07	409183.24	1986		57269	1 Urbis LED	Axia 16 LED 500mA	28 Watts	6.00 Metres	Galvanised Steel	
Y	20	STREET LIGHTING	SIXHILLS STREET	GRIMSBY	527904.75	409189.59	1986		57270	1 Urbis LED	Axia 16 LED 500mA	28 Watts	6.00 Metres	Galvanised Steel	
Y	21	STREET LIGHTING	SIXHILLS STREET	GRIMSBY	527936.42	409176.52	1986		57271	1 Urbis LED	Axia 16 LED 500mA	28 Watts	6.00 Metres	Galvanised Steel	
Y	22	STREET LIGHTING	SIXHILLS STREET	GRIMSBY	527966.8	409185.36	1986		57272	1 Urbis LED	Axia 16 LED 500mA	28 Watts	6.00 Metres	Galvanised Steel	
Y	1	STREET LIGHTING	THOMAS STREET	GRIMSBY	527809.49	409311.47	1985		59093	1 Urbis LED	Axia 16 LED 500mA	28 Watts	6.00 Metres	Galvanised Steel	
Y	2	STREET LIGHTING	THOMAS STREET	GRIMSBY	527795.44	409293.81	1985		59094	1 Urbis LED	Axia 16 LED 500mA	28 Watts	6.00 Metres	Galvanised Steel	
Y	3	STREET LIGHTING	THOMAS STREET	GRIMSBY	527803.8	409262.67	1985		59095	1 Urbis LED	Axia 16 LED 500mA	28 Watts	6.00 Metres	Galvanised Steel	
Y	4	STREET LIGHTING	THOMAS STREET	GRIMSBY	527800.51	409233.87	1985		59096	1 Urbis LED	Axia 16 LED 500mA	28 Watts	6.00 Metres	Galvanised Steel	
Y	5	STREET LIGHTING	THOMAS STREET	GRIMSBY	527786.58	409216.28	1985		59097	1 Urbis LED	Axia 16 LED 500mA	28 Watts	6.00 Metres	Galvanised Steel	
Y	1	STREET LIGHTING	WEELSBY STREET SOUTH	GRIMSBY	528091.84	409445.47	2012		60063	1 Urbis LED	Axia 16 LED 500mA	28 Watts	6.00 Metres	Galvanised Steel	
Y	2	STREET LIGHTING	WEELSBY STREET SOUTH	GRIMSBY	528082.72	409414.77	2012		60064	1 Urbis LED	Axia 16 LED 500mA	28 Watts	6.00 Metres	Galvanised Steel	
Y	3	STREET LIGHTING	WEELSBY STREET SOUTH	GRIMSBY	528094.75	409379.42	2012		60065	1 Urbis LED	Axia 16 LED 500mA	28 Watts	6.00 Metres	Galvanised Steel	
Y	4	STREET LIGHTING	WEELSBY STREET SOUTH	GRIMSBY	528084.88	409351.58	2012		60066	1 Urbis LED	Axia 16 LED 500mA	28 Watts	6.00 Metres	Galvanised Steel	
Y	5	STREET LIGHTING	WEELSBY STREET SOUTH	GRIMSBY	528101.84	409328.42	2012		60067	1 Urbis LED	Axia 16 LED 500mA	28 Watts	6.00 Metres	Galvanised Steel	
Y	6	STREET LIGHTING	WEELSBY STREET SOUTH	GRIMSBY	528105.26	409297.09	2012		60068	1 Urbis LED	Axia 16 LED 500mA	28 Watts	6.00 Metres	Galvanised Steel	
Y	7	STREET LIGHTING	WEELSBY STREET SOUTH	GRIMSBY	528120.45	409267.34	2012		60069	1 Urbis LED	Axia 16 LED 500mA	28 Watts	6.00 Metres	Galvanised Steel	
Y	8	STREET LIGHTING	WEELSBY STREET SOUTH	GRIMSBY	528143.11	409246.4	2012		60070	1 Urbis LED	Axia 16 LED 500mA	28 Watts	6.00 Metres	Galvanised Steel	
Y	9	STREET LIGHTING	WEELSBY STREET SOUTH	GRIMSBY	528147.16	409214.18	2012		60071	1 Urbis LED	Axia 16 LED 500mA	28 Watts	6.00 Metres	Galvanised Steel	
Y	10	STREET LIGHTING	WEELSBY STREET SOUTH	GRIMSBY	528162.35	409183.8	2012		60072	1 Urbis LED	Axia 16 LED 500mA	28 Watts	5.00 Metres	Steel	

Y	11	STREET LIGHTING	WEELSBY STREET SOUTH	GRIMSBY	528175.47	409158.27	2012		60073	1 Urbis LED	Axia 16 LED 500mA	28 Watts	6.00 Metres	Steel	
Y	12	STREET LIGHTING	WEELSBY STREET SOUTH	GRIMSBY	528191.13	409126.95	2012		60074	1 Urbis LED	Axia 16 LED 500mA	28 Watts	6.00 Metres	Steel	
Y	13	STREET LIGHTING	WEELSBY STREET SOUTH	GRIMSBY	528214.5	409080.39	2017		60075	1 Urbis LED	Axia 16 LED 500mA	28 Watts	6.00 Metres	Galvanised Steel	
Y	14	STREET LIGHTING	WEELSBY STREET SOUTH	GRIMSBY	528235.58	409061.87	2012		60076	1 Urbis LED	Axia 16 LED 500mA	28 Watts	6.00 Metres	Steel	
Y	15	STREET LIGHTING	WEELSBY STREET SOUTH	GRIMSBY	528249.05	409035.46	2012		60080	1 Urbis LED	Axia 16 LED 500mA	28 Watts	6.00 Metres	Galvanised Steel	
Y	16	STREET LIGHTING	WEELSBY STREET SOUTH	GRIMSBY	528255.51	408998.75	2012		60077	1 Urbis LED	Axia 16 LED 500mA	28 Watts	6.00 Metres	Galvanised Steel	
Y	17	STREET LIGHTING	WEELSBY STREET SOUTH	GRIMSBY	528271.21	408967.99	2012		60078	1 Urbis LED	Axia 16 LED 500mA	28 Watts	6.00 Metres	Galvanised Steel	
Y	18	STREET LIGHTING	WEELSBY STREET SOUTH	GRIMSBY	528294.5	408945.21	2012		60079	1 Urbis LED	Axia 16 LED 500mA	28 Watts	6.00 Metres	Galvanised Steel	
Y	1	STREET LIGHTING	WILLINGHAM STREET	GRIMSBY	527516.11	409486.95	2003		60708	1 Urbis LED	Axia 16 LED 500mA	28 Watts	6.00 Metres	Stainless Steel	
Y	2	STREET LIGHTING	WILLINGHAM STREET	GRIMSBY	527511.51	409452.8	2003		60709	1 Urbis LED	Axia 16 LED 500mA	28 Watts	5.00 Metres	Stainless Steel	
Y	3	STREET LIGHTING	WILLINGHAM STREET	GRIMSBY	527498.62	409420.02	2003		60710	1 Urbis LED	Axia 16 LED 500mA	28 Watts	5.00 Metres	Stainless Steel	
Y	4	STREET LIGHTING	WILLINGHAM STREET	GRIMSBY	527494.57	409388.63	2003		60711	1 Urbis LED	Axia 16 LED 500mA	28 Watts	5.00 Metres	Stainless Steel	
Y	5	STREET LIGHTING	WILLINGHAM STREET	GRIMSBY	527500.26	409363.11	2003		60712	1 Urbis LED	Axia 16 LED 500mA	28 Watts	5.00 Metres	Stainless Steel	
Y	6	STREET LIGHTING	WILLINGHAM STREET	GRIMSBY	527487.35	409332.48	2003		60713	1 Urbis LED	Axia 16 LED 500mA	28 Watts	5.00 Metres	Stainless Steel	
Y	7	STREET LIGHTING	WILLINGHAM STREET	GRIMSBY	527492.54	409301.66	2003		60714	1 Urbis LED	Axia 16 LED 500mA	28 Watts	5.00 Metres	Stainless Steel	
Y	8	STREET LIGHTING	WILLINGHAM STREET	GRIMSBY	527480.12	409278.7	2003		60715	1 Urbis LED	Axia 16 LED 500mA	28 Watts	5.00 Metres	Stainless Steel	
Y	9	STREET LIGHTING	WILLINGHAM STREET	GRIMSBY	527477.1	409253.62	2003		60716	1 Urbis LED	Axia 16 LED 500mA	28 Watts	5.00 Metres	Stainless Steel	
Y	10	STREET LIGHTING	WILLINGHAM STREET	GRIMSBY	527482.05	409223.81	2003		60717	1 Urbis LED	Axia 16 LED 500mA	28 Watts	5.00 Metres	Stainless Steel	
Y	11	STREET LIGHTING	WILLINGHAM STREET	GRIMSBY	527469.17	409196.74	2003		60718	1 Urbis LED	Axia 16 LED 500mA	28 Watts	5.00 Metres	Stainless Steel	
Y	12	STREET LIGHTING	WILLINGHAM STREET	GRIMSBY	527466.07	409169.36	2003		60719	1 Urbis LED	Axia 16 LED 500mA	28 Watts	5.00 Metres	Stainless Steel	
Y	13	STREET LIGHTING	WILLINGHAM STREET	GRIMSBY	527461.48	409137.71	2003		60720	1 Urbis LED	Axia 16 LED 500mA	28 Watts	5.00 Metres	Stainless Steel	
Y	14	STREET LIGHTING	WILLINGHAM STREET	GRIMSBY	527457.34	409107.09	2003		60721	1 Urbis LED	Axia 16 LED 500mA	28 Watts	5.00 Metres	Stainless Steel	
Y	15	STREET LIGHTING	WILLINGHAM STREET	GRIMSBY	527452.75	409073.94	2003		60722	1 Urbis LED	Axia 16 LED 500mA	28 Watts	6.00 Metres	Stainless Steel	
Y	16	STREET LIGHTING	WILLINGHAM STREET	GRIMSBY	527457.4	409038.54	2003		60723	1 Urbis LED	Axia 16 LED 500mA	28 Watts	6.00 Metres	Stainless Steel	
Y	17	STREET LIGHTING	WILLINGHAM STREET	GRIMSBY	527445.65	409011.22	2003		60724	1 Urbis LED	Axia 16 LED 500mA	28 Watts	5.00 Metres	Stainless Steel	
Y	18	STREET LIGHTING	WILLINGHAM STREET	GRIMSBY	527440.46	408979.04	2003		60725	1 Urbis LED	Axia 16 LED 500mA	28 Watts	5.00 Metres	Stainless Steel	
Y	19	STREET LIGHTING	WILLINGHAM STREET	GRIMSBY	527446.14	408949.09	2003		60726	1 Urbis LED	Axia 16 LED 500mA	28 Watts	5.00 Metres	Stainless Steel	
Y	20	STREET LIGHTING	WILLINGHAM STREET	GRIMSBY	527432.3	408915.98	2003		60727	1 Urbis LED	Axia 16 LED 500mA	28 Watts	5.00 Metres	Stainless Steel	
Y	21	STREET LIGHTING	WILLINGHAM STREET	GRIMSBY	527437.74	408883.75	2003		60728	1 Urbis LED	Axia 16 LED 500mA	28 Watts	5.00 Metres	Stainless Steel	
Y	22	STREET LIGHTING	WILLINGHAM STREET	GRIMSBY	527424.14	408848.84	2003		60729	1 Urbis LED	Axia 16 LED 500mA	28 Watts	5.00 Metres	Stainless Steel	
Y	23	STREET LIGHTING	WILLINGHAM STREET	GRIMSBY	527420.71	408818.38	2003		60730	1 Urbis LED	Axia 16 LED 500mA	28 Watts	5.00 Metres	Stainless Steel	
Y	24	STREET LIGHTING	WILLINGHAM STREET	GRIMSBY	527414.8	408781.04	2003		60731	1 Urbis LED	Axia 16 LED 500mA	28 Watts	5.00 Metres	Stainless Steel	
Y	25	STREET LIGHTING	WILLINGHAM STREET	GRIMSBY	527413.08	408763.98	2003		60732	1 Urbis LED	Axia 16 LED 500mA	28 Watts	5.00 Metres	Stainless Steel	
Y	26	STREET LIGHTING	WILLINGHAM STREET	GRIMSBY	527412.91	408732.92	2003		60733	1 Urbis LED	Axia 16 LED 500mA	28 Watts	5.00 Metres	Stainless Steel	
Y	27	STREET LIGHTING	WILLINGHAM STREET	GRIMSBY	527429.48	408700.68	2003		60734	1 Urbis LED	Axia 16 LED 500mA	28 Watts	5.00 Metres	Stainless Steel	
Y	28	STREET LIGHTING	WILLINGHAM STREET	GRIMSBY	527435.12	408681.01	2003		60735	1 Urbis LED	Axia 16 LED 500mA	28 Watts	5.00 Metres	Stainless Steel	
Y	29	STREET LIGHTING	WILLINGHAM STREET	GRIMSBY	527432.04	408657.17	2003		60736	1 Urbis LED	Axia 16 LED 500mA	28 Watts	5.00 Metres	Stainless Steel	
Y	1	STREET LIGHTING	WRAGBY STREET	GRIMSBY	527885.95	409366.69	2002		61254	1 Urbis LED	Axia 16 LED 500mA	28 Watts	6.00 Metres	Stainless Steel	
Y	2	STREET LIGHTING	WRAGBY STREET	GRIMSBY	527914.25	409347.52	2002		61255	1 Urbis LED	Axia 16 LED 500mA	28 Watts	6.00 Metres	Stainless Steel	
Y	3	STREET LIGHTING	WRAGBY STREET	GRIMSBY	527940.84	409336.98	2002		61256	1 Urbis LED	Axia 16 LED 500mA	28 Watts	6.00 Metres	Stainless Steel	
Y	1	STREET LIGHTING	TASBURGH STREET	GRIMSBY	527519.12	408833.69	1988		58748	1 Urbis LED	Axia 16 LED 500mA	28 Watts	6.00 Metres	Galvanised Steel	
Y	2	STREET LIGHTING	TASBURGH STREET	GRIMSBY	527544.94	408840.65	1988		58749	1 Urbis LED	Axia 16 LED 500mA	28 Watts	6.00 Metres	Galvanised Steel	
Y	3	STREET LIGHTING	TASBURGH STREET	GRIMSBY	527585.2	408839.83	1988		58750	1 Urbis LED	Axia 16 LED 500mA	28 Watts	6.00 Metres	Galvanised Steel	
Y	4	STREET LIGHTING	TASBURGH STREET	GRIMSBY	527611.02	408859.58	1988		58751	1 Urbis LED	Axia 16 LED 500mA	28 Watts	6.00 Metres	Galvanised Steel	
Y	5	STREET LIGHTING	TASBURGH STREET	GRIMSBY	527643.42	408856.41	1988		58752	1 Urbis LED	Axia 16 LED 500mA	28 Watts	6.00 Metres	Galvanised Steel	
Y	1	STREET LIGHTING	FOOTPATH BETWEEN TASBURGH	GRIMSBY	527560.61	408891.08	2018	17/09/2018	67124	Urbis	Axia 16 LED 350mA	19 Watts	6.00 Metres	Galvanised Steel	
Y	2	STREET LIGHTING	FOOTPATH BETWEEN TASBURGH	GRIMSBY	527595.89	408903.04	2018	17/09/2018	67217	Urbis	Axia 16 LED 350mA	19 Watts	6.00 Metres	Galvanised Steel	
Y	1	STREET LIGHTING	HENEAGE ROAD	GRIMSBY	527832.65	409696.32	2021	06/09/2021	68439	Urbis	Teceo 48 LED 500mA	79 Watts	8.00 Metres	Galvanised Steel	
Y	2	STREET LIGHTING	HENEAGE ROAD	GRIMSBY	527820.73	409660.59	2017		50489	1 Urbis LED	Teceo 48 LED 500mA	79 Watts	8.00 Metres	Galvanised Steel	
Y	3	STREET LIGHTING	HENEAGE ROAD	GRIMSBY	527809.49	409625.43	2017		50490	1 Urbis LED	Teceo 48 LED 500mA	79 Watts	8.00 Metres	Galvanised Steel	
Y	4	STREET LIGHTING	HENEAGE ROAD	GRIMSBY	527796.05	409595.6	2002		50491	1 Urbis LED	Teceo 48 LED 500mA	79 Watts	8.00 Metres	Stainless Steel	
Y	5	STREET LIGHTING	HENEAGE ROAD	GRIMSBY	527778.56	409567.61	1993		50492	1 Urbis LED	Teceo 48 LED 500mA	79 Watts	8.00 Metres	Steel	
Y	6	STREET LIGHTING	HENEAGE ROAD	GRIMSBY	527755.55	409551.69	1993		50493	1 Urbis LED	Teceo 48 LED 500mA	79 Watts	8.00 Metres	Steel	
Y	7	STREET LIGHTING	HENEAGE ROAD	GRIMSBY	527756.47	409530.33	1993		50494	1 Urbis LED	Teceo 48 LED 500mA	79 Watts	10.00 Metres	Galvanised Steel	
Y	8	STREET LIGHTING	HENEAGE ROAD	GRIMSBY	527729.59	409509.52	1993		50495	1 Urbis LED	Teceo 48 LED 500mA	79 Watts	10.00 Metres	Galvanised Steel	
Y	9	STREET LIGHTING	HENEAGE ROAD	GRIMSBY	527716.52	409470.12	1993		50496	1 Urbis LED	Teceo 48 LED 500mA	79 Watts	8.00 Metres	Steel	
Y	10	STREET LIGHTING	HENEAGE ROAD	GRIMSBY	527682	409440	2001		50497	1 Urbis LED	Teceo 48 LED 500mA	79 Watts	8.00 Metres	Galvanised Steel	
Y	11	STREET LIGHTING	HENEAGE ROAD	GRIMSBY	527666.55	409396.94	1993		50498	1 Urbis LED	Teceo 48 LED 500mA	79 Watts	8.00 Metres	Steel	
Y	12	STREET LIGHTING	HENEAGE ROAD	GRIMSBY	527646.81	409373.97	1993		50499	1 Urbis LED	Teceo 48 LED 500mA	79 Watts	10.00 Metres	Galvanised Steel	
Y	13	STREET LIGHTING	HENEAGE ROAD	GRIMSBY	527653.52	409334.73	1993		50500	1 Urbis LED	Teceo 48 LED 500mA	79 Watts	10.00 Metres	Galvanised Steel	
Y	14	STREET LIGHTING	HENEAGE ROAD	GRIMSBY	527648.69	409308.26	1993		50501	1 Urbis LED	Teceo 48 LED 500mA	79 Watts	8.00 Metres	Steel	
Y	15	STREET LIGHTING	HENEAGE ROAD	GRIMSBY	527645	409271	2001		50502	1 Urbis LED	Teceo 48 LED 500mA	79 Watts	8.00 Metres	Galvanised Steel	
Y	16	STREET LIGHTING	HENEAGE ROAD	GRIMSBY	527637.46	409227.16	1993		50503	1 Urbis LED	Teceo 48 LED 500mA	79 Watts	8.00 Metres	Steel	
Y	17	STREET LIGHTING	HENEAGE ROAD	GRIMSBY	527623.65	409183.06	1993		50504	1 Urbis LED	Teceo 48 LED 500mA	79 Watts	8.00 Metres	Steel	
Y	18	STREET LIGHTING	HENEAGE ROAD	GRIMSBY	527627.33	409140.16	1993		50505	1 Urbis LED	Teceo 48 LED 500mA	79 Watts	8.00 Metres	Steel	
Y	19	STREET LIGHTING	HENEAGE ROAD	GRIMSBY	527612.1	409101.41	2021	25/01/2021	68238	Urbis	Teceo 48 LED 500mA	79 Watts	8.00 Metres	Galvanised Steel	
Y	20	STREET LIGHTING	HENEAGE ROAD	GRIMSBY	527617.2	409058.23	1993		50507	1 Urbis LED	Teceo 48 LED 500mA	79 Watts	8.00 Metres	Steel	
Y	21	STREET LIGHTING	HENEAGE ROAD	GRIMSBY	527610.74	409028.27	2021	25/01/2021	68448	Urbis	Teceo 48 LED 500mA	79 Watts	8.00 Metres	Galvanised Steel	
Y	22	STREET LIGHTING	HENEAGE ROAD	GRIMSBY	527629.97	408986.98	1993		50509	1 Urbis LED	Teceo 48 LED 500mA	79 Watts	8.00 Metres	Steel	
Y	23	STREET LIGHTING	HENEAGE ROAD	GRIMSBY	527630.89	408949.33	1993		50510	1 Urbis LED	Teceo 48 LED 500mA	79 Watts	8.00 Metres	Steel	
Y	24	STREET LIGHTING	HENEAGE ROAD	GRIMSBY	527649.49	408917.2	1993		50511	Urbis	AXIA 3.2 32 LED 630 mA	62 Watts	8.00 Metres	Steel	
Y	25	STREET LIGHTING	HENEAGE ROAD	GRIMSBY	527661.46	408873.38	1998		50512	1 Urbis LED	Teceo 48 LED 500mA	79 Watts	8.00 Metres	Galvanised Steel	
Y	26	STREET LIGHTING	HENEAGE ROAD	GRIMSBY	527664.03	408830.38	1993		50513	1 Urbis LED	Teceo 48 LED 500mA	79 Watts	8.00 Metres	Steel	
Y	27	STREET LIGHTING	HENEAGE ROAD	GRIMSBY	527680.61	408770.42	2023	23/05/2023	69256	Urbis	Teceo 48 LED 500mA	79 Watts	8.00 Metres	Galvanised Steel	
Y	28	STREET LIGHTING	HENEAGE ROAD	GRIMSBY	527693.81	408763.56	2008		50515	Urbis	AXIA 3.2 32 LED 630 mA	62 Watts	8.00 Metres	Steel	
Y	29	STREET LIGHTING	HENEAGE ROAD	GRIMSBY	527702.95	408729.83	2008		50516	1 Urbis LED	Teceo 48 LED 500mA	79 Watts	8.00 Metres	Steel	
Y	30	STREET LIGHTING	HENEAGE ROAD	GRIMSBY	527710.25	408703.43	1993		50517	1 Urbis LED	Teceo 48 LED 500mA	79 Watts	8.00 Metres	Galvanised Steel	
Y	31	STREET LIGHTING	HENEAGE ROAD	GRIMSBY	527719.82	408670.11	1993		50518	1 Urbis LED	Teceo 48 LED 500mA	79 Watts	8.00 Metres	Galvanised Steel	
Y	32	STREET LIGHTING	HENEAGE ROAD	GRIMSBY	527716.51	408637.79	1993		50519	1 Urbis LED	Teceo 48 LED 500mA	79 Watts	8.00 Metres	Galvanised Steel	
Y	33	STREET LIGHTING	HENEAGE ROAD	GRIMSBY	527736.21	408610.27	1993		50520	1 Urbis LED	Teceo 48 LED 500mA	79 Watts	8.00 Metres	Galvanised Steel	
Y	34	STREET LIGHTING	HENEAGE ROAD	GRIMSBY	527745	408579	2001		50521	1 Urbis LED	Teceo 48 LED 500mA	79 Watts	8.00 Metres	Galvanised Steel	
Y	35	STREET LIGHTING	HENEAGE ROAD	GRIMSBY	527739	408544	2001		50522	1 Urbis LED	Teceo 48 LED 500mA	79 Watts	8.00 Metres	Galvanised Steel	
Y	36	STREET LIGHTING	HENEAGE ROAD	GRIMSBY	527750.18	408516.75	2008		50523	1 Urbis LED	Teceo 48 LED 500mA	79 Watts	8.00 Metres	Steel	
Y	37	STREET LIGHTING	HENEAGE ROAD	GRIMSBY	527768.43	408489.3	1993		50524	1 Urbis LED	Teceo 48 LED 500mA	79 Watts	8.00 Metres	Steel	
Y	38	STREET LIGHTING	HENEAGE ROAD	GRIMSBY	527769.9	408451.92	1993		50525	1 Urbis LED	Teceo 48 LED 500mA	79 Watts	8.00 Metres	Steel	
Y	39	STREET LIGHTING	HENEAGE ROAD	GRIMSBY	527789.79	408412.43	1993		50526	1 Urbis LED	Teceo 48 LED 500mA	79 Watts	8.00 Metres	Steel	
Y	40	STREET LIGHTING	HENEAGE ROAD	GRIMSBY	527792.55	408370.45	2017		50527	1 Urbis LED	Teceo 48 LED 500mA	79 Watts	8.00 Metres	Galvanised Steel	
Y	41	STREET LIGHTING	HENEAGE ROAD	GRIMSBY	527812.62	408330.77	1993		50528	1 Urbis LED	Teceo 48 LED 500mA	79 Watts	8.00 Metres	Steel	
Y	42	STREET LIGHTING	HENEAGE ROAD	GRIMSBY	527815.93	408287.5	1993		50529	1 Urbis LED	Teceo 48 LED 500mA	79 Watts	8.00 Metres	Steel	
Y	43	STREET LIGHTING	HENEAGE ROAD	GRIMSBY	527836	408246.17	1993		50530	1 Urbis LED	Teceo 48 LED 500mA	79 Watts	8.00 Metres	Steel	
Y	44	STREET LIGHTING	HENEAGE ROAD	GRIMSBY	527852	408197	2001		50531	1 Urbis LED	Teceo 48 LED 500mA	79 Watts	8.00 Metres	Galvanised Steel	
Y	45	STREET LIGHTING	HENEAGE ROAD	GRIMSBY	527848.71	408169.11	1993		50532	1 Urbis LED	Teceo 48 LED 500mA	79 Watts	8.00 Metres	Steel	
Y	46	STREET LIGHTING	HENEAGE ROAD	GRIMSBY	527866.94	408136.99	1993		50533	1 Urbis LED	Teceo 48 LED 500mA	79 Watts	8.00 Metres	Steel	
Y	47	STREET LIGHTING	HENEAGE ROAD	GRIMSBY	527867.3	408102.46	1993		50534	1 Urbis LED	Teceo 48 LED 500mA	79 Watts	8.00 Metres	Steel	
Y	1	STREET LIGHTING	MALLARD MEWS	GRIMSBY	527412.68	408814.42	2007		53107	Urbis	Axia 16 LED 350mA	19 Watts	6.00 Metres	Galvanised Steel	
Y	2	STREET LIGHTING	MALLARD MEWS	GRIMSBY	527377.87	408821.56	2021	09/08/2021	68620	Urbis	Axia 16 LED 350mA	19 Watts	6.00 Metres	Galvanised Steel	
Y	3	STREET LIGHTING	MALLARD MEWS	GRIMSBY	527362.91	408825.07	1993		53109	Urbis	Axia 16 LED 350mA	19 Watts	6.00 Metres	Galvanised Steel	
Y	4	STREET LIGHTING	MALLARD MEWS	GRIMSBY	527361.77	408842.47	1993		53110	Urbis	Axia 16 LED 350mA	19 Watts	6.00 Metres	Galvanised Steel	
Y	5	STREET LIGHTING	MALLARD MEWS	GRIMSBY	527364.81	408865.83	1993		53111	Urbis	Axia 16 LED 350mA	19 Watts	6.00 Metres	Galvanised Steel	
Y	6	STREET LIGHTING	MALLARD MEWS	GRIMSBY	527367.09	408884.12	1993		53112	Urbis	Axia 16 LED 350mA	19 Watts	6.00 Metres	Galvanised Steel	
Y	7	STREET LIGHTING	MALLARD MEWS	GRIMSBY	527352.41	408914.37	1993		53113	Urbis	Axia 16 LED 350mA	19 Watts	6.00 Metres	Galvanised Steel	
Y	8	STREET LIGHTING	MALLARD MEWS	GRIMSBY	527372.66	408919.56	1992		53114	Urbis	Axia 8 LED 350mA	10 Watts	5.00 Metres	Galvanised Steel	
Y	9	STREET LIGHTING	MALLARD MEWS	GRIMSBY	527390.25	408923.3	1992		53115	Urbis	Axia 8 LED 350mA	10 Watts	5.00 Metres	Galvanised Steel	
Y	10	STREET LIGHTING	MALLARD MEWS	GRIMSBY	527376.21	408906.65	1992		53116	Urbis	Axia 16 LED 350mA	19 Watts	6.00 Metres	Galvanised Steel	
Y	11	STREET LIGHTING	MALLARD MEWS	GRIMSBY	527372.23	408930.98	1992		53117	Urbis	Axia 8 LED 350mA	10 Watts	5.00 Metres	Galvanised Steel	
Y	12	STREET LIGHTING	MALLARD MEWS	GRIMSBY	527357.04	408937.25	1992		53118	Urbis	Axia 8 LED 350mA	10 Watts	5.00 Metres	Galvanised Steel	
Y	13	STREET LIGHTING	MALLARD MEWS	GRIMSBY	527379.53	408893.53	2011		53119	Urbis	Axia 16 LED 350mA	19 Watts	6.00 Metres	Steel	
Y	1	STREET LIGHTING	CONVAMORE ROAD	GRIMSBY	527972.94	409654.74	1986		46579	1 Urbis LED	Teceo 40 LED 500mA	64 Watts	10.00 Metres	Galvanised Steel	
Y	2	STREET LIGHTING	CONVAMORE ROAD	GRIMSBY	527953.42	409629.61	1986		46580	1 Urbis LED	Teceo 40 LED 500mA	64 Watts	10.00 Metres	Galvanised Steel	
Y	3	STREET LIGHTING	CONVAMORE ROAD	GRIMSBY	527937.64	409591.12	1986		46581	1 Urbis LED	Teceo 40 LED 500mA	64 Watts	10.00 Metres	Galvanised Steel	

Y	4	STREET LIGHTING	CONVAMORE ROAD	GRIMSBY	527942.18	409560.21	2023	22/09/2023	69303	Urbis	Teceo 40 LED 500mA	64 Watts	12.00 Metres	Galvanised Steel	
Y	5	STREET LIGHTING	CONVAMORE ROAD	GRIMSBY	527917.15	409529.27	1986		46583	1 Urbis LED	Teceo 40 LED 500mA	64 Watts	10.00 Metres	Galvanised Steel	
Y	6	STREET LIGHTING	CONVAMORE ROAD	GRIMSBY	527930.41	409526.14	1986		46584	1 Urbis LED	Teceo 40 LED 500mA	64 Watts	10.00 Metres	Galvanised Steel	
Y	7	STREET LIGHTING	CONVAMORE ROAD	GRIMSBY	527925.99	409503.95	1986		46585	1 Urbis LED	Teceo 40 LED 500mA	64 Watts	10.00 Metres	Galvanised Steel	
Y	8	STREET LIGHTING	CONVAMORE ROAD	GRIMSBY	527904.15	409488.52	2019	17/01/2019	67260	Urbis	Teceo 40 LED 500mA	64 Watts	12.00 Metres	Galvanised Steel	
Y	9	STREET LIGHTING	CONVAMORE ROAD	GRIMSBY	527904.81	409456.45	1986		46587	1 Urbis LED	Teceo 40 LED 500mA	64 Watts	10.00 Metres	Galvanised Steel	
Y	10	STREET LIGHTING	CONVAMORE ROAD	GRIMSBY	527884.56	409432.98	1986		46588	1 Urbis LED	Teceo 40 LED 500mA	64 Watts	10.00 Metres	Galvanised Steel	
Y	11	STREET LIGHTING	CONVAMORE ROAD	GRIMSBY	527884.19	409398.46	1986		46589	1 Urbis LED	Teceo 40 LED 500mA	64 Watts	10.00 Metres	Galvanised Steel	
Y	12	STREET LIGHTING	CONVAMORE ROAD	GRIMSBY			2024	19/11/2024	70027	Urbis	Teceo 40 LED 500mA	64 Watts	12.00 Metres	Galvanised Steel	
Y	13	STREET LIGHTING	CONVAMORE ROAD	GRIMSBY	527872.41	409352.24	1986		46591	1 Urbis LED	Teceo 40 LED 500mA	64 Watts	10.00 Metres	Galvanised Steel	
Y	14	STREET LIGHTING	CONVAMORE ROAD	GRIMSBY	527851.05	409337.05	1946		61555	1 Urbis LED	Teceo 40 LED 500mA	64 Watts	8.00 Metres	Steel	
Y	14	STREET LIGHTING	CONVAMORE ROAD	GRIMSBY	527851.05	409337.05	1946		62087	1 Urbis LED	Teceo 40 LED 500mA	64 Watts	8.00 Metres	Steel	
Y	15	STREET LIGHTING	CONVAMORE ROAD	GRIMSBY	527868.91	409329.6	1946		46592	1 Urbis LED	Teceo 40 LED 500mA	64 Watts	8.00 Metres	Steel	
Y	16	STREET LIGHTING	CONVAMORE ROAD	GRIMSBY	527857.86	409300.88	1946		46593	1 Urbis LED	Teceo 40 LED 500mA	64 Watts	8.00 Metres	Steel	
Y	17	STREET LIGHTING	CONVAMORE ROAD	GRIMSBY					70251						
Y	18	STREET LIGHTING	CONVAMORE ROAD	GRIMSBY	527848.47	409231.46	1946		46595	1 Urbis LED	Teceo 40 LED 500mA	64 Watts	8.00 Metres	Steel	
Y	19	STREET LIGHTING	CONVAMORE ROAD	GRIMSBY	527835.22	409186.72	1946		46596	1 Urbis LED	Teceo 40 LED 500mA	64 Watts	8.00 Metres	Steel	
Y	20	STREET LIGHTING	CONVAMORE ROAD	GRIMSBY	527835.95	409153.12	1946		46597	1 Urbis LED	Teceo 40 LED 500mA	64 Watts	8.00 Metres	Steel	
Y	21	STREET LIGHTING	CONVAMORE ROAD	GRIMSBY	527842.58	409116.03	1946		46598	1 Urbis LED	Teceo 40 LED 500mA	64 Watts	8.00 Metres	Steel	
Y	22	STREET LIGHTING	CONVAMORE ROAD	GRIMSBY	527860.07	409082.98	1946		46599	1 Urbis LED	Teceo 40 LED 500mA	64 Watts	8.00 Metres	Steel	
Y	23	STREET LIGHTING	CONVAMORE ROAD	GRIMSBY	527862.1	409045.79	1946		46600	1 Urbis LED	Teceo 40 LED 500mA	64 Watts	8.00 Metres	Steel	
Y	24	STREET LIGHTING	CONVAMORE ROAD	GRIMSBY	527879.46	409012.14	1946		46601	1 Urbis LED	Teceo 40 LED 500mA	64 Watts	8.00 Metres	Steel	
Y	25	STREET LIGHTING	CONVAMORE ROAD	GRIMSBY	527881.85	408975.23	1946		46602	1 Urbis LED	Teceo 40 LED 500mA	64 Watts	8.00 Metres	Steel	
Y	26	STREET LIGHTING	CONVAMORE ROAD	GRIMSBY	527899.53	408940.8	2012		46603	1 Urbis LED	Teceo 40 LED 500mA	64 Watts	8.00 Metres	Steel	
Y	27	STREET LIGHTING	CONVAMORE ROAD	GRIMSBY	527901.55	408903.33	1946		46604	1 Urbis LED	Teceo 40 LED 500mA	64 Watts	8.00 Metres	Steel	
Y	28	STREET LIGHTING	CONVAMORE ROAD	GRIMSBY	527918.49	408871.57	1946		46605	1 Urbis LED	Teceo 40 LED 500mA	64 Watts	8.00 Metres	Steel	
Y	29	STREET LIGHTING	CONVAMORE ROAD	GRIMSBY	527921.26	408833.27	1946		46606	1 Urbis LED	Teceo 40 LED 500mA	64 Watts	8.00 Metres	Steel	
Y	30	STREET LIGHTING	CONVAMORE ROAD	GRIMSBY	527938.93	408799.67	1946		46607	1 Urbis LED	Teceo 40 LED 500mA	64 Watts	8.00 Metres	Steel	
Y	31	STREET LIGHTING	CONVAMORE ROAD	GRIMSBY	527941.51	408760.54	1946		46608	1 Urbis LED	Teceo 40 LED 500mA	64 Watts	8.00 Metres	Steel	
Y	32	STREET LIGHTING	CONVAMORE ROAD	GRIMSBY	527957.9	408736.7	2024	30/08/2024	46609	Urbis	Teceo 48 LED 500mA	79 Watts	8.00 Metres	Galvanised Steel	
Y	33	STREET LIGHTING	CONVAMORE ROAD	GRIMSBY	527957.16	408704.57	1946		46610	1 Urbis LED	Teceo 40 LED 500mA	64 Watts	8.00 Metres	Steel	
Y	34	STREET LIGHTING	CONVAMORE ROAD	GRIMSBY	527965.13	408671.43	2017	30/09/2017	46611	1 Urbis LED	Teceo 24 LED 500mA	40 Watts	6.00 Metres	Galvanised Steel	
Y	35	STREET LIGHTING	CONVAMORE ROAD	GRIMSBY	527981.83	408644.92	1986		46612	1 Urbis LED	Teceo 24 LED 500mA	40 Watts	5.00 Metres	Galvanised Steel	
Y	36	STREET LIGHTING	CONVAMORE ROAD	GRIMSBY	527995.05	408603.87	2006		46613	1 Urbis LED	Teceo 24 LED 500mA	40 Watts	6.00 Metres	Stainless Steel	
Y	37	STREET LIGHTING	CONVAMORE ROAD	GRIMSBY	528006.14	408560.87	1986		46614	1 Urbis LED	Teceo 24 LED 500mA	40 Watts	5.00 Metres	Galvanised Steel	
Y	1	STREET LIGHTING	ELEANOR STREET	GRIMSBY	527617.37	409566.03	1994		47891	1 Urbis LED	Teceo 48 LED 700mA	104 Watts	12.00 Metres	Galvanised Steel	
Y	2	STREET LIGHTING	ELEANOR STREET	GRIMSBY	527652.53	409549	2014		47892	1 Urbis LED	Teceo 48 LED 500mA	79 Watts	8.00 Metres	Galvanised Steel	
Y	3	STREET LIGHTING	ELEANOR STREET	GRIMSBY	527697.27	409552.22	2017		47893	1 Urbis LED	Teceo 48 LED 500mA	79 Watts	8.00 Metres	Galvanised Steel	
Y	4	STREET LIGHTING	ELEANOR STREET	GRIMSBY	527731.7	409537.4	2017		47894	1 Urbis LED	Teceo 48 LED 500mA	79 Watts	8.00 Metres	Galvanised Steel	
Y	5	STREET LIGHTING	ELEANOR STREET	GRIMSBY	527775.15	409541.18	1999		47895	1 Urbis LED	Teceo 48 LED 500mA	79 Watts	8.00 Metres	Steel	
Y	6	STREET LIGHTING	ELEANOR STREET	GRIMSBY	527795.59	409528.29	2017		47896	1 Urbis LED	Teceo 48 LED 500mA	79 Watts	8.00 Metres	Galvanised Steel	
Y	7	STREET LIGHTING	ELEANOR STREET	GRIMSBY	527835.36	409533.91	1999		47897	1 Urbis LED	Teceo 48 LED 500mA	79 Watts	8.00 Metres	Steel	
Y	8	STREET LIGHTING	ELEANOR STREET	GRIMSBY	527871.26	409517.8	1999		47898	1 Urbis LED	Teceo 48 LED 500mA	79 Watts	8.00 Metres	Steel	
Y	9	STREET LIGHTING	ELEANOR STREET	GRIMSBY	527892.99	409524.33	1999		47899	1 Urbis LED	Teceo 48 LED 500mA	79 Watts	8.00 Metres	Steel	
Y	10	STREET LIGHTING	ELEANOR STREET	GRIMSBY	527903.3	409507.76	1999		47900	1 Urbis LED	Teceo 48 LED 500mA	79 Watts	10.00 Metres	Galvanised Steel	
Y	11	STREET LIGHTING	ELEANOR STREET	GRIMSBY	527958.95	409496.65	1999		47901	1 Urbis LED	Teceo 48 LED 500mA	79 Watts	10.00 Metres	Galvanised Steel	
Y	12	STREET LIGHTING	ELEANOR STREET	GRIMSBY	527998.31	409495.95	1999		47902	1 Urbis LED	Teceo 48 LED 500mA	79 Watts	10.00 Metres	Galvanised Steel	
Y	13	STREET LIGHTING	ELEANOR STREET	GRIMSBY	528016.41	409476.52	1999		47903	1 Urbis LED	Teceo 48 LED 500mA	79 Watts	10.00 Metres	Galvanised Steel	
Y	14	STREET LIGHTING	ELEANOR STREET	GRIMSBY	528044.18	409479.24	2003		47904	1 Urbis LED	Teceo 48 LED 500mA	79 Watts	10.00 Metres	Stainless Steel	
Y	15	STREET LIGHTING	ELEANOR STREET	GRIMSBY	528067.14	409459.11	1999		47905	1 Urbis LED	Teceo 48 LED 500mA	79 Watts	10.00 Metres	Galvanised Steel	
Y	16	STREET LIGHTING	ELEANOR STREET	GRIMSBY	528105.37	409459.43	1999		47906	1 Urbis LED	Teceo 48 LED 500mA	79 Watts	10.00 Metres	Galvanised Steel	
Y	17	STREET LIGHTING	ELEANOR STREET	GRIMSBY	528121.32	409442.41	1999		47907	1 Urbis LED	Teceo 48 LED 500mA	79 Watts	10.00 Metres	Galvanised Steel	
Y	18	STREET LIGHTING	ELEANOR STREET	GRIMSBY	528150.43	409431.96	1999		47908	1 Urbis LED	Teceo 48 LED 500mA	79 Watts	10.00 Metres	Galvanised Steel	
Y	19	STREET LIGHTING	ELEANOR STREET	GRIMSBY	528183.34	409421.65	1999		47909	1 Urbis LED	Teceo 48 LED 500mA	79 Watts	10.00 Metres	Galvanised Steel	
Y	20	STREET LIGHTING	ELEANOR STREET	GRIMSBY	528207.64	409426.52	1999		47910	1 Urbis LED	Teceo 48 LED 500mA	79 Watts	10.00 Metres	Galvanised Steel	
Y	1	STREET LIGHTING	PASTURE STREET	GRIMSBY	527924.09	409276.56	1989		54738	1 Urbis LED	Teceo 48 LED 500mA	79 Watts	10.00 Metres	Galvanised Steel	
Y	2	STREET LIGHTING	PASTURE STREET	GRIMSBY	527902.54	409295.06	1989		54739	1 Urbis LED	Teceo 48 LED 500mA	79 Watts	10.00 Metres	Galvanised Steel	
Y	3	STREET LIGHTING	PASTURE STREET	GRIMSBY	527890.39	409320.75	1989		54740	1 Urbis LED	Teceo 48 LED 500mA	79 Watts	10.00 Metres	Galvanised Steel	
Y	4	STREET LIGHTING	PASTURE STREET	GRIMSBY	527861.12	409313.29	1989		54741	1 Urbis LED	Teceo 48 LED 500mA	79 Watts	10.00 Metres	Galvanised Steel	
Y	5	STREET LIGHTING	PASTURE STREET	GRIMSBY	527837.18	409326.27	1989		54742	1 Urbis LED	Teceo 48 LED 500mA	79 Watts	10.00 Metres	Galvanised Steel	
Y	6	STREET LIGHTING	PASTURE STREET	GRIMSBY	527804.22	409331.34	1989		54743	1 Urbis LED	Teceo 48 LED 500mA	79 Watts	10.00 Metres	Galvanised Steel	
Y	7	STREET LIGHTING	PASTURE STREET	GRIMSBY	527770.16	409328.12	1989		54744	1 Urbis LED	Teceo 48 LED 500mA	79 Watts	10.00 Metres	Galvanised Steel	
Y	8	STREET LIGHTING	PASTURE STREET	GRIMSBY	527732.05	409343.03	1989		54745	1 Urbis LED	Teceo 48 LED 500mA	79 Watts	10.00 Metres	Galvanised Steel	
Y	9	STREET LIGHTING	PASTURE STREET	GRIMSBY	527693.57	409339.44	1989		54746	1 Urbis LED	Teceo 48 LED 500mA	79 Watts	10.00 Metres	Galvanised Steel	
Y	10	STREET LIGHTING	PASTURE STREET	GRIMSBY	527659.32	409354.63	1989		54747	1 Urbis LED	Teceo 48 LED 500mA	79 Watts	10.00 Metres	Galvanised Steel	
Y	11	STREET LIGHTING	PASTURE STREET	GRIMSBY	527628.39	409349.66	1989		54748	1 Urbis LED	Teceo 48 LED 500mA	79 Watts	10.00 Metres	Galvanised Steel	
Y	12	STREET LIGHTING	PASTURE STREET	GRIMSBY	527588.99	409356.01	1989		54749	1 Urbis LED	Teceo 48 LED 500mA	79 Watts	10.00 Metres	Galvanised Steel	
Y	13	STREET LIGHTING	PASTURE STREET	GRIMSBY	527554.17	409370.67	1989		54750	1 Urbis LED	Teceo 48 LED 500mA	79 Watts	10.00 Metres	Galvanised Steel	
Y	14	STREET LIGHTING	PASTURE STREET	GRIMSBY	527514.21	409376.66	1989		54751	1 Urbis LED	Teceo 48 LED 500mA	79 Watts	10.00 Metres	Galvanised Steel	
Y	15	STREET LIGHTING	PASTURE STREET	GRIMSBY	527490.28	409372.05	1989		54752	1 Urbis LED	Teceo 48 LED 500mA	79 Watts	10.00 Metres	Galvanised Steel	
Y	16	STREET LIGHTING	PASTURE STREET	GRIMSBY	527451.43	409378.59	1989		54753	1 Urbis LED	Teceo 48 LED 500mA	79 Watts	10.00 Metres	Galvanised Steel	
Y	17	STREET LIGHTING	PASTURE STREET	GRIMSBY	527407.06	409385.31	1989		54754	1 Urbis LED	Teceo 48 LED 500mA	79 Watts	10.00 Metres	Galvanised Steel	
Y	18	STREET LIGHTING	PASTURE STREET	GRIMSBY	527366.92	409391.84	1989		54755	1 Urbis LED	Teceo 48 LED 500mA	79 Watts	10.00 Metres	Galvanised Steel	
Y	19	STREET LIGHTING	PASTURE STREET	GRIMSBY	527332.68	409395.71	1989		54756	1 Urbis LED	Teceo 48 LED 500mA	79 Watts	10.00 Metres	Galvanised Steel	
Y	20	STREET LIGHTING	PASTURE STREET	GRIMSBY	527307.88	409419.1	1998		54757	1 Urbis LED	Teceo 48 LED 500mA	79 Watts	10.00 Metres	Galvanised Steel	
Y	21	STREET LIGHTING	PASTURE STREET	GRIMSBY	527289.46	409409.35	1998		54758	1 Urbis LED	Teceo 48 LED 500mA	79 Watts	10.00 Metres	Galvanised Steel	
Y	22	STREET LIGHTING	PASTURE STREET	GRIMSBY	527240.88	409413.66	1998		54759	1 Urbis LED	Teceo 48 LED 500mA	79 Watts	10.00 Metres	Galvanised Steel	
Y	23	STREET LIGHTING	PASTURE STREET	GRIMSBY	527210.63	409429.8	1998		54760	1 Urbis LED	Teceo 48 LED 700mA	104 Watts	10.00 Metres	Galvanised Steel	
Y	24	STREET LIGHTING	PASTURE STREET	GRIMSBY	527176.48	409419.91	1998		54761	1 Urbis LED	Teceo 48 LED 700mA	104 Watts	10.00 Metres	Galvanised Steel	
Y	25	STREET LIGHTING	PASTURE STREET	GRIMSBY	527151.25	409439.14	1998		54762	1 Urbis LED	Teceo 48 LED 700mA	104 Watts	10.00 Metres	Galvanised Steel	
Y	1	STREET LIGHTING	HAINTON AVENUE	GRIMSBY	527601.91	409539.76	1988		50022	1 Urbis LED	Teceo 48 LED 700mA	104 Watts	12.00 Metres	Galvanised Steel	
Y	2	STREET LIGHTING	HAINTON AVENUE	GRIMSBY	527578.35	409513.7	1988		50023	1 Urbis LED	Teceo 48 LED 700mA	104 Watts	10.00 Metres	Galvanised Steel	
Y	3	STREET LIGHTING	HAINTON AVENUE	GRIMSBY	527577.55	409484.35	2019	17/01/2019	67261	Urbis	Teceo 48 LED 700mA	104 Watts	12.00 Metres	Galvanised Steel	
Y	4	STREET LIGHTING	HAINTON AVENUE	GRIMSBY	527574.3	409460.86	1988		50025	1 Urbis LED	Teceo 48 LED 700mA	104 Watts	10.00 Metres	Galvanised Steel	
Y	5	STREET LIGHTING	HAINTON AVENUE	GRIMSBY	527569.97	409430.44	1988		50026	1 Urbis LED	Teceo 48 LED 700mA	104 Watts	10.00 Metres	Galvanised Steel	
Y	6	STREET LIGHTING	HAINTON AVENUE	GRIMSBY	527585.99	409402.83	1988		50027	1 Urbis LED	Teceo 48 LED 700mA	104 Watts	10.00 Metres	Galvanised Steel	
Y	7	STREET LIGHTING	HAINTON AVENUE	GRIMSBY	527565.36	409378.98	1988		50028	1 Urbis LED	Teceo 48 LED 700mA	104 Watts	10.00 Metres	Galvanised Steel	
Y	8	STREET LIGHTING	HAINTON AVENUE	GRIMSBY	527572.91	409347.77	1988		50029	1 Urbis LED	Teceo 48 LED 500mA	79 Watts	10.00 Metres	Galvanised Steel	
Y	9	STREET LIGHTING	HAINTON AVENUE	GRIMSBY	527568.5	409312.05	1988		50030	1 Urbis LED	Teceo 48 LED 500mA	79 Watts	10.00 Metres	Galvanised Steel	
Y	10	STREET LIGHTING	HAINTON AVENUE	GRIMSBY	527553.21	409278.45	1988		50031	1 Urbis LED	Teceo 48 LED 500mA	79 Watts	10.00 Metres	Galvanised Steel	
Y	11	STREET LIGHTING	HAINTON AVENUE	GRIMSBY	527548.8	409243.19	1988		50032	1 Urbis LED	Teceo 48 LED 500mA	79 Watts	10.00 Metres	Galvanised Steel	
Y	12	STREET LIGHTING	HAINTON AVENUE	GRIMSBY	527555.24	409210.79	1988		50033	1 Urbis LED	Teceo 48 LED 500mA	79 Watts	10.00 Metres	Galvanised Steel	
Y	13	STREET LIGHTING	HAINTON AVENUE	GRIMSBY	527539.22	409172.95	1988		50034	1 Urbis LED	Teceo 48 LED 500mA	79 Watts	10.00 Metres	Galvanised Steel	
Y	14	STREET LIGHTING	HAINTON AVENUE	GRIMSBY	527545.67	409138.61	1988		50035	1 Urbis LED	Teceo 48 LED 500mA	79 Watts	10.00 Metres	Galvanised Steel	
Y	15	STREET LIGHTING	HAINTON AVENUE	GRIMSBY	527530.39	409103.08	1988		50036	1 Urbis LED	Teceo 48 LED 500mA	79 Watts	10.00 Metres	Galvanised Steel	
Y	16	STREET LIGHTING	HAINTON AVENUE	GRIMSBY	527525.05	409064.32	1988		50037	1 Urbis LED	Teceo 48 LED 500mA	79 Watts	10.00 Metres	Galvanised Steel	
Y	17	STREET LIGHTING	HAINTON AVENUE	GRIMSBY	527531.68	409027.4	1988		50038	1 Urbis LED	Teceo 48 LED 500mA	79 Watts	10.00 Metres	Galvanised Steel	
Y	18	STREET LIGHTING	HAINTON AVENUE	GRIMSBY	527516.75	408999.84	1988		50039	1 Urbis LED	Teceo 48 LED 500mA	79 Watts	10.00 Metres	Galvanised Steel	
Y	19	STREET LIGHTING	HAINTON AVENUE	GRIMSBY	527523.02	408963.11	1988		50040	1 Urbis LED	Teceo 48 LED 500mA	79 Watts	10.00 Metres	Galvanised Steel	
Y	20	STREET LIGHTING	HAINTON AVENUE	GRIMSBY	527507.37	408926.47	1988		50041	1 Urbis LED	Teceo 48 LED 500mA	79 Watts	10.00 Metres	Galvanised Steel	
Y	21	STREET LIGHTING	HAINTON AVENUE	GRIMSBY	527502.95	408892.87	1988		50042	1 Urbis LED	Teceo 48 LED 500mA	79 Watts	10.00 Metres	Galvanised Steel	
Y	22	STREET LIGHTING	HAINTON AVENUE	GRIMSBY	527509.02	408855.95	1988		50043	1 Urbis LED	Teceo 48 LED 500mA	79 Watts	10.00 Metres	Galvanised Steel	
Y	23	STREET LIGHTING	HAINTON AVENUE	GRIMSBY	527493.93	408823	1988		50044	1 Urbis LED	Teceo 48 LED 700mA	104 Watts	10.00 Metres	Galvanised Steel	
Y	24	STREET LIGHTING	HAINTON AVENUE	GRIMSBY	527500.19	408786.26	2007		50045	1 Urbis LED	Teceo 48 LED 500mA	79 Watts	10.00 Metres	Steel	
Y	25	STREET LIGHTING	HAINTON AVENUE	GRIMSBY	527486.75	408771.26	1988		50046	1 Urbis LED	Teceo 48 LED 500mA	79 Watts	10.00 Metres	Galvanised Steel	
Y	26	STREET LIGHTING	HAINTON AVENUE	GRIMSBY	527486.19	408734.71	1988		50047	1 Urbis LED	Teceo 48 LED 500mA	79 Watts	10.00 Metres	Galvanised Steel	
Y	27	STREET LIGHTING	HAINTON AVENUE	GRIMSBY	527504.97	408704.05	1988		50048	1 Urbis LED	Teceo 48 LED 500mA	79 Watts	10.00 Metres	Galvanised Steel	
Y	28	STREET LIGHTING	HAINTON AVENUE	GRIMSBY	527501.29	408676.53	1988		50049	1 Urbis LED	Teceo 48 LED 500mA	79 Watts	10.00 Metres	Galvanised Steel	
Y	29	STREET LIGHTING	HAINTON AVENUE	GRIMSBY	527519.15	408655.26	1988		50050	1 Urbis LED	Teceo 48 LED 500mA	79 Watts	10.00 Metres	Galvanised Steel	
Y	30	STREET LIGHTING	HAINTON AVENUE	GRIMSBY	527515.28	408626.82	1988		50051	1 Urbis LED	Teceo 48 LED 500mA	79 Watts	10.00 Metres	Galvanised Steel	

Y	31	STREET LIGHTING	HAINTON AVENUE	GRIMSBY	527535.35	408595.42	1988		50052	1 Urbis LED	Teceo 48 LED 500mA	79 Watts	10.00 Metres	Galvanised Steel	
Y	32	STREET LIGHTING	HAINTON AVENUE	GRIMSBY	527531.49	408568.63	1988		50053	1 Urbis LED	Teceo 48 LED 500mA	79 Watts	10.00 Metres	Galvanised Steel	
Y	33	STREET LIGHTING	HAINTON AVENUE	GRIMSBY	527545.85	408558.78	1988		50054	1 Urbis LED	Teceo 48 LED 500mA	79 Watts	10.00 Metres	Galvanised Steel	
Y	34	STREET LIGHTING	HAINTON AVENUE	GRIMSBY	527555.79	408522.79	1988		50055	1 Urbis LED	Teceo 48 LED 500mA	79 Watts	10.00 Metres	Galvanised Steel	
Y	35	STREET LIGHTING	HAINTON AVENUE	GRIMSBY	527554.69	408486.33	2013		50056	1 Urbis LED	Teceo 48 LED 500mA	79 Watts	10.00 Metres	Galvanised Steel	
Y	36	STREET LIGHTING	HAINTON AVENUE	GRIMSBY	527571.99	408464.79	1988		50057	1 Urbis LED	Teceo 48 LED 500mA	79 Watts	10.00 Metres	Galvanised Steel	
Y	37	STREET LIGHTING	HAINTON AVENUE	GRIMSBY	527571.63	408425.02	1988		50058	1 Urbis LED	Teceo 48 LED 500mA	79 Watts	10.00 Metres	Galvanised Steel	
Y	38	STREET LIGHTING	HAINTON AVENUE	GRIMSBY	527580.65	408393.63	1988		50059	1 Urbis LED	Teceo 48 LED 500mA	79 Watts	10.00 Metres	Galvanised Steel	
Y	39	STREET LIGHTING	HAINTON AVENUE	GRIMSBY	527600.72	408361.87	1988		50060	1 Urbis LED	Teceo 48 LED 500mA	79 Watts	10.00 Metres	Galvanised Steel	
Y	40	STREET LIGHTING	HAINTON AVENUE	GRIMSBY	527599.61	408324.77	1988		50061	1 Urbis LED	Teceo 48 LED 500mA	79 Watts	10.00 Metres	Galvanised Steel	
Y	41	STREET LIGHTING	HAINTON AVENUE	GRIMSBY	527618.21	408300	1988		50062	1 Urbis LED	Teceo 48 LED 500mA	79 Watts	10.00 Metres	Galvanised Steel	
Y	42	STREET LIGHTING	HAINTON AVENUE	GRIMSBY	527615.26	408268.43	1988		50063	1 Urbis LED	Teceo 48 LED 500mA	79 Watts	10.00 Metres	Galvanised Steel	
Y	43	STREET LIGHTING	HAINTON AVENUE	GRIMSBY	527626.49	408228.84	1988		50064	1 Urbis LED	Teceo 48 LED 500mA	79 Watts	10.00 Metres	Galvanised Steel	
Y	44	STREET LIGHTING	HAINTON AVENUE	GRIMSBY	527643.25	408208.22	1988		50065	1 Urbis LED	Teceo 48 LED 500mA	79 Watts	10.00 Metres	Galvanised Steel	
Y	45	STREET LIGHTING	HAINTON AVENUE	GRIMSBY	527641.78	408173.42	1988		50066	1 Urbis LED	Teceo 48 LED 500mA	79 Watts	10.00 Metres	Galvanised Steel	
Y	46	STREET LIGHTING	HAINTON AVENUE	GRIMSBY	527661.48	408143.5	1988		50067	1 Urbis LED	Teceo 48 LED 500mA	79 Watts	10.00 Metres	Galvanised Steel	
Y	47	STREET LIGHTING	HAINTON AVENUE	GRIMSBY	527666.82	408123.71	1988		50068	1 Urbis LED	Teceo 48 LED 500mA	79 Watts	10.00 Metres	Galvanised Steel	
Y	48	STREET LIGHTING	HAINTON AVENUE	GRIMSBY	527660.91	408094.98	2019	28/08/2019	67262	Urbis	Teceo 48 LED 700mA	104 Watts	12.00 Metres	Galvanised Steel	
Y	1	STREET LIGHTING	HUMBERSTONE ROAD	GRIMSBY	528204.75	409402.65	1989		51157	1 Urbis LED	Teceo 48 LED 500mA	79 Watts	10.00 Metres	Galvanised Steel	
Y	2	STREET LIGHTING	HUMBERSTONE ROAD	GRIMSBY	528224.24	409401.76	1989		51158	1 Urbis LED	Teceo 48 LED 500mA	79 Watts	10.00 Metres	Galvanised Steel	
Y	3	STREET LIGHTING	HUMBERSTONE ROAD	GRIMSBY	528214.09	409384.71	1989		51159	1 Urbis LED	Teceo 48 LED 500mA	79 Watts	10.00 Metres	Galvanised Steel	
Y	4	STREET LIGHTING	HUMBERSTONE ROAD	GRIMSBY	528226.62	409359.39	1989		51160	1 Urbis LED	Teceo 48 LED 500mA	79 Watts	10.00 Metres	Galvanised Steel	
Y	5	STREET LIGHTING	HUMBERSTONE ROAD	GRIMSBY	528255.48	409334.14	1989		51161	1 Urbis LED	Teceo 48 LED 500mA	79 Watts	10.00 Metres	Galvanised Steel	
Y	6	STREET LIGHTING	HUMBERSTONE ROAD	GRIMSBY	528268	409307	2002		51162	1 Urbis LED	Teceo 48 LED 500mA	79 Watts	10.00 Metres	Stainless Steel	
Y	7	STREET LIGHTING	HUMBERSTONE ROAD	GRIMSBY	528283.96	409278	1989		51163	1 Urbis LED	Teceo 48 LED 500mA	79 Watts	10.00 Metres	Galvanised Steel	
Y	8	STREET LIGHTING	HUMBERSTONE ROAD	GRIMSBY	528281.8	409249.58	1989		51164	1 Urbis LED	Teceo 48 LED 500mA	79 Watts	10.00 Metres	Galvanised Steel	
Y	9	STREET LIGHTING	HUMBERSTONE ROAD	GRIMSBY	528310.03	409226.61	1989		51165	1 Urbis LED	Teceo 40 LED 500mA	64 Watts	8.00 Metres	Galvanised Steel	
Y	10	STREET LIGHTING	HUMBERSTONE ROAD	GRIMSBY				19/06/2025	70220	Urbis	Teceo 40 LED 500mA	64 Watts	8.00 Metres	Galvanised Steel	
Y	11	STREET LIGHTING	HUMBERSTONE ROAD	GRIMSBY	528316.99	409179.52	1989		51167	1 Urbis LED	Teceo 40 LED 500mA	64 Watts	8.00 Metres	Galvanised Steel	
Y	12	STREET LIGHTING	HUMBERSTONE ROAD	GRIMSBY	528341.8	409163.63	1989		51168	1 Urbis LED	Teceo 40 LED 500mA	64 Watts	8.00 Metres	Galvanised Steel	
Y	13	STREET LIGHTING	HUMBERSTONE ROAD	GRIMSBY	528338.13	409137.49	1989		51169	1 Urbis LED	Teceo 40 LED 500mA	64 Watts	8.00 Metres	Galvanised Steel	
Y	14	STREET LIGHTING	HUMBERSTONE ROAD	GRIMSBY	528348.13	409117.69	1989		51170	1 Urbis LED	Teceo 40 LED 500mA	64 Watts	8.00 Metres	Galvanised Steel	
Y	15	STREET LIGHTING	HUMBERSTONE ROAD	GRIMSBY	528373.19	409101.93	1989		51171	1 Urbis LED	Teceo 40 LED 500mA	64 Watts	8.00 Metres	Galvanised Steel	
Y	16	STREET LIGHTING	HUMBERSTONE ROAD	GRIMSBY	528381.04	409080.22	2004		51172	1 Urbis LED	Teceo 40 LED 500mA	64 Watts	8.00 Metres	Stainless Steel	
Y	17	STREET LIGHTING	HUMBERSTONE ROAD	GRIMSBY				30/05/2025	70221	Urbis	Teceo 40 LED 500mA	64 Watts	8.00 Metres	Galvanised Steel	
Y	18	STREET LIGHTING	HUMBERSTONE ROAD	GRIMSBY	528401.92	409043.76	1989		51174	1 Urbis LED	Teceo 40 LED 500mA	64 Watts	8.00 Metres	Galvanised Steel	
Y	19	STREET LIGHTING	HUMBERSTONE ROAD	GRIMSBY	528401.54	409011.29	1989		51175	1 Urbis LED	Teceo 40 LED 500mA	64 Watts	8.00 Metres	Galvanised Steel	
Y	20	STREET LIGHTING	HUMBERSTONE ROAD	GRIMSBY	528425.09	408997.94	1989		51176	1 Urbis LED	Teceo 40 LED 500mA	64 Watts	8.00 Metres	Galvanised Steel	
Y	21	STREET LIGHTING	HUMBERSTONE ROAD	GRIMSBY	528422.3	408970.41	1989		51177	1 Urbis LED	Teceo 40 LED 500mA	64 Watts	8.00 Metres	Galvanised Steel	
Y	23	STREET LIGHTING	HUMBERSTONE ROAD	GRIMSBY	528452.26	408914.8	1989		51178	1 Urbis LED	Teceo 24 LED 500mA	40 Watts	6.00 Metres	Galvanised Steel	
Y	24	STREET LIGHTING	HUMBERSTONE ROAD	GRIMSBY	528476.72	408923.77	1997		51179	Urbis	Axia 8 LED 350mA	10 Watts	5.00 Metres	Galvanised Steel	
Y	25	STREET LIGHTING	HUMBERSTONE ROAD	GRIMSBY	528483.68	408900.42	1997		51180	Urbis	Axia 8 LED 350mA	10 Watts	5.00 Metres	Galvanised Steel	
Y	26	STREET LIGHTING	HUMBERSTONE ROAD	GRIMSBY	528461.88	408891.19	1997		51181	1 Urbis LED	Teceo 24 LED 500mA	40 Watts	8.00 Metres	Galvanised Steel	
Y	27	STREET LIGHTING	HUMBERSTONE ROAD	GRIMSBY	528474.91	408865.59	1997		51182	1 Urbis LED	Teceo 24 LED 500mA	40 Watts	8.00 Metres	Galvanised Steel	
Y	28	STREET LIGHTING	HUMBERSTONE ROAD	GRIMSBY	528487.61	408840.29	1997		51183	1 Urbis LED	Teceo 24 LED 500mA	40 Watts	8.00 Metres	Galvanised Steel	
Y	1	STREET LIGHTING	KINGSGATE	GRIMSBY	527985.35	409405.56	2004		51844	1 Urbis LED	Axia 16 LED 500mA	28 Watts	6.00 Metres	Stainless Steel	
Y	2	STREET LIGHTING	KINGSGATE	GRIMSBY	528007.18	409386.39	2004		51845	1 Urbis LED	Axia 16 LED 500mA	28 Watts	6.00 Metres	Stainless Steel	
Y	3	STREET LIGHTING	KINGSGATE	GRIMSBY	528032.77	409377.21	2004		51846	1 Urbis LED	Axia 16 LED 500mA	28 Watts	6.00 Metres	Stainless Steel	
Y	4	STREET LIGHTING	KINGSGATE	GRIMSBY	528054.4	409371.28	2004		51847	1 Urbis LED	Axia 16 LED 500mA	28 Watts	6.00 Metres	Stainless Steel	
Y	1	STREET LIGHTING	ACKLAM GROVE	GRIMSBY				27/06/2025	70229	Urbis	Axia 16 LED 350mA	19 Watts	6.00 Metres	Galvanised Steel	
Y	2	STREET LIGHTING	ACKLAM GROVE	GRIMSBY	528511.9	408879.16	2000		42723	Urbis	Axia 16 LED 350mA	19 Watts	6.00 Metres	Steel	
Y	3	STREET LIGHTING	ACKLAM GROVE	GRIMSBY	528492.15	408879.29	2000		42724	Urbis	Axia 16 LED 350mA	19 Watts	6.00 Metres	Steel	
Y	4	STREET LIGHTING	ACKLAM GROVE	GRIMSBY	528503.54	408856.31	2000		42725	Urbis	Axia 16 LED 350mA	19 Watts	6.00 Metres	Steel	
Y	1	STREET LIGHTING	ARISTON STREET	GRIMSBY	528746.97	409179.04	1990		43327	1 Urbis LED	Axia 16 LED 500mA	28 Watts	6.00 Metres	Galvanised Steel	
Y	2	STREET LIGHTING	ARISTON STREET	GRIMSBY	528757.35	409156.31	1990		43328	1 Urbis LED	Axia 16 LED 500mA	28 Watts	6.00 Metres	Galvanised Steel	
Y	3	STREET LIGHTING	ARISTON STREET	GRIMSBY	528774.06	409121.89	1990		43329	1 Urbis LED	Axia 16 LED 500mA	28 Watts	6.00 Metres	Galvanised Steel	
Y	1	STREET LIGHTING	FOOTPATH BETWEEN ARISTON	GRIMSBY	528802.67	409116.19	2000		48691	Urbis	Axia 16 LED 350mA	19 Watts	6.00 Metres	Galvanised Steel	
Y	1	STREET LIGHTING	CARR LANE	GRIMSBY	528687.12	409420.19	1989		45337	1 Urbis LED	Teceo 48 LED 500mA	79 Watts	10.00 Metres	Galvanised Steel	
Y	2	STREET LIGHTING	CARR LANE	GRIMSBY					70250						
Y	3	STREET LIGHTING	CARR LANE	GRIMSBY	528723.06	409369.05	1946		45339	Urbis	AXIA 3.3 48 LED 540mA	78 Watts	8.00 Metres	Steel	
Y	4	STREET LIGHTING	CARR LANE	GRIMSBY	528730.79	409333.86	1946		45340	1 Urbis LED	Teceo 48 LED 500mA	79 Watts	8.00 Metres	Steel	
Y	5	STREET LIGHTING	CARR LANE	GRIMSBY	528754.58	409305.32	1946		45341	1 Urbis LED	Teceo 48 LED 500mA	79 Watts	8.00 Metres	Steel	
Y	6	STREET LIGHTING	CARR LANE	GRIMSBY	528761.67	409271.39	1946		45342	1 Urbis LED	Teceo 48 LED 500mA	79 Watts	8.00 Metres	Steel	
Y	7	STREET LIGHTING	CARR LANE	GRIMSBY	528785.08	409246.56	2009		45343	1 Urbis LED	Teceo 48 LED 500mA	79 Watts	8.00 Metres	Steel	
Y	8	STREET LIGHTING	CARR LANE	GRIMSBY	528793.45	409206.33	1946		45344	1 Urbis LED	Teceo 48 LED 500mA	79 Watts	8.00 Metres	Steel	
Y	9	STREET LIGHTING	CARR LANE	GRIMSBY	528816.23	409179.31	1946		45345	1 Urbis LED	Teceo 48 LED 500mA	79 Watts	8.00 Metres	Steel	
Y	10	STREET LIGHTING	CARR LANE	GRIMSBY	528824.84	409142.73	1946		45346	1 Urbis LED	Teceo 48 LED 500mA	79 Watts	8.00 Metres	Steel	
Y	11	STREET LIGHTING	CARR LANE	GRIMSBY	528848.51	409114.25	1946		45347	1 Urbis LED	Teceo 48 LED 500mA	79 Watts	8.00 Metres	Steel	
Y	12	STREET LIGHTING	CARR LANE	GRIMSBY	528856.32	409075.46	2008		45348	1 Urbis LED	Teceo 48 LED 500mA	79 Watts	8.00 Metres	Steel	
Y	13	STREET LIGHTING	CARR LANE	GRIMSBY	528881.06	409050.21	2008		45349	1 Urbis LED	Teceo 48 LED 500mA	79 Watts	8.00 Metres	Steel	
Y	14	STREET LIGHTING	CARR LANE	GRIMSBY	528887.37	409014.26	1946		45350	1 Urbis LED	Teceo 48 LED 500mA	79 Watts	8.00 Metres	Steel	
Y	15	STREET LIGHTING	CARR LANE	GRIMSBY	528904.7	408978.55	1946		45351	1 Urbis LED	Teceo 48 LED 500mA	79 Watts	8.00 Metres	Steel	
Y	16	STREET LIGHTING	CARR LANE	GRIMSBY	528927.73	408951.65	1946		45352	1 Urbis LED	Teceo 48 LED 500mA	79 Watts	8.00 Metres	Steel	
Y	17	STREET LIGHTING	CARR LANE	GRIMSBY	528935.83	408914.94	1946		45353	1 Urbis LED	Teceo 48 LED 500mA	79 Watts	8.00 Metres	Steel	
Y	18	STREET LIGHTING	CARR LANE	GRIMSBY	528959.63	408887.03	1946		45354	1 Urbis LED	Teceo 48 LED 500mA	79 Watts	8.00 Metres	Steel	
Y	19	STREET LIGHTING	CARR LANE	GRIMSBY	528969.25	408847.47	1946		45355	1 Urbis LED	Teceo 48 LED 500mA	79 Watts	8.00 Metres	Steel	
Y	20	STREET LIGHTING	CARR LANE	GRIMSBY	528982.79	408819.75	1946		45356	1 Urbis LED	Teceo 48 LED 500mA	79 Watts	8.00 Metres	Steel	
Y	21	STREET LIGHTING	CARR LANE	GRIMSBY	529010.26	408783.74	1946		45357	1 Urbis LED	Teceo 48 LED 500mA	79 Watts	8.00 Metres	Steel	
Y	22	STREET LIGHTING	CARR LANE	GRIMSBY	529020.99	408741.64	1946		45358	1 Urbis LED	Teceo 48 LED 500mA	79 Watts	8.00 Metres	Steel	
Y	23	STREET LIGHTING	CARR LANE	GRIMSBY	529043.27	408699.74	1946		45359	1 Urbis LED	Teceo 48 LED 500mA	79 Watts	8.00 Metres	Steel	
Y	24	STREET LIGHTING	CARR LANE	GRIMSBY	529064.74	408663.32	1946		45360	1 Urbis LED	Teceo 48 LED 500mA	79 Watts	8.00 Metres	Steel	
Y	25	STREET LIGHTING	CARR LANE	GRIMSBY	529084.25	408627.62	1946		45361	1 Urbis LED	Teceo 48 LED 700mA	104 Watts	8.00 Metres	Steel	
Y	26	STREET LIGHTING	CARR LANE	GRIMSBY	529084.89	408573.19	1946		45362	1 Urbis LED	Teceo 48 LED 700mA	104 Watts	8.00 Metres	Steel	
Y	27	STREET LIGHTING	CARR LANE	GRIMSBY	529097.21	408538.71	1946		45363	1 Urbis LED	Teceo 48 LED 500mA	79 Watts	8.00 Metres	Steel	
Y	28	STREET LIGHTING	CARR LANE	GRIMSBY	529113.29	408503.9	1946		45364	1 Urbis LED	Teceo 48 LED 500mA	79 Watts	8.00 Metres	Steel	
Y	29	STREET LIGHTING	CARR LANE	GRIMSBY	529133.46	408474.65	1946		45365	1 Urbis LED	Teceo 48 LED 500mA	79 Watts	8.00 Metres	Steel	
Y	1	STREET LIGHTING	CARTLEDGE AVENUE	GRIMSBY	528553.17	408953.09	1998		45396	Urbis	Axia 16 LED 350mA	19 Watts	5.00 Metres	Steel	
Y	2	STREET LIGHTING	CARTLEDGE AVENUE	GRIMSBY	528558.87	408927.08	1998		45397	Urbis	Axia 16 LED 350mA	19 Watts	5.00 Metres	Steel	
Y	3	STREET LIGHTING	CARTLEDGE AVENUE	GRIMSBY	528554.06	408898.6	1998		45398	Urbis	Axia 16 LED 350mA	19 Watts	5.00 Metres	Steel	
Y	4	STREET LIGHTING	CARTLEDGE AVENUE	GRIMSBY	528569.5	408874.23	1998		45399	Urbis	Axia 16 LED 350mA	19 Watts	5.00 Metres	Steel	
Y	5	STREET LIGHTING	CARTLEDGE AVENUE	GRIMSBY	528568.36	408847.02	1998		45400	Urbis	Axia 16 LED 350mA	19 Watts	5.00 Metres	Steel	
Y	6	STREET LIGHTING	CARTLEDGE AVENUE	GRIMSBY	528576.97	408821.51	1998		45401	Urbis	Axia 16 LED 350mA	19 Watts	5.00 Metres	Steel	
Y	7	STREET LIGHTING	CARTLEDGE AVENUE	GRIMSBY	528596.84	408797.52	1998		45402	Urbis	Axia 16 LED 350mA	19 Watts	5.00 Metres	Steel	
Y	8	STREET LIGHTING	CARTLEDGE AVENUE	GRIMSBY	528600.26	408768.66	1998		45403	Urbis	Axia 16 LED 350mA	19 Watts	5.00 Metres	Steel	
Y	9	STREET LIGHTING	CARTLEDGE AVENUE	GRIMSBY	528621.9	408743.92	1998		45404	Urbis	Axia 16 LED 350mA	19 Watts	5.00 Metres	Steel	
Y	10	STREET LIGHTING	CARTLEDGE AVENUE	GRIMSBY	528627.22	408710.06	1998		45405	Urbis	Axia 16 LED 350mA	19 Watts	5.00 Metres	Steel	
Y	1	STREET LIGHTING	CARTMEL GROVE	GRIMSBY	528752	408775	2001		45406	Urbis	Axia 16 LED 350mA	19 Watts	5.00 Metres	Galvanised Steel	
Y	2	STREET LIGHTING	CARTMEL GROVE	GRIMSBY	528778	408788	2001		45407	Urbis	Axia 16 LED 350mA	19 Watts	5.00 Metres	Galvanised Steel	
Y	1	STREET LIGHTING	CHURCH CLOSE	GRIMSBY	528917.6	408428.79	2019	29/07/2019	45967	Urbis	Axia 16 LED 350mA	19 Watts	6.00 Metres	Galvanised Steel	
Y	2	STREET LIGHTING	CHURCH CLOSE	GRIMSBY	528939.46	408415.02	1986		45968	Urbis	Axia 16 LED 350mA	19 Watts	5.00 Metres	Galvanised Steel	
Y	3	STREET LIGHTING	CHURCH CLOSE	GRIMSBY	528927.98	408403.37	1986		45969	Urbis	Axia 16 LED 350mA	19 Watts	5.00 Metres	Galvanised Steel	
Y	1	STREET LIGHTING	CHURCH LANE	OLD CLEE	529045.47	408397.01	1995		46050	Urbis		27 Watts	6.00 Metres	Steel	
Y	2	STREET LIGHTING	CHURCH LANE	OLD CLEE	529021.67	408405.05	1995		46051	Urbis		27 Watts	6.00 Metres	Steel	
Y	3	STREET LIGHTING	CHURCH LANE	OLD CLEE	528994.84	408412.08	1995		46052	Urbis		27 Watts	6.00 Metres	Steel	
Y	4	STREET LIGHTING	CHURCH LANE	OLD CLEE	528967.6	408429.76	1995		46053	Urbis		27 Watts	6.00 Metres	Steel	
Y	5	STREET LIGHTING	CHURCH LANE	OLD CLEE	528960.11	408461.5	1995		46054	Urbis		27 Watts	6.00 Metres	Steel	
Y	6	STREET LIGHTING	CHURCH LANE	OLD CLEE	528941.34	408457.24	2002		46055	Urbis	Axia 16 LED 350mA	19 Watts	6.00 Metres	Stainless Steel	
Y	7	STREET LIGHTING	CHURCH LANE	OLD CLEE	528910.91	408442.94	2019	23/07/2019	46056	Urbis	Axia 16 LED 350mA	19 Watts	6.00 Metres	Galvanised Steel	
Y	8	STREET LIGHTING	CHURCH LANE	OLD CLEE	528883.62	408431.7	2011		46057	Urbis	Axia 16 LED 350mA	19 Watts	6.00 Metres	Steel	
Y	1	STREET LIGHTING	CLEE CRESCENT	GRIMSBY	529314.75	408406.13	2009		46161	1 Urbis LED	Teceo 48 LED 500mA	79 Watts	8.00 Metres	Steel	

Y	2	STREET LIGHTING	CLEE CRESCENT	GRIMSBY					70248						
Y	3	STREET LIGHTING	CLEE CRESCENT	GRIMSBY	529285.68	408462.75	2007		46163	1 Urbis LED	Teceo 48 LED 500mA	79 Watts	8.00 Metres	Steel	
Y	4	STREET LIGHTING	CLEE CRESCENT	GRIMSBY	529253.45	408470.81	1953		46164	1 Urbis LED	Teceo 48 LED 500mA	79 Watts	8.00 Metres	Steel	
Y	5	STREET LIGHTING	CLEE CRESCENT	GRIMSBY	529218.52	408479.67	1953		46165	1 Urbis LED	Teceo 48 LED 500mA	79 Watts	8.00 Metres	Steel	
Y	6	STREET LIGHTING	CLEE CRESCENT	GRIMSBY	529180.42	408479.17	1953		46166	1 Urbis LED	Teceo 48 LED 500mA	79 Watts	8.00 Metres	Steel	
Y	7	STREET LIGHTING	CLEE CRESCENT	GRIMSBY	529152.7	408460.5	1953		46167	1 Urbis LED	Teceo 48 LED 500mA	79 Watts	8.00 Metres	Steel	
Y	8	STREET LIGHTING	CLEE CRESCENT	GRIMSBY	529121.89	408431.51	1953		46168	1 Urbis LED	Teceo 48 LED 500mA	79 Watts	8.00 Metres	Steel	
Y	9	STREET LIGHTING	CLEE CRESCENT	GRIMSBY	529084.3	408417.4	1953		46169	1 Urbis LED	Teceo 48 LED 500mA	79 Watts	8.00 Metres	Steel	
Y	10	STREET LIGHTING	CLEE CRESCENT	GRIMSBY	529106.3	408384.52	1953		46170	1 Urbis LED	Teceo 48 LED 500mA	79 Watts	8.00 Metres	Steel	
Y	11	STREET LIGHTING	CLEE CRESCENT	GRIMSBY	529129.75	408359.39	1953		46171	1 Urbis LED	Teceo 48 LED 500mA	79 Watts	8.00 Metres	Steel	
Y	12	STREET LIGHTING	CLEE CRESCENT	GRIMSBY	529163.16	408338.31	1953		46172	1 Urbis LED	Teceo 48 LED 500mA	79 Watts	8.00 Metres	Steel	
Y	13	STREET LIGHTING	CLEE CRESCENT	GRIMSBY	529178.86	408306.79	2006		46173	1 Urbis LED	Teceo 48 LED 500mA	79 Watts	8.00 Metres	Stainless Steel	
Y	1	STREET LIGHTING	COLIN AVENUE	GRIMSBY	528572.75	408898.47	1998		46359	1 Urbis LED	Axia 16 LED 500mA	28 Watts	6.00 Metres	Galvanised Steel	
Y	2	STREET LIGHTING	COLIN AVENUE	GRIMSBY	528608.32	408899.73	1998		46360	1 Urbis LED	Axia 16 LED 500mA	28 Watts	6.00 Metres	Galvanised Steel	
Y	3	STREET LIGHTING	COLIN AVENUE	GRIMSBY	528632.37	408916.5	1998		46361	1 Urbis LED	Axia 16 LED 500mA	28 Watts	6.00 Metres	Galvanised Steel	
Y	4	STREET LIGHTING	COLIN AVENUE	GRIMSBY	528658.19	408919.98	1998		46362	1 Urbis LED	Axia 16 LED 500mA	28 Watts	6.00 Metres	Galvanised Steel	
Y	5	STREET LIGHTING	COLIN AVENUE	GRIMSBY	528678.32	408904.48	1998		46363	1 Urbis LED	Axia 16 LED 500mA	28 Watts	6.00 Metres	Galvanised Steel	
Y	6	STREET LIGHTING	COLIN AVENUE	GRIMSBY	528692.5	408875.74	1998		46364	1 Urbis LED	Axia 16 LED 500mA	28 Watts	6.00 Metres	Galvanised Steel	
Y	7	STREET LIGHTING	COLIN AVENUE	GRIMSBY	528696.42	408844.16	1998		46365	1 Urbis LED	Axia 16 LED 500mA	28 Watts	6.00 Metres	Galvanised Steel	
Y	8	STREET LIGHTING	COLIN AVENUE	GRIMSBY	528717.43	408825.49	1998		46366	1 Urbis LED	Axia 16 LED 500mA	28 Watts	6.00 Metres	Galvanised Steel	
Y	9	STREET LIGHTING	COLIN AVENUE	GRIMSBY	528730.22	408799.48	1998		46367	1 Urbis LED	Axia 16 LED 500mA	28 Watts	6.00 Metres	Galvanised Steel	
Y	10	STREET LIGHTING	COLIN AVENUE	GRIMSBY	528733.51	408766.44	1998		46368	1 Urbis LED	Axia 16 LED 500mA	28 Watts	6.00 Metres	Galvanised Steel	
Y	11	STREET LIGHTING	COLIN AVENUE	GRIMSBY	528757.05	408738.72	1998		46369	1 Urbis LED	Axia 16 LED 500mA	28 Watts	6.00 Metres	Galvanised Steel	
Y	12	STREET LIGHTING	COLIN AVENUE	GRIMSBY	528761.98	408704.86	1998		46370	1 Urbis LED	Axia 16 LED 500mA	28 Watts	6.00 Metres	Galvanised Steel	
Y	13	STREET LIGHTING	COLIN AVENUE	GRIMSBY	528784.77	408677.64	1998		46371	1 Urbis LED	Axia 16 LED 500mA	28 Watts	6.00 Metres	Galvanised Steel	
Y	14	STREET LIGHTING	COLIN AVENUE	GRIMSBY	528789.96	408639.1	1998		46372	1 Urbis LED	Axia 16 LED 500mA	28 Watts	6.00 Metres	Galvanised Steel	
Y	1	STREET LIGHTING	CYNTHIA ROAD	GRIMSBY	529214	408503	2002		47211	1 Urbis LED	Teceo 24 LED 500mA	40 Watts	6.00 Metres	Galvanised Steel	
Y	2	STREET LIGHTING	CYNTHIA ROAD	GRIMSBY	529227	408555	2001		47212	1 Urbis LED	Teceo 24 LED 500mA	40 Watts	6.00 Metres	Galvanised Steel	
Y	1	STREET LIGHTING	DRAKE AVENUE	GRIMSBY	528910.04	408570.52	2009		47548	1 Urbis LED	Axia 16 LED 500mA	28 Watts	6.00 Metres	Steel	
Y	2	STREET LIGHTING	DRAKE AVENUE	GRIMSBY	528935.11	408536.98	2015	30/07/2015	47549	1 Urbis LED	Axia 16 LED 500mA	28 Watts	6.00 Metres	Galvanised Steel	
Y	3	STREET LIGHTING	DRAKE AVENUE	GRIMSBY	528941.94	408495.84	2011		47550	1 Urbis LED	Axia 16 LED 500mA	28 Watts	6.00 Metres	Galvanised Steel	
Y	1	STREET LIGHTING	ESCART AVENUE	GRIMSBY	528739	408727	2000		48053	Urbis	Axia 16 LED 350mA	19 Watts	5.00 Metres	Galvanised Steel	
Y	2	STREET LIGHTING	ESCART AVENUE	GRIMSBY	528719	408730	2000		48054	Urbis	Axia 16 LED 350mA	19 Watts	5.00 Metres	Galvanised Steel	
Y	3	STREET LIGHTING	ESCART AVENUE	GRIMSBY	528697	408712	1996		48055	Urbis	Axia 16 LED 350mA	19 Watts	5.00 Metres	Galvanised Steel	
Y	4	STREET LIGHTING	ESCART AVENUE	GRIMSBY	528668.48	408703.79	2001		48056	Urbis	Axia 16 LED 350mA	19 Watts	5.00 Metres	Galvanised Steel	
Y	5	STREET LIGHTING	ESCART AVENUE	GRIMSBY	528646	408695	2000		48057	Urbis	Axia 16 LED 350mA	19 Watts	5.00 Metres	Galvanised Steel	
Y	6	STREET LIGHTING	ESCART AVENUE	GRIMSBY	528620	408696	2000		48058	Urbis	Axia 16 LED 350mA	19 Watts	5.00 Metres	Galvanised Steel	
Y	1	STREET LIGHTING	EVELYN GROVE NORTH	GRIMSBY	528863.29	408755.02	1991		48232	Urbis	Axia 16 LED 350mA	19 Watts	5.00 Metres	Galvanised Steel	
Y	2	STREET LIGHTING	EVELYN GROVE NORTH	GRIMSBY	528853.39	408774.69	1991		48233	Urbis	Axia 16 LED 350mA	19 Watts	5.00 Metres	Galvanised Steel	
Y	1	STREET LIGHTING	EVELYN GROVE SOUTH	GRIMSBY	528882.4	408728.88	1991		48234	Urbis	Axia 16 LED 350mA	19 Watts	5.00 Metres	Galvanised Steel	
Y	2	STREET LIGHTING	EVELYN GROVE SOUTH	GRIMSBY	528894.15	408706.26	1991		48235	Urbis	Axia 16 LED 350mA	19 Watts	5.00 Metres	Galvanised Steel	
Y	1	STREET LIGHTING	FROBISHER AVENUE	GRIMSBY	529067.26	408616.54	1997		49040	1 Urbis LED	Teceo 16 LED 500mA	28 Watts	6.00 Metres	Galvanised Steel	
Y	2	STREET LIGHTING	FROBISHER AVENUE	GRIMSBY	529028.52	408615.84	1997		49041	1 Urbis LED	Teceo 16 LED 500mA	28 Watts	6.00 Metres	Galvanised Steel	
Y	3	STREET LIGHTING	FROBISHER AVENUE	GRIMSBY	528991.06	408603.37	1997		49042	1 Urbis LED	Teceo 16 LED 500mA	28 Watts	6.00 Metres	Galvanised Steel	
Y	4	STREET LIGHTING	FROBISHER AVENUE	GRIMSBY	528958.53	408581.28	1997		49043	1 Urbis LED	Teceo 16 LED 500mA	28 Watts	6.00 Metres	Galvanised Steel	
Y	5	STREET LIGHTING	FROBISHER AVENUE	GRIMSBY	528924.73	408581.73	1997		49044	1 Urbis LED	Teceo 16 LED 500mA	28 Watts	6.00 Metres	Galvanised Steel	
Y	1	STREET LIGHTING	GROVE CRESCENT	GRIMSBY	529029.5	408957.16	1993		49941	Urbis	Axia 16 LED 350mA	19 Watts	6.00 Metres	Galvanised Steel	
Y	2	STREET LIGHTING	GROVE CRESCENT	GRIMSBY	529045.2	408938.36	1993		49942	Urbis	Axia 16 LED 350mA	19 Watts	6.00 Metres	Galvanised Steel	
Y	3	STREET LIGHTING	GROVE CRESCENT	GRIMSBY	529071.48	408943.04	2019	14/10/2019	67631	Urbis	Axia 16 LED 350mA	19 Watts	6.00 Metres	Galvanised Steel	
Y	4	STREET LIGHTING	GROVE CRESCENT	GRIMSBY	529081.78	408963.87	1993		49944	Urbis	Axia 16 LED 350mA	19 Watts	6.00 Metres	Galvanised Steel	
Y	5	STREET LIGHTING	GROVE CRESCENT	GRIMSBY	529094.69	408983.61	1993		49945	Urbis	Axia 16 LED 350mA	19 Watts	6.00 Metres	Galvanised Steel	
Y	1	STREET LIGHTING	HAMONT ROAD	GRIMSBY	528899.25	409027.15	1993		50117	Urbis	Axia 16 LED 350mA	19 Watts	6.00 Metres	Galvanised Steel	
Y	2	STREET LIGHTING	HAMONT ROAD	GRIMSBY	528925.71	409030.76	1993		50118	Urbis	Axia 16 LED 350mA	19 Watts	6.00 Metres	Galvanised Steel	
Y	3	STREET LIGHTING	HAMONT ROAD	GRIMSBY	528949.25	409043.86	1993		50119	Urbis	Axia 16 LED 350mA	19 Watts	6.00 Metres	Galvanised Steel	
Y	4	STREET LIGHTING	HAMONT ROAD	GRIMSBY	528969	409063.67	1993		50120	Urbis	Axia 16 LED 350mA	19 Watts	6.00 Metres	Galvanised Steel	
Y	5	STREET LIGHTING	HAMONT ROAD	GRIMSBY	528999.12	409069.3	1993		50121	Urbis	Axia 16 LED 350mA	19 Watts	6.00 Metres	Galvanised Steel	
Y	6	STREET LIGHTING	HAMONT ROAD	GRIMSBY	529024.18	409082.59	1993		50122	Urbis	Axia 16 LED 350mA	19 Watts	6.00 Metres	Galvanised Steel	
Y	1	STREET LIGHTING	HAWKINS GROVE	GRIMSBY	529004.08	408620.77	2005		50353	Urbis	Axia 16 LED 350mA	19 Watts	6.00 Metres	Stainless Steel	
Y	2	STREET LIGHTING	HAWKINS GROVE	GRIMSBY	528998.49	408638.18	2005		50354	Urbis	Axia 16 LED 350mA	19 Watts	6.00 Metres	Stainless Steel	
Y	3	STREET LIGHTING	HAWKINS GROVE	GRIMSBY	528989.3	408671.38	2004		50355	Urbis	Axia 16 LED 350mA	19 Watts	6.00 Metres	Stainless Steel	
Y	4	STREET LIGHTING	HAWKINS GROVE	GRIMSBY	528960.93	408658.07	2005		50356	Urbis	Axia 16 LED 350mA	19 Watts	6.00 Metres	Stainless Steel	
Y	5	STREET LIGHTING	HAWKINS GROVE	GRIMSBY	528934.22	408660.78	2005		50357	Urbis	Axia 16 LED 350mA	19 Watts	6.00 Metres	Stainless Steel	
Y	1	STREET LIGHTING	HELENE GROVE	GRIMSBY	528979.25	409052.1	1993		50479	Urbis	Axia 16 LED 350mA	19 Watts	6.00 Metres	Galvanised Steel	
Y	2	STREET LIGHTING	HELENE GROVE	GRIMSBY	528984.19	409027.79	1993		50480	Urbis	Axia 16 LED 350mA	19 Watts	6.00 Metres	Galvanised Steel	
Y	3	STREET LIGHTING	HELENE GROVE	GRIMSBY	528998.49	409000.14	1993		50481	Urbis	Axia 16 LED 350mA	19 Watts	6.00 Metres	Galvanised Steel	
Y	4	STREET LIGHTING	HELENE GROVE	GRIMSBY	529009.25	408978.24	1993		50482	Urbis	Axia 16 LED 350mA	19 Watts	6.00 Metres	Galvanised Steel	
Y	1	STREET LIGHTING	HERON CLOSE	GRIMSBY	528493.32	407941.05	2016	30/06/2016	50556	1 Urbis LED	Axia 16 LED 500mA	28 Watts	6.00 Metres	Galvanised Steel	
Y	2	STREET LIGHTING	HERON CLOSE	GRIMSBY	528532.35	407961.3	2002		50557	1 Urbis LED	Axia 16 LED 500mA	28 Watts	6.00 Metres	Stainless Steel	
Y	3	STREET LIGHTING	HERON CLOSE	GRIMSBY	528573.04	407973.73	2002		50558	1 Urbis LED	Axia 16 LED 500mA	28 Watts	6.00 Metres	Stainless Steel	
Y	4	STREET LIGHTING	HERON CLOSE	GRIMSBY	528612.81	407998.12	1997		50559	1 Urbis LED	Axia 16 LED 500mA	28 Watts	5.00 Metres	Galvanised Steel	
Y	5	STREET LIGHTING	HERON CLOSE	GRIMSBY	528656.45	408011.29	2016	30/06/2016	50560	1 Urbis LED	Axia 16 LED 500mA	28 Watts	6.00 Metres	Galvanised Steel	
Y	6	STREET LIGHTING	HERON CLOSE	GRIMSBY	528687.2	408030.71	2016	30/06/2016	50561	1 Urbis LED	Axia 16 LED 500mA	28 Watts	6.00 Metres	Galvanised Steel	
Y	7	STREET LIGHTING	HERON CLOSE	GRIMSBY	528719.23	408034.39	2010	06/07/2010	50562	1 Urbis LED	Axia 16 LED 500mA	28 Watts	6.00 Metres	Galvanised Steel	
Y	8	STREET LIGHTING	HERON CLOSE	GRIMSBY	528751.08	408048.48	2016	30/06/2016	50563	1 Urbis LED	Axia 16 LED 500mA	28 Watts	6.00 Metres	Galvanised Steel	
Y	9	STREET LIGHTING	HERON CLOSE	GRIMSBY	528798.4	408051.52	2016	30/06/2016	50564	1 Urbis LED	Axia 16 LED 500mA	28 Watts	6.00 Metres	Galvanised Steel	
Y	1	STREET LIGHTING	HOLYOAKE ROAD	GRIMSBY	529035.07	408758.99	1998		50968	1 Urbis LED	Teceo 16 LED 500mA	28 Watts	6.00 Metres	Galvanised Steel	
Y	2	STREET LIGHTING	HOLYOAKE ROAD	GRIMSBY	529061.66	408762.73	1998		50969	1 Urbis LED	Teceo 16 LED 500mA	28 Watts	6.00 Metres	Galvanised Steel	
Y	3	STREET LIGHTING	HOLYOAKE ROAD	GRIMSBY	529085.33	408776.84	1998		50970	1 Urbis LED	Teceo 16 LED 500mA	28 Watts	6.00 Metres	Galvanised Steel	
Y	4	STREET LIGHTING	HOLYOAKE ROAD	GRIMSBY	529109	408790.58	1998		50971	1 Urbis LED	Teceo 16 LED 500mA	28 Watts	6.00 Metres	Galvanised Steel	
Y	5	STREET LIGHTING	HOLYOAKE ROAD	GRIMSBY	529134.69	408805.96	1998		50972	1 Urbis LED	Teceo 16 LED 500mA	28 Watts	6.00 Metres	Galvanised Steel	
Y	6	STREET LIGHTING	HOLYOAKE ROAD	GRIMSBY	529153.55	408817.28	1998		50973	1 Urbis LED	Teceo 16 LED 500mA	28 Watts	6.00 Metres	Galvanised Steel	
Y	7	STREET LIGHTING	HOLYOAKE ROAD	GRIMSBY	529173.05	408841.02	1998		50974	1 Urbis LED	Teceo 16 LED 500mA	28 Watts	6.00 Metres	Galvanised Steel	
Y	8	STREET LIGHTING	HOLYOAKE ROAD	GRIMSBY	529193.81	408853.61	1998		50975	1 Urbis LED	Teceo 16 LED 500mA	28 Watts	6.00 Metres	Galvanised Steel	
Y	1	STREET LIGHTING	HAVELOCK MEWS	GRIMSBY	529112.4	408810.61	2002		50305	Urbis	Axia 16 LED 350mA	19 Watts	5.00 Metres	Stainless Steel	
Y	2	STREET LIGHTING	HAVELOCK MEWS	GRIMSBY	529105.79	408825.78	2002		50306	Urbis	Axia 16 LED 350mA	19 Watts	5.00 Metres	Stainless Steel	
Y	3	STREET LIGHTING	HAVELOCK MEWS	GRIMSBY	529090.55	408836.08	2002		50307	Urbis	Axia 16 LED 350mA	19 Watts	5.00 Metres	Stainless Steel	
Y	1	STREET LIGHTING	HOWARD GROVE	GRIMSBY	528898.04	408607.11	2021	13/08/2021	51017	Urbis	Teceo 24 LED 500mA	40 Watts	6.00 Metres	Galvanised Steel	
Y	2	STREET LIGHTING	HOWARD GROVE	GRIMSBY	528872.33	408643.71	2018	04/05/2018	51018	1 Urbis LED	Teceo 24 LED 500mA	40 Watts	6.00 Metres	Galvanised Steel	
Y	1	STREET LIGHTING	HUDDLESTON ROAD	GRIMSBY	528736.08	409138.59	1985		51027	1 Urbis LED	Teceo 16 LED 500mA	28 Watts	6.00 Metres	Galvanised Steel	
Y	2	STREET LIGHTING	HUDDLESTON ROAD	GRIMSBY	528701.91	409131.31	1985		51028	1 Urbis LED	Teceo 16 LED 500mA	28 Watts	6.00 Metres	Galvanised Steel	
Y	3	STREET LIGHTING	HUDDLESTON ROAD	GRIMSBY	528676.84	409108.72	2016		51029	1 Urbis LED	Teceo 16 LED 500mA	28 Watts	6.00 Metres	Galvanised Steel	
Y	4	STREET LIGHTING	HUDDLESTON ROAD	GRIMSBY	528641.78	409101.06	1985		51030	1 Urbis LED	Teceo 16 LED 500mA	28 Watts	6.00 Metres	Galvanised Steel	
Y	5	STREET LIGHTING	HUDDLESTON ROAD	GRIMSBY	528598.62	409070.74	1985		51031	1 Urbis LED	Teceo 16 LED 500mA	28 Watts	6.00 Metres	Galvanised Steel	
Y	6	STREET LIGHTING	HUDDLESTON ROAD	GRIMSBY	528561.02	409062.96	1985		51032	1 Urbis LED	Teceo 16 LED 500mA	28 Watts	6.00 Metres	Galvanised Steel	
Y	7	STREET LIGHTING	HUDDLESTON ROAD	GRIMSBY	528532.92	409040.49	1985		51033	1 Urbis LED	Teceo 16 LED 500mA	28 Watts	6.00 Metres	Galvanised Steel	
Y	8	STREET LIGHTING	HUDDLESTON ROAD	GRIMSBY	528495.58	409033.08	1985		51034	1 Urbis LED	Teceo 16 LED 500mA	28 Watts	6.00 Metres	Galvanised Steel	
Y	9	STREET LIGHTING	HUDDLESTON ROAD	GRIMSBY	528471.15	409011.37	1985		51035	1 Urbis LED	Teceo 16 LED 500mA	28 Watts	6.00 Metres	Galvanised Steel	
Y	1	STREET LIGHTING	HUNSLEY CRESCENT	GRIMSBY	528781.94	407876.79	2016	31/03/2016	51216	Urbis	Axia 16 LED 350mA	19 Watts	6.00 Metres	Galvanised Steel	
Y	2	STREET LIGHTING	HUNSLEY CRESCENT	GRIMSBY	528795.93	407851.29	2016	31/03/2016	51217	Urbis	Axia 16 LED 350mA	19 Watts	6.00 Metres	Galvanised Steel	
Y	3	STREET LIGHTING	HUNSLEY CRESCENT	GRIMSBY	528810.48	407824.5	2016	31/03/2016	51218	Urbis	Axia 16 LED 350mA	19 Watts	6.00 Metres	Galvanised Steel	
Y	4	STREET LIGHTING	HUNSLEY CRESCENT	GRIMSBY	528774.21	407805.26	2016	31/03/2016	51219	Urbis	Axia 16 LED 350mA	19 Watts	6.00 Metres	Galvanised Steel	
Y	5	STREET LIGHTING	HUNSLEY CRESCENT	GRIMSBY	528747.7	407781.79	2016	31/03/2016	51220	Urbis	Axia 16 LED 350mA	19 Watts	6.00 Metres	Galvanised Steel	
Y	6	STREET LIGHTING	HUNSLEY CRESCENT	GRIMSBY	528711.98	407766.14	2016	31/03/2016	51221	Urbis	Axia 16 LED 350mA	19 Watts	6.00 Metres	Galvanised Steel	
Y	7	STREET LIGHTING	HUNSLEY CRESCENT	GRIMSBY	528685.65	407742.48	2016	31/03/2016	51222	Urbis	Axia 16 LED 350mA	19 Watts	6.00 Metres	Galvanised Steel	
Y	8	STREET LIGHTING	HUNSLEY CRESCENT	GRIMSBY	528651.96	407729.13	2016	31/03/2016	51223	Urbis	Axia 16 LED 350mA	19 Watts	6.00 Metres	Galvanised Steel	
Y	9	STREET LIGHTING	HUNSLEY CRESCENT	GRIMSBY	528631.15	407762.91	2016	31/03/2016	51224	Urbis	Axia 16 LED 350mA	19 Watts	6.00 Metres	Galvanised Steel	
Y	10	STREET LIGHTING	HUNSLEY CRESCENT	GRIMSBY	528607.5	407789.51	2015	30/07/2015	51225	Urbis	Axia 16 LED 350mA	19 Watts	6.00 Metres	Galvanised Steel	
Y	1	STREET LIGHTING	KATHLEEN GROVE	GRIMSBY	529037.86	409093.67	1993		51473	1 Urbis LED	Teceo 24 LED 500mA	40 Watts	6.00 Metres	Galvanised Steel	
Y	2	STREET LIGHTING	KATHLEEN GROVE	GRIMSBY	529052.16	409067.15	1993		51474	1 Urbis LED	Teceo 24 LED 500mA	40 Watts	6.00 Metres	Galvanised Steel	
Y	3	STREET LIGHTING	KATHLEEN GROVE	GRIMSBY	529060.89	409034.94	1993		51475	1 Urbis LED	Teceo 24 LED 500mA	40 Watts	6.00 Metres	Galvanised Steel	

Y	4	STREET LIGHTING	KATHLEEN GROVE	GRIMSBY	529081.27	409012.53	1993		51476	1 Urbis LED	Teceo 24 LED 500mA	40 Watts	6.00 Metres	Galvanised Steel	
Y	1	STREET LIGHTING	KNIGHT STREET	GRIMSBY	528769.82	408664.73	1998		51920	Urbis	Axia 16 LED 350mA	19 Watts	6.00 Metres	Galvanised Steel	
Y	2	STREET LIGHTING	KNIGHT STREET	GRIMSBY	528734.89	408661.88	1998		51921	Urbis	Axia 16 LED 350mA	19 Watts	6.00 Metres	Galvanised Steel	
Y	3	STREET LIGHTING	KNIGHT STREET	GRIMSBY	528706.66	408651.94	1998		51922	Urbis	Axia 16 LED 350mA	19 Watts	6.00 Metres	Galvanised Steel	
Y	4	STREET LIGHTING	KNIGHT STREET	GRIMSBY				30/05/2025	70215	Urbis	Axia 16 LED 350mA	19 Watts	6.00 Metres	Galvanised Steel	
Y	5	STREET LIGHTING	KNIGHT STREET	GRIMSBY	528652.74	408633.27	1998		51924	Urbis	Axia 16 LED 350mA	19 Watts	6.00 Metres	Galvanised Steel	
Y	1	STREET LIGHTING	LICHFIELD ROAD	GRIMSBY	528997.7	408776.1	2009		52505	1 Urbis LED	Axia 16 LED 500mA	28 Watts	6.00 Metres	Steel	
Y	2	STREET LIGHTING	LICHFIELD ROAD	GRIMSBY	528967.9	408778.3	2009		52506	1 Urbis LED	Axia 16 LED 500mA	28 Watts	6.00 Metres	Steel	
Y	3	STREET LIGHTING	LICHFIELD ROAD	GRIMSBY	528938.2	408770.6	2009		52507	1 Urbis LED	Axia 16 LED 500mA	28 Watts	6.00 Metres	Steel	
Y	4	STREET LIGHTING	LICHFIELD ROAD	GRIMSBY	528901.9	408745.5	2009		52508	1 Urbis LED	Axia 16 LED 500mA	28 Watts	6.00 Metres	Steel	
Y	5	STREET LIGHTING	LICHFIELD ROAD	GRIMSBY	528865.6	408745.8	2009		52509	1 Urbis LED	Axia 16 LED 500mA	28 Watts	6.00 Metres	Steel	
Y	6	STREET LIGHTING	LICHFIELD ROAD	GRIMSBY	528837.1	408724.5	2009		52510	Urbis	Axia 16 LED 350mA	19 Watts	6.00 Metres	Steel	
Y	7	STREET LIGHTING	LICHFIELD ROAD	GRIMSBY	528802.73	408724.68	2009		52511	Urbis	Axia 16 LED 350mA	19 Watts	6.00 Metres	Steel	
Y	8	STREET LIGHTING	LICHFIELD ROAD	GRIMSBY	528776.2	408716.1	2009		52512	1 Urbis LED	Axia 16 LED 500mA	28 Watts	6.00 Metres	Steel	
Y	1	STREET LIGHTING	MILLER AVENUE	GRIMSBY	528993.05	408837.85	1995		53669	Urbis	Axia 16 LED 350mA	19 Watts	6.00 Metres	Galvanised Steel	
Y	2	STREET LIGHTING	MILLER AVENUE	GRIMSBY	529017.99	408850.45	1995		53670	Urbis	Axia 16 LED 350mA	19 Watts	6.00 Metres	Galvanised Steel	
Y	3	STREET LIGHTING	MILLER AVENUE	GRIMSBY	529041.91	408862.41	1995		53671	Urbis	Axia 16 LED 350mA	19 Watts	6.00 Metres	Galvanised Steel	
Y	4	STREET LIGHTING	MILLER AVENUE	GRIMSBY	529064.57	408874.12	1995		53672	Urbis	Axia 16 LED 350mA	19 Watts	6.00 Metres	Galvanised Steel	
Y	5	STREET LIGHTING	MILLER AVENUE	GRIMSBY	529088.87	408886.46	1995		53673	Urbis	Axia 16 LED 350mA	19 Watts	6.00 Metres	Galvanised Steel	
Y	6	STREET LIGHTING	MILLER AVENUE	GRIMSBY	529115.2	408887.41	1995		53674	Urbis	Axia 16 LED 350mA	19 Watts	6.00 Metres	Galvanised Steel	
Y	7	STREET LIGHTING	MILLER AVENUE	GRIMSBY	529131.4	408908.11	1995		53675	Urbis	Axia 16 LED 350mA	19 Watts	6.00 Metres	Galvanised Steel	
Y	8	STREET LIGHTING	MILLER AVENUE	GRIMSBY	529159.88	408910.45	1995		53676	1 Urbis LED	Axia 16 LED 500mA	28 Watts	6.00 Metres	Galvanised Steel	
Y	1	STREET LIGHTING	PHELPS PLACE	GRIMSBY	529154.98	408444.62	2015	30/07/2015	55379	Urbis	Axia 16 LED 350mA	19 Watts	6.00 Metres	Galvanised Steel	
Y	2	STREET LIGHTING	PHELPS PLACE	GRIMSBY	529173.33	408416.2	2015	30/07/2015	55380	Urbis	Axia 16 LED 350mA	19 Watts	6.00 Metres	Galvanised Steel	
Y	3	STREET LIGHTING	PHELPS PLACE	GRIMSBY	529193	408414	2003		55381	Urbis	Axia 16 LED 350mA	19 Watts	6.00 Metres	Stainless Steel	
Y	1	STREET LIGHTING	ROSINA GROVE SOUTH	GRIMSBY	528947.58	408749.18	1993		56317	Urbis	Axia 16 LED 350mA	19 Watts	5.00 Metres	Galvanised Steel	
Y	2	STREET LIGHTING	ROSINA GROVE SOUTH	GRIMSBY	528952.32	408725.82	1993		56318	Urbis	Axia 16 LED 350mA	19 Watts	5.00 Metres	Galvanised Steel	
Y	1	STREET LIGHTING	RUNSWICK ROAD	GRIMSBY	528856.52	409046.02	2008		56382	1 Urbis LED	Teceo 40 LED 500mA	64 Watts	8.00 Metres	Steel	
Y	2	STREET LIGHTING	RUNSWICK ROAD	GRIMSBY	528838.32	409042.37	1995		56383	1 Urbis LED	Teceo 40 LED 500mA	64 Watts	8.00 Metres	Galvanised Steel	
Y	3	STREET LIGHTING	RUNSWICK ROAD	GRIMSBY	528801.64	409045.55	2003		56384	1 Urbis LED	Teceo 40 LED 500mA	64 Watts	8.00 Metres	Stainless Steel	
Y	4	STREET LIGHTING	RUNSWICK ROAD	GRIMSBY	528795.55	409061.7	2003		56385	Urbis	Axia 8 LED 350mA	10 Watts	5.00 Metres	Galvanised Steel	
Y	5	STREET LIGHTING	RUNSWICK ROAD	GRIMSBY	528806.8	409003.67	2003		56386	Urbis	Axia 8 LED 350mA	10 Watts	5.00 Metres	Galvanised Steel	
Y	6	STREET LIGHTING	RUNSWICK ROAD	GRIMSBY	528779.18	409078.76	2003		56387	Urbis	Axia 8 LED 350mA	10 Watts	5.00 Metres	Stainless Steel	
Y	7	STREET LIGHTING	RUNSWICK ROAD	GRIMSBY	528797.12	409020.38	2003		56388	Urbis	Axia 8 LED 350mA	10 Watts	6.00 Metres	Stainless Steel	
Y	8	STREET LIGHTING	RUNSWICK ROAD	GRIMSBY	528799.5	408988.72	2003		56389	Urbis	Axia 8 LED 350mA	10 Watts	5.00 Metres	Galvanised Steel	
Y	9	STREET LIGHTING	RUNSWICK ROAD	GRIMSBY	528774.73	409055.69	2003		56390	Urbis	Axia 8 LED 350mA	10 Watts	5.00 Metres	Galvanised Steel	
Y	10	STREET LIGHTING	RUNSWICK ROAD	GRIMSBY	528778.55	409038.07	2003		56391	1 Urbis LED	Teceo 40 LED 500mA	64 Watts	8.00 Metres	Stainless Steel	
Y	11	STREET LIGHTING	RUNSWICK ROAD	GRIMSBY	528765.6	409020.76	1995		56392	1 Urbis LED	Teceo 40 LED 500mA	64 Watts	8.00 Metres	Galvanised Steel	
Y	12	STREET LIGHTING	RUNSWICK ROAD	GRIMSBY	528733.55	409025.17	2003		56393	1 Urbis LED	Teceo 40 LED 500mA	64 Watts	8.00 Metres	Stainless Steel	
Y	13	STREET LIGHTING	RUNSWICK ROAD	GRIMSBY	528727.85	409043.34	2003		56394	Urbis	Axia 8 LED 350mA	10 Watts	5.00 Metres	Galvanised Steel	
Y	14	STREET LIGHTING	RUNSWICK ROAD	GRIMSBY	528739.69	408990.06	2003		56395	Urbis	Axia 8 LED 350mA	10 Watts	5.00 Metres	Stainless Steel	
Y	15	STREET LIGHTING	RUNSWICK ROAD	GRIMSBY	528712.51	409058.93	2003		56396	Urbis	Axia 8 LED 350mA	10 Watts	5.00 Metres	Stainless Steel	
Y	16	STREET LIGHTING	RUNSWICK ROAD	GRIMSBY	528730.51	408968.84	2003		56397	Urbis	Axia 8 LED 350mA	10 Watts	5.00 Metres	Galvanised Steel	
Y	17	STREET LIGHTING	RUNSWICK ROAD	GRIMSBY	528718.27	409005.14	2003		56398	1 Urbis LED	Teceo 40 LED 500mA	64 Watts	8.00 Metres	Stainless Steel	
Y	18	STREET LIGHTING	RUNSWICK ROAD	GRIMSBY	528706.44	409036.9	2003		56399	Urbis	Axia 8 LED 350mA	10 Watts	5.00 Metres	Galvanised Steel	
Y	19	STREET LIGHTING	RUNSWICK ROAD	GRIMSBY	528689.25	409010.58	1995		56400	1 Urbis LED	Teceo 40 LED 500mA	64 Watts	8.00 Metres	Galvanised Steel	
Y	20	STREET LIGHTING	RUNSWICK ROAD	GRIMSBY	528664.82	408991.66	1995		56401	1 Urbis LED	Teceo 40 LED 500mA	64 Watts	8.00 Metres	Galvanised Steel	
Y	21	STREET LIGHTING	RUNSWICK ROAD	GRIMSBY	528623.18	408991.09	1995		56402	1 Urbis LED	Teceo 40 LED 500mA	64 Watts	8.00 Metres	Galvanised Steel	
Y	22	STREET LIGHTING	RUNSWICK ROAD	GRIMSBY	528587.26	408970.13	2021	16/02/2021	68277	Urbis	Teceo 40 LED 500mA	64 Watts	8.00 Metres	Galvanised Steel	
Y	23	STREET LIGHTING	RUNSWICK ROAD	GRIMSBY				30/05/2025	70222	Urbis	Teceo 40 LED 500mA	64 Watts	8.00 Metres	Galvanised Steel	
Y	24	STREET LIGHTING	RUNSWICK ROAD	GRIMSBY	528508.78	408952.53	2024	30/10/2024	70030	Urbis	Teceo 40 LED 500mA	64 Watts	8.00 Metres	Galvanised Steel	
Y	25	STREET LIGHTING	RUNSWICK ROAD	GRIMSBY	528468.37	408947.54	1995		56406	1 Urbis LED	Teceo 40 LED 500mA	64 Watts	8.00 Metres	Galvanised Steel	
Y	1	STREET LIGHTING	ST ANDREWS DRIVE	GRIMSBY	528684	408007	2005		57568	1 Urbis LED	Teceo 16 LED 500mA	28 Watts	6.00 Metres	Stainless Steel	
Y	2	STREET LIGHTING	ST ANDREWS DRIVE	GRIMSBY	528705	407980	2005		57569	1 Urbis LED	Teceo 16 LED 500mA	28 Watts	6.00 Metres	Stainless Steel	
Y	3	STREET LIGHTING	ST ANDREWS DRIVE	GRIMSBY	528744.28	407967.67	2005		57570	1 Urbis LED	Teceo 16 LED 500mA	28 Watts	6.00 Metres	Stainless Steel	
Y	4	STREET LIGHTING	ST ANDREWS DRIVE	GRIMSBY	528762.31	407985.55	2004		57571	1 Urbis LED	Teceo 16 LED 500mA	28 Watts	6.00 Metres	Stainless Steel	
Y	5	STREET LIGHTING	ST ANDREWS DRIVE	GRIMSBY	528769	407954	2005		57572	1 Urbis LED	Teceo 16 LED 500mA	28 Watts	6.00 Metres	Stainless Steel	
Y	6	STREET LIGHTING	ST ANDREWS DRIVE	GRIMSBY	528808.99	407979.1	2004		57573	1 Urbis LED	Teceo 16 LED 500mA	28 Watts	6.00 Metres	Stainless Steel	
Y	7	STREET LIGHTING	ST ANDREWS DRIVE	GRIMSBY	528801	407941	2005		57574	1 Urbis LED	Axia 16 LED 500mA	28 Watts	6.00 Metres	Stainless Steel	
Y	8	STREET LIGHTING	ST ANDREWS DRIVE	GRIMSBY	528824.03	407953.52	2004		57575	1 Urbis LED	Teceo 16 LED 500mA	28 Watts	6.00 Metres	Stainless Steel	
Y	9	STREET LIGHTING	ST ANDREWS DRIVE	GRIMSBY	528833	407921	2005		57576	1 Urbis LED	Teceo 16 LED 500mA	28 Watts	6.00 Metres	Stainless Steel	
Y	10	STREET LIGHTING	ST ANDREWS DRIVE	GRIMSBY	528850	407894	2005		57577	1 Urbis LED	Teceo 16 LED 500mA	28 Watts	6.00 Metres	Stainless Steel	
Y	11	STREET LIGHTING	ST ANDREWS DRIVE	GRIMSBY	528878.91	407872.85	2004		57578	1 Urbis LED	Teceo 16 LED 500mA	28 Watts	6.00 Metres	Stainless Steel	
Y	12	STREET LIGHTING	ST ANDREWS DRIVE	GRIMSBY	528884.38	407843.75	2004		57579	1 Urbis LED	Teceo 16 LED 500mA	28 Watts	6.00 Metres	Stainless Steel	
Y	1	STREET LIGHTING	ST MARYS CLOSE	GRIMSBY	529077.48	408544.53	2020	10/06/2020	67858	Urbis	Axia 16 LED 350mA	19 Watts	6.00 Metres	Galvanised Steel	
Y	2	STREET LIGHTING	ST MARYS CLOSE	GRIMSBY	529049.34	408524.37	2020	10/06/2020	68052	Urbis	Axia 16 LED 350mA	19 Watts	6.00 Metres	Galvanised Steel	
Y	3	STREET LIGHTING	ST MARYS CLOSE	GRIMSBY	529019.73	408511.34	2020	10/06/2020	68053	Urbis	Teceo 24 LED 500mA	40 Watts	6.00 Metres	Galvanised Steel	
Y	1	STREET LIGHTING	SAMUEL AVENUE	GRIMSBY	528684	408728.2	2009		56518	1 Urbis LED	Axia 16 LED 500mA	28 Watts	6.00 Metres	Steel	
Y	2	STREET LIGHTING	SAMUEL AVENUE	GRIMSBY	528670.7	408757.8	2009		56519	1 Urbis LED	Axia 16 LED 500mA	28 Watts	6.00 Metres	Steel	
Y	3	STREET LIGHTING	SAMUEL AVENUE	GRIMSBY	528666.6	408790.1	2009		56520	1 Urbis LED	Axia 16 LED 500mA	28 Watts	6.00 Metres	Steel	
Y	4	STREET LIGHTING	SAMUEL AVENUE	GRIMSBY	528652.5	408821	2009		56521	1 Urbis LED	Axia 16 LED 500mA	28 Watts	6.00 Metres	Steel	
Y	5	STREET LIGHTING	SAMUEL AVENUE	GRIMSBY	528625.4	408839.7	2009		56522	1 Urbis LED	Axia 16 LED 500mA	28 Watts	6.00 Metres	Steel	
Y	6	STREET LIGHTING	SAMUEL AVENUE	GRIMSBY	528594.1	408829.6	2009		56523	1 Urbis LED	Axia 16 LED 500mA	28 Watts	6.00 Metres	Steel	
Y	1	STREET LIGHTING	THIRKLEBY CRESCENT	GRIMSBY	528735.96	407888.38	2016	30/06/2016	59077	1 Urbis LED	Axia 16 LED 500mA	28 Watts	6.00 Metres	Galvanised Steel	
Y	2	STREET LIGHTING	THIRKLEBY CRESCENT	GRIMSBY	528701.91	407908.82	2016	30/06/2016	59078	1 Urbis LED	Axia 16 LED 500mA	28 Watts	6.00 Metres	Galvanised Steel	
Y	3	STREET LIGHTING	THIRKLEBY CRESCENT	GRIMSBY	528671.53	407921.35	2016	30/06/2016	59079	1 Urbis LED	Axia 16 LED 500mA	28 Watts	6.00 Metres	Galvanised Steel	
Y	4	STREET LIGHTING	THIRKLEBY CRESCENT	GRIMSBY	528632.67	407916.47	2016	30/06/2016	59080	1 Urbis LED	Axia 16 LED 500mA	28 Watts	6.00 Metres	Galvanised Steel	
Y	5	STREET LIGHTING	THIRKLEBY CRESCENT	GRIMSBY	528601.15	407895.84	2016	30/06/2016	59081	1 Urbis LED	Axia 16 LED 500mA	28 Watts	6.00 Metres	Galvanised Steel	
Y	6	STREET LIGHTING	THIRKLEBY CRESCENT	GRIMSBY	528565.58	407885.02	2016	30/06/2016	59082	1 Urbis LED	Axia 16 LED 500mA	28 Watts	6.00 Metres	Galvanised Steel	
Y	7	STREET LIGHTING	THIRKLEBY CRESCENT	GRIMSBY	528551.66	407871.91	2016	30/06/2016	59083	1 Urbis LED	Axia 16 LED 500mA	28 Watts	6.00 Metres	Galvanised Steel	
Y	8	STREET LIGHTING	THIRKLEBY CRESCENT	GRIMSBY	528526.97	407883.75	2016	30/06/2016	59084	1 Urbis LED	Axia 16 LED 500mA	28 Watts	6.00 Metres	Galvanised Steel	
Y	9	STREET LIGHTING	THIRKLEBY CRESCENT	GRIMSBY	528580.39	407839.57	2016	30/06/2016	59085	1 Urbis LED	Axia 16 LED 500mA	28 Watts	6.00 Metres	Galvanised Steel	
Y	10	STREET LIGHTING	THIRKLEBY CRESCENT	GRIMSBY	528607.44	407789.15	2016	30/06/2016	66490	1 Urbis LED	Axia 16 LED 500mA	28 Watts	6.00 Metres	Galvanised Steel	
Y	1	STREET LIGHTING	TRANBY DRIVE	GRIMSBY	528779.74	407937.54	2012		59412	1 Urbis LED	Axia 16 LED 500mA	28 Watts	6.00 Metres	Steel	
Y	2	STREET LIGHTING	TRANBY DRIVE	GRIMSBY	528758.53	407905.32	2016	27/04/2016	68501	Urbis	Axia 16 LED 500mA	28 Watts	6.00 Metres	Galvanised Steel	
Y	3	STREET LIGHTING	TRANBY DRIVE	GRIMSBY	528751.19	407876.9	2015	02/11/2015	68502	Urbis	Axia 16 LED 500mA	28 Watts	6.00 Metres	Galvanised Steel	
Y	4	STREET LIGHTING	TRANBY DRIVE	GRIMSBY	528715.14	407864.06	2016	27/04/2016	68503	Urbis	Axia 16 LED 500mA	28 Watts	6.00 Metres	Galvanised Steel	
Y	5	STREET LIGHTING	TRANBY DRIVE	GRIMSBY	528672.13	407827.05	2016	27/04/2016	68504	Urbis	Axia 16 LED 500mA	28 Watts	6.00 Metres	Galvanised Steel	
Y	6	STREET LIGHTING	TRANBY DRIVE	GRIMSBY	528637.65	407814.42	2016	27/04/2016	68505	Urbis	Axia 16 LED 500mA	28 Watts	6.00 Metres	Galvanised Steel	
Y	1	STREET LIGHTING	UNITY ROAD	GRIMSBY	529081.09	408679.07	2005		59507	1 Urbis LED	Axia 16 LED 500mA	28 Watts	6.00 Metres	Stainless Steel	
Y	2	STREET LIGHTING	UNITY ROAD	GRIMSBY	529107.95	408697.53	2004		59508	1 Urbis LED	Axia 16 LED 500mA	28 Watts	6.00 Metres	Stainless Steel	
Y	1	STREET LIGHTING	VAUGHAN AVENUE	GRIMSBY	529021.41	407959.31	1991		59529	1 Urbis LED	Teceo 24 LED 500mA	40 Watts	6.00 Metres	Galvanised Steel	
Y	2	STREET LIGHTING	VAUGHAN AVENUE	GRIMSBY	528982.2	407941.28	1996		59530	Urbis	Axia 24 LED 540mA	41 Watts	6.00 Metres	Galvanised Steel	
Y	3	STREET LIGHTING	VAUGHAN AVENUE	GRIMSBY	528956.24	407899.76	2015	30/07/2015	59531	1 Urbis LED	Teceo 24 LED 500mA	40 Watts	6.00 Metres	Galvanised Steel	
Y	4	STREET LIGHTING	VAUGHAN AVENUE	GRIMSBY	528920.89	407868.28	1996		59532	1 Urbis LED	Teceo 24 LED 500mA	40 Watts	5.00 Metres	Galvanised Steel	
Y	5	STREET LIGHTING	VAUGHAN AVENUE	GRIMSBY	528902.48	407825.84	2004		59533	1 Urbis LED	Teceo 24 LED 500mA	40 Watts	6.00 Metres	Stainless Steel	
Y	6	STREET LIGHTING	VAUGHAN AVENUE	GRIMSBY	528874.59	407796.08	2003		59534	1 Urbis LED	Teceo 24 LED 500mA	40 Watts	6.00 Metres	Stainless Steel	
Y	7	STREET LIGHTING	VAUGHAN AVENUE	GRIMSBY	528861.42	407748.14	2015	30/07/2015	59535	1 Urbis LED	Teceo 24 LED 500mA	40 Watts	6.00 Metres	Galvanised Steel	
Y	1	STREET LIGHTING	VIVIAN AVENUE	GRIMSBY	528853	408068	2002		59650	1 Urbis LED	Teceo 24 LED 500mA	40 Watts	6.00 Metres	Galvanised Steel	
Y	2	STREET LIGHTING	VIVIAN AVENUE	GRIMSBY	528860.9	408035.38	2002		59651	1 Urbis LED	Teceo 24 LED 500mA	40 Watts	6.00 Metres	Galvanised Steel	
Y	3	STREET LIGHTING	VIVIAN AVENUE	GRIMSBY	528883	408001	2001		59652	1 Urbis LED	Teceo 24 LED 500mA	40 Watts	6.00 Metres	Galvanised Steel	
Y	4	STREET LIGHTING	VIVIAN AVENUE	GRIMSBY	528913	407977	2001		59653	1 Urbis LED	Teceo 24 LED 500mA	40 Watts	6.00 Metres	Galvanised Steel	
Y	5	STREET LIGHTING	VIVIAN AVENUE	GRIMSBY	528931	407950	2001		59654	1 Urbis LED	Teceo 24 LED 500mA	40 Watts	6.00 Metres	Galvanised Steel	
Y	6	STREET LIGHTING	VIVIAN AVENUE	GRIMSBY	528940	407913	2001		59655	1 Urbis LED	Teceo 24 LED 500mA	40 Watts	6.00 Metres	Galvanised Steel	
Y	1	STREET LIGHTING	SILVERGARTH	GRIMSBY	528619.4	408054.34	1991		57221	1 Urbis LED	Teceo 16 LED 500mA	28 Watts	6.00 Metres	Galvanised Steel	
Y	2	STREET LIGHTING	SILVERGARTH	GRIMSBY	528607.25	408088.49	1991		57222	1 Urbis LED	Axia 16 LED 500mA	28 Watts	6.00 Metres	Galvanised Steel	
Y	3	STREET LIGHTING	SILVERGARTH	GRIMSBY	528610.56	408121.72	1991		57223	1 Urbis LED	Teceo 24 LED 500mA	40 Watts	6.00 Metres	Galvanised Steel	
Y	4	STREET LIGHTING	SILVERGARTH	GRIMSBY	528601.17	408147.59	1991		57224	1 Urbis LED	Teceo 16 LED 500mA	28 Watts	6.00 Metres	Galvanised Steel	
Y	5	STREET LIGHTING	SILVERGARTH	GRIMSBY	528567.11	408171.99	1991		57225	1 Urbis LED	Teceo 16 LED 500mA	28 Watts	6.00 Metres	Galvanised Steel	
Y	6	STREET LIGHTING	SILVERGARTH	GRIMSBY	528579.63	408182.21	1991		57226	1 Urbis LED	Teceo 16 LED 500mA	28 Watts	6.00 Metres	Galvanised Steel	

Y	7	STREET LIGHTING	SILVERGARTH	GRIMSBY	528613.14	408194.27	1991		57227	1 Urbis LED	Teceo 16 LED 500mA	28 Watts	6.00 Metres	Galvanised Steel	
Y	8	STREET LIGHTING	SILVERGARTH	GRIMSBY	528549.54	408217.89	2019	14/06/2019	67367	Urbis	Teceo 16 LED 500mA	28 Watts	6.00 Metres	Galvanised Steel	
Y	9	STREET LIGHTING	SILVERGARTH	GRIMSBY	528547.78	408217.93	1991		57229	1 Urbis LED	Teceo 16 LED 500mA	28 Watts	6.00 Metres	Galvanised Steel	
Y	10	STREET LIGHTING	SILVERGARTH	GRIMSBY	528511.32	408224.46	1991		57230	1 Urbis LED	Teceo 16 LED 500mA	28 Watts	6.00 Metres	Galvanised Steel	
Y	11	STREET LIGHTING	SILVERGARTH	GRIMSBY	528489.5	408245.78	2018	07/11/2018	67251	Urbis	Axia 16 LED 350mA	19 Watts	6.00 Metres	Galvanised Steel	
Y	1	STREET LIGHTING	WELLGARTH	GRIMSBY	528561.17	408030.43	1989		60191	Urbis	Axia 16 LED 350mA	19 Watts	6.00 Metres	Galvanised Steel	
Y	2	STREET LIGHTING	WELLGARTH	GRIMSBY	528586.76	408040.83	1989		60192	Urbis	Axia 16 LED 350mA	19 Watts	6.00 Metres	Galvanised Steel	
Y	3	STREET LIGHTING	WELLGARTH	GRIMSBY	528606.83	408049.76	1989		60193	Urbis	Axia 16 LED 350mA	19 Watts	6.00 Metres	Galvanised Steel	
Y	4	STREET LIGHTING	WELLGARTH	GRIMSBY	528628.19	408079.22	1989		60194	Urbis	Axia 16 LED 350mA	19 Watts	6.00 Metres	Galvanised Steel	
Y	5	STREET LIGHTING	WELLGARTH	GRIMSBY	528654.52	408079.03	1989		60195	Urbis	Axia 16 LED 350mA	19 Watts	6.00 Metres	Galvanised Steel	
Y	6	STREET LIGHTING	WELLGARTH	GRIMSBY	528676.98	408084.56	1989		60196	Urbis	Axia 16 LED 350mA	19 Watts	6.00 Metres	Galvanised Steel	
Y	1	STREET LIGHTING	GOLDGARTH	GRIMSBY	528588.17	408108.38	1989		49344	Urbis	Axia 16 LED 350mA	19 Watts	6.00 Metres	Galvanised Steel	
Y	2	STREET LIGHTING	GOLDGARTH	GRIMSBY	528560.92	408099.55	1989		49345	Urbis	Axia 16 LED 350mA	19 Watts	6.00 Metres	Galvanised Steel	
Y	3	STREET LIGHTING	GOLDGARTH	GRIMSBY	528539.93	408070.37	2008		49346	Urbis	Axia 16 LED 350mA	19 Watts	6.00 Metres	Galvanised Steel	
Y	4	STREET LIGHTING	GOLDGARTH	GRIMSBY	528533.11	408086.75	1989		49347	Urbis	Axia 16 LED 350mA	19 Watts	6.00 Metres	Galvanised Steel	
Y	5	STREET LIGHTING	GOLDGARTH	GRIMSBY	528511.39	408113.54	1989		49348	Urbis	Axia 16 LED 350mA	19 Watts	6.00 Metres	Galvanised Steel	
Y	1	STREET LIGHTING	CLEE FIELDS CLOSE	GRIMSBY	528619.65	408135.89	1988		46174	1 Urbis LED	Teceo 16 LED 500mA	28 Watts	6.00 Metres	Galvanised Steel	
Y	2	STREET LIGHTING	CLEE FIELDS CLOSE	GRIMSBY	528661.63	408140.67	1995		46175	1 Urbis LED	Teceo 16 LED 500mA	28 Watts	6.00 Metres	Galvanised Steel	
Y	1	STREET LIGHTING	BRONZEGARTH	GRIMSBY	528557.72	408232.38	1991		44851	Urbis	Axia 16 LED 350mA	19 Watts	6.00 Metres	Galvanised Steel	
Y	2	STREET LIGHTING	BRONZEGARTH	GRIMSBY	528566.74	408256.41	1991		44852	Urbis	Axia 16 LED 350mA	19 Watts	6.00 Metres	Galvanised Steel	
Y	3	STREET LIGHTING	BRONZEGARTH	GRIMSBY	528554.17	408282.48	2019	14/06/2019	67366	Urbis	Teceo 16 LED 500mA	28 Watts	6.00 Metres	Galvanised Steel	
Y	1	STREET LIGHTING	HARDYS COURT	GRIMSBY	528314.05	408932.46	2005		50143	1 Urbis LED	Teceo 24 LED 500mA	40 Watts	6.00 Metres	Stainless Steel	
Y	2	STREET LIGHTING	HARDYS COURT	GRIMSBY	528341.95	408943.47	2005		50144	1 Urbis LED	Teceo 24 LED 500mA	40 Watts	6.00 Metres	Stainless Steel	
Y	3	STREET LIGHTING	HARDYS COURT	GRIMSBY	528343.46	408960.35	2005		50145	1 Urbis LED	Teceo 24 LED 500mA	40 Watts	6.00 Metres	Stainless Steel	
Y	4	STREET LIGHTING	HARDYS COURT	GRIMSBY	528374.37	408952.05	2005		50146	1 Urbis LED	Teceo 24 LED 500mA	40 Watts	6.00 Metres	Stainless Steel	
Y	1	STREET LIGHTING	COLUMBIA ROAD	GRIMSBY	528111.08	408912.24	1991		46429	1 Urbis LED	Axia 16 LED 500mA	28 Watts	6.00 Metres	Galvanised Steel	
Y	2	STREET LIGHTING	COLUMBIA ROAD	GRIMSBY	528136.9	408913.95	1991		46430	1 Urbis LED	Axia 16 LED 500mA	28 Watts	6.00 Metres	Galvanised Steel	
Y	3	STREET LIGHTING	COLUMBIA ROAD	GRIMSBY	528154.5	408934.52	1991		46431	1 Urbis LED	Axia 16 LED 500mA	28 Watts	6.00 Metres	Galvanised Steel	
Y	4	STREET LIGHTING	COLUMBIA ROAD	GRIMSBY	528178.68	408946.86	1991		46432	1 Urbis LED	Axia 16 LED 500mA	28 Watts	6.00 Metres	Galvanised Steel	
Y	5	STREET LIGHTING	COLUMBIA ROAD	GRIMSBY	528202.09	408958.69	1991		46433	1 Urbis LED	Axia 16 LED 500mA	28 Watts	6.00 Metres	Galvanised Steel	
Y	6	STREET LIGHTING	COLUMBIA ROAD	GRIMSBY	528226.02	408970.78	1991		46434	1 Urbis LED	Axia 16 LED 500mA	28 Watts	6.00 Metres	Galvanised Steel	
Y	7	STREET LIGHTING	COLUMBIA ROAD	GRIMSBY	528253.11	408972.3	1991		46435	1 Urbis LED	Axia 16 LED 500mA	28 Watts	6.00 Metres	Galvanised Steel	
Y	8	STREET LIGHTING	COLUMBIA ROAD	GRIMSBY	528278.17	408996.92	1991		46436	1 Urbis LED	Axia 16 LED 500mA	28 Watts	6.00 Metres	Galvanised Steel	
Y	9	STREET LIGHTING	COLUMBIA ROAD	GRIMSBY	528304.88	408998.38	1991		46437	1 Urbis LED	Axia 16 LED 500mA	28 Watts	6.00 Metres	Galvanised Steel	
Y	10	STREET LIGHTING	COLUMBIA ROAD	GRIMSBY	528327.79	409009.58	1991		46438	1 Urbis LED	Axia 16 LED 500mA	28 Watts	6.00 Metres	Galvanised Steel	
Y	11	STREET LIGHTING	COLUMBIA ROAD	GRIMSBY	528347.28	409031.29	1991		46439	1 Urbis LED	Axia 16 LED 500mA	28 Watts	6.00 Metres	Galvanised Steel	
Y	12	STREET LIGHTING	COLUMBIA ROAD	GRIMSBY	528376.14	409034.01	1991		46440	1 Urbis LED	Axia 16 LED 500mA	28 Watts	6.00 Metres	Galvanised Steel	
Y	13	STREET LIGHTING	COLUMBIA ROAD	GRIMSBY	528403.36	409059.52	1991		46441	1 Urbis LED	Axia 16 LED 500mA	28 Watts	6.00 Metres	Galvanised Steel	
Y	14	STREET LIGHTING	COLUMBIA ROAD	GRIMSBY	528431.08	409073.63	1991		46442	1 Urbis LED	Axia 16 LED 500mA	28 Watts	6.00 Metres	Galvanised Steel	
Y	15	STREET LIGHTING	COLUMBIA ROAD	GRIMSBY	528455.25	409085.34	1991		46443	1 Urbis LED	Axia 16 LED 500mA	28 Watts	6.00 Metres	Galvanised Steel	
Y	16	STREET LIGHTING	COLUMBIA ROAD	GRIMSBY	528487.15	409089.33	1991		46444	1 Urbis LED	Axia 16 LED 500mA	28 Watts	6.00 Metres	Galvanised Steel	
Y	17	STREET LIGHTING	COLUMBIA ROAD	GRIMSBY	528505.88	409111.29	1991		46445	1 Urbis LED	Axia 16 LED 500mA	28 Watts	6.00 Metres	Galvanised Steel	
Y	18	STREET LIGHTING	COLUMBIA ROAD	GRIMSBY	528537.28	409114.71	1991		46446	1 Urbis LED	Axia 16 LED 500mA	28 Watts	6.00 Metres	Galvanised Steel	
Y	19	STREET LIGHTING	COLUMBIA ROAD	GRIMSBY	528555	409135.91	1991		46447	1 Urbis LED	Axia 16 LED 500mA	28 Watts	6.00 Metres	Galvanised Steel	
Y	20	STREET LIGHTING	COLUMBIA ROAD	GRIMSBY	528573.61	409145.3	1991		46448	1 Urbis LED	Axia 16 LED 500mA	28 Watts	6.00 Metres	Galvanised Steel	
Y	21	STREET LIGHTING	COLUMBIA ROAD	GRIMSBY	528600.57	409158.91	1991		46449	1 Urbis LED	Axia 16 LED 500mA	28 Watts	6.00 Metres	Galvanised Steel	
Y	22	STREET LIGHTING	COLUMBIA ROAD	GRIMSBY	528628.29	409160.62	1991		46450	1 Urbis LED	Axia 16 LED 500mA	28 Watts	6.00 Metres	Galvanised Steel	
Y	23	STREET LIGHTING	COLUMBIA ROAD	GRIMSBY	528652.46	409172.71	1991		46451	1 Urbis LED	Axia 16 LED 500mA	28 Watts	6.00 Metres	Galvanised Steel	
Y	24	STREET LIGHTING	COLUMBIA ROAD	GRIMSBY	528680.06	409186.57	1991		46452	1 Urbis LED	Axia 16 LED 500mA	28 Watts	6.00 Metres	Galvanised Steel	
Y	25	STREET LIGHTING	COLUMBIA ROAD	GRIMSBY	528705.63	409199.55	1991		46453	1 Urbis LED	Axia 16 LED 500mA	28 Watts	6.00 Metres	Galvanised Steel	
Y	26	STREET LIGHTING	COLUMBIA ROAD	GRIMSBY	528724.87	409221.26	1991		46454	1 Urbis LED	Axia 16 LED 500mA	28 Watts	6.00 Metres	Galvanised Steel	
Y	27	STREET LIGHTING	COLUMBIA ROAD	GRIMSBY	528748.41	409232.84	1991		46455	1 Urbis LED	Axia 16 LED 500mA	28 Watts	6.00 Metres	Galvanised Steel	
Y	28	STREET LIGHTING	COLUMBIA ROAD	GRIMSBY	528769.8	409231.45	1991		46456	1 Urbis LED	Axia 16 LED 500mA	28 Watts	6.00 Metres	Galvanised Steel	
Y	1	STREET LIGHTING	FAIRMONT ROAD	GRIMSBY	528083.49	408964.59	1991		48283	1 Urbis LED	Axia 16 LED 500mA	28 Watts	6.00 Metres	Galvanised Steel	
Y	2	STREET LIGHTING	FAIRMONT ROAD	GRIMSBY	528112.09	408978.63	1991		48284	1 Urbis LED	Axia 16 LED 500mA	28 Watts	6.00 Metres	Galvanised Steel	
Y	3	STREET LIGHTING	FAIRMONT ROAD	GRIMSBY	528131.2	409000.47	1991		48285	Urbis	Axia 16 LED 350mA	19 Watts	6.00 Metres	Galvanised Steel	
Y	4	STREET LIGHTING	FAIRMONT ROAD	GRIMSBY	528158.04	409001.92	1991		48286	1 Urbis LED	Axia 16 LED 500mA	28 Watts	6.00 Metres	Galvanised Steel	
Y	5	STREET LIGHTING	FAIRMONT ROAD	GRIMSBY	528176.9	409023.31	1991		48287	1 Urbis LED	Axia 16 LED 500mA	28 Watts	6.00 Metres	Galvanised Steel	
Y	6	STREET LIGHTING	FAIRMONT ROAD	GRIMSBY	528206.52	409026.16	1991		48288	1 Urbis LED	Axia 16 LED 500mA	28 Watts	6.00 Metres	Galvanised Steel	
Y	7	STREET LIGHTING	FAIRMONT ROAD	GRIMSBY	528231.32	409038.5	1991		48289	1 Urbis LED	Axia 16 LED 500mA	28 Watts	6.00 Metres	Galvanised Steel	
Y	8	STREET LIGHTING	FAIRMONT ROAD	GRIMSBY	528244.95	409058.2	2024	20/09/2024	69984	Urbis	Axia 24 LED 500mA	28 Watts	6.00 Metres	Galvanised Steel	
Y	9	STREET LIGHTING	FAIRMONT ROAD	GRIMSBY	528269.04	409070.14	1991		48291	1 Urbis LED	Axia 16 LED 500mA	28 Watts	6.00 Metres	Galvanised Steel	
Y	10	STREET LIGHTING	FAIRMONT ROAD	GRIMSBY	528302.71	409074.76	1991		48292	1 Urbis LED	Axia 16 LED 500mA	28 Watts	6.00 Metres	Galvanised Steel	
Y	11	STREET LIGHTING	FAIRMONT ROAD	GRIMSBY	528328.54	409087.61	1991		48293	1 Urbis LED	Axia 16 LED 500mA	28 Watts	6.00 Metres	Galvanised Steel	
Y	12	STREET LIGHTING	FAIRMONT ROAD	GRIMSBY	528351.94	409100.13	2024	20/09/2024	70120	Urbis	Axia 24 LED 500mA	28 Watts	6.00 Metres	Galvanised Steel	
Y	13	STREET LIGHTING	FAIRMONT ROAD	GRIMSBY	528379.7	409113.74	1991		48295	1 Urbis LED	Axia 16 LED 500mA	28 Watts	6.00 Metres	Galvanised Steel	
Y	14	STREET LIGHTING	FAIRMONT ROAD	GRIMSBY	528404.51	409125.7	1991		48296	1 Urbis LED	Axia 16 LED 500mA	28 Watts	6.00 Metres	Galvanised Steel	
Y	15	STREET LIGHTING	FAIRMONT ROAD	GRIMSBY	528432.61	409139.81	1991		48297	1 Urbis LED	Axia 16 LED 500mA	28 Watts	6.00 Metres	Galvanised Steel	
Y	16	STREET LIGHTING	FAIRMONT ROAD	GRIMSBY	528456.89	409152.56	2024	20/09/2024	70121	Urbis	Axia 24 LED 500mA	28 Watts	6.00 Metres	Galvanised Steel	
Y	17	STREET LIGHTING	FAIRMONT ROAD	GRIMSBY	528479.82	409163.35	1991		48299	1 Urbis LED	Axia 16 LED 500mA	28 Watts	6.00 Metres	Galvanised Steel	
Y	18	STREET LIGHTING	FAIRMONT ROAD	GRIMSBY	528503.99	409175.95	1991		48300	1 Urbis LED	Axia 16 LED 500mA	28 Watts	6.00 Metres	Galvanised Steel	
Y	19	STREET LIGHTING	FAIRMONT ROAD	GRIMSBY	528530.7	409189.17	1991		48301	1 Urbis LED	Axia 16 LED 500mA	28 Watts	6.00 Metres	Galvanised Steel	
Y	20	STREET LIGHTING	FAIRMONT ROAD	GRIMSBY	528549.44	409198.73	1991		48302	1 Urbis LED	Axia 16 LED 500mA	28 Watts	6.00 Metres	Galvanised Steel	
Y	21	STREET LIGHTING	FAIRMONT ROAD	GRIMSBY	528562.35	409217.15	1991		48303	1 Urbis LED	Axia 16 LED 500mA	28 Watts	6.00 Metres	Galvanised Steel	
Y	22	STREET LIGHTING	FAIRMONT ROAD	GRIMSBY	528592.22	409220.25	1991		48304	1 Urbis LED	Axia 16 LED 500mA	28 Watts	6.00 Metres	Galvanised Steel	
Y	23	STREET LIGHTING	FAIRMONT ROAD	GRIMSBY	528616.65	409232.34	1991		48305	1 Urbis LED	Axia 16 LED 500mA	28 Watts	6.00 Metres	Galvanised Steel	
Y	24	STREET LIGHTING	FAIRMONT ROAD	GRIMSBY	528641.58	409245.06	1991		48306	1 Urbis LED	Axia 16 LED 500mA	28 Watts	6.00 Metres	Galvanised Steel	
Y	25	STREET LIGHTING	FAIRMONT ROAD	GRIMSBY	528663.35	409267.9	1991		48307	1 Urbis LED	Axia 16 LED 500mA	28 Watts	6.00 Metres	Galvanised Steel	
Y	26	STREET LIGHTING	FAIRMONT ROAD	GRIMSBY	528693.35	409271.01	1991		48308	1 Urbis LED	Axia 16 LED 500mA	28 Watts	6.00 Metres	Galvanised Steel	
Y	27	STREET LIGHTING	FAIRMONT ROAD	GRIMSBY	528719.55	409283.98	1991		48309	1 Urbis LED	Axia 16 LED 500mA	28 Watts	6.00 Metres	Galvanised Steel	
Y	28	STREET LIGHTING	FAIRMONT ROAD	GRIMSBY	528743.48	409296.07	1991		48310	1 Urbis LED	Axia 16 LED 500mA	28 Watts	6.00 Metres	Galvanised Steel	
Y	1	STREET LIGHTING	GREETHAMS LANE	GRIMSBY	529060.25	408437.87	1997		49751	Urbis		39 Watts	5.00 Metres	Steel	
Y	2	STREET LIGHTING	GREETHAMS LANE	GRIMSBY	529047.85	408458.95	1997		49752	Urbis		39 Watts	5.00 Metres	Steel	
Y	1	STREET LIGHTING	ROSINA GROVE NORTH	GRIMSBY	528928.6	408774.44	1993		56315	Urbis	Axia 16 LED 350mA	19 Watts	5.00 Metres	Galvanised Steel	
Y	2	STREET LIGHTING	ROSINA GROVE NORTH	GRIMSBY	528918.4	408795.1	1993		56316	Urbis	Axia 16 LED 350mA	19 Watts	5.00 Metres	Galvanised Steel	
Y	1	STREET LIGHTING	DURBAN ROAD	GRIMSBY	528025.79	409101.83	1993		47659	1 Urbis LED	Teceo 48 LED 500mA	79 Watts	10.00 Metres	Galvanised Steel	
Y	2	STREET LIGHTING	DURBAN ROAD	GRIMSBY					70249						
Y	3	STREET LIGHTING	DURBAN ROAD	GRIMSBY	528079.45	409131.63	1954		47661	1 Urbis LED	Teceo 48 LED 500mA	79 Watts	8.00 Metres	Steel	
Y	4	STREET LIGHTING	DURBAN ROAD	GRIMSBY	528116.79	409140.56	1954		47662	1 Urbis LED	Teceo 48 LED 500mA	79 Watts	8.00 Metres	Steel	
Y	5	STREET LIGHTING	DURBAN ROAD	GRIMSBY	528145.53	409164.92	1954		47663	1 Urbis LED	Teceo 48 LED 500mA	79 Watts	8.00 Metres	Steel	
Y	6	STREET LIGHTING	DURBAN ROAD	GRIMSBY	528182.11	409173.21	1954		47664	1 Urbis LED	Teceo 48 LED 500mA	79 Watts	8.00 Metres	Steel	
Y	7	STREET LIGHTING	DURBAN ROAD	GRIMSBY	528206.66	409195.68	1954		47665	1 Urbis LED	Teceo 48 LED 500mA	79 Watts	8.00 Metres	Steel	
Y	8	STREET LIGHTING	DURBAN ROAD	GRIMSBY	528243.12	409203.84	1954		47666	1 Urbis LED	Teceo 48 LED 500mA	79 Watts	8.00 Metres	Steel	
Y	9	STREET LIGHTING	DURBAN ROAD	GRIMSBY	528272.11	409228.34	1954		47667	1 Urbis LED	Teceo 48 LED 500mA	79 Watts	8.00 Metres	Steel	
Y	10	STREET LIGHTING	DURBAN ROAD	GRIMSBY	528307.8	409236.25	1954		47668	1 Urbis LED	Teceo 48 LED 500mA	79 Watts	8.00 Metres	Steel	
Y	11	STREET LIGHTING	DURBAN ROAD	GRIMSBY	528336.41	409260.49	1954		47669	1 Urbis LED	Teceo 48 LED 500mA	79 Watts	8.00 Metres	Steel	
Y	12	STREET LIGHTING	DURBAN ROAD	GRIMSBY	528376.53	409270.55	1954		47670	1 Urbis LED	Teceo 48 LED 500mA	79 Watts	8.00 Metres	Steel	
Y	13	STREET LIGHTING	DURBAN ROAD	GRIMSBY	528405.26	409285.17	1954		47671	1 Urbis LED	Teceo 48 LED 500mA	79 Watts	8.00 Metres	Steel	
Y	14	STREET LIGHTING	DURBAN ROAD	GRIMSBY	528437.41	409301.18	1954		47672	1 Urbis LED	Teceo 48 LED 500mA	79 Watts	8.00 Metres	Steel	
Y	15	STREET LIGHTING	DURBAN ROAD	GRIMSBY	528466.27	409326.05	1954		47673	1 Urbis LED	Teceo 48 LED 500mA	79 Watts	8.00 Metres	Steel	
Y	16	STREET LIGHTING	DURBAN ROAD	GRIMSBY	528503.11	409346.56	1999		47674	1 Urbis LED	Teceo 48 LED 500mA	79 Watts	8.00 Metres	Galvanised Steel	
Y	17	STREET LIGHTING	DURBAN ROAD	GRIMSBY	528529.81	409358.26	1954		47675	1 Urbis LED	Teceo 48 LED 500mA	79 Watts	8.00 Metres	Steel	
Y	18	STREET LIGHTING	DURBAN ROAD	GRIMSBY	528569.43	409367.57	1954		47676	1 Urbis LED	Teceo 48 LED 500mA	79 Watts	8.00 Metres	Steel	
Y	19	STREET LIGHTING	DURBAN ROAD	GRIMSBY	528597.79	409392.19	1954		47677	1 Urbis LED	Teceo 48 LED 500mA	79 Watts	8.00 Metres	Steel	
Y	20	STREET LIGHTING	DURBAN ROAD	GRIMSBY	528636.9	409401.61	1954		47678	1 Urbis LED	Teceo 48 LED 500mA	79 Watts	8.00 Metres	Steel	
Y	21	STREET LIGHTING	DURBAN ROAD	GRIMSBY	528661.83	409426.11	2016	31/08/2016	47679	1 Urbis LED	Teceo 48 LED 500mA	79 Watts	10.00 Metres	Galvanised Steel	
Y	1	STREET LIGHTING	LICHFIELD COURT	GRIMSBY	528629.99	408934.73	1999		52504	Urbis	Axia 16 LED 350mA	19 Watts	5.00 Metres	Galvanised Steel	
Y	1	STREET LIGHTING	RUNSWICK COURT	GRIMSBY	528578.97	408923.87	1999		56380	Urbis	Axia 16 LED 350mA	19 Watts	5.00 Metres	Galvanised Steel	
Y	2	STREET LIGHTING	RUNSWICK COURT	GRIMSBY	528605.81	408951.4	1999		56381	Urbis	Axia 16 LED 350mA	19 Watts	5.00 Metres	Galvanised Steel	
Y	1	STREET LIGHTING	ACHILLE ROAD	GRIMSBY	523653.45	408257.37	2021	08/11/2021	68754	Urbis	Axia 16 LED 350mA	19 Watts	6.00 Metres	Galvanised Steel	

Y	2	STREET LIGHTING	ACHILLE ROAD	GRIMSBY	523679.46	408240.55	1970		42710	Urbis	Axia 16 LED 350mA	19 Watts	5.00 Metres	Galvanised Steel	
Y	3	STREET LIGHTING	ACHILLE ROAD	GRIMSBY	523708.75	408237.53	1970		42711	Urbis	Axia 16 LED 350mA	19 Watts	5.00 Metres	Galvanised Steel	
Y	4	STREET LIGHTING	ACHILLE ROAD	GRIMSBY	523734.84	408220.4	2019	03/10/2019	67615	Urbis	Axia 24 LED 500mA	28 Watts	6.00 Metres	Galvanised Steel	
Y	5	STREET LIGHTING	ACHILLE ROAD	GRIMSBY	523769.64	408205.31	1970		42713	Urbis	Axia 16 LED 350mA	19 Watts	5.00 Metres	Steel	
Y	6	STREET LIGHTING	ACHILLE ROAD	GRIMSBY	523794.82	408227.02	1970		42714	Urbis	Axia 16 LED 350mA	19 Watts	5.00 Metres	Steel	
Y	7	STREET LIGHTING	ACHILLE ROAD	GRIMSBY	523786.46	408250.95	1970		42715	Urbis	Axia 16 LED 350mA	19 Watts	5.00 Metres	Steel	
Y	8	STREET LIGHTING	ACHILLE ROAD	GRIMSBY				28/05/2025	70219	Urbis	Axia 16 LED 350mA	19 Watts	6.00 Metres	Galvanised Steel	
Y	9	STREET LIGHTING	ACHILLE ROAD	GRIMSBY	523753.29	408324.23	1970		42717	Urbis	Axia 16 LED 350mA	19 Watts	5.00 Metres	Steel	
Y	10	STREET LIGHTING	ACHILLE ROAD	GRIMSBY	523732.92	408344.8	1970		42718	Urbis	Axia 16 LED 350mA	19 Watts	5.00 Metres	Steel	
Y	11	STREET LIGHTING	ACHILLE ROAD	GRIMSBY	523726.59	408378.28	1970		42719	Urbis	Axia 16 LED 350mA	19 Watts	5.00 Metres	Steel	
Y	12	STREET LIGHTING	ACHILLE ROAD	GRIMSBY	523700.38	408365.05	1970		42720	Urbis	Axia 16 LED 350mA	19 Watts	5.00 Metres	Steel	
Y	13	STREET LIGHTING	ACHILLE ROAD	GRIMSBY	523663.17	408360.56	1970		42721	Urbis	Axia 16 LED 350mA	19 Watts	5.00 Metres	Steel	
Y	1	STREET LIGHTING	AFRICA CLOSE	GRIMSBY	523922.95	407727.13	1971		42758	Urbis	Axia 16 LED 350mA	19 Watts	5.00 Metres	Steel	
Y	2	STREET LIGHTING	AFRICA CLOSE	GRIMSBY	523929.86	407714.21	2019	03/10/2019	67618	Urbis	Axia 16 LED 350mA	19 Watts	6.00 Metres	Galvanised Steel	
Y	3	STREET LIGHTING	AFRICA CLOSE	GRIMSBY	523938.77	407661.63	1971		42760	Urbis	Teceo 24 LED 500mA	40 Watts	5.00 Metres	Galvanised Steel	
Y	1	STREET LIGHTING	AJAX CLOSE	GRIMSBY	523865.36	407704.78	2003		42805	1 Urbis LED	Axia 16 LED 500mA	28 Watts	6.00 Metres	Stainless Steel	
Y	2	STREET LIGHTING	AJAX CLOSE	GRIMSBY	523861.58	407677.16	2005		42806	1 Urbis LED	Axia 16 LED 500mA	28 Watts	6.00 Metres	Stainless Steel	
Y	3	STREET LIGHTING	AJAX CLOSE	GRIMSBY	523877.46	407645.03	2019	03/10/2019	67616	Urbis	Axia 16 LED 350mA	19 Watts	6.00 Metres	Galvanised Steel	
Y	4	STREET LIGHTING	AJAX CLOSE	GRIMSBY	523881.25	407608.54	2019	03/10/2019	67801	Urbis	Axia 16 LED 350mA	19 Watts	6.00 Metres	Galvanised Steel	
Y	5	STREET LIGHTING	AJAX CLOSE	GRIMSBY	523910.02	407621.25	2019	03/10/2019	67802	Urbis	Axia 16 LED 350mA	19 Watts	6.00 Metres	Galvanised Steel	
Y	6	STREET LIGHTING	AJAX CLOSE	GRIMSBY	523943.56	407617.57	2019	03/10/2019	67803	Urbis	Axia 16 LED 350mA	19 Watts	6.00 Metres	Galvanised Steel	
Y	7	STREET LIGHTING	AJAX CLOSE	GRIMSBY	523978.14	407629.63	2019	03/10/2019	67804	Urbis	Axia 16 LED 350mA	19 Watts	6.00 Metres	Galvanised Steel	
Y	1	STREET LIGHTING	BELLEISLE ROAD	GRIMSBY	523685.28	408148.53	1992		43967	Urbis	Axia 16 LED 350mA	19 Watts	5.00 Metres	Galvanised Steel	
Y	2	STREET LIGHTING	BELLEISLE ROAD	GRIMSBY	523667.06	408128.09	1969		43968	Urbis	Axia 16 LED 350mA	19 Watts	5.00 Metres	Galvanised Steel	
Y	3	STREET LIGHTING	BELLEISLE ROAD	GRIMSBY	523667.94	408108.66	1969		43969	Urbis	Axia 16 LED 350mA	19 Watts	5.00 Metres	Galvanised Steel	
Y	4	STREET LIGHTING	BELLEISLE ROAD	GRIMSBY	523654.4	408095.56	2005		43970	Urbis	Axia 16 LED 350mA	19 Watts	6.00 Metres	Stainless Steel	
Y	5	STREET LIGHTING	BELLEISLE ROAD	GRIMSBY	523654.4	408065.24	2000		43971	Urbis	Axia 16 LED 350mA	19 Watts	5.00 Metres	Galvanised Steel	
Y	6	STREET LIGHTING	BELLEISLE ROAD	GRIMSBY	523645.92	408038.03	2005		43972	Urbis	Axia 16 LED 350mA	19 Watts	6.00 Metres	Stainless Steel	
Y	7	STREET LIGHTING	BELLEISLE ROAD	GRIMSBY	523657.18	408024.23	1969		43973	Urbis	Axia 16 LED 350mA	19 Watts	5.00 Metres	Galvanised Steel	
Y	8	STREET LIGHTING	BELLEISLE ROAD	GRIMSBY	523651.49	408002.65	1968		43974	Urbis	Axia 16 LED 350mA	19 Watts	5.00 Metres	Steel	
Y	9	STREET LIGHTING	BELLEISLE ROAD	GRIMSBY	523673.89	408001.58	1969		43975	Urbis	Axia 16 LED 350mA	19 Watts	5.00 Metres	Galvanised Steel	
Y	10	STREET LIGHTING	BELLEISLE ROAD	GRIMSBY	523639.84	408017.15	1969		43976	Urbis	Axia 16 LED 350mA	19 Watts	6.00 Metres	Galvanised Steel	
Y	11	STREET LIGHTING	BELLEISLE ROAD	GRIMSBY	523606.3	408003.67	1969		43977	Urbis	Axia 16 LED 350mA	19 Watts	6.00 Metres	Galvanised Steel	
Y	12	STREET LIGHTING	BELLEISLE ROAD	GRIMSBY	523584.27	407988.04	1969		43978	Urbis	Axia 16 LED 350mA	19 Watts	6.00 Metres	Galvanised Steel	
Y	1	STREET LIGHTING	FOOTPATH FROM BELLEISLE ROAD TO	GRIMSBY	523682.95	407998.68	2006		48798	Urbis	Axia 8 LED 350mA	10 Watts	6.00 Metres	Galvanised Steel	
Y	2	STREET LIGHTING	FOOTPATH FROM BELLEISLE ROAD TO	GRIMSBY	523689.21	407973.1	2006		48799	Urbis	Axia 8 LED 350mA	10 Watts	6.00 Metres	Galvanised Steel	
Y	3	STREET LIGHTING	FOOTPATH FROM BELLEISLE ROAD TO	GRIMSBY	523692.88	407948.23	1969		48800	Urbis	Axia 8 LED 350mA	10 Watts	6.00 Metres	Galvanised Steel	
Y	4	STREET LIGHTING	FOOTPATH FROM BELLEISLE ROAD TO	GRIMSBY	523704.02	407925.89	1969		48801	Urbis	Axia 8 LED 350mA	10 Watts	5.00 Metres	Galvanised Steel	
Y	1	STREET LIGHTING	BRACKEN PLACE	GRIMSBY	523378.53	408756.66	1963		44468	Urbis	Axia 16 LED 350mA	19 Watts	5.00 Metres	Steel	
Y	2	STREET LIGHTING	BRACKEN PLACE	GRIMSBY	523406.88	408769.82	1963		44469	Urbis	Axia 16 LED 350mA	19 Watts	5.00 Metres	Steel	
Y	3	STREET LIGHTING	BRACKEN PLACE	GRIMSBY	523434.89	408796.93	2021	19/05/2021	68443	Urbis	Axia 16 LED 350mA	19 Watts	6.00 Metres	Galvanised Steel	
Y	1	STREET LIGHTING	BRITANNIA CRESCENT	GRIMSBY	523650.77	408300.68	1992		44738	1 Urbis LED	Axia 16 LED 500mA	28 Watts	5.00 Metres	Galvanised Steel	
Y	2	STREET LIGHTING	BRITANNIA CRESCENT	GRIMSBY	523693.33	408311.93	2019	08/10/2019	67652	Urbis	Axia 16 LED 500mA	28 Watts	6.00 Metres	Galvanised Steel	
Y	3	STREET LIGHTING	BRITANNIA CRESCENT	GRIMSBY	523730.75	408316.65	2003		44740	1 Urbis LED	Axia 16 LED 500mA	28 Watts	6.00 Metres	Stainless Steel	
Y	1	STREET LIGHTING	BYWOOD PLACE	GRIMSBY	523428.03	408696.47	1963		45056	Urbis	Axia 16 LED 350mA	19 Watts	5.00 Metres	Steel	
Y	2	STREET LIGHTING	BYWOOD PLACE	GRIMSBY	523461.91	408713.96	1963		45057	Urbis	Axia 16 LED 350mA	19 Watts	5.00 Metres	Steel	
Y	3	STREET LIGHTING	BYWOOD PLACE	GRIMSBY	523483.09	408739.47	1963		45058	Urbis	Axia 16 LED 350mA	19 Watts	5.00 Metres	Steel	
Y	1	STREET LIGHTING	CANDLESBY ROAD	GRIMSBY	523293.06	409155.25	1968		45204	Urbis	Axia 16 LED 350mA	19 Watts	5.00 Metres	Steel	
Y	2	STREET LIGHTING	CANDLESBY ROAD	GRIMSBY	523282.75	409181.86	1968		45205	Urbis	Axia 16 LED 350mA	19 Watts	5.00 Metres	Steel	
Y	3	STREET LIGHTING	CANDLESBY ROAD	GRIMSBY	523262.33	409194	2022	10/11/2022	69118	Urbis	Axia 16 LED 350mA	19 Watts	6.00 Metres	Galvanised Steel	
Y	4	STREET LIGHTING	CANDLESBY ROAD	GRIMSBY	523255.68	409210.49	1968		45207	Urbis	Axia 16 LED 350mA	19 Watts	5.00 Metres	Steel	
Y	5	STREET LIGHTING	CANDLESBY ROAD	GRIMSBY	523229.17	409220.71	1968		45208	Urbis	Axia 16 LED 350mA	19 Watts	5.00 Metres	Steel	
Y	6	STREET LIGHTING	CANDLESBY ROAD	GRIMSBY	523205.6	409241.97	1968		45209	Urbis	Axia 16 LED 350mA	19 Watts	6.00 Metres	Galvanised Steel	
Y	7	STREET LIGHTING	CANDLESBY ROAD	GRIMSBY	523192.9	409266.83	1968		45210	Urbis	Axia 16 LED 350mA	19 Watts	6.00 Metres	Galvanised Steel	
Y	8	STREET LIGHTING	CANDLESBY ROAD	GRIMSBY	523199.15	409301.44	1968		45211	Urbis	Axia 16 LED 350mA	19 Watts	6.00 Metres	Galvanised Steel	
Y	9	STREET LIGHTING	CANDLESBY ROAD	GRIMSBY	523171.9	409324.55	1968		45212	Urbis	Axia 16 LED 350mA	19 Watts	6.00 Metres	Galvanised Steel	
Y	1	STREET LIGHTING	THE CLOISTERS	GRIMSBY	523731.1	409072.94	2019	23/07/2019	67488	Urbis	AXIA 16 LED 390mA	21 Watts	6.00 Metres	Galvanised Steel	
Y	2	STREET LIGHTING	THE CLOISTERS	GRIMSBY	523709.59	409091.71	2019	23/07/2019	67495	Urbis	AXIA 16 LED 390mA	21 Watts	6.00 Metres	Galvanised Steel	
Y	3	STREET LIGHTING	THE CLOISTERS	GRIMSBY	523671.01	409106.24	2019	23/07/2019	67673	Urbis	AXIA 16 LED 390mA	21 Watts	6.00 Metres	Galvanised Steel	
Y	4	STREET LIGHTING	THE CLOISTERS	GRIMSBY	523660.27	409129.54	2019	23/07/2019	67674	Urbis	AXIA 16 LED 390mA	21 Watts	6.00 Metres	Galvanised Steel	
Y	5	STREET LIGHTING	THE CLOISTERS	GRIMSBY	523673.5	409152.22	2019	23/07/2019	67675	Urbis	AXIA 16 LED 390mA	21 Watts	6.00 Metres	Galvanised Steel	
Y	6	STREET LIGHTING	THE CLOISTERS	GRIMSBY	523700.02	409169.92	2019	23/07/2019	67676	Urbis	AXIA 16 LED 390mA	21 Watts	6.00 Metres	Galvanised Steel	
Y	1	STREET LIGHTING	COLLINGWOOD CRESCENT	GRIMSBY	523756.23	407641.38	1973		46403	Urbis	Axia 16 LED 350mA	19 Watts	5.00 Metres	Galvanised Steel	
Y	2	STREET LIGHTING	COLLINGWOOD CRESCENT	GRIMSBY	523750.41	407607.14	2011		46404	Urbis	Axia 16 LED 350mA	19 Watts	6.00 Metres	Galvanised Steel	
Y	3	STREET LIGHTING	COLLINGWOOD CRESCENT	GRIMSBY	523730.91	407586.32	1967		46405	Urbis	Axia 16 LED 350mA	19 Watts	5.00 Metres	Galvanised Steel	
Y	4	STREET LIGHTING	COLLINGWOOD CRESCENT	GRIMSBY	523699.68	407592.96	2019	03/10/2019	67617	Urbis	Axia 16 LED 350mA	19 Watts	6.00 Metres	Galvanised Steel	
Y	5	STREET LIGHTING	COLLINGWOOD CRESCENT	GRIMSBY	523665.22	407586.56	2019	03/10/2019	67805	Urbis	Axia 16 LED 350mA	19 Watts	6.00 Metres	Galvanised Steel	
Y	6	STREET LIGHTING	COLLINGWOOD CRESCENT	GRIMSBY	523625.1	407577.9	1967		46408	Urbis	Axia 16 LED 350mA	19 Watts	5.00 Metres	Galvanised Steel	
Y	7	STREET LIGHTING	COLLINGWOOD CRESCENT	GRIMSBY	523593.62	407564.17	2019	03/10/2019	67806	Urbis	Axia 16 LED 350mA	19 Watts	6.00 Metres	Galvanised Steel	
Y	8	STREET LIGHTING	COLLINGWOOD CRESCENT	GRIMSBY	523562.82	407561.01	1973		46410	Urbis	Axia 16 LED 350mA	19 Watts	5.00 Metres	Galvanised Steel	
Y	9	STREET LIGHTING	COLLINGWOOD CRESCENT	GRIMSBY	523538.64	407560.56	1967		46411	Urbis	Axia 16 LED 350mA	19 Watts	6.00 Metres	Steel	
Y	10	STREET LIGHTING	COLLINGWOOD CRESCENT	GRIMSBY	523525.23	407541.52	1967		46412	Urbis	Axia 16 LED 350mA	19 Watts	6.00 Metres	Steel	
Y	11	STREET LIGHTING	COLLINGWOOD CRESCENT	GRIMSBY	523516.11	407556.2	1967		46413	Urbis	Axia 16 LED 350mA	19 Watts	6.00 Metres	Steel	
Y	12	STREET LIGHTING	COLLINGWOOD CRESCENT	GRIMSBY	523547	407579.17	1967		46414	Urbis	Axia 16 LED 350mA	19 Watts	5.00 Metres	Steel	
Y	13	STREET LIGHTING	COLLINGWOOD CRESCENT	GRIMSBY	523528.9	407590.5	1967		46415	Urbis	Axia 16 LED 350mA	19 Watts	5.00 Metres	Steel	
Y	1	STREET LIGHTING	COLLINGWOOD CRESCENT SERVICE	GRIMSBY	523562.44	407538.6	1983		46419	1 Urbis LED	Teceo 40 LED 500mA	64 Watts	8.00 Metres	Steel	
Y	1	STREET LIGHTING	DYMOKE DRIVE	GRIMSBY	523574.05	408750.71	1994		47686	Urbis	AXIA 16 LED 390mA	21 Watts	6.00 Metres	Galvanised Steel	
Y	2	STREET LIGHTING	DYMOKE DRIVE	GRIMSBY	523551.38	408765.46	2019	23/07/2019	67487	Urbis	AXIA 16 LED 390mA	21 Watts	6.00 Metres	Galvanised Steel	
Y	3	STREET LIGHTING	DYMOKE DRIVE	GRIMSBY	523541.93	408784.24	1994		47688	Urbis	AXIA 16 LED 390mA	21 Watts	6.00 Metres	Galvanised Steel	
Y	4	STREET LIGHTING	DYMOKE DRIVE	GRIMSBY	523522.3	408792.11	1994		47689	Urbis	AXIA 16 LED 390mA	21 Watts	6.00 Metres	Galvanised Steel	
Y	5	STREET LIGHTING	DYMOKE DRIVE	GRIMSBY	523515.13	408814.01	2019	23/07/2019	67570	Urbis	AXIA 16 LED 390mA	21 Watts	6.00 Metres	Galvanised Steel	
Y	6	STREET LIGHTING	DYMOKE DRIVE	GRIMSBY	523490.39	408829.23	2019	23/07/2019	67494	Urbis	AXIA 16 LED 390mA	21 Watts	6.00 Metres	Galvanised Steel	
Y	7	STREET LIGHTING	DYMOKE DRIVE	GRIMSBY	523483.89	408853.84	2019	23/07/2019	67571	Urbis	AXIA 16 LED 390mA	21 Watts	6.00 Metres	Galvanised Steel	
Y	8	STREET LIGHTING	DYMOKE DRIVE	GRIMSBY	523503.81	408871.69	2019	23/07/2019	67572	Urbis	AXIA 16 LED 390mA	21 Watts	6.00 Metres	Galvanised Steel	
Y	9	STREET LIGHTING	DYMOKE DRIVE	GRIMSBY	523515.04	408900.99	2019	23/07/2019	67569	Urbis	AXIA 16 LED 390mA	21 Watts	6.00 Metres	Galvanised Steel	
Y	1	STREET LIGHTING	FAULDING WAY	GRIMSBY	523348.89	409209.33	1963		48427	Urbis	Axia 16 LED 350mA	19 Watts	5.00 Metres	Steel	
Y	2	STREET LIGHTING	FAULDING WAY	GRIMSBY	523314.46	409245.14	1963		48428	Urbis	Axia 16 LED 350mA	19 Watts	5.00 Metres	Steel	
Y	3	STREET LIGHTING	FAULDING WAY	GRIMSBY	523296.6	409276.34	1963		48429	Urbis	Axia 16 LED 350mA	19 Watts	5.00 Metres	Steel	
Y	4	STREET LIGHTING	FAULDING WAY	GRIMSBY	523268.8	409297.98	1963		48430	Urbis	Axia 16 LED 350mA	19 Watts	5.00 Metres	Steel	
Y	5	STREET LIGHTING	FAULDING WAY	GRIMSBY	523286.11	409325.14	1963		48431	Urbis	Axia 16 LED 350mA	19 Watts	5.00 Metres	Steel	
Y	6	STREET LIGHTING	FAULDING WAY	GRIMSBY	523319.06	409344.56	1963		48432	Urbis	Axia 16 LED 350mA	19 Watts	5.00 Metres	Steel	
Y	7	STREET LIGHTING	FAULDING WAY	GRIMSBY	523314.46	409366.84	1963		48433	Urbis	Axia 16 LED 350mA	19 Watts	5.00 Metres	Steel	
Y	8	STREET LIGHTING	FAULDING WAY	GRIMSBY	523292.18	409397.96	1963		48434	Urbis	Axia 16 LED 350mA	19 Watts	5.00 Metres	Steel	
Y	9	STREET LIGHTING	FAULDING WAY	GRIMSBY	523253.52	409370.8	1963		48435	Urbis	Axia 16 LED 350mA	19 Watts	5.00 Metres	Steel	
Y	10	STREET LIGHTING	FAULDING WAY	GRIMSBY	523251.12	409397.59	1963		48436	Urbis	Axia 16 LED 350mA	19 Watts	5.00 Metres	Steel	
Y	11	STREET LIGHTING	FAULDING WAY	GRIMSBY	523342.81	409361.59	1963		48437	Urbis	Axia 16 LED 350mA	19 Watts	5.00 Metres	Steel	
Y	12	STREET LIGHTING	FAULDING WAY	GRIMSBY	523368.04	409337.57	1963		48438	Urbis	Axia 16 LED 350mA	19 Watts	5.00 Metres	Steel	
Y	13	STREET LIGHTING	FAULDING WAY	GRIMSBY	523385.16	409312.71	1963		48439	Urbis	Axia 16 LED 350mA	19 Watts	5.00 Metres	Steel	
Y	14	STREET LIGHTING	FAULDING WAY	GRIMSBY	523369.69	409289.33	1963		48440	Urbis	Axia 16 LED 350mA	19 Watts	5.00 Metres	Steel	
Y	15	STREET LIGHTING	FAULDING WAY	GRIMSBY	523332.13	409265.67	1963		48441	Urbis	Axia 16 LED 350mA	19 Watts	5.00 Metres	Steel	
Y	1	STREET LIGHTING	FENBY CLOSE	GRIMSBY	523585.13	408947.4	2019	23/07/2019	67492	Urbis	AXIA 16 LED 390mA	21 Watts	6.00 Metres	Galvanised Steel	
Y	2	STREET LIGHTING	FENBY CLOSE	GRIMSBY	523614.46	408957.63	2014		48449	Urbis	AXIA 16 LED 390mA	21 Watts	6.00 Metres	Galvanised Steel	
Y	1	STREET LIGHTING	FERNHILL	GRIMSBY	523518.75	409061.45	2008		48487	Urbis	AXIA 16 LED 390mA	21 Watts	6.00 Metres	Steel	
Y	2	STREET LIGHTING	FERNHILL	GRIMSBY	523487.25	409041.63	2019	23/07/2019	67493	Urbis	AXIA 16 LED 390mA	21 Watts	6.00 Metres	Galvanised Steel	
Y	1	STREET LIGHTING	FOXHILL	GRIMSBY	523555.69	409031.26	1998		48912	Urbis	AXIA 16 LED 390mA	21 Watts	6.00 Metres	Galvanised Steel	
Y	2	STREET LIGHTING	FOXHILL	GRIMSBY	523546.67	409057.13	1998		48913	Urbis	AXIA 16 LED 390mA	21 Watts	6.00 Metres	Galvanised Steel	
Y	3	STREET LIGHTING	FOXHILL	GRIMSBY	523531.66	409076.23	2019	23/07/2019	67484	Urbis	AXIA 16 LED 390mA	21 Watts	6.00 Metres	Galvanised Steel	
Y	4	STREET LIGHTING	FOXHILL	GRIMSBY	523505.05	409096.98	2019	23/07/2019	67573	Urbis	AXIA 16 LED 390mA	21 Watts	6.00 Metres	Galvanised Steel	
Y	5	STREET LIGHTING	FOXHILL	GRIMSBY	523483.15	409126.63	1998		48916	Urbis	AXIA 16 LED 390mA	21 Watts	6.00 Metres	Galvanised Steel	
Y	6	STREET LIGHTING	FOXHILL	GRIMSBY	523465.19	409106.75	1997		48917	Urbis	AXIA 16 LED 390mA	21 Watts	6.00 Metres	Galvanised Steel	

Y	7	STREET LIGHTING	FOXHILL	GRIMSBY	523423.47	409084.96	2019	23/07/2019	67574	Urbis	AXIA 16 LED 390mA	21 Watts	6.00 Metres	Galvanised Steel	
Y	8	STREET LIGHTING	FOXHILL	GRIMSBY	523423.68	409108.59	1968		48919	Urbis	AXIA 16 LED 390mA	21 Watts	5.00 Metres	Steel	
Y	9	STREET LIGHTING	FOXHILL	GRIMSBY	523411.2	409127.13	1968		48920	Urbis	AXIA 16 LED 390mA	21 Watts	5.00 Metres	Steel	
Y	1	STREET LIGHTING	GEDNEY CLOSE	GRIMSBY	523520.88	409490.56	1968		49140	Urbis	Axia 16 LED 350mA	19 Watts	5.00 Metres	Steel	
Y	2	STREET LIGHTING	GEDNEY CLOSE	GRIMSBY	523517.08	409512.4	1968		49141	Urbis	Axia 16 LED 350mA	19 Watts	5.00 Metres	Steel	
Y	3	STREET LIGHTING	GEDNEY CLOSE	GRIMSBY	523490.62	409543.98	1968		49142	Urbis	Axia 16 LED 350mA	19 Watts	5.00 Metres	Steel	
Y	4	STREET LIGHTING	GEDNEY CLOSE	GRIMSBY	523476.45	409527.15	1968		49143	Urbis	Axia 16 LED 350mA	19 Watts	5.00 Metres	Steel	
Y	5	STREET LIGHTING	GEDNEY CLOSE	GRIMSBY	523452.02	409516.26	1968		49144	Urbis	Axia 16 LED 350mA	19 Watts	5.00 Metres	Steel	
Y	6	STREET LIGHTING	GEDNEY CLOSE	GRIMSBY	523462.53	409563.03	1968		49145	Urbis	Axia 16 LED 350mA	19 Watts	5.00 Metres	Steel	
Y	1	STREET LIGHTING	GLOUCESTER AVENUE	GRIMSBY	526116.56	407993.13	2006		49326	1 Urbis LED	Axia 16 LED 500mA	28 Watts	6.00 Metres	Stainless Steel	
Y	2	STREET LIGHTING	GLOUCESTER AVENUE	GRIMSBY	526078.78	407995.46	2006		49327	1 Urbis LED	Axia 16 LED 500mA	28 Watts	6.00 Metres	Stainless Steel	
Y	3	STREET LIGHTING	GLOUCESTER AVENUE	GRIMSBY	526040.76	407998.16	2006		49328	1 Urbis LED	Axia 16 LED 500mA	28 Watts	6.00 Metres	Stainless Steel	
Y	4	STREET LIGHTING	GLOUCESTER AVENUE	GRIMSBY	526000.15	407989.58	2006		49329	1 Urbis LED	Axia 16 LED 500mA	28 Watts	6.00 Metres	Stainless Steel	
Y	5	STREET LIGHTING	GLOUCESTER AVENUE	GRIMSBY	525963.84	407994.48	2006		49330	1 Urbis LED	Axia 16 LED 500mA	28 Watts	6.00 Metres	Stainless Steel	
Y	6	STREET LIGHTING	GLOUCESTER AVENUE	GRIMSBY	525929.62	407983.81	2006		49331	1 Urbis LED	Axia 16 LED 500mA	28 Watts	6.00 Metres	Stainless Steel	
Y	7	STREET LIGHTING	GLOUCESTER AVENUE	GRIMSBY	525902.15	407962.22	2006		49332	1 Urbis LED	Axia 16 LED 500mA	28 Watts	6.00 Metres	Stainless Steel	
Y	8	STREET LIGHTING	GLOUCESTER AVENUE	GRIMSBY	525868.65	407963.33	2006		49333	1 Urbis LED	Axia 16 LED 500mA	28 Watts	6.00 Metres	Stainless Steel	
Y	9	STREET LIGHTING	GLOUCESTER AVENUE	GRIMSBY	525831	407939.65	2006		49334	1 Urbis LED	Axia 16 LED 500mA	28 Watts	6.00 Metres	Stainless Steel	
Y	10	STREET LIGHTING	GLOUCESTER AVENUE	GRIMSBY	525794.45	407939.53	2006		49335	1 Urbis LED	Axia 16 LED 500mA	28 Watts	6.00 Metres	Stainless Steel	
Y	11	STREET LIGHTING	GLOUCESTER AVENUE	GRIMSBY	525756.18	407927.14	2006		49336	1 Urbis LED	Axia 16 LED 500mA	28 Watts	6.00 Metres	Stainless Steel	
Y	12	STREET LIGHTING	GLOUCESTER AVENUE	GRIMSBY	525722.33	407904.08	2006		49337	1 Urbis LED	Axia 16 LED 500mA	28 Watts	6.00 Metres	Stainless Steel	
Y	13	STREET LIGHTING	GLOUCESTER AVENUE	GRIMSBY	525679.15	407901.87	2006		49338	1 Urbis LED	Axia 16 LED 500mA	28 Watts	6.00 Metres	Stainless Steel	
Y	14	STREET LIGHTING	GLOUCESTER AVENUE	GRIMSBY	525642.96	407877.96	2006		49339	1 Urbis LED	Axia 16 LED 500mA	28 Watts	6.00 Metres	Stainless Steel	
Y	15	STREET LIGHTING	GLOUCESTER AVENUE	GRIMSBY	525602.36	407876.36	2006		49340	1 Urbis LED	Axia 16 LED 500mA	28 Watts	6.00 Metres	Stainless Steel	
Y	1	STREET LIGHTING	GREYFRIARS	GRIMSBY	523574.63	409147.89	2019	01/08/2019	67491	Urbis	AXIA 16 LED 390mA	21 Watts	6.00 Metres	Galvanised Steel	
Y	2	STREET LIGHTING	GREYFRIARS	GRIMSBY	523596.67	409176.53	2019	01/08/2019	67677	Urbis	AXIA 16 LED 390mA	21 Watts	6.00 Metres	Galvanised Steel	
Y	3	STREET LIGHTING	GREYFRIARS	GRIMSBY	523626.65	409189.49	2008		49755	Urbis	AXIA 16 LED 390mA	21 Watts	6.00 Metres	Steel	
Y	4	STREET LIGHTING	GREYFRIARS	GRIMSBY	523650.35	409219.88	2019	01/08/2019	67678	Urbis	AXIA 16 LED 390mA	21 Watts	6.00 Metres	Galvanised Steel	
Y	5	STREET LIGHTING	GREYFRIARS	GRIMSBY	523672.43	409235.06	1968		49757	Urbis	AXIA 16 LED 390mA	21 Watts	5.00 Metres	Steel	
Y	6	STREET LIGHTING	GREYFRIARS	GRIMSBY	523695.77	409240.27	2019	01/08/2019	67497	Urbis	AXIA 16 LED 390mA	21 Watts	6.00 Metres	Galvanised Steel	
Y	7	STREET LIGHTING	GREYFRIARS	GRIMSBY	523726.44	409230.84	1968		49759	Urbis	AXIA 16 LED 390mA	21 Watts	5.00 Metres	Steel	
Y	8	STREET LIGHTING	GREYFRIARS	GRIMSBY	523751.94	409214.46	1968		49760	Urbis	AXIA 16 LED 390mA	21 Watts	5.00 Metres	Steel	
Y	9	STREET LIGHTING	GREYFRIARS	GRIMSBY	523769.87	409191.42	1968		49761	Urbis	AXIA 16 LED 390mA	21 Watts	5.00 Metres	Steel	
Y	10	STREET LIGHTING	GREYFRIARS	GRIMSBY	523777.27	409162.89	1968		49762	Urbis	AXIA 16 LED 390mA	21 Watts	5.00 Metres	Steel	
Y	11	STREET LIGHTING	GREYFRIARS	GRIMSBY	523773.84	409134.29	1968		49763	Urbis	AXIA 16 LED 390mA	21 Watts	5.00 Metres	Steel	
Y	12	STREET LIGHTING	GREYFRIARS	GRIMSBY	523764.78	409104.6	1968		49764	Urbis	AXIA 16 LED 390mA	21 Watts	5.00 Metres	Steel	
Y	13	STREET LIGHTING	GREYFRIARS	GRIMSBY	523754.29	409073.69	2019	01/08/2019	67679	Urbis	AXIA 16 LED 390mA	21 Watts	6.00 Metres	Galvanised Steel	
Y	14	STREET LIGHTING	GREYFRIARS	GRIMSBY	523736.6	409055.33	2019	01/08/2019	67680	Urbis	AXIA 16 LED 390mA	21 Watts	6.00 Metres	Galvanised Steel	
Y	15	STREET LIGHTING	GREYFRIARS	GRIMSBY	523733.93	409027.25	2019	01/08/2019	67681	Urbis	AXIA 16 LED 390mA	21 Watts	6.00 Metres	Galvanised Steel	
Y	16	STREET LIGHTING	GREYFRIARS	GRIMSBY	523714.02	409005.1	2019	01/08/2019	67682	Urbis	AXIA 16 LED 390mA	21 Watts	6.00 Metres	Galvanised Steel	
Y	17	STREET LIGHTING	GREYFRIARS	GRIMSBY	523709.9	408972.43	2020	01/12/2020	68196	Urbis	AXIA 16 LED 390mA	21 Watts	6.00 Metres	Galvanised Steel	
Y	1	STREET LIGHTING	HAMILTON CLOSE	GRIMSBY	523879.61	407785.88	2019	03/10/2019	67619	Urbis	Axia 16 LED 350mA	19 Watts	6.00 Metres	Galvanised Steel	
Y	2	STREET LIGHTING	HAMILTON CLOSE	GRIMSBY	523856.19	407790.47	2019	03/10/2019	67807	Urbis	Axia 16 LED 350mA	19 Watts	6.00 Metres	Galvanised Steel	
Y	3	STREET LIGHTING	HAMILTON CLOSE	GRIMSBY	523830.16	407783.12	2003		50096	Urbis	Axia 16 LED 350mA	19 Watts	6.00 Metres	Stainless Steel	
Y	4	STREET LIGHTING	HAMILTON CLOSE	GRIMSBY	523833.25	407816.26	2019	03/10/2019	67808	Urbis	Axia 16 LED 350mA	19 Watts	6.00 Metres	Galvanised Steel	
Y	1	STREET LIGHTING	MAYFAIR DRIVE EAST	GRIMSBY	523666.74	409297.07	2003		53441	Urbis	AXIA 16 LED 390mA	21 Watts	5.00 Metres	Stainless Steel	
Y	2	STREET LIGHTING	MAYFAIR DRIVE EAST	GRIMSBY	523686.24	409297.98	2019	23/07/2019	67486	Urbis	AXIA 16 LED 390mA	21 Watts	6.00 Metres	Galvanised Steel	
Y	3	STREET LIGHTING	MAYFAIR DRIVE EAST	GRIMSBY	523704.77	409302.28	2019	23/07/2019	67683	Urbis	AXIA 16 LED 390mA	21 Watts	6.00 Metres	Galvanised Steel	
Y	4	STREET LIGHTING	MAYFAIR DRIVE EAST	GRIMSBY	523733.71	409289.73	2019	23/07/2019	67684	Urbis	AXIA 16 LED 390mA	21 Watts	6.00 Metres	Galvanised Steel	
Y	5	STREET LIGHTING	MAYFAIR DRIVE EAST	GRIMSBY	523760.52	409273.25	2019	23/07/2019	67685	Urbis	AXIA 16 LED 390mA	21 Watts	6.00 Metres	Galvanised Steel	
Y	6	STREET LIGHTING	MAYFAIR DRIVE EAST	GRIMSBY	523784.72	409258.23	2015		53446	Urbis	AXIA 16 LED 390mA	21 Watts	6.00 Metres	Galvanised Steel	
Y	7	STREET LIGHTING	MAYFAIR DRIVE EAST	GRIMSBY	523809.72	409247.75	2019	23/07/2019	67686	Urbis	AXIA 16 LED 390mA	21 Watts	6.00 Metres	Galvanised Steel	
Y	1	STREET LIGHTING	NELSON WAY	GRIMSBY	523742.37	408140.49	2013		53942	1 Urbis LED	Teceo 32 LED 500mA	52 Watts	8.00 Metres	Steel	
Y	2	STREET LIGHTING	NELSON WAY	GRIMSBY	523733.37	408161.2	2020	15/12/2020	68213	Urbis	Teceo 32 LED 500mA	52 Watts	8.00 Metres	Galvanised Steel	
Y	3	STREET LIGHTING	NELSON WAY	GRIMSBY	523704.66	408159.07	1990		53944	1 Urbis LED	Teceo 32 LED 500mA	52 Watts	8.00 Metres	Steel	
Y	4	STREET LIGHTING	NELSON WAY	GRIMSBY	523690.67	408174.35	1990		53945	1 Urbis LED	Teceo 32 LED 500mA	52 Watts	8.00 Metres	Steel	
Y	5	STREET LIGHTING	NELSON WAY	GRIMSBY	523670.23	408172.97	1990		53946	1 Urbis LED	Teceo 32 LED 500mA	52 Watts	8.00 Metres	Steel	
Y	6	STREET LIGHTING	NELSON WAY	GRIMSBY	523641.14	408194.78	1990		53947	1 Urbis LED	Teceo 32 LED 500mA	52 Watts	8.00 Metres	Steel	
Y	7	STREET LIGHTING	NELSON WAY	GRIMSBY	523621.07	408191.93	1990		53948	1 Urbis LED	Teceo 32 LED 500mA	52 Watts	8.00 Metres	Steel	
Y	8	STREET LIGHTING	NELSON WAY	GRIMSBY	523605.97	408202.06	1990		53949	1 Urbis LED	Teceo 32 LED 500mA	52 Watts	8.00 Metres	Galvanised Steel	
Y	9	STREET LIGHTING	NELSON WAY	GRIMSBY	523574.67	408195.98	1990		53950	1 Urbis LED	Teceo 32 LED 500mA	52 Watts	8.00 Metres	Galvanised Steel	
Y	10	STREET LIGHTING	NELSON WAY	GRIMSBY	523549.26	408180.24	2007		53951	1 Urbis LED	Teceo 32 LED 500mA	52 Watts	8.00 Metres	Steel	
Y	11	STREET LIGHTING	NELSON WAY	GRIMSBY	523526.93	408163.44	2007		53952	1 Urbis LED	Teceo 32 LED 500mA	52 Watts	8.00 Metres	Steel	
Y	12	STREET LIGHTING	NELSON WAY	GRIMSBY	523508.66	408146.34	1990		53953	1 Urbis LED	Teceo 32 LED 500mA	52 Watts	8.00 Metres	Galvanised Steel	
Y	13	STREET LIGHTING	NELSON WAY	GRIMSBY	523490.62	408114.4	1990		53954	1 Urbis LED	Teceo 32 LED 500mA	52 Watts	8.00 Metres	Galvanised Steel	
Y	14	STREET LIGHTING	NELSON WAY	GRIMSBY	523487.49	408080.98	1990		53955	1 Urbis LED	Teceo 32 LED 500mA	52 Watts	8.00 Metres	Galvanised Steel	
Y	15	STREET LIGHTING	NELSON WAY	GRIMSBY	523482.89	408049.87	1990		53956	1 Urbis LED	Teceo 40 LED 500mA	64 Watts	8.00 Metres	Galvanised Steel	
Y	16	STREET LIGHTING	NELSON WAY	GRIMSBY	523473.31	408019.58	1990		53957	1 Urbis LED	Teceo 32 LED 500mA	52 Watts	8.00 Metres	Galvanised Steel	
Y	17	STREET LIGHTING	NELSON WAY	GRIMSBY	523459.32	407986.98	1990		53958	1 Urbis LED	Teceo 32 LED 500mA	52 Watts	8.00 Metres	Galvanised Steel	
Y	18	STREET LIGHTING	NELSON WAY	GRIMSBY	523457.3	407967.37	1990		53959	1 Urbis LED	Teceo 32 LED 500mA	52 Watts	8.00 Metres	Galvanised Steel	
Y	19	STREET LIGHTING	NELSON WAY	GRIMSBY	523422.13	407944.08	1990		53960	1 Urbis LED	Teceo 32 LED 500mA	52 Watts	8.00 Metres	Galvanised Steel	
Y	20	STREET LIGHTING	NELSON WAY	GRIMSBY	523417.71	407923.37	1990		53961	1 Urbis LED	Teceo 32 LED 500mA	52 Watts	8.00 Metres	Galvanised Steel	
Y	21	STREET LIGHTING	NELSON WAY	GRIMSBY	523403.16	407916.93	1990		53962	1 Urbis LED	Teceo 32 LED 500mA	52 Watts	8.00 Metres	Galvanised Steel	
Y	22	STREET LIGHTING	NELSON WAY	GRIMSBY	523394.14	407888.48	1990		53963	1 Urbis LED	Teceo 32 LED 500mA	52 Watts	8.00 Metres	Galvanised Steel	
Y	23	STREET LIGHTING	NELSON WAY	GRIMSBY	523396.17	407854.05	1990		53964	1 Urbis LED	Teceo 32 LED 500mA	52 Watts	8.00 Metres	Galvanised Steel	
Y	24	STREET LIGHTING	NELSON WAY	GRIMSBY	523410.16	407821.19	1990		53965	1 Urbis LED	Teceo 32 LED 500mA	52 Watts	8.00 Metres	Galvanised Steel	
Y	25	STREET LIGHTING	NELSON WAY	GRIMSBY	523425.81	407790.63	1990		53966	1 Urbis LED	Teceo 32 LED 500mA	52 Watts	8.00 Metres	Galvanised Steel	
Y	26	STREET LIGHTING	NELSON WAY	GRIMSBY	523444.77	407775.34	1990		53967	1 Urbis LED	Teceo 32 LED 500mA	52 Watts	8.00 Metres	Galvanised Steel	
Y	27	STREET LIGHTING	NELSON WAY	GRIMSBY	523447.72	407747.73	1990		53968	1 Urbis LED	Teceo 32 LED 500mA	52 Watts	8.00 Metres	Galvanised Steel	
Y	28	STREET LIGHTING	NELSON WAY	GRIMSBY	523458.95	407727.66	2008		53969	1 Urbis LED	Teceo 32 LED 500mA	52 Watts	8.00 Metres	Steel	
Y	29	STREET LIGHTING	NELSON WAY	GRIMSBY	523479.57	407709.89	1990		53970	1 Urbis LED	Teceo 32 LED 500mA	52 Watts	8.00 Metres	Galvanised Steel	
Y	30	STREET LIGHTING	NELSON WAY	GRIMSBY	523499.09	407711	1990		53971	1 Urbis LED	Teceo 32 LED 500mA	52 Watts	8.00 Metres	Galvanised Steel	
Y	31	STREET LIGHTING	NELSON WAY	GRIMSBY	523506.64	407697.93	1990		53972	1 Urbis LED	Teceo 32 LED 500mA	52 Watts	8.00 Metres	Galvanised Steel	
Y	32	STREET LIGHTING	NELSON WAY	GRIMSBY	523532.6	407706.49	1990		53973	1 Urbis LED	Teceo 32 LED 500mA	52 Watts	8.00 Metres	Galvanised Steel	
Y	33	STREET LIGHTING	NELSON WAY	GRIMSBY	523551.56	407697.1	1990		53974	1 Urbis LED	Teceo 32 LED 500mA	52 Watts	8.00 Metres	Galvanised Steel	
Y	34	STREET LIGHTING	NELSON WAY	GRIMSBY	523562.31	407707.19	1990		53975	1 Urbis LED	Teceo 32 LED 500mA	52 Watts	8.00 Metres	Galvanised Steel	
Y	35	STREET LIGHTING	NELSON WAY	GRIMSBY	523585.6	407698.27	1990		53976	1 Urbis LED	Teceo 32 LED 500mA	52 Watts	8.00 Metres	Galvanised Steel	
Y	36	STREET LIGHTING	NELSON WAY	GRIMSBY	523604.2	407709.09	1990		53977	1 Urbis LED	Teceo 32 LED 500mA	52 Watts	8.00 Metres	Galvanised Steel	
Y	37	STREET LIGHTING	NELSON WAY	GRIMSBY	523611.42	407699.47	1990		53978	1 Urbis LED	Teceo 32 LED 500mA	52 Watts	8.00 Metres	Galvanised Steel	
Y	38	STREET LIGHTING	NELSON WAY	GRIMSBY	523640.03	407700.67	1990		53979	1 Urbis LED	Teceo 32 LED 500mA	52 Watts	8.00 Metres	Galvanised Steel	
Y	39	STREET LIGHTING	NELSON WAY	GRIMSBY	523683.06	407681.37	1990		53980	1 Urbis LED	Teceo 32 LED 500mA	52 Watts	8.00 Metres	Galvanised Steel	
Y	40	STREET LIGHTING	NELSON WAY	GRIMSBY	523709.9	407673.21	1990		53981	1 Urbis LED	Teceo 32 LED 500mA	52 Watts	8.00 Metres	Galvanised Steel	
Y	41	STREET LIGHTING	NELSON WAY	GRIMSBY	523737.11	407650.68	1990		53982	1 Urbis LED	Teceo 32 LED 500mA	52 Watts	8.00 Metres	Galvanised Steel	
Y	42	STREET LIGHTING	NELSON WAY	GRIMSBY	523750.02	407665.55	1990		53983	1 Urbis LED	Teceo 32 LED 500mA	52 Watts	8.00 Metres	Galvanised Steel	
Y	43	STREET LIGHTING	NELSON WAY	GRIMSBY	523782.68	407658.65	1990		53984	1 Urbis LED	Teceo 32 LED 500mA	52 Watts	8.00 Metres	Steel	
Y	44	STREET LIGHTING	NELSON WAY	GRIMSBY	523544.75	407713.49	1990		53985	Urbis	Axia 16 LED 350mA	19 Watts	5.00 Metres	Galvanised Steel	
Y	45	STREET LIGHTING	NELSON WAY	GRIMSBY	523544.56	407731.35	1990		53986	Urbis	Axia 16 LED 350mA	19 Watts	5.00 Metres	Galvanised Steel	
Y	46	STREET LIGHTING	NELSON WAY	GRIMSBY	523563.34	407750.59	1990		53987	Urbis	Axia 16 LED 350mA	19 Watts	5.00 Metres	Galvanised Steel	
Y	47	STREET LIGHTING	NELSON WAY	GRIMSBY	523571.63	407764.67	1990		53988	Urbis	Axia 16 LED 350mA	19 Watts	5.00 Metres	Galvanised Steel	
Y	48	STREET LIGHTING	NELSON WAY	GRIMSBY	523596.85	407759.89	1990		53989	Urbis	Axia 16 LED 350mA	19 Watts	5.00 Metres	Galvanised Steel	
Y	49	STREET LIGHTING	NELSON WAY	GRIMSBY	523583.96	407791.46	1990		53990	Urbis	Axia 16 LED 350mA	19 Watts	5.00 Metres	Galvanised Steel	
Y	50	STREET LIGHTING	NELSON WAY	GRIMSBY	523597.22	407806.56	1990		53991	Urbis	Axia 16 LED 350mA	19 Watts	5.00 Metres	Galvanised Steel	
Y	51	STREET LIGHTING	NELSON WAY	GRIMSBY	523611.01	407807.47	1990		62637	Urbis	Axia 16 LED 350mA	19 Watts	5.00 Metres	Galvanised Steel	
Y	1	STREET LIGHTING	FOOTPATH ADJACENT TO 104	GRIMSBY	523372.23	407870.71	1998		48675	Urbis	Axia 8 LED 350mA	10 Watts	5.00 Metres	Galvanised Steel	
Y	1	STREET LIGHTING	OAKWOOD DRIVE	GRIMSBY			2024	25/09/2024	69986	Urbis	Axia 24 LED 500mA	28 Watts	6.00 Metres	Galvanised Steel	
Y	2	STREET LIGHTING	OAKWOOD DRIVE	GRIMSBY	523214.64	409161.69	1993		54327	Urbis	Axia 16 LED 350mA	19 Watts	5.00 Metres	Steel	
Y	3	STREET LIGHTING	OAKWOOD DRIVE	GRIMSBY			2024	25/09/2024	70252	Urbis	Axia 24 LED 500mA	28 Watts	6.00 Metres	Galvanised Steel	
Y	4	STREET LIGHTING	OAKWOOD DRIVE	GRIMSBY	523159.04	409101.85	1993		54329	Urbis	Axia 16 LED 350mA	19 Watts	5.00 Metres	Steel	
Y	5	STREET LIGHTING	OAKWOOD DRIVE	GRIMSBY	523127.19	409078.38	1993		54330	Urbis	Axia 16 LED 350mA	19 Watts	5.00 Metres	Steel	
Y	6	STREET LIGHTING	OAKWOOD DRIVE	GRIMSBY			2024	25/09/2024	70253	Urbis	Axia 24 LED 500mA	28 Watts	6.00 Metres	Galvanised Steel	

Y	7	STREET LIGHTING	OAKWOOD DRIVE	GRIMSBY	523076.37	409019.09	1993		54332	Urbis	Axia 16 LED 350mA	19 Watts	5.00 Metres	Steel	
Y	8	STREET LIGHTING	OAKWOOD DRIVE	GRIMSBY	523066.2	408993.68	2019	04/10/2019	67523	Urbis	Axia 16 LED 350mA	19 Watts	6.00 Metres	Galvanised Steel	
Y	9	STREET LIGHTING	OAKWOOD DRIVE	GRIMSBY	523083	408969.01	1993		54334	Urbis	Axia 8 LED 350mA	10 Watts	5.00 Metres	Steel	
Y	10	STREET LIGHTING	OAKWOOD DRIVE	GRIMSBY	523113.19	408947.2	1993		54335	Urbis	Axia 16 LED 350mA	19 Watts	5.00 Metres	Steel	
Y	1	STREET LIGHTING	OLD FLEET	GRIMSBY	523409.63	408913.69	1973		54380	Urbis	Axia 16 LED 350mA	19 Watts	6.00 Metres	Galvanised Steel	
Y	2	STREET LIGHTING	OLD FLEET	GRIMSBY	523392.93	408943.24	1973		54381	Urbis	Axia 16 LED 350mA	19 Watts	6.00 Metres	Galvanised Steel	
Y	3	STREET LIGHTING	OLD FLEET	GRIMSBY	523364.95	408963.69	1973		54382	Urbis	Axia 16 LED 350mA	19 Watts	6.00 Metres	Galvanised Steel	
Y	4	STREET LIGHTING	OLD FLEET	GRIMSBY	523343.94	408996.85	2015	30/07/2015	54383	Urbis	Axia 16 LED 350mA	19 Watts	6.00 Metres	Galvanised Steel	
Y	1	STREET LIGHTING	PRIORY ROAD	GRIMSBY	523611.43	409045.98	2019	23/07/2019	67489	Urbis	AXIA 16 LED 390mA	21 Watts	6.00 Metres	Galvanised Steel	
Y	2	STREET LIGHTING	PRIORY ROAD	GRIMSBY	523580.15	409031.06	1976		55681	Urbis	Axia 16 LED 350mA	19 Watts	6.00 Metres	Galvanised Steel	
Y	3	STREET LIGHTING	PRIORY ROAD	GRIMSBY	523559.83	409005.49	1976		55682	Urbis	Axia 16 LED 350mA	19 Watts	6.00 Metres	Galvanised Steel	
Y	4	STREET LIGHTING	PRIORY ROAD	GRIMSBY	523534.85	408994.97	1968		55683	Urbis	Axia 16 LED 350mA	19 Watts	5.00 Metres	Steel	
Y	5	STREET LIGHTING	PRIORY ROAD	GRIMSBY	523540.88	408973.54	1976		55684	Urbis	Axia 16 LED 350mA	19 Watts	6.00 Metres	Galvanised Steel	
Y	6	STREET LIGHTING	PRIORY ROAD	GRIMSBY	523568	408953.03	2019	23/07/2019	67689	Urbis	AXIA 16 LED 390mA	21 Watts	6.00 Metres	Galvanised Steel	
Y	7	STREET LIGHTING	PRIORY ROAD	GRIMSBY	523572.82	408932.42	2019	23/07/2019	67690	Urbis	AXIA 16 LED 390mA	21 Watts	6.00 Metres	Galvanised Steel	
Y	8	STREET LIGHTING	PRIORY ROAD	GRIMSBY	523591.5	408922.84	2019	23/07/2019	67691	Urbis	AXIA 16 LED 390mA	21 Watts	6.00 Metres	Galvanised Steel	
Y	9	STREET LIGHTING	PRIORY ROAD	GRIMSBY	523597.64	408900.61	1976		55688	Urbis	Axia 16 LED 350mA	19 Watts	6.00 Metres	Galvanised Steel	
Y	10	STREET LIGHTING	PRIORY ROAD	GRIMSBY	523587.94	408874.32	2019	23/07/2019	67692	Urbis	AXIA 16 LED 390mA	21 Watts	6.00 Metres	Galvanised Steel	
Y	11	STREET LIGHTING	PRIORY ROAD	GRIMSBY	523566.71	408856.98	1976		55690	Urbis	Axia 16 LED 350mA	19 Watts	5.00 Metres	Steel	
Y	12	STREET LIGHTING	PRIORY ROAD	GRIMSBY	523559.14	408826.68	2019	23/07/2019	67693	Urbis	AXIA 16 LED 390mA	21 Watts	6.00 Metres	Galvanised Steel	
Y	13	STREET LIGHTING	PRIORY ROAD	GRIMSBY	523536.69	408807.68	2019	23/07/2019	67694	Urbis	AXIA 16 LED 390mA	21 Watts	6.00 Metres	Galvanised Steel	
Y	1	STREET LIGHTING	ST NICHOLAS DRIVE	GRIMSBY	523534.85	409177.01	1946		57857	1 Urbis LED	Teceo 24 LED 500mA	40 Watts	8.00 Metres	Steel	
Y	2	STREET LIGHTING	ST NICHOLAS DRIVE	GRIMSBY	523552.89	409154.55	1946		57858	1 Urbis LED	Teceo 24 LED 500mA	40 Watts	8.00 Metres	Steel	
Y	3	STREET LIGHTING	ST NICHOLAS DRIVE	GRIMSBY	523554.16	409136.14	1946		57859	1 Urbis LED	Teceo 24 LED 500mA	40 Watts	8.00 Metres	Steel	
Y	4	STREET LIGHTING	ST NICHOLAS DRIVE	GRIMSBY	523572.38	409129.88	2012	27/03/2012	57860	1 Urbis LED	Teceo 24 LED 500mA	40 Watts	8.00 Metres	Steel	
Y	5	STREET LIGHTING	ST NICHOLAS DRIVE	GRIMSBY	523583.43	409098.68	1946		57861	1 Urbis LED	Teceo 24 LED 500mA	40 Watts	8.00 Metres	Steel	
Y	6	STREET LIGHTING	ST NICHOLAS DRIVE	GRIMSBY	523605.34	409071.7	1946		57862	1 Urbis LED	Teceo 24 LED 500mA	40 Watts	8.00 Metres	Steel	
Y	7	STREET LIGHTING	ST NICHOLAS DRIVE	GRIMSBY	523624.86	409063.79	1946		57863	1 Urbis LED	Teceo 24 LED 500mA	40 Watts	8.00 Metres	Steel	
Y	8	STREET LIGHTING	ST NICHOLAS DRIVE	GRIMSBY	523629.64	409040.5	1946		57864	1 Urbis LED	Teceo 24 LED 500mA	40 Watts	8.00 Metres	Steel	
Y	9	STREET LIGHTING	ST NICHOLAS DRIVE	GRIMSBY	523659.29	409020.7	1946		57865	1 Urbis LED	Teceo 24 LED 500mA	40 Watts	8.00 Metres	Steel	
Y	10	STREET LIGHTING	ST NICHOLAS DRIVE	GRIMSBY	523681.93	408992.26	1946		57866	1 Urbis LED	Teceo 24 LED 500mA	40 Watts	8.00 Metres	Steel	
Y	11	STREET LIGHTING	ST NICHOLAS DRIVE	GRIMSBY	523681.93	408973.39	1946		57867	1 Urbis LED	Teceo 24 LED 500mA	40 Watts	8.00 Metres	Steel	
Y	12	STREET LIGHTING	ST NICHOLAS DRIVE	GRIMSBY	523695.74	408959.49	1946		57868	1 Urbis LED	Teceo 24 LED 500mA	40 Watts	8.00 Metres	Steel	
Y	13	STREET LIGHTING	ST NICHOLAS DRIVE	GRIMSBY	523689.11	408927.45	1946		57869	1 Urbis LED	Teceo 24 LED 500mA	40 Watts	8.00 Metres	Steel	
Y	14	STREET LIGHTING	ST NICHOLAS DRIVE	GRIMSBY	523663.7	408897.16	1946		57870	1 Urbis LED	Teceo 24 LED 500mA	40 Watts	8.00 Metres	Steel	
Y	15	STREET LIGHTING	ST NICHOLAS DRIVE	GRIMSBY	523657.63	408859.79	1946		57871	1 Urbis LED	Teceo 24 LED 500mA	40 Watts	8.00 Metres	Steel	
Y	16	STREET LIGHTING	ST NICHOLAS DRIVE	GRIMSBY	523631.85	408829.5	1946		57872	1 Urbis LED	Teceo 24 LED 500mA	40 Watts	8.00 Metres	Steel	
Y	17	STREET LIGHTING	ST NICHOLAS DRIVE	GRIMSBY	523625.41	408794.06	1946		57873	1 Urbis LED	Teceo 24 LED 500mA	40 Watts	8.00 Metres	Steel	
Y	18	STREET LIGHTING	ST NICHOLAS DRIVE	GRIMSBY	523594.11	408763.22	1946		57874	1 Urbis LED	Teceo 24 LED 500mA	40 Watts	8.00 Metres	Steel	
Y	19	STREET LIGHTING	ST NICHOLAS DRIVE	GRIMSBY	523593.74	408742.97	1946		57875	1 Urbis LED	Teceo 24 LED 500mA	40 Watts	8.00 Metres	Steel	
Y	20	STREET LIGHTING	ST NICHOLAS DRIVE	GRIMSBY	523574.22	408732.29	1946		57876	1 Urbis LED	Teceo 24 LED 500mA	40 Watts	8.00 Metres	Steel	
Y	21	STREET LIGHTING	ST NICHOLAS DRIVE	GRIMSBY	523562.99	408696.85	1946		57877	1 Urbis LED	Teceo 24 LED 500mA	40 Watts	8.00 Metres	Steel	
Y	22	STREET LIGHTING	ST NICHOLAS DRIVE	GRIMSBY	523531.44	408674.43	1946		57878	1 Urbis LED	Teceo 24 LED 500mA	40 Watts	8.00 Metres	Steel	
Y	23	STREET LIGHTING	ST NICHOLAS DRIVE	GRIMSBY	523516.71	408647.27	1946		57879	1 Urbis LED	Teceo 24 LED 500mA	40 Watts	8.00 Metres	Steel	
Y	24	STREET LIGHTING	ST NICHOLAS DRIVE	GRIMSBY	523478.78	408635.86	1946		57880	1 Urbis LED	Teceo 24 LED 500mA	40 Watts	8.00 Metres	Steel	
Y	25	STREET LIGHTING	ST NICHOLAS DRIVE	GRIMSBY	523471.05	408619.19	1946		57881	1 Urbis LED	Teceo 24 LED 500mA	40 Watts	8.00 Metres	Steel	
Y	26	STREET LIGHTING	ST NICHOLAS DRIVE	GRIMSBY	523445.46	408617.44	1946		57882	1 Urbis LED	Teceo 24 LED 500mA	40 Watts	8.00 Metres	Steel	
Y	27	STREET LIGHTING	ST NICHOLAS DRIVE	GRIMSBY	523426.86	408595.26	1946		57883	1 Urbis LED	Teceo 24 LED 500mA	40 Watts	8.00 Metres	Steel	
Y	28	STREET LIGHTING	ST NICHOLAS DRIVE	GRIMSBY	523403.12	408598.52	2021	12/01/2021	68221	Urbis	Teceo 24 LED 500mA	40 Watts	8.00 Metres	Galvanised Steel	
Y	29	STREET LIGHTING	ST NICHOLAS DRIVE	GRIMSBY	523387.83	408624.81	1946		57885	1 Urbis LED	Teceo 24 LED 500mA	40 Watts	8.00 Metres	Steel	
Y	30	STREET LIGHTING	ST NICHOLAS DRIVE	GRIMSBY	523357.26	408643.5	1946		57886	Urbis	Teceo 24 LED 500mA	40 Watts	8.00 Metres	Steel	
Y	31	STREET LIGHTING	ST NICHOLAS DRIVE	GRIMSBY	523342.9	408676.18	1946		57887	1 Urbis LED	Teceo 24 LED 500mA	40 Watts	8.00 Metres	Steel	
Y	32	STREET LIGHTING	ST NICHOLAS DRIVE	GRIMSBY	523309.58	408698.37	1946		57888	1 Urbis LED	Teceo 24 LED 500mA	40 Watts	8.00 Metres	Steel	
Y	33	STREET LIGHTING	ST NICHOLAS DRIVE	GRIMSBY	523293.38	408733.62	1946		57889	1 Urbis LED	Teceo 24 LED 500mA	40 Watts	8.00 Metres	Steel	
Y	34	STREET LIGHTING	ST NICHOLAS DRIVE	GRIMSBY	523265.76	408750.84	1946		57890	1 Urbis LED	Teceo 24 LED 500mA	40 Watts	8.00 Metres	Steel	
Y	35	STREET LIGHTING	ST NICHOLAS DRIVE	GRIMSBY	523252.69	408784.81	1946		57891	1 Urbis LED	Teceo 24 LED 500mA	40 Watts	8.00 Metres	Steel	
Y	36	STREET LIGHTING	ST NICHOLAS DRIVE	GRIMSBY	523225.62	408801.84	1946		57892	1 Urbis LED	Teceo 24 LED 500mA	40 Watts	8.00 Metres	Steel	
Y	37	STREET LIGHTING	ST NICHOLAS DRIVE	GRIMSBY	523214.21	408833.97	1946		57893	1 Urbis LED	Teceo 24 LED 500mA	40 Watts	8.00 Metres	Steel	
Y	38	STREET LIGHTING	ST NICHOLAS DRIVE	GRIMSBY	523184.93	408854.13	1946		57894	1 Urbis LED	Teceo 24 LED 500mA	40 Watts	8.00 Metres	Steel	
Y	39	STREET LIGHTING	ST NICHOLAS DRIVE	GRIMSBY	523172.59	408886.63	1946		57895	1 Urbis LED	Teceo 24 LED 500mA	40 Watts	8.00 Metres	Steel	
Y	40	STREET LIGHTING	ST NICHOLAS DRIVE	GRIMSBY	523144.06	408906.24	1946		57896	1 Urbis LED	Teceo 24 LED 500mA	40 Watts	8.00 Metres	Steel	
Y	41	STREET LIGHTING	ST NICHOLAS DRIVE	GRIMSBY	523126.01	408934.68	1946		57897	1 Urbis LED	Teceo 24 LED 500mA	40 Watts	8.00 Metres	Steel	
Y	42	STREET LIGHTING	ST NICHOLAS DRIVE	GRIMSBY	523135.4	408952.36	2004		57898	1 Urbis LED	Teceo 24 LED 500mA	40 Watts	8.00 Metres	Stainless Steel	
Y	43	STREET LIGHTING	ST NICHOLAS DRIVE	GRIMSBY	523128.22	408970.5	1946		57899	1 Urbis LED	Teceo 24 LED 500mA	40 Watts	8.00 Metres	Steel	
Y	44	STREET LIGHTING	ST NICHOLAS DRIVE	GRIMSBY	523151.6	408985.22	1946		57900	1 Urbis LED	Teceo 24 LED 500mA	40 Watts	8.00 Metres	Steel	
Y	45	STREET LIGHTING	ST NICHOLAS DRIVE	GRIMSBY	523161.52	409013.46	2020	16/12/2020	68212	Urbis	Teceo 24 LED 500mA	40 Watts	8.00 Metres	Galvanised Steel	
Y	46	STREET LIGHTING	ST NICHOLAS DRIVE	GRIMSBY	523192.48	409031.99	1946		57902	1 Urbis LED	Teceo 24 LED 500mA	40 Watts	8.00 Metres	Steel	
Y	47	STREET LIGHTING	ST NICHOLAS DRIVE	GRIMSBY	523205.18	409058.6	1946		57903	1 Urbis LED	Teceo 24 LED 500mA	40 Watts	8.00 Metres	Steel	
Y	48	STREET LIGHTING	ST NICHOLAS DRIVE	GRIMSBY	523243.48	409078.39	1946		57904	1 Urbis LED	Teceo 24 LED 500mA	40 Watts	8.00 Metres	Steel	
Y	49	STREET LIGHTING	ST NICHOLAS DRIVE	GRIMSBY	523246.53	409096.28	2020	16/12/2020	68231	Urbis	Teceo 24 LED 500mA	40 Watts	8.00 Metres	Galvanised Steel	
Y	50	STREET LIGHTING	ST NICHOLAS DRIVE	GRIMSBY	523270.06	409104.27	2021	16/02/2021	68279	Urbis	Teceo 24 LED 500mA	40 Watts	8.00 Metres	Galvanised Steel	
Y	51	STREET LIGHTING	ST NICHOLAS DRIVE	GRIMSBY	523287.67	409134.36	1946		57907	1 Urbis LED	Teceo 24 LED 500mA	40 Watts	8.00 Metres	Steel	
Y	52	STREET LIGHTING	ST NICHOLAS DRIVE	GRIMSBY	523315.1	409145.27	2020	05/06/2020	67878	Urbis	Teceo 24 LED 500mA	40 Watts	8.00 Metres	Galvanised Steel	
Y	53	STREET LIGHTING	ST NICHOLAS DRIVE	GRIMSBY	523320.81	409165.02	1946		57909	1 Urbis LED	Teceo 24 LED 500mA	40 Watts	8.00 Metres	Steel	
Y	54	STREET LIGHTING	ST NICHOLAS DRIVE	GRIMSBY	523349.11	409177.74	2020	05/06/2020	68230	Urbis	Teceo 24 LED 500mA	40 Watts	8.00 Metres	Galvanised Steel	
Y	55	STREET LIGHTING	ST NICHOLAS DRIVE	GRIMSBY	523368.49	409193.93	1946		57911	1 Urbis LED	Teceo 24 LED 500mA	40 Watts	8.00 Metres	Steel	
Y	56	STREET LIGHTING	ST NICHOLAS DRIVE	GRIMSBY	523388.38	409226.79	1946		57912	1 Urbis LED	Teceo 24 LED 500mA	40 Watts	8.00 Metres	Steel	
Y	57	STREET LIGHTING	ST NICHOLAS DRIVE	GRIMSBY	523411.02	409247.14	1946		57913	1 Urbis LED	Teceo 24 LED 500mA	40 Watts	8.00 Metres	Steel	
Y	58	STREET LIGHTING	ST NICHOLAS DRIVE	GRIMSBY	523448.21	409259.01	1946		57914	1 Urbis LED	Teceo 24 LED 500mA	40 Watts	8.00 Metres	Steel	
Y	59	STREET LIGHTING	ST NICHOLAS DRIVE	GRIMSBY	523469.39	409253.12	1946		57915	1 Urbis LED	Teceo 24 LED 500mA	40 Watts	8.00 Metres	Steel	
Y	60	STREET LIGHTING	ST NICHOLAS DRIVE	GRIMSBY	523493.69	409230.2	1946		57916	Urbis	Teceo 32 LED 500mA	52 Watts	8.00 Metres	Steel	
Y	61	STREET LIGHTING	ST NICHOLAS DRIVE	GRIMSBY	523494.06	409210.78	1946		57917	1 Urbis LED	Teceo 24 LED 500mA	40 Watts	8.00 Metres	Steel	
Y	62	STREET LIGHTING	ST NICHOLAS DRIVE	GRIMSBY	523514.68	409186.01	1946		57918	1 Urbis LED	Teceo 24 LED 500mA	40 Watts	8.00 Metres	Steel	
Y	1	STREET LIGHTING	SANCTUARY WAY	GRIMSBY	523452.52	408637.74	1968		56524	Urbis	Axia 16 LED 350mA	19 Watts	5.00 Metres	Steel	
Y	2	STREET LIGHTING	SANCTUARY WAY	GRIMSBY	523416.07	408681.47	1968		56525	Urbis	Axia 16 LED 350mA	19 Watts	5.00 Metres	Steel	
Y	3	STREET LIGHTING	SANCTUARY WAY	GRIMSBY	523406	408707	2001		56526	Urbis	Axia 16 LED 350mA	19 Watts	6.00 Metres	Galvanised Steel	
Y	4	STREET LIGHTING	SANCTUARY WAY	GRIMSBY	523384.86	408732.73	1968		56527	Urbis	Axia 16 LED 350mA	19 Watts	5.00 Metres	Steel	
Y	5	STREET LIGHTING	SANCTUARY WAY	GRIMSBY	523367.01	408740.27	1968		56528	Urbis	Axia 16 LED 350mA	19 Watts	5.00 Metres	Steel	
Y	6	STREET LIGHTING	SANCTUARY WAY	GRIMSBY	523363.59	408758.24	1968		56529	Urbis	Axia 16 LED 350mA	19 Watts	5.00 Metres	Steel	
Y	7	STREET LIGHTING	SANCTUARY WAY	GRIMSBY	523340.94	408785.9	2007		56530	Urbis	Axia 16 LED 350mA	19 Watts	6.00 Metres	Steel	
Y	8	STREET LIGHTING	SANCTUARY WAY	GRIMSBY	523322.58	408793.49	1968		56531	Urbis	Axia 16 LED 350mA	19 Watts	5.00 Metres	Steel	
Y	9	STREET LIGHTING	SANCTUARY WAY	GRIMSBY	523317.52	408813.68	1968		56532	Urbis	Axia 16 LED 350mA	19 Watts	5.00 Metres	Steel	
Y	10	STREET LIGHTING	SANCTUARY WAY	GRIMSBY	523291.32	408831.09	1968		56533	Urbis	Axia 16 LED 350mA	19 Watts	5.00 Metres	Steel	
Y	11	STREET LIGHTING	SANCTUARY WAY	GRIMSBY	523274.1	408866.41	1968		56534	Urbis	Axia 16 LED 350mA	19 Watts	5.00 Metres	Steel	
Y	12	STREET LIGHTING	SANCTUARY WAY	GRIMSBY	523235.88	408897.92	1968		56535	Urbis	Axia 16 LED 350mA	19 Watts	5.00 Metres	Steel	
Y	13	STREET LIGHTING	SANCTUARY WAY	GRIMSBY	523215.75	408922.04	1968		56536	Urbis	Axia 16 LED 350mA	19 Watts	5.00 Metres	Steel	
Y	14	STREET LIGHTING	SANCTUARY WAY	GRIMSBY	523204.11	408951.98	1968		56537	Urbis	Axia 16 LED 350mA	19 Watts	5.00 Metres	Steel	
Y	15	STREET LIGHTING	SANCTUARY WAY	GRIMSBY	523224.61	408980.46	1968		56538	Urbis	Axia 16 LED 350mA	19 Watts	5.00 Metres	Steel	
Y	16	STREET LIGHTING	SANCTUARY WAY	GRIMSBY	523242.59	408984.7	1968		56539	Urbis	Axia 16 LED 350mA	19 Watts	5.00 Metres	Steel	
Y	17	STREET LIGHTING	SANCTUARY WAY	GRIMSBY	523248.41	409002.29	1968		56540	Urbis	Axia 16 LED 350mA	19 Watts	5.00 Metres	Steel	
Y	18	STREET LIGHTING	SANCTUARY WAY	GRIMSBY	523281.32	409033.37	1968		56541	Urbis	Axia 16 LED 350mA	19 Watts	5.00 Metres	Steel	
Y	19	STREET LIGHTING	SANCTUARY WAY	GRIMSBY	523282.21	409051.73	1968		56542	Urbis	Axia 16 LED 350mA	19 Watts	5.00 Metres	Steel	
Y	20	STREET LIGHTING	SANCTUARY WAY	GRIMSBY	523264.24	409085.08	1992		56543	Urbis	Axia 16 LED 350mA	19 Watts	5.00 Metres	Galvanised Steel	
Y	21	STREET LIGHTING	SANCTUARY WAY	GRIMSBY	523299.42	409038.25	1968		56544	Urbis	Axia 16 LED 350mA	19 Watts	5.00 Metres	Steel	
Y	22	STREET LIGHTING	SANCTUARY WAY	GRIMSBY	523305.46	409056.19	1968		56545	Urbis	Axia 16 LED 350mA	19 Watts	5.00 Metres	Steel	
Y	23	STREET LIGHTING	SANCTUARY WAY	GRIMSBY	523333.63	409081.5	1968		56546	Urbis	Axia 16 LED 350mA	19 Watts	5.00 Metres	Steel	
Y	24	STREET LIGHTING	SANCTUARY WAY	GRIMSBY	523369.9	409080.95	1968		56547	Urbis	Axia 16 LED 350mA	19 Watts	5.00 Metres	Steel	
Y	25	STREET LIGHTING	SANCTUARY WAY	GRIMSBY	523390.89	409055.82	1968		56548	Urbis	Axia 16 LED 350mA	19 Watts	5.00 Metres	Steel	
Y	26	STREET LIGHTING	SANCTUARY WAY	GRIMSBY	523409.12	409016.88	1968		56549	Urbis	Axia 16 LED 350mA	19 Watts	5.00 Metres	Steel	
Y	27	STREET LIGHTING	SANCTUARY WAY	GRIMSBY	523433.6	408999.48	1968		56550	Urbis	Axia 16 LED 350mA	19 Watts	5.00 Metres	Steel	

Y	28	STREET LIGHTING	SANCTUARY WAY	GRIMSBY	523452.2	408971.77	1968		56551	Urbis	Axia 16 LED 350mA	19 Watts	5.00 Metres	Steel	
Y	29	STREET LIGHTING	SANCTUARY WAY	GRIMSBY	523454.41	408949.04	1968		56552	Urbis	Axia 16 LED 350mA	19 Watts	5.00 Metres	Steel	
Y	30	STREET LIGHTING	SANCTUARY WAY	GRIMSBY	523425.87	408921.97	1968		56553	Urbis	Axia 16 LED 350mA	19 Watts	5.00 Metres	Steel	
Y	31	STREET LIGHTING	SANCTUARY WAY	GRIMSBY	523426.42	408908.44	1968		56554	Urbis	Axia 16 LED 350mA	19 Watts	5.00 Metres	Steel	
Y	32	STREET LIGHTING	SANCTUARY WAY	GRIMSBY	523410.96	408903.1	1968		56555	Urbis	Axia 16 LED 350mA	19 Watts	5.00 Metres	Steel	
Y	33	STREET LIGHTING	SANCTUARY WAY	GRIMSBY	523397.15	408871.34	1968		56556	Urbis	Axia 16 LED 350mA	19 Watts	5.00 Metres	Steel	
Y	34	STREET LIGHTING	SANCTUARY WAY	GRIMSBY	523367.5	408846.76	1968		56557	Urbis	Axia 16 LED 350mA	19 Watts	5.00 Metres	Steel	
Y	35	STREET LIGHTING	SANCTUARY WAY	GRIMSBY	523335.84	408811.69	1968		56558	Urbis	Axia 16 LED 350mA	19 Watts	6.00 Metres	Galvanised Steel	
Y	1	STREET LIGHTING	SWIFTSURE CRESCENT	GRIMSBY	523763.71	407857.62	1995		58692	Urbis	Axia 16 LED 350mA	19 Watts	5.00 Metres	Galvanised Steel	
Y	2	STREET LIGHTING	SWIFTSURE CRESCENT	GRIMSBY	523796.7	407864.08	2019	03/10/2019	67621	Urbis	Axia 16 LED 350mA	19 Watts	6.00 Metres	Galvanised Steel	
Y	3	STREET LIGHTING	SWIFTSURE CRESCENT	GRIMSBY	523830.03	407857.43	1995		58694	Urbis	Axia 16 LED 350mA	19 Watts	6.00 Metres	Galvanised Steel	
Y	4	STREET LIGHTING	SWIFTSURE CRESCENT	GRIMSBY	523858.51	407869.01	2011		58695	Urbis	Axia 16 LED 350mA	19 Watts	6.00 Metres	Galvanised Steel	
Y	5	STREET LIGHTING	SWIFTSURE CRESCENT	GRIMSBY	523891.68	407874.26	1995		58696	Urbis	Axia 16 LED 500mA	28 Watts	6.00 Metres	Galvanised Steel	
Y	6	STREET LIGHTING	SWIFTSURE CRESCENT	GRIMSBY	523886.81	407857.7	2019	03/10/2019	67809	Urbis	Axia 16 LED 350mA	19 Watts	6.00 Metres	Galvanised Steel	
Y	7	STREET LIGHTING	SWIFTSURE CRESCENT	GRIMSBY	523883.92	407836.3	2019	03/10/2019	67810	Urbis	Axia 16 LED 350mA	19 Watts	6.00 Metres	Galvanised Steel	
Y	8	STREET LIGHTING	SWIFTSURE CRESCENT	GRIMSBY	523905.94	407793.72	2019	03/10/2019	67811	Urbis	Axia 16 LED 350mA	19 Watts	6.00 Metres	Galvanised Steel	
Y	9	STREET LIGHTING	SWIFTSURE CRESCENT	GRIMSBY	523904.72	407755.41	1995		58700	Urbis	Axia 16 LED 350mA	19 Watts	5.00 Metres	Galvanised Steel	
Y	10	STREET LIGHTING	SWIFTSURE CRESCENT	GRIMSBY	523910.92	407724.97	1995		58701	Urbis	Axia 16 LED 350mA	19 Watts	6.00 Metres	Galvanised Steel	
Y	11	STREET LIGHTING	SWIFTSURE CRESCENT	GRIMSBY	523890.29	407732.24	1995		58702	Urbis	Axia 16 LED 350mA	19 Watts	6.00 Metres	Galvanised Steel	
Y	12	STREET LIGHTING	SWIFTSURE CRESCENT	GRIMSBY	523858.9	407726.74	1995		58703	Urbis	Axia 16 LED 350mA	19 Watts	6.00 Metres	Galvanised Steel	
Y	13	STREET LIGHTING	SWIFTSURE CRESCENT	GRIMSBY	523829.61	407721.51	2019	03/10/2019	67812	Urbis	Axia 16 LED 350mA	19 Watts	6.00 Metres	Galvanised Steel	
Y	14	STREET LIGHTING	SWIFTSURE CRESCENT	GRIMSBY	523809.15	407717.88	1998		58705	1 Urbis LED	Axia 16 LED 500mA	28 Watts	8.00 Metres	Galvanised Steel	
Y	1	STREET LIGHTING	TEAM GATE	GRIMSBY	523261.53	408986.65	1968		58831	Urbis	Axia 16 LED 350mA	19 Watts	5.00 Metres	Steel	
Y	2	STREET LIGHTING	TEAM GATE	GRIMSBY	523274.82	408958.62	1968		58832	Urbis	Axia 16 LED 350mA	19 Watts	5.00 Metres	Steel	
Y	3	STREET LIGHTING	TEAM GATE	GRIMSBY	523308.37	408934.25	1968		58833	Urbis	Axia 16 LED 350mA	19 Watts	5.00 Metres	Steel	
Y	4	STREET LIGHTING	TEAM GATE	GRIMSBY	523333.05	408896.79	1968		58834	Urbis	Axia 16 LED 350mA	19 Watts	5.00 Metres	Steel	
Y	1	STREET LIGHTING	TIMBERLEY DRIVE	GRIMSBY	523593.27	409287.9	1968		59201	Urbis	AXIA 16 LED 390mA	21 Watts	6.00 Metres	Steel	
Y	2	STREET LIGHTING	TIMBERLEY DRIVE	GRIMSBY	523575.7	409322.89	1968		59202	Urbis	AXIA 16 LED 390mA	21 Watts	5.00 Metres	Steel	
Y	3	STREET LIGHTING	TIMBERLEY DRIVE	GRIMSBY	523546.66	409315.75	2019	23/07/2019	67490	Urbis	AXIA 16 LED 390mA	21 Watts	6.00 Metres	Galvanised Steel	
Y	4	STREET LIGHTING	TIMBERLEY DRIVE	GRIMSBY	523512.81	409296.29	2019	23/07/2019	67496	Urbis	AXIA 16 LED 390mA	21 Watts	6.00 Metres	Galvanised Steel	
Y	5	STREET LIGHTING	TIMBERLEY DRIVE	GRIMSBY	523558.86	409335.39	1968		59205	Urbis	AXIA 16 LED 390mA	21 Watts	5.00 Metres	Steel	
Y	6	STREET LIGHTING	TIMBERLEY DRIVE	GRIMSBY	523577.61	409340.74	1968		59206	Urbis	AXIA 16 LED 390mA	21 Watts	5.00 Metres	Steel	
Y	7	STREET LIGHTING	TIMBERLEY DRIVE	GRIMSBY	523587.96	409360.61	1999		59207	Urbis	AXIA 16 LED 390mA	21 Watts	5.00 Metres	Galvanised Steel	
Y	8	STREET LIGHTING	TIMBERLEY DRIVE	GRIMSBY	523588.31	409387.91	2019	23/07/2019	67695	Urbis	AXIA 16 LED 390mA	21 Watts	6.00 Metres	Galvanised Steel	
Y	9	STREET LIGHTING	TIMBERLEY DRIVE	GRIMSBY	523571.35	409403.43	1968		59209	Urbis	AXIA 16 LED 390mA	21 Watts	5.00 Metres	Steel	
Y	10	STREET LIGHTING	TIMBERLEY DRIVE	GRIMSBY	523570.12	409423.59	2019	23/07/2019	67696	Urbis	AXIA 16 LED 390mA	21 Watts	6.00 Metres	Galvanised Steel	
Y	11	STREET LIGHTING	TIMBERLEY DRIVE	GRIMSBY	523553.56	409433.55	1968		59211	Urbis	AXIA 16 LED 390mA	21 Watts	5.00 Metres	Steel	
Y	12	STREET LIGHTING	TIMBERLEY DRIVE	GRIMSBY	523543.62	409468.81	1968		59212	Urbis	AXIA 16 LED 390mA	21 Watts	5.00 Metres	Steel	
Y	13	STREET LIGHTING	TIMBERLEY DRIVE	GRIMSBY	523518.43	409475.93	1968		59213	Urbis	AXIA 16 LED 390mA	21 Watts	5.00 Metres	Steel	
Y	14	STREET LIGHTING	TIMBERLEY DRIVE	GRIMSBY	523496.11	409448.83	1968		59214	Urbis	AXIA 16 LED 390mA	21 Watts	5.00 Metres	Steel	
Y	15	STREET LIGHTING	TIMBERLEY DRIVE	GRIMSBY	523467.76	409437.05	2015		59215	Urbis	AXIA 16 LED 390mA	21 Watts	6.00 Metres	Galvanised Steel	
Y	16	STREET LIGHTING	TIMBERLEY DRIVE	GRIMSBY	523451.57	409410.49	2019	23/07/2019	67697	Urbis	AXIA 16 LED 390mA	21 Watts	6.00 Metres	Galvanised Steel	
Y	17	STREET LIGHTING	TIMBERLEY DRIVE	GRIMSBY	523419.26	409394.25	1968		59217	Urbis	AXIA 16 LED 390mA	21 Watts	5.00 Metres	Steel	
Y	18	STREET LIGHTING	TIMBERLEY DRIVE	GRIMSBY	523418.42	409366.93	1968		59218	Urbis	AXIA 16 LED 390mA	21 Watts	5.00 Metres	Steel	
Y	19	STREET LIGHTING	TIMBERLEY DRIVE	GRIMSBY	523440.92	409342.06	2015	30/07/2015	59219	Urbis	AXIA 16 LED 390mA	21 Watts	6.00 Metres	Galvanised Steel	
Y	20	STREET LIGHTING	TIMBERLEY DRIVE	GRIMSBY	523468.26	409340	2019	23/07/2019	67698	Urbis	AXIA 16 LED 390mA	21 Watts	6.00 Metres	Galvanised Steel	
Y	21	STREET LIGHTING	TIMBERLEY DRIVE	GRIMSBY	523496.52	409362.1	2019	23/07/2019	67699	Urbis	AXIA 16 LED 390mA	21 Watts	6.00 Metres	Galvanised Steel	
Y	22	STREET LIGHTING	TIMBERLEY DRIVE	GRIMSBY	523518.58	409390.38	1968		59222	Urbis	AXIA 16 LED 390mA	21 Watts	5.00 Metres	Steel	
Y	23	STREET LIGHTING	TIMBERLEY DRIVE	GRIMSBY	523554.34	409407.6	1968		59223	Urbis	AXIA 16 LED 390mA	21 Watts	5.00 Metres	Steel	
Y	1	STREET LIGHTING	TONNANT WAY	GRIMSBY	523630.59	408211.38	1992		59291	Urbis	Axia 8 LED 350mA	10 Watts	6.00 Metres	Galvanised Steel	
Y	2	STREET LIGHTING	TONNANT WAY	GRIMSBY	523636.66	408240.62	1992		59292	Urbis	Axia 8 LED 350mA	10 Watts	6.00 Metres	Galvanised Steel	
Y	3	STREET LIGHTING	TONNANT WAY	GRIMSBY	523641.47	408273.22	1975		59294	Urbis	Axia 8 LED 350mA	10 Watts	6.00 Metres	Galvanised Steel	
Y	4	STREET LIGHTING	TONNANT WAY	GRIMSBY	523630.34	408280.94	1975		59295	Urbis	Axia 8 LED 350mA	10 Watts	6.00 Metres	Galvanised Steel	
Y	1	STREET LIGHTING	TRAFALGAR AVENUE	GRIMSBY	523642.91	408115.42	1987		59393	1 Urbis LED	Axia 16 LED 500mA	28 Watts	5.00 Metres	Galvanised Steel	
Y	2	STREET LIGHTING	TRAFALGAR AVENUE	GRIMSBY	523616.58	408131.82	1963		59394	1 Urbis LED	Axia 16 LED 500mA	28 Watts	5.00 Metres	Steel	
Y	3	STREET LIGHTING	TRAFALGAR AVENUE	GRIMSBY	523587.34	408123.65	1963		59395	1 Urbis LED	Axia 16 LED 500mA	28 Watts	5.00 Metres	Steel	
Y	1	STREET LIGHTING	WYBERS WAY	GRIMSBY	523720.7	409361.33	1994		61302	1 Urbis LED	Teceo 24 LED 500mA	40 Watts	10.00 Metres	Steel	
Y	2	STREET LIGHTING	WYBERS WAY	GRIMSBY	523691.87	409358.71	1994		61303	1 Urbis LED	Teceo 24 LED 500mA	40 Watts	10.00 Metres	Steel	
Y	3	STREET LIGHTING	WYBERS WAY	GRIMSBY	523679.71	409326.81	1994		61304	1 Urbis LED	Teceo 24 LED 500mA	40 Watts	10.00 Metres	Steel	
Y	4	STREET LIGHTING	WYBERS WAY	GRIMSBY	523656.93	409329.09	1994		61305	1 Urbis LED	Teceo 24 LED 500mA	40 Watts	10.00 Metres	Steel	
Y	5	STREET LIGHTING	WYBERS WAY	GRIMSBY	523648.17	409300.66	1994		61306	1 Urbis LED	Teceo 24 LED 500mA	40 Watts	10.00 Metres	Steel	
Y	6	STREET LIGHTING	WYBERS WAY	GRIMSBY	523624.51	409302.58	1994		61307	1 Urbis LED	Teceo 24 LED 500mA	40 Watts	10.00 Metres	Steel	
Y	7	STREET LIGHTING	WYBERS WAY	GRIMSBY	523614.13	409272.53	2020	16/12/2020	68211	Urbis	Teceo 24 LED 500mA	40 Watts	12.00 Metres	Galvanised Steel	
Y	8	STREET LIGHTING	WYBERS WAY	GRIMSBY	523588.06	409272.75	1994		61309	1 Urbis LED	Teceo 24 LED 500mA	40 Watts	10.00 Metres	Steel	
Y	9	STREET LIGHTING	WYBERS WAY	GRIMSBY	523575.17	409241.36	1994		61310	1 Urbis LED	Teceo 24 LED 500mA	40 Watts	10.00 Metres	Steel	
Y	10	STREET LIGHTING	WYBERS WAY	GRIMSBY	523540.47	409233.95	2020	10/01/2020	67724	Urbis	Teceo 24 LED 500mA	40 Watts	10.00 Metres	Galvanised Steel	
Y	11	STREET LIGHTING	WYBERS WAY	GRIMSBY	523531.9	409198.83	1994		61312	1 Urbis LED	Teceo 24 LED 500mA	40 Watts	10.00 Metres	Steel	
Y	12	STREET LIGHTING	WYBERS WAY	GRIMSBY	523505.52	409221.65	1994		61313	1 Urbis LED	Teceo 24 LED 500mA	40 Watts	10.00 Metres	Galvanised Steel	
Y	1	STREET LIGHTING	CORMORANT DRIVE	GRIMSBY	523089.05	409532.57	1976		46699	Urbis	Axia 16 LED 350mA	19 Watts	6.00 Metres	Galvanised Steel	
Y	2	STREET LIGHTING	CORMORANT DRIVE	GRIMSBY	523108.75	409507.35	1976		46700	Urbis	Axia 16 LED 350mA	19 Watts	6.00 Metres	Galvanised Steel	
Y	3	STREET LIGHTING	CORMORANT DRIVE	GRIMSBY	523138.94	409511.31	1976		46701	Urbis	Axia 16 LED 350mA	19 Watts	6.00 Metres	Galvanised Steel	
Y	4	STREET LIGHTING	CORMORANT DRIVE	GRIMSBY	523196.57	409581	1988		46702	Urbis	Axia 16 LED 350mA	19 Watts	6.00 Metres	Galvanised Steel	
Y	5	STREET LIGHTING	CORMORANT DRIVE	GRIMSBY	523221.43	409562.4	1988		46703	Urbis	Axia 16 LED 350mA	19 Watts	6.00 Metres	Galvanised Steel	
Y	6	STREET LIGHTING	CORMORANT DRIVE	GRIMSBY	523191.05	409559.83	1976		46704	Urbis	Axia 16 LED 350mA	19 Watts	6.00 Metres	Galvanised Steel	
Y	7	STREET LIGHTING	CORMORANT DRIVE	GRIMSBY	523169.14	409533.22	1988		46705	Urbis	Axia 16 LED 350mA	19 Watts	6.00 Metres	Galvanised Steel	
Y	8	STREET LIGHTING	CORMORANT DRIVE	GRIMSBY	523175.07	409519.33	2019	03/10/2019	67524	Urbis	Axia 16 LED 350mA	19 Watts	6.00 Metres	Galvanised Steel	
Y	9	STREET LIGHTING	CORMORANT DRIVE	GRIMSBY	523193.44	409493.91	1988		46707	Urbis	Axia 16 LED 350mA	19 Watts	6.00 Metres	Galvanised Steel	
Y	10	STREET LIGHTING	CORMORANT DRIVE	GRIMSBY	523180	409479.09	1988		46708	Urbis	Axia 16 LED 350mA	19 Watts	6.00 Metres	Galvanised Steel	
Y	1	STREET LIGHTING	CYRANO WAY	GRIMSBY	523132.58	409306.03	1976		47213	Urbis	Axia 16 LED 350mA	19 Watts	6.00 Metres	Galvanised Steel	
Y	2	STREET LIGHTING	CYRANO WAY	GRIMSBY	523120.24	409276.2	1976		47214	Urbis	Axia 16 LED 350mA	19 Watts	6.00 Metres	Galvanised Steel	
Y	3	STREET LIGHTING	CYRANO WAY	GRIMSBY	523121.35	409244.26	1976		47215	Urbis	Axia 16 LED 350mA	19 Watts	6.00 Metres	Galvanised Steel	
Y	4	STREET LIGHTING	CYRANO WAY	GRIMSBY	523151.54	409238.37	1976		47216	Urbis	Axia 16 LED 350mA	19 Watts	6.00 Metres	Galvanised Steel	
Y	5	STREET LIGHTING	CYRANO WAY	GRIMSBY	523164.62	409253.56	1976		47217	Urbis	Axia 16 LED 350mA	19 Watts	6.00 Metres	Galvanised Steel	
Y	6	STREET LIGHTING	CYRANO WAY	GRIMSBY	523122.82	409217.01	1976		47218	Urbis	Axia 16 LED 350mA	19 Watts	6.00 Metres	Galvanised Steel	
Y	7	STREET LIGHTING	CYRANO WAY	GRIMSBY	523137	409194.82	1976		47219	Urbis	Axia 16 LED 350mA	19 Watts	6.00 Metres	Galvanised Steel	
Y	8	STREET LIGHTING	CYRANO WAY	GRIMSBY	523099.99	409193.81	1976		47220	Urbis	Axia 16 LED 350mA	19 Watts	6.00 Metres	Galvanised Steel	
Y	9	STREET LIGHTING	CYRANO WAY	GRIMSBY	523070.35	409182.76	1976		47221	Urbis	Axia 16 LED 350mA	19 Watts	6.00 Metres	Galvanised Steel	
Y	10	STREET LIGHTING	CYRANO WAY	GRIMSBY	523079.55	409164.26	1976		47222	Urbis	Axia 16 LED 350mA	19 Watts	6.00 Metres	Galvanised Steel	
Y	11	STREET LIGHTING	CYRANO WAY	GRIMSBY	523095.39	409142.9	1976		47223	Urbis	Axia 16 LED 350mA	19 Watts	6.00 Metres	Galvanised Steel	
Y	12	STREET LIGHTING	CYRANO WAY	GRIMSBY	523046.23	409191.42	1976		47224	Urbis	Axia 16 LED 350mA	19 Watts	6.00 Metres	Galvanised Steel	
Y	13	STREET LIGHTING	CYRANO WAY	GRIMSBY	523028.56	409211.76	1976		47225	Urbis	Axia 16 LED 350mA	19 Watts	5.00 Metres	Galvanised Steel	
Y	14	STREET LIGHTING	CYRANO WAY	GRIMSBY	523044.57	409234.59	1976		47226	Urbis	Axia 16 LED 350mA	19 Watts	5.00 Metres	Galvanised Steel	
Y	15	STREET LIGHTING	CYRANO WAY	GRIMSBY	523060.04	409245.36	1976		47227	Urbis	Axia 16 LED 350mA	19 Watts	5.00 Metres	Galvanised Steel	
Y	16	STREET LIGHTING	CYRANO WAY	GRIMSBY	523034.63	409250.33	1976		47228	Urbis	Axia 16 LED 350mA	19 Watts	5.00 Metres	Galvanised Steel	
Y	17	STREET LIGHTING	CYRANO WAY	GRIMSBY	523020.82	409196.57	2008		47229	Urbis	Axia 16 LED 350mA	19 Watts	6.00 Metres		
Y	18	STREET LIGHTING	CYRANO WAY	GRIMSBY	522993.76	409205.22	1976		47230	Urbis	Axia 16 LED 350mA	19 Watts	6.00 Metres	Galvanised Steel	
Y	1	STREET LIGHTING	ALBATROSS DRIVE	GRIMSBY	522966.79	409396.51	1991		42812	Urbis	Axia 16 LED 350mA	19 Watts	8.00 Metres	Galvanised Steel	
Y	2	STREET LIGHTING	ALBATROSS DRIVE	GRIMSBY	522978.02	409376.45	1991		42813	Urbis	Axia 16 LED 350mA	19 Watts	6.00 Metres	Galvanised Steel	
Y	3	STREET LIGHTING	ALBATROSS DRIVE	GRIMSBY	523004.9	409382.15	2008		42814	Urbis	Axia 16 LED 350mA	19 Watts	6.00 Metres	Steel	
Y	4	STREET LIGHTING	ALBATROSS DRIVE	GRIMSBY	523019.45	409391.73	1991		42815	Urbis	Axia 16 LED 350mA	19 Watts	5.00 Metres	Galvanised Steel	
Y	5	STREET LIGHTING	ALBATROSS DRIVE	GRIMSBY	523037.68	409413.55	1991		42816	Urbis	Axia 16 LED 350mA	19 Watts	5.00 Metres	Galvanised Steel	
Y	6	STREET LIGHTING	ALBATROSS DRIVE	GRIMSBY	523024.79	409430.76	1991		42817	Urbis	Axia 16 LED 350mA	19 Watts	5.00 Metres	Galvanised Steel	
Y	7	STREET LIGHTING	ALBATROSS DRIVE	GRIMSBY	523044.86	409444.75	1991		42818	Urbis	Axia 16 LED 350mA	19 Watts	5.00 Metres	Galvanised Steel	
Y	8	STREET LIGHTING	ALBATROSS DRIVE	GRIMSBY	523075.77	409467.96	2024	12/08/2024	69959	Urbis	Axia 24 LED 500mA	28 Watts	6.00 Metres	Galvanised Steel	
Y	9	STREET LIGHTING	ALBATROSS DRIVE	GRIMSBY	523015.03	409345.79	1991		42820	Urbis	Axia 16 LED 350mA	19 Watts	6.00 Metres	Galvanised Steel	
Y	10	STREET LIGHTING	ALBATROSS DRIVE	GRIMSBY	522998.83	409320.66	1991		42821	Urbis	Axia 16 LED 350mA	19 Watts	6.00 Metres	Galvanised Steel	
Y	11	STREET LIGHTING	ALBATROSS DRIVE	GRIMSBY	522986.49	409279.88	1991		42822	Urbis	Axia 16 LED 350mA	19 Watts	6.00 Metres	Galvanised Steel	
Y	12	STREET LIGHTING	ALBATROSS DRIVE	GRIMSBY	522966.24	409290.56	1991		42823	Urbis	Axia 16 LED 350mA	19 Watts	6.00 Metres	Galvanised Steel	
Y	13	STREET LIGHTING	ALBATROSS DRIVE	GRIMSBY	522948.93	409314.4	1991		42824	Urbis	Axia 16 LED 350mA	19 Watts	6.00 Metres	Galvanised Steel	
Y	14	STREET LIGHTING	ALBATROSS DRIVE	GRIMSBY	522919.66	409323.33	1991		42825	Urbis	Axia 16 LED 350mA	19 Watts	6.00 Metres	Galvanised Steel	

Y	15	STREET LIGHTING	ALBATROSS DRIVE	GRIMSBY	522967.53	409262.21	1991		42826	Urbis	Axia 16 LED 350mA	19 Watts	6.00 Metres	Galvanised Steel	
Y	16	STREET LIGHTING	ALBATROSS DRIVE	GRIMSBY	522952.41	409261.55	1991		42827	Urbis	Axia 16 LED 350mA	19 Watts	6.00 Metres	Galvanised Steel	
Y	17	STREET LIGHTING	ALBATROSS DRIVE	GRIMSBY	522934.18	409237.43	1991		42828	Urbis	Axia 16 LED 350mA	19 Watts	6.00 Metres	Galvanised Steel	
Y	18	STREET LIGHTING	ALBATROSS DRIVE	GRIMSBY	522906.19	409231.45	1991		42829	Urbis	Axia 16 LED 350mA	19 Watts	6.00 Metres	Galvanised Steel	
Y	19	STREET LIGHTING	ALBATROSS DRIVE	GRIMSBY	522891.46	409237.44	1991		42830	Urbis	Axia 16 LED 350mA	19 Watts	6.00 Metres	Galvanised Steel	
Y	20	STREET LIGHTING	ALBATROSS DRIVE	GRIMSBY	522889.07	409277.04	2022	12/10/2022	69036	Urbis	Axia 16 LED 350mA	19 Watts	6.00 Metres	Galvanised Steel	
Y	21	STREET LIGHTING	ALBATROSS DRIVE	GRIMSBY	522889.25	409206.6	1991		42832	Urbis	Axia 16 LED 350mA	19 Watts	6.00 Metres	Galvanised Steel	
Y	22	STREET LIGHTING	ALBATROSS DRIVE	GRIMSBY	522869	409197.02	2009		42833	Urbis	Axia 16 LED 350mA	19 Watts	5.00 Metres	Steel	
Y	23	STREET LIGHTING	ALBATROSS DRIVE	GRIMSBY	522849.12	409218.57	1991		42834	Urbis	Axia 16 LED 350mA	19 Watts	5.00 Metres	Galvanised Steel	
Y	24	STREET LIGHTING	ALBATROSS DRIVE	GRIMSBY	522879.86	409183.77	1991		42835	Urbis	Axia 16 LED 350mA	19 Watts	6.00 Metres	Steel	
Y	25	STREET LIGHTING	ALBATROSS DRIVE	GRIMSBY	522895.14	409153.39	2014	15/11/2014	42836	Urbis	Axia 16 LED 350mA	19 Watts	6.00 Metres	Galvanised Steel	
Y	1	STREET LIGHTING	FORTUNA WAY	GRIMSBY	523164.42	409351.31	1982		48885	Urbis	Axia 16 LED 350mA	19 Watts	6.00 Metres	Galvanised Steel	
Y	2	STREET LIGHTING	FORTUNA WAY	GRIMSBY	523167.97	409378.59	1982		48886	Urbis	Axia 16 LED 350mA	19 Watts	6.00 Metres	Galvanised Steel	
Y	3	STREET LIGHTING	FORTUNA WAY	GRIMSBY	523155.06	409398.9	1982		48887	Urbis	Axia 16 LED 350mA	19 Watts	5.00 Metres	Galvanised Steel	
Y	4	STREET LIGHTING	FORTUNA WAY	GRIMSBY	523143.79	409416.94	1982		48888	Urbis	Axia 16 LED 350mA	19 Watts	5.00 Metres	Galvanised Steel	
Y	5	STREET LIGHTING	FORTUNA WAY	GRIMSBY	523145.18	409442.76	1994		48889	Urbis	Axia 16 LED 350mA	19 Watts	6.00 Metres	Galvanised Steel	
Y	6	STREET LIGHTING	FORTUNA WAY	GRIMSBY	523121.39	409456.75	1988		48890	Urbis	Axia 16 LED 350mA	19 Watts	5.00 Metres	Galvanised Steel	
Y	7	STREET LIGHTING	FORTUNA WAY	GRIMSBY	523183.41	409367.07	1988		48891	Urbis	Axia 16 LED 350mA	19 Watts	6.00 Metres	Galvanised Steel	
Y	8	STREET LIGHTING	FORTUNA WAY	GRIMSBY	523195.44	409394.98	1988		48892	Urbis	Axia 16 LED 350mA	19 Watts	6.00 Metres	Galvanised Steel	
Y	1	STREET LIGHTING	DEFENDER DRIVE	GRIMSBY	522972.45	409239.2	1990		47412	Urbis	Axia 16 LED 350mA	19 Watts	6.00 Metres	Galvanised Steel	
Y	2	STREET LIGHTING	DEFENDER DRIVE	GRIMSBY	522973.56	409203.76	1990		47413	Urbis	Axia 16 LED 350mA	19 Watts	6.00 Metres	Galvanised Steel	
Y	3	STREET LIGHTING	DEFENDER DRIVE	GRIMSBY	522981.1	409179.18	1990		47414	Urbis	Axia 16 LED 350mA	19 Watts	6.00 Metres	Galvanised Steel	
Y	4	STREET LIGHTING	DEFENDER DRIVE	GRIMSBY	522966.01	409176.23	1990		47415	Urbis	Axia 16 LED 350mA	19 Watts	6.00 Metres	Galvanised Steel	
Y	5	STREET LIGHTING	DEFENDER DRIVE	GRIMSBY	522930.66	409175.59	1990		47416	Urbis	Axia 16 LED 350mA	19 Watts	6.00 Metres	Galvanised Steel	
Y	6	STREET LIGHTING	DEFENDER DRIVE	GRIMSBY	522979.08	409156.17	1990		47417	Urbis	Axia 16 LED 350mA	19 Watts	6.00 Metres	Galvanised Steel	
Y	7	STREET LIGHTING	DEFENDER DRIVE	GRIMSBY	522952.93	409107.38	2014		47418	Urbis	Axia 16 LED 350mA	19 Watts	6.00 Metres	Galvanised Steel	
Y	8	STREET LIGHTING	DEFENDER DRIVE	GRIMSBY	522988.28	409123.3	1990		47419	Urbis	Axia 16 LED 350mA	19 Watts	6.00 Metres	Galvanised Steel	
Y	9	STREET LIGHTING	DEFENDER DRIVE	GRIMSBY	523004.67	409135.46	1990		47420	Urbis	Axia 16 LED 350mA	19 Watts	6.00 Metres	Galvanised Steel	
Y	10	STREET LIGHTING	DEFENDER DRIVE	GRIMSBY	523029.89	409107.93	1990		47421	Urbis	Axia 16 LED 350mA	19 Watts	6.00 Metres	Galvanised Steel	
Y	11	STREET LIGHTING	DEFENDER DRIVE	GRIMSBY	523046.19	409109.73	1990		47422	Urbis	Axia 16 LED 350mA	19 Watts	5.00 Metres	Galvanised Steel	
Y	12	STREET LIGHTING	DEFENDER DRIVE	GRIMSBY	523052.63	409092.98	1990		47423	Urbis	Axia 16 LED 350mA	19 Watts	5.00 Metres	Galvanised Steel	
Y	13	STREET LIGHTING	DEFENDER DRIVE	GRIMSBY	523015.16	409077.64	1990		47424	Urbis	Axia 16 LED 350mA	19 Watts	5.00 Metres	Galvanised Steel	
Y	14	STREET LIGHTING	DEFENDER DRIVE	GRIMSBY	523000.43	409063.19	1990		47425	Urbis	Axia 16 LED 350mA	19 Watts	5.00 Metres	Galvanised Steel	
Y	15	STREET LIGHTING	DEFENDER DRIVE	GRIMSBY	523000.99	409036.68	1990		47426	Urbis	Axia 16 LED 350mA	19 Watts	5.00 Metres	Galvanised Steel	
Y	1	STREET LIGHTING	EXETER COURT	GRIMSBY	523703.08	407653.93	1973		48244	Urbis	Axia 16 LED 350mA	19 Watts	6.00 Metres	Galvanised Steel	
Y	2	STREET LIGHTING	EXETER COURT	GRIMSBY	523679.03	407636.4	1973		48245	Urbis	Axia 16 LED 350mA	19 Watts	6.00 Metres	Galvanised Steel	
Y	3	STREET LIGHTING	EXETER COURT	GRIMSBY	523653.08	407632.16	1973		48246	Urbis	Axia 16 LED 350mA	19 Watts	6.00 Metres	Galvanised Steel	
Y	4	STREET LIGHTING	EXETER COURT	GRIMSBY	523648.9	407650.07	1973		48247	Urbis	Axia 16 LED 350mA	19 Watts	6.00 Metres	Galvanised Steel	
Y	1	STREET LIGHTING	ORION WAY	GRIMSBY	523762.95	407747.87	1988		54435	Urbis	Axia 16 LED 350mA	19 Watts	6.00 Metres	Galvanised Steel	
Y	2	STREET LIGHTING	ORION WAY	GRIMSBY	523737.63	407743.51	1988		54436	Urbis	Axia 16 LED 350mA	19 Watts	6.00 Metres	Galvanised Steel	
Y	3	STREET LIGHTING	ORION WAY	GRIMSBY	523712.19	407741.16	1988		54437	Urbis	Axia 16 LED 350mA	19 Watts	6.00 Metres	Galvanised Steel	
Y	4	STREET LIGHTING	ORION WAY	GRIMSBY	523685.23	407760.97	1988		54438	Urbis	Axia 16 LED 350mA	19 Watts	6.00 Metres	Galvanised Steel	
Y	5	STREET LIGHTING	ORION WAY	GRIMSBY	523669.78	407772.93	1988		54439	Urbis	Axia 16 LED 350mA	19 Watts	6.00 Metres	Galvanised Steel	
Y	6	STREET LIGHTING	ORION WAY	GRIMSBY	523637.13	407762.43	1988		54440	Urbis	Axia 16 LED 350mA	19 Watts	6.00 Metres	Galvanised Steel	
Y	7	STREET LIGHTING	ORION WAY	GRIMSBY	523690.67	407780.08	1988		54441	Urbis	Axia 16 LED 350mA	19 Watts	6.00 Metres	Galvanised Steel	
Y	8	STREET LIGHTING	ORION WAY	GRIMSBY	523676.62	407798.5	1988		54442	Urbis	Axia 16 LED 350mA	19 Watts	6.00 Metres	Galvanised Steel	
Y	9	STREET LIGHTING	ORION WAY	GRIMSBY	523666.87	407828.31	1988		54443	1 Urbis LED	Axia 16 LED 500mA	28 Watts	6.00 Metres	Galvanised Steel	
Y	10	STREET LIGHTING	ORION WAY	GRIMSBY	523675.48	407853.18	1988		54444	1 Urbis LED	Axia 16 LED 500mA	28 Watts	6.00 Metres	Galvanised Steel	
Y	11	STREET LIGHTING	ORION WAY	GRIMSBY	523669.78	407870.71	1988		54445	1 Urbis LED	Axia 16 LED 500mA	28 Watts	6.00 Metres	Galvanised Steel	
Y	12	STREET LIGHTING	ORION WAY	GRIMSBY	523630.31	407867.86	1988		54446	1 Urbis LED	Axia 16 LED 500mA	28 Watts	6.00 Metres	Galvanised Steel	
Y	13	STREET LIGHTING	ORION WAY	GRIMSBY	523593.1	407871.91	1988		54447	1 Urbis LED	Axia 16 LED 500mA	28 Watts	6.00 Metres	Galvanised Steel	
Y	14	STREET LIGHTING	ORION WAY	GRIMSBY	523600.06	407843.87	1988		54448	1 Urbis LED	Axia 16 LED 500mA	28 Watts	6.00 Metres	Galvanised Steel	
Y	15	STREET LIGHTING	ORION WAY	GRIMSBY	523558.29	407862.41	1988		54449	1 Urbis LED	Axia 16 LED 500mA	28 Watts	6.00 Metres	Galvanised Steel	
Y	16	STREET LIGHTING	ORION WAY	GRIMSBY	523540.57	407822.1	1988		54450	1 Urbis LED	Axia 16 LED 500mA	28 Watts	6.00 Metres	Galvanised Steel	
Y	17	STREET LIGHTING	ORION WAY	GRIMSBY	523510.3	407833.9	1988		54459	1 Urbis LED	Axia 16 LED 500mA	28 Watts	5.00 Metres	Galvanised Steel	
Y	18	STREET LIGHTING	ORION WAY	GRIMSBY	523534.74	407858.36	1988		54451	1 Urbis LED	Axia 16 LED 500mA	28 Watts	6.00 Metres	Galvanised Steel	
Y	19	STREET LIGHTING	ORION WAY	GRIMSBY	523533.22	407890.13	1988		54452	1 Urbis LED	Axia 16 LED 500mA	28 Watts	6.00 Metres	Galvanised Steel	
Y	20	STREET LIGHTING	ORION WAY	GRIMSBY	523553.6	407919.56	1988		54453	1 Urbis LED	Axia 16 LED 500mA	28 Watts	6.00 Metres	Galvanised Steel	
Y	21	STREET LIGHTING	ORION WAY	GRIMSBY	523591.89	407931.01	2024	18/01/2024	67647	Urbis	Teceo 24 LED 500mA	40 Watts	6.00 Metres	Galvanised Steel	
Y	22	STREET LIGHTING	ORION WAY	GRIMSBY	523548.28	407935.38	1988		54455	1 Urbis LED	Axia 16 LED 500mA	28 Watts	6.00 Metres	Galvanised Steel	
Y	23	STREET LIGHTING	ORION WAY	GRIMSBY	523511.83	407954.11	1988		54456	1 Urbis LED	Axia 16 LED 500mA	28 Watts	6.00 Metres	Galvanised Steel	
Y	24	STREET LIGHTING	ORION WAY	GRIMSBY	523479.8	407979.74	1988		54457	1 Urbis LED	Axia 16 LED 500mA	28 Watts	6.00 Metres	Galvanised Steel	
Y	1	STREET LIGHTING	YARDLEY WAY	GRIMSBY	523442.83	407801.79	1991		61370	1 Urbis LED	Axia 16 LED 500mA	28 Watts	6.00 Metres	Galvanised Steel	
Y	2	STREET LIGHTING	YARDLEY WAY	GRIMSBY	523481.57	407805.91	1991		61371	1 Urbis LED	Axia 16 LED 500mA	28 Watts	6.00 Metres	Galvanised Steel	
Y	3	STREET LIGHTING	YARDLEY WAY	GRIMSBY	523481.44	407852.22	2012	05/11/2012	61372	1 Urbis LED	Axia 16 LED 500mA	28 Watts	6.00 Metres	Steel	
Y	4	STREET LIGHTING	YARDLEY WAY	GRIMSBY	523468.91	407909.64	1991		61373	1 Urbis LED	Axia 16 LED 500mA	28 Watts	6.00 Metres	Galvanised Steel	
Y	5	STREET LIGHTING	YARDLEY WAY	GRIMSBY	523501.57	407936.67	1991		61374	1 Urbis LED	Axia 16 LED 500mA	28 Watts	6.00 Metres	Galvanised Steel	
Y	1	STREET LIGHTING	ROMSEY COURT	GRIMSBY	523512.58	408048.58	1990		56226	Urbis	Axia 16 LED 350mA	19 Watts	6.00 Metres	Galvanised Steel	
Y	2	STREET LIGHTING	ROMSEY COURT	GRIMSBY	523532.59	408011.5	1990		56227	Urbis	Axia 16 LED 350mA	19 Watts	6.00 Metres	Galvanised Steel	
Y	3	STREET LIGHTING	ROMSEY COURT	GRIMSBY	523547.02	408040.04	1990		56228	Urbis	Axia 16 LED 350mA	19 Watts	6.00 Metres	Galvanised Steel	
Y	4	STREET LIGHTING	ROMSEY COURT	GRIMSBY	523560.94	408052.32	1990		56229	Urbis	Axia 16 LED 350mA	19 Watts	6.00 Metres	Galvanised Steel	
Y	5	STREET LIGHTING	ROMSEY COURT	GRIMSBY	523590.69	408057.06	1990		56230	Urbis	Axia 16 LED 350mA	19 Watts	6.00 Metres	Galvanised Steel	
Y	1	STREET LIGHTING	MAXWELL COURT	GRIMSBY	523533.34	408136.56	1984		53425	Urbis	Axia 16 LED 350mA	19 Watts	6.00 Metres	Galvanised Steel	
Y	2	STREET LIGHTING	MAXWELL COURT	GRIMSBY	523543.47	408105.49	1984		53426	Urbis	Axia 16 LED 350mA	19 Watts	6.00 Metres	Galvanised Steel	
Y	1	STREET LIGHTING	YARDLEY WAY FOOTPATH	GRIMSBY	523491.06	407882.24	1991		61375	Urbis	Axia 8 LED 350mA	10 Watts	5.00 Metres	Galvanised Steel	
Y	1	STREET LIGHTING	GLORIA WAY	GRIMSBY	523124.04	409330.35	1975		49319	Urbis	Axia 16 LED 350mA	19 Watts	6.00 Metres	Galvanised Steel	
Y	2	STREET LIGHTING	GLORIA WAY	GRIMSBY	523096.83	409341.68	1975		49320	Urbis	Axia 16 LED 350mA	19 Watts	6.00 Metres	Galvanised Steel	
Y	3	STREET LIGHTING	GLORIA WAY	GRIMSBY	523087.71	409377.83	1975		49321	Urbis	Axia 16 LED 350mA	19 Watts	6.00 Metres	Galvanised Steel	
Y	4	STREET LIGHTING	GLORIA WAY	GRIMSBY	523070.47	409359.93	2011		49322	Urbis	Axia 16 LED 350mA	19 Watts	6.00 Metres	Galvanised Steel	
Y	5	STREET LIGHTING	GLORIA WAY	GRIMSBY	523060.39	409335.11	2011		49323	Urbis	Axia 16 LED 350mA	19 Watts	6.00 Metres	Galvanised Steel	
Y	6	STREET LIGHTING	GLORIA WAY	GRIMSBY	523078.98	409305.36	1975		49324	Urbis	Axia 16 LED 350mA	19 Watts	5.00 Metres	Galvanised Steel	
Y	7	STREET LIGHTING	GLORIA WAY	GRIMSBY	523096.57	409288.21	1975		49325	Urbis	Axia 16 LED 350mA	19 Watts	5.00 Metres	Galvanised Steel	
Y	8	STREET LIGHTING	GLORIA WAY	GRIMSBY	523055.47	409365.03	2011		62516	Urbis	Axia 8 LED 350mA	10 Watts	6.00 Metres	Steel	
Y	9	STREET LIGHTING	GLORIA WAY	GRIMSBY	523034.63	409369.85	2011		62517	Urbis	Axia 8 LED 350mA	10 Watts	6.00 Metres	Steel	
Y	1	STREET LIGHTING	MAIDWELL WAY	GRIMSBY	523402.71	407943.34	1988		53091	Urbis	Axia 16 LED 350mA	19 Watts	6.00 Metres	Galvanised Steel	
Y	2	STREET LIGHTING	MAIDWELL WAY	GRIMSBY	523380.93	407966.57	1988		53092	Urbis	Axia 16 LED 350mA	19 Watts	6.00 Metres	Galvanised Steel	
Y	3	STREET LIGHTING	MAIDWELL WAY	GRIMSBY	523360.56	407973.02	1988		53093	Urbis	Axia 16 LED 350mA	19 Watts	6.00 Metres	Galvanised Steel	
Y	4	STREET LIGHTING	MAIDWELL WAY	GRIMSBY	523328.41	407970.43	1988		53094	Urbis	Axia 16 LED 350mA	19 Watts	6.00 Metres	Galvanised Steel	
Y	5	STREET LIGHTING	MAIDWELL WAY	GRIMSBY	523307.9	407971.88	1988		53095	Urbis	Axia 16 LED 350mA	19 Watts	6.00 Metres	Galvanised Steel	
Y	6	STREET LIGHTING	MAIDWELL WAY	GRIMSBY	523302.46	407946.89	1988		53096	Urbis	Axia 16 LED 350mA	19 Watts	6.00 Metres	Galvanised Steel	
Y	1	STREET LIGHTING	HARLESTONE COURT	GRIMSBY	523387.02	407983.22	1985		50206	Urbis	Axia 16 LED 350mA	19 Watts	5.00 Metres	Galvanised Steel	
Y	2	STREET LIGHTING	HARLESTONE COURT	GRIMSBY	523409.8	408003.16	1985		50207	Urbis	Axia 16 LED 350mA	19 Watts	5.00 Metres	Galvanised Steel	
Y	3	STREET LIGHTING	HARLESTONE COURT	GRIMSBY	523420.18	408034.74	1985		50208	Urbis	Axia 16 LED 350mA	19 Watts	5.00 Metres	Galvanised Steel	
Y	4	STREET LIGHTING	HARLESTONE COURT	GRIMSBY	523395.88	408031.95	2003		50209	Urbis	Axia 8 LED 350mA	10 Watts	6.00 Metres	Galvanised Steel	
Y	1	STREET LIGHTING	SPRATTON COURT	GRIMSBY	523341.45	407954.29	1988		57472	Urbis	Axia 16 LED 350mA	19 Watts	5.00 Metres	Galvanised Steel	
Y	2	STREET LIGHTING	SPRATTON COURT	GRIMSBY	523343.22	407921.89	1988		57473	Urbis	Axia 16 LED 350mA	19 Watts	5.00 Metres	Galvanised Steel	
Y	1	STREET LIGHTING	MAYFAIR DRIVE WEST	GRIMSBY	523637.8	409328.93	1968		53448	Urbis	Axia 16 LED 350mA	19 Watts	5.00 Metres	Steel	
Y	2	STREET LIGHTING	MAYFAIR DRIVE WEST	GRIMSBY	523645.53	409356.18	1968		53449	Urbis	Axia 16 LED 350mA	19 Watts	5.00 Metres	Steel	
Y	3	STREET LIGHTING	MAYFAIR DRIVE WEST	GRIMSBY	523649.21	409379.84	1968		53450	Urbis	Axia 16 LED 350mA	19 Watts	5.00 Metres	Steel	
Y	4	STREET LIGHTING	MAYFAIR DRIVE WEST	GRIMSBY	523640.37	409406.08	1968		53451	Urbis	Axia 16 LED 350mA	19 Watts	5.00 Metres	Steel	
Y	5	STREET LIGHTING	MAYFAIR DRIVE WEST	GRIMSBY	523628.96	409433.6	1998		53452	Urbis	Axia 16 LED 350mA	19 Watts	5.00 Metres	Galvanised Steel	
Y	6	STREET LIGHTING	MAYFAIR DRIVE WEST	GRIMSBY	523616.79	409463.19	2019	23/07/2019	67485	Urbis	AXIA 16 LED 390mA	21 Watts	6.00 Metres	Galvanised Steel	
Y	7	STREET LIGHTING	MAYFAIR DRIVE WEST	GRIMSBY	523598.99	409493.59	2019	23/07/2019	67687	Urbis	AXIA 16 LED 390mA	21 Watts	6.00 Metres	Galvanised Steel	
Y	8	STREET LIGHTING	MAYFAIR DRIVE WEST	GRIMSBY	523582.65	409516.23	2019	23/07/2019	67688	Urbis	AXIA 16 LED 390mA	21 Watts	6.00 Metres	Galvanised Steel	
Y	9	STREET LIGHTING	MAYFAIR DRIVE WEST	GRIMSBY	523557.33	409547.57	2015		53456	Urbis	Axia 16 LED 350mA	19 Watts	6.00 Metres	Galvanised Steel	
Y	10	STREET LIGHTING	MAYFAIR DRIVE WEST	GRIMSBY	523534.5	409575.65	1968		53457	Urbis	Axia 16 LED 350mA	19 Watts	5.00 Metres	Steel	
Y	11	STREET LIGHTING	MAYFAIR DRIVE WEST	GRIMSBY	523515.54	409597.65	1968		53458	Urbis	Axia 16 LED 350mA	19 Watts	5.00 Metres	Steel	
Y	1	STREET LIGHTING	AYLESBY ROAD	GREAT COATES	523276.14	409861.02	2009		43532	1 Urbis LED	Teceo 24 LED 500mA	40 Watts	10.00 Metres	Steel	
Y	2	STREET LIGHTING	AYLESBY ROAD	GREAT COATES	523263.43	409836.35	1989		43533	1 Urbis LED	Teceo 24 LED 500mA	40 Watts	8.00 Metres	Galvanised Steel	
Y	3	STREET LIGHTING	AYLESBY ROAD	GREAT COATES	523251.65	409805.51	1989		43534	1 Urbis LED	Teceo 24 LED 500mA	40 Watts	8.00 Metres	Galvanised Steel	

Y	4	STREET LIGHTING	AYLESBY ROAD	GREAT COATES	523236.18	409781.12	1989		43535	1 Urbis LED	Teceo 24 LED 500mA	40 Watts	8.00 Metres	Galvanised Steel	
Y	5	STREET LIGHTING	AYLESBY ROAD	GREAT COATES	523218.14	409759.12	1989		43536	1 Urbis LED	Teceo 24 LED 500mA	40 Watts	8.00 Metres	Galvanised Steel	
Y	6	STREET LIGHTING	AYLESBY ROAD	GREAT COATES	523191.26	409743.47	1989		43537	1 Urbis LED	Teceo 24 LED 500mA	40 Watts	8.00 Metres	Galvanised Steel	
Y	7	STREET LIGHTING	AYLESBY ROAD	GREAT COATES	523171.74	409717.6	1989		43538	1 Urbis LED	Teceo 24 LED 500mA	40 Watts	8.00 Metres	Galvanised Steel	
Y	8	STREET LIGHTING	AYLESBY ROAD	GREAT COATES	523157.19	409693.2	1989		43539	1 Urbis LED	Teceo 24 LED 500mA	40 Watts	8.00 Metres	Galvanised Steel	
Y	9	STREET LIGHTING	AYLESBY ROAD	GREAT COATES	523145.23	409663.1	1989		43540	1 Urbis LED	Teceo 24 LED 500mA	40 Watts	8.00 Metres	Galvanised Steel	
Y	10	STREET LIGHTING	AYLESBY ROAD	GREAT COATES	523128.81	409625.18	2003		43541	1 Urbis LED	Teceo 24 LED 500mA	40 Watts	8.00 Metres	Stainless Steel	
Y	11	STREET LIGHTING	AYLESBY ROAD	GREAT COATES	523113.52	409584.15	2003		43542	1 Urbis LED	Teceo 24 LED 500mA	40 Watts	8.00 Metres	Stainless Steel	
Y	12	STREET LIGHTING	AYLESBY ROAD	GREAT COATES	523080.3	409557.24	2003		43543	1 Urbis LED	Teceo 24 LED 500mA	40 Watts	8.00 Metres	Stainless Steel	
Y	13	STREET LIGHTING	AYLESBY ROAD	GREAT COATES	523053.3	409523.81	2003		43544	1 Urbis LED	Teceo 24 LED 500mA	40 Watts	8.00 Metres	Stainless Steel	
Y	14	STREET LIGHTING	AYLESBY ROAD	GREAT COATES	523026.29	409494.29	2003		43545	1 Urbis LED	Teceo 24 LED 500mA	40 Watts	8.00 Metres	Stainless Steel	
Y	15	STREET LIGHTING	AYLESBY ROAD	GREAT COATES	523000.03	409465.18	2003		43546	1 Urbis LED	Teceo 24 LED 500mA	40 Watts	8.00 Metres	Stainless Steel	
Y	16	STREET LIGHTING	AYLESBY ROAD	GREAT COATES	522973.34	409435.69	2003		43547	1 Urbis LED	Teceo 24 LED 500mA	40 Watts	8.00 Metres	Stainless Steel	
Y	17	STREET LIGHTING	AYLESBY ROAD	GREAT COATES	522947.95	409407.82	2003		43548	1 Urbis LED	Teceo 24 LED 500mA	40 Watts	8.00 Metres	Stainless Steel	
Y	18	STREET LIGHTING	AYLESBY ROAD	GREAT COATES	522922.49	409379.6	2003		43549	1 Urbis LED	Teceo 24 LED 500mA	40 Watts	8.00 Metres	Stainless Steel	
Y	19	STREET LIGHTING	AYLESBY ROAD	GREAT COATES	522896.1	409350.81	2003		43550	1 Urbis LED	Teceo 24 LED 500mA	40 Watts	8.00 Metres	Stainless Steel	
Y	1	STREET LIGHTING	MANSON CLOSE	GRIMSBY	523762.95	407618.35	1963		53229	Urbis	Axia 16 LED 350mA	19 Watts	5.00 Metres	Galvanised Steel	
Y	2	STREET LIGHTING	MANSON CLOSE	GRIMSBY	523781.81	407633.73	1987		53230	Urbis	Axia 16 LED 350mA	19 Watts	5.00 Metres	Galvanised Steel	
Y	1	STREET LIGHTING	ROCKINGHAM CRESCENT	GRIMSBY	523603.59	407690.7	1990		56219	Urbis	Axia 16 LED 350mA	19 Watts	5.00 Metres	Galvanised Steel	
Y	2	STREET LIGHTING	ROCKINGHAM CRESCENT	GRIMSBY	523588.65	407655.96	1990		56220	Urbis	Axia 16 LED 350mA	19 Watts	5.00 Metres	Galvanised Steel	
Y	3	STREET LIGHTING	ROCKINGHAM CRESCENT	GRIMSBY	523601.06	407651.97	1990		56221	Urbis	Axia 16 LED 350mA	19 Watts	5.00 Metres	Galvanised Steel	
Y	4	STREET LIGHTING	ROCKINGHAM CRESCENT	GRIMSBY	523597.77	407629.5	1990		56222	Urbis	Axia 16 LED 350mA	19 Watts	5.00 Metres	Galvanised Steel	
Y	5	STREET LIGHTING	ROCKINGHAM CRESCENT	GRIMSBY	523580.55	407627.8	1990		56223	Urbis	Axia 16 LED 350mA	19 Watts	5.00 Metres	Galvanised Steel	
Y	1	STREET LIGHTING	SOVEREIGN CLOSE	GRIMSBY	523757.89	407588.61	1963		57442	1 Urbis LED	Axia 16 LED 500mA	28 Watts	5.00 Metres	Galvanised Steel	
Y	2	STREET LIGHTING	SOVEREIGN CLOSE	GRIMSBY	523785.48	407610.95	1963		57443	Urbis	Axia 16 LED 350mA	19 Watts	5.00 Metres	Galvanised Steel	
Y	1	STREET LIGHTING	DEENE CLOSE	GRIMSBY	523545.74	407752.04	1975		47410	Urbis	Axia 16 LED 350mA	19 Watts	5.00 Metres	Galvanised Steel	
Y	2	STREET LIGHTING	DEENE CLOSE	GRIMSBY	523524.33	407767.13	1975		47411	Urbis	Axia 16 LED 350mA	19 Watts	5.00 Metres	Galvanised Steel	
Y	1	STREET LIGHTING	VICTORY WAY	GRIMSBY	523491.82	407695.33	1985		59619	Urbis	Axia 16 LED 350mA	19 Watts	6.00 Metres	Galvanised Steel	
Y	2	STREET LIGHTING	VICTORY WAY	GRIMSBY	523479.03	407682.61	1985		59620	Urbis	Axia 16 LED 350mA	19 Watts	6.00 Metres	Galvanised Steel	
Y	3	STREET LIGHTING	VICTORY WAY	GRIMSBY	523480.81	407663.12	1985		59621	Urbis	Axia 16 LED 350mA	19 Watts	6.00 Metres	Galvanised Steel	
Y	4	STREET LIGHTING	VICTORY WAY	GRIMSBY	523493.09	407646.03	1985		59622	Urbis	Axia 16 LED 350mA	19 Watts	6.00 Metres	Galvanised Steel	
Y	5	STREET LIGHTING	VICTORY WAY	GRIMSBY	523502.2	407625.46	1985		59623	Urbis	Axia 16 LED 350mA	19 Watts	6.00 Metres	Galvanised Steel	
Y	6	STREET LIGHTING	VICTORY WAY	GRIMSBY	523511.82	407646.66	1985		59624	Urbis	Axia 16 LED 350mA	19 Watts	6.00 Metres	Galvanised Steel	
Y	7	STREET LIGHTING	VICTORY WAY	GRIMSBY	523546.25	407638.18	1985		59625	Urbis	Axia 16 LED 350mA	19 Watts	6.00 Metres	Galvanised Steel	
Y	1	STREET LIGHTING	MOULTON CLOSE	GRIMSBY	523661.27	407878.28	1995		54458	Urbis	Axia 16 LED 350mA	19 Watts	5.00 Metres	Galvanised Steel	
Y	2	STREET LIGHTING	MOULTON CLOSE	GRIMSBY	523650.64	407887.2	1995		53887	Urbis	Axia 16 LED 350mA	19 Watts	5.00 Metres	Galvanised Steel	
Y	3	STREET LIGHTING	MOULTON CLOSE	GRIMSBY	523649.88	407915.11	1995		53888	Urbis	Axia 16 LED 350mA	19 Watts	5.00 Metres	Galvanised Steel	
Y	4	STREET LIGHTING	MOULTON CLOSE	GRIMSBY	523636.34	407932.65	1995		53890	Urbis	Axia 16 LED 350mA	19 Watts	5.00 Metres	Galvanised Steel	
Y	5	STREET LIGHTING	MOULTON CLOSE	GRIMSBY	523647.98	407943.34	1995		53889	Urbis	Axia 16 LED 350mA	19 Watts	5.00 Metres	Galvanised Steel	
Y	1	STREET LIGHTING	AUGUSTA CLOSE	GRIMSBY	526137.38	408641.22	2009	28/10/2009	43481	1 Urbis LED	Teceo 32 LED 500mA	28 Watts	6.00 Metres	Galvanised Steel	
Y	2	STREET LIGHTING	AUGUSTA CLOSE	GRIMSBY	526140.96	408607.69	2020	30/06/2020	67883	Urbis	Axia 16 LED 500mA	28 Watts	6.00 Metres	Galvanised Steel	
Y	3	STREET LIGHTING	AUGUSTA CLOSE	GRIMSBY	526123.99	408576.35	2020	30/06/2020	68163	Urbis	Axia 16 LED 500mA	28 Watts	6.00 Metres	Galvanised Steel	
Y	4	STREET LIGHTING	AUGUSTA CLOSE	GRIMSBY	526115.84	408540.79	2013		43484	1 Urbis LED	Axia 16 LED 500mA	28 Watts	6.00 Metres	Galvanised Steel	
Y	5	STREET LIGHTING	AUGUSTA CLOSE	GRIMSBY	526097.43	408510.5	1996		43485	1 Urbis LED	Axia 16 LED 500mA	28 Watts	5.00 Metres	Galvanised Steel	
Y	6	STREET LIGHTING	AUGUSTA CLOSE	GRIMSBY	526102.22	408480.86	2007		43486	1 Urbis LED	Axia 16 LED 500mA	28 Watts	6.00 Metres	Steel	
Y	7	STREET LIGHTING	AUGUSTA CLOSE	GRIMSBY	526089.03	408547.29			67050	Urbis	Axia 8 LED 350mA	10 Watts	6.00 Metres	Steel	
Y	1	STREET LIGHTING	BISHOPS WALK	GRIMSBY	526133.59	408963.52	2011		44180	Urbis	Axia 16 LED 350mA	19 Watts	6.00 Metres	Steel	
Y	2	STREET LIGHTING	BISHOPS WALK	GRIMSBY	526112.25	408940.98	2011		44181	Urbis	Axia 16 LED 350mA	19 Watts	6.00 Metres	Steel	
Y	1	STREET LIGHTING	CANTERBURY DRIVE	GRIMSBY	526163.46	408896.91	2008		45218	1 Urbis LED	Axia 16 LED 500mA	28 Watts	6.00 Metres	Steel	
Y	2	STREET LIGHTING	CANTERBURY DRIVE	GRIMSBY	526181.26	408876.19	2008		45219	1 Urbis LED	Axia 16 LED 500mA	28 Watts	6.00 Metres	Steel	
Y	3	STREET LIGHTING	CANTERBURY DRIVE	GRIMSBY	526160.28	408847.55	2008		45220	1 Urbis LED	Axia 16 LED 500mA	28 Watts	6.00 Metres	Steel	
Y	4	STREET LIGHTING	CANTERBURY DRIVE	GRIMSBY	526149.96	408823.1	2008		45221	1 Urbis LED	Axia 16 LED 500mA	28 Watts	6.00 Metres	Steel	
Y	5	STREET LIGHTING	CANTERBURY DRIVE	GRIMSBY	526133.67	408784.58	2008		45222	1 Urbis LED	Axia 16 LED 500mA	28 Watts	6.00 Metres	Steel	
Y	6	STREET LIGHTING	CANTERBURY DRIVE	GRIMSBY	526129.59	408754.26	2008		45223	1 Urbis LED	Axia 16 LED 500mA	28 Watts	6.00 Metres	Steel	
Y	7	STREET LIGHTING	CANTERBURY DRIVE	GRIMSBY	526102.84	408748.72	2008		45224	1 Urbis LED	Axia 16 LED 500mA	28 Watts	6.00 Metres	Steel	
Y	8	STREET LIGHTING	CANTERBURY DRIVE	GRIMSBY	526080.19	408758.55	2008		45225	1 Urbis LED	Axia 16 LED 500mA	28 Watts	6.00 Metres	Steel	
Y	9	STREET LIGHTING	CANTERBURY DRIVE	GRIMSBY	526056.28	408780.09	2008		45226	1 Urbis LED	Axia 16 LED 500mA	28 Watts	6.00 Metres	Steel	
Y	1	STREET LIGHTING	CARLTON ROAD	GRIMSBY	525885.51	408906.89	2008		45256	1 Urbis LED	Axia 16 LED 500mA	28 Watts	6.00 Metres	Galvanised Steel	
Y	2	STREET LIGHTING	CARLTON ROAD	GRIMSBY	525904.5	408883.29	2008		45257	1 Urbis LED	Axia 16 LED 500mA	28 Watts	6.00 Metres	Galvanised Steel	
Y	3	STREET LIGHTING	CARLTON ROAD	GRIMSBY	525925	408870	2002		45258	1 Urbis LED	Axia 16 LED 500mA	28 Watts	6.00 Metres	Stainless Steel	
Y	4	STREET LIGHTING	CARLTON ROAD	GRIMSBY	525942	408851	2002		45259	1 Urbis LED	Axia 16 LED 500mA	28 Watts	6.00 Metres	Stainless Steel	
Y	5	STREET LIGHTING	CARLTON ROAD	GRIMSBY	525956.4	408824.05	2008		45260	1 Urbis LED	Axia 16 LED 500mA	28 Watts	6.00 Metres	Galvanised Steel	
Y	1	STREET LIGHTING	CARSON AVENUE	GRIMSBY	525536.52	408859.08	2015	30/07/2015	45381	1 Urbis LED	Axia 16 LED 500mA	28 Watts	6.00 Metres	Galvanised Steel	
Y	2	STREET LIGHTING	CARSON AVENUE	GRIMSBY	525541.46	408818.51	2015	30/07/2015	45382	1 Urbis LED	Axia 16 LED 500mA	28 Watts	6.00 Metres	Galvanised Steel	
Y	3	STREET LIGHTING	CARSON AVENUE	GRIMSBY	525534.75	408776.87	2015	30/07/2015	45383	1 Urbis LED	Axia 16 LED 500mA	28 Watts	6.00 Metres	Galvanised Steel	
Y	1	STREET LIGHTING	CLIFTON ROAD	GRIMSBY	525612.68	409111.07	1993		46309	Urbis	Axia 16 LED 350mA	19 Watts	6.00 Metres	Galvanised Steel	
Y	2	STREET LIGHTING	CLIFTON ROAD	GRIMSBY	525586.86	409111.89	1993		46310	Urbis	Axia 16 LED 350mA	19 Watts	6.00 Metres	Galvanised Steel	
Y	3	STREET LIGHTING	CLIFTON ROAD	GRIMSBY	525569.64	409085.75	1993		46311	Urbis	Axia 16 LED 350mA	19 Watts	6.00 Metres	Galvanised Steel	
Y	4	STREET LIGHTING	CLIFTON ROAD	GRIMSBY	525548.25	409068.48	1993		46312	Urbis	Axia 16 LED 350mA	19 Watts	6.00 Metres	Galvanised Steel	
Y	5	STREET LIGHTING	CLIFTON ROAD	GRIMSBY	525522.05	409059.43	1993		46313	Urbis	Axia 16 LED 350mA	19 Watts	6.00 Metres	Galvanised Steel	
Y	6	STREET LIGHTING	CLIFTON ROAD	GRIMSBY	525501.17	409042.34	1993		46314	Urbis	Axia 16 LED 350mA	19 Watts	6.00 Metres	Galvanised Steel	
Y	7	STREET LIGHTING	CLIFTON ROAD	GRIMSBY	525482.69	409018.04	1993		46315	Urbis	Axia 16 LED 350mA	19 Watts	6.00 Metres	Galvanised Steel	
Y	8	STREET LIGHTING	CLIFTON ROAD	GRIMSBY	525479.4	408993.92	1993		46316	Urbis	Axia 16 LED 350mA	19 Watts	6.00 Metres	Galvanised Steel	
Y	9	STREET LIGHTING	CLIFTON ROAD	GRIMSBY	525458.01	408972.85	1993		46317	Urbis	Axia 16 LED 350mA	19 Watts	6.00 Metres	Galvanised Steel	
Y	10	STREET LIGHTING	CLIFTON ROAD	GRIMSBY	525453.07	408944.12	1993		46318	Urbis	Axia 16 LED 350mA	19 Watts	6.00 Metres	Galvanised Steel	
Y	1	STREET LIGHTING	COLLEGE STREET	GRIMSBY	526435.81	408748.41	1988		46387	1 Urbis LED	Axia 16 LED 500mA	28 Watts	6.00 Metres	Galvanised Steel	
Y	2	STREET LIGHTING	COLLEGE STREET	GRIMSBY	526403.96	408745.1	1988		46388	1 Urbis LED	Axia 16 LED 500mA	28 Watts	6.00 Metres	Galvanised Steel	
Y	3	STREET LIGHTING	COLLEGE STREET	GRIMSBY	526376.89	408741.87	1988		46389	1 Urbis LED	Axia 16 LED 500mA	28 Watts	6.00 Metres	Galvanised Steel	
Y	4	STREET LIGHTING	COLLEGE STREET	GRIMSBY	526347.25	408738.47	1989		46390	1 Urbis LED	Axia 16 LED 500mA	28 Watts	6.00 Metres	Galvanised Steel	
Y	5	STREET LIGHTING	COLLEGE STREET	GRIMSBY	526317.42	408741.05	1989		46391	1 Urbis LED	Axia 16 LED 500mA	28 Watts	6.00 Metres	Galvanised Steel	
Y	6	STREET LIGHTING	COLLEGE STREET	GRIMSBY	526287.05	408756.15	1989		46392	1 Urbis LED	Axia 16 LED 500mA	28 Watts	6.00 Metres	Galvanised Steel	
Y	7	STREET LIGHTING	COLLEGE STREET	GRIMSBY	526259.43	408761.76	1989		46393	1 Urbis LED	Axia 16 LED 500mA	28 Watts	6.00 Metres	Galvanised Steel	
Y	8	STREET LIGHTING	COLLEGE STREET	GRIMSBY	526232.36	408767.19	1990		46394	1 Urbis LED	Axia 16 LED 500mA	28 Watts	6.00 Metres	Galvanised Steel	
Y	9	STREET LIGHTING	COLLEGE STREET	GRIMSBY	526270.18	408778.23	2010	01/02/2010	66709	1 Urbis LED	Axia 16 LED 500mA	28 Watts	6.00 Metres	Galvanised Steel	
Y	10	STREET LIGHTING	COLLEGE STREET	GRIMSBY	526186.99	408767.15	2010		46395	1 Urbis LED	Axia 16 LED 500mA	28 Watts	6.00 Metres	Galvanised Steel	
Y	11	STREET LIGHTING	COLLEGE STREET	GRIMSBY	526172.34	408779.53	1993		46396	1 Urbis LED	Axia 16 LED 500mA	28 Watts	6.00 Metres	Galvanised Steel	
Y	12	STREET LIGHTING	COLLEGE STREET	GRIMSBY	526153.56	408783.31	1993		46397	1 Urbis LED	Axia 16 LED 500mA	28 Watts	6.00 Metres	Galvanised Steel	
Y	1	STREET LIGHTING	COMPTON DRIVE	GRIMSBY	526062.35	409042.46	2011		46494	Urbis	Axia 16 LED 350mA	19 Watts	6.00 Metres	Steel	
Y	2	STREET LIGHTING	COMPTON DRIVE	GRIMSBY	526072.78	409022.04	2011		46495	Urbis	Axia 16 LED 350mA	19 Watts	6.00 Metres	Steel	
Y	3	STREET LIGHTING	COMPTON DRIVE	GRIMSBY	526099.24	409015.15	2011		46496	Urbis	Axia 16 LED 350mA	19 Watts	6.00 Metres	Steel	
Y	4	STREET LIGHTING	COMPTON DRIVE	GRIMSBY	526114.51	408990.72	2011		46497	Urbis	Axia 16 LED 350mA	19 Watts	6.00 Metres	Steel	
Y	5	STREET LIGHTING	COMPTON DRIVE	GRIMSBY	526144.07	408981.96	2011		46498	Urbis	Axia 16 LED 350mA	19 Watts	6.00 Metres	Steel	
Y	6	STREET LIGHTING	COMPTON DRIVE	GRIMSBY	526160.84	408956.37	2011		46499	Urbis	Axia 16 LED 350mA	19 Watts	6.00 Metres	Steel	
Y	7	STREET LIGHTING	COMPTON DRIVE	GRIMSBY	526190.72	408946.88	2011		46500	Urbis	Axia 16 LED 350mA	19 Watts	6.00 Metres	Steel	
Y	8	STREET LIGHTING	COMPTON DRIVE	GRIMSBY	526210.83	408919.38	2011		46501	Urbis	Axia 16 LED 350mA	19 Watts	6.00 Metres	Steel	
Y	1	STREET LIGHTING	CORINTHIAN AVENUE	GRIMSBY	525607.08	408863.35	2015	30/07/2015	46696	1 Urbis LED	Axia 16 LED 500mA	28 Watts	6.00 Metres	Galvanised Steel	
Y	2	STREET LIGHTING	CORINTHIAN AVENUE	GRIMSBY	525598.72	408819.8	2015	30/07/2015	46697	1 Urbis LED	Axia 16 LED 500mA	28 Watts	6.00 Metres	Galvanised Steel	
Y	3	STREET LIGHTING	CORINTHIAN AVENUE	GRIMSBY	525606	408778	2001		46698	1 Urbis LED	Axia 16 LED 500mA	28 Watts	6.00 Metres	Galvanised Steel	
Y	1	STREET LIGHTING	DUDLEY STREET	GRIMSBY	526482.02	408990.41	1989		47581	1 Urbis LED	Ampera 48 LED 700mA	104 Watts	10.00 Metres	Galvanised Steel	
Y	2	STREET LIGHTING	DUDLEY STREET	GRIMSBY	526465.29	409017.7	1989		47582	1 Urbis LED	Teceo 48 LED 700mA	104 Watts	10.00 Metres	Galvanised Steel	
Y	3	STREET LIGHTING	DUDLEY STREET	GRIMSBY	526428.2	409034.34	1989		47583	1 Urbis LED	Teceo 48 LED 700mA	104 Watts	10.00 Metres	Galvanised Steel	
Y	4	STREET LIGHTING	DUDLEY STREET	GRIMSBY	526384.02	409046.18	1989		47584	1 Urbis LED	Teceo 48 LED 700mA	104 Watts	10.00 Metres	Galvanised Steel	
Y	5	STREET LIGHTING	DUDLEY STREET	GRIMSBY	526335.29	409071.81	1989		47585	1 Urbis LED	Teceo 48 LED 700mA	104 Watts	10.00 Metres	Galvanised Steel	
Y	6	STREET LIGHTING	DUDLEY STREET	GRIMSBY	526312.76	409096.3	1989		47586	1 Urbis LED	Teceo 48 LED 700mA	104 Watts	10.00 Metres	Galvanised Steel	
Y	7	STREET LIGHTING	DUDLEY STREET	GRIMSBY	526277.06	409103.07	1989		47587	1 Urbis LED	Teceo 48 LED 700mA	104 Watts	10.00 Metres	Galvanised Steel	
Y	8	STREET LIGHTING	DUDLEY STREET	GRIMSBY	526234.78	409125.73	1989		47588	1 Urbis LED	Teceo 48 LED 700mA	104 Watts	10.00 Metres	Galvanised Steel	
Y	9	STREET LIGHTING	DUDLEY STREET	GRIMSBY	526219.47	409146.29	1989		47589	1 Urbis LED	Teceo 48 LED 700mA	104 Watts	10.00 Metres	Galvanised Steel	
Y	1	STREET LIGHTING	FAIRFAX ROAD	GRIMSBY	525861.34	409217.07	1976		48248	1 Urbis LED	Teceo 24 LED 500mA	40 Watts	6.00 Metres	Galvanised Steel	
Y	2	STREET LIGHTING	FAIRFAX ROAD	GRIMSBY	525821.46	409245.66	1976		48249	1 Urbis LED	Teceo 24 LED 500mA	40 Watts	6.00 Metres	Galvanised Steel	
Y	3	STREET LIGHTING	FAIRFAX ROAD	GRIMSBY	525776.78	409261.3	1976		48250	1 Urbis LED	Teceo 24 LED 500mA	40 Watts	6.00 Metres	Galvanised Steel	

Y	4	STREET LIGHTING	FAIRFAX ROAD	GRIMSBY	525741.21	409287.81	1976		48251	1 Urbis LED	Teceo 24 LED 500mA	40 Watts	6.00 Metres	Galvanised Steel	
Y	1	STREET LIGHTING	HEATHFIELD COURT	GRIMSBY	525929.38	408581.16	1963		50463	Urbis	Axia 16 LED 350mA	19 Watts	5.00 Metres	Steel	
Y	2	STREET LIGHTING	HEATHFIELD COURT	GRIMSBY	525922.74	408556.56	2020	04/06/2020	67869	Urbis	Axia 16 LED 350mA	19 Watts	6.00 Metres	Galvanised Steel	
Y	3	STREET LIGHTING	HEATHFIELD COURT	GRIMSBY	525929.56	408534.12	1963		50465	Urbis	Axia 16 LED 350mA	19 Watts	5.00 Metres	Steel	
Y	1	STREET LIGHTING	LANDECK AVENUE	GRIMSBY	525765.93	408920.02	1995		52241	Urbis	Axia 16 LED 350mA	19 Watts	6.00 Metres	Galvanised Steel	
Y	2	STREET LIGHTING	LANDECK AVENUE	GRIMSBY	525771.38	408945.34	1995		52242	Urbis	Axia 16 LED 350mA	19 Watts	6.00 Metres	Galvanised Steel	
Y	3	STREET LIGHTING	LANDECK AVENUE	GRIMSBY	525761.88	408980.27	1995		52243	Urbis	Axia 16 LED 350mA	19 Watts	6.00 Metres	Galvanised Steel	
Y	4	STREET LIGHTING	LANDECK AVENUE	GRIMSBY	525763.91	409008.69	1995		52244	Urbis	Axia 16 LED 350mA	19 Watts	6.00 Metres	Galvanised Steel	
Y	5	STREET LIGHTING	LANDECK AVENUE	GRIMSBY	525795.3	409017.61	1995		52245	Urbis	Axia 16 LED 350mA	19 Watts	6.00 Metres	Galvanised Steel	
Y	6	STREET LIGHTING	LANDECK AVENUE	GRIMSBY	525806.31	408994.07	1995		52246	Urbis	Axia 16 LED 350mA	19 Watts	6.00 Metres	Galvanised Steel	
Y	7	STREET LIGHTING	LANDECK AVENUE	GRIMSBY	525806.57	408962.49	1995		52247	Urbis	Axia 16 LED 350mA	19 Watts	6.00 Metres	Galvanised Steel	
Y	8	STREET LIGHTING	LANDECK AVENUE	GRIMSBY	525777.2	408964.96	1995		52248	Urbis	Axia 16 LED 350mA	19 Watts	6.00 Metres	Galvanised Steel	
Y	1	STREET LIGHTING	LITTLE JOHN STREET	GRIMSBY	525822.57	409084.34	1997		52676	Urbis	Axia 16 LED 350mA	19 Watts	6.00 Metres	Galvanised Steel	
Y	2	STREET LIGHTING	LITTLE JOHN STREET	GRIMSBY	525844.37	409061.16	1997		52677	Urbis	Axia 16 LED 350mA	19 Watts	6.00 Metres	Galvanised Steel	
Y	1	STREET LIGHTING	LITTLE MICHAEL STREET	GRIMSBY	525925.39	409201.57	1999		52678	Urbis	Axia 16 LED 350mA	19 Watts	5.00 Metres	Galvanised Steel	
Y	2	STREET LIGHTING	LITTLE MICHAEL STREET	GRIMSBY	525950.83	409174.8	1999		52679	Urbis	Axia 16 LED 350mA	19 Watts	5.00 Metres	Galvanised Steel	
Y	3	STREET LIGHTING	LITTLE MICHAEL STREET	GRIMSBY	525960.32	409153.47	1999		52680	Urbis	Axia 16 LED 350mA	19 Watts	5.00 Metres	Galvanised Steel	
Y	1	STREET LIGHTING	MARKLEW AVENUE	GRIMSBY	525732.02	409374.73	1985		53349	Urbis	Axia 24 LED 1000mA	80 Watts	6.00 Metres	Galvanised Steel	
Y	2	STREET LIGHTING	MARKLEW AVENUE	GRIMSBY	525713.03	409337.77	1985		53350	Urbis	Axia 24 LED 1000mA	80 Watts	6.00 Metres	Galvanised Steel	
Y	3	STREET LIGHTING	MARKLEW AVENUE	GRIMSBY	525717.97	409302.07	1985		53351	Urbis	Axia 24 LED 1000mA	80 Watts	6.00 Metres	Galvanised Steel	
Y	4	STREET LIGHTING	MARKLEW AVENUE	GRIMSBY	525703.54	409267.77	1985		53352	Urbis	Axia 24 LED 1000mA	80 Watts	6.00 Metres	Galvanised Steel	
Y	5	STREET LIGHTING	MARKLEW AVENUE	GRIMSBY	525697.72	409229.67	1985		53353	Urbis	Axia 24 LED 1000mA	80 Watts	6.00 Metres	Galvanised Steel	
Y	6	STREET LIGHTING	MARKLEW AVENUE	GRIMSBY	525668.11	409194.29	2024	23/02/2024	69842	Urbis	Axia 24 LED 1000mA	80 Watts	6.00 Metres	Galvanised Steel	
Y	7	STREET LIGHTING	MARKLEW AVENUE	GRIMSBY	525657.84	409150.17	2017		53355	Urbis	Axia 24 LED 1000mA	80 Watts	6.00 Metres	Galvanised Steel	
Y	8	STREET LIGHTING	MARKLEW AVENUE	GRIMSBY	525651.26	409132.63	2003		53356	Urbis	Axia 24 LED 1000mA	80 Watts	6.00 Metres	Stainless Steel	
Y	9	STREET LIGHTING	MARKLEW AVENUE	GRIMSBY	525627.49	409118.95	2003		53357	Urbis	Axia 24 LED 1000mA	80 Watts	6.00 Metres	Stainless Steel	
Y	1	STREET LIGHTING	MARSHALL AVENUE	GRIMSBY	525929.41	409241.96	2021	09/08/2021	68604	Urbis	Teceo 32 LED 500mA	52 Watts	6.00 Metres	Galvanised Steel	
Y	2	STREET LIGHTING	MARSHALL AVENUE	GRIMSBY	525910.05	409201.33	1984		53390	1 Urbis LED	Teceo 32 LED 500mA	52 Watts	6.00 Metres	Galvanised Steel	
Y	3	STREET LIGHTING	MARSHALL AVENUE	GRIMSBY	525879.8	409175.95	2016		53391	1 Urbis LED	Teceo 32 LED 500mA	52 Watts	6.00 Metres	Galvanised Steel	
Y	4	STREET LIGHTING	MARSHALL AVENUE	GRIMSBY	525862.2	409151.71	1984		53392	1 Urbis LED	Teceo 32 LED 500mA	52 Watts	6.00 Metres	Galvanised Steel	
Y	5	STREET LIGHTING	MARSHALL AVENUE	GRIMSBY	525852.58	409130.63	1984		53393	1 Urbis LED	Teceo 32 LED 500mA	52 Watts	6.00 Metres	Galvanised Steel	
Y	6	STREET LIGHTING	MARSHALL AVENUE	GRIMSBY	525826.76	409118.67	1984		53394	1 Urbis LED	Teceo 32 LED 500mA	52 Watts	6.00 Metres	Galvanised Steel	
Y	7	STREET LIGHTING	MARSHALL AVENUE	GRIMSBY	525805.37	409075.13	1984		53395	1 Urbis LED	Teceo 32 LED 500mA	52 Watts	6.00 Metres	Galvanised Steel	
Y	8	STREET LIGHTING	MARSHALL AVENUE	GRIMSBY	525769.04	409059.37	1984		53396	Urbis	AXIA 3.2 24 LED 540mA	41 Watts	6.00 Metres	Galvanised Steel	
Y	9	STREET LIGHTING	MARSHALL AVENUE	GRIMSBY	525731.2	409034.94	1984		53397	1 Urbis LED	Teceo 32 LED 500mA	52 Watts	6.00 Metres	Galvanised Steel	
Y	1	STREET LIGHTING	MORTON ROAD	GRIMSBY	525768.39	409096.81	1992		53881	1 Urbis LED	Teceo 24 LED 500mA	40 Watts	6.00 Metres	Galvanised Steel	
Y	2	STREET LIGHTING	MORTON ROAD	GRIMSBY	525732.57	409123.71	1992		53882	1 Urbis LED	Teceo 24 LED 500mA	40 Watts	6.00 Metres	Galvanised Steel	
Y	3	STREET LIGHTING	MORTON ROAD	GRIMSBY	525695.1	409135.03	1992		53883	1 Urbis LED	Teceo 24 LED 500mA	40 Watts	6.00 Metres	Galvanised Steel	
Y	1	STREET LIGHTING	NORMAN ROAD	GRIMSBY	525540.25	409224.94	1999		54196	1 Urbis LED	Axia 16 LED 500mA	28 Watts	6.00 Metres	Aluminium	
Y	2	STREET LIGHTING	NORMAN ROAD	GRIMSBY	525551.01	409201.34	1999		54197	1 Urbis LED	Axia 16 LED 500mA	28 Watts	6.00 Metres	Aluminium	
Y	3	STREET LIGHTING	NORMAN ROAD	GRIMSBY	525572.02	409181.4	1999		54198	1 Urbis LED	Axia 16 LED 500mA	28 Watts	6.00 Metres	Aluminium	
Y	4	STREET LIGHTING	NORMAN ROAD	GRIMSBY	525594.68	409174.76	1999		54199	1 Urbis LED	Axia 16 LED 500mA	28 Watts	6.00 Metres	Aluminium	
Y	5	STREET LIGHTING	NORMAN ROAD	GRIMSBY	525607.97	409147.73	1999		54200	1 Urbis LED	Axia 16 LED 500mA	28 Watts	6.00 Metres	Aluminium	
Y	6	STREET LIGHTING	NORMAN ROAD	GRIMSBY	525627.97	409133.87	1999		54201	1 Urbis LED	Axia 16 LED 500mA	28 Watts	6.00 Metres	Aluminium	
Y	1	STREET LIGHTING	NORTHUMBERLAND CLOSE	GRIMSBY	525985.53	408641.86	1963		54270	Urbis	Axia 16 LED 350mA	19 Watts	5.00 Metres	Steel	
Y	2	STREET LIGHTING	NORTHUMBERLAND CLOSE	GRIMSBY	525962.33	408625.11	1963		54271	Urbis	Axia 16 LED 350mA	19 Watts	5.00 Metres	Steel	
Y	3	STREET LIGHTING	NORTHUMBERLAND CLOSE	GRIMSBY	525961.59	408590.59	1963		54272	Urbis	Axia 16 LED 350mA	19 Watts	5.00 Metres	Steel	
Y	4	STREET LIGHTING	NORTHUMBERLAND CLOSE	GRIMSBY	525986.26	408568.95	1963		54273	Urbis	Axia 16 LED 350mA	19 Watts	5.00 Metres	Steel	
Y	5	STREET LIGHTING	NORTHUMBERLAND CLOSE	GRIMSBY	526018.11	408561.87	1963		54274	Urbis	Axia 16 LED 350mA	19 Watts	5.00 Metres	Steel	
Y	6	STREET LIGHTING	NORTHUMBERLAND CLOSE	GRIMSBY	526033.03	408533.79	1963		54275	Urbis	Axia 16 LED 350mA	19 Watts	5.00 Metres	Steel	
Y	7	STREET LIGHTING	NORTHUMBERLAND CLOSE	GRIMSBY	526009.28	408516.85	1963		54276	Urbis	Axia 16 LED 350mA	19 Watts	5.00 Metres	Steel	
Y	8	STREET LIGHTING	NORTHUMBERLAND CLOSE	GRIMSBY	525996.2	408498.35	1963		54277	Urbis	Axia 16 LED 350mA	19 Watts	5.00 Metres	Steel	
Y	9	STREET LIGHTING	NORTHUMBERLAND CLOSE	GRIMSBY	525996.57	408475.79	1963		54278	Urbis	Axia 16 LED 350mA	19 Watts	5.00 Metres	Steel	
Y	10	STREET LIGHTING	NORTHUMBERLAND CLOSE	GRIMSBY	526048.15	408556.88	2014		54279	Urbis	Axia 8 LED 350mA	10 Watts	6.00 Metres	Galvanised Steel	
Y	1	STREET LIGHTING	PELHAM ROAD	GRIMSBY	526455.71	408912.82	2002		55163	1 Urbis LED	Axia 16 LED 500mA	28 Watts	6.00 Metres	Stainless Steel	
Y	2	STREET LIGHTING	PELHAM ROAD	GRIMSBY	526439.05	408934.11	2002		55164	1 Urbis LED	Axia 16 LED 500mA	28 Watts	6.00 Metres	Stainless Steel	
Y	3	STREET LIGHTING	PELHAM ROAD	GRIMSBY	526415.7	408932.82	2002		55165	1 Urbis LED	Axia 16 LED 500mA	28 Watts	6.00 Metres	Stainless Steel	
Y	4	STREET LIGHTING	PELHAM ROAD	GRIMSBY	526395.5	408955.89	2002		55166	1 Urbis LED	Axia 16 LED 500mA	28 Watts	6.00 Metres	Stainless Steel	
Y	5	STREET LIGHTING	PELHAM ROAD	GRIMSBY	526370.11	408957.21	2002		55167	1 Urbis LED	Axia 16 LED 500mA	28 Watts	6.00 Metres	Stainless Steel	
Y	6	STREET LIGHTING	PELHAM ROAD	GRIMSBY	526355.38	408977.04	2002		55168	1 Urbis LED	Axia 16 LED 500mA	28 Watts	6.00 Metres	Stainless Steel	
Y	7	STREET LIGHTING	PELHAM ROAD	GRIMSBY	526323.74	408982.74	2002		55169	1 Urbis LED	Axia 16 LED 500mA	28 Watts	6.00 Metres	Stainless Steel	
Y	8	STREET LIGHTING	PELHAM ROAD	GRIMSBY	526316.39	409007.07	2002		55170	1 Urbis LED	Axia 16 LED 500mA	28 Watts	6.00 Metres	Stainless Steel	
Y	9	STREET LIGHTING	PELHAM ROAD	GRIMSBY	526337.26	409026.87	2002		55171	1 Urbis LED	Axia 16 LED 500mA	28 Watts	6.00 Metres	Stainless Steel	
Y	10	STREET LIGHTING	PELHAM ROAD	GRIMSBY	526351.68	409055.14	2002		55172	1 Urbis LED	Axia 16 LED 500mA	28 Watts	6.00 Metres	Stainless Steel	
Y	11	STREET LIGHTING	PELHAM ROAD	GRIMSBY	526354.87	409080.73	2002		55173	1 Urbis LED	Axia 16 LED 500mA	28 Watts	6.00 Metres	Stainless Steel	
Y	12	STREET LIGHTING	PELHAM ROAD	GRIMSBY	526376.22	409103.32	2002		55174	1 Urbis LED	Axia 16 LED 500mA	28 Watts	6.00 Metres	Stainless Steel	
Y	1	STREET LIGHTING	PHYLLIS AVENUE	GRIMSBY	525855.08	408997.44	1978		55422	1 Urbis LED	Axia 16 LED 500mA	28 Watts	6.00 Metres	Galvanised Steel	
Y	2	STREET LIGHTING	PHYLLIS AVENUE	GRIMSBY	525891.54	409027.12	1978		55423	1 Urbis LED	Axia 16 LED 500mA	28 Watts	6.00 Metres	Galvanised Steel	
Y	3	STREET LIGHTING	PHYLLIS AVENUE	GRIMSBY	525921.66	409040.86	1978		55424	1 Urbis LED	Axia 16 LED 500mA	28 Watts	6.00 Metres	Galvanised Steel	
Y	4	STREET LIGHTING	PHYLLIS AVENUE	GRIMSBY	525947.11	409066.62	2015		55425	1 Urbis LED	Axia 16 LED 500mA	28 Watts	6.00 Metres	Galvanised Steel	
Y	5	STREET LIGHTING	PHYLLIS AVENUE	GRIMSBY	525970.9	409084.66	1978		55426	1 Urbis LED	Axia 16 LED 500mA	28 Watts	6.00 Metres	Galvanised Steel	
Y	6	STREET LIGHTING	PHYLLIS AVENUE	GRIMSBY	526018.37	409112.38	1978		55427	1 Urbis LED	Axia 16 LED 500mA	28 Watts	6.00 Metres	Galvanised Steel	
Y	1	STREET LIGHTING	ROSALIND AVENUE	GRIMSBY	525967.23	409015.73	1986		56253	1 Urbis LED	Axia 16 LED 500mA	28 Watts	6.00 Metres	Galvanised Steel	
Y	2	STREET LIGHTING	ROSALIND AVENUE	GRIMSBY	525945.21	409032.75	1986		56254	1 Urbis LED	Axia 16 LED 500mA	28 Watts	6.00 Metres	Galvanised Steel	
Y	3	STREET LIGHTING	ROSALIND AVENUE	GRIMSBY	525925.84	409072.12	1986		56255	1 Urbis LED	Axia 16 LED 500mA	28 Watts	6.00 Metres	Galvanised Steel	
Y	4	STREET LIGHTING	ROSALIND AVENUE	GRIMSBY	525893.31	409104.14	1986		56256	1 Urbis LED	Axia 16 LED 500mA	28 Watts	6.00 Metres	Galvanised Steel	
Y	5	STREET LIGHTING	ROSALIND AVENUE	GRIMSBY	525881.32	409136.3	2012		56257	1 Urbis LED	Axia 16 LED 500mA	28 Watts	6.00 Metres	Steel	
Y	1	STREET LIGHTING	SACKVILLE STREET	GRIMSBY	526144.37	409091.63	2010		56465	1 Urbis LED	Axia 16 LED 500mA	28 Watts	6.00 Metres	Steel	
Y	2	STREET LIGHTING	SACKVILLE STREET	GRIMSBY	526152.65	409074.62	2010		56466	1 Urbis LED	Axia 16 LED 500mA	28 Watts	6.00 Metres	Steel	
Y	3	STREET LIGHTING	SACKVILLE STREET	GRIMSBY	526188	409056	2001		56467	1 Urbis LED	Axia 16 LED 500mA	28 Watts	6.00 Metres	Galvanised Steel	
Y	1	STREET LIGHTING	ST ANNS AVENUE	GRIMSBY	525935.25	408950.44	2007		57594	Urbis	Axia 16 LED 350mA	19 Watts	6.00 Metres	Galvanised Steel	
Y	2	STREET LIGHTING	ST ANNS AVENUE	GRIMSBY	525955.76	408928.6	1993		57595	Urbis	Axia 16 LED 350mA	19 Watts	5.00 Metres	Galvanised Steel	
Y	3	STREET LIGHTING	ST ANNS AVENUE	GRIMSBY	525968.67	408916.13	1993		57596	Urbis	Axia 16 LED 350mA	19 Watts	5.00 Metres	Galvanised Steel	
Y	4	STREET LIGHTING	ST ANNS AVENUE	GRIMSBY	525996.64	408902.93	2019	14/06/2019	67380	Urbis	Axia 16 LED 500mA	28 Watts	6.00 Metres	Galvanised Steel	
Y	5	STREET LIGHTING	ST ANNS AVENUE	GRIMSBY	526009.93	408877.63	1993		57598	Urbis	Axia 16 LED 350mA	19 Watts	5.00 Metres	Galvanised Steel	
Y	6	STREET LIGHTING	ST ANNS AVENUE	GRIMSBY	526038.34	408860.86	2017		57599	Urbis	Axia 16 LED 350mA	19 Watts	6.00 Metres	Galvanised Steel	
Y	1	STREET LIGHTING	ST HILDAS AVENUE	GRIMSBY	525996.2	408998.01	2000		57713	Urbis	Axia 16 LED 350mA	19 Watts	5.00 Metres	Steel	
Y	2	STREET LIGHTING	ST HILDAS AVENUE	GRIMSBY	526015.5	408976.89	2000		57714	Urbis	Axia 16 LED 350mA	19 Watts	5.00 Metres	Steel	
Y	3	STREET LIGHTING	ST HILDAS AVENUE	GRIMSBY	526031.21	408961.15	2000		57715	Urbis	Axia 16 LED 350mA	19 Watts	5.00 Metres	Steel	
Y	4	STREET LIGHTING	ST HILDAS AVENUE	GRIMSBY	526051.75	408931.41	2000		57716	Urbis	Axia 16 LED 350mA	19 Watts	5.00 Metres	Steel	
Y	5	STREET LIGHTING	ST HILDAS AVENUE	GRIMSBY	526075.56	408922.82	2000		57717	Urbis	Axia 16 LED 350mA	19 Watts	5.00 Metres	Steel	
Y	6	STREET LIGHTING	ST HILDAS AVENUE	GRIMSBY	526093.18	408905.56	2000		57718	Urbis	Axia 16 LED 350mA	19 Watts	5.00 Metres	Steel	
Y	1	STREET LIGHTING	SALSBURY AVENUE	GRIMSBY	525672.7	408886.05	2017	30/09/2017	56500	Urbis	Axia 16 LED 350mA	19 Watts	6.00 Metres	Galvanised Steel	
Y	2	STREET LIGHTING	SALSBURY AVENUE	GRIMSBY	525676.5	408848.84	2017	30/09/2017	56501	Urbis	Axia 16 LED 350mA	19 Watts	6.00 Metres	Galvanised Steel	
Y	3	STREET LIGHTING	SALSBURY AVENUE	GRIMSBY	525668.77	408819.79	2017	30/09/2017	56502	Urbis	Axia 16 LED 350mA	19 Watts	6.00 Metres	Galvanised Steel	
Y	4	STREET LIGHTING	SALSBURY AVENUE	GRIMSBY	525662.32	408781.56	2017	30/09/2017	56503	Urbis	Axia 16 LED 350mA	19 Watts	6.00 Metres	Galvanised Steel	
Y	1	STREET LIGHTING	SHAFTESBURY AVENUE	GRIMSBY	525629.15	409089.02	2013		57083	1 Urbis LED	Teceo 32 LED 500mA	52 Watts	6.00 Metres	Galvanised Steel	
Y	2	STREET LIGHTING	SHAFTESBURY AVENUE	GRIMSBY	525669.91	409070.16	1994		57084	1 Urbis LED	Teceo 32 LED 500mA	52 Watts	6.00 Metres	Galvanised Steel	
Y	3	STREET LIGHTING	SHAFTESBURY AVENUE	GRIMSBY	525700.8	409036.36	1994		57085	1 Urbis LED	Teceo 32 LED 500mA	52 Watts	6.00 Metres	Galvanised Steel	
Y	1	STREET LIGHTING	SIDNEY ROAD	GRIMSBY	525591.26	409192.36	1993		57186	Urbis	Axia 16 LED 350mA	19 Watts	6.00 Metres	Galvanised Steel	
Y	2	STREET LIGHTING	SIDNEY ROAD	GRIMSBY	525601.89	409218.62	1993		57187	Urbis	Axia 16 LED 350mA	19 Watts	6.00 Metres	Galvanised Steel	
Y	3	STREET LIGHTING	SIDNEY ROAD	GRIMSBY	525625.69	409230.97	1993		57188	Urbis	Axia 16 LED 350mA	19 Watts	6.00 Metres	Galvanised Steel	
Y	4	STREET LIGHTING	SIDNEY ROAD	GRIMSBY	525637.46	409257.61	1993		57189	Urbis	Axia 16 LED 350mA	19 Watts	6.00 Metres	Galvanised Steel	
Y	1	STREET LIGHTING	TEWKESBURY DRIVE	GRIMSBY	526247.77	408687.92	2015	30/07/2015	66466	Urbis	Axia 16 LED 350mA	19 Watts	6.00 Metres	Galvanised Steel	
Y	2	STREET LIGHTING	TEWKESBURY DRIVE	GRIMSBY	526237.37	408717.42	2015	30/07/2015	58891	Urbis	Axia 16 LED 350mA	19 Watts	6.00 Metres	Galvanised Steel	
Y	3	STREET LIGHTING	TEWKESBURY DRIVE	GRIMSBY	526247.58	408744.08	2015	30/07/2015	66467	Urbis	Axia 16 LED 350mA	19 Watts	6.00 Metres	Galvanised Steel	
Y	1	STREET LIGHTING	UTTERBY DRIVE	GRIMSBY	526120.6	408491.67	2020	06/07/2020	67889	Urbis	Axia 16 LED 350mA	19 Watts	6.00 Metres	Galvanised Steel	
Y	2	STREET LIGHTING	UTTERBY DRIVE	GRIMSBY	526143.79	408502.35	2020	06/07/2020	68164	Urbis	Axia 16 LED 350mA	19 Watts	6.00 Metres	Galvanised Steel	
Y	3	STREET LIGHTING	UTTERBY DRIVE	GRIMSBY	526168.06	408497.95	2020	06/07/2020	68165	Urbis	Axia 16 LED 350mA	19 Watts	6.00 Metres	Galvanised Steel	
Y	4	STREET LIGHTING	UTTERBY DRIVE	GRIMSBY	526176.1	408469.78	2003		59519	Urbis	Axia 16 LED 350mA	19 Watts	5.00 Metres	Stainless Steel	

Y	5	STREET LIGHTING	UTTERBY DRIVE	GRIMSBY	526208.65	408469.6	2020	06/07/2020	68166	Urbis	Axia 16 LED 350mA	19 Watts	6.00 Metres	Galvanised Steel	
Y	6	STREET LIGHTING	UTTERBY DRIVE	GRIMSBY	526236.36	408481.59	2020	06/07/2020	68167	Urbis	Axia 16 LED 350mA	19 Watts	6.00 Metres	Galvanised Steel	
Y	1	STREET LIGHTING	WELLS STREET	GRIMSBY	525888.48	409264.23	1993		60261	1 Urbis LED	Axia 16 LED 500mA	28 Watts	6.00 Metres	Galvanised Steel	
Y	2	STREET LIGHTING	WELLS STREET	GRIMSBY	525898.22	409282.9	1993		60262	1 Urbis LED	Axia 16 LED 500mA	28 Watts	6.00 Metres	Galvanised Steel	
Y	3	STREET LIGHTING	WELLS STREET	GRIMSBY	525913.53	409315.8	1988		60263	1 Urbis LED	Axia 16 LED 500mA	28 Watts	6.00 Metres	Galvanised Steel	
Y	4	STREET LIGHTING	WELLS STREET	GRIMSBY	525921.51	409349.79	1988		60264	1 Urbis LED	Axia 16 LED 500mA	28 Watts	6.00 Metres	Galvanised Steel	
Y	5	STREET LIGHTING	WELLS STREET	GRIMSBY	525932.27	409372.96	1988		60265	1 Urbis LED	Axia 16 LED 500mA	28 Watts	5.00 Metres	Galvanised Steel	
Y	1	STREET LIGHTING	WENTWORTH ROAD	GRIMSBY	525836.14	409145.15	1978		60274	1 Urbis LED	Axia 16 LED 500mA	28 Watts	6.00 Metres	Galvanised Steel	
Y	2	STREET LIGHTING	WENTWORTH ROAD	GRIMSBY	525815.89	409156.48	1978		60275	1 Urbis LED	Axia 16 LED 500mA	28 Watts	6.00 Metres	Galvanised Steel	
Y	3	STREET LIGHTING	WENTWORTH ROAD	GRIMSBY	525779.52	409185.82	2019	03/10/2019	67632	Urbis	Axia 24 LED 500mA	28 Watts	6.00 Metres	Galvanised Steel	
Y	4	STREET LIGHTING	WENTWORTH ROAD	GRIMSBY	525731.09	409201.17	1978		60277	1 Urbis LED	Axia 16 LED 500mA	28 Watts	6.00 Metres	Galvanised Steel	
Y	1	STREET LIGHTING	WESTMINSTER DRIVE	GRIMSBY	526181.17	408923.91	1989		60554	1 Urbis LED	Axia 16 LED 500mA	28 Watts	6.00 Metres	Galvanised Steel	
Y	2	STREET LIGHTING	WESTMINSTER DRIVE	GRIMSBY	526153	408910	2001		60555	1 Urbis LED	Axia 16 LED 500mA	28 Watts	6.00 Metres	Galvanised Steel	
Y	3	STREET LIGHTING	WESTMINSTER DRIVE	GRIMSBY	526133	408891	2001		60556	1 Urbis LED	Axia 16 LED 500mA	28 Watts	6.00 Metres	Galvanised Steel	
Y	4	STREET LIGHTING	WESTMINSTER DRIVE	GRIMSBY	526122	408868	2012	14/03/2012	60557	1 Urbis LED	Axia 16 LED 500mA	28 Watts	6.00 Metres	Galvanised Steel	
Y	5	STREET LIGHTING	WESTMINSTER DRIVE	GRIMSBY	526089	408851	2001		60558	1 Urbis LED	Axia 16 LED 500mA	28 Watts	6.00 Metres	Galvanised Steel	
Y	6	STREET LIGHTING	WESTMINSTER DRIVE	GRIMSBY	526073	408824	2001		60559	1 Urbis LED	Axia 16 LED 500mA	28 Watts	6.00 Metres	Galvanised Steel	
Y	7	STREET LIGHTING	WESTMINSTER DRIVE	GRIMSBY	526029.45	408796.31	2012		60560	1 Urbis LED	Axia 16 LED 500mA	28 Watts	6.00 Metres	Steel	
Y	8	STREET LIGHTING	WESTMINSTER DRIVE	GRIMSBY	526005.9	408774.57	2012		60561	1 Urbis LED	Axia 16 LED 500mA	28 Watts	6.00 Metres	Steel	
Y	9	STREET LIGHTING	WESTMINSTER DRIVE	GRIMSBY	525998.53	408738.69	1989		60562	1 Urbis LED	Axia 16 LED 500mA	28 Watts	5.00 Metres	Galvanised Steel	
Y	1	STREET LIGHTING	WINSTON AVENUE	GRIMSBY	525600.36	408922.7	2015	30/07/2015	60964	1 Urbis LED	Axia 16 LED 500mA	28 Watts	6.00 Metres	Galvanised Steel	
Y	2	STREET LIGHTING	WINSTON AVENUE	GRIMSBY	525632.01	408943.15	2015	30/07/2015	60965	1 Urbis LED	Axia 16 LED 500mA	28 Watts	6.00 Metres	Galvanised Steel	
Y	3	STREET LIGHTING	WINSTON AVENUE	GRIMSBY	525609.48	408956.63	2015	30/07/2015	60966	1 Urbis LED	Axia 16 LED 500mA	28 Watts	6.00 Metres	Galvanised Steel	
Y	1	STREET LIGHTING	WIMBORN AVENUE	GRIMSBY	525569.73	408950.87	2015	30/07/2015	60784	Urbis	Axia 16 LED 350mA	19 Watts	6.00 Metres	Galvanised Steel	
Y	2	STREET LIGHTING	WIMBORN AVENUE	GRIMSBY	525544.67	408954.35	2015	30/07/2015	60785	Urbis	Axia 16 LED 350mA	19 Watts	6.00 Metres	Galvanised Steel	
Y	3	STREET LIGHTING	WIMBORN AVENUE	GRIMSBY	525547.2	408987.45	2015	30/07/2015	60786	Urbis	Axia 16 LED 350mA	19 Watts	6.00 Metres	Galvanised Steel	
Y	4	STREET LIGHTING	WIMBORN AVENUE	GRIMSBY	525569.61	408999.16	2015	30/07/2015	60787	Urbis	Axia 16 LED 350mA	19 Watts	6.00 Metres	Galvanised Steel	
Y	5	STREET LIGHTING	WIMBORN AVENUE	GRIMSBY	525607.58	408999.35	2015	30/07/2015	60788	Urbis	Axia 16 LED 350mA	19 Watts	6.00 Metres	Galvanised Steel	
Y	6	STREET LIGHTING	WIMBORN AVENUE	GRIMSBY	525644.92	409000.37	2015	30/07/2015	60789	Urbis	Axia 16 LED 350mA	19 Watts	6.00 Metres	Galvanised Steel	
Y	7	STREET LIGHTING	WIMBORN AVENUE	GRIMSBY	525667.83	409001	2015	30/07/2015	60790	Urbis	Axia 16 LED 350mA	19 Watts	6.00 Metres	Galvanised Steel	
Y	8	STREET LIGHTING	WIMBORN AVENUE	GRIMSBY	525699.1	408986.06	2015	30/07/2015	60791	Urbis	Axia 16 LED 350mA	19 Watts	6.00 Metres	Galvanised Steel	
Y	1	STREET LIGHTING	MALMESBURY DRIVE	GRIMSBY	526195.3	408754.78	1999		53120	Urbis	Axia 16 LED 350mA	19 Watts	5.00 Metres	Steel	
Y	2	STREET LIGHTING	MALMESBURY DRIVE	GRIMSBY	526177.81	408733.06	1999		53121	Urbis	Axia 16 LED 350mA	19 Watts	5.00 Metres	Steel	
Y	1	STREET LIGHTING	AUGUSTA STREET	GRIMSBY	526449.95	408679.29	2002		43488	1 Urbis LED	Axia 16 LED 500mA	28 Watts	6.00 Metres	Stainless Steel	
Y	2	STREET LIGHTING	AUGUSTA STREET	GRIMSBY	526415.27	408676.38	2002		43489	1 Urbis LED	Axia 16 LED 500mA	28 Watts	6.00 Metres	Stainless Steel	
Y	3	STREET LIGHTING	AUGUSTA STREET	GRIMSBY	526380.83	408675.01	2002		43490	1 Urbis LED	Axia 16 LED 500mA	28 Watts	6.00 Metres	Stainless Steel	
Y	4	STREET LIGHTING	AUGUSTA STREET	GRIMSBY	526349.56	408683.55	2002		43491	1 Urbis LED	Axia 16 LED 500mA	28 Watts	6.00 Metres	Stainless Steel	
Y	5	STREET LIGHTING	AUGUSTA STREET	GRIMSBY	526314.72	408680.53	2002		43492	1 Urbis LED	Axia 16 LED 500mA	28 Watts	6.00 Metres	Galvanised Steel	
Y	6	STREET LIGHTING	AUGUSTA STREET	GRIMSBY	526277.33	408668.06	2001		43493	1 Urbis LED	Axia 16 LED 500mA	28 Watts	6.00 Metres	Galvanised Steel	
Y	7	STREET LIGHTING	AUGUSTA STREET	GRIMSBY	526244.25	408665.16	2001		43494	1 Urbis LED	Axia 16 LED 500mA	28 Watts	6.00 Metres	Galvanised Steel	
Y	8	STREET LIGHTING	AUGUSTA STREET	GRIMSBY	526212.76	408663.09	2001		43495	1 Urbis LED	Axia 16 LED 500mA	28 Watts	6.00 Metres	Galvanised Steel	
Y	9	STREET LIGHTING	AUGUSTA STREET	GRIMSBY	526197.19	408662.15	2002		43496	1 Urbis LED	Axia 16 LED 500mA	28 Watts	6.00 Metres	Stainless Steel	
Y	10	STREET LIGHTING	AUGUSTA STREET	GRIMSBY	526162.9	408660.57	2002		43497	1 Urbis LED	Axia 16 LED 500mA	28 Watts	6.00 Metres	Stainless Steel	
Y	11	STREET LIGHTING	AUGUSTA STREET	GRIMSBY	526128.19	408658.59	2002		43498	1 Urbis LED	Axia 16 LED 500mA	28 Watts	6.00 Metres	Stainless Steel	
Y	12	STREET LIGHTING	AUGUSTA STREET	GRIMSBY	526108.15	408645.74	2002		43499	1 Urbis LED	Axia 16 LED 500mA	28 Watts	6.00 Metres	Stainless Steel	
Y	13	STREET LIGHTING	AUGUSTA STREET	GRIMSBY	526081.91	408661.94	2002		43500	1 Urbis LED	Axia 16 LED 500mA	28 Watts	6.00 Metres	Stainless Steel	
Y	14	STREET LIGHTING	AUGUSTA STREET	GRIMSBY	526054.56	408661.64	2002		43501	1 Urbis LED	Axia 16 LED 500mA	28 Watts	6.00 Metres	Stainless Steel	
Y	15	STREET LIGHTING	AUGUSTA STREET	GRIMSBY	526028.79	408677.18	2002		43502	1 Urbis LED	Axia 16 LED 500mA	28 Watts	6.00 Metres	Stainless Steel	
Y	16	STREET LIGHTING	AUGUSTA STREET	GRIMSBY	526000.18	408707.24	2002		43503	Urbis	Axia 16 LED 350mA	19 Watts	6.00 Metres	Stainless Steel	
Y	17	STREET LIGHTING	AUGUSTA STREET	GRIMSBY	525978.34	408714.26	2002		43504	Urbis	Axia 16 LED 350mA	19 Watts	6.00 Metres	Stainless Steel	
Y	18	STREET LIGHTING	AUGUSTA STREET	GRIMSBY	525988.38	408688.6	2020	06/10/2020	68106	Urbis	Axia 24 LED 500mA	28 Watts	6.00 Metres	Galvanised Steel	
Y	19	STREET LIGHTING	AUGUSTA STREET	GRIMSBY	525986.56	408663.02	2002		43506	Urbis	Axia 16 LED 350mA	19 Watts	6.00 Metres	Stainless Steel	
Y	20	STREET LIGHTING	AUGUSTA STREET	GRIMSBY	526015.16	408641.27	2002		43507	Urbis	Axia 16 LED 350mA	19 Watts	6.00 Metres	Stainless Steel	
Y	21	STREET LIGHTING	AUGUSTA STREET	GRIMSBY	526044.55	408630.6	2002		43508	Urbis	Axia 16 LED 350mA	19 Watts	6.00 Metres	Stainless Steel	
Y	22	STREET LIGHTING	AUGUSTA STREET	GRIMSBY	526074.04	408636.56	2002		43509	Urbis	Axia 16 LED 350mA	19 Watts	6.00 Metres	Stainless Steel	
Y	1	STREET LIGHTING	EATON COURT	GRIMSBY	526303.57	408658.03	1987		47783	Urbis	Axia 16 LED 350mA	19 Watts	6.00 Metres	Galvanised Steel	
Y	2	STREET LIGHTING	EATON COURT	GRIMSBY	526318.85	408633.54	1987		47784	Urbis	Axia 16 LED 350mA	19 Watts	6.00 Metres	Galvanised Steel	
Y	3	STREET LIGHTING	EATON COURT	GRIMSBY	526323.45	408608.04	1987		47785	Urbis	Axia 16 LED 350mA	19 Watts	6.00 Metres	Galvanised Steel	
Y	4	STREET LIGHTING	EATON COURT	GRIMSBY	526305.04	408578.68	1987		47786	Urbis	Axia 16 LED 350mA	19 Watts	6.00 Metres	Galvanised Steel	
Y	5	STREET LIGHTING	EATON COURT	GRIMSBY	526278.53	408576.65	1987		47787	Urbis	Axia 16 LED 350mA	19 Watts	6.00 Metres	Galvanised Steel	
Y	1	STREET LIGHTING	THE LAWNS	GRIMSBY	526281.98	408992.24	1989		58999	1 Urbis LED	Axia 16 LED 500mA	28 Watts	6.00 Metres	Galvanised Steel	
Y	2	STREET LIGHTING	THE LAWNS	GRIMSBY	526293.27	409015.4	1989		59000	1 Urbis LED	Axia 16 LED 500mA	28 Watts	6.00 Metres	Galvanised Steel	
Y	3	STREET LIGHTING	THE LAWNS	GRIMSBY	526275.09	409029.08	1989		59001	Urbis	Axia 8 LED 350mA	10 Watts	6.00 Metres	Galvanised Steel	
Y	1	STREET LIGHTING	LINCOLN BOULEVARD	GRIMSBY	525945.9	409344.33	2004		52556	Urbis	Axia 8 LED 350mA	10 Watts	6.00 Metres	Galvanised Steel	
Y	2	STREET LIGHTING	LINCOLN BOULEVARD	GRIMSBY	525970.41	409333.88	2004		52557	Urbis	Axia 8 LED 350mA	10 Watts	6.00 Metres	Galvanised Steel	
Y	3	STREET LIGHTING	LINCOLN BOULEVARD	GRIMSBY	525998.24	409319.43	2004		52558	Urbis	Axia 8 LED 350mA	10 Watts	6.00 Metres	Galvanised Steel	
Y	1	STREET LIGHTING	PRINCES AVENUE	GRIMSBY	526465.55	409107.2	1997		55619	Urbis	Axia 8 LED 350mA	10 Watts	5.00 Metres	Galvanised Steel	
Y	2	STREET LIGHTING	PRINCES AVENUE	GRIMSBY	526443.6	409113.51	1997		55620	Urbis	Axia 8 LED 350mA	10 Watts	5.00 Metres	Galvanised Steel	
Y	3	STREET LIGHTING	PRINCES AVENUE	GRIMSBY	526416.39	409123.45	1997		55621	Urbis	Axia 8 LED 350mA	10 Watts	5.00 Metres	Galvanised Steel	
Y	4	STREET LIGHTING	PRINCES AVENUE	GRIMSBY	526390.18	409135.47	1997		55622	Urbis	Axia 8 LED 350mA	10 Watts	5.00 Metres	Galvanised Steel	
Y	5	STREET LIGHTING	PRINCES AVENUE	GRIMSBY	526372.84	409146.36	1997		55623	Urbis	Axia 8 LED 350mA	10 Watts	5.00 Metres	Galvanised Steel	
Y	6	STREET LIGHTING	PRINCES AVENUE	GRIMSBY	526350.94	409157.88	1997		55624	Urbis	Axia 8 LED 350mA	10 Watts	5.00 Metres	Galvanised Steel	
Y	7	STREET LIGHTING	PRINCES AVENUE	GRIMSBY	526332.84	409167.06	1997		55625	Urbis	Axia 8 LED 350mA	10 Watts	5.00 Metres	Galvanised Steel	
Y	8	STREET LIGHTING	PRINCES AVENUE	GRIMSBY	526308.67	409180.03	1997		55626	Urbis	Axia 8 LED 350mA	10 Watts	5.00 Metres	Galvanised Steel	
Y	9	STREET LIGHTING	PRINCES AVENUE	GRIMSBY	526284.87	409191.68	1997		55627	Urbis	Axia 8 LED 350mA	10 Watts	5.00 Metres	Galvanised Steel	
Y	1	STREET LIGHTING	PRINCES AVENUE ACCESS ROAD	GRIMSBY	526457.42	409060.74	2004		55628	Urbis	Axia 16 LED 350mA	19 Watts	6.00 Metres	Stainless Steel	
Y	2	STREET LIGHTING	PRINCES AVENUE ACCESS ROAD	GRIMSBY	526418.67	409080.79	2004		55629	Urbis	Axia 16 LED 350mA	19 Watts	6.00 Metres	Stainless Steel	
Y	3	STREET LIGHTING	PRINCES AVENUE ACCESS ROAD	GRIMSBY	526390.35	409096.89	2004		55630	Urbis	Axia 16 LED 350mA	19 Watts	6.00 Metres	Stainless Steel	
Y	4	STREET LIGHTING	PRINCES AVENUE ACCESS ROAD	GRIMSBY	526345.57	409120.54	2004		55631	Urbis	Axia 16 LED 350mA	19 Watts	6.00 Metres	Stainless Steel	
Y	5	STREET LIGHTING	PRINCES AVENUE ACCESS ROAD	GRIMSBY	526310.1	409139.64	2004		55632	Urbis	Axia 16 LED 350mA	19 Watts	6.00 Metres	Stainless Steel	
Y	6	STREET LIGHTING	PRINCES AVENUE ACCESS ROAD	GRIMSBY	526276.8	409157.83	2004		55633	Urbis	Axia 16 LED 350mA	19 Watts	6.00 Metres	Stainless Steel	
Y	7	STREET LIGHTING	PRINCES AVENUE ACCESS ROAD	GRIMSBY	526251.22	409171.69	2004		55634	Urbis	Axia 16 LED 350mA	19 Watts	6.00 Metres	Stainless Steel	
Y	1	STREET LIGHTING	AUGUSTA OAKS	GRIMSBY	526189.58	408647	1992		61447	Urbis	Axia 16 LED 350mA	19 Watts	5.00 Metres	Galvanised Steel	
Y	2	STREET LIGHTING	AUGUSTA OAKS	GRIMSBY	526181.66	408625.73	1992		61980	Urbis	Axia 16 LED 350mA	19 Watts	5.00 Metres	Galvanised Steel	
Y	3	STREET LIGHTING	AUGUSTA OAKS	GRIMSBY	526185.9	408602.63	1992		61981	Urbis	Axia 16 LED 350mA	19 Watts	5.00 Metres	Galvanised Steel	
Y	4	STREET LIGHTING	AUGUSTA OAKS	GRIMSBY	526200.63	408593.79	1992		61982	Urbis	Axia 16 LED 350mA	19 Watts	5.00 Metres	Galvanised Steel	
Y	5	STREET LIGHTING	AUGUSTA OAKS	GRIMSBY	526211.3	408581.82	1992		61451	Urbis	Axia 16 LED 350mA	19 Watts	5.00 Metres	Galvanised Steel	
Y	6	STREET LIGHTING	AUGUSTA OAKS	GRIMSBY	526207.81	408567.37	1992		61984	Urbis	Axia 16 LED 350mA	19 Watts	5.00 Metres	Galvanised Steel	
Y	7	STREET LIGHTING	AUGUSTA OAKS	GRIMSBY	526231	408567.55	1992		61453	Urbis	Axia 16 LED 350mA	19 Watts	5.00 Metres	Galvanised Steel	
Y	1	STREET LIGHTING	LITTLEFIELD LANE	GRIMSBY	526378.88	409284.92	1990		52681	1 Urbis LED	Teceo 40 LED 500mA	64 Watts	8.00 Metres	Galvanised Steel	
Y	2	STREET LIGHTING	LITTLEFIELD LANE	GRIMSBY	526359.26	409261.56	1990		52682	1 Urbis LED	Teceo 40 LED 500mA	64 Watts	8.00 Metres	Galvanised Steel	
Y	3	STREET LIGHTING	LITTLEFIELD LANE	GRIMSBY	526321.42	409246.06	1990		52683	1 Urbis LED	Teceo 40 LED 500mA	64 Watts	8.00 Metres	Galvanised Steel	
Y	4	STREET LIGHTING	LITTLEFIELD LANE	GRIMSBY	526299.14	409217.51	1990		52684	1 Urbis LED	Teceo 40 LED 500mA	64 Watts	8.00 Metres	Galvanised Steel	
Y	5	STREET LIGHTING	LITTLEFIELD LANE	GRIMSBY	526267.37	409207.48	1990		52685	1 Urbis LED	Teceo 40 LED 500mA	64 Watts	8.00 Metres	Galvanised Steel	
Y	6	STREET LIGHTING	LITTLEFIELD LANE	GRIMSBY	526263.95	409192.54	1990		52686	1 Urbis LED	Teceo 40 LED 500mA	64 Watts	8.00 Metres	Galvanised Steel	
Y	7	STREET LIGHTING	LITTLEFIELD LANE	GRIMSBY	526230.67	409181	2002		52687	1 Urbis LED	Teceo 40 LED 500mA	64 Watts	8.00 Metres	Stainless Steel	
Y	8	STREET LIGHTING	LITTLEFIELD LANE	GRIMSBY	526216.99	409159.13	1990		52688	1 Urbis LED	Teceo 40 LED 500mA	64 Watts	8.00 Metres	Galvanised Steel	
Y	10	STREET LIGHTING	LITTLEFIELD LANE	GRIMSBY	526183.89	409135.76	2019	28/08/2019	52690	Urbis	Teceo 48 LED 700mA	104 Watts	10.00 Metres	Galvanised Steel	
Y	11	STREET LIGHTING	LITTLEFIELD LANE	GRIMSBY	526153.32	409125.15	2017		52691	1 Urbis LED	Teceo 40 LED 500mA	64 Watts	8.00 Metres	Galvanised Steel	
Y	12	STREET LIGHTING	LITTLEFIELD LANE	GRIMSBY	526137.88	409102.93	1997		52692	1 Urbis LED	Teceo 40 LED 500mA	64 Watts	8.00 Metres	Galvanised Steel	
Y	13	STREET LIGHTING	LITTLEFIELD LANE	GRIMSBY	526116.86	409099.35	2017		52693	1 Urbis LED	Teceo 40 LED 500mA	64 Watts	8.00 Metres	Galvanised Steel	
Y	14	STREET LIGHTING	LITTLEFIELD LANE	GRIMSBY	526096.73	409075.62	2017		52694	1 Urbis LED	Teceo 40 LED 500mA	64 Watts	8.00 Metres	Galvanised Steel	
Y	15	STREET LIGHTING	LITTLEFIELD LANE	GRIMSBY	526076.45	409059.97	2006		52695	1 Urbis LED	Teceo 40 LED 500mA	64 Watts	8.00 Metres	Stainless Steel	
Y	16	STREET LIGHTING	LITTLEFIELD LANE	GRIMSBY	526041.01	409046.26	2017		52696	1 Urbis LED	Teceo 40 LED 500mA	64 Watts	8.00 Metres	Galvanised Steel	
Y	17	STREET LIGHTING	LITTLEFIELD LANE	GRIMSBY	526020.76	409020.25	2017		52697	1 Urbis LED	Teceo 40 LED 500mA	64 Watts	8.00 Metres	Galvanised Steel	
Y	18	STREET LIGHTING	LITTLEFIELD LANE	GRIMSBY	525989.37	409009.68	2004		52698	1 Urbis LED	Teceo 40 LED 500mA	64 Watts	8.00 Metres	Galvanised Steel	
Y	19	STREET LIGHTING	LITTLEFIELD LANE	GRIMSBY	525976.77	408987.01	1990		52699	1 Urbis LED	Teceo 40 LED 500mA	64 Watts	8.00 Metres	Galvanised Steel	
Y	20	STREET LIGHTING	LITTLEFIELD LANE	GRIMSBY	525948.2	408970.05	2006		52700	1 Urbis LED	Teceo 40 LED 500mA	64 Watts	10.00 Metres	Stainless Steel	
Y	21	STREET LIGHTING	LITTLEFIELD LANE	GRIMSBY	525916.98	408948.39	2006		52701	1 Urbis LED	Teceo 40 LED 500mA	64 Watts	10.00 Metres	Stainless Steel	
Y	22	STREET LIGHTING	LITTLEFIELD LANE	GRIMSBY	525894.49	408930.81	2017		52702	1 Urbis LED	Teceo 40 LED 500mA	64 Watts	8.00 Metres	Galvanised Steel	

Y	23	STREET LIGHTING	LITTLEFIELD LANE	GRIMSBY	525868.8	408914.42	2006		52703	1 Urbis LED	Teceo 40 LED 500mA	64 Watts	10.00 Metres	Stainless Steel	
Y	24	STREET LIGHTING	LITTLEFIELD LANE	GRIMSBY	525855.95	408904.55	2006		52704	1 Urbis LED	Teceo 40 LED 500mA	64 Watts	10.00 Metres	Stainless Steel	
Y	25	STREET LIGHTING	LITTLEFIELD LANE	GRIMSBY	525819.79	408900.32	2006		52705	1 Urbis LED	Teceo 40 LED 500mA	64 Watts	8.00 Metres	Stainless Steel	
Y	26	STREET LIGHTING	LITTLEFIELD LANE	GRIMSBY	525786.07	408908.48	2017		52706	1 Urbis LED	Teceo 40 LED 500mA	64 Watts	8.00 Metres	Galvanised Steel	
Y	27	STREET LIGHTING	LITTLEFIELD LANE	GRIMSBY	525753.98	408898.47	2006		52707	1 Urbis LED	Teceo 40 LED 500mA	64 Watts	8.00 Metres	Stainless Steel	
Y	28	STREET LIGHTING	LITTLEFIELD LANE	GRIMSBY	525718.82	408908.2	2006		52708	1 Urbis LED	Teceo 40 LED 500mA	64 Watts	8.00 Metres	Stainless Steel	
Y	29	STREET LIGHTING	LITTLEFIELD LANE	GRIMSBY	525691.69	408907.03	2006		52709	1 Urbis LED	Teceo 40 LED 500mA	64 Watts	8.00 Metres	Stainless Steel	
Y	30	STREET LIGHTING	LITTLEFIELD LANE	GRIMSBY	525656.9	408897.67	2006		52710	1 Urbis LED	Teceo 40 LED 500mA	64 Watts	10.00 Metres	Stainless Steel	
Y	31	STREET LIGHTING	LITTLEFIELD LANE	GRIMSBY	525621.7	408895.34	2006		52711	1 Urbis LED	Teceo 40 LED 500mA	64 Watts	10.00 Metres	Stainless Steel	
Y	32	STREET LIGHTING	LITTLEFIELD LANE	GRIMSBY	525594.5	408905.78	2006		52712	1 Urbis LED	Teceo 40 LED 500mA	64 Watts	10.00 Metres	Stainless Steel	
Y	33	STREET LIGHTING	LITTLEFIELD LANE	GRIMSBY	525560.33	408895.5	2017		52713	1 Urbis LED	Teceo 40 LED 500mA	64 Watts	8.00 Metres	Galvanised Steel	
Y	34	STREET LIGHTING	LITTLEFIELD LANE	GRIMSBY	525527.57	408905.07	1996		52714	1 Urbis LED	Teceo 40 LED 500mA	64 Watts	8.00 Metres	Galvanised Steel	
Y	35	STREET LIGHTING	LITTLEFIELD LANE	GRIMSBY	525503.07	408892.39	2006		52715	1 Urbis LED	Teceo 40 LED 500mA	64 Watts	10.00 Metres	Stainless Steel	
Y	36	STREET LIGHTING	LITTLEFIELD LANE	GRIMSBY	525474.81	408876.32	2008		52716	1 Urbis LED	Teceo 40 LED 500mA	64 Watts	8.00 Metres	Steel	
Y	37	STREET LIGHTING	LITTLEFIELD LANE	GRIMSBY	525465.37	408847.53	2017		52717	1 Urbis LED	Teceo 40 LED 500mA	64 Watts	8.00 Metres	Galvanised Steel	
Y	38	STREET LIGHTING	LITTLEFIELD LANE	GRIMSBY	525438.54	408826.7	1990		52718	1 Urbis LED	Teceo 40 LED 500mA	64 Watts	8.00 Metres	Galvanised Steel	
Y	39	STREET LIGHTING	LITTLEFIELD LANE	GRIMSBY	525426.97	408810.77	1956		52719	1 Urbis LED	Teceo 40 LED 500mA	64 Watts	8.00 Metres	Steel	
Y	40	STREET LIGHTING	LITTLEFIELD LANE	GRIMSBY	525417.98	408780.83	1990		52720	1 Urbis LED	Teceo 16 LED 500mA	28 Watts	5.00 Metres	Galvanised Steel	
Y	1	STREET LIGHTING	ST JAMES COURT	GRIMSBY	526198.62	408783.04	1987		57753	Urbis	Axia 16 LED 350mA	19 Watts	5.00 Metres	Galvanised Steel	
Y	2	STREET LIGHTING	ST JAMES COURT	GRIMSBY	526207.09	408804.58	1987		57754	Urbis	Axia 16 LED 350mA	19 Watts	5.00 Metres	Galvanised Steel	
Y	3	STREET LIGHTING	ST JAMES COURT	GRIMSBY	526227.53	408821.8	2016		57755	Urbis	Axia 16 LED 350mA	19 Watts	6.00 Metres	Galvanised Steel	
Y	4	STREET LIGHTING	ST JAMES COURT	GRIMSBY	526247.41	408809.46	1987		57756	Urbis	Axia 16 LED 350mA	19 Watts	5.00 Metres	Galvanised Steel	
Y	1	STREET LIGHTING	THE CLOSE	GRIMSBY	526123.94	409012.57	2015	15/12/2015	68487	Urbis	Axia 16 LED 350mA	19 Watts	6.00 Metres	Galvanised Steel	
Y	2	STREET LIGHTING	THE CLOSE	GRIMSBY	526139.97	409032.24	2015	15/12/2015	68488	Urbis	Axia 16 LED 350mA	19 Watts	6.00 Metres	Galvanised Steel	
Y	3	STREET LIGHTING	THE CLOSE	GRIMSBY	526237.49	408987.4	2018	21/02/2018	68491	Urbis	Axia 16 LED 350mA	19 Watts	6.00 Metres	Galvanised Steel	
Y	4	STREET LIGHTING	THE CLOSE	GRIMSBY	526200.56	409000.36	2015	15/12/2015	68489	Urbis	Axia 16 LED 350mA	19 Watts	6.00 Metres	Galvanised Steel	
Y	5	STREET LIGHTING	THE CLOSE	GRIMSBY	526240.25	408985.65	2015	15/12/2015	68490	Urbis	Axia 16 LED 350mA	19 Watts	6.00 Metres	Galvanised Steel	
Y	1	STREET LIGHTING	THE SPINNEY	GRIMSBY	526220.66	409045.09	1989		59049	Urbis	Axia 16 LED 350mA	19 Watts	6.00 Metres	Galvanised Steel	
Y	2	STREET LIGHTING	THE SPINNEY	GRIMSBY	526241.8	409055.03	1989		59050	Urbis	Axia 16 LED 350mA	19 Watts	6.00 Metres	Unknown	
Y	3	STREET LIGHTING	THE SPINNEY	GRIMSBY	526262.3	409052.18	1989		59051	Urbis	Axia 16 LED 350mA	19 Watts	6.00 Metres	Galvanised Steel	
Y	1	STREET LIGHTING	FOOTPATH FROM LITTLEFIELD LANE	GRIMSBY	525855.26	408900.64	1986		48807	Urbis	Axia 8 LED 350mA	10 Watts	6.00 Metres	Galvanised Steel	
Y	2	STREET LIGHTING	FOOTPATH FROM LITTLEFIELD LANE	GRIMSBY	525865.13	408870.89	2006		48808	Urbis	Axia 8 LED 350mA	10 Watts	6.00 Metres	Galvanised Steel	
Y	3	STREET LIGHTING	FOOTPATH FROM LITTLEFIELD LANE	GRIMSBY	525875.14	408842.45	1986		48809	Urbis	Axia 8 LED 350mA	10 Watts	6.00 Metres	Galvanised Steel	
Y	4	STREET LIGHTING	FOOTPATH FROM LITTLEFIELD LANE	GRIMSBY	525890.07	408843.69	1986		48810	Urbis	Axia 8 LED 350mA	10 Watts	6.00 Metres	Galvanised Steel	
Y	5	STREET LIGHTING	FOOTPATH FROM LITTLEFIELD LANE	GRIMSBY	525909.06	408818.5	1986		48811	Urbis	Axia 8 LED 350mA	10 Watts	6.00 Metres	Galvanised Steel	
Y	6	STREET LIGHTING	FOOTPATH FROM LITTLEFIELD LANE	GRIMSBY	525924.25	408803.12	1986		48812	Urbis	Axia 8 LED 350mA	10 Watts	6.00 Metres	Galvanised Steel	
Y	7	STREET LIGHTING	FOOTPATH FROM LITTLEFIELD LANE	GRIMSBY	525943.87	408783.56	1986		48813	Urbis	Axia 8 LED 350mA	10 Watts	6.00 Metres	Galvanised Steel	
Y	8	STREET LIGHTING	FOOTPATH FROM LITTLEFIELD LANE	GRIMSBY	525962.84	408770.43	1986		48814	Urbis	Axia 8 LED 350mA	10 Watts	6.00 Metres	Galvanised Steel	
Y	1	STREET LIGHTING	CHESTNUT AVENUE	GRIMSBY	525895.98	409391.13	2001		45843	1 Urbis LED	Teceo 16 LED 500mA	28 Watts	6.00 Metres	Galvanised Steel	
Y	1	STREET LIGHTING	CROMWELL AVENUE	GRIMSBY	526251.79	409206.06	1994		46928	Urbis	Axia 16 LED 350mA	19 Watts	5.00 Metres	Galvanised Steel	
Y	2	STREET LIGHTING	CROMWELL AVENUE	GRIMSBY	526221.54	409222.36	1994		46929	Urbis	Axia 16 LED 350mA	19 Watts	5.00 Metres	Galvanised Steel	
Y	3	STREET LIGHTING	CROMWELL AVENUE	GRIMSBY	526196.35	409235.96	1994		46930	Urbis	Axia 16 LED 350mA	19 Watts	5.00 Metres	Galvanised Steel	
Y	4	STREET LIGHTING	CROMWELL AVENUE	GRIMSBY	526177.26	409239.14	1994		46931	Urbis	Axia 16 LED 350mA	19 Watts	5.00 Metres	Galvanised Steel	
Y	5	STREET LIGHTING	CROMWELL AVENUE	GRIMSBY	526168.78	409259.71	1994		46932	1 Urbis LED	Teceo 32 LED 500mA	52 Watts	5.00 Metres	Galvanised Steel	
Y	6	STREET LIGHTING	CROMWELL AVENUE	GRIMSBY	526157.52	409249.97	1994		46933	Urbis	Axia 16 LED 350mA	19 Watts	5.00 Metres	Galvanised Steel	
Y	7	STREET LIGHTING	CROMWELL AVENUE	GRIMSBY	526153.21	409242.18	1994		46934	Urbis	Axia 16 LED 350mA	19 Watts	5.00 Metres	Galvanised Steel	
Y	8	STREET LIGHTING	CROMWELL AVENUE	GRIMSBY	526135.11	409251.04	1994		46935	Urbis	Axia 16 LED 350mA	19 Watts	5.00 Metres	Galvanised Steel	
Y	9	STREET LIGHTING	CROMWELL AVENUE	GRIMSBY	526139.54	409259.52	1994		46936	Urbis	Axia 16 LED 350mA	19 Watts	5.00 Metres	Galvanised Steel	
Y	10	STREET LIGHTING	CROMWELL AVENUE	GRIMSBY	526140.25	409274.85	1994		46937	Urbis	Axia 16 LED 350mA	19 Watts	5.00 Metres	Galvanised Steel	
Y	11	STREET LIGHTING	CROMWELL AVENUE	GRIMSBY	526119.11	409270.3	1994		46938	Urbis	Axia 16 LED 350mA	19 Watts	5.00 Metres	Galvanised Steel	
Y	12	STREET LIGHTING	CROMWELL AVENUE	GRIMSBY	526109.49	409283.65	1994		46939	Urbis	Axia 16 LED 350mA	19 Watts	5.00 Metres	Galvanised Steel	
Y	13	STREET LIGHTING	CROMWELL AVENUE	GRIMSBY	526087.56	409290.3	2011		46940	Urbis	Axia 8 LED 350mA	10 Watts	6.00 Metres	Steel	
Y	14	STREET LIGHTING	CROMWELL AVENUE	GRIMSBY	526059.4	409306.65	2011		46941	Urbis	Axia 8 LED 350mA	10 Watts	6.00 Metres	Steel	
Y	15	STREET LIGHTING	CROMWELL AVENUE	GRIMSBY	526036.68	409316.77	2011		46942	Urbis	Axia 8 LED 350mA	10 Watts	6.00 Metres	Steel	
Y	1	STREET LIGHTING	VICARAGE GARDENS	GRIMSBY	526233.47	408908.05	1967		59545	Urbis	Axia 16 LED 350mA	19 Watts	5.00 Metres	Steel	
Y	2	STREET LIGHTING	VICARAGE GARDENS	GRIMSBY	526223.6	408884.7	1967		59546	Urbis	Axia 16 LED 350mA	19 Watts	5.00 Metres	Galvanised Steel	
Y	3	STREET LIGHTING	VICARAGE GARDENS	GRIMSBY	526232.43	408879.09	1967		59547	Urbis	Axia 16 LED 350mA	19 Watts	5.00 Metres	Steel	
Y	1	STREET LIGHTING	ABBEY DRIVE WEST	GRIMSBY	526803.35	408858.96	1993		42651	Urbis	Axia 16 LED 350mA	19 Watts	6.00 Metres	Galvanised Steel	
Y	2	STREET LIGHTING	ABBEY DRIVE WEST	GRIMSBY	526816.98	408837.6	1993		42652	Urbis	Axia 16 LED 350mA	19 Watts	6.00 Metres	Galvanised Steel	
Y	3	STREET LIGHTING	ABBEY DRIVE WEST	GRIMSBY	526830.23	408815.79	1993		42653	Urbis	Axia 16 LED 350mA	19 Watts	6.00 Metres	Galvanised Steel	
Y	4	STREET LIGHTING	ABBEY DRIVE WEST	GRIMSBY	526842.75	408795.81	1993		42654	Urbis	Axia 16 LED 350mA	19 Watts	6.00 Metres	Galvanised Steel	
Y	5	STREET LIGHTING	ABBEY DRIVE WEST	GRIMSBY	526853	408778	2001		42655	Urbis	Axia 16 LED 350mA	19 Watts	6.00 Metres	Galvanised Steel	
Y	6	STREET LIGHTING	ABBEY DRIVE WEST	GRIMSBY	526856	408753	2001		42656	Urbis	Axia 16 LED 350mA	19 Watts	6.00 Metres	Galvanised Steel	
Y	7	STREET LIGHTING	ABBEY DRIVE WEST	GRIMSBY	526866	408734	2001		42657	Urbis	Axia 16 LED 350mA	19 Watts	6.00 Metres	Galvanised Steel	
Y	8	STREET LIGHTING	ABBEY DRIVE WEST	GRIMSBY	526853.8	408709.18	1999		42658	Urbis	Axia 16 LED 350mA	19 Watts	6.00 Metres	Galvanised Steel	
Y	9	STREET LIGHTING	ABBEY DRIVE WEST	GRIMSBY	526822	408714	2001		42659	Urbis	Axia 16 LED 350mA	19 Watts	6.00 Metres	Galvanised Steel	
Y	10	STREET LIGHTING	ABBEY DRIVE WEST	GRIMSBY	526791.75	408692.34	1999		42660	Urbis	Axia 16 LED 350mA	19 Watts	6.00 Metres	Galvanised Steel	
Y	1	STREET LIGHTING	ABBEY PARK ROAD	GRIMSBY	526727.04	408812.56	1988		42661	Urbis	Axia 16 LED 350mA	19 Watts	6.00 Metres	Galvanised Steel	
Y	2	STREET LIGHTING	ABBEY PARK ROAD	GRIMSBY	526722.79	408782.05	1988		42662	Urbis	Axia 8 LED 350mA	10 Watts	6.00 Metres	Galvanised Steel	
Y	3	STREET LIGHTING	ABBEY PARK ROAD	GRIMSBY	526729.97	408755.63	1988		42663	Urbis	Axia 16 LED 350mA	19 Watts	6.00 Metres	Galvanised Steel	
Y	4	STREET LIGHTING	ABBEY PARK ROAD	GRIMSBY	526748.01	408734.18	1988		42664	Urbis	Axia 16 LED 350mA	19 Watts	6.00 Metres	Galvanised Steel	
Y	5	STREET LIGHTING	ABBEY PARK ROAD	GRIMSBY	526755.56	408705.92	1988		42665	Urbis	Axia 16 LED 350mA	19 Watts	6.00 Metres	Galvanised Steel	
Y	6	STREET LIGHTING	ABBEY PARK ROAD	GRIMSBY	526747.82	408688.89	1988		42666	Urbis	Axia 16 LED 350mA	19 Watts	6.00 Metres	Galvanised Steel	
Y	7	STREET LIGHTING	ABBEY PARK ROAD	GRIMSBY	526764.03	408674.16	1988		42667	Urbis	Axia 16 LED 350mA	19 Watts	6.00 Metres	Galvanised Steel	
Y	8	STREET LIGHTING	ABBEY PARK ROAD	GRIMSBY	526771.21	408647.37	1988		42668	Urbis	Axia 16 LED 350mA	19 Watts	6.00 Metres	Galvanised Steel	
Y	9	STREET LIGHTING	ABBEY PARK ROAD	GRIMSBY	526778.2	408622.43	1988		42669	Urbis	Axia 16 LED 350mA	19 Watts	6.00 Metres	Galvanised Steel	
Y	10	STREET LIGHTING	ABBEY PARK ROAD	GRIMSBY	526771.53	408605.04	2020	04/05/2020	67874	Urbis	Axia 16 LED 350mA	19 Watts	6.00 Metres	Galvanised Steel	
Y	11	STREET LIGHTING	ABBEY PARK ROAD	GRIMSBY	526789.62	408579.07	1988		42671	Urbis	Axia 16 LED 350mA	19 Watts	6.00 Metres	Galvanised Steel	
Y	12	STREET LIGHTING	ABBEY PARK ROAD	GRIMSBY	526785.57	408549.15	1988		42672	Urbis	Axia 16 LED 350mA	19 Watts	6.00 Metres	Galvanised Steel	
Y	13	STREET LIGHTING	ABBEY PARK ROAD	GRIMSBY	526805.45	408521.35	1988		42673	Urbis	Axia 16 LED 350mA	19 Watts	6.00 Metres	Galvanised Steel	
Y	14	STREET LIGHTING	ABBEY PARK ROAD	GRIMSBY	526798.64	408501.1	1988		42674	Urbis	Axia 16 LED 350mA	19 Watts	6.00 Metres	Galvanised Steel	
Y	1	STREET LIGHTING	ABBOTSWAY	GRIMSBY	526914.74	408788.41	1972		42699	Urbis	Axia 16 LED 350mA	19 Watts	5.00 Metres	Steel	
Y	2	STREET LIGHTING	ABBOTSWAY	GRIMSBY	526916.95	408756.46	1972		42700	Urbis	Axia 16 LED 350mA	19 Watts	6.00 Metres	Galvanised Steel	
Y	3	STREET LIGHTING	ABBOTSWAY	GRIMSBY	526930.32	408735.71	2019	03/10/2019	67614	Urbis	Axia 16 LED 350mA	19 Watts	6.00 Metres	Galvanised Steel	
Y	4	STREET LIGHTING	ABBOTSWAY	GRIMSBY	526921.11	408705.25	2003		42702	Urbis	Axia 16 LED 350mA	19 Watts	6.00 Metres	Stainless Steel	
Y	5	STREET LIGHTING	ABBOTSWAY	GRIMSBY	526895.78	408701.04	1972		42703	Urbis	Axia 16 LED 350mA	19 Watts	6.00 Metres	Galvanised Steel	
Y	6	STREET LIGHTING	ABBOTSWAY	GRIMSBY	526877.06	408720.91	2019	03/10/2019	67813	Urbis	Axia 16 LED 350mA	19 Watts	6.00 Metres	Galvanised Steel	
Y	1	STREET LIGHTING	AINSLIE STREET	GRIMSBY	526986.27	408953.36	1991		42775	1 Urbis LED	Teceo 40 LED 500mA	64 Watts	10.00 Metres	Galvanised Steel	
Y	2	STREET LIGHTING	AINSLIE STREET	GRIMSBY	526991.05	408934.95	1991		42776	1 Urbis LED	Teceo 40 LED 500mA	64 Watts	8.00 Metres	Galvanised Steel	
Y	3	STREET LIGHTING	AINSLIE STREET	GRIMSBY	527010.02	408910.56	1991		42777	1 Urbis LED	Teceo 40 LED 500mA	64 Watts	8.00 Metres	Galvanised Steel	
Y	4	STREET LIGHTING	AINSLIE STREET	GRIMSBY	527018.49	408880.09	1991		42778	1 Urbis LED	Teceo 40 LED 500mA	64 Watts	8.00 Metres	Galvanised Steel	
Y	5	STREET LIGHTING	AINSLIE STREET	GRIMSBY	527025.67	408854.4	1991		42779	1 Urbis LED	Teceo 40 LED 500mA	64 Watts	8.00 Metres	Galvanised Steel	
Y	6	STREET LIGHTING	AINSLIE STREET	GRIMSBY	527019.59	408831.3	1999		42780	1 Urbis LED	Teceo 40 LED 500mA	64 Watts	10.00 Metres	Galvanised Steel	
Y	7	STREET LIGHTING	AINSLIE STREET	GRIMSBY	527024.93	408811.69	1991		42781	1 Urbis LED	Teceo 40 LED 500mA	64 Watts	8.00 Metres	Galvanised Steel	
Y	8	STREET LIGHTING	AINSLIE STREET	GRIMSBY	527030.45	408790.33	1999		42782	1 Urbis LED	Teceo 40 LED 500mA	64 Watts	10.00 Metres	Galvanised Steel	
Y	9	STREET LIGHTING	AINSLIE STREET	GRIMSBY	527039.47	408757.1	1991		42783	1 Urbis LED	Teceo 40 LED 500mA	64 Watts	8.00 Metres	Galvanised Steel	
Y	10	STREET LIGHTING	AINSLIE STREET	GRIMSBY	527048.68	408722.95	1991		42784	1 Urbis LED	Teceo 40 LED 500mA	64 Watts	8.00 Metres	Galvanised Steel	
Y	11	STREET LIGHTING	AINSLIE STREET	GRIMSBY	527056.6	408693.21	1991		42785	1 Urbis LED	Teceo 40 LED 500mA	64 Watts	8.00 Metres	Galvanised Steel	
Y	12	STREET LIGHTING	AINSLIE STREET	GRIMSBY	527065.59	408660.38	1991		42786	1 Urbis LED	Teceo 40 LED 500mA	64 Watts	8.00 Metres	Galvanised Steel	
Y	13	STREET LIGHTING	AINSLIE STREET	GRIMSBY	527073.14	408632.4	1991		42787	1 Urbis LED	Teceo 40 LED 500mA	64 Watts	8.00 Metres	Galvanised Steel	
Y	14	STREET LIGHTING	AINSLIE STREET	GRIMSBY	527080.51	408604.69	1991		42788	1 Urbis LED	Teceo 40 LED 500mA	64 Watts	8.00 Metres	Galvanised Steel	
Y	15	STREET LIGHTING	AINSLIE STREET	GRIMSBY	527088.98	408574.03	1991		42789	1 Urbis LED	Teceo 40 LED 500mA	64 Watts	8.00 Metres	Galvanised Steel	
Y	1	STREET LIGHTING	BARGATE AVENUE	GRIMSBY	526565.94	408255.07	1963		43671	Urbis	Axia 16 LED 350mA	19 Watts	5.00 Metres	Steel	
Y	2	STREET LIGHTING	BARGATE AVENUE	GRIMSBY	526599.49	408250.06	1963		43672	Urbis	Axia 16 LED 350mA	19 Watts	5.00 Metres	Steel	
Y	3	STREET LIGHTING	BARGATE AVENUE	GRIMSBY	526646.22	408264.3	2018	14/08/2018	43673	Urbis	Axia 16 LED 350mA	19 Watts	6.00 Metres	Galvanised Steel	
Y	4	STREET LIGHTING	BARGATE AVENUE	GRIMSBY	526674.14	408258.38	2018	14/08/2018	43674	Urbis	Axia 16 LED 350mA	19 Watts	6.00 Metres	Galvanised Steel	
Y	5	STREET LIGHTING	BARGATE AVENUE	GRIMSBY	526700.61	408270.31	2012		43675	Urbis	Axia 16 LED 350mA	19 Watts	6.00 Metres	Steel	
Y	6	STREET LIGHTING	BARGATE AVENUE	GRIMSBY	526735.72	408274.12	2012		43676	Urbis	Axia 16 LED 350mA	19 Watts	6.00 Metres	Steel	
Y	7	STREET LIGHTING	BARGATE AVENUE	GRIMSBY	526763.46	408272.45	1991		43677	Urbis	Axia 16 LED 350mA	19 Watts	6.00 Metres	Galvanised Steel	
Y	1	STREET LIGHTING	FAREBROTHER STREET	GRIMSBY	527215.85	408804.34	1993		48382	1 Urbis LED	Axia 16 LED 500mA	28 Watts	6.00 Metres	Galvanised Steel	

Y	2	STREET LIGHTING	FAREBROTHER STREET	GRIMSBY	527212.13	408778.87	2021	25/01/2021	68237	Urbis	Axia 24 LED 500mA	28 Watts	6.00 Metres	Galvanised Steel	
Y	3	STREET LIGHTING	FAREBROTHER STREET	GRIMSBY	527226.9	408764.66	1993		48384	1 Urbis LED	Axia 16 LED 500mA	28 Watts	6.00 Metres	Galvanised Steel	
Y	4	STREET LIGHTING	FAREBROTHER STREET	GRIMSBY	527220.82	408742.29	1993		48385	1 Urbis LED	Axia 16 LED 500mA	28 Watts	6.00 Metres	Galvanised Steel	
Y	5	STREET LIGHTING	FAREBROTHER STREET	GRIMSBY	527239.42	408719.36	1993		48386	1 Urbis LED	Axia 16 LED 500mA	28 Watts	6.00 Metres	Galvanised Steel	
Y	6	STREET LIGHTING	FAREBROTHER STREET	GRIMSBY	527233.71	408693.5	1993		48387	1 Urbis LED	Axia 16 LED 500mA	28 Watts	6.00 Metres	Galvanised Steel	
Y	7	STREET LIGHTING	FAREBROTHER STREET	GRIMSBY	527251.57	408672.51	1993		48388	1 Urbis LED	Axia 16 LED 500mA	28 Watts	6.00 Metres	Galvanised Steel	
Y	8	STREET LIGHTING	FAREBROTHER STREET	GRIMSBY	527245.31	408651.79	1993		48389	1 Urbis LED	Axia 16 LED 500mA	28 Watts	6.00 Metres	Galvanised Steel	
Y	9	STREET LIGHTING	FAREBROTHER STREET	GRIMSBY	527250.65	408631.82	1993		48390	1 Urbis LED	Axia 16 LED 500mA	28 Watts	6.00 Metres	Galvanised Steel	
Y	10	STREET LIGHTING	FAREBROTHER STREET	GRIMSBY	527256.17	408612.21	1993		48391	1 Urbis LED	Axia 16 LED 500mA	28 Watts	6.00 Metres	Galvanised Steel	
Y	11	STREET LIGHTING	FAREBROTHER STREET	GRIMSBY	527274.59	408590.48	1997		48392	1 Urbis LED	Axia 16 LED 500mA	28 Watts	6.00 Metres	Galvanised Steel	
Y	12	STREET LIGHTING	FAREBROTHER STREET	GRIMSBY	527281.95	408563.97	1997		48393	1 Urbis LED	Axia 16 LED 500mA	28 Watts	6.00 Metres	Galvanised Steel	
Y	13	STREET LIGHTING	FAREBROTHER STREET	GRIMSBY	527279.74	408524.84	1997		48394	1 Urbis LED	Axia 16 LED 500mA	28 Watts	6.00 Metres	Galvanised Steel	
Y	14	STREET LIGHTING	FAREBROTHER STREET	GRIMSBY	527297.6	408506.71	1997		48395	1 Urbis LED	Axia 16 LED 500mA	28 Watts	6.00 Metres	Galvanised Steel	
Y	15	STREET LIGHTING	FAREBROTHER STREET	GRIMSBY	527293.92	408472.74	1997		48396	1 Urbis LED	Axia 16 LED 500mA	28 Watts	6.00 Metres	Galvanised Steel	
Y	16	STREET LIGHTING	FAREBROTHER STREET	GRIMSBY	527314.17	408455.98	1997		48397	1 Urbis LED	Axia 16 LED 500mA	28 Watts	6.00 Metres	Galvanised Steel	
Y	17	STREET LIGHTING	FAREBROTHER STREET	GRIMSBY	527308.28	408421.09	1997		48398	1 Urbis LED	Axia 16 LED 500mA	28 Watts	6.00 Metres	Galvanised Steel	
Y	18	STREET LIGHTING	FAREBROTHER STREET	GRIMSBY	527327.56	408396.89	1997		48399	1 Urbis LED	Axia 16 LED 500mA	28 Watts	6.00 Metres	Galvanised Steel	
Y	19	STREET LIGHTING	FAREBROTHER STREET	GRIMSBY	527324.25	408363.11	1997		48400	1 Urbis LED	Axia 16 LED 500mA	28 Watts	6.00 Metres	Galvanised Steel	
Y	20	STREET LIGHTING	FAREBROTHER STREET	GRIMSBY	527331.79	408335.86	1997		48401	1 Urbis LED	Axia 16 LED 500mA	28 Watts	6.00 Metres	Galvanised Steel	
Y	21	STREET LIGHTING	FAREBROTHER STREET	GRIMSBY	527339.53	408307.14	1997		48402	1 Urbis LED	Axia 16 LED 500mA	28 Watts	6.00 Metres	Galvanised Steel	
Y	22	STREET LIGHTING	FAREBROTHER STREET	GRIMSBY	527359.04	408281.73	1997		48403	1 Urbis LED	Axia 16 LED 500mA	28 Watts	6.00 Metres	Galvanised Steel	
Y	23	STREET LIGHTING	FAREBROTHER STREET	GRIMSBY	527365.67	408256.97	1997		48404	1 Urbis LED	Axia 16 LED 500mA	28 Watts	6.00 Metres	Galvanised Steel	
Y	24	STREET LIGHTING	FAREBROTHER STREET	GRIMSBY	527372.67	408230.54	1997		48405	1 Urbis LED	Axia 16 LED 500mA	28 Watts	6.00 Metres	Galvanised Steel	
Y	25	STREET LIGHTING	FAREBROTHER STREET	GRIMSBY	527368.62	408201.73	1997		48406	1 Urbis LED	Axia 16 LED 500mA	28 Watts	6.00 Metres	Galvanised Steel	
Y	26	STREET LIGHTING	FAREBROTHER STREET	GRIMSBY	527375.25	408178.63	1997		48407	1 Urbis LED	Axia 16 LED 500mA	28 Watts	6.00 Metres	Galvanised Steel	
Y	27	STREET LIGHTING	FAREBROTHER STREET	GRIMSBY	527393.29	408156.07	1997		48408	1 Urbis LED	Axia 16 LED 500mA	28 Watts	6.00 Metres	Galvanised Steel	
Y	28	STREET LIGHTING	FAREBROTHER STREET	GRIMSBY	527388.32	408131.49	1997		48409	1 Urbis LED	Axia 16 LED 500mA	28 Watts	6.00 Metres	Galvanised Steel	
Y	29	STREET LIGHTING	FAREBROTHER STREET	GRIMSBY	527407.03	408105.97	1997		48410	1 Urbis LED	Axia 16 LED 500mA	28 Watts	6.00 Metres	Galvanised Steel	
Y	30	STREET LIGHTING	FAREBROTHER STREET	GRIMSBY	527401.87	408081.57	1997		48411	1 Urbis LED	Axia 16 LED 500mA	28 Watts	6.00 Metres	Galvanised Steel	
Y	1	STREET LIGHTING	BRATTON COURT	GRIMSBY	527407.19	408140.55	2007		44576	Urbis	Axia 16 LED 350mA	19 Watts	5.00 Metres	Steel	
Y	2	STREET LIGHTING	BRATTON COURT	GRIMSBY	527429.9	408147.56	2007		44577	Urbis	Axia 16 LED 350mA	19 Watts	5.00 Metres	Steel	
Y	3	STREET LIGHTING	BRATTON COURT	GRIMSBY	527458.52	408158.47	2007		44578	Urbis	Axia 16 LED 350mA	19 Watts	5.00 Metres	Steel	
Y	4	STREET LIGHTING	BRATTON COURT	GRIMSBY	527436.39	408176.97	2007		44579	Urbis	Axia 16 LED 350mA	19 Watts	5.00 Metres	Steel	
Y	1	STREET LIGHTING	FLORENCE STREET	GRIMSBY	527353.12	408332.52	2007		48661	1 Urbis LED	Teceo 24 LED 500mA	40 Watts	6.00 Metres	Galvanised Steel	
Y	2	STREET LIGHTING	FLORENCE STREET	GRIMSBY	527378.24	408351.26	2007		48662	Urbis	Axia 16 LED 500mA	28 Watts	6.00 Metres	Galvanised Steel	
Y	3	STREET LIGHTING	FLORENCE STREET	GRIMSBY	527414.5	408349.46	2007		48663	1 Urbis LED	Teceo 24 LED 500mA	40 Watts	6.00 Metres	Galvanised Steel	
Y	4	STREET LIGHTING	FLORENCE STREET	GRIMSBY	527433.81	408369.07	1999		48664	1 Urbis LED	Teceo 24 LED 500mA	40 Watts	6.00 Metres	Galvanised Steel	
Y	1	STREET LIGHTING	GARNER STREET	GRIMSBY	527295.53	408537.51	1995		49093	Urbis	Axia 16 LED 350mA	19 Watts	6.00 Metres	Galvanised Steel	
Y	2	STREET LIGHTING	GARNER STREET	GRIMSBY	527322.04	408533.83	1995		49094	Urbis	Axia 16 LED 350mA	19 Watts	6.00 Metres	Galvanised Steel	
Y	3	STREET LIGHTING	GARNER STREET	GRIMSBY	527341	408550.21	1995		49095	Urbis	Axia 16 LED 350mA	19 Watts	6.00 Metres	Galvanised Steel	
Y	4	STREET LIGHTING	GARNER STREET	GRIMSBY	527367.15	408557.67	1995		49096	Urbis	Axia 16 LED 350mA	19 Watts	6.00 Metres	Galvanised Steel	
Y	5	STREET LIGHTING	GARNER STREET	GRIMSBY	527392.55	408553.25	1995		49097	Urbis	Axia 16 LED 350mA	19 Watts	6.00 Metres	Galvanised Steel	
Y	1	STREET LIGHTING	GERTRUDE STREET	GRIMSBY	527388.61	408197.83	1996		49199	Urbis	Axia 16 LED 350mA	19 Watts	6.00 Metres	Galvanised Steel	
Y	2	STREET LIGHTING	GERTRUDE STREET	GRIMSBY	527410.7	408214.95	1996		49200	Urbis	Axia 16 LED 350mA	19 Watts	6.00 Metres	Galvanised Steel	
Y	3	STREET LIGHTING	GERTRUDE STREET	GRIMSBY	527435.56	408210.16	1996		49201	Urbis	Axia 16 LED 350mA	19 Watts	6.00 Metres	Galvanised Steel	
Y	4	STREET LIGHTING	GERTRUDE STREET	GRIMSBY	527456.73	408227.38	1996		49202	Urbis	Axia 16 LED 350mA	19 Watts	6.00 Metres	Galvanised Steel	
Y	5	STREET LIGHTING	GERTRUDE STREET	GRIMSBY	527483.98	408223.33	1996		49203	Urbis	Axia 16 LED 350mA	19 Watts	6.00 Metres	Galvanised Steel	
Y	1	STREET LIGHTING	KETTLEWELL STREET	GRIMSBY	527314.21	408481.35	1980		51579	1 Urbis LED	Axia 16 LED 500mA	28 Watts	6.00 Metres	Galvanised Steel	
Y	2	STREET LIGHTING	KETTLEWELL STREET	GRIMSBY	527350.49	408480.25	1980		51580	1 Urbis LED	Axia 16 LED 500mA	28 Watts	6.00 Metres	Galvanised Steel	
Y	3	STREET LIGHTING	KETTLEWELL STREET	GRIMSBY	527374.24	408497.83	1980		51581	1 Urbis LED	Axia 16 LED 500mA	28 Watts	6.00 Metres	Galvanised Steel	
Y	4	STREET LIGHTING	KETTLEWELL STREET	GRIMSBY	527411.61	408496.73	1980		51582	1 Urbis LED	Axia 16 LED 500mA	28 Watts	6.00 Metres	Galvanised Steel	
Y	1	STREET LIGHTING	LAMBERT ROAD	GRIMSBY	526795.97	408606.11	1993		52197	1 Urbis LED	Axia 16 LED 500mA	28 Watts	6.00 Metres	Galvanised Steel	
Y	2	STREET LIGHTING	LAMBERT ROAD	GRIMSBY	526814.81	408623.54	1993		52198	1 Urbis LED	Axia 16 LED 500mA	28 Watts	6.00 Metres	Galvanised Steel	
Y	3	STREET LIGHTING	LAMBERT ROAD	GRIMSBY	526845.56	408619.67	1993		52199	1 Urbis LED	Axia 16 LED 500mA	28 Watts	6.00 Metres	Galvanised Steel	
Y	4	STREET LIGHTING	LAMBERT ROAD	GRIMSBY	526868.94	408638.08	1993		52200	1 Urbis LED	Axia 16 LED 500mA	28 Watts	6.00 Metres	Galvanised Steel	
Y	5	STREET LIGHTING	LAMBERT ROAD	GRIMSBY	526896.56	408633.39	1993		52201	1 Urbis LED	Axia 16 LED 500mA	28 Watts	6.00 Metres	Galvanised Steel	
Y	6	STREET LIGHTING	LAMBERT ROAD	GRIMSBY	526920.31	408639.74	1993		52202	1 Urbis LED	Axia 16 LED 500mA	28 Watts	6.00 Metres	Galvanised Steel	
Y	7	STREET LIGHTING	LAMBERT ROAD	GRIMSBY	526943.14	408658.34	1993		52203	1 Urbis LED	Axia 16 LED 500mA	28 Watts	6.00 Metres	Galvanised Steel	
Y	8	STREET LIGHTING	LAMBERT ROAD	GRIMSBY	526971.31	408665.61	1993		52204	1 Urbis LED	Axia 16 LED 500mA	28 Watts	6.00 Metres	Galvanised Steel	
Y	9	STREET LIGHTING	LAMBERT ROAD	GRIMSBY	526998.37	408660.82	1993		52205	1 Urbis LED	Axia 16 LED 500mA	28 Watts	6.00 Metres	Galvanised Steel	
Y	10	STREET LIGHTING	LAMBERT ROAD	GRIMSBY	527025.69	408668.4	1993		52206	1 Urbis LED	Axia 16 LED 500mA	28 Watts	6.00 Metres	Galvanised Steel	
Y	11	STREET LIGHTING	LAMBERT ROAD	GRIMSBY	527049.25	408686.62	1988		52207	1 Urbis LED	Axia 16 LED 500mA	28 Watts	6.00 Metres	Galvanised Steel	
Y	12	STREET LIGHTING	LAMBERT ROAD	GRIMSBY	527076.13	408693.99	1988		52208	1 Urbis LED	Axia 16 LED 500mA	28 Watts	6.00 Metres	Galvanised Steel	
Y	13	STREET LIGHTING	LAMBERT ROAD	GRIMSBY	527108.35	408690.22	1988		52209	1 Urbis LED	Axia 16 LED 500mA	28 Watts	6.00 Metres	Galvanised Steel	
Y	14	STREET LIGHTING	LAMBERT ROAD	GRIMSBY	527139.84	408697.95	1988		52210	1 Urbis LED	Axia 16 LED 500mA	28 Watts	6.00 Metres	Galvanised Steel	
Y	15	STREET LIGHTING	LAMBERT ROAD	GRIMSBY	527161.19	408717.19	1988		52211	1 Urbis LED	Axia 16 LED 500mA	28 Watts	6.00 Metres	Galvanised Steel	
Y	16	STREET LIGHTING	LAMBERT ROAD	GRIMSBY	527188.63	408711.67	1988		52212	1 Urbis LED	Axia 16 LED 500mA	28 Watts	6.00 Metres	Galvanised Steel	
Y	17	STREET LIGHTING	LAMBERT ROAD	GRIMSBY	527218.26	408720.44	2024	12/08/2024	69964	Urbis	Axia 24 LED 500mA	28 Watts	6.00 Metres	Galvanised Steel	
Y	18	STREET LIGHTING	LAMBERT ROAD	GRIMSBY	527240.73	408738.27	1963		52214	1 Urbis LED	Axia 16 LED 500mA	28 Watts	6.00 Metres	Galvanised Steel	
Y	19	STREET LIGHTING	LAMBERT ROAD	GRIMSBY	527263.01	408731.55	1963		52215	1 Urbis LED	Axia 16 LED 500mA	28 Watts	6.00 Metres	Galvanised Steel	
Y	20	STREET LIGHTING	LAMBERT ROAD	GRIMSBY	527290.07	408751.53	1963		52216	1 Urbis LED	Axia 16 LED 500mA	28 Watts	6.00 Metres	Galvanised Steel	
Y	21	STREET LIGHTING	LAMBERT ROAD	GRIMSBY	527314.75	408758.16	1963		52217	1 Urbis LED	Axia 16 LED 500mA	28 Watts	6.00 Metres	Galvanised Steel	
Y	22	STREET LIGHTING	LAMBERT ROAD	GRIMSBY	527337.02	408751.81	1981		52218	1 Urbis LED	Axia 16 LED 500mA	28 Watts	6.00 Metres	Galvanised Steel	
Y	1	STREET LIGHTING	LUDFORD STREET	GRIMSBY	527374.04	408648.49	1988		52988	1 Urbis LED	Axia 16 LED 500mA	28 Watts	6.00 Metres	Galvanised Steel	
Y	2	STREET LIGHTING	LUDFORD STREET	GRIMSBY	527364.1	408685.22	1988		52989	1 Urbis LED	Axia 16 LED 500mA	28 Watts	6.00 Metres	Galvanised Steel	
Y	3	STREET LIGHTING	LUDFORD STREET	GRIMSBY	527355.08	408718.08	1988		52990	1 Urbis LED	Axia 16 LED 500mA	28 Watts	6.00 Metres	Galvanised Steel	
Y	4	STREET LIGHTING	LUDFORD STREET	GRIMSBY	527347.57	408746.13	1988		52991	1 Urbis LED	Axia 16 LED 500mA	28 Watts	6.00 Metres	Galvanised Steel	
Y	5	STREET LIGHTING	LUDFORD STREET	GRIMSBY	527341.31	408769.23	1988		52992	1 Urbis LED	Axia 16 LED 500mA	28 Watts	6.00 Metres	Galvanised Steel	
Y	6	STREET LIGHTING	LUDFORD STREET	GRIMSBY	527335.23	408790.77	1988		52993	1 Urbis LED	Axia 16 LED 500mA	28 Watts	6.00 Metres	Galvanised Steel	
Y	1	STREET LIGHTING	PARK DRIVE	GRIMSBY	526807.5	408459.12	1986		54621	1 Urbis LED	Axia 16 LED 500mA	28 Watts	6.00 Metres	Galvanised Steel	
Y	2	STREET LIGHTING	PARK DRIVE	GRIMSBY	526811.33	408425.39	2004		54622	1 Urbis LED	Axia 16 LED 500mA	28 Watts	6.00 Metres	Stainless Steel	
Y	3	STREET LIGHTING	PARK DRIVE	GRIMSBY	526814.68	408393.39	1986		54623	1 Urbis LED	Axia 16 LED 500mA	28 Watts	6.00 Metres	Galvanised Steel	
Y	4	STREET LIGHTING	PARK DRIVE	GRIMSBY	526818.25	408361.08	1986		54624	1 Urbis LED	Axia 16 LED 500mA	28 Watts	6.00 Metres	Galvanised Steel	
Y	5	STREET LIGHTING	PARK DRIVE	GRIMSBY	526821.75	408331.38	1986		54625	1 Urbis LED	Axia 16 LED 500mA	28 Watts	6.00 Metres	Galvanised Steel	
Y	6	STREET LIGHTING	PARK DRIVE	GRIMSBY	526825.43	408298.33	2003		54626	1 Urbis LED	Axia 16 LED 500mA	28 Watts	6.00 Metres	Stainless Steel	
Y	7	STREET LIGHTING	PARK DRIVE	GRIMSBY	526826	408270	2001		54627	1 Urbis LED	Axia 16 LED 500mA	28 Watts	6.00 Metres	Galvanised Steel	
Y	8	STREET LIGHTING	PARK DRIVE	GRIMSBY	526832.79	408235.62	2020	31/03/2020	67839	Urbis	Teceo 16 LED 500mA	25 Watts	6.00 Metres	Galvanised Steel	
Y	9	STREET LIGHTING	PARK DRIVE	GRIMSBY	526849.73	408209.38	1986		54629	1 Urbis LED	Axia 16 LED 500mA	28 Watts	6.00 Metres	Galvanised Steel	
Y	10	STREET LIGHTING	PARK DRIVE	GRIMSBY	526875.32	408188.86	2015		54630	1 Urbis LED	Axia 16 LED 500mA	28 Watts	6.00 Metres	Galvanised Steel	
Y	11	STREET LIGHTING	PARK DRIVE	GRIMSBY	526902.94	408176.52	1986		54631	1 Urbis LED	Axia 16 LED 500mA	28 Watts	6.00 Metres	Galvanised Steel	
Y	12	STREET LIGHTING	PARK DRIVE	GRIMSBY	526937.37	408166.67	1998		54632	1 Urbis LED	Axia 16 LED 500mA	28 Watts	6.00 Metres	Galvanised Steel	
Y	13	STREET LIGHTING	PARK DRIVE	GRIMSBY	526964.62	408165.38	1986		54633	1 Urbis LED	Axia 16 LED 500mA	28 Watts	6.00 Metres	Galvanised Steel	
Y	14	STREET LIGHTING	PARK DRIVE	GRIMSBY	526991.87	408165.47	1986		54634	1 Urbis LED	Axia 16 LED 500mA	28 Watts	6.00 Metres	Galvanised Steel	
Y	15	STREET LIGHTING	PARK DRIVE	GRIMSBY	527003.04	408125.4	1986		54635	1 Urbis LED	Teceo 40 LED 500mA	64 Watts	6.00 Metres	Galvanised Steel	
Y	16	STREET LIGHTING	PARK DRIVE	GRIMSBY	527004.88	408090.24	1986		54636	1 Urbis LED	Teceo 40 LED 500mA	64 Watts	6.00 Metres	Galvanised Steel	
Y	17	STREET LIGHTING	PARK DRIVE	GRIMSBY	527012.8	408157.16	1986		54637	1 Urbis LED	Teceo 40 LED 500mA	64 Watts	6.00 Metres	Galvanised Steel	
Y	18	STREET LIGHTING	PARK DRIVE	GRIMSBY	527031.38	408169.78	2021	12/10/2021	68738	Urbis	Axia 24 LED 500mA	28 Watts	6.00 Metres	Galvanised Steel	
Y	19	STREET LIGHTING	PARK DRIVE	GRIMSBY	527065.09	408178.43	2007		54639	1 Urbis LED	Axia 16 LED 500mA	28 Watts	6.00 Metres	Steel	
Y	20	STREET LIGHTING	PARK DRIVE	GRIMSBY	527031.99	408170.01	2021	12/10/2021	68855	Urbis	Axia 24 LED 500mA	28 Watts	6.00 Metres	Galvanised Steel	
Y	21	STREET LIGHTING	PARK DRIVE	GRIMSBY	527113.14	408200.25	1986		54641	1 Urbis LED	Axia 16 LED 500mA	28 Watts	6.00 Metres	Galvanised Steel	
Y	22	STREET LIGHTING	PARK DRIVE	GRIMSBY	527140.95	408222.43	1998		54642	1 Urbis LED	Axia 16 LED 500mA	28 Watts	6.00 Metres	Galvanised Steel	
Y	23	STREET LIGHTING	PARK DRIVE	GRIMSBY	527155.49	408240.85	2003		54643	1 Urbis LED	Axia 16 LED 500mA	28 Watts	6.00 Metres	Stainless Steel	
Y	24	STREET LIGHTING	PARK DRIVE	GRIMSBY	527162.3	408271.47	2008		54644	1 Urbis LED	Axia 16 LED 500mA	28 Watts	6.00 Metres	Steel	
Y	25	STREET LIGHTING	PARK DRIVE	GRIMSBY	527157.86	408294.54	2007		54645	1 Urbis LED	Axia 16 LED 500mA	28 Watts	6.00 Metres	Steel	
Y	26	STREET LIGHTING	PARK DRIVE	GRIMSBY	527149.62	408325.53	1986		54646	1 Urbis LED	Axia 16 LED 500mA	28 Watts	6.00 Metres	Galvanised Steel	
Y	27	STREET LIGHTING	PARK DRIVE	GRIMSBY	527143.42	408365.97	1986		54647	Urbis	Teceo 24 LED 500mA	40 Watts	6.00 Metres	Galvanised Steel	
Y	28	STREET LIGHTING	PARK DRIVE	GRIMSBY	527135.27	408400.33	1986		54648	1 Urbis LED	Axia 16 LED 500mA	28 Watts	6.00 Metres	Galvanised Steel	
Y	29	STREET LIGHTING	PARK DRIVE	GRIMSBY	527130.32	408425.06	1986		54649	1 Urbis LED	Axia 16 LED 500mA	28 Watts	6.00 Metres	Galvanised Steel	
Y	30	STREET LIGHTING	PARK DRIVE	GRIMSBY	527125.34	408453.05	1986		54650	1 Urbis LED	Axia 16 LED 500mA	28 Watts	6.00 Metres	Galvanised Steel	
Y	31	STREET LIGHTING	PARK DRIVE	GRIMSBY	527118.9	408483.06	1986		54651	1 Urbis LED	Axia 16 LED 500mA	28 Watts	6.00 Metres	Galvanised Steel	

Y	32	STREET LIGHTING	PARK DRIVE	GRIMSBY	527113.01	408515.74	1986		54652	1 Urbis LED	Axia 16 LED 500mA	28 Watts	6.00 Metres	Galvanised Steel	
Y	33	STREET LIGHTING	PARK DRIVE	GRIMSBY	527097.48	408542.97	2011		54653	1 Urbis LED	Axia 16 LED 500mA	28 Watts	6.00 Metres	Steel	
Y	1	STREET LIGHTING	ST AUGUSTINE AVENUE	GRIMSBY	527468.93	408292.62	1994		57600	1 Urbis LED	Axia 16 LED 500mA	28 Watts	6.00 Metres	Galvanised Steel	
Y	2	STREET LIGHTING	ST AUGUSTINE AVENUE	GRIMSBY	527442.6	408298.14	1994		57601	1 Urbis LED	Axia 16 LED 500mA	28 Watts	6.00 Metres	Galvanised Steel	
Y	3	STREET LIGHTING	ST AUGUSTINE AVENUE	GRIMSBY	527421.8	408279.82	1994		57602	1 Urbis LED	Axia 16 LED 500mA	28 Watts	6.00 Metres	Galvanised Steel	
Y	4	STREET LIGHTING	ST AUGUSTINE AVENUE	GRIMSBY	527389.76	408283.69	1994		57603	1 Urbis LED	Axia 16 LED 500mA	28 Watts	6.00 Metres	Galvanised Steel	
Y	5	STREET LIGHTING	ST AUGUSTINE AVENUE	GRIMSBY	527366.56	408277.25	1994		57604	1 Urbis LED	Axia 16 LED 500mA	28 Watts	6.00 Metres	Galvanised Steel	
Y	6	STREET LIGHTING	ST AUGUSTINE AVENUE	GRIMSBY	527345.02	408259.29	1994		57605	1 Urbis LED	Axia 16 LED 500mA	28 Watts	6.00 Metres	Galvanised Steel	
Y	7	STREET LIGHTING	ST AUGUSTINE AVENUE	GRIMSBY	527315.75	408251.01	1994		57606	1 Urbis LED	Axia 16 LED 500mA	28 Watts	6.00 Metres	Galvanised Steel	
Y	8	STREET LIGHTING	ST AUGUSTINE AVENUE	GRIMSBY	527285.55	408254.78	1994		57607	1 Urbis LED	Axia 16 LED 500mA	28 Watts	6.00 Metres	Galvanised Steel	
Y	9	STREET LIGHTING	ST AUGUSTINE AVENUE	GRIMSBY	527263.64	408236.46	1994		57608	1 Urbis LED	Axia 16 LED 500mA	28 Watts	6.00 Metres	Galvanised Steel	
Y	10	STREET LIGHTING	ST AUGUSTINE AVENUE	GRIMSBY	527235.66	408241.25	1994		57609	1 Urbis LED	Axia 16 LED 500mA	28 Watts	6.00 Metres	Galvanised Steel	
Y	11	STREET LIGHTING	ST AUGUSTINE AVENUE	GRIMSBY	527212.27	408234.71	1994		57610	1 Urbis LED	Axia 16 LED 500mA	28 Watts	6.00 Metres	Galvanised Steel	
Y	12	STREET LIGHTING	ST AUGUSTINE AVENUE	GRIMSBY	527199.39	408209.76	1994		57611	1 Urbis LED	Axia 16 LED 500mA	28 Watts	6.00 Metres	Galvanised Steel	
Y	13	STREET LIGHTING	ST AUGUSTINE AVENUE	GRIMSBY	527215.77	408176.72	1994		57612	1 Urbis LED	Axia 16 LED 500mA	28 Watts	6.00 Metres	Galvanised Steel	
Y	14	STREET LIGHTING	ST AUGUSTINE AVENUE	GRIMSBY	527219.27	408149.19	1994		57613	1 Urbis LED	Axia 16 LED 500mA	28 Watts	6.00 Metres	Galvanised Steel	
Y	15	STREET LIGHTING	ST AUGUSTINE AVENUE	GRIMSBY	527210.99	408118.17	1994		57614	1 Urbis LED	Axia 16 LED 500mA	28 Watts	6.00 Metres	Galvanised Steel	
Y	16	STREET LIGHTING	ST AUGUSTINE AVENUE	GRIMSBY	527214.48	408086.87	1994		57615	1 Urbis LED	Axia 16 LED 500mA	28 Watts	6.00 Metres	Galvanised Steel	
Y	1	STREET LIGHTING	ABBEY DRIVE EAST	GRIMSBY	526837.39	408876.69	2012		42642	1 Urbis LED	Teceo 24 LED 500mA	40 Watts	6.00 Metres	Steel	
Y	2	STREET LIGHTING	ABBEY DRIVE EAST	GRIMSBY	526847.82	408860.18	2012		42643	1 Urbis LED	Teceo 24 LED 500mA	40 Watts	6.00 Metres	Steel	
Y	3	STREET LIGHTING	ABBEY DRIVE EAST	GRIMSBY	526863	408836	2001		42644	1 Urbis LED	Teceo 24 LED 500mA	40 Watts	6.00 Metres	Galvanised Steel	
Y	4	STREET LIGHTING	ABBEY DRIVE EAST	GRIMSBY	526878	408811	2001		42645	1 Urbis LED	Teceo 24 LED 500mA	40 Watts	6.00 Metres	Galvanised Steel	
Y	5	STREET LIGHTING	ABBEY DRIVE EAST	GRIMSBY	526894	408805	2009	03/11/2009	42646	1 Urbis LED	Teceo 24 LED 500mA	40 Watts	6.00 Metres	Galvanised Steel	
Y	6	STREET LIGHTING	ABBEY DRIVE EAST	GRIMSBY	526915.06	408811.01	2009	03/11/2009	42647	1 Urbis LED	Teceo 24 LED 500mA	40 Watts	6.00 Metres	Galvanised Steel	
Y	7	STREET LIGHTING	ABBEY DRIVE EAST	GRIMSBY	526953.18	408814.88	2009		42648	1 Urbis LED	Teceo 24 LED 500mA	40 Watts	6.00 Metres	Steel	
Y	8	STREET LIGHTING	ABBEY DRIVE EAST	GRIMSBY	526978.03	408832.83	1999		42649	1 Urbis LED	Teceo 24 LED 500mA	40 Watts	8.00 Metres	Galvanised Steel	
Y	9	STREET LIGHTING	ABBEY DRIVE EAST	GRIMSBY	527010.24	408841.83	1999		42650	1 Urbis LED	Teceo 24 LED 500mA	40 Watts	8.00 Metres	Galvanised Steel	
Y	1	STREET LIGHTING	WINTRINGHAM ROAD	GRIMSBY	527039.21	408842.21	1992		60977	1 Urbis LED	Teceo 24 LED 500mA	40 Watts	8.00 Metres	Galvanised Steel	
Y	2	STREET LIGHTING	WINTRINGHAM ROAD	GRIMSBY	527069.78	408839.26	1992		60978	1 Urbis LED	Teceo 24 LED 500mA	40 Watts	8.00 Metres	Galvanised Steel	
Y	3	STREET LIGHTING	WINTRINGHAM ROAD	GRIMSBY	527098.13	408824.26	1992		60979	1 Urbis LED	Teceo 24 LED 500mA	40 Watts	8.00 Metres	Galvanised Steel	
Y	4	STREET LIGHTING	WINTRINGHAM ROAD	GRIMSBY	527129.43	408833.09	1992		60980	1 Urbis LED	Teceo 24 LED 500mA	40 Watts	8.00 Metres	Galvanised Steel	
Y	5	STREET LIGHTING	WINTRINGHAM ROAD	GRIMSBY	527164.04	408829.51	1992		60981	1 Urbis LED	Teceo 24 LED 500mA	40 Watts	8.00 Metres	Galvanised Steel	
Y	6	STREET LIGHTING	WINTRINGHAM ROAD	GRIMSBY	527190.19	408814.59	1992		60982	1 Urbis LED	Teceo 24 LED 500mA	40 Watts	8.00 Metres	Galvanised Steel	
Y	7	STREET LIGHTING	WINTRINGHAM ROAD	GRIMSBY	527223.88	408823.15	1992		60983	1 Urbis LED	Teceo 24 LED 500mA	40 Watts	8.00 Metres	Galvanised Steel	
Y	8	STREET LIGHTING	WINTRINGHAM ROAD	GRIMSBY	527250.95	408808.52	1992		60984	1 Urbis LED	Teceo 24 LED 500mA	40 Watts	8.00 Metres	Galvanised Steel	
Y	9	STREET LIGHTING	WINTRINGHAM ROAD	GRIMSBY	527283.17	408816.8	1992		60985	1 Urbis LED	Teceo 24 LED 500mA	40 Watts	8.00 Metres	Galvanised Steel	
Y	10	STREET LIGHTING	WINTRINGHAM ROAD	GRIMSBY	527312.07	408802.35	1992		60986	1 Urbis LED	Teceo 24 LED 500mA	40 Watts	8.00 Metres	Galvanised Steel	
Y	11	STREET LIGHTING	WINTRINGHAM ROAD	GRIMSBY	527335.09	408811.83	1992		60987	1 Urbis LED	Teceo 24 LED 500mA	40 Watts	8.00 Metres	Galvanised Steel	
Y	12	STREET LIGHTING	WINTRINGHAM ROAD	GRIMSBY	527369.72	408808.14	1992		60988	1 Urbis LED	Teceo 24 LED 500mA	40 Watts	8.00 Metres	Galvanised Steel	
Y	13	STREET LIGHTING	WINTRINGHAM ROAD	GRIMSBY	527394.91	408805.36	1992		60989	1 Urbis LED	Teceo 24 LED 500mA	40 Watts	8.00 Metres	Galvanised Steel	
Y	14	STREET LIGHTING	WINTRINGHAM ROAD	GRIMSBY	527426.56	408790.61	1992		60990	1 Urbis LED	Teceo 24 LED 500mA	40 Watts	8.00 Metres	Galvanised Steel	
Y	15	STREET LIGHTING	WINTRINGHAM ROAD	GRIMSBY	527453.65	408786.94	1992		60991	1 Urbis LED	Teceo 24 LED 500mA	40 Watts	8.00 Metres	Galvanised Steel	
Y	16	STREET LIGHTING	WINTRINGHAM ROAD	GRIMSBY	527482.13	408782.77	1992		60992	1 Urbis LED	Teceo 24 LED 500mA	40 Watts	8.00 Metres	Galvanised Steel	
Y	1	STREET LIGHTING	WINTRINGHAM ROAD UNDERPASS	GRIMSBY	527349.34	408810.23	1998		60993	Urbis		70 Watts	2.50 Metres	Unknown	
Y	2	STREET LIGHTING	WINTRINGHAM ROAD UNDERPASS	GRIMSBY	527352.38	408800.61	1998		60994	Urbis		70 Watts	2.50 Metres	Unknown	
Y	3	STREET LIGHTING	WINTRINGHAM ROAD UNDERPASS	GRIMSBY	527357.44	408809.47	1998		60995	Urbis		70 Watts	2.50 Metres	Unknown	
Y	4	STREET LIGHTING	WINTRINGHAM ROAD UNDERPASS	GRIMSBY	527360.74	408799.85	1998		60996	Urbis		70 Watts	2.50 Metres	Unknown	
Y	1	STREET LIGHTING	LAMPTON GROVE	GRIMSBY	526993.77	408685.59	1993		52221	Urbis	Axia 16 LED 350mA	19 Watts	6.00 Metres	Galvanised Steel	
Y	2	STREET LIGHTING	LAMPTON GROVE	GRIMSBY	526994.14	408716.7	1993		52222	Urbis	Axia 16 LED 350mA	19 Watts	6.00 Metres	Galvanised Steel	
Y	1	STREET LIGHTING	LEGSBY AVENUE	GRIMSBY	527115.39	408808.98	2006		52434	1 Urbis LED	Axia 16 LED 500mA	28 Watts	6.00 Metres	Stainless Steel	
Y	2	STREET LIGHTING	LEGSBY AVENUE	GRIMSBY	527128.46	408794.43	1992		52435	1 Urbis LED	Axia 16 LED 500mA	28 Watts	6.00 Metres	Galvanised Steel	
Y	3	STREET LIGHTING	LEGSBY AVENUE	GRIMSBY	527130.48	408752.55	1992		52436	1 Urbis LED	Axia 16 LED 500mA	28 Watts	6.00 Metres	Galvanised Steel	
Y	4	STREET LIGHTING	LEGSBY AVENUE	GRIMSBY	527149.08	408719.5	1992		52437	1 Urbis LED	Axia 16 LED 500mA	28 Watts	6.00 Metres	Galvanised Steel	
Y	5	STREET LIGHTING	LEGSBY AVENUE	GRIMSBY	527157	408689	2006		52438	1 Urbis LED	Axia 16 LED 500mA	28 Watts	6.00 Metres	Stainless Steel	
Y	6	STREET LIGHTING	LEGSBY AVENUE	GRIMSBY	527156.44	408657.27	1992		52439	1 Urbis LED	Axia 16 LED 500mA	28 Watts	6.00 Metres	Galvanised Steel	
Y	7	STREET LIGHTING	LEGSBY AVENUE	GRIMSBY	527173.38	408630.11	1992		52440	1 Urbis LED	Axia 16 LED 500mA	28 Watts	6.00 Metres	Galvanised Steel	
Y	8	STREET LIGHTING	LEGSBY AVENUE	GRIMSBY	527173.01	408596.6	1992		52441	1 Urbis LED	Axia 16 LED 500mA	28 Watts	6.00 Metres	Galvanised Steel	
Y	9	STREET LIGHTING	LEGSBY AVENUE	GRIMSBY	527191.06	408565.58	1992		52442	1 Urbis LED	Axia 16 LED 500mA	28 Watts	6.00 Metres	Galvanised Steel	
Y	10	STREET LIGHTING	LEGSBY AVENUE	GRIMSBY	527197.68	408541.92	1992		52443	1 Urbis LED	Axia 16 LED 500mA	28 Watts	6.00 Metres	Galvanised Steel	
Y	11	STREET LIGHTING	LEGSBY AVENUE	GRIMSBY	527204.5	408515.78	1992		52444	1 Urbis LED	Axia 16 LED 500mA	28 Watts	6.00 Metres	Galvanised Steel	
Y	12	STREET LIGHTING	LEGSBY AVENUE	GRIMSBY	527203.76	408484.57	1992		52445	1 Urbis LED	Axia 16 LED 500mA	28 Watts	6.00 Metres	Galvanised Steel	
Y	13	STREET LIGHTING	LEGSBY AVENUE	GRIMSBY	527221.62	408452.99	1992		52446	1 Urbis LED	Axia 16 LED 500mA	28 Watts	6.00 Metres	Galvanised Steel	
Y	14	STREET LIGHTING	LEGSBY AVENUE	GRIMSBY	527229.9	408423.63	1992		52447	1 Urbis LED	Axia 16 LED 500mA	28 Watts	6.00 Metres	Galvanised Steel	
Y	15	STREET LIGHTING	LEGSBY AVENUE	GRIMSBY	527226.77	408399.78	1992		52448	1 Urbis LED	Axia 16 LED 500mA	28 Watts	6.00 Metres	Galvanised Steel	
Y	16	STREET LIGHTING	LEGSBY AVENUE	GRIMSBY	527233.3	408370.55	1992		52449	1 Urbis LED	Axia 16 LED 500mA	28 Watts	6.00 Metres	Galvanised Steel	
Y	17	STREET LIGHTING	LEGSBY AVENUE	GRIMSBY	527238.64	408351.86	1992		52450	1 Urbis LED	Axia 16 LED 500mA	28 Watts	6.00 Metres	Galvanised Steel	
Y	18	STREET LIGHTING	LEGSBY AVENUE	GRIMSBY	527256.5	408331.05	1992		52451	1 Urbis LED	Axia 16 LED 500mA	28 Watts	6.00 Metres	Galvanised Steel	
Y	19	STREET LIGHTING	LEGSBY AVENUE	GRIMSBY	527251.52	408304.36	1994		52452	1 Urbis LED	Axia 16 LED 500mA	28 Watts	6.00 Metres	Galvanised Steel	
Y	20	STREET LIGHTING	LEGSBY AVENUE	GRIMSBY	527268.09	408287.6	1994		52453	1 Urbis LED	Axia 16 LED 500mA	28 Watts	6.00 Metres	Galvanised Steel	
Y	21	STREET LIGHTING	LEGSBY AVENUE	GRIMSBY	527264.41	408257.31	1994		52454	1 Urbis LED	Axia 16 LED 500mA	28 Watts	6.00 Metres	Galvanised Steel	
Y	22	STREET LIGHTING	LEGSBY AVENUE	GRIMSBY	527283.56	408234.02	1994		52455	1 Urbis LED	Axia 16 LED 500mA	28 Watts	6.00 Metres	Galvanised Steel	
Y	23	STREET LIGHTING	LEGSBY AVENUE	GRIMSBY	527275.64	408216.99	1994		52456	1 Urbis LED	Axia 16 LED 500mA	28 Watts	6.00 Metres	Galvanised Steel	
Y	24	STREET LIGHTING	LEGSBY AVENUE	GRIMSBY	527283.38	408188.73	1994		52457	1 Urbis LED	Axia 16 LED 500mA	28 Watts	6.00 Metres	Galvanised Steel	
Y	25	STREET LIGHTING	LEGSBY AVENUE	GRIMSBY	527303.45	408162.31	1992		52458	1 Urbis LED	Axia 16 LED 500mA	28 Watts	6.00 Metres	Galvanised Steel	
Y	26	STREET LIGHTING	LEGSBY AVENUE	GRIMSBY	527299.21	408131.1	1992		52459	1 Urbis LED	Axia 16 LED 500mA	28 Watts	6.00 Metres	Galvanised Steel	
Y	27	STREET LIGHTING	LEGSBY AVENUE	GRIMSBY	527318.17	408105.97	1992		52460	1 Urbis LED	Axia 16 LED 500mA	28 Watts	6.00 Metres	Galvanised Steel	
Y	28	STREET LIGHTING	LEGSBY AVENUE	GRIMSBY	527313.39	408080.28	1992		52461	1 Urbis LED	Axia 16 LED 500mA	28 Watts	6.00 Metres	Galvanised Steel	
Y	29	STREET LIGHTING	LEGSBY AVENUE	GRIMSBY	527333.51	408040.65	1992		52462	Urbis	Axia 16 LED 350mA	19 Watts	6.00 Metres	Galvanised Steel	
Y	30	STREET LIGHTING	LEGSBY AVENUE	GRIMSBY	527320.62	408041.2	1992		52463	Urbis	Axia 16 LED 350mA	19 Watts	6.00 Metres	Galvanised Steel	
Y	31	STREET LIGHTING	LEGSBY AVENUE	GRIMSBY	527335.72	408009.81	1992		52464	Urbis	Axia 16 LED 350mA	19 Watts	6.00 Metres	Galvanised Steel	
Y	32	STREET LIGHTING	LEGSBY AVENUE	GRIMSBY	527323.39	408007.79	1994		52465	Urbis	Axia 16 LED 350mA	19 Watts	6.00 Metres	Galvanised Steel	
Y	33	STREET LIGHTING	LEGSBY AVENUE	GRIMSBY	527338.67	407976.39	1994		52466	Urbis	Axia 16 LED 350mA	19 Watts	6.00 Metres	Galvanised Steel	
Y	34	STREET LIGHTING	LEGSBY AVENUE	GRIMSBY	527325.96	407974.74	1994		52467	Urbis	Axia 16 LED 350mA	19 Watts	6.00 Metres	Galvanised Steel	
Y	35	STREET LIGHTING	LEGSBY AVENUE	GRIMSBY	527342.95	407949.36	1994		52468	Urbis	Axia 16 LED 350mA	19 Watts	6.00 Metres	Galvanised Steel	
Y	36	STREET LIGHTING	LEGSBY AVENUE	GRIMSBY	527345.16	407921.38	1994		52469	Urbis	Axia 16 LED 350mA	19 Watts	6.00 Metres	Galvanised Steel	
Y	1	STREET LIGHTING	ST OLAFS GROVE	GRIMSBY	526971.34	408797.94	2014		57943	1 Urbis LED	Axia 16 LED 500mA	28 Watts	6.00 Metres	Galvanised Steel	
Y	2	STREET LIGHTING	ST OLAFS GROVE	GRIMSBY	526977.95	408767.25	2018	02/10/2018	67166	Urbis	Axia 16 LED 500mA	28 Watts	6.00 Metres	Galvanised Steel	
Y	1	STREET LIGHTING	WELHOLME AVENUE	GRIMSBY	526602.08	408714.28	2003		60095	1 Urbis LED	Teceo 24 LED 500mA	40 Watts	6.00 Metres	Stainless Steel	
Y	2	STREET LIGHTING	WELHOLME AVENUE	GRIMSBY	526612.74	408679.04	2001		60096	1 Urbis LED	Teceo 24 LED 500mA	40 Watts	6.00 Metres	Galvanised Steel	
Y	3	STREET LIGHTING	WELHOLME AVENUE	GRIMSBY	526618.7	408645.1	2001		60097	1 Urbis LED	Teceo 24 LED 500mA	40 Watts	6.00 Metres	Galvanised Steel	
Y	4	STREET LIGHTING	WELHOLME AVENUE	GRIMSBY	526625.32	408617.64	2006		60098	1 Urbis LED	Teceo 24 LED 500mA	40 Watts	6.00 Metres	Stainless Steel	
Y	5	STREET LIGHTING	WELHOLME AVENUE	GRIMSBY	526635.12	408584.37	2001		60099	1 Urbis LED	Teceo 24 LED 500mA	40 Watts	6.00 Metres	Galvanised Steel	
Y	6	STREET LIGHTING	WELHOLME AVENUE	GRIMSBY	526654.15	408548.15	2001		60100	1 Urbis LED	Teceo 24 LED 500mA	40 Watts	6.00 Metres	Galvanised Steel	
Y	7	STREET LIGHTING	WELHOLME AVENUE	GRIMSBY	526661.9	408515.6	2003		60101	1 Urbis LED	Teceo 24 LED 500mA	40 Watts	6.00 Metres	Stainless Steel	
Y	8	STREET LIGHTING	WELHOLME AVENUE	GRIMSBY	526660.12	408479.17	2003		60102	1 Urbis LED	Teceo 24 LED 500mA	40 Watts	6.00 Metres	Stainless Steel	
Y	9	STREET LIGHTING	WELHOLME AVENUE	GRIMSBY	526675	408455	2003		60103	1 Urbis LED	Teceo 24 LED 500mA	40 Watts	6.00 Metres	Stainless Steel	
Y	10	STREET LIGHTING	WELHOLME AVENUE	GRIMSBY	526666.8	408416.7	2003		60104	1 Urbis LED	Teceo 24 LED 500mA	40 Watts	6.00 Metres	Stainless Steel	
Y	11	STREET LIGHTING	WELHOLME AVENUE	GRIMSBY	526682.24	408391.04	2003		60105	1 Urbis LED	Teceo 24 LED 500mA	40 Watts	6.00 Metres	Stainless Steel	
Y	12	STREET LIGHTING	WELHOLME AVENUE	GRIMSBY	526685.74	408357.46	2003		60106	1 Urbis LED	Teceo 24 LED 500mA	40 Watts	6.00 Metres	Stainless Steel	
Y	13	STREET LIGHTING	WELHOLME AVENUE	GRIMSBY	526690.2	408317.4	1990	01/01/1990	60107	1 Urbis LED	Teceo 24 LED 500mA	40 Watts	6.00 Metres	Galvanised Steel	
Y	14	STREET LIGHTING	WELHOLME AVENUE	GRIMSBY	526694.29	408280.48	2003		60108	1 Urbis LED	Teceo 24 LED 500mA	40 Watts	6.00 Metres	Stainless Steel	
Y	15	STREET LIGHTING	WELHOLME AVENUE	GRIMSBY	526685.52	408247.57	2003		60109	1 Urbis LED	Teceo 24 LED 500mA	40 Watts	6.00 Metres	Stainless Steel	
Y	16	STREET LIGHTING	WELHOLME AVENUE	GRIMSBY	526691.12	408218.05	2003		60110	Urbis	Teceo 24 LED 500mA	40 Watts	6.00 Metres	Stainless Steel	
Y	17	STREET LIGHTING	WELHOLME AVENUE	GRIMSBY	526704.88	408184.59	2003		60111	1 Urbis LED	Teceo 24 LED 500mA	40 Watts	6.00 Metres	Stainless Steel	
Y	18	STREET LIGHTING	WELHOLME AVENUE	GRIMSBY	526697.9	408155.3	2003		60112	1 Urbis LED	Teceo 24 LED 500mA	40 Watts	6.00 Metres	Stainless Steel	
Y	19	STREET LIGHTING	WELHOLME AVENUE	GRIMSBY	526698.77	408125.85	2003		60113	1 Urbis LED	Teceo 24 LED 500mA	40 Watts	6.00 Metres	Stainless Steel	
Y	20	STREET LIGHTING	WELHOLME AVENUE	GRIMSBY	526714.56	408092.94	2003		60114	1 Urbis LED	Teceo 24 LED 500mA	40 Watts	6.00 Metres	Stainless Steel	
Y	21	STREET LIGHTING	WELHOLME AVENUE	GRIMSBY	526705.94	408059.74	2005		60115	1 Urbis LED	Teceo 24 LED 500mA	40 Watts	6.00 Metres	Stainless Steel	
Y	22	STREET LIGHTING	WELHOLME AVENUE	GRIMSBY	526721.92	408027.53	1990		60116	1 Urbis LED	Teceo 24 LED 500mA	40 Watts	6.00 Metres	Galvanised Steel	
Y	23	STREET LIGHTING	WELHOLME AVENUE	GRIMSBY	526713.82	407995.94	1990		60117	1 Urbis LED	Teceo 24 LED 500mA	40 Watts	6.00 Metres	Galvanised Steel	

Y	24	STREET LIGHTING	WELHOLME AVENUE	GRIMSBY	526717.36	407963.03	1990		60118	1 Urbis LED	Teceo 24 LED 500mA	40 Watts	6.00 Metres	Galvanised Steel	
Y	25	STREET LIGHTING	WELHOLME AVENUE	GRIMSBY	526720.4	407935.12	1990		60119	1 Urbis LED	Teceo 24 LED 500mA	40 Watts	6.00 Metres	Galvanised Steel	
Y	26	STREET LIGHTING	WELHOLME AVENUE	GRIMSBY	526735.84	407901.14	1990		60120	1 Urbis LED	Teceo 24 LED 500mA	40 Watts	6.00 Metres	Galvanised Steel	
Y	27	STREET LIGHTING	WELHOLME AVENUE	GRIMSBY	526739.26	407870.69	1990		60121	1 Urbis LED	Teceo 24 LED 500mA	40 Watts	6.00 Metres	Galvanised Steel	
Y	28	STREET LIGHTING	WELHOLME AVENUE	GRIMSBY	526741.92	407845.82	1990		60122	1 Urbis LED	Teceo 24 LED 500mA	40 Watts	6.00 Metres	Galvanised Steel	
Y	29	STREET LIGHTING	WELHOLME AVENUE	GRIMSBY	526745.46	407813.04	1990		60123	1 Urbis LED	Teceo 24 LED 500mA	40 Watts	6.00 Metres	Galvanised Steel	
Y	30	STREET LIGHTING	WELHOLME AVENUE	GRIMSBY	526748.12	407787.78	1990		60124	1 Urbis LED	Teceo 24 LED 500mA	40 Watts	6.00 Metres	Galvanised Steel	
Y	31	STREET LIGHTING	WELHOLME AVENUE	GRIMSBY	526739.26	407763.16	1990		60125	1 Urbis LED	Teceo 24 LED 500mA	40 Watts	6.00 Metres	Galvanised Steel	
Y	1	STREET LIGHTING	WELHOLME ROAD	GRIMSBY	526524	408455.42	1989		60126	1 Urbis LED	Teceo 48 LED 500mA	79 Watts	8.00 Metres	Galvanised Steel	
Y	2	STREET LIGHTING	WELHOLME ROAD	GRIMSBY	526559.53	408447.77	1989		60127	1 Urbis LED	Teceo 48 LED 500mA	79 Watts	8.00 Metres	Galvanised Steel	
Y	3	STREET LIGHTING	WELHOLME ROAD	GRIMSBY	526591.75	408451.36	1989		60128	1 Urbis LED	Teceo 48 LED 500mA	79 Watts	8.00 Metres	Galvanised Steel	
Y	4	STREET LIGHTING	WELHOLME ROAD	GRIMSBY	526620.66	408465.72	1989		60129	1 Urbis LED	Teceo 48 LED 500mA	79 Watts	8.00 Metres	Galvanised Steel	
Y	5	STREET LIGHTING	WELHOLME ROAD	GRIMSBY	526651.78	408457.81	1989		60130	1 Urbis LED	Teceo 48 LED 500mA	79 Watts	8.00 Metres	Galvanised Steel	
Y	6	STREET LIGHTING	WELHOLME ROAD	GRIMSBY	526680.32	408470.97	1957		60131	1 Urbis LED	Teceo 48 LED 500mA	79 Watts	8.00 Metres	Steel	
Y	7	STREET LIGHTING	WELHOLME ROAD	GRIMSBY	526715.85	408466.55	1957		60132	1 Urbis LED	Teceo 48 LED 500mA	79 Watts	8.00 Metres	Steel	
Y	8	STREET LIGHTING	WELHOLME ROAD	GRIMSBY	526751.57	408478.61	1957		60133	1 Urbis LED	Teceo 48 LED 500mA	79 Watts	8.00 Metres	Steel	
Y	9	STREET LIGHTING	WELHOLME ROAD	GRIMSBY	526789.31	408474.1	1957		60134	1 Urbis LED	Teceo 48 LED 500mA	79 Watts	8.00 Metres	Steel	
Y	10	STREET LIGHTING	WELHOLME ROAD	GRIMSBY	526821.4	408491.5			60135	1 Urbis LED	Teceo 48 LED 500mA	79 Watts	8.00 Metres	Steel	
Y	11	STREET LIGHTING	WELHOLME ROAD	GRIMSBY	526859.1	408487.5			60136	1 Urbis LED	Teceo 48 LED 500mA	79 Watts	8.00 Metres	Steel	
Y	12	STREET LIGHTING	WELHOLME ROAD	GRIMSBY	526884.2	408507			60137	1 Urbis LED	Teceo 48 LED 500mA	79 Watts	8.00 Metres	Steel	
Y	13	STREET LIGHTING	WELHOLME ROAD	GRIMSBY	526916.9	408503.1			60138	1 Urbis LED	Teceo 48 LED 500mA	79 Watts	8.00 Metres	Steel	
Y	14	STREET LIGHTING	WELHOLME ROAD	GRIMSBY	526939.5	408521.9			60139	1 Urbis LED	Teceo 48 LED 500mA	79 Watts	8.00 Metres	Steel	
Y	15	STREET LIGHTING	WELHOLME ROAD	GRIMSBY	526969.3	408517.3			60140	1 Urbis LED	Teceo 48 LED 500mA	79 Watts	8.00 Metres	Steel	
Y	16	STREET LIGHTING	WELHOLME ROAD	GRIMSBY	526996.4	408537			60141	1 Urbis LED	Teceo 48 LED 500mA	79 Watts	8.00 Metres	Steel	
Y	17	STREET LIGHTING	WELHOLME ROAD	GRIMSBY	527026.8	408533.1			60142	1 Urbis LED	Teceo 48 LED 500mA	79 Watts	8.00 Metres	Steel	
Y	18	STREET LIGHTING	WELHOLME ROAD	GRIMSBY	527050.5	408539.5			60143	1 Urbis LED	Teceo 48 LED 500mA	79 Watts	8.00 Metres	Steel	
Y	19	STREET LIGHTING	WELHOLME ROAD	GRIMSBY	527080.6	408547.9			60144	1 Urbis LED	Teceo 48 LED 500mA	79 Watts	8.00 Metres	Steel	
Y	20	STREET LIGHTING	WELHOLME ROAD	GRIMSBY	527116.4	408570.2	2005		60145	1 Urbis LED	Teceo 48 LED 700mA	104 Watts	8.00 Metres	Stainless Steel	
Y	21	STREET LIGHTING	WELHOLME ROAD	GRIMSBY	527146.6	408577.9	2005		60146	1 Urbis LED	Teceo 48 LED 700mA	104 Watts	8.00 Metres	Stainless Steel	
Y	22	STREET LIGHTING	WELHOLME ROAD	GRIMSBY	527166.6	408583.2	2005		60147	1 Urbis LED	Teceo 48 LED 700mA	104 Watts	8.00 Metres	Stainless Steel	
Y	23	STREET LIGHTING	WELHOLME ROAD	GRIMSBY	527192.2	408590.35	1989		60148	1 Urbis LED	Teceo 48 LED 500mA	79 Watts	8.00 Metres	Galvanised Steel	
Y	24	STREET LIGHTING	WELHOLME ROAD	GRIMSBY	527222.4	408586.02	1989		60149	1 Urbis LED	Teceo 48 LED 500mA	79 Watts	8.00 Metres	Galvanised Steel	
Y	25	STREET LIGHTING	WELHOLME ROAD	GRIMSBY	527252.22	408594.12	1989		60150	1 Urbis LED	Teceo 48 LED 500mA	79 Watts	8.00 Metres	Galvanised Steel	
Y	26	STREET LIGHTING	WELHOLME ROAD	GRIMSBY	527269.9	408611.34	1993		60151	1 Urbis LED	Teceo 48 LED 500mA	79 Watts	8.00 Metres	Galvanised Steel	
Y	27	STREET LIGHTING	WELHOLME ROAD	GRIMSBY	527304.51	408608.3	1993		60152	1 Urbis LED	Teceo 48 LED 500mA	79 Watts	8.00 Metres	Galvanised Steel	
Y	28	STREET LIGHTING	WELHOLME ROAD	GRIMSBY	527330.66	408627.82	1993		60153	Urbis	AXIA 3.2 32 LED 630 mA	62 Watts	8.00 Metres	Galvanised Steel	
Y	29	STREET LIGHTING	WELHOLME ROAD	GRIMSBY	527359.01	408623.31	1993		60154	1 Urbis LED	Teceo 48 LED 500mA	79 Watts	8.00 Metres	Galvanised Steel	
Y	30	STREET LIGHTING	WELHOLME ROAD	GRIMSBY	527378.9	408628.64	1998		60155	1 Urbis LED	Teceo 48 LED 700mA	104 Watts	10.00 Metres	Galvanised Steel	
Y	31	STREET LIGHTING	WELHOLME ROAD	GRIMSBY	527426	408647.74	1998		60156	1 Urbis LED	Teceo 48 LED 700mA	104 Watts	10.00 Metres	Galvanised Steel	
Y	32	STREET LIGHTING	WELHOLME ROAD	GRIMSBY	527443.28	408652.41	2021	01/02/2021	68235	Urbis	Teceo 48 LED 500mA	79 Watts	8.00 Metres	Galvanised Steel	
Y	33	STREET LIGHTING	WELHOLME ROAD	GRIMSBY	527467.65	408648.69	1989		60158	1 Urbis LED	Teceo 48 LED 500mA	79 Watts	8.00 Metres	Galvanised Steel	
Y	34	STREET LIGHTING	WELHOLME ROAD	GRIMSBY	527496.74	408655.23	1989		60159	1 Urbis LED	Teceo 48 LED 500mA	79 Watts	8.00 Metres	Galvanised Steel	
Y	35	STREET LIGHTING	WELHOLME ROAD	GRIMSBY	527541.84	408669.68	1957		60160	Urbis	AXIA 3.2 32 LED 630 mA	62 Watts	8.00 Metres	Steel	
Y	36	STREET LIGHTING	WELHOLME ROAD	GRIMSBY	527577.56	408688	1957		60161	Urbis	AXIA 3.2 32 LED 630 mA	62 Watts	8.00 Metres	Steel	
Y	37	STREET LIGHTING	WELHOLME ROAD	GRIMSBY	527612.36	408686.9	1989		60162	1 Urbis LED	Teceo 48 LED 500mA	79 Watts	8.00 Metres	Galvanised Steel	
Y	38	STREET LIGHTING	WELHOLME ROAD	GRIMSBY	527642.74	408705.77	1957		60163	1 Urbis LED	Teceo 48 LED 500mA	79 Watts	8.00 Metres	Steel	
Y	39	STREET LIGHTING	WELHOLME ROAD	GRIMSBY	527679	408706.67	2021	09/08/2021	68438	Urbis	Teceo 48 LED 500mA	79 Watts	8.00 Metres	Galvanised Steel	
Y	40	STREET LIGHTING	WELHOLME ROAD	GRIMSBY	527710.86	408723.08	1957		60165	1 Urbis LED	Teceo 48 LED 500mA	79 Watts	8.00 Metres	Steel	
Y	41	STREET LIGHTING	WELHOLME ROAD	GRIMSBY	527748.82	408727.03	2021	09/08/2021	68852	Urbis	Teceo 48 LED 500mA	79 Watts	8.00 Metres	Galvanised Steel	
Y	42	STREET LIGHTING	WELHOLME ROAD	GRIMSBY	527780.34	408745.79	2021	09/08/2021	68853	Urbis	Teceo 48 LED 500mA	79 Watts	8.00 Metres	Galvanised Steel	
Y	43	STREET LIGHTING	WELHOLME ROAD	GRIMSBY	527819.49	408745.36	1957		60168	Urbis	AXIA 3.2 32 LED 630 mA	62 Watts	8.00 Metres	Steel	
Y	44	STREET LIGHTING	WELHOLME ROAD	GRIMSBY	527853.18	408764.14	1957		60169	1 Urbis LED	Teceo 48 LED 500mA	79 Watts	8.00 Metres	Steel	
Y	45	STREET LIGHTING	WELHOLME ROAD	GRIMSBY	527889.82	408764.96	1957		60170	Urbis	AXIA 3.2 32 LED 630 mA	62 Watts	8.00 Metres	Steel	
Y	46	STREET LIGHTING	WELHOLME ROAD	GRIMSBY	527923.7	408774.26	1957		60171	1 Urbis LED	Teceo 48 LED 500mA	79 Watts	8.00 Metres	Steel	
Y	47	STREET LIGHTING	WELHOLME ROAD	GRIMSBY	527957.84	408782.42	2007		60172	1 Urbis LED	Teceo 48 LED 500mA	79 Watts	8.00 Metres	Steel	
Y	48	STREET LIGHTING	WELHOLME ROAD	GRIMSBY	527556.52	408663.54	2010		49492	1 Urbis LED	Teceo 16 LED 500mA	28 Watts	6.00 Metres	Steel	
Y	49	STREET LIGHTING	WELHOLME ROAD	GRIMSBY	527537.25	408657.71	2010		49493	1 Urbis LED	Teceo 16 LED 500mA	28 Watts	6.00 Metres	Steel	
Y	50	STREET LIGHTING	WELHOLME ROAD	GRIMSBY	527535.35	408634.75	2010		49494	1 Urbis LED	Teceo 16 LED 500mA	28 Watts	6.00 Metres	Steel	
Y	51	STREET LIGHTING	WELHOLME ROAD	GRIMSBY	527535.57	408615.03	2010		49495	1 Urbis LED	Teceo 16 LED 500mA	28 Watts	6.00 Metres	Steel	
Y	1	STREET LIGHTING	HIGHFIELD AVENUE	GRIMSBY	527384.75	408615.83	1998		50720	Urbis	Axia 8 LED 350mA	10 Watts	5.00 Metres	Steel	
Y	2	STREET LIGHTING	HIGHFIELD AVENUE	GRIMSBY	527390.86	408593.61	1998		50721	Urbis	Axia 8 LED 350mA	10 Watts	5.00 Metres	Steel	
Y	3	STREET LIGHTING	HIGHFIELD AVENUE	GRIMSBY	527397.31	408570.51	1998		50722	Urbis	Axia 8 LED 350mA	10 Watts	5.00 Metres	Steel	
Y	4	STREET LIGHTING	HIGHFIELD AVENUE	GRIMSBY	527405.04	408542.98	1998		50723	Urbis	Axia 8 LED 350mA	10 Watts	5.00 Metres	Steel	
Y	5	STREET LIGHTING	HIGHFIELD AVENUE	GRIMSBY	527412.03	408517.58	1998		50724	Urbis	Axia 8 LED 350mA	10 Watts	5.00 Metres	Steel	
Y	6	STREET LIGHTING	HIGHFIELD AVENUE	GRIMSBY	527418.29	408494.01	1998		50725	Urbis	Axia 8 LED 350mA	10 Watts	5.00 Metres	Steel	
Y	7	STREET LIGHTING	HIGHFIELD AVENUE	GRIMSBY	527424.19	408473.2	1998		50726	Urbis	Axia 8 LED 350mA	10 Watts	5.00 Metres	Steel	
Y	8	STREET LIGHTING	HIGHFIELD AVENUE	GRIMSBY	527430.45	408451.02	1998		50727	Urbis	Axia 8 LED 350mA	10 Watts	5.00 Metres	Steel	
Y	9	STREET LIGHTING	HIGHFIELD AVENUE	GRIMSBY	527439.56	408444.62	1998		50728	Urbis	Teceo 24 LED 500mA	40 Watts	5.00 Metres	Steel	
Y	10	STREET LIGHTING	HIGHFIELD AVENUE	GRIMSBY	527437.44	408424.97	1998		50729	Urbis	Axia 8 LED 350mA	10 Watts	5.00 Metres	Steel	
Y	11	STREET LIGHTING	HIGHFIELD AVENUE	GRIMSBY	527443.33	408403.15	1998		50730	Urbis	Axia 8 LED 350mA	10 Watts	5.00 Metres	Steel	
Y	12	STREET LIGHTING	HIGHFIELD AVENUE	GRIMSBY	527449.41	408380.59	1998		50731	Urbis	Axia 8 LED 350mA	10 Watts	5.00 Metres	Steel	
Y	13	STREET LIGHTING	HIGHFIELD AVENUE	GRIMSBY	527456.4	408355.65	1998		50732	Urbis	Axia 8 LED 350mA	10 Watts	5.00 Metres	Steel	
Y	14	STREET LIGHTING	HIGHFIELD AVENUE	GRIMSBY	527462.3	408333.55	1998		50733	Urbis	Axia 8 LED 350mA	10 Watts	5.00 Metres	Steel	
Y	15	STREET LIGHTING	HIGHFIELD AVENUE	GRIMSBY	527468.37	408311.92	1998		50734	Urbis	Axia 8 LED 350mA	10 Watts	5.00 Metres	Steel	
Y	16	STREET LIGHTING	HIGHFIELD AVENUE	GRIMSBY	527475	408287.34	1998		50735	Urbis	Axia 8 LED 350mA	10 Watts	5.00 Metres	Steel	
Y	17	STREET LIGHTING	HIGHFIELD AVENUE	GRIMSBY	527481.08	408265.16	1998		50736	Urbis	Axia 8 LED 350mA	10 Watts	5.00 Metres	Steel	
Y	18	STREET LIGHTING	HIGHFIELD AVENUE	GRIMSBY	527486.97	408243.06	1998		50737	Urbis	Axia 8 LED 350mA	10 Watts	5.00 Metres	Steel	
Y	19	STREET LIGHTING	HIGHFIELD AVENUE	GRIMSBY	527494.88	408215.17	1998		50738	Urbis	Axia 8 LED 350mA	10 Watts	5.00 Metres	Steel	
Y	20	STREET LIGHTING	HIGHFIELD AVENUE	GRIMSBY	527501.14	408192.25	1998		50739	Urbis	Axia 8 LED 350mA	10 Watts	5.00 Metres	Steel	
Y	21	STREET LIGHTING	HIGHFIELD AVENUE	GRIMSBY	527508.69	408165.27	1998		50740	Urbis	Axia 8 LED 350mA	10 Watts	5.00 Metres	Steel	
Y	22	STREET LIGHTING	HIGHFIELD AVENUE	GRIMSBY	527514.58	408144.01	1998		50741	Urbis	Axia 8 LED 350mA	10 Watts	5.00 Metres	Steel	
Y	23	STREET LIGHTING	HIGHFIELD AVENUE	GRIMSBY	527520.84	408122.56	1998		50742	Urbis	Axia 8 LED 350mA	10 Watts	5.00 Metres	Steel	
Y	1	STREET LIGHTING	ALGERNON STREET	GRIMSBY	527644.88	408238.76	2002		43064	1 Urbis LED	Axia 16 LED 500mA	28 Watts	6.00 Metres	Stainless Steel	
Y	2	STREET LIGHTING	ALGERNON STREET	GRIMSBY	527676.76	408236.67	2002		43065	1 Urbis LED	Axia 16 LED 500mA	28 Watts	6.00 Metres	Stainless Steel	
Y	3	STREET LIGHTING	ALGERNON STREET	GRIMSBY	527693.59	408253.73	2002		43066	1 Urbis LED	Axia 16 LED 500mA	28 Watts	6.00 Metres	Stainless Steel	
Y	4	STREET LIGHTING	ALGERNON STREET	GRIMSBY	527728.03	408250.31	2002		43067	1 Urbis LED	Axia 16 LED 500mA	28 Watts	6.00 Metres	Stainless Steel	
Y	5	STREET LIGHTING	ALGERNON STREET	GRIMSBY	527749.23	408267.84	2002		43068	1 Urbis LED	Axia 16 LED 500mA	28 Watts	6.00 Metres	Stainless Steel	
Y	6	STREET LIGHTING	ALGERNON STREET	GRIMSBY	527782.32	408267.69	2002		43069	1 Urbis LED	Axia 16 LED 500mA	28 Watts	6.00 Metres	Stainless Steel	
Y	7	STREET LIGHTING	ALGERNON STREET	GRIMSBY	527807.9	408285.07	2002		43070	1 Urbis LED	Axia 16 LED 500mA	28 Watts	6.00 Metres	Stainless Steel	
Y	8	STREET LIGHTING	ALGERNON STREET	GRIMSBY	527832.28	408291.25	2002		43071	1 Urbis LED	Axia 16 LED 500mA	28 Watts	6.00 Metres	Stainless Steel	
Y	9	STREET LIGHTING	ALGERNON STREET	GRIMSBY	527855.45	408298.13	2002		43072	1 Urbis LED	Axia 16 LED 500mA	28 Watts	6.00 Metres	Stainless Steel	
Y	10	STREET LIGHTING	ALGERNON STREET	GRIMSBY	527880.66	408293.82	2002		43073	1 Urbis LED	Axia 16 LED 500mA	28 Watts	6.00 Metres	Stainless Steel	
Y	11	STREET LIGHTING	ALGERNON STREET	GRIMSBY	527907	408300.24	2002		43074	1 Urbis LED	Axia 16 LED 500mA	28 Watts	6.00 Metres	Stainless Steel	
Y	12	STREET LIGHTING	ALGERNON STREET	GRIMSBY	527937.87	408309.92	2002		43075	1 Urbis LED	Axia 16 LED 500mA	28 Watts	6.00 Metres	Stainless Steel	
Y	1	STREET LIGHTING	BEMPTON GROVE	GRIMSBY	528243.87	408245.06	2009		44027	1 Urbis LED	Axia 16 LED 500mA	28 Watts	6.00 Metres	Steel	
Y	2	STREET LIGHTING	BEMPTON GROVE	GRIMSBY	528267.69	408254.47	2009		44028	1 Urbis LED	Axia 16 LED 500mA	28 Watts	6.00 Metres	Steel	
Y	3	STREET LIGHTING	BEMPTON GROVE	GRIMSBY	528290.19	408267.39	2009		44029	1 Urbis LED	Axia 16 LED 500mA	28 Watts	6.00 Metres	Steel	
Y	1	STREET LIGHTING	BEVERLEY CRESCENT	GRIMSBY	528437.84	408031.54	2002		44111	1 Urbis LED	Axia 16 LED 500mA	28 Watts	6.00 Metres	Stainless Steel	
Y	2	STREET LIGHTING	BEVERLEY CRESCENT	GRIMSBY	528402.66	408033.26	2002		44112	1 Urbis LED	Axia 16 LED 500mA	28 Watts	6.00 Metres	Stainless Steel	
Y	3	STREET LIGHTING	BEVERLEY CRESCENT	GRIMSBY	528372.87	408025.14	2002		44113	1 Urbis LED	Axia 16 LED 500mA	28 Watts	6.00 Metres	Stainless Steel	
Y	4	STREET LIGHTING	BEVERLEY CRESCENT	GRIMSBY	528344.88	408039.6	2002		44114	1 Urbis LED	Axia 16 LED 500mA	28 Watts	6.00 Metres	Stainless Steel	
Y	5	STREET LIGHTING	BEVERLEY CRESCENT	GRIMSBY	528310.52	408035.69	2002		44115	1 Urbis LED	Axia 16 LED 500mA	28 Watts	6.00 Metres	Stainless Steel	
Y	6	STREET LIGHTING	BEVERLEY CRESCENT	GRIMSBY	528275.32	408046.06	2001		44116	1 Urbis LED	Axia 16 LED 500mA	28 Watts	6.00 Metres	Galvanised Steel	
Y	7	STREET LIGHTING	BEVERLEY CRESCENT	GRIMSBY	528240.28	408065.35	2002		44117	1 Urbis LED	Axia 16 LED 500mA	28 Watts	6.00 Metres	Stainless Steel	
Y	8	STREET LIGHTING	BEVERLEY CRESCENT	GRIMSBY	528204.62	408068.68	2002		44118	1 Urbis LED	Axia 16 LED 500mA	28 Watts	6.00 Metres	Stainless Steel	
Y	9	STREET LIGHTING	BEVERLEY CRESCENT	GRIMSBY	528181.54	408089.24	1997		44119	1 Urbis LED	Axia 16 LED 500mA	28 Watts	6.00 Metres	Galvanised Steel	
Y	10	STREET LIGHTING	BEVERLEY CRESCENT	GRIMSBY	528162.03	408109.08	1997		44120	1 Urbis LED	Axia 16 LED 500mA	28 Watts	6.00 Metres	Galvanised Steel	
Y	11	STREET LIGHTING	BEVERLEY CRESCENT	GRIMSBY	528133.31	408123.55	2002		44121	1 Urbis LED	Axia 16 LED 500mA	28 Watts	6.00 Metres	Stainless Steel	
Y	12	STREET LIGHTING	BEVERLEY CRESCENT	GRIMSBY	528117.33	408147.09	2002		44122	1 Urbis LED	Axia 16 LED 500mA	28 Watts	6.00 Metres	Stainless Steel	
Y	13	STREET LIGHTING	BEVERLEY CRESCENT	GRIMSBY	528123.69	408177.4	2002		44123	1 Urbis LED	Axia 16 LED 500mA	28 Watts	6.00 Metres	Stainless Steel	

Y	14	STREET LIGHTING	BEVERLEY CRESCENT	GRIMSBY	528108.78	408211.33	2002		44124	1 Urbis LED	Axia 16 LED 500mA	28 Watts	6.00 Metres	Stainless Steel	
Y	15	STREET LIGHTING	BEVERLEY CRESCENT	GRIMSBY	528118.36	408245.33	2002		44125	1 Urbis LED	Axia 16 LED 500mA	28 Watts	6.00 Metres	Stainless Steel	
Y	16	STREET LIGHTING	BEVERLEY CRESCENT	GRIMSBY	528117.16	408277.2	2002		44126	1 Urbis LED	Axia 16 LED 500mA	28 Watts	6.00 Metres	Stainless Steel	
Y	17	STREET LIGHTING	BEVERLEY CRESCENT	GRIMSBY	528147.39	408291.76	2002		44127	1 Urbis LED	Axia 16 LED 500mA	28 Watts	6.00 Metres	Stainless Steel	
Y	18	STREET LIGHTING	BEVERLEY CRESCENT	GRIMSBY	528163.88	408323.81	2002		44128	1 Urbis LED	Axia 16 LED 500mA	28 Watts	6.00 Metres	Stainless Steel	
Y	19	STREET LIGHTING	BEVERLEY CRESCENT	GRIMSBY	528194.12	408337.36	2002		44129	1 Urbis LED	Axia 16 LED 500mA	28 Watts	6.00 Metres	Stainless Steel	
Y	20	STREET LIGHTING	BEVERLEY CRESCENT	GRIMSBY	528206.42	408363.86	2002		44130	1 Urbis LED	Axia 16 LED 500mA	28 Watts	6.00 Metres	Stainless Steel	
Y	21	STREET LIGHTING	BEVERLEY CRESCENT	GRIMSBY	528238.59	408379.55	2002		44131	1 Urbis LED	Axia 16 LED 500mA	28 Watts	6.00 Metres	Stainless Steel	
Y	22	STREET LIGHTING	BEVERLEY CRESCENT	GRIMSBY	528266.68	408385.89	2000		44132	1 Urbis LED	Axia 16 LED 500mA	28 Watts	6.00 Metres	Galvanised Steel	
Y	23	STREET LIGHTING	BEVERLEY CRESCENT	GRIMSBY	528296.03	408391.04	2002		44133	1 Urbis LED	Axia 16 LED 500mA	28 Watts	6.00 Metres	Stainless Steel	
Y	1	STREET LIGHTING	CARNABY GROVE	GRIMSBY	528247.34	408363.06	2009		45270	Urbis	Axia 16 LED 350mA	19 Watts	6.00 Metres	Steel	
Y	2	STREET LIGHTING	CARNABY GROVE	GRIMSBY	528254.65	408341.42	2009		45271	Urbis	Axia 16 LED 350mA	19 Watts	6.00 Metres	Steel	
Y	3	STREET LIGHTING	CARNABY GROVE	GRIMSBY	528257.33	408319.21	2009		45272	1 Urbis LED	Axia 16 LED 500mA	28 Watts	6.00 Metres	Steel	
Y	1	STREET LIGHTING	DAVID STREET	GRIMSBY	527596.7	408403.68	1992		47374	Urbis	Axia 16 LED 350mA	19 Watts	6.00 Metres	Galvanised Steel	
Y	2	STREET LIGHTING	DAVID STREET	GRIMSBY	527618.86	408397.48	1992		47375	Urbis	Axia 16 LED 350mA	19 Watts	6.00 Metres	Galvanised Steel	
Y	3	STREET LIGHTING	DAVID STREET	GRIMSBY	527637.08	408415.01	1992		47376	Urbis	Axia 16 LED 350mA	19 Watts	6.00 Metres	Galvanised Steel	
Y	4	STREET LIGHTING	DAVID STREET	GRIMSBY	527652.91	408406.79	1992		47377	Urbis	Axia 16 LED 350mA	19 Watts	6.00 Metres	Galvanised Steel	
Y	5	STREET LIGHTING	DAVID STREET	GRIMSBY	527671.64	408424.57	1992		47378	Urbis	Axia 16 LED 350mA	19 Watts	6.00 Metres	Galvanised Steel	
Y	6	STREET LIGHTING	DAVID STREET	GRIMSBY	527693.03	408418.05	1992		47379	Urbis	Axia 16 LED 350mA	19 Watts	6.00 Metres	Galvanised Steel	
Y	7	STREET LIGHTING	DAVID STREET	GRIMSBY	527706.58	408434.13	1992		47380	Urbis	Axia 16 LED 350mA	19 Watts	6.00 Metres	Galvanised Steel	
Y	8	STREET LIGHTING	DAVID STREET	GRIMSBY	527727.97	408427.61	1992		47381	Urbis	Axia 16 LED 350mA	19 Watts	6.00 Metres	Galvanised Steel	
Y	9	STREET LIGHTING	DAVID STREET	GRIMSBY	527742.27	408444.19	1992		47382	Urbis	Axia 16 LED 350mA	19 Watts	6.00 Metres	Galvanised Steel	
Y	10	STREET LIGHTING	DAVID STREET	GRIMSBY	527763.16	408437.55	1992		47383	Urbis	Axia 16 LED 350mA	19 Watts	6.00 Metres	Galvanised Steel	
Y	11	STREET LIGHTING	DAVID STREET	GRIMSBY	527790.88	408457.36	1999		47384	1 Urbis LED	Axia 16 LED 500mA	28 Watts	6.00 Metres	Galvanised Steel	
Y	12	STREET LIGHTING	DAVID STREET	GRIMSBY	527826.45	408454.89	1999		47385	1 Urbis LED	Axia 16 LED 500mA	28 Watts	6.00 Metres	Galvanised Steel	
Y	13	STREET LIGHTING	DAVID STREET	GRIMSBY	527851.25	408474.19	1999		47386	1 Urbis LED	Axia 16 LED 500mA	28 Watts	6.00 Metres	Galvanised Steel	
Y	14	STREET LIGHTING	DAVID STREET	GRIMSBY	527886.06	408471.47	1999		47387	1 Urbis LED	Axia 16 LED 500mA	28 Watts	6.00 Metres	Galvanised Steel	
Y	15	STREET LIGHTING	DAVID STREET	GRIMSBY	527910.11	408490.65	1999		47388	1 Urbis LED	Axia 16 LED 500mA	28 Watts	6.00 Metres	Galvanised Steel	
Y	16	STREET LIGHTING	DAVID STREET	GRIMSBY	527945.3	408500.21	1999		47389	1 Urbis LED	Axia 16 LED 500mA	28 Watts	6.00 Metres	Galvanised Steel	
Y	17	STREET LIGHTING	DAVID STREET	GRIMSBY	527960.99	408480.68	2007		47390	1 Urbis LED	Axia 16 LED 500mA	28 Watts	6.00 Metres	Steel	
Y	18	STREET LIGHTING	DAVID STREET	GRIMSBY	527966.36	408461.48	2007		47391	1 Urbis LED	Axia 16 LED 500mA	28 Watts	6.00 Metres	Steel	
Y	1	STREET LIGHTING	DENE ROAD	GRIMSBY	527454.81	407862.77	1992		47434	Urbis	Axia 16 LED 350mA	19 Watts	5.00 Metres	Galvanised Steel	
Y	2	STREET LIGHTING	DENE ROAD	GRIMSBY	527424.43	407860.05	1992		47435	Urbis	Axia 16 LED 350mA	19 Watts	5.00 Metres	Galvanised Steel	
Y	3	STREET LIGHTING	DENE ROAD	GRIMSBY	527405.44	407848.91	1992		47436	Urbis	Axia 16 LED 350mA	19 Watts	5.00 Metres	Galvanised Steel	
Y	4	STREET LIGHTING	DENE ROAD	GRIMSBY	527393.16	407876.57	1992		47437	Urbis	Axia 16 LED 350mA	19 Watts	5.00 Metres	Galvanised Steel	
Y	1	STREET LIGHTING	DIXON AVENUE	GRIMSBY	527446.96	407994.6	1996		47473	Urbis	Axia 16 LED 350mA	19 Watts	5.00 Metres	Galvanised Steel	
Y	2	STREET LIGHTING	DIXON AVENUE	GRIMSBY	527479.11	407995.67	1996		47474	Urbis	Axia 16 LED 350mA	19 Watts	5.00 Metres	Galvanised Steel	
Y	3	STREET LIGHTING	DIXON AVENUE	GRIMSBY	527506.96	408011.18	1996		47475	Urbis	Axia 16 LED 350mA	19 Watts	5.00 Metres	Galvanised Steel	
Y	4	STREET LIGHTING	DIXON AVENUE	GRIMSBY	527539.37	408017.95	1996		47476	Urbis	Axia 16 LED 350mA	19 Watts	5.00 Metres	Galvanised Steel	
Y	5	STREET LIGHTING	DIXON AVENUE	GRIMSBY	527539.87	407988.58	1996		47477	Urbis	Axia 16 LED 350mA	19 Watts	5.00 Metres	Galvanised Steel	
Y	6	STREET LIGHTING	DIXON AVENUE	GRIMSBY	527554.93	407961.18	1996		47478	Urbis	Axia 16 LED 350mA	19 Watts	5.00 Metres	Galvanised Steel	
Y	7	STREET LIGHTING	DIXON AVENUE	GRIMSBY	527524.3	407952.76	1996		47479	Urbis	Axia 16 LED 350mA	19 Watts	5.00 Metres	Galvanised Steel	
Y	8	STREET LIGHTING	DIXON AVENUE	GRIMSBY	527491.52	407951.18	1996		47480	Urbis	Axia 16 LED 350mA	19 Watts	5.00 Metres	Galvanised Steel	
Y	9	STREET LIGHTING	DIXON AVENUE	GRIMSBY	527461.14	407942.57	1996		47481	Urbis	Axia 16 LED 350mA	19 Watts	5.00 Metres	Galvanised Steel	
Y	1	STREET LIGHTING	DREW AVENUE	GRIMSBY	527516.4	407750	2001		47551	1 Urbis LED	Teceo 24 LED 500mA	40 Watts	6.00 Metres	Galvanised Steel	
Y	2	STREET LIGHTING	DREW AVENUE	GRIMSBY	527548	407743	2001		47552	1 Urbis LED	Teceo 24 LED 500mA	40 Watts	6.00 Metres	Galvanised Steel	
Y	3	STREET LIGHTING	DREW AVENUE	GRIMSBY	527583	407757	2001		47553	1 Urbis LED	Teceo 24 LED 500mA	40 Watts	6.00 Metres	Galvanised Steel	
Y	4	STREET LIGHTING	DREW AVENUE	GRIMSBY	527601	407735	2001		47554	1 Urbis LED	Teceo 24 LED 500mA	40 Watts	6.00 Metres	Galvanised Steel	
Y	5	STREET LIGHTING	DREW AVENUE	GRIMSBY	527618	407711	2001		47555	1 Urbis LED	Teceo 24 LED 500mA	40 Watts	6.00 Metres	Galvanised Steel	
Y	6	STREET LIGHTING	DREW AVENUE	GRIMSBY	527596	407694	2001		47556	1 Urbis LED	Teceo 24 LED 500mA	40 Watts	6.00 Metres	Galvanised Steel	
Y	7	STREET LIGHTING	DREW AVENUE	GRIMSBY	527563	407685	2001		47557	1 Urbis LED	Teceo 24 LED 500mA	40 Watts	6.00 Metres	Galvanised Steel	
Y	8	STREET LIGHTING	DREW AVENUE	GRIMSBY	527533	407688	2001		47558	1 Urbis LED	Teceo 24 LED 500mA	40 Watts	6.00 Metres	Galvanised Steel	
Y	1	STREET LIGHTING	FILEY ROAD	GRIMSBY	528276.87	408063.94	2009		48546	1 Urbis LED	Axia 16 LED 500mA	28 Watts	6.00 Metres	Steel	
Y	2	STREET LIGHTING	FILEY ROAD	GRIMSBY	528280.18	408093.71	2009		48547	1 Urbis LED	Axia 16 LED 500mA	28 Watts	6.00 Metres	Steel	
Y	3	STREET LIGHTING	FILEY ROAD	GRIMSBY	528273.25	408130.25	2009		48548	1 Urbis LED	Axia 16 LED 500mA	28 Watts	6.00 Metres	Steel	
Y	4	STREET LIGHTING	FILEY ROAD	GRIMSBY	528259.57	408161.44	2009		61577	1 Urbis LED	Axia 16 LED 500mA	28 Watts	6.00 Metres	Steel	
Y	4	STREET LIGHTING	FILEY ROAD	GRIMSBY	528259.57	408161.44	2009		62109	1 Urbis LED	Axia 16 LED 500mA	28 Watts	6.00 Metres	Steel	
Y	5	STREET LIGHTING	FILEY ROAD	GRIMSBY	528247.93	408190.98	2009		48549	1 Urbis LED	Axia 16 LED 500mA	28 Watts	6.00 Metres	Steel	
Y	6	STREET LIGHTING	FILEY ROAD	GRIMSBY	528243.64	408219.59	2009		48550	1 Urbis LED	Axia 16 LED 500mA	28 Watts	6.00 Metres	Steel	
Y	7	STREET LIGHTING	FILEY ROAD	GRIMSBY	528225.93	408243.01	2009		48551	1 Urbis LED	Axia 16 LED 500mA	28 Watts	6.00 Metres	Steel	
Y	8	STREET LIGHTING	FILEY ROAD	GRIMSBY	528214.03	408280.03	2009		48552	1 Urbis LED	Axia 16 LED 500mA	28 Watts	6.00 Metres	Steel	
Y	9	STREET LIGHTING	FILEY ROAD	GRIMSBY	528188.51	408307.75	2009		48553	1 Urbis LED	Axia 16 LED 500mA	28 Watts	6.00 Metres	Steel	
Y	1	STREET LIGHTING	GARTON GROVE	GRIMSBY	528087.6	408269.8	2002		49121	1 Urbis LED	Axia 16 LED 500mA	28 Watts	6.00 Metres	Stainless Steel	
Y	1	STREET LIGHTING	MIRFIELD ROAD	GRIMSBY	527499.15	407801.71	1997		53758	Urbis	Axia 16 LED 350mA	19 Watts	6.00 Metres	Galvanised Steel	
Y	2	STREET LIGHTING	MIRFIELD ROAD	GRIMSBY	527534.5	407803.92	1997		53759	Urbis	Axia 16 LED 350mA	19 Watts	6.00 Metres	Galvanised Steel	
Y	3	STREET LIGHTING	MIRFIELD ROAD	GRIMSBY	527568.19	407810.92	1997		53760	Urbis	Axia 16 LED 350mA	19 Watts	6.00 Metres	Galvanised Steel	
Y	4	STREET LIGHTING	MIRFIELD ROAD	GRIMSBY	527592.31	407818.19	1997		53761	Urbis	Axia 16 LED 350mA	19 Watts	6.00 Metres	Galvanised Steel	
Y	1	STREET LIGHTING	OAK AVENUE	GRIMSBY	527472.27	407794.25	1996		54292	Urbis	Axia 16 LED 350mA	19 Watts	5.00 Metres	Galvanised Steel	
Y	2	STREET LIGHTING	OAK AVENUE	GRIMSBY	527440.97	407791.03	1996		54293	Urbis	Axia 16 LED 350mA	19 Watts	5.00 Metres	Galvanised Steel	
Y	1	STREET LIGHTING	PEAKS LANE	GRIMSBY	527686.45	408058.91	2007		54843	1 Urbis LED	Teceo 48 LED 500mA	79 Watts	8.00 Metres	Steel	
Y	2	STREET LIGHTING	PEAKS LANE	GRIMSBY	527695.82	408024.31	2007		54844	1 Urbis LED	Teceo 48 LED 500mA	79 Watts	8.00 Metres	Steel	
Y	3	STREET LIGHTING	PEAKS LANE	GRIMSBY	527707.06	407985.66	2007		54845	1 Urbis LED	Teceo 32 LED 500mA	52 Watts	8.00 Metres	Steel	
Y	4	STREET LIGHTING	PEAKS LANE	GRIMSBY	527717.67	407952.26	2007		54846	1 Urbis LED	Teceo 32 LED 500mA	52 Watts	8.00 Metres	Steel	
Y	5	STREET LIGHTING	PEAKS LANE	GRIMSBY	527725.14	407925.52	2007		54847	1 Urbis LED	Teceo 32 LED 500mA	52 Watts	8.00 Metres	Steel	
Y	6	STREET LIGHTING	PEAKS LANE	GRIMSBY	527734.51	407887.1	2007		54848	1 Urbis LED	Teceo 32 LED 500mA	52 Watts	8.00 Metres	Steel	
Y	7	STREET LIGHTING	PEAKS LANE	GRIMSBY	527743.9	407854.15	2007		54849	1 Urbis LED	Teceo 32 LED 500mA	52 Watts	8.00 Metres	Steel	
Y	8	STREET LIGHTING	PEAKS LANE	GRIMSBY	527752.41	407824.15	2007		54850	1 Urbis LED	Teceo 32 LED 500mA	52 Watts	8.00 Metres	Steel	
Y	9	STREET LIGHTING	PEAKS LANE	GRIMSBY	527762.52	407788.44	2007		54851	1 Urbis LED	Teceo 32 LED 500mA	52 Watts	8.00 Metres	Steel	
Y	10	STREET LIGHTING	PEAKS LANE	GRIMSBY	527769.92	407760.71	2007		54852	1 Urbis LED	Teceo 32 LED 500mA	52 Watts	8.00 Metres	Steel	
Y	11	STREET LIGHTING	PEAKS LANE	GRIMSBY	527779.92	407727.61	2007		54853	1 Urbis LED	Teceo 32 LED 500mA	52 Watts	8.00 Metres	Steel	
Y	12	STREET LIGHTING	PEAKS LANE	GRIMSBY	527790.31	407692.34	2007		54854	1 Urbis LED	Teceo 32 LED 500mA	52 Watts	8.00 Metres	Steel	
Y	13	STREET LIGHTING	PEAKS LANE	GRIMSBY	527800.67	407657.59	2007		54855	1 Urbis LED	Teceo 32 LED 500mA	52 Watts	8.00 Metres	Steel	
Y	14	STREET LIGHTING	PEAKS LANE	GRIMSBY	527809.7	407622.7	2014		62982	1 Urbis LED	Teceo 24 LED 500mA	40 Watts	6.00 Metres	Galvanised Steel	
Y	15	STREET LIGHTING	PEAKS LANE	GRIMSBY	527819.9	407591.6	2014		62983	1 Urbis LED	Teceo 24 LED 500mA	40 Watts	6.00 Metres	Galvanised Steel	
Y	16	STREET LIGHTING	PEAKS LANE	GRIMSBY	527827.1	407566.6	2014		62984	1 Urbis LED	Teceo 24 LED 500mA	40 Watts	6.00 Metres	Galvanised Steel	
Y	17	STREET LIGHTING	PEAKS LANE	GRIMSBY	527830.1	407545.4	2014		62985	1 Urbis LED	Teceo 24 LED 500mA	40 Watts	6.00 Metres	Galvanised Steel	
Y	18	STREET LIGHTING	PEAKS LANE	GRIMSBY	527840.7	407506.4	2014		62986	1 Urbis LED	Teceo 24 LED 500mA	40 Watts	6.00 Metres	Galvanised Steel	
Y	19	STREET LIGHTING	PEAKS LANE	GRIMSBY	527821.1	407489.7	2014		62987	1 Urbis LED	Teceo 24 LED 500mA	40 Watts	6.00 Metres	Galvanised Steel	
Y	20	STREET LIGHTING	PEAKS LANE	GRIMSBY	527790.1	407476.5	2014		62988	1 Urbis LED	Teceo 24 LED 500mA	40 Watts	6.00 Metres	Galvanised Steel	
Y	21	STREET LIGHTING	PEAKS LANE	GRIMSBY	527753.7	407475.8	2014		62989	1 Urbis LED	Teceo 24 LED 500mA	40 Watts	6.00 Metres	Galvanised Steel	
Y	1	STREET LIGHTING	BRUNEL CLOSE	GRIMSBY	527835.56	407942.55	2001		61467	Urbis	Axia 16 LED 350mA	19 Watts	5.00 Metres	Galvanised Steel	
Y	2	STREET LIGHTING	BRUNEL CLOSE	GRIMSBY	527831.76	407963.39	2001		61468	Urbis	Axia 16 LED 350mA	19 Watts	5.00 Metres	Galvanised Steel	
Y	3	STREET LIGHTING	BRUNEL CLOSE	GRIMSBY	527814.25	407989.25	2000		61469	Urbis	Axia 16 LED 350mA	19 Watts	5.00 Metres	Galvanised Steel	
Y	4	STREET LIGHTING	BRUNEL CLOSE	GRIMSBY	527813.01	408012.65	2000		61470	Urbis	Axia 16 LED 350mA	19 Watts	5.00 Metres	Galvanised Steel	
Y	5	STREET LIGHTING	BRUNEL CLOSE	GRIMSBY	527792.23	408028.15	2001		61471	Urbis	Axia 16 LED 350mA	19 Watts	5.00 Metres	Galvanised Steel	
Y	6	STREET LIGHTING	BRUNEL CLOSE	GRIMSBY	527804.36	408044.66	2001		61472	Urbis	Axia 16 LED 350mA	19 Watts	5.00 Metres	Galvanised Steel	
Y	7	STREET LIGHTING	BRUNEL CLOSE	GRIMSBY	527801.93	408062	2001		61473	Urbis	Axia 8 LED 350mA	10 Watts	5.00 Metres	Galvanised Steel	
Y	1	STREET LIGHTING	HAIGH COURT	GRIMSBY	527759.07	407930.11	2000		61639	Urbis	Axia 16 LED 350mA	19 Watts	5.00 Metres	Galvanised Steel	
Y	2	STREET LIGHTING	HAIGH COURT	GRIMSBY	527750.43	407956.76	2000		61640	Urbis	Axia 16 LED 350mA	19 Watts	5.00 Metres	Galvanised Steel	
Y	3	STREET LIGHTING	HAIGH COURT	GRIMSBY	527755.13	407986.6	2000		62173	Urbis	Axia 16 LED 350mA	19 Watts	5.00 Metres	Galvanised Steel	
Y	1	STREET LIGHTING	LEA DRIVE	GRIMSBY	527738.07	407914.95	2001		61782	Urbis	Axia 16 LED 350mA	19 Watts	5.00 Metres	Galvanised Steel	
Y	2	STREET LIGHTING	LEA DRIVE	GRIMSBY	527765.28	407911.92	2001		61783	Urbis	Axia 16 LED 350mA	19 Watts	5.00 Metres	Galvanised Steel	
Y	3	STREET LIGHTING	LEA DRIVE	GRIMSBY	527791.08	407929.09	2000		61784	Urbis	Axia 16 LED 350mA	19 Watts	5.00 Metres	Galvanised Steel	
Y	4	STREET LIGHTING	LEA DRIVE	GRIMSBY	527815.49	407938.84	2000		62317	Urbis	Axia 16 LED 350mA	19 Watts	5.00 Metres	Galvanised Steel	
Y	1	STREET LIGHTING	PORTLAND AVENUE	GRIMSBY	527115.05	408050.64	2015	30/07/2015	55558	1 Urbis LED	Axia 16 LED 500mA	28 Watts	6.00 Metres	Galvanised Steel	
Y	2	STREET LIGHTING	PORTLAND AVENUE	GRIMSBY	527116.6	408025.97	2004		55559	1 Urbis LED	Axia 16 LED 500mA	28 Watts	6.00 Metres	Stainless Steel	
Y	3	STREET LIGHTING	PORTLAND AVENUE	GRIMSBY	527130.27	407996.48	2004		55560	1 Urbis LED	Axia 16 LED 500mA	28 Watts	6.00 Metres	Stainless Steel	
Y	4	STREET LIGHTING	PORTLAND AVENUE	GRIMSBY	527134.76	407957.43	2004		55561	1 Urbis LED	Axia 16 LED 500mA	28 Watts	6.00 Metres	Stainless Steel	
Y	5	STREET LIGHTING	PORTLAND AVENUE	GRIMSBY	527138.8	407920.29	1998		55562	1 Urbis LED	Axia 16 LED 500mA	28 Watts	5.00 Metres	Galvanised Steel	
Y	1	STREET LIGHTING	PORTLAND PLACE	GRIMSBY	527154.73	407968.84	2003		55563	1 Urbis LED	Axia 16 LED 500mA	28 Watts	6.00 Metres	Stainless Steel	

Y	2	STREET LIGHTING	PORTLAND PLACE	GRIMSBY	527195.6	407989.19	1992		55564	1 Urbis LED	Axia 16 LED 500mA	28 Watts	6.00 Metres	Galvanised Steel	
Y	3	STREET LIGHTING	PORTLAND PLACE	GRIMSBY	527230.03	407982.92	1992		55565	1 Urbis LED	Axia 16 LED 500mA	28 Watts	6.00 Metres	Galvanised Steel	
Y	4	STREET LIGHTING	PORTLAND PLACE	GRIMSBY	527256.73	407982.46	1992		55566	1 Urbis LED	Axia 16 LED 500mA	28 Watts	6.00 Metres	Galvanised Steel	
Y	5	STREET LIGHTING	PORTLAND PLACE	GRIMSBY	527282.69	407989.46	1992		55567	1 Urbis LED	Axia 16 LED 500mA	28 Watts	6.00 Metres	Galvanised Steel	
Y	6	STREET LIGHTING	PORTLAND PLACE	GRIMSBY	527313.44	407988.81	1992		55568	1 Urbis LED	Axia 16 LED 500mA	28 Watts	6.00 Metres	Galvanised Steel	
Y	7	STREET LIGHTING	PORTLAND PLACE	GRIMSBY	527221.68	408021.16	2015	30/07/2015	55569	1 Urbis LED	Axia 16 LED 500mA	28 Watts	6.00 Metres	Galvanised Steel	
Y	1	STREET LIGHTING	QUINTON ROAD	GRIMSBY	527484.98	407854.86	2005		55850	1 Urbis LED	Axia 16 LED 500mA	28 Watts	6.00 Metres	Stainless Steel	
Y	2	STREET LIGHTING	QUINTON ROAD	GRIMSBY	527516.34	407863.3	2005		55851	1 Urbis LED	Axia 16 LED 500mA	28 Watts	6.00 Metres	Stainless Steel	
Y	3	STREET LIGHTING	QUINTON ROAD	GRIMSBY	527555.98	407870.84	2007		55852	1 Urbis LED	Axia 16 LED 500mA	28 Watts	6.00 Metres	Stainless Steel	
Y	1	STREET LIGHTING	RECTO AVENUE	GRIMSBY	527725.78	408164.87	1993		55938	Urbis	Axia 16 LED 350mA	19 Watts	6.00 Metres	Galvanised Steel	
Y	2	STREET LIGHTING	RECTO AVENUE	GRIMSBY	527731.86	408142.97	1993		55939	Urbis	Axia 16 LED 350mA	19 Watts	6.00 Metres	Galvanised Steel	
Y	3	STREET LIGHTING	RECTO AVENUE	GRIMSBY	527727.68	408117.84	1993		55940	Urbis	Axia 16 LED 350mA	19 Watts	6.00 Metres	Galvanised Steel	
Y	4	STREET LIGHTING	RECTO AVENUE	GRIMSBY	527733.88	408095.63	1993		55941	Urbis	Axia 16 LED 350mA	19 Watts	6.00 Metres	Galvanised Steel	
Y	1	STREET LIGHTING	REMILLO AVENUE	GRIMSBY	527632.69	408158.23	1999		55993	Urbis	Axia 16 LED 350mA	19 Watts	6.00 Metres	Steel	
Y	2	STREET LIGHTING	REMILLO AVENUE	GRIMSBY	527611.34	408152.9	1999		55994	Urbis	Axia 16 LED 350mA	19 Watts	6.00 Metres	Steel	
Y	3	STREET LIGHTING	REMILLO AVENUE	GRIMSBY	527580.96	408144.7	1999		55995	Urbis	Axia 16 LED 350mA	19 Watts	6.00 Metres	Steel	
Y	4	STREET LIGHTING	REMILLO AVENUE	GRIMSBY	527557.76	408140.93	1999		55996	Urbis	Axia 16 LED 350mA	19 Watts	6.00 Metres	Steel	
Y	1	STREET LIGHTING	REPORTO AVENUE	GRIMSBY	527914.89	408214.67	1999		56008	Urbis	Axia 16 LED 350mA	19 Watts	6.00 Metres	Aluminium	
Y	2	STREET LIGHTING	REPORTO AVENUE	GRIMSBY	527910.34	408189.04	1999		56009	Urbis	Axia 16 LED 350mA	19 Watts	6.00 Metres	Aluminium	
Y	3	STREET LIGHTING	REPORTO AVENUE	GRIMSBY	527927.68	408162.39	1999		56010	Urbis	Axia 16 LED 350mA	19 Watts	6.00 Metres	Aluminium	
Y	4	STREET LIGHTING	REPORTO AVENUE	GRIMSBY	527924.13	408133.41	1999		56011	Urbis	Axia 16 LED 350mA	19 Watts	6.00 Metres	Aluminium	
Y	1	STREET LIGHTING	RESPONSO AVENUE	GRIMSBY	527884.77	408111.64	1998		56012	Urbis	Axia 16 LED 350mA	19 Watts	6.00 Metres	Aluminium	
Y	2	STREET LIGHTING	RESPONSO AVENUE	GRIMSBY	527907.43	408117.4	1998		56013	Urbis	Axia 16 LED 350mA	19 Watts	6.00 Metres	Aluminium	
Y	3	STREET LIGHTING	RESPONSO AVENUE	GRIMSBY	527932.49	408112.4	1998		56014	Urbis	Axia 16 LED 350mA	19 Watts	6.00 Metres	Aluminium	
Y	4	STREET LIGHTING	RESPONSO AVENUE	GRIMSBY	527948.82	408127.33	2009		56015	Urbis	Axia 16 LED 350mA	19 Watts	6.00 Metres	Steel	
Y	1	STREET LIGHTING	REVIGO AVENUE	GRIMSBY	527787.05	408179.49	1993		56030	Urbis	Axia 16 LED 350mA	19 Watts	6.00 Metres	Galvanised Steel	
Y	2	STREET LIGHTING	REVIGO AVENUE	GRIMSBY	527792.87	408157.78	1993		56031	Urbis	Axia 16 LED 350mA	19 Watts	6.00 Metres	Galvanised Steel	
Y	3	STREET LIGHTING	REVIGO AVENUE	GRIMSBY	527799.2	408136.33	1993		56032	Urbis	Axia 16 LED 350mA	19 Watts	6.00 Metres	Galvanised Steel	
Y	4	STREET LIGHTING	REVIGO AVENUE	GRIMSBY	527793.88	408115.76	1993		56033	Urbis	Axia 16 LED 350mA	19 Watts	6.00 Metres	Galvanised Steel	
Y	5	STREET LIGHTING	REVIGO AVENUE	GRIMSBY	527800.47	408092.15	1993		56034	Urbis	Axia 16 LED 350mA	19 Watts	6.00 Metres	Galvanised Steel	
Y	1	STREET LIGHTING	RIALTO AVENUE	GRIMSBY	527686.67	408163.28	1985	01/01/1985	56047	1 Urbis LED	Axia 16 LED 500mA	28 Watts	6.00 Metres	Steel	
Y	2	STREET LIGHTING	RIALTO AVENUE	GRIMSBY	527716.54	408180.74	2015	30/07/2015	56048	1 Urbis LED	Axia 16 LED 500mA	28 Watts	6.00 Metres	Galvanised Steel	
Y	3	STREET LIGHTING	RIALTO AVENUE	GRIMSBY	527749.45	408180.3	2015	30/07/2015	56049	1 Urbis LED	Axia 16 LED 500mA	28 Watts	6.00 Metres	Galvanised Steel	
Y	4	STREET LIGHTING	RIALTO AVENUE	GRIMSBY	527777.7	408199	2004		56050	1 Urbis LED	Axia 16 LED 500mA	28 Watts	6.00 Metres	Stainless Steel	
Y	5	STREET LIGHTING	RIALTO AVENUE	GRIMSBY	527805.48	408206.95	2004		56051	1 Urbis LED	Axia 16 LED 500mA	28 Watts	6.00 Metres	Stainless Steel	
Y	6	STREET LIGHTING	RIALTO AVENUE	GRIMSBY	527858.94	408221.69	1999		56052	1 Urbis LED	Axia 16 LED 500mA	28 Watts	6.00 Metres	Galvanised Steel	
Y	7	STREET LIGHTING	RIALTO AVENUE	GRIMSBY	527883.88	408228.66	1999		56053	1 Urbis LED	Axia 16 LED 500mA	28 Watts	6.00 Metres	Galvanised Steel	
Y	8	STREET LIGHTING	RIALTO AVENUE	GRIMSBY	527917.17	408225.81	1999		56054	1 Urbis LED	Axia 16 LED 500mA	28 Watts	6.00 Metres	Galvanised Steel	
Y	9	STREET LIGHTING	RIALTO AVENUE	GRIMSBY	527937.3	408243.34	1999		56055	1 Urbis LED	Axia 16 LED 500mA	28 Watts	6.00 Metres	Galvanised Steel	
Y	1	STREET LIGHTING	RUDHAM AVENUE	GRIMSBY	527482.15	407740.42	2006		56370	1 Urbis LED	Axia 16 LED 500mA	28 Watts	6.00 Metres	Stainless Steel	
Y	2	STREET LIGHTING	RUDHAM AVENUE	GRIMSBY	527448.9	407739.8	2006		56371	1 Urbis LED	Axia 16 LED 500mA	28 Watts	6.00 Metres	Stainless Steel	
Y	3	STREET LIGHTING	RUDHAM AVENUE	GRIMSBY	527447.86	407706.05	2006		56372	1 Urbis LED	Axia 16 LED 500mA	28 Watts	6.00 Metres	Stainless Steel	
Y	4	STREET LIGHTING	RUDHAM AVENUE	GRIMSBY	527465.74	407675.21	2006		56373	1 Urbis LED	Axia 16 LED 500mA	28 Watts	6.00 Metres	Stainless Steel	
Y	1	STREET LIGHTING	SALTBURN GROVE	GRIMSBY	528130.87	408210.38	2004		56504	Urbis	Axia 16 LED 350mA	19 Watts	5.00 Metres	Stainless Steel	
Y	2	STREET LIGHTING	SALTBURN GROVE	GRIMSBY	528149.42	408211.82	2009		56505	1 Urbis LED	Axia 16 LED 500mA	28 Watts	6.00 Metres	Steel	
Y	3	STREET LIGHTING	SALTBURN GROVE	GRIMSBY	528173.97	408218.73	2009		56506	1 Urbis LED	Axia 16 LED 500mA	28 Watts	6.00 Metres	Steel	
Y	1	STREET LIGHTING	SEAMER GROVE	GRIMSBY	528126.87	408307.81	2003		56829	1 Urbis LED	Axia 16 LED 500mA	28 Watts	6.00 Metres	Stainless Steel	
Y	2	STREET LIGHTING	SEAMER GROVE	GRIMSBY	528113.26	408307.07	2003		56830	Urbis	Axia 8 LED 350mA	10 Watts	6.00 Metres	Stainless Steel	
Y	3	STREET LIGHTING	SEAMER GROVE	GRIMSBY	528094.08	408326.25	2003		56831	1 Urbis LED	Axia 16 LED 500mA	28 Watts	6.00 Metres	Stainless Steel	
Y	4	STREET LIGHTING	SEAMER GROVE	GRIMSBY	528098.66	408347.61	2003		56832	1 Urbis LED	Axia 16 LED 500mA	28 Watts	6.00 Metres	Stainless Steel	
Y	5	STREET LIGHTING	SEAMER GROVE	GRIMSBY	528128.23	408343.85	2003		56833	1 Urbis LED	Axia 16 LED 500mA	28 Watts	6.00 Metres	Stainless Steel	
Y	1	STREET LIGHTING	SEATON GROVE	GRIMSBY	528430.4	408152.72	2015	30/07/2015	56838	Urbis	Axia 16 LED 350mA	19 Watts	6.00 Metres	Galvanised Steel	
Y	2	STREET LIGHTING	SEATON GROVE	GRIMSBY	528470.54	408163.49	2015	30/07/2015	56839	Urbis	Axia 16 LED 350mA	19 Watts	6.00 Metres	Galvanised Steel	
Y	3	STREET LIGHTING	SEATON GROVE	GRIMSBY	528475.14	408185.67	2015	30/07/2015	56840	Urbis	Axia 16 LED 350mA	19 Watts	6.00 Metres	Galvanised Steel	
Y	4	STREET LIGHTING	SEATON GROVE	GRIMSBY	528498.92	408167.86	2010		62663	Urbis	Axia 16 LED 350mA	19 Watts	6.00 Metres	Steel	
Y	5	STREET LIGHTING	SEATON GROVE	GRIMSBY	528512.61	408171.63	2010		62664	Urbis	Axia 16 LED 350mA	19 Watts	6.00 Metres	Steel	
Y	6	STREET LIGHTING	SEATON GROVE	GRIMSBY	528523.92	408150.62	2010		62665	Urbis	Axia 16 LED 350mA	19 Watts	6.00 Metres	Steel	
Y	1	STREET LIGHTING	TORRINGTON STREET	GRIMSBY	527527.59	408295.33	1993		59341	Urbis	Axia 16 LED 350mA	19 Watts	6.00 Metres	Galvanised Steel	
Y	2	STREET LIGHTING	TORRINGTON STREET	GRIMSBY	527553.15	408290.21	1993		59342	Urbis	Axia 16 LED 350mA	19 Watts	6.00 Metres	Galvanised Steel	
Y	3	STREET LIGHTING	TORRINGTON STREET	GRIMSBY	527575.31	408308.57	1993		59343	Urbis	Axia 16 LED 350mA	19 Watts	6.00 Metres	Galvanised Steel	
Y	4	STREET LIGHTING	TORRINGTON STREET	GRIMSBY	527599.48	408303	1993		59344	Urbis	Axia 16 LED 350mA	19 Watts	6.00 Metres	Galvanised Steel	
Y	5	STREET LIGHTING	TORRINGTON STREET	GRIMSBY	527621	408321.41	1993		59345	Urbis	Axia 16 LED 350mA	19 Watts	6.00 Metres	Galvanised Steel	
Y	6	STREET LIGHTING	TORRINGTON STREET	GRIMSBY	527646.95	408316.29	1993		59346	Urbis	Axia 16 LED 350mA	19 Watts	6.00 Metres	Galvanised Steel	
Y	7	STREET LIGHTING	TORRINGTON STREET	GRIMSBY	527668.34	408334.83	1993		59347	Urbis	Axia 16 LED 350mA	19 Watts	6.00 Metres	Galvanised Steel	
Y	8	STREET LIGHTING	TORRINGTON STREET	GRIMSBY	527694.8	408329.9	1993		59348	Urbis	Axia 16 LED 350mA	19 Watts	6.00 Metres	Galvanised Steel	
Y	9	STREET LIGHTING	TORRINGTON STREET	GRIMSBY	527712.01	408346.92	1993		59349	Urbis	Axia 16 LED 350mA	19 Watts	6.00 Metres	Galvanised Steel	
Y	10	STREET LIGHTING	TORRINGTON STREET	GRIMSBY	527737.84	408341.67	1993		59350	Urbis	Axia 16 LED 350mA	19 Watts	6.00 Metres	Galvanised Steel	
Y	11	STREET LIGHTING	TORRINGTON STREET	GRIMSBY	527759.21	408359.6	1993		59351	Urbis	Axia 16 LED 350mA	19 Watts	6.00 Metres	Galvanised Steel	
Y	12	STREET LIGHTING	TORRINGTON STREET	GRIMSBY	527780.6	408365.61	1993		59352	Urbis	Axia 16 LED 350mA	19 Watts	6.00 Metres	Galvanised Steel	
Y	13	STREET LIGHTING	TORRINGTON STREET	GRIMSBY	527809.59	408373.84	1993		59353	Urbis	Axia 16 LED 350mA	19 Watts	6.00 Metres	Galvanised Steel	
Y	14	STREET LIGHTING	TORRINGTON STREET	GRIMSBY	527835.41	408369.09	1993		59354	Urbis	Axia 16 LED 350mA	19 Watts	6.00 Metres	Galvanised Steel	
Y	15	STREET LIGHTING	TORRINGTON STREET	GRIMSBY	527855.79	408386.88	1993		59355	Urbis	Axia 16 LED 350mA	19 Watts	6.00 Metres	Galvanised Steel	
Y	16	STREET LIGHTING	TORRINGTON STREET	GRIMSBY	527880.6	408393.52	1993		59356	Urbis	Axia 16 LED 350mA	19 Watts	6.00 Metres	Galvanised Steel	
Y	17	STREET LIGHTING	TORRINGTON STREET	GRIMSBY	527905.66	408388.33	1993		59357	Urbis	Axia 16 LED 350mA	19 Watts	6.00 Metres	Galvanised Steel	
Y	18	STREET LIGHTING	TORRINGTON STREET	GRIMSBY	527928.32	408394.72	1993		59358	Urbis	Axia 16 LED 350mA	19 Watts	6.00 Metres	Galvanised Steel	
Y	19	STREET LIGHTING	TORRINGTON STREET	GRIMSBY	527951.23	408413.27	1993		59359	Urbis	Axia 16 LED 350mA	19 Watts	6.00 Metres	Galvanised Steel	
Y	20	STREET LIGHTING	TORRINGTON STREET	GRIMSBY	527971.86	408418.84	1993		59360	Urbis	Axia 16 LED 350mA	19 Watts	6.00 Metres	Galvanised Steel	
Y	21	STREET LIGHTING	TORRINGTON STREET	GRIMSBY	527997.56	408413.84	1993		59361	Urbis	Axia 16 LED 350mA	19 Watts	6.00 Metres	Galvanised Steel	
Y	22	STREET LIGHTING	TORRINGTON STREET	GRIMSBY	528021.23	408432.64	1993		59362	Urbis	Axia 16 LED 350mA	19 Watts	6.00 Metres	Galvanised Steel	
Y	1	STREET LIGHTING	HAINTON AVENUE SERVICE ROAD 1	GRIMSBY	527539	408357	1999		50070	Urbis	Axia 16 LED 350mA	19 Watts	6.00 Metres	Galvanised Steel	
Y	1	STREET LIGHTING	HAINTON AVENUE SERVICE ROAD 2	GRIMSBY	527576	408219	1999		50071	Urbis	Axia 16 LED 350mA	19 Watts	6.00 Metres	Galvanised Steel	
Y	1	STREET LIGHTING	WEELSBY AVENUE	GRIMSBY	527412.84	408047.83	1994		59935	1 Urbis LED	Axia 16 LED 500mA	28 Watts	6.00 Metres	Galvanised Steel	
Y	2	STREET LIGHTING	WEELSBY AVENUE	GRIMSBY	527429.96	408025	1994		59936	1 Urbis LED	Axia 16 LED 500mA	28 Watts	6.00 Metres	Galvanised Steel	
Y	3	STREET LIGHTING	WEELSBY AVENUE	GRIMSBY	527436.3	408003.41	1994		59937	1 Urbis LED	Axia 16 LED 500mA	28 Watts	6.00 Metres	Galvanised Steel	
Y	4	STREET LIGHTING	WEELSBY AVENUE	GRIMSBY	527432.99	407975.7	2005		59938	1 Urbis LED	Axia 16 LED 500mA	28 Watts	6.00 Metres	Stainless Steel	
Y	5	STREET LIGHTING	WEELSBY AVENUE	GRIMSBY	527450.66	407951.95	1994		59939	1 Urbis LED	Axia 16 LED 500mA	28 Watts	6.00 Metres	Galvanised Steel	
Y	6	STREET LIGHTING	WEELSBY AVENUE	GRIMSBY	527446.24	407927.19	1994		59940	1 Urbis LED	Axia 16 LED 500mA	28 Watts	6.00 Metres	Galvanised Steel	
Y	7	STREET LIGHTING	WEELSBY AVENUE	GRIMSBY	527463.37	407905.37	1994		59941	1 Urbis LED	Axia 16 LED 500mA	28 Watts	6.00 Metres	Galvanised Steel	
Y	8	STREET LIGHTING	WEELSBY AVENUE	GRIMSBY	527469.44	407883.37	1994		59942	1 Urbis LED	Axia 16 LED 500mA	28 Watts	6.00 Metres	Galvanised Steel	
Y	9	STREET LIGHTING	WEELSBY AVENUE	GRIMSBY	527469.6	407851.41	2021	22/02/2021	68307	Urbis	Axia 24 LED 500mA	28 Watts	6.00 Metres	Galvanised Steel	
Y	10	STREET LIGHTING	WEELSBY AVENUE	GRIMSBY	527482.88	407834.67	1994		59944	1 Urbis LED	Axia 16 LED 500mA	28 Watts	6.00 Metres	Galvanised Steel	
Y	11	STREET LIGHTING	WEELSBY AVENUE	GRIMSBY	527479.75	407805.21	1994		59945	1 Urbis LED	Axia 16 LED 500mA	28 Watts	6.00 Metres	Galvanised Steel	
Y	12	STREET LIGHTING	WEELSBY AVENUE	GRIMSBY	527496.5	407784.86	1994		59946	1 Urbis LED	Axia 16 LED 500mA	28 Watts	6.00 Metres	Galvanised Steel	
Y	13	STREET LIGHTING	WEELSBY AVENUE	GRIMSBY	527492.09	407761.67	1994		59947	1 Urbis LED	Axia 16 LED 500mA	28 Watts	6.00 Metres	Galvanised Steel	
Y	14	STREET LIGHTING	WEELSBY AVENUE	GRIMSBY	527499.45	407733.77	1994		59948	1 Urbis LED	Axia 16 LED 500mA	28 Watts	6.00 Metres	Galvanised Steel	
Y	15	STREET LIGHTING	WEELSBY AVENUE	GRIMSBY	527506.63	407707.54	1994		59949	1 Urbis LED	Axia 16 LED 500mA	28 Watts	6.00 Metres	Galvanised Steel	
Y	16	STREET LIGHTING	WEELSBY AVENUE	GRIMSBY	527514.18	407679.83	1994		59950	1 Urbis LED	Axia 16 LED 500mA	28 Watts	6.00 Metres	Galvanised Steel	
Y	17	STREET LIGHTING	WEELSBY AVENUE	GRIMSBY	527518.97	407661.14	1994		59951	1 Urbis LED	Axia 16 LED 500mA	28 Watts	6.00 Metres	Galvanised Steel	
Y	18	STREET LIGHTING	WEELSBY AVENUE	GRIMSBY	527537.56	407633.43	1994		59952	1 Urbis LED	Axia 16 LED 500mA	28 Watts	6.00 Metres	Galvanised Steel	
Y	19	STREET LIGHTING	WEELSBY AVENUE	GRIMSBY	527543.68	407609.44	2021	22/02/2021	68451	Urbis	Axia 24 LED 500mA	28 Watts	6.00 Metres	Galvanised Steel	
Y	20	STREET LIGHTING	WEELSBY AVENUE	GRIMSBY	527545.66	407580.26	1994		59954	Urbis	Axia 16 LED 350mA	19 Watts	6.00 Metres	Galvanised Steel	
Y	21	STREET LIGHTING	WEELSBY AVENUE	GRIMSBY	527546.68	407552.54	1994		59955	1 Urbis LED	Axia 16 LED 500mA	28 Watts	6.00 Metres	Galvanised Steel	
Y	22	STREET LIGHTING	WEELSBY AVENUE	GRIMSBY	527537.05	407518.87	1994		59956	1 Urbis LED	Axia 16 LED 500mA	28 Watts	6.00 Metres	Galvanised Steel	
Y	23	STREET LIGHTING	WEELSBY AVENUE	GRIMSBY	527544.4	407480.39	1994		59957	1 Urbis LED	Axia 16 LED 500mA	28 Watts	6.00 Metres	Galvanised Steel	
Y	24	STREET LIGHTING	WEELSBY AVENUE	GRIMSBY	527535.03	407438.24	1994		59958	1 Urbis LED	Axia 16 LED 500mA	28 Watts	6.00 Metres	Galvanised Steel	
Y	25	STREET LIGHTING	WEELSBY AVENUE	GRIMSBY	527539.08	407396.08	1994		59959	1 Urbis LED	Axia 16 LED 500mA	28 Watts	6.00 Metres	Galvanised Steel	
Y	26	STREET LIGHTING	WEELSBY AVENUE	GRIMSBY	527547.44	407356.97	1994		59960	1 Urbis LED	Axia 16 LED 500mA	28 Watts	6.00 Metres	Galvanised Steel	
Y	1	STREET LIGHTING	WEELSBY GROVE	GRIMSBY	527351.93	407967.07	1992		59961	Urbis	Axia 16 LED 350mA	19 Watts	5.00 Metres	Galvanised Steel	
Y	2	STREET LIGHTING	WEELSBY GROVE	GRIMSBY	527372.94	407960.62	1992		59962	Urbis	Axia 16 LED 350mA	19 Watts	5.00 Metres	Galvanised Steel	
Y	3	STREET LIGHTING	WEELSBY GROVE	GRIMSBY	527391.9	407927.98	2007		59963	Urbis	Axia 16 LED 350mA	19 Watts	5.00 Metres	Steel	

Y	4	STREET LIGHTING	WEELSBY GROVE	GRIMSBY	527398.64	407973.21	1992		59964	Urbis	Axia 16 LED 350mA	19 Watts	5.00 Metres	Galvanised Steel	
Y	5	STREET LIGHTING	WEELSBY GROVE	GRIMSBY	527421.55	407979.98	1992		59965	Urbis	Axia 16 LED 350mA	19 Watts	5.00 Metres	Galvanised Steel	
Y	1	STREET LIGHTING	CREMATORIUM CAR PARK	GRIMSBY	527550.08	407405.9	2001		46894	1 Urbis LED	Teceo 24 LED 500mA	40 Watts	6.00 Metres	Galvanised Steel	
Y	2	STREET LIGHTING	CREMATORIUM CAR PARK	GRIMSBY	527574.78	407391.82	2001		62968	1 Urbis LED	Teceo 24 LED 500mA	40 Watts	6.00 Metres	Galvanised Steel	
Y	3	STREET LIGHTING	CREMATORIUM CAR PARK	GRIMSBY	527553.59	407386.61	2001		61556	1 Urbis LED	Teceo 24 LED 500mA	40 Watts	6.00 Metres	Galvanised Steel	
Y	3	STREET LIGHTING	CREMATORIUM CAR PARK	GRIMSBY	527553.59	407386.61	2001		62088	1 Urbis LED	Teceo 24 LED 500mA	40 Watts	6.00 Metres	Galvanised Steel	
Y	4	STREET LIGHTING	CREMATORIUM CAR PARK	GRIMSBY	527572.04	407410.46	2001		46895	1 Urbis LED	Teceo 24 LED 500mA	40 Watts	6.00 Metres	Galvanised Steel	
Y	4	STREET LIGHTING	CREMATORIUM CAR PARK	GRIMSBY	527572.04	407410.46	2001		62967	1 Urbis LED	Teceo 24 LED 500mA	40 Watts	6.00 Metres	Galvanised Steel	
Y	5	STREET LIGHTING	CREMATORIUM CAR PARK	GRIMSBY	527578.68	407374.05	2001		46896	1 Urbis LED	Teceo 24 LED 500mA	40 Watts	6.00 Metres	Galvanised Steel	
Y	6	STREET LIGHTING	CREMATORIUM CAR PARK	GRIMSBY	527563.82	407359.75	2001		46897	1 Urbis LED	Teceo 24 LED 500mA	40 Watts	6.00 Metres	Galvanised Steel	
Y	7	STREET LIGHTING	CREMATORIUM CAR PARK	GRIMSBY	527562.9	407341.03	2001		46898	1 Urbis LED	Teceo 24 LED 500mA	40 Watts	6.00 Metres	Galvanised Steel	
Y	8	STREET LIGHTING	CREMATORIUM CAR PARK	GRIMSBY	527573.88	407322.77	2001		46899	1 Urbis LED	Teceo 24 LED 500mA	40 Watts	6.00 Metres	Galvanised Steel	
Y	9	STREET LIGHTING	CREMATORIUM CAR PARK	GRIMSBY	527556.83	407313.97	2001		46900	1 Urbis LED	Teceo 24 LED 500mA	40 Watts	6.00 Metres	Galvanised Steel	
Y	10	STREET LIGHTING	CREMATORIUM CAR PARK	GRIMSBY	527579.57	407305.84	2001		46901	1 Urbis LED	Teceo 24 LED 500mA	40 Watts	6.00 Metres	Galvanised Steel	
Y	11	STREET LIGHTING	CREMATORIUM CAR PARK	GRIMSBY	527562.12	407299.23	2001		46902	1 Urbis LED	Teceo 24 LED 500mA	40 Watts	6.00 Metres	Galvanised Steel	
Y	12	STREET LIGHTING	CREMATORIUM CAR PARK	GRIMSBY	527567.38	407436.31	2019	31/10/2019	68420	Urbis	Axia 24 LED 540mA	41 Watts	6.00 Metres	Galvanised Steel	
Y	13	STREET LIGHTING	CREMATORIUM CAR PARK	GRIMSBY	527566.85	407457.34	2019	31/10/2019	68421	Urbis	Axia 24 LED 540mA	41 Watts	6.00 Metres	Galvanised Steel	
Y	1	STREET LIGHTING	WHITBY DRIVE	GRIMSBY	528374.48	408194.68	2009		60643	1 Urbis LED	Axia 16 LED 500mA	28 Watts	6.00 Metres	Steel	
Y	2	STREET LIGHTING	WHITBY DRIVE	GRIMSBY	528366.51	408215.83	2009		60644	1 Urbis LED	Axia 16 LED 500mA	28 Watts	6.00 Metres	Steel	
Y	3	STREET LIGHTING	WHITBY DRIVE	GRIMSBY	528341.78	408181.66	2009		60645	1 Urbis LED	Axia 16 LED 500mA	28 Watts	6.00 Metres	Steel	
Y	4	STREET LIGHTING	WHITBY DRIVE	GRIMSBY	528333.48	408202.81	2009		60646	1 Urbis LED	Axia 16 LED 500mA	28 Watts	6.00 Metres	Steel	
Y	5	STREET LIGHTING	WHITBY DRIVE	GRIMSBY	528308.43	408168.81	2009		60647	1 Urbis LED	Axia 16 LED 500mA	28 Watts	6.00 Metres	Steel	
Y	6	STREET LIGHTING	WHITBY DRIVE	GRIMSBY	528300.95	408189.8	2009		60648	1 Urbis LED	Axia 16 LED 500mA	28 Watts	6.00 Metres	Steel	
Y	7	STREET LIGHTING	WHITBY DRIVE	GRIMSBY	528280.45	408155.47	2009		60649	1 Urbis LED	Axia 16 LED 500mA	28 Watts	6.00 Metres	Steel	
Y	8	STREET LIGHTING	WHITBY DRIVE	GRIMSBY	528269.22	408179.55	2009		60650	1 Urbis LED	Axia 16 LED 500mA	28 Watts	6.00 Metres	Steel	
Y	9	STREET LIGHTING	WHITBY DRIVE	GRIMSBY	528234.5	408131.4	2009		60651	Urbis	Axia 8 LED 350mA	10 Watts	6.00 Metres	Steel	
Y	10	STREET LIGHTING	WHITBY DRIVE	GRIMSBY	528205.3	408117.1	2009		60652	Urbis	Axia 8 LED 350mA	10 Watts	6.00 Metres	Steel	
Y	11	STREET LIGHTING	WHITBY DRIVE	GRIMSBY	528208	408161.2	2009		60653	Urbis	Axia 8 LED 350mA	10 Watts	6.00 Metres	Steel	
Y	12	STREET LIGHTING	WHITBY DRIVE	GRIMSBY	528176.3	408150.6	2009		60654	Urbis	Axia 8 LED 350mA	10 Watts	6.00 Metres	Steel	
Y	1	STREET LIGHTING	REDCAR GROVE	GRIMSBY	528363.9	408044.71	1998		55963	Urbis	Axia 16 LED 350mA	19 Watts	5.00 Metres	Galvanised Steel	
Y	2	STREET LIGHTING	REDCAR GROVE	GRIMSBY	528362.38	408078.44	1998		55964	Urbis	Axia 16 LED 350mA	19 Watts	5.00 Metres	Galvanised Steel	
Y	3	STREET LIGHTING	REDCAR GROVE	GRIMSBY	528340.86	408080.59	1998		55965	Urbis	Axia 16 LED 350mA	19 Watts	5.00 Metres	Galvanised Steel	
Y	4	STREET LIGHTING	REDCAR GROVE	GRIMSBY	528327.95	408105.53	1998		55966	Urbis	Axia 8 LED 350mA	10 Watts	5.00 Metres	Galvanised Steel	
Y	5	STREET LIGHTING	REDCAR GROVE	GRIMSBY	528344.96	408124.73	1998		55967	Urbis	Axia 8 LED 350mA	10 Watts	5.00 Metres	Galvanised Steel	
Y	6	STREET LIGHTING	REDCAR GROVE	GRIMSBY	528372.23	408114.42	1998		55968	Urbis	Axia 8 LED 350mA	10 Watts	5.00 Metres	Galvanised Steel	
Y	7	STREET LIGHTING	REDCAR GROVE	GRIMSBY	528372.48	408089.17	1998		55969	Urbis	Axia 8 LED 350mA	10 Watts	5.00 Metres	Galvanised Steel	
Y	8	STREET LIGHTING	REDCAR GROVE	GRIMSBY	528352.1	408097.27	1998		55970	Urbis	Axia 8 LED 350mA	10 Watts	5.00 Metres	Galvanised Steel	
Y	1	STREET LIGHTING	LEGSBY PLACE	GRIMSBY	527324.17	407950.19	1993		52470	Urbis	Axia 16 LED 350mA	19 Watts	6.00 Metres	Galvanised Steel	
Y	2	STREET LIGHTING	LEGSBY PLACE	GRIMSBY	527290.66	407949.09	1993		52471	Urbis	Axia 16 LED 350mA	19 Watts	6.00 Metres	Galvanised Steel	
Y	3	STREET LIGHTING	LEGSBY PLACE	GRIMSBY	527267.27	407948.81	1993		52472	Urbis	Axia 16 LED 350mA	19 Watts	6.00 Metres	Galvanised Steel	
Y	4	STREET LIGHTING	LEGSBY PLACE	GRIMSBY	527259.91	407930.22	1993		52473	Urbis	Axia 16 LED 350mA	19 Watts	6.00 Metres	Galvanised Steel	
Y	5	STREET LIGHTING	LEGSBY PLACE	GRIMSBY	527240.21	407934.54	1993		52474	Urbis	Axia 16 LED 350mA	19 Watts	6.00 Metres	Galvanised Steel	
Y	6	STREET LIGHTING	LEGSBY PLACE	GRIMSBY	527216.09	407928.74	1993		52475	Urbis	Axia 16 LED 350mA	19 Watts	6.00 Metres	Galvanised Steel	
Y	7	STREET LIGHTING	LEGSBY PLACE	GRIMSBY	527289.55	407933.44	1993		52476	Urbis	Axia 8 LED 350mA	10 Watts	6.00 Metres	Galvanised Steel	
Y	8	STREET LIGHTING	LEGSBY PLACE	GRIMSBY	527316.43	407934.17	1993		52477	Urbis	Axia 8 LED 350mA	10 Watts	6.00 Metres	Galvanised Steel	
Y	1	STREET LIGHTING	DANES CLOSE	GRIMSBY	528261.24	408454.5	2007		47270	1 Urbis LED	Teceo 32 LED 500mA	52 Watts	8.00 Metres	Steel	
Y	2	STREET LIGHTING	DANES CLOSE	GRIMSBY	528236.05	408445.39	2007		47271	1 Urbis LED	Teceo 32 LED 500mA	52 Watts	8.00 Metres	Steel	
Y	3	STREET LIGHTING	DANES CLOSE	GRIMSBY	528204.5	408435.32	2007		47272	1 Urbis LED	Teceo 32 LED 500mA	52 Watts	8.00 Metres	Steel	
Y	4	STREET LIGHTING	DANES CLOSE	GRIMSBY	528166.82	408423.26	2007		47273	1 Urbis LED	Teceo 32 LED 500mA	52 Watts	8.00 Metres	Steel	
Y	5	STREET LIGHTING	DANES CLOSE	GRIMSBY	528125.36	408417.91	2007		47274	1 Urbis LED	Axia 16 LED 500mA	28 Watts	6.00 Metres	Galvanised Steel	
Y	6	STREET LIGHTING	DANES CLOSE	GRIMSBY	528122.87	408401.5	2008		47275	1 Urbis LED	Axia 16 LED 500mA	28 Watts	6.00 Metres	Galvanised Steel	
Y	7	STREET LIGHTING	DANES CLOSE	GRIMSBY	528102.06	408395.99	2007		47276	1 Urbis LED	Axia 16 LED 500mA	28 Watts	6.00 Metres	Galvanised Steel	
Y	8	STREET LIGHTING	DANES CLOSE	GRIMSBY	528079.77	408385.94	2007		47277	1 Urbis LED	Axia 16 LED 500mA	28 Watts	6.00 Metres	Galvanised Steel	
Y	9	STREET LIGHTING	DANES CLOSE	GRIMSBY	528069.9	408411.4	2007		47278	1 Urbis LED	Axia 16 LED 500mA	28 Watts	6.00 Metres	Galvanised Steel	
Y	10	STREET LIGHTING	DANES CLOSE	GRIMSBY	528116.33	408452.31	2007		47279	1 Urbis LED	Axia 16 LED 500mA	28 Watts	6.00 Metres	Galvanised Steel	
Y	11	STREET LIGHTING	DANES CLOSE	GRIMSBY	528063.58	408462.71	2007		47280	1 Urbis LED	Axia 16 LED 500mA	28 Watts	6.00 Metres	Galvanised Steel	
Y	12	STREET LIGHTING	DANES CLOSE	GRIMSBY	528086.82	408467.93	2007		47281	1 Urbis LED	Axia 16 LED 500mA	28 Watts	6.00 Metres	Galvanised Steel	
Y	13	STREET LIGHTING	DANES CLOSE	GRIMSBY	528118.73	408476.28	2007		47282	1 Urbis LED	Axia 16 LED 500mA	28 Watts	6.00 Metres	Galvanised Steel	
Y	14	STREET LIGHTING	DANES CLOSE	GRIMSBY	528139.3	408481.46	2007		47283	1 Urbis LED	Axia 16 LED 500mA	28 Watts	6.00 Metres	Galvanised Steel	
Y	1	STREET LIGHTING	GRANVILLE STREET	GRIMSBY	527550.97	408550.91	2022	12/07/2022	66431	Urbis	Axia 24 LED 500mA	28 Watts	6.00 Metres	Galvanised Steel	
Y	2	STREET LIGHTING	GRANVILLE STREET	GRIMSBY	527585.55	408578.46	1995		66432	1 Urbis LED	Teceo 16 LED 500mA	28 Watts	6.00 Metres	Galvanised Steel	
Y	3	STREET LIGHTING	GRANVILLE STREET	GRIMSBY	527612.02	408585.63	1995		66433	1 Urbis LED	Teceo 16 LED 500mA	28 Watts	6.00 Metres	Galvanised Steel	
Y	4	STREET LIGHTING	GRANVILLE STREET	GRIMSBY	527638.21	408592.95	1995		66434	1 Urbis LED	Teceo 16 LED 500mA	28 Watts	6.00 Metres	Galvanised Steel	
Y	5	STREET LIGHTING	GRANVILLE STREET	GRIMSBY	527666.21	408600.76	1995		49496	1 Urbis LED	Teceo 16 LED 500mA	28 Watts	6.00 Metres	Galvanised Steel	
Y	6	STREET LIGHTING	GRANVILLE STREET	GRIMSBY	527688.12	408618.99	1995		49497	1 Urbis LED	Teceo 16 LED 500mA	28 Watts	6.00 Metres	Galvanised Steel	
Y	7	STREET LIGHTING	GRANVILLE STREET	GRIMSBY	527715.6	408614.37	1995		49498	1 Urbis LED	Teceo 16 LED 500mA	28 Watts	6.00 Metres	Galvanised Steel	
Y	8	STREET LIGHTING	GRANVILLE STREET	GRIMSBY	527738.76	408620.93	1995		49499	1 Urbis LED	Teceo 16 LED 500mA	28 Watts	6.00 Metres	Galvanised Steel	
Y	9	STREET LIGHTING	GRANVILLE STREET	GRIMSBY	527762.14	408627.65	1995		49500	Urbis	Teceo 24 LED 500mA	40 Watts	6.00 Metres	Galvanised Steel	
Y	10	STREET LIGHTING	GRANVILLE STREET	GRIMSBY	527780	408644.49	1995		49501	1 Urbis LED	Teceo 16 LED 500mA	28 Watts	6.00 Metres	Galvanised Steel	
Y	11	STREET LIGHTING	GRANVILLE STREET	GRIMSBY	527808.54	408640.44	1995		49502	1 Urbis LED	Teceo 16 LED 500mA	28 Watts	6.00 Metres	Galvanised Steel	
Y	12	STREET LIGHTING	GRANVILLE STREET	GRIMSBY	527834.5	408647.71	1995		49503	1 Urbis LED	Axia 16 LED 500mA	28 Watts	6.00 Metres	Galvanised Steel	
Y	13	STREET LIGHTING	GRANVILLE STREET	GRIMSBY	527861.02	408654.99	1995		49504	1 Urbis LED	Axia 16 LED 500mA	28 Watts	6.00 Metres	Galvanised Steel	
Y	14	STREET LIGHTING	GRANVILLE STREET	GRIMSBY	527879.61	408672.48	1995		49505	1 Urbis LED	Axia 16 LED 500mA	28 Watts	6.00 Metres	Galvanised Steel	
Y	15	STREET LIGHTING	GRANVILLE STREET	GRIMSBY	527905.57	408667.78	1995		49506	1 Urbis LED	Axia 16 LED 500mA	28 Watts	6.00 Metres	Galvanised Steel	
Y	16	STREET LIGHTING	GRANVILLE STREET	GRIMSBY	527931.9	408675.05	1995		49507	1 Urbis LED	Axia 16 LED 500mA	28 Watts	6.00 Metres	Galvanised Steel	
Y	17	STREET LIGHTING	GRANVILLE STREET	GRIMSBY	527950.87	408692.61	2022	08/07/2022	68960	Urbis	Axia 16 LED 500mA	28 Watts	6.00 Metres	Galvanised Steel	
Y	18	STREET LIGHTING	GRANVILLE STREET	GRIMSBY				28/05/2025	70224	Urbis	Axia 24 LED 1000mA	80 Watts	6.00 Metres	Galvanised Steel	
Y	1	STREET LIGHTING	LADYSMITH ROAD	GRIMSBY	527937.54	409262.94	1989		52095	1 Urbis LED	Teceo 48 LED 500mA	79 Watts	10.00 Metres	Galvanised Steel	
Y	2	STREET LIGHTING	LADYSMITH ROAD	GRIMSBY	527953.36	409254.02	1989		52096	1 Urbis LED	Teceo 48 LED 500mA	79 Watts	10.00 Metres	Galvanised Steel	
Y	3	STREET LIGHTING	LADYSMITH ROAD	GRIMSBY	527968.3	409218.9	1989		52097	1 Urbis LED	Teceo 48 LED 500mA	79 Watts	10.00 Metres	Galvanised Steel	
Y	4	STREET LIGHTING	LADYSMITH ROAD	GRIMSBY	527966.78	409195.73	1989		52098	1 Urbis LED	Teceo 48 LED 500mA	79 Watts	10.00 Metres	Galvanised Steel	
Y	5	STREET LIGHTING	LADYSMITH ROAD	GRIMSBY	527988.93	409172	1989		52099	1 Urbis LED	Teceo 48 LED 500mA	79 Watts	10.00 Metres	Galvanised Steel	
Y	6	STREET LIGHTING	LADYSMITH ROAD	GRIMSBY	527989.69	409142.57	1989		52100	1 Urbis LED	Teceo 48 LED 500mA	79 Watts	10.00 Metres	Galvanised Steel	
Y	7	STREET LIGHTING	LADYSMITH ROAD	GRIMSBY	528010.96	409119.34	1989		52101	1 Urbis LED	Teceo 48 LED 500mA	79 Watts	10.00 Metres	Galvanised Steel	
Y	8	STREET LIGHTING	LADYSMITH ROAD	GRIMSBY	528010.33	409093.14	1989		52102	1 Urbis LED	Teceo 48 LED 500mA	79 Watts	10.00 Metres	Galvanised Steel	
Y	9	STREET LIGHTING	LADYSMITH ROAD	GRIMSBY	528027.67	409080.42	1989		52103	1 Urbis LED	Teceo 48 LED 500mA	79 Watts	10.00 Metres	Galvanised Steel	
Y	10	STREET LIGHTING	LADYSMITH ROAD	GRIMSBY	528031.59	409044.29	1989		52104	1 Urbis LED	Teceo 48 LED 500mA	79 Watts	10.00 Metres	Galvanised Steel	
Y	11	STREET LIGHTING	LADYSMITH ROAD	GRIMSBY	528054.12	409018.21	1989		52105	1 Urbis LED	Teceo 48 LED 500mA	79 Watts	10.00 Metres	Galvanised Steel	
Y	12	STREET LIGHTING	LADYSMITH ROAD	GRIMSBY	528059.06	408980.62	1989		52106	1 Urbis LED	Teceo 48 LED 500mA	79 Watts	10.00 Metres	Galvanised Steel	
Y	13	STREET LIGHTING	LADYSMITH ROAD	GRIMSBY	528081.69	408955.04	1989		52107	1 Urbis LED	Teceo 48 LED 500mA	79 Watts	10.00 Metres	Galvanised Steel	
Y	14	STREET LIGHTING	LADYSMITH ROAD	GRIMSBY	528084.6	408920.54	1989		52108	1 Urbis LED	Teceo 48 LED 500mA	79 Watts	10.00 Metres	Galvanised Steel	
Y	15	STREET LIGHTING	LADYSMITH ROAD	GRIMSBY	528108.9	408891.55	1989		52109	1 Urbis LED	Teceo 48 LED 500mA	79 Watts	10.00 Metres	Galvanised Steel	
Y	16	STREET LIGHTING	LADYSMITH ROAD	GRIMSBY	528124.57	408852.68	1989		52110	1 Urbis LED	Teceo 48 LED 500mA	79 Watts	10.00 Metres	Galvanised Steel	
Y	17	STREET LIGHTING	LADYSMITH ROAD	GRIMSBY	528121.13	408823.11	1989		52111	1 Urbis LED	Teceo 48 LED 500mA	79 Watts	10.00 Metres	Galvanised Steel	
Y	18	STREET LIGHTING	LADYSMITH ROAD	GRIMSBY	528141.58	408774.81	1989		52112	1 Urbis LED	Teceo 48 LED 700mA	104 Watts	10.00 Metres	Galvanised Steel	
Y	19	STREET LIGHTING	LADYSMITH ROAD	GRIMSBY	528163.96	408763.31	1989		52113	1 Urbis LED	Teceo 48 LED 700mA	104 Watts	10.00 Metres	Galvanised Steel	
Y	20	STREET LIGHTING	LADYSMITH ROAD	GRIMSBY	528160.04	408736.41	1989		52114	1 Urbis LED	Teceo 48 LED 700mA	104 Watts	10.00 Metres	Galvanised Steel	
Y	21	STREET LIGHTING	LADYSMITH ROAD	GRIMSBY	528190.47	408704.7	1989		52115	1 Urbis LED	Teceo 48 LED 700mA	104 Watts	10.00 Metres	Galvanised Steel	
Y	22	STREET LIGHTING	LADYSMITH ROAD	GRIMSBY	528212.27	408654.85	2006		52116	1 Urbis LED	Teceo 48 LED 700mA	104 Watts	8.00 Metres	Stainless Steel	
Y	23	STREET LIGHTING	LADYSMITH ROAD	GRIMSBY	528196.7	408640.2	2006		52117	1 Urbis LED	Teceo 48 LED 700mA	104 Watts	8.00 Metres	Stainless Steel	
Y	24	STREET LIGHTING	LADYSMITH ROAD	GRIMSBY	528229.17	408616.76	1989		52118	1 Urbis LED	Teceo 24 LED 500mA	40 Watts	10.00 Metres	Galvanised Steel	
Y	25	STREET LIGHTING	LADYSMITH ROAD	GRIMSBY	528226.99	408590.78		02/06/2025	52119	Urbis	Axia 24 LED 1000mA	80 Watts	8.00 Metres	Galvanised Steel	
Y	26	STREET LIGHTING	LADYSMITH ROAD	GRIMSBY	528255.34	408553.13	2015	31/07/2015	52120	1 Urbis LED	Teceo 48 LED 700mA	104 Watts	8.00 Metres	Galvanised Steel	
Y	27	STREET LIGHTING	LADYSMITH ROAD	GRIMSBY	528253.91	408524.74	2017		52121	1 Urbis LED	Teceo 48 LED 500mA	79 Watts	8.00 Metres	Steel	
Y	28	STREET LIGHTING	LADYSMITH ROAD	GRIMSBY	528265.53	408478.81	2000		52122	1 Urbis LED	Teceo 48 LED 700mA	104 Watts	8.00 Metres	Galvanised Steel	
Y	29	STREET LIGHTING	LADYSMITH ROAD	GRIMSBY	528284.02	408483.67	2015	31/07/2015	52123	1 Urbis LED	Teceo 48 LED 700mA	104 Watts	8.00 Metres	Galvanised Steel	
Y	30	STREET LIGHTING	LADYSMITH ROAD	GRIMSBY	528289.36	408442.52	2015	31/07/2015	52124	1 Urbis LED	Teceo 48 LED 700mA	104 Watts	8.00 Metres	Galvanised Steel	
Y	31	STREET LIGHTING	LADYSMITH ROAD	GRIMSBY	528306.44	408398.71	2015	31/07/2015	52125	1 Urbis LED	Teceo 48 LED 700mA	104 Watts	8.00 Metres	Galvanised Steel	
Y	32	STREET LIGHTING	LADYSMITH ROAD	GRIMSBY	528331.06	408366.15	2008		52126	1 Urbis LED	Teceo 48 LED 700mA	104 Watts	8.00 Metres	Steel	
Y	33	STREET LIGHTING	LADYSMITH ROAD	GRIMSBY	528335.03	408327.72	2015	31/07/2015	52127	1 Urbis LED	Teceo 48 LED 700mA	104 Watts	8.00 Metres	Galvanised Steel	

Y	34	STREET LIGHTING	LADYSMITH ROAD	GRIMSBY	528358.78	408294.31	2015	31/07/2015	52128	1 Urbis LED	Teceo 48 LED 700mA	104 Watts	8.00 Metres	Galvanised Steel	
Y	35	STREET LIGHTING	LADYSMITH ROAD	GRIMSBY	528363.99	408253.32	2008		52129	1 Urbis LED	Teceo 48 LED 700mA	104 Watts	8.00 Metres	Steel	
Y	36	STREET LIGHTING	LADYSMITH ROAD	GRIMSBY	528388.79	408218.82	2015	31/07/2015	52130	1 Urbis LED	Teceo 48 LED 700mA	104 Watts	8.00 Metres	Galvanised Steel	
Y	37	STREET LIGHTING	LADYSMITH ROAD	GRIMSBY	528403.33	408182.73	2015	31/07/2015	52131	1 Urbis LED	Teceo 48 LED 700mA	104 Watts	8.00 Metres	Galvanised Steel	
Y	38	STREET LIGHTING	LADYSMITH ROAD	GRIMSBY	528408.49	408142.86	2015	31/07/2015	52132	1 Urbis LED	Teceo 48 LED 700mA	104 Watts	8.00 Metres	Galvanised Steel	
Y	39	STREET LIGHTING	LADYSMITH ROAD	GRIMSBY	528431.32	408113.5	1998		52133	1 Urbis LED	Teceo 48 LED 700mA	104 Watts	10.00 Metres	Galvanised Steel	
Y	40	STREET LIGHTING	LADYSMITH ROAD	GRIMSBY	528432.79	408081.46	1955		52134	1 Urbis LED	Teceo 48 LED 700mA	104 Watts	8.00 Metres	Steel	
Y	41	STREET LIGHTING	LADYSMITH ROAD	GRIMSBY	528461.33	408043.07	1998		52135	1 Urbis LED	Teceo 48 LED 700mA	104 Watts	10.00 Metres	Galvanised Steel	
Y	42	STREET LIGHTING	LADYSMITH ROAD	GRIMSBY	528462.66	408000.83	1955		52136	1 Urbis LED	Teceo 48 LED 700mA	104 Watts	8.00 Metres	Steel	
Y	43	STREET LIGHTING	LADYSMITH ROAD	GRIMSBY	528456.08	407979.11	2012		52137	1 Urbis LED	Teceo 48 LED 700mA	104 Watts	12.00 Metres	Steel	
Y	1	STREET LIGHTING	PATRICK STREET	GRIMSBY	527159.18	408362.18	1990		54767	Urbis	Teceo 24 LED 500mA	40 Watts	6.00 Metres	Galvanised Steel	
Y	2	STREET LIGHTING	PATRICK STREET	GRIMSBY	527180.35	408368.08	1990		54768	Urbis	Teceo 24 LED 500mA	40 Watts	6.00 Metres	Galvanised Steel	
Y	3	STREET LIGHTING	PATRICK STREET	GRIMSBY	527206.86	408371.3	1990		54769	1 Urbis LED	Axia 16 LED 500mA	28 Watts	6.00 Metres	Galvanised Steel	
Y	4	STREET LIGHTING	PATRICK STREET	GRIMSBY	527226.38	408376.82	1990		54770	1 Urbis LED	Axia 16 LED 500mA	28 Watts	6.00 Metres	Galvanised Steel	
Y	5	STREET LIGHTING	PATRICK STREET	GRIMSBY	527250.13	408383.45	1990		54771	1 Urbis LED	Axia 16 LED 500mA	28 Watts	6.00 Metres	Galvanised Steel	
Y	6	STREET LIGHTING	PATRICK STREET	GRIMSBY	527278.49	408391.09	1990		54772	1 Urbis LED	Axia 16 LED 500mA	28 Watts	6.00 Metres	Galvanised Steel	
Y	7	STREET LIGHTING	PATRICK STREET	GRIMSBY	527303.89	408398.27	1990		54773	1 Urbis LED	Axia 16 LED 500mA	28 Watts	6.00 Metres	Galvanised Steel	
Y	8	STREET LIGHTING	PATRICK STREET	GRIMSBY	527332.06	408418.62	1990		54774	1 Urbis LED	Axia 16 LED 500mA	28 Watts	6.00 Metres	Galvanised Steel	
Y	9	STREET LIGHTING	PATRICK STREET	GRIMSBY	527352.13	408424.05	1990		54775	1 Urbis LED	Axia 16 LED 500mA	28 Watts	6.00 Metres	Galvanised Steel	
Y	10	STREET LIGHTING	PATRICK STREET	GRIMSBY	527377.17	408418.89	1990		54776	1 Urbis LED	Axia 16 LED 500mA	28 Watts	6.00 Metres	Galvanised Steel	
Y	11	STREET LIGHTING	PATRICK STREET	GRIMSBY	527402.95	408425.89	1990		54777	1 Urbis LED	Axia 16 LED 500mA	28 Watts	6.00 Metres	Galvanised Steel	
Y	12	STREET LIGHTING	PATRICK STREET	GRIMSBY	527429.31	408433.04	1990		54778	1 Urbis LED	Axia 16 LED 500mA	28 Watts	6.00 Metres	Galvanised Steel	
Y	13	STREET LIGHTING	PATRICK STREET	GRIMSBY	527491.97	408451.76	1993		54779	1 Urbis LED	Teceo 16 LED 500mA	28 Watts	6.00 Metres	Galvanised Steel	
Y	14	STREET LIGHTING	PATRICK STREET	GRIMSBY	527516.82	408470.07	1993		54780	1 Urbis LED	Teceo 16 LED 500mA	28 Watts	6.00 Metres	Galvanised Steel	
Y	15	STREET LIGHTING	PATRICK STREET	GRIMSBY	527545.73	408465.66	1993		54781	1 Urbis LED	Teceo 16 LED 500mA	28 Watts	6.00 Metres	Galvanised Steel	
Y	16	STREET LIGHTING	PATRICK STREET	GRIMSBY	527580.71	408487.48	1993		54782	1 Urbis LED	Teceo 16 LED 500mA	28 Watts	6.00 Metres	Galvanised Steel	
Y	17	STREET LIGHTING	PATRICK STREET	GRIMSBY	527602.07	408493.74	1993		54783	1 Urbis LED	Teceo 16 LED 500mA	28 Watts	6.00 Metres	Galvanised Steel	
Y	18	STREET LIGHTING	PATRICK STREET	GRIMSBY	527625.82	408488.21	1993		54784	1 Urbis LED	Teceo 16 LED 500mA	28 Watts	6.00 Metres	Galvanised Steel	
Y	19	STREET LIGHTING	PATRICK STREET	GRIMSBY	527647.91	408506.17	1993		54785	1 Urbis LED	Teceo 16 LED 500mA	28 Watts	6.00 Metres	Galvanised Steel	
Y	20	STREET LIGHTING	PATRICK STREET	GRIMSBY	527670.74	408512.52	1993		54786	1 Urbis LED	Teceo 16 LED 500mA	28 Watts	6.00 Metres	Galvanised Steel	
Y	21	STREET LIGHTING	PATRICK STREET	GRIMSBY	527695.78	408507.55	1990		54787	1 Urbis LED	Teceo 16 LED 500mA	28 Watts	6.00 Metres	Galvanised Steel	
Y	22	STREET LIGHTING	PATRICK STREET	GRIMSBY	527711.99	408524.49	1990		54788	1 Urbis LED	Teceo 16 LED 500mA	28 Watts	6.00 Metres	Galvanised Steel	
Y	23	STREET LIGHTING	PATRICK STREET	GRIMSBY	527739.05	408519.42	1990		54789	1 Urbis LED	Teceo 16 LED 500mA	28 Watts	6.00 Metres	Galvanised Steel	
Y	24	STREET LIGHTING	PATRICK STREET	GRIMSBY	527768.02	408539.86	1990		54790	1 Urbis LED	Teceo 16 LED 500mA	28 Watts	6.00 Metres	Galvanised Steel	
Y	25	STREET LIGHTING	PATRICK STREET	GRIMSBY	527796.37	408547.71	1990		54791	1 Urbis LED	Teceo 16 LED 500mA	28 Watts	6.00 Metres	Galvanised Steel	
Y	26	STREET LIGHTING	PATRICK STREET	GRIMSBY	527836.12	408548.15	1990		54792	1 Urbis LED	Teceo 16 LED 500mA	28 Watts	6.00 Metres	Galvanised Steel	
Y	27	STREET LIGHTING	PATRICK STREET	GRIMSBY	527862.57	408566.32	1990		54793	1 Urbis LED	Teceo 16 LED 500mA	28 Watts	6.00 Metres	Galvanised Steel	
Y	28	STREET LIGHTING	PATRICK STREET	GRIMSBY	527891.05	408574.36	1990		54794	1 Urbis LED	Teceo 16 LED 500mA	28 Watts	6.00 Metres	Galvanised Steel	
Y	29	STREET LIGHTING	PATRICK STREET	GRIMSBY	527925.86	408571.51	1990		54795	1 Urbis LED	Teceo 16 LED 500mA	28 Watts	6.00 Metres	Galvanised Steel	
Y	30	STREET LIGHTING	PATRICK STREET	GRIMSBY	527961.18	408581.7	1990		54796	1 Urbis LED	Teceo 16 LED 500mA	28 Watts	6.00 Metres	Galvanised Steel	
Y	31	STREET LIGHTING	PATRICK STREET	GRIMSBY	527977	408598.13	1990		54797	1 Urbis LED	Teceo 16 LED 500mA	28 Watts	6.00 Metres	Galvanised Steel	
Y	32	STREET LIGHTING	PATRICK STREET	GRIMSBY	528007	408594	2008		54798	1 Urbis LED	Teceo 16 LED 500mA	28 Watts	6.00 Metres	Steel	
Y	1	STREET LIGHTING	PEAKSFIELD AVENUE	GRIMSBY	527425.76	408598.93	1998		55070	Urbis	Axia 8 LED 350mA	10 Watts	5.00 Metres	Steel	
Y	2	STREET LIGHTING	PEAKSFIELD AVENUE	GRIMSBY	527440.7	408585.33	1998		55071	Urbis	Axia 8 LED 350mA	10 Watts	5.00 Metres	Steel	
Y	3	STREET LIGHTING	PEAKSFIELD AVENUE	GRIMSBY	527447.03	408562.6	1998		55072	Urbis	Axia 8 LED 350mA	10 Watts	5.00 Metres	Steel	
Y	4	STREET LIGHTING	PEAKSFIELD AVENUE	GRIMSBY	527454.24	408536.4	1998		55073	Urbis	Axia 8 LED 350mA	10 Watts	5.00 Metres	Steel	
Y	5	STREET LIGHTING	PEAKSFIELD AVENUE	GRIMSBY	527460.32	408513.43	1998		55074	Urbis	Axia 8 LED 350mA	10 Watts	5.00 Metres	Steel	
Y	6	STREET LIGHTING	PEAKSFIELD AVENUE	GRIMSBY	527467.53	408488.17	1998		55075	Urbis	Axia 8 LED 350mA	10 Watts	5.00 Metres	Steel	
Y	7	STREET LIGHTING	PEAKSFIELD AVENUE	GRIMSBY	527473.48	408467.22	1998		55076	Urbis	Axia 8 LED 350mA	10 Watts	5.00 Metres	Steel	
Y	8	STREET LIGHTING	PEAKSFIELD AVENUE	GRIMSBY	527471.59	408446.45	1998		55077	Urbis	Teceo 24 LED 500mA	40 Watts	5.00 Metres	Steel	
Y	9	STREET LIGHTING	PEAKSFIELD AVENUE	GRIMSBY	527481.42	408437.7	1998		55078	Urbis	Axia 8 LED 350mA	10 Watts	5.00 Metres	Steel	
Y	10	STREET LIGHTING	PEAKSFIELD AVENUE	GRIMSBY	527487.12	408416.61	1998		55079	Urbis	Axia 8 LED 350mA	10 Watts	5.00 Metres	Steel	
Y	11	STREET LIGHTING	PEAKSFIELD AVENUE	GRIMSBY	527492.09	408398.39	1998		55080	Urbis	Axia 8 LED 350mA	10 Watts	5.00 Metres	Steel	
Y	12	STREET LIGHTING	PEAKSFIELD AVENUE	GRIMSBY	527496.88	408380.07	1998		55081	Urbis	Axia 8 LED 350mA	10 Watts	5.00 Metres	Steel	
Y	13	STREET LIGHTING	PEAKSFIELD AVENUE	GRIMSBY	527502.96	408357.14	1998		55082	Urbis	Axia 8 LED 350mA	10 Watts	5.00 Metres	Steel	
Y	14	STREET LIGHTING	PEAKSFIELD AVENUE	GRIMSBY	527509.95	408329.25	1998		55083	Urbis	Axia 8 LED 350mA	10 Watts	5.00 Metres	Steel	
Y	15	STREET LIGHTING	PEAKSFIELD AVENUE	GRIMSBY	527517.13	408302.64	1998		55084	Urbis	Axia 8 LED 350mA	10 Watts	5.00 Metres	Steel	
Y	16	STREET LIGHTING	PEAKSFIELD AVENUE	GRIMSBY	527525.42	408272.54	1998		55085	Urbis	Axia 8 LED 350mA	10 Watts	5.00 Metres	Steel	
Y	17	STREET LIGHTING	PEAKSFIELD AVENUE	GRIMSBY	527531.5	408250.35	1998		55086	Urbis	Axia 8 LED 350mA	10 Watts	5.00 Metres	Steel	
Y	18	STREET LIGHTING	PEAKSFIELD AVENUE	GRIMSBY	527537.57	408227.62	1998		55087	Urbis	Axia 8 LED 350mA	10 Watts	5.00 Metres	Steel	
Y	19	STREET LIGHTING	PEAKSFIELD AVENUE	GRIMSBY	527543.83	408205.43	1998		55088	Urbis	Axia 8 LED 350mA	10 Watts	5.00 Metres	Steel	
Y	20	STREET LIGHTING	PEAKSFIELD AVENUE	GRIMSBY	527550.09	408180.76	1998		55089	Urbis	Axia 8 LED 350mA	10 Watts	5.00 Metres	Steel	
Y	1	STREET LIGHTING	WEELSBY ROAD	GRIMSBY	526604.14	408021.27	1975		59967	1 Urbis LED	Ampera 48 LED 700mA	104 Watts	12.00 Metres	Galvanised Steel	
Y	2	STREET LIGHTING	WEELSBY ROAD	GRIMSBY	526622.37	408004.52	1975		59968	1 Urbis LED	Ampera 48 LED 700mA	104 Watts	12.00 Metres	Galvanised Steel	
Y	3	STREET LIGHTING	WEELSBY ROAD	GRIMSBY	526658.82	408032.87	1975		59969	1 Urbis LED	Ampera 48 LED 700mA	104 Watts	12.00 Metres	Galvanised Steel	
Y	4	STREET LIGHTING	WEELSBY ROAD	GRIMSBY	526697.41	408029.98	1975		59970	1 Urbis LED	Ampera 48 LED 700mA	104 Watts	12.00 Metres	Galvanised Steel	
Y	5	STREET LIGHTING	WEELSBY ROAD	GRIMSBY	526725.3	408054.86	1975		59971	1 Urbis LED	Ampera 48 LED 700mA	104 Watts	12.00 Metres	Galvanised Steel	
Y	6	STREET LIGHTING	WEELSBY ROAD	GRIMSBY	526759.36	408065.54	1975		59972	1 Urbis LED	Ampera 48 LED 700mA	104 Watts	12.00 Metres	Galvanised Steel	
Y	7	STREET LIGHTING	WEELSBY ROAD	GRIMSBY	526794.9	408073.55	1975		59973	1 Urbis LED	Ampera 48 LED 700mA	104 Watts	12.00 Metres	Galvanised Steel	
Y	8	STREET LIGHTING	WEELSBY ROAD	GRIMSBY	526827.67	408076.59	1975		59974	1 Urbis LED	Ampera 48 LED 700mA	104 Watts	12.00 Metres	Galvanised Steel	
Y	9	STREET LIGHTING	WEELSBY ROAD	GRIMSBY	526872.96	408062.32	1975		59975	1 Urbis LED	Ampera 48 LED 700mA	104 Watts	12.00 Metres	Galvanised Steel	
Y	10	STREET LIGHTING	WEELSBY ROAD	GRIMSBY	526911.08	408078.7	1975		59976	1 Urbis LED	Ampera 48 LED 700mA	104 Watts	12.00 Metres	Galvanised Steel	
Y	11	STREET LIGHTING	WEELSBY ROAD	GRIMSBY	526956.18	408080.08	1975		59977	1 Urbis LED	Ampera 48 LED 700mA	104 Watts	12.00 Metres	Galvanised Steel	
Y	12	STREET LIGHTING	WEELSBY ROAD	GRIMSBY	526994.66	408065.63	1975		59978	1 Urbis LED	Ampera 48 LED 700mA	104 Watts	12.00 Metres	Galvanised Steel	
Y	13	STREET LIGHTING	WEELSBY ROAD	GRIMSBY	527029.46	408080.19	1975		59979	1 Urbis LED	Ampera 48 LED 700mA	104 Watts	12.00 Metres	Galvanised Steel	
Y	14	STREET LIGHTING	WEELSBY ROAD	GRIMSBY	527075.3	408064.82	1975		59980	1 Urbis LED	Ampera 48 LED 700mA	104 Watts	12.00 Metres	Galvanised Steel	
Y	15	STREET LIGHTING	WEELSBY ROAD	GRIMSBY	527119.49	408079.64	1975		59981	1 Urbis LED	Ampera 48 LED 700mA	104 Watts	12.00 Metres	Galvanised Steel	
Y	16	STREET LIGHTING	WEELSBY ROAD	GRIMSBY	527162.22	408064.16	1975		59982	1 Urbis LED	Ampera 48 LED 700mA	104 Watts	12.00 Metres	Galvanised Steel	
Y	17	STREET LIGHTING	WEELSBY ROAD	GRIMSBY	527198.31	408078.62	1975		59983	1 Urbis LED	Ampera 48 LED 700mA	104 Watts	12.00 Metres	Galvanised Steel	
Y	18	STREET LIGHTING	WEELSBY ROAD	GRIMSBY	527241.02	408076.13	1975		59984	1 Urbis LED	Ampera 48 LED 700mA	104 Watts	12.00 Metres	Galvanised Steel	
Y	19	STREET LIGHTING	WEELSBY ROAD	GRIMSBY	527276.74	408055.79	1975		59985	1 Urbis LED	Ampera 48 LED 700mA	104 Watts	12.00 Metres	Galvanised Steel	
Y	20	STREET LIGHTING	WEELSBY ROAD	GRIMSBY	527315.22	408050.63	1975		59986	1 Urbis LED	Ampera 48 LED 700mA	104 Watts	12.00 Metres	Galvanised Steel	
Y	21	STREET LIGHTING	WEELSBY ROAD	GRIMSBY	527351.86	408064.35	1975		59987	1 Urbis LED	Ampera 48 LED 700mA	104 Watts	12.00 Metres	Galvanised Steel	
Y	22	STREET LIGHTING	WEELSBY ROAD	GRIMSBY	527400.65	408054.13	1975		59988	1 Urbis LED	Ampera 48 LED 700mA	104 Watts	12.00 Metres	Galvanised Steel	
Y	23	STREET LIGHTING	WEELSBY ROAD	GRIMSBY	527433.61	408078.16	1975		59989	1 Urbis LED	Ampera 48 LED 700mA	104 Watts	12.00 Metres	Galvanised Steel	
Y	24	STREET LIGHTING	WEELSBY ROAD	GRIMSBY	527460.64	408092.47	2006		59990	1 Urbis LED	Ampera 48 LED 700mA	104 Watts	12.00 Metres	Stainless Steel	
Y	25	STREET LIGHTING	WEELSBY ROAD	GRIMSBY	527498.41	408106.51	1975		59991	1 Urbis LED	Ampera 48 LED 700mA	104 Watts	12.00 Metres	Galvanised Steel	
Y	26	STREET LIGHTING	WEELSBY ROAD	GRIMSBY	527524.19	408115.34	1998		59992	1 Urbis LED	Ampera 48 LED 700mA	104 Watts	12.00 Metres	Galvanised Steel	
Y	27	STREET LIGHTING	WEELSBY ROAD	GRIMSBY	527525.85	408092.14	1998		59993	1 Urbis LED	Ampera 48 LED 700mA	104 Watts	12.00 Metres	Galvanised Steel	
Y	28	STREET LIGHTING	WEELSBY ROAD	GRIMSBY	527577.77	408105.67	1998		59994	1 Urbis LED	Ampera 48 LED 700mA	104 Watts	12.00 Metres	Galvanised Steel	
Y	29	STREET LIGHTING	WEELSBY ROAD	GRIMSBY	527581.82	408073.73	1998		59995	1 Urbis LED	Ampera 48 LED 700mA	104 Watts	12.00 Metres	Galvanised Steel	
Y	30	STREET LIGHTING	WEELSBY ROAD	GRIMSBY	527604.28	408072.35	1998		59996	1 Urbis LED	Ampera 48 LED 700mA	104 Watts	12.00 Metres	Galvanised Steel	
Y	31	STREET LIGHTING	WEELSBY ROAD	GRIMSBY	527629.88	408065.81	1975		59997	1 Urbis LED	Ampera 48 LED 700mA	104 Watts	12.00 Metres	Galvanised Steel	
Y	32	STREET LIGHTING	WEELSBY ROAD	GRIMSBY	527660.44	408066.09	1975		59998	1 Urbis LED	Ampera 48 LED 700mA	104 Watts	12.00 Metres	Galvanised Steel	
Y	33	STREET LIGHTING	WEELSBY ROAD	GRIMSBY	527688.79	408083.12	1975		59999	1 Urbis LED	Ampera 48 LED 700mA	104 Watts	12.00 Metres	Galvanised Steel	
Y	34	STREET LIGHTING	WEELSBY ROAD	GRIMSBY	527731.51	408072.9	1975		60000	1 Urbis LED	Ampera 48 LED 700mA	104 Watts	12.00 Metres	Galvanised Steel	
Y	35	STREET LIGHTING	WEELSBY ROAD	GRIMSBY	527764.79	408090.18	1975		60001	1 Urbis LED	Ampera 48 LED 700mA	104 Watts	12.00 Metres	Galvanised Steel	
Y	36	STREET LIGHTING	WEELSBY ROAD	GRIMSBY	527808.98	408066.34	1975		60002	1 Urbis LED	Ampera 48 LED 700mA	104 Watts	12.00 Metres	Galvanised Steel	
Y	37	STREET LIGHTING	WEELSBY ROAD	GRIMSBY	527841.57	408078.77	1975		60003	1 Urbis LED	Ampera 48 LED 700mA	104 Watts	12.00 Metres	Galvanised Steel	
Y	38	STREET LIGHTING	WEELSBY ROAD	GRIMSBY	527883.36	408053.54	1975		60004	1 Urbis LED	Ampera 48 LED 700mA	104 Watts	12.00 Metres	Galvanised Steel	
Y	39	STREET LIGHTING	WEELSBY ROAD	GRIMSBY	527922.39	408065.05	1975		60005	1 Urbis LED	Ampera 48 LED 700mA	104 Watts	12.00 Metres	Galvanised Steel	
Y	40	STREET LIGHTING	WEELSBY ROAD	GRIMSBY	527956.45	408041.02	1975		60006	1 Urbis LED	Ampera 48 LED 700mA	104 Watts	12.00 Metres	Galvanised Steel	
Y	41	STREET LIGHTING	WEELSBY ROAD	GRIMSBY	527993.76	408030.22	1975		60007	1 Urbis LED	Ampera 48 LED 700mA	104 Watts	12.00 Metres	Galvanised Steel	
Y	42	STREET LIGHTING	WEELSBY ROAD	GRIMSBY	528030.46	408022.24	1975		60008	1 Urbis LED	Ampera 48 LED 700mA	104 Watts	12.00 Metres	Galvanised Steel	
Y	43	STREET LIGHTING	WEELSBY ROAD	GRIMSBY	528069.1	408021.86	1975		60009	1 Urbis LED	Ampera 48 LED 700mA	104 Watts	12.00 Metres	Galvanised Steel	
Y	44	STREET LIGHTING	WEELSBY ROAD	GRIMSBY	528106.89	408040.47	1975		60010	1 Urbis LED	Ampera 48 LED 700mA	104 Watts	12.00 Metres	Galvanised Steel	
Y	45	STREET LIGHTING	WEELSBY ROAD	GRIMSBY	528145.88	408041.1	1975		60011	1 Urbis LED	Ampera 48 LED 700mA	104 Watts	12.00 Metres	Galvanised Steel	
Y	46	STREET LIGHTING	WEELSBY ROAD	GRIMSBY	528187.02	408036.93	1975		60012	1 Urbis LED	Ampera 48 LED 700mA	104 Watts	12.00 Metres	Galvanised Steel	
Y	47	STREET LIGHTING	WEELSBY ROAD	GRIMSBY	528226.26	408026.73	1975		60013	1 Urbis LED	Ampera 48 LED 700mA	104 Watts	12.00 Metres	Galvanised Steel	
Y	48	STREET LIGHTING	WEELSBY ROAD	GRIMSBY	528260.14	407996.66	1975		60014	1 Urbis LED	Ampera 48 LED 700mA	104 Watts	12.00 Metres	Galvanised Steel	

Y	49	STREET LIGHTING	WEELSBY ROAD	GRIMSBY	528296.41	408004.49	1975		60015	1 Urbis LED	Ampera 48 LED 700mA	104 Watts	12.00 Metres	Galvanised Steel	
Y	50	STREET LIGHTING	WEELSBY ROAD	GRIMSBY	528322.92	407978.53	1975		60016	1 Urbis LED	Ampera 48 LED 700mA	104 Watts	12.00 Metres	Galvanised Steel	
Y	51	STREET LIGHTING	WEELSBY ROAD	GRIMSBY	528375.21	407984.97	1998		60017	1 Urbis LED	Ampera 48 LED 700mA	104 Watts	12.00 Metres	Galvanised Steel	
Y	52	STREET LIGHTING	WEELSBY ROAD	GRIMSBY	528413.14	407960.48	1998		60018	1 Urbis LED	Ampera 48 LED 700mA	104 Watts	12.00 Metres	Galvanised Steel	
Y	53	STREET LIGHTING	WEELSBY ROAD	GRIMSBY	528446.04	407956.45	2012		60019	1 Urbis LED	Ampera 48 LED 700mA	104 Watts	12.00 Metres	Steel	
Y	54	STREET LIGHTING	WEELSBY ROAD	GRIMSBY	528483.67	407962.05	2012		60020	1 Urbis LED	Ampera 48 LED 700mA	104 Watts	12.00 Metres	Steel	
Y	55	STREET LIGHTING	WEELSBY ROAD	GRIMSBY	528509.97	407987.29	1998		60021	1 Urbis LED	Ampera 48 LED 700mA	104 Watts	12.00 Metres	Galvanised Steel	
Y	56	STREET LIGHTING	WEELSBY ROAD	GRIMSBY	528543.81	407980.17	1998		60022	1 Urbis LED	Ampera 48 LED 700mA	104 Watts	12.00 Metres	Galvanised Steel	
Y	57	STREET LIGHTING	WEELSBY ROAD	GRIMSBY	528575.85	407997.11	1998		60023	1 Urbis LED	Ampera 48 LED 700mA	104 Watts	12.00 Metres	Galvanised Steel	
Y	58	STREET LIGHTING	WEELSBY ROAD	GRIMSBY	528605.67	408031.73	1998		60024	1 Urbis LED	Ampera 48 LED 700mA	104 Watts	12.00 Metres	Galvanised Steel	
Y	59	STREET LIGHTING	WEELSBY ROAD	GRIMSBY	528639.59	408028.96	1998		60025	1 Urbis LED	Ampera 48 LED 700mA	104 Watts	12.00 Metres	Galvanised Steel	
Y	60	STREET LIGHTING	WEELSBY ROAD	GRIMSBY	528652.42	408052.82	1998		60026	1 Urbis LED	Ampera 48 LED 700mA	104 Watts	12.00 Metres	Galvanised Steel	
Y	61	STREET LIGHTING	WEELSBY ROAD	GRIMSBY	528696.43	408050.15	1998		60027	1 Urbis LED	Ampera 48 LED 700mA	104 Watts	12.00 Metres	Galvanised Steel	
Y	62	STREET LIGHTING	WEELSBY ROAD	GRIMSBY	528714.84	408073.81	1998		60028	1 Urbis LED	Ampera 48 LED 700mA	104 Watts	12.00 Metres	Galvanised Steel	
Y	63	STREET LIGHTING	WEELSBY ROAD	GRIMSBY	528752.03	408081.45	1998		60029	1 Urbis LED	Ampera 48 LED 700mA	104 Watts	12.00 Metres	Galvanised Steel	
Y	64	STREET LIGHTING	WEELSBY ROAD	GRIMSBY	528792.35	408086.89	1998		60030	1 Urbis LED	Ampera 48 LED 700mA	104 Watts	12.00 Metres	Galvanised Steel	
Y	65	STREET LIGHTING	WEELSBY ROAD	GRIMSBY	528820.7	408072.99	1998		60031	1 Urbis LED	Ampera 48 LED 700mA	104 Watts	12.00 Metres	Galvanised Steel	
Y	66	STREET LIGHTING	WEELSBY ROAD	GRIMSBY	528837.27	408092.87	1998		60032	1 Urbis LED	Ampera 48 LED 700mA	104 Watts	12.00 Metres	Galvanised Steel	
Y	67	STREET LIGHTING	WEELSBY ROAD	GRIMSBY	528874.83	408080.17	1998		60033	1 Urbis LED	Ampera 48 LED 700mA	104 Watts	12.00 Metres	Galvanised Steel	
Y	1	STREET LIGHTING	NEWBY CENTRE CAR PARK WEELSBY	GRIMSBY	528405.7	407911.7	2009		54091	1 Urbis LED	Teceo 48 LED 700mA	104 Watts	10.00 Metres	Steel	
Y	2	STREET LIGHTING	NEWBY CENTRE CAR PARK WEELSBY	GRIMSBY	528433.23	407916.6	2009		61817	1 Urbis LED	Teceo 48 LED 700mA	104 Watts	10.00 Metres	Steel	
Y	2	STREET LIGHTING	NEWBY CENTRE CAR PARK WEELSBY	GRIMSBY	528433.23	407916.6	2009		62349	1 Urbis LED	Teceo 48 LED 700mA	104 Watts	10.00 Metres	Steel	
Y	1	STREET LIGHTING	PATRICK STREET SERVICE ROAD	GRIMSBY	527493.03	408530.71		24/04/2025	67126	Urbis	Axia 16 LED 350mA	19 Watts	6.00 Metres	Galvanised Steel	
Y	1	STREET LIGHTING	FOOTPATH BETWEEN LADYSMITH	GRIMSBY	528243.98	408521.29	2007		48750	Urbis	Axia 8 LED 350mA	10 Watts	6.00 Metres	Steel	
Y	2	STREET LIGHTING	FOOTPATH BETWEEN LADYSMITH	GRIMSBY	528211.17	408508.26	2007		48751	Urbis	Axia 8 LED 350mA	10 Watts	6.00 Metres	Steel	
Y	3	STREET LIGHTING	FOOTPATH BETWEEN LADYSMITH	GRIMSBY	528176.39	408494.59	2007		48752	Urbis	Axia 8 LED 350mA	10 Watts	6.00 Metres	Steel	
Y	4	STREET LIGHTING	FOOTPATH BETWEEN LADYSMITH	GRIMSBY	528155.43	408505.18	2007		48753	Urbis	Axia 8 LED 350mA	10 Watts	6.00 Metres	Steel	
Y	5	STREET LIGHTING	FOOTPATH BETWEEN LADYSMITH	GRIMSBY	528123.19	408495.13	2007		48754	Urbis	Axia 8 LED 350mA	10 Watts	6.00 Metres	Steel	
Y	6	STREET LIGHTING	FOOTPATH BETWEEN LADYSMITH	GRIMSBY	528090.15	408486.32	2007		48755	Urbis	Axia 8 LED 350mA	10 Watts	6.00 Metres	Steel	
Y	7	STREET LIGHTING	FOOTPATH BETWEEN LADYSMITH	GRIMSBY	528057.08	408477.88	2007		48756	Urbis	Axia 8 LED 350mA	10 Watts	6.00 Metres	Steel	
Y	8	STREET LIGHTING	FOOTPATH BETWEEN LADYSMITH	GRIMSBY	528022.87	408471.64	2007		48757	Urbis	Axia 8 LED 350mA	10 Watts	6.00 Metres	Steel	
Y	9	STREET LIGHTING	FOOTPATH BETWEEN LADYSMITH	GRIMSBY	527993.85	408463.18	2007		48758	Urbis	Axia 8 LED 350mA	10 Watts	6.00 Metres	Steel	
Y	1	STREET LIGHTING	PATRICK STREET SUBWAY	GRIMSBY	527448.1	408441.28	2008		61885	Sondia		36 Watts	3.00 Metres		
Y	1	STREET LIGHTING	PATRICK STREET SUBWAY	GRIMSBY	527448.1	408441.28	2008		62419	Sondia		36 Watts	3.00 Metres		
Y	2	STREET LIGHTING	PATRICK STREET SUBWAY	GRIMSBY	527450.38	408441.93	2008		61886	Sondia		36 Watts	3.00 Metres		
Y	2	STREET LIGHTING	PATRICK STREET SUBWAY	GRIMSBY	527450.38	408441.93	2008		62420	Sondia		36 Watts	3.00 Metres		
Y	3	STREET LIGHTING	PATRICK STREET SUBWAY	GRIMSBY	527452.76	408442.6	2008		61887	Sondia		36 Watts	3.00 Metres		
Y	3	STREET LIGHTING	PATRICK STREET SUBWAY	GRIMSBY	527452.76	408442.6	2008		62421	Sondia		36 Watts	3.00 Metres		
Y	4	STREET LIGHTING	PATRICK STREET SUBWAY	GRIMSBY	527455.08	408443.2	2008		61888	Sondia		36 Watts	3.00 Metres		
Y	4	STREET LIGHTING	PATRICK STREET SUBWAY	GRIMSBY	527455.08	408443.2	2008		62422	Sondia		36 Watts	3.00 Metres		
Y	5	STREET LIGHTING	PATRICK STREET SUBWAY	GRIMSBY	527457.52	408443.95	2008		61889	Sondia		36 Watts	3.00 Metres		
Y	5	STREET LIGHTING	PATRICK STREET SUBWAY	GRIMSBY	527457.52	408443.95	2008		62423	Sondia		36 Watts	3.00 Metres		
Y	6	STREET LIGHTING	PATRICK STREET SUBWAY	GRIMSBY	527459.79	408444.57	2008		61890	Sondia		36 Watts	3.00 Metres		
Y	6	STREET LIGHTING	PATRICK STREET SUBWAY	GRIMSBY	527459.79	408444.57	2008		62424	Sondia		36 Watts	3.00 Metres		
Y	1	STREET LIGHTING	PATRICK STREET MEWS	GRIMSBY	528029.15	408613.78	2008		54799	1 Urbis LED	Teceo 16 LED 500mA	28 Watts	6.00 Metres	Steel	
Y	2	STREET LIGHTING	PATRICK STREET MEWS	GRIMSBY	528043.87	408597.46	2008		54800	1 Urbis LED	Teceo 16 LED 500mA	28 Watts	6.00 Metres	Steel	
Y	3	STREET LIGHTING	PATRICK STREET MEWS	GRIMSBY	528056.97	408621.04	2008		54801	1 Urbis LED	Teceo 16 LED 500mA	28 Watts	6.00 Metres	Steel	
Y	4	STREET LIGHTING	PATRICK STREET MEWS	GRIMSBY	528085.94	408628.88	2008		54802	1 Urbis LED	Teceo 16 LED 500mA	28 Watts	6.00 Metres	Steel	
Y	1	STREET LIGHTING	ROBERT PEARSON MEWS	GRIMSBY	528226.16	408550.39	2009		56152	1 Urbis LED	Axia 16 LED 500mA	28 Watts	6.00 Metres	Steel	
Y	2	STREET LIGHTING	ROBERT PEARSON MEWS	GRIMSBY	528198.28	408532.39	2009		56153	1 Urbis LED	Axia 16 LED 500mA	28 Watts	6.00 Metres	Steel	
Y	3	STREET LIGHTING	ROBERT PEARSON MEWS	GRIMSBY	528167.31	408520.03	2009		56154	1 Urbis LED	Axia 16 LED 500mA	28 Watts	6.00 Metres	Steel	
Y	4	STREET LIGHTING	ROBERT PEARSON MEWS	GRIMSBY	528146.62	408537.63	2009		56155	1 Urbis LED	Axia 16 LED 500mA	28 Watts	6.00 Metres	Steel	
Y	5	STREET LIGHTING	ROBERT PEARSON MEWS	GRIMSBY	528117.27	408520.1	2009		56156	1 Urbis LED	Axia 16 LED 500mA	28 Watts	6.00 Metres	Steel	
Y	6	STREET LIGHTING	ROBERT PEARSON MEWS	GRIMSBY	528088.85	408519.29	2009		56157	1 Urbis LED	Axia 16 LED 500mA	28 Watts	6.00 Metres	Steel	
Y	7	STREET LIGHTING	ROBERT PEARSON MEWS	GRIMSBY	528066.15	408519.96	2009		56158	1 Urbis LED	Axia 16 LED 500mA	28 Watts	6.00 Metres	Steel	
Y	8	STREET LIGHTING	ROBERT PEARSON MEWS	GRIMSBY	528072.6	408498.13	2009		56159	1 Urbis LED	Axia 16 LED 500mA	28 Watts	6.00 Metres	Steel	
Y	1	STREET LIGHTING	LADYSMITH ROAD CARPARK	GRIMSBY	528321.03	408409.5	1980		52138	1 Urbis LED	Teceo 24 LED 500mA	40 Watts	5.00 Metres	Galvanised Steel	
Y	2	STREET LIGHTING	LADYSMITH ROAD CARPARK	GRIMSBY	528323.95	408422.68	1980		52139	1 Urbis LED	Teceo 24 LED 500mA	40 Watts	5.00 Metres	Galvanised Steel	
Y	3	STREET LIGHTING	LADYSMITH ROAD CARPARK	GRIMSBY	528341.48	408417.18	1980		52140	1 Urbis LED	Teceo 24 LED 500mA	40 Watts	5.00 Metres	Galvanised Steel	
Y	4	STREET LIGHTING	LADYSMITH ROAD CARPARK	GRIMSBY	528343.47	408430.71	1980		52141	1 Urbis LED	Teceo 24 LED 500mA	40 Watts	5.00 Metres	Galvanised Steel	
Y	5	STREET LIGHTING	LADYSMITH ROAD CARPARK	GRIMSBY	528357.93	408427.14	1980		52142	1 Urbis LED	Teceo 24 LED 500mA	40 Watts	6.00 Metres	Galvanised Steel	
Y	6	STREET LIGHTING	LADYSMITH ROAD CARPARK	GRIMSBY	528354.98	408450.44	2018	21/09/2018	67053	Urbis	Teceo 16 LED 500mA	28 Watts	6.00 Metres	Galvanised Steel	
Y	7	STREET LIGHTING	LADYSMITH ROAD CARPARK	GRIMSBY	528383.68	408431.93	2020	10/06/2020	67864	Urbis	Teceo 16 LED 500mA	25 Watts	6.00 Metres	Galvanised Steel	
Y	8	STREET LIGHTING	LADYSMITH ROAD CARPARK	GRIMSBY	528375.34	408454.97	1980		52145	1 Urbis LED	Teceo 24 LED 500mA	40 Watts	5.00 Metres	Galvanised Steel	
Y	9	STREET LIGHTING	LADYSMITH ROAD CARPARK	GRIMSBY	528406.64	408437.2	1980		52146	1 Urbis LED	Teceo 24 LED 500mA	40 Watts	6.00 Metres	Galvanised Steel	
Y	10	STREET LIGHTING	LADYSMITH ROAD CARPARK	GRIMSBY	528409.38	408459.8	1980		52147	1 Urbis LED	Teceo 24 LED 500mA	40 Watts	5.00 Metres	Galvanised Steel	
Y	11	STREET LIGHTING	LADYSMITH ROAD CARPARK	GRIMSBY	528432.57	408442.89	1980		52148	1 Urbis LED	Teceo 24 LED 500mA	40 Watts	6.00 Metres	Galvanised Steel	
Y	12	STREET LIGHTING	LADYSMITH ROAD CARPARK	GRIMSBY	528441.5	408467.04	1980		52149	1 Urbis LED	Teceo 24 LED 500mA	40 Watts	5.00 Metres	Galvanised Steel	
Y	13	STREET LIGHTING	LADYSMITH ROAD CARPARK	GRIMSBY	528444.34	408442.55	1980		52150	1 Urbis LED	Teceo 24 LED 500mA	40 Watts	5.00 Metres	Galvanised Steel	
Y	1	STREET LIGHTING	INTAX FARM MEWS	GRIMSBY	527576.08	408668.71	1994		51350	Urbis	Axia 16 LED 350mA	19 Watts	5.00 Metres	Galvanised Steel	
Y	2	STREET LIGHTING	INTAX FARM MEWS	GRIMSBY	527580.89	408649.91	1994		51351	Urbis	Axia 16 LED 350mA	19 Watts	5.00 Metres	Galvanised Steel	
Y	3	STREET LIGHTING	INTAX FARM MEWS	GRIMSBY	527587.1	408626.31	1994		51352	Urbis	Axia 16 LED 350mA	19 Watts	5.00 Metres	Galvanised Steel	
Y	4	STREET LIGHTING	INTAX FARM MEWS	GRIMSBY	527594.82	408650.67	1994		51353	Urbis	Axia 16 LED 350mA	19 Watts	5.00 Metres	Galvanised Steel	
Y	5	STREET LIGHTING	INTAX FARM MEWS	GRIMSBY	527603.05	408637.38	1994		51354	Urbis	Axia 16 LED 350mA	19 Watts	5.00 Metres	Galvanised Steel	
Y	1	STREET LIGHTING	BLAYDON GROVE	GRIMSBY	524211.78	407923.73	2021	13/10/2021	68733	Urbis	Axia 16 LED 350mA	19 Watts	6.00 Metres	Galvanised Steel	
Y	2	STREET LIGHTING	BLAYDON GROVE	GRIMSBY	524211.09	407942.18	2014		44223	Urbis	Axia 16 LED 350mA	19 Watts	6.00 Metres	Galvanised Steel	
Y	3	STREET LIGHTING	BLAYDON GROVE	GRIMSBY	524204.01	407966.04	1993		44224	Urbis	Axia 16 LED 350mA	19 Watts	5.00 Metres	Galvanised Steel	
Y	4	STREET LIGHTING	BLAYDON GROVE	GRIMSBY	524221.98	407965.66	1993		44225	Urbis	Axia 16 LED 350mA	19 Watts	5.00 Metres	Galvanised Steel	
Y	1	STREET LIGHTING	BRADLEY ROAD	GRIMSBY	524339.25	407617.04	2000		44489	1 Urbis LED	Teceo 48 LED 500mA	79 Watts	10.00 Metres	Galvanised Steel	
Y	2	STREET LIGHTING	BRADLEY ROAD	GRIMSBY	524344.13	407589.66	2000		44490	1 Urbis LED	Teceo 48 LED 500mA	79 Watts	10.00 Metres	Galvanised Steel	
Y	3	STREET LIGHTING	BRADLEY ROAD	GRIMSBY	524349.65	407558.09	2000		44491	1 Urbis LED	Teceo 48 LED 500mA	79 Watts	10.00 Metres	Galvanised Steel	
Y	4	STREET LIGHTING	BRADLEY ROAD	GRIMSBY	524354.44	407518.96	2000		44492	1 Urbis LED	Teceo 48 LED 500mA	79 Watts	10.00 Metres	Galvanised Steel	
Y	5	STREET LIGHTING	BRADLEY ROAD	GRIMSBY	524359.23	407483.06	2000		44493	1 Urbis LED	Teceo 48 LED 500mA	79 Watts	10.00 Metres	Galvanised Steel	
Y	6	STREET LIGHTING	BRADLEY ROAD	GRIMSBY	524364.01	407441.36	2000		44494	1 Urbis LED	Teceo 48 LED 500mA	79 Watts	10.00 Metres	Galvanised Steel	
Y	7	STREET LIGHTING	BRADLEY ROAD	GRIMSBY	524365.84	407406.87	2000		44495	1 Urbis LED	Teceo 48 LED 500mA	79 Watts	10.00 Metres	Galvanised Steel	
Y	8	STREET LIGHTING	BRADLEY ROAD	GRIMSBY	524367.56	407371.1	2000		44496	1 Urbis LED	Teceo 48 LED 500mA	79 Watts	8.00 Metres	Galvanised Steel	
Y	9	STREET LIGHTING	BRADLEY ROAD	GRIMSBY	524368.57	407341.43	2000		44497	1 Urbis LED	Teceo 48 LED 500mA	79 Watts	8.00 Metres	Galvanised Steel	
Y	10	STREET LIGHTING	BRADLEY ROAD	GRIMSBY	524368.57	407311.96	2000		44498	1 Urbis LED	Teceo 48 LED 500mA	79 Watts	8.00 Metres	Galvanised Steel	
Y	11	STREET LIGHTING	BRADLEY ROAD	GRIMSBY	524368.16	407281.88	2000		44499	1 Urbis LED	Teceo 48 LED 500mA	79 Watts	8.00 Metres	Galvanised Steel	
Y	12	STREET LIGHTING	BRADLEY ROAD	GRIMSBY	524367.15	407251.81	2015		44500	1 Urbis LED	Teceo 48 LED 500mA	79 Watts	8.00 Metres	Galvanised Steel	
Y	13	STREET LIGHTING	BRADLEY ROAD	GRIMSBY	524365.73	407222.14	2000		44501	1 Urbis LED	Teceo 48 LED 500mA	79 Watts	8.00 Metres	Galvanised Steel	
Y	14	STREET LIGHTING	BRADLEY ROAD	GRIMSBY	524366.95	407192.46	2000		44502	1 Urbis LED	Teceo 48 LED 500mA	79 Watts	8.00 Metres	Galvanised Steel	
Y	15	STREET LIGHTING	BRADLEY ROAD	GRIMSBY	524369.64	407162.45	2000		44503	1 Urbis LED	Teceo 48 LED 500mA	79 Watts	8.00 Metres	Galvanised Steel	
Y	16	STREET LIGHTING	BRADLEY ROAD	GRIMSBY	524370.53	407134.48	2000		44504	1 Urbis LED	Teceo 48 LED 500mA	79 Watts	8.00 Metres	Galvanised Steel	
Y	17	STREET LIGHTING	BRADLEY ROAD	GRIMSBY	524371.85	407105.36	2000		44505	1 Urbis LED	Teceo 48 LED 500mA	79 Watts	8.00 Metres	Galvanised Steel	
Y	18	STREET LIGHTING	BRADLEY ROAD	GRIMSBY	524371.85	407068.82	2000		44506	1 Urbis LED	Teceo 48 LED 500mA	79 Watts	8.00 Metres	Galvanised Steel	
Y	19	STREET LIGHTING	BRADLEY ROAD	GRIMSBY	524372.03	407040.1	2000		44507	1 Urbis LED	Teceo 48 LED 500mA	79 Watts	8.00 Metres	Galvanised Steel	
Y	20	STREET LIGHTING	BRADLEY ROAD	GRIMSBY	524372.4	407006.22	2000		44508	1 Urbis LED	Teceo 48 LED 500mA	79 Watts	8.00 Metres	Galvanised Steel	
Y	21	STREET LIGHTING	BRADLEY ROAD	GRIMSBY	524370.56	406970.32	2000		44509	1 Urbis LED	Teceo 48 LED 500mA	79 Watts	8.00 Metres	Galvanised Steel	
Y	22	STREET LIGHTING	BRADLEY ROAD	GRIMSBY	524368.67	406939.03	2000		44510	1 Urbis LED	Teceo 48 LED 500mA	79 Watts	8.00 Metres	Galvanised Steel	
Y	23	STREET LIGHTING	BRADLEY ROAD	GRIMSBY	524368.17	406898.65	2000		44511	1 Urbis LED	Teceo 48 LED 500mA	79 Watts	8.00 Metres	Galvanised Steel	
Y	24	STREET LIGHTING	BRADLEY ROAD	GRIMSBY	524372.17	406861.47	2021	15/02/2021	68278	Urbis	Teceo 48 LED 500mA	79 Watts	8.00 Metres	Galvanised Steel	
Y	25	STREET LIGHTING	BRADLEY ROAD	GRIMSBY	524386.65	406839.67	1989		44513	1 Urbis LED	Teceo 48 LED 500mA	79 Watts	8.00 Metres	Galvanised Steel	
Y	26	STREET LIGHTING	BRADLEY ROAD	GRIMSBY	524380.52	406808.18	1989		44514	1 Urbis LED	Teceo 48 LED 500mA	79 Watts	8.00 Metres	Galvanised Steel	
Y	27	STREET LIGHTING	BRADLEY ROAD	GRIMSBY	524386.78	406772.12	1989		44515	1 Urbis LED	Teceo 48 LED 500mA	79 Watts	8.00 Metres	Galvanised Steel	
Y	1	STREET LIGHTING	BROADWAY OFF STREET PARKING	GRIMSBY	524066.37	408164.62	2009		44791	Urbis	Axia 16 LED 350mA	19 Watts	6.00 Metres	Steel	
Y	2	STREET LIGHTING	BROADWAY OFF STREET PARKING	GRIMSBY	524041.23	408161.39	2009		44792	Urbis	Axia 16 LED 350mA	19 Watts	6.00 Metres	Steel	
Y	3	STREET LIGHTING	BROADWAY OFF STREET PARKING	GRIMSBY	524017.77	408158.72	2009		44793	Urbis	Axia 16 LED 350mA	19 Watts	6.00 Metres	Steel	
Y	4	STREET LIGHTING	BROADWAY OFF STREET PARKING	GRIMSBY	523991.88	408155.31	2009		44794	Urbis	Axia 16 LED 350mA	19 Watts	6.00 Metres	Steel	
Y	5	STREET LIGHTING	BROADWAY OFF STREET PARKING	GRIMSBY	523965.21	408152.15	2009		44795	Urbis	Axia 16 LED 350mA	19 Watts	6.00 Metres	Steel	

Y	6	STREET LIGHTING	BROADWAY OFF STREET PARKING	GRIMSBY	523940.66	408148.8	2009		44796	Urbis	Axia 16 LED 350mA	19 Watts	6.00 Metres	Steel	
Y	1	STREET LIGHTING	BROADWAY	GRIMSBY	524504.36	408291.91	2011		44743	1 Urbis LED	Teceo 48 LED 500mA	79 Watts	8.00 Metres	Steel	
Y	2	STREET LIGHTING	BROADWAY	GRIMSBY	524475.09	408304.15	1998		44744	1 Urbis LED	Teceo 48 LED 500mA	79 Watts	8.00 Metres	Galvanised Steel	
Y	3	STREET LIGHTING	BROADWAY	GRIMSBY	524453.18	408327.44	1998		44745	1 Urbis LED	Teceo 48 LED 500mA	79 Watts	8.00 Metres	Galvanised Steel	
Y	4	STREET LIGHTING	BROADWAY	GRIMSBY	524422.43	408337.57	1998		44746	1 Urbis LED	Teceo 48 LED 500mA	79 Watts	8.00 Metres	Galvanised Steel	
Y	5	STREET LIGHTING	BROADWAY	GRIMSBY	524397.21	408329.56	1998		44747	1 Urbis LED	Teceo 48 LED 500mA	79 Watts	8.00 Metres	Galvanised Steel	
Y	6	STREET LIGHTING	BROADWAY	GRIMSBY	524373.82	408311.7	1998		44748	1 Urbis LED	Teceo 48 LED 500mA	79 Watts	8.00 Metres	Galvanised Steel	
Y	7	STREET LIGHTING	BROADWAY	GRIMSBY	524350.81	408293.75	1998		44749	1 Urbis LED	Teceo 48 LED 500mA	79 Watts	8.00 Metres	Galvanised Steel	
Y	8	STREET LIGHTING	BROADWAY	GRIMSBY	524327.43	408260.15	1998		44750	1 Urbis LED	Teceo 48 LED 500mA	79 Watts	8.00 Metres	Galvanised Steel	
Y	9	STREET LIGHTING	BROADWAY	GRIMSBY	524292.07	408250.85	1998		44751	1 Urbis LED	Teceo 48 LED 500mA	79 Watts	8.00 Metres	Galvanised Steel	
Y	10	STREET LIGHTING	BROADWAY	GRIMSBY	524271.82	408217.98	1998		44752	1 Urbis LED	Teceo 48 LED 500mA	79 Watts	8.00 Metres	Galvanised Steel	
Y	11	STREET LIGHTING	BROADWAY	GRIMSBY	524232.05	408209.97	1998		44753	1 Urbis LED	Teceo 48 LED 500mA	79 Watts	8.00 Metres	Galvanised Steel	
Y	12	STREET LIGHTING	BROADWAY	GRIMSBY	524208.49	408178.76	1998		44754	1 Urbis LED	Teceo 48 LED 500mA	79 Watts	8.00 Metres	Galvanised Steel	
Y	13	STREET LIGHTING	BROADWAY	GRIMSBY	524170.41	408177.92	1998		44755	1 Urbis LED	Teceo 48 LED 500mA	79 Watts	8.00 Metres	Galvanised Steel	
Y	14	STREET LIGHTING	BROADWAY	GRIMSBY	524140.18	408153.08	1998		44756	1 Urbis LED	Teceo 48 LED 500mA	79 Watts	8.00 Metres	Galvanised Steel	
Y	15	STREET LIGHTING	BROADWAY	GRIMSBY	524110.77	408160.09	1998		44757	1 Urbis LED	Teceo 48 LED 500mA	79 Watts	8.00 Metres	Galvanised Steel	
Y	16	STREET LIGHTING	BROADWAY	GRIMSBY	524097.6	408143.57	1998		44758	1 Urbis LED	Teceo 48 LED 500mA	79 Watts	8.00 Metres	Galvanised Steel	
Y	17	STREET LIGHTING	BROADWAY	GRIMSBY	524062.79	408154.01	1998		44759	1 Urbis LED	Teceo 48 LED 500mA	79 Watts	8.00 Metres	Galvanised Steel	
Y	18	STREET LIGHTING	BROADWAY	GRIMSBY	524029.63	408134.45	1998		44760	1 Urbis LED	Teceo 48 LED 500mA	79 Watts	8.00 Metres	Galvanised Steel	
Y	19	STREET LIGHTING	BROADWAY	GRIMSBY	523993.56	408144.83	1998		44761	1 Urbis LED	Teceo 48 LED 500mA	79 Watts	8.00 Metres	Galvanised Steel	
Y	20	STREET LIGHTING	BROADWAY	GRIMSBY	523960.15	408125.47	1998		44762	1 Urbis LED	Teceo 48 LED 500mA	79 Watts	8.00 Metres	Galvanised Steel	
Y	21	STREET LIGHTING	BROADWAY	GRIMSBY	523926.48	408121.04	1998		44763	1 Urbis LED	Teceo 48 LED 500mA	79 Watts	8.00 Metres	Galvanised Steel	
Y	22	STREET LIGHTING	BROADWAY	GRIMSBY	523898.65	408132.52	1998		44764	1 Urbis LED	Teceo 48 LED 500mA	79 Watts	8.00 Metres	Galvanised Steel	
Y	23	STREET LIGHTING	BROADWAY	GRIMSBY	523879.03	408114.98	1998		44765	1 Urbis LED	Teceo 48 LED 500mA	79 Watts	8.00 Metres	Galvanised Steel	
Y	24	STREET LIGHTING	BROADWAY	GRIMSBY	523846.12	408125.42	1998		44766	1 Urbis LED	Teceo 48 LED 500mA	79 Watts	8.00 Metres	Galvanised Steel	
Y	25	STREET LIGHTING	BROADWAY	GRIMSBY	523819.92	408128.15	1998		44767	1 Urbis LED	Teceo 48 LED 500mA	79 Watts	8.00 Metres	Galvanised Steel	
Y	26	STREET LIGHTING	BROADWAY	GRIMSBY	523785.11	408131.17	2013		44768	1 Urbis LED	Teceo 48 LED 500mA	79 Watts	8.00 Metres	Steel	
Y	27	STREET LIGHTING	BROADWAY	GRIMSBY	523763.09	408113.84	1998		44769	1 Urbis LED	Teceo 48 LED 500mA	79 Watts	8.00 Metres	Galvanised Steel	
Y	28	STREET LIGHTING	BROADWAY	GRIMSBY	523764.45	408128.95	2013		44770	1 Urbis LED	Teceo 48 LED 500mA	79 Watts	8.00 Metres	Steel	
Y	29	STREET LIGHTING	BROADWAY	GRIMSBY	523750.87	408125.78	2013		44771	1 Urbis LED	Teceo 48 LED 500mA	79 Watts	8.00 Metres	Steel	
Y	30	STREET LIGHTING	BROADWAY	GRIMSBY	523734.04	408106.81	2013		44772	1 Urbis LED	Teceo 48 LED 500mA	79 Watts	8.00 Metres	Steel	
Y	31	STREET LIGHTING	BROADWAY	GRIMSBY	523719.16	408088.15	1998		44773	1 Urbis LED	Teceo 48 LED 500mA	79 Watts	8.00 Metres	Galvanised Steel	
Y	32	STREET LIGHTING	BROADWAY	GRIMSBY	523710.05	408055.68	1998		44774	1 Urbis LED	Teceo 48 LED 500mA	79 Watts	8.00 Metres	Galvanised Steel	
Y	33	STREET LIGHTING	BROADWAY	GRIMSBY	523713.34	408019.92	1998		44775	1 Urbis LED	Teceo 48 LED 500mA	79 Watts	8.00 Metres	Galvanised Steel	
Y	34	STREET LIGHTING	BROADWAY	GRIMSBY	523729.97	407995.7	1998		44776	1 Urbis LED	Teceo 48 LED 700mA	104 Watts	8.00 Metres	Galvanised Steel	
Y	35	STREET LIGHTING	BROADWAY	GRIMSBY	523737.34	407949.86	1998		44777	1 Urbis LED	Teceo 48 LED 700mA	104 Watts	8.00 Metres	Galvanised Steel	
Y	36	STREET LIGHTING	BROADWAY	GRIMSBY	523730.34	407916.53	1998		44778	1 Urbis LED	Teceo 48 LED 700mA	104 Watts	8.00 Metres	Galvanised Steel	
Y	37	STREET LIGHTING	BROADWAY	GRIMSBY	523747.83	407882.93	1998		44779	1 Urbis LED	Teceo 48 LED 500mA	79 Watts	8.00 Metres	Galvanised Steel	
Y	38	STREET LIGHTING	BROADWAY	GRIMSBY	523741.02	407850.98	1998		44780	1 Urbis LED	Teceo 48 LED 500mA	79 Watts	8.00 Metres	Galvanised Steel	
Y	39	STREET LIGHTING	BROADWAY	GRIMSBY	523763.67	407815.17	1998		44781	1 Urbis LED	Teceo 48 LED 500mA	79 Watts	8.00 Metres	Galvanised Steel	
Y	40	STREET LIGHTING	BROADWAY	GRIMSBY	523761.09	407785.07	1998		44782	1 Urbis LED	Teceo 48 LED 500mA	79 Watts	8.00 Metres	Galvanised Steel	
Y	41	STREET LIGHTING	BROADWAY	GRIMSBY	523784.84	407758.1	1999		44783	1 Urbis LED	Teceo 48 LED 500mA	79 Watts	8.00 Metres	Galvanised Steel	
Y	42	STREET LIGHTING	BROADWAY	GRIMSBY	523796.26	407728.27	1998		44784	1 Urbis LED	Teceo 48 LED 500mA	79 Watts	8.00 Metres	Galvanised Steel	
Y	43	STREET LIGHTING	BROADWAY	GRIMSBY	523786.68	407709.49	1998		44785	1 Urbis LED	Teceo 48 LED 500mA	79 Watts	8.00 Metres	Galvanised Steel	
Y	44	STREET LIGHTING	BROADWAY	GRIMSBY	523803.25	407690.62	1998		44786	1 Urbis LED	Teceo 48 LED 500mA	79 Watts	8.00 Metres	Galvanised Steel	
Y	45	STREET LIGHTING	BROADWAY	GRIMSBY	523806.93	407664.84	1998		44787	1 Urbis LED	Teceo 48 LED 500mA	79 Watts	8.00 Metres	Galvanised Steel	
Y	46	STREET LIGHTING	BROADWAY	GRIMSBY	523800.67	407630.22	1998		44788	1 Urbis LED	Teceo 48 LED 500mA	79 Watts	8.00 Metres	Galvanised Steel	
Y	47	STREET LIGHTING	BROADWAY	GRIMSBY	523823.87	407606.68	1998		44789	1 Urbis LED	Teceo 48 LED 500mA	79 Watts	8.00 Metres	Galvanised Steel	
Y	48	STREET LIGHTING	BROADWAY	GRIMSBY	523809.95	407576.68	1998		44790	1 Urbis LED	Teceo 48 LED 500mA	79 Watts	8.00 Metres	Galvanised Steel	
Y	1	STREET LIGHTING	BROCKLESBY PLACE	GRIMSBY	524517.54	407780.98	1998		44822	Urbis	Axia 16 LED 350mA	19 Watts	5.00 Metres	Galvanised Steel	
Y	2	STREET LIGHTING	BROCKLESBY PLACE	GRIMSBY	524506.15	407798.13	1998		44823	Urbis	Axia 16 LED 350mA	19 Watts	5.00 Metres	Galvanised Steel	
Y	3	STREET LIGHTING	BROCKLESBY PLACE	GRIMSBY	524490.46	407821.11	1998		44824	Urbis	Axia 16 LED 350mA	19 Watts	5.00 Metres	Galvanised Steel	
Y	4	STREET LIGHTING	BROCKLESBY PLACE	GRIMSBY	524471.72	407813.51	1998		44825	Urbis	Axia 16 LED 350mA	19 Watts	5.00 Metres	Galvanised Steel	
Y	5	STREET LIGHTING	BROCKLESBY PLACE	GRIMSBY	524459.45	407820.41	1998		44826	Urbis	Axia 16 LED 350mA	19 Watts	5.00 Metres	Galvanised Steel	
Y	6	STREET LIGHTING	BROCKLESBY PLACE	GRIMSBY	524462.86	407847.88	1998		44827	Urbis	Axia 16 LED 350mA	19 Watts	5.00 Metres	Galvanised Steel	
Y	7	STREET LIGHTING	BROCKLESBY PLACE	GRIMSBY	524479.7	407874.97	1998		44828	Urbis	Axia 16 LED 350mA	19 Watts	5.00 Metres	Galvanised Steel	
Y	8	STREET LIGHTING	BROCKLESBY PLACE	GRIMSBY	524486.03	407897.44	1998		44829	Urbis	Axia 16 LED 350mA	19 Watts	5.00 Metres	Galvanised Steel	
Y	1	STREET LIGHTING	BROCKLESBY ROAD	GRIMSBY	524522.43	407687.67	2016	31/03/2016	44830	Urbis	Axia 16 LED 350mA	19 Watts	6.00 Metres	Galvanised Steel	
Y	2	STREET LIGHTING	BROCKLESBY ROAD	GRIMSBY	524518.13	407726.91	1993		44831	Urbis	Axia 16 LED 350mA	19 Watts	5.00 Metres	Galvanised Steel	
Y	3	STREET LIGHTING	BROCKLESBY ROAD	GRIMSBY	524530.28	407766.09	1993		44832	Urbis	Axia 16 LED 350mA	19 Watts	5.00 Metres	Galvanised Steel	
Y	4	STREET LIGHTING	BROCKLESBY ROAD	GRIMSBY	524508	407754	2000		44833	Urbis	Axia 16 LED 350mA	19 Watts	6.00 Metres	Galvanised Steel	
Y	5	STREET LIGHTING	BROCKLESBY ROAD	GRIMSBY	524477	407766	2000		44834	Urbis	Axia 16 LED 350mA	19 Watts	6.00 Metres	Galvanised Steel	
Y	6	STREET LIGHTING	BROCKLESBY ROAD	GRIMSBY	524441.57	407769.1	2016	31/03/2016	44835	Urbis	Axia 16 LED 350mA	19 Watts	6.00 Metres	Galvanised Steel	
Y	7	STREET LIGHTING	BROCKLESBY ROAD	GRIMSBY	524397.77	407770.3	1993		44836	Urbis	Axia 16 LED 350mA	19 Watts	6.00 Metres	Galvanised Steel	
Y	1	STREET LIGHTING	CLARENDON ROAD	GRIMSBY	524286.84	407877.75	2003		46118	1 Urbis LED	Axia 16 LED 500mA	28 Watts	6.00 Metres	Stainless Steel	
Y	2	STREET LIGHTING	CLARENDON ROAD	GRIMSBY	524275.17	407849.2	2003		46119	1 Urbis LED	Axia 16 LED 500mA	28 Watts	6.00 Metres	Stainless Steel	
Y	3	STREET LIGHTING	CLARENDON ROAD	GRIMSBY	524279.32	407807.89	2015	30/07/2015	46120	1 Urbis LED	Axia 16 LED 500mA	28 Watts	6.00 Metres	Galvanised Steel	
Y	4	STREET LIGHTING	CLARENDON ROAD	GRIMSBY	524268.19	407764.4	2015	30/07/2015	46121	1 Urbis LED	Axia 16 LED 500mA	28 Watts	6.00 Metres	Galvanised Steel	
Y	5	STREET LIGHTING	CLARENDON ROAD	GRIMSBY	524270.21	407718.96	2015	30/07/2015	46122	1 Urbis LED	Axia 16 LED 500mA	28 Watts	6.00 Metres	Galvanised Steel	
Y	1	STREET LIGHTING	CROWLAND AVENUE	GRIMSBY	524741.38	407603.98	1992		47117	Urbis	Axia 16 LED 350mA	19 Watts	6.00 Metres	Galvanised Steel	
Y	2	STREET LIGHTING	CROWLAND AVENUE	GRIMSBY	524753.91	407626.76	1992		47118	1 Urbis LED	Axia 16 LED 500mA	28 Watts	6.00 Metres	Galvanised Steel	
Y	3	STREET LIGHTING	CROWLAND AVENUE	GRIMSBY	524745.43	407653.09	1992		47119	Urbis	Axia 16 LED 350mA	19 Watts	6.00 Metres	Galvanised Steel	
Y	4	STREET LIGHTING	CROWLAND AVENUE	GRIMSBY	524747.58	407679.35	1992		47120	Urbis	Axia 16 LED 350mA	19 Watts	6.00 Metres	Galvanised Steel	
Y	5	STREET LIGHTING	CROWLAND AVENUE	GRIMSBY	524760.24	407701.31	1992		47121	1 Urbis LED	Axia 16 LED 500mA	28 Watts	6.00 Metres	Galvanised Steel	
Y	6	STREET LIGHTING	CROWLAND AVENUE	GRIMSBY	524751.76	407726.44	1992		47122	Urbis	Axia 16 LED 350mA	19 Watts	6.00 Metres	Galvanised Steel	
Y	7	STREET LIGHTING	CROWLAND AVENUE	GRIMSBY	524765.18	407749.41	1992		47123	1 Urbis LED	Axia 16 LED 500mA	28 Watts	6.00 Metres	Galvanised Steel	
Y	8	STREET LIGHTING	CROWLAND AVENUE	GRIMSBY	524766.44	407774.98	1992		47124	1 Urbis LED	Axia 16 LED 500mA	28 Watts	6.00 Metres	Galvanised Steel	
Y	9	STREET LIGHTING	CROWLAND AVENUE	GRIMSBY	524758.47	407803.65	1992		47125	Urbis	Axia 16 LED 350mA	19 Watts	6.00 Metres	Galvanised Steel	
Y	10	STREET LIGHTING	CROWLAND AVENUE	GRIMSBY	524760.11	407829.22	1992		47126	Urbis	Axia 16 LED 350mA	19 Watts	6.00 Metres	Galvanised Steel	
Y	11	STREET LIGHTING	CROWLAND AVENUE	GRIMSBY	524761	407856.75	1992		47127	Urbis	Axia 16 LED 350mA	19 Watts	6.00 Metres	Galvanised Steel	
Y	12	STREET LIGHTING	CROWLAND AVENUE	GRIMSBY	524770.24	407881.24	1992		47128	1 Urbis LED	Axia 16 LED 500mA	28 Watts	6.00 Metres	Galvanised Steel	
Y	13	STREET LIGHTING	CROWLAND AVENUE	GRIMSBY	524757.58	407904.97	1992		47129	Urbis	Axia 16 LED 350mA	19 Watts	6.00 Metres	Galvanised Steel	
Y	14	STREET LIGHTING	CROWLAND AVENUE	GRIMSBY	524754.67	407933.07	1992		47130	Urbis	Axia 16 LED 350mA	19 Watts	6.00 Metres	Galvanised Steel	
Y	15	STREET LIGHTING	CROWLAND AVENUE	GRIMSBY	524762.39	407960.22	1992		47131	1 Urbis LED	Axia 16 LED 500mA	28 Watts	6.00 Metres	Galvanised Steel	
Y	16	STREET LIGHTING	CROWLAND AVENUE	GRIMSBY	524749.22	407982.81	1992		47132	1 Urbis LED	Axia 16 LED 500mA	28 Watts	6.00 Metres	Galvanised Steel	
Y	17	STREET LIGHTING	CROWLAND AVENUE	GRIMSBY	524757.45	408007.43	1992		47133	1 Urbis LED	Axia 16 LED 500mA	28 Watts	6.00 Metres	Galvanised Steel	
Y	1	STREET LIGHTING	ELLESMERE RISE	GRIMSBY	523719.56	407498.71	2017	30/06/2017	66833	1 Urbis LED	Axia 16 LED 500mA	28 Watts	6.00 Metres	Galvanised Steel	
Y	2	STREET LIGHTING	ELLESMERE RISE	GRIMSBY	523724.03	407469.32	2017	30/06/2017	47918	1 Urbis LED	Axia 16 LED 500mA	28 Watts	6.00 Metres	Galvanised Steel	
Y	3	STREET LIGHTING	ELLESMERE RISE	GRIMSBY	523724.29	407436.51	2017	30/06/2017	47919	1 Urbis LED	Axia 16 LED 500mA	28 Watts	6.00 Metres	Galvanised Steel	
Y	1	STREET LIGHTING	EVESHAM AVENUE	GRIMSBY	524136.49	407930.67	2008		48236	1 Urbis LED	Axia 16 LED 500mA	28 Watts	6.00 Metres	Steel	
Y	2	STREET LIGHTING	EVESHAM AVENUE	GRIMSBY	524144.77	407963.3	2008		48237	1 Urbis LED	Axia 16 LED 500mA	28 Watts	6.00 Metres	Steel	
Y	3	STREET LIGHTING	EVESHAM AVENUE	GRIMSBY	524142.63	407991.93	2008		48238	1 Urbis LED	Axia 16 LED 500mA	28 Watts	6.00 Metres	Steel	
Y	4	STREET LIGHTING	EVESHAM AVENUE	GRIMSBY	524128.76	408026.14	2008		48239	1 Urbis LED	Axia 16 LED 500mA	28 Watts	6.00 Metres	Steel	
Y	5	STREET LIGHTING	EVESHAM AVENUE	GRIMSBY	524134.6	408059.03	2008		48240	1 Urbis LED	Axia 16 LED 500mA	28 Watts	6.00 Metres	Steel	
Y	6	STREET LIGHTING	EVESHAM AVENUE	GRIMSBY	524118.5	408085.8	2008		48241	1 Urbis LED	Axia 16 LED 500mA	28 Watts	6.00 Metres	Steel	
Y	7	STREET LIGHTING	EVESHAM AVENUE	GRIMSBY	524113.58	408114.03	2008		48242	1 Urbis LED	Axia 16 LED 500mA	28 Watts	6.00 Metres	Steel	
Y	8	STREET LIGHTING	EVESHAM AVENUE	GRIMSBY	524120.37	408140.24	2008		48243	1 Urbis LED	Axia 16 LED 500mA	28 Watts	6.00 Metres	Steel	
Y	1	STREET LIGHTING	LACEBY ROAD SERVICE ROAD SOUTH	GRIMSBY	524257.62	407604.66	1963		52038	1 Urbis LED	Axia 16 LED 500mA	28 Watts	5.00 Metres	Steel	
Y	2	STREET LIGHTING	LACEBY ROAD SERVICE ROAD SOUTH	GRIMSBY	524223.44	407606.5	1963		52039	1 Urbis LED	Axia 16 LED 500mA	28 Watts	5.00 Metres	Steel	
Y	3	STREET LIGHTING	LACEBY ROAD SERVICE ROAD SOUTH	GRIMSBY	524192.18	407591.5	2012		52040	1 Urbis LED	Axia 16 LED 500mA	28 Watts	6.00 Metres	Galvanised Steel	
Y	4	STREET LIGHTING	LACEBY ROAD SERVICE ROAD SOUTH	GRIMSBY	524156.48	407584.16	2012		52042	1 Urbis LED	Axia 16 LED 500mA	28 Watts	6.00 Metres	Galvanised Steel	
Y	5	STREET LIGHTING	LACEBY ROAD SERVICE ROAD SOUTH	GRIMSBY	524115.98	407581.5	2016		52043	1 Urbis LED	Axia 16 LED 500mA	28 Watts	6.00 Metres	Galvanised Steel	
Y	6	STREET LIGHTING	LACEBY ROAD SERVICE ROAD SOUTH	GRIMSBY	524080.16	407567.89	2016		52044	1 Urbis LED	Axia 16 LED 500mA	28 Watts	6.00 Metres	Galvanised Steel	
Y	7	STREET LIGHTING	LACEBY ROAD SERVICE ROAD SOUTH	GRIMSBY	524039.27	407565.49	2016		52045	1 Urbis LED	Axia 16 LED 500mA	28 Watts	6.00 Metres	Galvanised Steel	
Y	8	STREET LIGHTING	LACEBY ROAD SERVICE ROAD SOUTH	GRIMSBY	524021.8	407545.81	2016		52046	1 Urbis LED	Axia 16 LED 500mA	28 Watts	6.00 Metres	Steel	
Y	9	STREET LIGHTING	LACEBY ROAD SERVICE ROAD SOUTH	GRIMSBY	523999.91	407557.26	2002		52047	1 Urbis LED	Axia 16 LED 500mA	28 Watts	6.00 Metres	Stainless Steel	
Y	10	STREET LIGHTING	LACEBY ROAD SERVICE ROAD SOUTH	GRIMSBY	523984.34	407538.15	2016		52048	1 Urbis LED	Axia 16 LED 500mA	28 Watts	6.00 Metres	Steel	
Y	11	STREET LIGHTING	LACEBY ROAD SERVICE ROAD SOUTH	GRIMSBY	523962.95	407544.04	2016		52049	1 Urbis LED	Axia 16 LED 500mA	28 Watts	6.00 Metres	Galvanised Steel	
Y	12	STREET LIGHTING	LACEBY ROAD SERVICE ROAD SOUTH	GRIMSBY	523920	407541.7	2006		52050	1 Urbis LED	Axia 16 LED 500mA	28 Watts	6.00 Metres	Stainless Steel	
Y	13	STREET LIGHTING	LACEBY ROAD SERVICE ROAD SOUTH	GRIMSBY	523884.97	407528.72	1999		52051	1 Urbis LED	Axia 16 LED 500mA	28 Watts	5.00 Metres	Galvanised Steel	

Y	14	STREET LIGHTING	LACEBY ROAD SERVICE ROAD SOUTH	GRIMSBY	523849.28	407530.86	2002		52052	1 Urbis LED	Axia 16 LED 500mA	28 Watts	6.00 Metres	Stainless Steel	
Y	15	STREET LIGHTING	LACEBY ROAD SERVICE ROAD SOUTH	GRIMSBY	523812.82	407519.91	2016		52053	1 Urbis LED	Axia 16 LED 500mA	28 Watts	6.00 Metres	Galvanised Steel	
Y	16	STREET LIGHTING	LACEBY ROAD SERVICE ROAD SOUTH	GRIMSBY	523776.55	407520.83	2000		52055	1 Urbis LED	Axia 16 LED 500mA	28 Watts	6.00 Metres	Galvanised Steel	
Y	17	STREET LIGHTING	LACEBY ROAD SERVICE ROAD SOUTH	GRIMSBY	523745.99	407510.52	2016		52056	1 Urbis LED	Axia 16 LED 500mA	28 Watts	6.00 Metres	Galvanised Steel	
Y	18	STREET LIGHTING	LACEBY ROAD SERVICE ROAD SOUTH	GRIMSBY	523713.03	407511.9	2000		52057	1 Urbis LED	Axia 16 LED 500mA	28 Watts	6.00 Metres	Galvanised Steel	
Y	1	STREET LIGHTING	LACEBY ROAD SERVICE ROAD NORTH	GRIMSBY	524174.44	407641.03	2008		52032	1 Urbis LED	Axia 16 LED 500mA	28 Watts	6.00 Metres	Steel	
Y	2	STREET LIGHTING	LACEBY ROAD SERVICE ROAD NORTH	GRIMSBY	524145.98	407635.14	2008		52033	1 Urbis LED	Axia 16 LED 500mA	28 Watts	6.00 Metres	Steel	
Y	3	STREET LIGHTING	LACEBY ROAD SERVICE ROAD NORTH	GRIMSBY	524134.95	407621.38	2008		52034	1 Urbis LED	Axia 16 LED 500mA	28 Watts	6.00 Metres	Steel	
Y	4	STREET LIGHTING	LACEBY ROAD SERVICE ROAD NORTH	GRIMSBY	524111.65	407619.31	2008		52035	1 Urbis LED	Axia 16 LED 500mA	28 Watts	6.00 Metres	Steel	
Y	5	STREET LIGHTING	LACEBY ROAD SERVICE ROAD NORTH	GRIMSBY	524080.78	407613.94	2008		52036	1 Urbis LED	Axia 16 LED 500mA	28 Watts	6.00 Metres	Steel	
Y	6	STREET LIGHTING	LACEBY ROAD SERVICE ROAD NORTH	GRIMSBY	524039.89	407612.45	2008		52037	1 Urbis LED	Axia 16 LED 500mA	28 Watts	6.00 Metres	Steel	
Y	1	STREET LIGHTING	LITTLE COATES ROAD	GRIMSBY	524642.29	408835.5	1995		52640	1 Urbis LED	Teceo 48 LED 700mA	104 Watts	10.00 Metres	Galvanised Steel	
Y	2	STREET LIGHTING	LITTLE COATES ROAD	GRIMSBY	524665.83	408812.52	1995		52641	1 Urbis LED	Teceo 48 LED 700mA	104 Watts	10.00 Metres	Galvanised Steel	
Y	3	STREET LIGHTING	LITTLE COATES ROAD	GRIMSBY	524664.64	408781.71	1995		52642	1 Urbis LED	Teceo 48 LED 700mA	104 Watts	10.00 Metres	Galvanised Steel	
Y	4	STREET LIGHTING	LITTLE COATES ROAD	GRIMSBY	524640.01	408743.73	1995		52643	1 Urbis LED	Teceo 48 LED 700mA	104 Watts	10.00 Metres	Galvanised Steel	
Y	5	STREET LIGHTING	LITTLE COATES ROAD	GRIMSBY	524630.39	408712.27	1995		52644	1 Urbis LED	Teceo 48 LED 700mA	104 Watts	10.00 Metres	Galvanised Steel	
Y	6	STREET LIGHTING	LITTLE COATES ROAD	GRIMSBY	524621.89	408667.98	1995		52645	1 Urbis LED	Teceo 48 LED 700mA	104 Watts	10.00 Metres	Galvanised Steel	
Y	7	STREET LIGHTING	LITTLE COATES ROAD	GRIMSBY	524636.7	408634.12	1995		52646	1 Urbis LED	Teceo 48 LED 700mA	104 Watts	10.00 Metres	Galvanised Steel	
Y	8	STREET LIGHTING	LITTLE COATES ROAD	GRIMSBY	524621.14	408598.29	1995		52647	1 Urbis LED	Teceo 48 LED 700mA	104 Watts	10.00 Metres	Galvanised Steel	
Y	9	STREET LIGHTING	LITTLE COATES ROAD	GRIMSBY	524627.95	408555.58	1995		52648	1 Urbis LED	Teceo 48 LED 700mA	104 Watts	10.00 Metres	Galvanised Steel	
Y	10	STREET LIGHTING	LITTLE COATES ROAD	GRIMSBY	524604.02	408526.03	1995		52649	1 Urbis LED	Teceo 48 LED 700mA	104 Watts	10.00 Metres	Galvanised Steel	
Y	11	STREET LIGHTING	LITTLE COATES ROAD	GRIMSBY	524596.62	408502.38	2021	01/02/2021	69802	Urbis	Axia 48 LED 960mA	104 Watts	10.00 Metres	Galvanised Steel	
Y	12	STREET LIGHTING	LITTLE COATES ROAD	GRIMSBY	524584.5	408463.12	2021	01/02/2021	69803	Urbis	Axia 48 LED 960mA	104 Watts	10.00 Metres	Galvanised Steel	
Y	13	STREET LIGHTING	LITTLE COATES ROAD	GRIMSBY	524590.38	408420.55	1995		52652	1 Urbis LED	Teceo 48 LED 700mA	104 Watts	10.00 Metres	Galvanised Steel	
Y	14	STREET LIGHTING	LITTLE COATES ROAD	GRIMSBY	524569.55	408403.47	2021	01/02/2021	69804	Urbis	Axia 48 LED 960mA	104 Watts	10.00 Metres	Galvanised Steel	
Y	15	STREET LIGHTING	LITTLE COATES ROAD	GRIMSBY	524552.17	408366.49	2012		69806	Urbis	Axia 16 LED 350mA	19 Watts	6.00 Metres	Steel	
Y	16	STREET LIGHTING	LITTLE COATES ROAD	GRIMSBY	524554.14	408327.28	2021	01/02/2021	69805	Urbis	Axia 48 LED 960mA	104 Watts	10.00 Metres	Galvanised Steel	
Y	17	STREET LIGHTING	LITTLE COATES ROAD	GRIMSBY	524523.98	408315.26	2019	29/03/2019	67356	Urbis	Teceo 48 LED 700mA	104 Watts	12.00 Metres	Galvanised Steel	
Y	18	STREET LIGHTING	LITTLE COATES ROAD	GRIMSBY	524532.75	408292.94	2019	13/11/2019	67700	Urbis	Ampera 48 LED 700mA	104 Watts	12.00 Metres	Galvanised Steel	
Y	19	STREET LIGHTING	LITTLE COATES ROAD	GRIMSBY	524509.12	408275.48	1995		52658	1 Urbis LED	Teceo 48 LED 700mA	104 Watts	10.00 Metres	Galvanised Steel	
Y	20	STREET LIGHTING	LITTLE COATES ROAD	GRIMSBY	524507.46	408234.42	1995		52659	1 Urbis LED	Teceo 48 LED 700mA	104 Watts	10.00 Metres	Galvanised Steel	
Y	21	STREET LIGHTING	LITTLE COATES ROAD	GRIMSBY	524482.61	408207.08	1995		52660	1 Urbis LED	Teceo 48 LED 700mA	104 Watts	10.00 Metres	Galvanised Steel	
Y	22	STREET LIGHTING	LITTLE COATES ROAD	GRIMSBY	524468.98	408175.5	1995		52661	1 Urbis LED	Teceo 48 LED 700mA	104 Watts	10.00 Metres	Galvanised Steel	
Y	23	STREET LIGHTING	LITTLE COATES ROAD	GRIMSBY	524466.08	408133.3	2021	06/09/2021	68621	Urbis	Teceo 48 LED 700mA	104 Watts	12.00 Metres	Galvanised Steel	
Y	24	STREET LIGHTING	LITTLE COATES ROAD	GRIMSBY	524438.78	408101.77	1995		52663	1 Urbis LED	Teceo 48 LED 700mA	104 Watts	10.00 Metres	Galvanised Steel	
Y	25	STREET LIGHTING	LITTLE COATES ROAD	GRIMSBY	524438.58	408060.5	2021	06/09/2021	68622	Urbis	Teceo 48 LED 700mA	104 Watts	12.00 Metres	Galvanised Steel	
Y	26	STREET LIGHTING	LITTLE COATES ROAD	GRIMSBY	524412.29	408032.13	1995		52665	1 Urbis LED	Teceo 48 LED 700mA	104 Watts	10.00 Metres	Galvanised Steel	
Y	27	STREET LIGHTING	LITTLE COATES ROAD	GRIMSBY	524412.85	407993.83	1995		52666	1 Urbis LED	Teceo 48 LED 700mA	104 Watts	10.00 Metres	Galvanised Steel	
Y	28	STREET LIGHTING	LITTLE COATES ROAD	GRIMSBY	524392.26	407962.76	1995		52667	1 Urbis LED	Teceo 48 LED 700mA	104 Watts	10.00 Metres	Galvanised Steel	
Y	29	STREET LIGHTING	LITTLE COATES ROAD	GRIMSBY	524383.24	407921.25	1995		52668	1 Urbis LED	Teceo 48 LED 700mA	104 Watts	10.00 Metres	Galvanised Steel	
Y	30	STREET LIGHTING	LITTLE COATES ROAD	GRIMSBY	524392.63	407905.32	1995		52669	1 Urbis LED	Teceo 48 LED 700mA	104 Watts	10.00 Metres	Galvanised Steel	
Y	31	STREET LIGHTING	LITTLE COATES ROAD	GRIMSBY	524374.22	407875.86	1995		52670	1 Urbis LED	Teceo 48 LED 700mA	104 Watts	10.00 Metres	Galvanised Steel	
Y	32	STREET LIGHTING	LITTLE COATES ROAD	GRIMSBY	524366.85	407840.88	1995		52671	1 Urbis LED	Teceo 48 LED 700mA	104 Watts	10.00 Metres	Galvanised Steel	
Y	33	STREET LIGHTING	LITTLE COATES ROAD	GRIMSBY	524369.25	407796.42	1995		52672	1 Urbis LED	Teceo 48 LED 700mA	104 Watts	10.00 Metres	Galvanised Steel	
Y	34	STREET LIGHTING	LITTLE COATES ROAD	GRIMSBY	524346.78	407765.21	1995		52673	1 Urbis LED	Teceo 48 LED 700mA	104 Watts	10.00 Metres	Galvanised Steel	
Y	35	STREET LIGHTING	LITTLE COATES ROAD	GRIMSBY	524351.2	407726.27	1995		52674	1 Urbis LED	Teceo 48 LED 700mA	104 Watts	10.00 Metres	Galvanised Steel	
Y	36	STREET LIGHTING	LITTLE COATES ROAD	GRIMSBY	524337.02	407690.18	1995		52675	1 Urbis LED	Teceo 48 LED 700mA	104 Watts	10.00 Metres	Galvanised Steel	
Y	1	STREET LIGHTING	STROYKINS CLOSE	GRIMSBY	524667	408740.26	2002		58536	Urbis	Axia 16 LED 350mA	19 Watts	5.00 Metres	Stainless Steel	
Y	2	STREET LIGHTING	STROYKINS CLOSE	GRIMSBY	524693.54	408744.13	2002		58537	Urbis	Axia 16 LED 350mA	19 Watts	5.00 Metres	Stainless Steel	
Y	3	STREET LIGHTING	STROYKINS CLOSE	GRIMSBY	524725.47	408754.33	2002		58538	Urbis	Axia 16 LED 350mA	19 Watts	5.00 Metres	Stainless Steel	
Y	4	STREET LIGHTING	STROYKINS CLOSE	GRIMSBY	524741.22	408783.07	2002		58539	Urbis	Axia 16 LED 350mA	19 Watts	5.00 Metres	Stainless Steel	
Y	5	STREET LIGHTING	STROYKINS CLOSE	GRIMSBY	524736.74	408819.5	2002		58540	Urbis	Axia 16 LED 350mA	19 Watts	5.00 Metres	Stainless Steel	
Y	6	STREET LIGHTING	STROYKINS CLOSE	GRIMSBY	524743.57	408852.89	2002		58541	Urbis	Axia 16 LED 350mA	19 Watts	5.00 Metres	Stainless Steel	
Y	7	STREET LIGHTING	STROYKINS CLOSE	GRIMSBY	524759.93	408877.75	2002		58542	Urbis	Axia 16 LED 350mA	19 Watts	5.00 Metres	Stainless Steel	
Y	8	STREET LIGHTING	STROYKINS CLOSE	GRIMSBY	524770.26	408893.77	2002		58543	Urbis	Axia 16 LED 350mA	19 Watts	5.00 Metres	Stainless Steel	
Y	1	STREET LIGHTING	LONGFIELD ROAD	GRIMSBY	524211.31	407877.26	2011		52755	1 Urbis LED	Axia 16 LED 500mA	28 Watts	6.00 Metres	Steel	
Y	2	STREET LIGHTING	LONGFIELD ROAD	GRIMSBY	524220.75	407845.11	2011		52756	1 Urbis LED	Axia 16 LED 500mA	28 Watts	6.00 Metres	Steel	
Y	3	STREET LIGHTING	LONGFIELD ROAD	GRIMSBY	524221.9	407812.73	2011		52757	1 Urbis LED	Axia 16 LED 500mA	28 Watts	6.00 Metres	Steel	
Y	4	STREET LIGHTING	LONGFIELD ROAD	GRIMSBY	524214.25	407778.78	2011		52758	1 Urbis LED	Axia 16 LED 500mA	28 Watts	6.00 Metres	Steel	
Y	5	STREET LIGHTING	LONGFIELD ROAD	GRIMSBY	524223.35	407749.95	2011		52759	1 Urbis LED	Axia 16 LED 500mA	28 Watts	6.00 Metres	Steel	
Y	1	STREET LIGHTING	MALCOLM ROAD	GRIMSBY	524534.1	407794.12	1993		53097	1 Urbis LED	Axia 16 LED 500mA	28 Watts	6.00 Metres	Galvanised Steel	
Y	2	STREET LIGHTING	MALCOLM ROAD	GRIMSBY	524550.69	407817.73	1993		53098	1 Urbis LED	Axia 16 LED 500mA	28 Watts	6.00 Metres	Galvanised Steel	
Y	3	STREET LIGHTING	MALCOLM ROAD	GRIMSBY	524567.14	407845.39	1993		53099	1 Urbis LED	Axia 16 LED 500mA	28 Watts	6.00 Metres	Galvanised Steel	
Y	4	STREET LIGHTING	MALCOLM ROAD	GRIMSBY	524574.86	407876.65	1993		53100	1 Urbis LED	Axia 16 LED 500mA	28 Watts	6.00 Metres	Galvanised Steel	
Y	5	STREET LIGHTING	MALCOLM ROAD	GRIMSBY	524573.47	407909.94	1993		53101	1 Urbis LED	Axia 16 LED 500mA	28 Watts	6.00 Metres	Galvanised Steel	
Y	6	STREET LIGHTING	MALCOLM ROAD	GRIMSBY	524585.88	407937.73	1993		53102	1 Urbis LED	Axia 16 LED 500mA	28 Watts	6.00 Metres	Galvanised Steel	
Y	7	STREET LIGHTING	MALCOLM ROAD	GRIMSBY	524580.82	407969.24	1993		53103	1 Urbis LED	Axia 16 LED 500mA	28 Watts	6.00 Metres	Galvanised Steel	
Y	8	STREET LIGHTING	MALCOLM ROAD	GRIMSBY	524592.97	407997.6	1993		53104	1 Urbis LED	Axia 16 LED 500mA	28 Watts	6.00 Metres	Galvanised Steel	
Y	1	STREET LIGHTING	NEWBURY GROVE	GRIMSBY	524313.6	407959.99	2003		54083	Urbis	Axia 16 LED 350mA	19 Watts	6.00 Metres	Stainless Steel	
Y	2	STREET LIGHTING	NEWBURY GROVE	GRIMSBY	524291.7	407959.99	2003		54084	Urbis	Axia 16 LED 350mA	19 Watts	6.00 Metres	Stainless Steel	
Y	3	STREET LIGHTING	NEWBURY GROVE	GRIMSBY	524291.41	407976.65	2003		54085	Urbis	Axia 16 LED 350mA	19 Watts	6.00 Metres	Stainless Steel	
Y	4	STREET LIGHTING	NEWBURY GROVE	GRIMSBY	524314.74	407976.93	2003		54086	Urbis	Axia 16 LED 350mA	19 Watts	6.00 Metres	Stainless Steel	
Y	1	STREET LIGHTING	PERSHORE AVENUE	GRIMSBY	524153	407870	2009		55316	1 Urbis LED	Teceo 32 LED 500mA	52 Watts	8.00 Metres	Steel	
Y	2	STREET LIGHTING	PERSHORE AVENUE	GRIMSBY	524143	407837	2009		55317	1 Urbis LED	Teceo 32 LED 500mA	52 Watts	8.00 Metres	Steel	
Y	3	STREET LIGHTING	PERSHORE AVENUE	GRIMSBY	524157	407806	2009		55318	1 Urbis LED	Teceo 32 LED 500mA	52 Watts	8.00 Metres	Steel	
Y	4	STREET LIGHTING	PERSHORE AVENUE	GRIMSBY	524160	407773	2009		55319	1 Urbis LED	Teceo 32 LED 500mA	52 Watts	8.00 Metres	Steel	
Y	5	STREET LIGHTING	PERSHORE AVENUE	GRIMSBY	524151	407738	2009		55320	1 Urbis LED	Teceo 32 LED 500mA	52 Watts	8.00 Metres	Steel	
Y	6	STREET LIGHTING	PERSHORE AVENUE	GRIMSBY	524159	407707	2009		55321	1 Urbis LED	Teceo 32 LED 500mA	52 Watts	8.00 Metres	Steel	
Y	7	STREET LIGHTING	PERSHORE AVENUE	GRIMSBY	524128	407689	2009		55322	1 Urbis LED	Teceo 32 LED 500mA	52 Watts	8.00 Metres	Steel	
Y	8	STREET LIGHTING	PERSHORE AVENUE	GRIMSBY	524101	407696	2009		55323	1 Urbis LED	Teceo 32 LED 500mA	52 Watts	8.00 Metres	Steel	
Y	9	STREET LIGHTING	PERSHORE AVENUE	GRIMSBY	524067	407688	2009		55324	1 Urbis LED	Teceo 32 LED 500mA	52 Watts	8.00 Metres	Steel	
Y	10	STREET LIGHTING	PERSHORE AVENUE	GRIMSBY	524040	407673	2009		55325	1 Urbis LED	Teceo 32 LED 500mA	52 Watts	8.00 Metres	Steel	
Y	11	STREET LIGHTING	PERSHORE AVENUE	GRIMSBY	524026	407700	2009		55326	1 Urbis LED	Teceo 32 LED 500mA	52 Watts	8.00 Metres	Steel	
Y	12	STREET LIGHTING	PERSHORE AVENUE	GRIMSBY	524012	407726	2009		55327	1 Urbis LED	Teceo 32 LED 500mA	52 Watts	8.00 Metres	Steel	
Y	13	STREET LIGHTING	PERSHORE AVENUE	GRIMSBY	523990	407744	2009		55328	1 Urbis LED	Teceo 32 LED 500mA	52 Watts	8.00 Metres	Steel	
Y	14	STREET LIGHTING	PERSHORE AVENUE	GRIMSBY	523980	407775	2009		55329	1 Urbis LED	Teceo 32 LED 500mA	52 Watts	8.00 Metres	Steel	
Y	15	STREET LIGHTING	PERSHORE AVENUE	GRIMSBY	523980	407815	2007		55330	1 Urbis LED	Teceo 32 LED 500mA	52 Watts	8.00 Metres	Steel	
Y	16	STREET LIGHTING	PERSHORE AVENUE	GRIMSBY	523959	407843	2009		55331	1 Urbis LED	Teceo 32 LED 500mA	52 Watts	8.00 Metres	Steel	
Y	17	STREET LIGHTING	PERSHORE AVENUE	GRIMSBY	523962	407873	2009		55332	1 Urbis LED	Teceo 32 LED 500mA	52 Watts	8.00 Metres	Steel	
Y	18	STREET LIGHTING	PERSHORE AVENUE	GRIMSBY	523942	407896	2009		55333	1 Urbis LED	Teceo 40 LED 500mA	64 Watts	8.00 Metres	Steel	
Y	19	STREET LIGHTING	PERSHORE AVENUE	GRIMSBY	523947	407921	2009		55334	1 Urbis LED	Teceo 40 LED 500mA	64 Watts	8.00 Metres	Steel	
Y	20	STREET LIGHTING	PERSHORE AVENUE	GRIMSBY	523927	407947	2009		55335	1 Urbis LED	Teceo 40 LED 500mA	64 Watts	8.00 Metres	Steel	
Y	21	STREET LIGHTING	PERSHORE AVENUE	GRIMSBY	523930	407979	2009		55336	1 Urbis LED	Teceo 40 LED 500mA	64 Watts	8.00 Metres	Steel	
Y	22	STREET LIGHTING	PERSHORE AVENUE	GRIMSBY	523913	408008	2009		55337	1 Urbis LED	Teceo 40 LED 500mA	64 Watts	8.00 Metres	Steel	
Y	23	STREET LIGHTING	PERSHORE AVENUE	GRIMSBY	523920	408044	2009		55338	1 Urbis LED	Teceo 40 LED 500mA	64 Watts	8.00 Metres	Steel	
Y	24	STREET LIGHTING	PERSHORE AVENUE	GRIMSBY	523902	408074	2009		55339	1 Urbis LED	Teceo 40 LED 500mA	64 Watts	8.00 Metres	Steel	
Y	25	STREET LIGHTING	PERSHORE AVENUE	GRIMSBY	523909	408108	2009		55340	1 Urbis LED	Teceo 40 LED 500mA	64 Watts	8.00 Metres	Steel	
Y	1	STREET LIGHTING	REVESBY AVENUE	GRIMSBY	524733.65	407692.99	2017	30/06/2017	66900	1 Urbis LED	Teceo 16 LED 500mA	28 Watts	6.00 Metres	Galvanised Steel	
Y	2	STREET LIGHTING	REVESBY AVENUE	GRIMSBY	524702.42	407712.32	2017	30/06/2017	56027	1 Urbis LED	Teceo 16 LED 500mA	28 Watts	6.00 Metres	Galvanised Steel	
Y	3	STREET LIGHTING	REVESBY AVENUE	GRIMSBY	524659.71	407716.69	1994		56028	1 Urbis LED	Teceo 16 LED 500mA	28 Watts	6.00 Metres	Galvanised Steel	
Y	4	STREET LIGHTING	REVESBY AVENUE	GRIMSBY	524623.02	407737.74	2017	30/06/2017	56029	1 Urbis LED	Teceo 16 LED 500mA	28 Watts	6.00 Metres	Galvanised Steel	
Y	1	STREET LIGHTING	THE RIDGEWAY	GRIMSBY	524225.04	407573.94	2017	30/06/2017	59033	1 Urbis LED	Axia 16 LED 500mA	28 Watts	6.00 Metres	Galvanised Steel	
Y	2	STREET LIGHTING	THE RIDGEWAY	GRIMSBY	524239.38	407545.94	2017	30/06/2017	59034	1 Urbis LED	Axia 16 LED 500mA	28 Watts	6.00 Metres	Galvanised Steel	
Y	3	STREET LIGHTING	THE RIDGEWAY	GRIMSBY	524240.51	407515.45	2017	30/06/2017	59035	1 Urbis LED	Axia 16 LED 500mA	28 Watts	6.00 Metres	Galvanised Steel	
Y	4	STREET LIGHTING	THE RIDGEWAY	GRIMSBY	524200.22	407514.16	2017	30/06/2017	59036	1 Urbis LED	Axia 16 LED 500mA	28 Watts	6.00 Metres	Galvanised Steel	
Y	5	STREET LIGHTING	THE RIDGEWAY	GRIMSBY	524166.29	407499.56	2017	30/06/2017	59037	1 Urbis LED	Axia 16 LED 500mA	28 Watts	6.00 Metres	Galvanised Steel	
Y	6	STREET LIGHTING	THE RIDGEWAY	GRIMSBY	524127.38	407501.02	2017	30/06/2017	59038	1 Urbis LED	Axia 16 LED 500mA	28 Watts	6.00 Metres	Galvanised Steel	
Y	7	STREET LIGHTING	THE RIDGEWAY	GRIMSBY	524092.51	407486.42	2017	30/06/2017	59039	1 Urbis LED	Axia 16 LED 500mA	28 Watts	6.00 Metres	Galvanised Steel	
Y	8	STREET LIGHTING	THE RIDGEWAY	GRIMSBY	524054.11	407488.48	2017	30/06/2017	59040	1 Urbis LED	Axia 16 LED 500mA	28 Watts	6.00 Metres	Galvanised Steel	
Y	9	STREET LIGHTING	THE RIDGEWAY	GRIMSBY	524017.18	407473.02	2017	30/06/2017	59041	1 Urbis LED	Axia 16 LED 500mA	28 Watts	6.00 Metres	Galvanised Steel	

Y	10	STREET LIGHTING	THE RIDGEWAY	GRIMSBY	523979.82	407475.76	2017	30/06/2017	59042	1 Urbis LED	Axia 16 LED 500mA	28 Watts	6.00 Metres	Galvanised Steel	
Y	11	STREET LIGHTING	THE RIDGEWAY	GRIMSBY	523941.08	407461.85	2013		59043	1 Urbis LED	Axia 16 LED 500mA	28 Watts	6.00 Metres	Galvanised Steel	
Y	12	STREET LIGHTING	THE RIDGEWAY	GRIMSBY	523903.21	407465.29	2017	30/06/2017	59044	1 Urbis LED	Axia 16 LED 500mA	28 Watts	6.00 Metres	Galvanised Steel	
Y	13	STREET LIGHTING	THE RIDGEWAY	GRIMSBY	523868.51	407455.06	2015		59045	1 Urbis LED	Axia 16 LED 500mA	28 Watts	6.00 Metres	Galvanised Steel	
Y	14	STREET LIGHTING	THE RIDGEWAY	GRIMSBY	523828.99	407461.51	2017	30/06/2017	59046	1 Urbis LED	Axia 16 LED 500mA	28 Watts	6.00 Metres	Galvanised Steel	
Y	15	STREET LIGHTING	THE RIDGEWAY	GRIMSBY	523788.27	407453.35	2017	30/06/2017	59047	1 Urbis LED	Axia 16 LED 500mA	28 Watts	6.00 Metres	Galvanised Steel	
Y	16	STREET LIGHTING	THE RIDGEWAY	GRIMSBY	523786.65	407488.31	2017	30/06/2017	59048	1 Urbis LED	Axia 16 LED 500mA	28 Watts	6.00 Metres	Galvanised Steel	
Y	1	STREET LIGHTING	ROSEMARY AVENUE	GRIMSBY	524643.15	408586.12	2011		56282	1 Urbis LED	Axia 16 LED 500mA	28 Watts	6.00 Metres	Steel	
Y	2	STREET LIGHTING	ROSEMARY AVENUE	GRIMSBY	524666.4	408576.57	2011		56283	1 Urbis LED	Axia 16 LED 500mA	28 Watts	6.00 Metres	Steel	
Y	3	STREET LIGHTING	ROSEMARY AVENUE	GRIMSBY	524688.77	408511.19	2011		56287	1 Urbis LED	Axia 16 LED 500mA	28 Watts	6.00 Metres	Steel	
Y	4	STREET LIGHTING	ROSEMARY AVENUE	GRIMSBY	524694.48	408541.98	2011		66401	1 Urbis LED	Axia 16 LED 500mA	28 Watts	6.00 Metres	Steel	
Y	5	STREET LIGHTING	ROSEMARY AVENUE	GRIMSBY	524696.53	408575.31	2011		56284	1 Urbis LED	Axia 16 LED 500mA	28 Watts	6.00 Metres	Steel	
Y	6	STREET LIGHTING	ROSEMARY AVENUE	GRIMSBY	524690.65	408611.41	2011		56285	1 Urbis LED	Axia 16 LED 500mA	28 Watts	6.00 Metres	Steel	
Y	7	STREET LIGHTING	ROSEMARY AVENUE	GRIMSBY	524701.07	408637.74	2011		56286	1 Urbis LED	Axia 16 LED 500mA	28 Watts	6.00 Metres	Steel	
Y	1	STREET LIGHTING	ST IVES CRESCENT	GRIMSBY	524356.49	408272.49	1994		57728	1 Urbis LED	Teceo 16 LED 500mA	28 Watts	6.00 Metres	Galvanised Steel	
Y	2	STREET LIGHTING	ST IVES CRESCENT	GRIMSBY	524373.07	408250.59	1994		57729	1 Urbis LED	Teceo 16 LED 500mA	28 Watts	6.00 Metres	Galvanised Steel	
Y	3	STREET LIGHTING	ST IVES CRESCENT	GRIMSBY	524379.38	408218.32	2021	13/10/2021	68734	Urbis	Teceo 16 LED 500mA	25 Watts	6.00 Metres	Galvanised Steel	
Y	4	STREET LIGHTING	ST IVES CRESCENT	GRIMSBY	524384.34	408196.91	1994		57731	1 Urbis LED	Teceo 16 LED 500mA	28 Watts	6.00 Metres	Galvanised Steel	
Y	5	STREET LIGHTING	ST IVES CRESCENT	GRIMSBY	524354.47	408185.97	1994		57732	1 Urbis LED	Teceo 16 LED 500mA	28 Watts	6.00 Metres	Galvanised Steel	
Y	6	STREET LIGHTING	ST IVES CRESCENT	GRIMSBY	524340.04	408162.99	1994		57733	1 Urbis LED	Teceo 16 LED 500mA	28 Watts	6.00 Metres	Galvanised Steel	
Y	7	STREET LIGHTING	ST IVES CRESCENT	GRIMSBY	524333.08	408145.27	1994		57734	1 Urbis LED	Teceo 16 LED 500mA	28 Watts	6.00 Metres	Galvanised Steel	
Y	8	STREET LIGHTING	ST IVES CRESCENT	GRIMSBY	524343.33	408119.7	1994		57735	1 Urbis LED	Teceo 16 LED 500mA	28 Watts	6.00 Metres	Galvanised Steel	
Y	9	STREET LIGHTING	ST IVES CRESCENT	GRIMSBY	524312.45	408153.5	1994		57736	1 Urbis LED	Teceo 16 LED 500mA	28 Watts	6.00 Metres	Galvanised Steel	
Y	10	STREET LIGHTING	ST IVES CRESCENT	GRIMSBY	524292.07	408126.16	1994		57737	1 Urbis LED	Teceo 16 LED 500mA	28 Watts	6.00 Metres	Galvanised Steel	
Y	11	STREET LIGHTING	ST IVES CRESCENT	GRIMSBY	524262.96	408109.01	1994		57738	1 Urbis LED	Teceo 16 LED 500mA	28 Watts	6.00 Metres	Galvanised Steel	
Y	12	STREET LIGHTING	ST IVES CRESCENT	GRIMSBY	524230.3	408113.32	1994		57739	1 Urbis LED	Teceo 16 LED 500mA	28 Watts	6.00 Metres	Galvanised Steel	
Y	13	STREET LIGHTING	ST IVES CRESCENT	GRIMSBY	524198.66	408101.86	1994		57740	1 Urbis LED	Teceo 16 LED 500mA	28 Watts	6.00 Metres	Galvanised Steel	
Y	14	STREET LIGHTING	ST IVES CRESCENT	GRIMSBY	524183.47	408126.23	1994		57741	1 Urbis LED	Teceo 16 LED 500mA	28 Watts	6.00 Metres	Galvanised Steel	
Y	15	STREET LIGHTING	ST IVES CRESCENT	GRIMSBY	524188.53	408157.62	1994		57742	1 Urbis LED	Teceo 16 LED 500mA	28 Watts	6.00 Metres	Galvanised Steel	
Y	1	STREET LIGHTING	ST MICHAELS ROAD	GRIMSBY	524366.53	407887.07	1954		57833	1 Urbis LED	Teceo 40 LED 500mA	64 Watts	8.00 Metres	Steel	
Y	2	STREET LIGHTING	ST MICHAELS ROAD	GRIMSBY	524366.28	407908.59	1954		57834	1 Urbis LED	Teceo 40 LED 500mA	64 Watts	8.00 Metres	Steel	
Y	3	STREET LIGHTING	ST MICHAELS ROAD	GRIMSBY	524328.05	407887.33	1954		57835	1 Urbis LED	Teceo 40 LED 500mA	64 Watts	8.00 Metres	Steel	
Y	4	STREET LIGHTING	ST MICHAELS ROAD	GRIMSBY	524328.05	407908.72	1954		57836	1 Urbis LED	Teceo 40 LED 500mA	64 Watts	8.00 Metres	Steel	
Y	5	STREET LIGHTING	ST MICHAELS ROAD	GRIMSBY	524290.84	407887.2	1954		57837	1 Urbis LED	Teceo 40 LED 500mA	64 Watts	8.00 Metres	Steel	
Y	6	STREET LIGHTING	ST MICHAELS ROAD	GRIMSBY	524286.41	407908.72	1954		57838	1 Urbis LED	Teceo 40 LED 500mA	64 Watts	8.00 Metres	Steel	
Y	7	STREET LIGHTING	ST MICHAELS ROAD	GRIMSBY	524248.31	407887.52	1954		57839	1 Urbis LED	Teceo 40 LED 500mA	64 Watts	8.00 Metres	Steel	
Y	8	STREET LIGHTING	ST MICHAELS ROAD	GRIMSBY	524246.41	407908.72	1954		57840	1 Urbis LED	Teceo 40 LED 500mA	64 Watts	8.00 Metres	Steel	
Y	9	STREET LIGHTING	ST MICHAELS ROAD	GRIMSBY	524208.06	407887.65	1954		57841	1 Urbis LED	Teceo 40 LED 500mA	64 Watts	8.00 Metres	Steel	
Y	10	STREET LIGHTING	ST MICHAELS ROAD	GRIMSBY	524205.52	407908.98	1954		57842	1 Urbis LED	Teceo 40 LED 500mA	64 Watts	8.00 Metres	Steel	
Y	11	STREET LIGHTING	ST MICHAELS ROAD	GRIMSBY	524169.7	407887.78	1954		57843	1 Urbis LED	Teceo 40 LED 500mA	64 Watts	8.00 Metres	Steel	
Y	12	STREET LIGHTING	ST MICHAELS ROAD	GRIMSBY	524169.32	407908.79	1954		57844	1 Urbis LED	Teceo 40 LED 500mA	64 Watts	8.00 Metres	Steel	
Y	13	STREET LIGHTING	ST MICHAELS ROAD	GRIMSBY	524118.19	407904.36	1954		57845	1 Urbis LED	Teceo 40 LED 500mA	64 Watts	8.00 Metres	Steel	
Y	14	STREET LIGHTING	ST MICHAELS ROAD	GRIMSBY	524080.42	407892.27	2012		57846	1 Urbis LED	Teceo 40 LED 500mA	64 Watts	8.00 Metres	Steel	
Y	15	STREET LIGHTING	ST MICHAELS ROAD	GRIMSBY	524068.07	407868.81	2011		57847	1 Urbis LED	Axia 16 LED 500mA	28 Watts	6.00 Metres	Steel	
Y	16	STREET LIGHTING	ST MICHAELS ROAD	GRIMSBY	524045.56	407853.42	2011		57848	1 Urbis LED	Axia 16 LED 500mA	28 Watts	6.00 Metres	Steel	
Y	17	STREET LIGHTING	ST MICHAELS ROAD	GRIMSBY	524021.95	407868.81	2011		57849	1 Urbis LED	Teceo 40 LED 500mA	64 Watts	6.00 Metres	Steel	
Y	18	STREET LIGHTING	ST MICHAELS ROAD	GRIMSBY	524040.65	407904.51	1954		57850	1 Urbis LED	Teceo 40 LED 500mA	64 Watts	5.00 Metres	Steel	
Y	19	STREET LIGHTING	ST MICHAELS ROAD	GRIMSBY	524000.88	407892.53	2012		57851	1 Urbis LED	Teceo 40 LED 500mA	64 Watts	8.00 Metres	Steel	
Y	20	STREET LIGHTING	ST MICHAELS ROAD	GRIMSBY	523963.67	407904.93	2008		57852	1 Urbis LED	Teceo 40 LED 500mA	64 Watts	8.00 Metres	Steel	
Y	1	STREET LIGHTING	SELBOURNE ROAD	GRIMSBY	524222.51	407706.37	2011		52760	1 Urbis LED	Axia 16 LED 500mA	28 Watts	6.00 Metres	Steel	
Y	1	STREET LIGHTING	SHERWOOD ROAD	GRIMSBY	524439.3	408026.28	2001		57155	1 Urbis LED	Teceo 16 LED 500mA	28 Watts	6.00 Metres	Steel	
Y	2	STREET LIGHTING	SHERWOOD ROAD	GRIMSBY	524461.19	408017.23	2001		57156	1 Urbis LED	Teceo 16 LED 500mA	28 Watts	6.00 Metres	Steel	
Y	3	STREET LIGHTING	SHERWOOD ROAD	GRIMSBY	524500.27	408021.78	2001		57157	1 Urbis LED	Teceo 16 LED 500mA	28 Watts	6.00 Metres	Steel	
Y	4	STREET LIGHTING	SHERWOOD ROAD	GRIMSBY	524528.36	408019.29	2001		57158	1 Urbis LED	Teceo 16 LED 500mA	28 Watts	6.00 Metres	Steel	
Y	5	STREET LIGHTING	SHERWOOD ROAD	GRIMSBY	524561.42	408017.16	2001		57159	1 Urbis LED	Teceo 16 LED 500mA	28 Watts	6.00 Metres	Steel	
Y	6	STREET LIGHTING	SHERWOOD ROAD	GRIMSBY	524592.37	408014.82	2001		57160	1 Urbis LED	Teceo 16 LED 500mA	28 Watts	6.00 Metres	Steel	
Y	7	STREET LIGHTING	SHERWOOD ROAD	GRIMSBY	524620.41	408005.27	2001		57161	1 Urbis LED	Teceo 16 LED 500mA	28 Watts	6.00 Metres	Steel	
Y	8	STREET LIGHTING	SHERWOOD ROAD	GRIMSBY	524655.53	408011.86	2001		57162	1 Urbis LED	Teceo 16 LED 500mA	28 Watts	6.00 Metres	Steel	
Y	9	STREET LIGHTING	SHERWOOD ROAD	GRIMSBY	524684.77	408013.52	2001		57163	1 Urbis LED	Teceo 16 LED 500mA	28 Watts	6.00 Metres	Steel	
Y	10	STREET LIGHTING	SHERWOOD ROAD	GRIMSBY	524723	408018	2001		57164	1 Urbis LED	Teceo 16 LED 500mA	28 Watts	6.00 Metres	Steel	
Y	11	STREET LIGHTING	SHERWOOD ROAD	GRIMSBY	524751.41	408020.43	2001		57165	1 Urbis LED	Teceo 16 LED 500mA	28 Watts	6.00 Metres	Steel	
Y	12	STREET LIGHTING	SHERWOOD ROAD	GRIMSBY	524784.68	408016.47	2001		57166	1 Urbis LED	Teceo 16 LED 500mA	28 Watts	6.00 Metres	Steel	
Y	13	STREET LIGHTING	SHERWOOD ROAD	GRIMSBY	524820.03	408019.89	2001		57167	1 Urbis LED	Teceo 16 LED 500mA	28 Watts	6.00 Metres	Steel	
Y	14	STREET LIGHTING	SHERWOOD ROAD	GRIMSBY	524852.04	408031.33	2001		57168	1 Urbis LED	Teceo 16 LED 500mA	28 Watts	6.00 Metres	Steel	
Y	15	STREET LIGHTING	SHERWOOD ROAD	GRIMSBY	524884.4	408034.37	2001		57169	1 Urbis LED	Teceo 16 LED 500mA	28 Watts	6.00 Metres	Steel	
Y	16	STREET LIGHTING	SHERWOOD ROAD	GRIMSBY	524912.62	408029.76	2001		57170	1 Urbis LED	Teceo 16 LED 500mA	28 Watts	6.00 Metres	Steel	
Y	17	STREET LIGHTING	SHERWOOD ROAD	GRIMSBY	524948.26	408033.13	2001		57171	1 Urbis LED	Teceo 16 LED 500mA	28 Watts	6.00 Metres	Steel	
Y	18	STREET LIGHTING	SHERWOOD ROAD	GRIMSBY	524977.96	408043.5	2001		57172	Urbis	Axia 16 LED 500mA	28 Watts	6.00 Metres	Steel	
Y	1	STREET LIGHTING	STEPHEN CRESCENT	GRIMSBY	524472.46	407628.3	1999		58446	Urbis	Axia 16 LED 350mA	19 Watts	6.00 Metres	Steel	
Y	2	STREET LIGHTING	STEPHEN CRESCENT	GRIMSBY	524463.04	407594.21	2017	30/06/2017	58447	Urbis	Axia 16 LED 350mA	19 Watts	6.00 Metres	Galvanised Steel	
Y	3	STREET LIGHTING	STEPHEN CRESCENT	GRIMSBY	524504.73	407564.24	2017	30/06/2017	58448	Urbis	Axia 16 LED 350mA	19 Watts	6.00 Metres	Galvanised Steel	
Y	4	STREET LIGHTING	STEPHEN CRESCENT	GRIMSBY	524515.79	407530.14	2017	30/06/2017	66901	Urbis	Axia 16 LED 350mA	19 Watts	6.00 Metres	Galvanised Steel	
Y	5	STREET LIGHTING	STEPHEN CRESCENT	GRIMSBY	524516.72	407503.76	2017	30/06/2017	58449	Urbis	Axia 16 LED 350mA	19 Watts	6.00 Metres	Galvanised Steel	
Y	6	STREET LIGHTING	STEPHEN CRESCENT	GRIMSBY	524519.85	407471.53	2017	30/06/2017	58450	Urbis	Axia 16 LED 350mA	19 Watts	6.00 Metres	Galvanised Steel	
Y	7	STREET LIGHTING	STEPHEN CRESCENT	GRIMSBY	524482.95	407475.79	2017	30/06/2017	58451	Urbis	Axia 16 LED 350mA	19 Watts	6.00 Metres	Galvanised Steel	
Y	8	STREET LIGHTING	STEPHEN CRESCENT	GRIMSBY	524446.45	407471.06	2017	30/06/2017	58452	Urbis	Axia 16 LED 350mA	19 Watts	6.00 Metres	Galvanised Steel	
Y	9	STREET LIGHTING	STEPHEN CRESCENT	GRIMSBY	524439.86	407513.62	2017	30/06/2017	58453	Urbis	Axia 16 LED 350mA	19 Watts	6.00 Metres	Galvanised Steel	
Y	10	STREET LIGHTING	STEPHEN CRESCENT	GRIMSBY	524440.66	407556.58	2017	30/06/2017	58454	Urbis	Axia 16 LED 350mA	19 Watts	6.00 Metres	Galvanised Steel	
Y	11	STREET LIGHTING	STEPHEN CRESCENT	GRIMSBY	524470.31	407555.11	2017	30/06/2017	58455	Urbis	Axia 16 LED 350mA	19 Watts	6.00 Metres	Galvanised Steel	
Y	1	STREET LIGHTING	TATTERSHALL AVENUE	GRIMSBY	524771.01	407679.62	2002		58753	Urbis	Axia 16 LED 350mA	19 Watts	5.00 Metres	Steel	
Y	2	STREET LIGHTING	TATTERSHALL AVENUE	GRIMSBY	524799.35	407670.28	2002		58754	Urbis	Axia 16 LED 350mA	19 Watts	5.00 Metres	Steel	
Y	3	STREET LIGHTING	TATTERSHALL AVENUE	GRIMSBY				02/06/2025	70225	Urbis	Axia 16 LED 350mA	19 Watts	6.00 Metres	Galvanised Steel	
Y	1	STREET LIGHTING	THORNTON GROVE	GRIMSBY	524086	407700	2009		59156	Urbis	Axia 16 LED 350mA	19 Watts	6.00 Metres	Steel	
Y	2	STREET LIGHTING	THORNTON GROVE	GRIMSBY	524097	407720	2009		59157	Urbis	Axia 16 LED 350mA	19 Watts	6.00 Metres	Steel	
Y	3	STREET LIGHTING	THORNTON GROVE	GRIMSBY	524084	407739	2009		59158	Urbis	Axia 16 LED 350mA	19 Watts	6.00 Metres	Steel	
Y	1	STREET LIGHTING	WELBECK PLACE	GRIMSBY	524486.02	407927.38	2002		60083	Urbis	Axia 16 LED 350mA	19 Watts	5.00 Metres	Stainless Steel	
Y	2	STREET LIGHTING	WELBECK PLACE	GRIMSBY	524492.94	407951.85	2002		60084	Urbis	Axia 16 LED 350mA	19 Watts	5.00 Metres	Stainless Steel	
Y	3	STREET LIGHTING	WELBECK PLACE	GRIMSBY	524502.99	407972.4	2002		60085	Urbis	Axia 16 LED 350mA	19 Watts	5.00 Metres	Stainless Steel	
Y	1	STREET LIGHTING	WELBECK ROAD	GRIMSBY	524412.16	407939.39	1996		60089	Urbis	Axia 16 LED 350mA	19 Watts	6.00 Metres	Galvanised Steel	
Y	2	STREET LIGHTING	WELBECK ROAD	GRIMSBY	524444.31	407930.15	1996		60090	Urbis	Axia 16 LED 350mA	19 Watts	6.00 Metres	Galvanised Steel	
Y	3	STREET LIGHTING	WELBECK ROAD	GRIMSBY	524470.76	407913.38	1996		60091	Urbis	Axia 16 LED 350mA	19 Watts	6.00 Metres	Galvanised Steel	
Y	4	STREET LIGHTING	WELBECK ROAD	GRIMSBY	524500	407913.95	1996		60092	Urbis	Axia 16 LED 350mA	19 Watts	6.00 Metres	Galvanised Steel	
Y	5	STREET LIGHTING	WELBECK ROAD	GRIMSBY	524528.23	407896.29	1996		60093	Urbis	Axia 16 LED 350mA	19 Watts	6.00 Metres	Galvanised Steel	
Y	6	STREET LIGHTING	WELBECK ROAD	GRIMSBY	524557.09	407887.88	1996		60094	Urbis	Axia 16 LED 350mA	19 Watts	6.00 Metres	Galvanised Steel	
Y	1	STREET LIGHTING	WELLAND AVENUE	GRIMSBY	524745.21	407770.88	2001		60175	Urbis	Axia 16 LED 350mA	19 Watts	6.00 Metres	Steel	
Y	2	STREET LIGHTING	WELLAND AVENUE	GRIMSBY	524720.23	407777.07	2001		60176	Urbis	Axia 16 LED 350mA	19 Watts	6.00 Metres	Steel	
Y	3	STREET LIGHTING	WELLAND AVENUE	GRIMSBY	524693.69	407784.01	2001		60177	Urbis	Axia 16 LED 350mA	19 Watts	6.00 Metres	Steel	
Y	4	STREET LIGHTING	WELLAND AVENUE	GRIMSBY	524668.25	407791.44	2001		60178	Urbis	Axia 16 LED 350mA	19 Watts	6.00 Metres	Steel	
Y	5	STREET LIGHTING	WELLAND AVENUE	GRIMSBY	524645.1	407800.16	2001		60179	Urbis	Axia 16 LED 350mA	19 Watts	6.00 Metres	Steel	
Y	6	STREET LIGHTING	WELLAND AVENUE	GRIMSBY	524626.2	407801.26	2001		60180	Urbis	Axia 8 LED 350mA	10 Watts	5.00 Metres	Galvanised Steel	
Y	7	STREET LIGHTING	WELLAND AVENUE	GRIMSBY	524629.07	407826.13	2001		60181	Urbis	Axia 16 LED 350mA	19 Watts	6.00 Metres	Steel	
Y	8	STREET LIGHTING	WELLAND AVENUE	GRIMSBY	524634.01	407857.02	2001		60182	Urbis	Axia 16 LED 350mA	19 Watts	6.00 Metres	Steel	
Y	9	STREET LIGHTING	WELLAND AVENUE	GRIMSBY	524648.68	407876.92	2001		60183	Urbis	Axia 16 LED 350mA	19 Watts	6.00 Metres	Steel	
Y	10	STREET LIGHTING	WELLAND AVENUE	GRIMSBY	524654.79	407908.83	2001		60184	Urbis	Axia 16 LED 350mA	19 Watts	6.00 Metres	Steel	
Y	11	STREET LIGHTING	WELLAND AVENUE	GRIMSBY	524670.61	407923.6	2001		60185	Urbis	Axia 8 LED 350mA	10 Watts	5.00 Metres	Galvanised Steel	
Y	12	STREET LIGHTING	WELLAND AVENUE	GRIMSBY	524692.8	407931.13	2001		60186	Urbis	Axia 8 LED 350mA	10 Watts	5.00 Metres	Galvanised Steel	
Y	13	STREET LIGHTING	WELLAND AVENUE	GRIMSBY	524673.28	407945.57	2001		60187	Urbis	Axia 8 LED 350mA	10 Watts	5.00 Metres	Galvanised Steel	
Y	14	STREET LIGHTING	WELLAND AVENUE	GRIMSBY	524650.28	407936.88	2001		60188	Urbis	Axia 16 LED 350mA	19 Watts	6.00 Metres	Steel	
Y	15	STREET LIGHTING	WELLAND AVENUE	GRIMSBY	524661.32	407964.22	2001		60189	Urbis	Axia 16 LED 350mA	19 Watts	6.00 Metres	Steel	
Y	16	STREET LIGHTING	WELLAND AVENUE	GRIMSBY	524654.67	407994.35	2001		60190	Urbis	Axia 16 LED 350mA	19 Watts	6.00 Metres	Steel	

Y	1	STREET LIGHTING	WILLOUGHBY GROVE	GRIMSBY	524657.22	407867.46	2001		60737	Urbis	Axia 16 LED 350mA	19 Watts	5.00 Metres	Steel	
Y	2	STREET LIGHTING	WILLOUGHBY GROVE	GRIMSBY	524682.78	407851.2	1999		60738	Urbis	Axia 16 LED 350mA	19 Watts	6.00 Metres	Steel	
Y	3	STREET LIGHTING	WILLOUGHBY GROVE	GRIMSBY	524701.26	407881.14	1999		60739	Urbis	Axia 16 LED 350mA	19 Watts	6.00 Metres	Steel	
Y	4	STREET LIGHTING	WILLOUGHBY GROVE	GRIMSBY	524711.77	407850.57	1999		60740	Urbis	Axia 16 LED 350mA	19 Watts	6.00 Metres	Steel	
Y	1	STREET LIGHTING	WINCHCOMBE AVENUE	GRIMSBY	524133	407800	2009		60799	1 Urbis LED	Axia 16 LED 500mA	28 Watts	6.00 Metres	Steel	
Y	2	STREET LIGHTING	WINCHCOMBE AVENUE	GRIMSBY	524100.95	407797.91	2009		60800	1 Urbis LED	Axia 16 LED 500mA	28 Watts	6.00 Metres	Steel	
Y	3	STREET LIGHTING	WINCHCOMBE AVENUE	GRIMSBY	524069	407804	2009		60801	1 Urbis LED	Axia 16 LED 500mA	28 Watts	6.00 Metres	Steel	
Y	4	STREET LIGHTING	WINCHCOMBE AVENUE	GRIMSBY	524037	407786	2009		60802	1 Urbis LED	Axia 16 LED 500mA	28 Watts	6.00 Metres	Steel	
Y	5	STREET LIGHTING	WINCHCOMBE AVENUE	GRIMSBY	524001	407786	2009		60803	1 Urbis LED	Axia 16 LED 500mA	28 Watts	6.00 Metres	Steel	
Y	1	STREET LIGHTING	WROXHAM AVENUE	GRIMSBY	524310.98	407917.79	2008		61291	1 Urbis LED	Axia 16 LED 500mA	28 Watts	6.00 Metres	Steel	
Y	2	STREET LIGHTING	WROXHAM AVENUE	GRIMSBY	524327.94	407943.38	2008		61292	1 Urbis LED	Axia 16 LED 500mA	28 Watts	6.00 Metres	Steel	
Y	3	STREET LIGHTING	WROXHAM AVENUE	GRIMSBY	524334.08	407969.51	2008		61293	1 Urbis LED	Axia 16 LED 500mA	28 Watts	6.00 Metres	Steel	
Y	4	STREET LIGHTING	WROXHAM AVENUE	GRIMSBY	524331.26	408002.77	2008		61294	1 Urbis LED	Axia 16 LED 500mA	28 Watts	6.00 Metres	Steel	
Y	5	STREET LIGHTING	WROXHAM AVENUE	GRIMSBY	524331.32	408024.41	2008		61295	1 Urbis LED	Axia 16 LED 500mA	28 Watts	6.00 Metres	Steel	
Y	6	STREET LIGHTING	WROXHAM AVENUE	GRIMSBY	524311.74	408042.9	2008		61296	1 Urbis LED	Axia 16 LED 500mA	28 Watts	6.00 Metres	Steel	
Y	7	STREET LIGHTING	WROXHAM AVENUE	GRIMSBY	524283.21	408041.12	2008		61297	1 Urbis LED	Axia 16 LED 500mA	28 Watts	6.00 Metres	Steel	
Y	8	STREET LIGHTING	WROXHAM AVENUE	GRIMSBY	524252.11	408028.42	2008		61298	Urbis	Axia 16 LED 350mA	19 Watts	6.00 Metres	Steel	
Y	9	STREET LIGHTING	WROXHAM AVENUE	GRIMSBY	524216.6	408037.05	2008		61299	1 Urbis LED	Axia 16 LED 500mA	28 Watts	6.00 Metres	Steel	
Y	10	STREET LIGHTING	WROXHAM AVENUE	GRIMSBY	524185.68	408024.41	2008		61300	1 Urbis LED	Axia 16 LED 500mA	28 Watts	6.00 Metres	Steel	
Y	11	STREET LIGHTING	WROXHAM AVENUE	GRIMSBY	524151.79	408032.94	2008		61301	1 Urbis LED	Axia 16 LED 500mA	28 Watts	6.00 Metres	Steel	
Y	1	STREET LIGHTING	THE CROSSWAY	GRIMSBY	524007.5	407534.56	2000		58973	Urbis	Axia 16 LED 350mA	19 Watts	6.00 Metres	Galvanised Steel	
Y	2	STREET LIGHTING	THE CROSSWAY	GRIMSBY	524007.75	407504.31	2015	30/07/2015	58974	Urbis	Axia 16 LED 350mA	19 Watts	6.00 Metres	Galvanised Steel	
Y	1	STREET LIGHTING	HILL TOP PLACE	GRIMSBY	523651.71	407489.16	2017	30/06/2017	50859	1 Urbis LED	Axia 16 LED 500mA	28 Watts	6.00 Metres	Galvanised Steel	
Y	2	STREET LIGHTING	HILL TOP PLACE	GRIMSBY	523655.83	407460.05	2013		66832	1 Urbis LED	Axia 16 LED 500mA	28 Watts	6.00 Metres	Steel	
Y	3	STREET LIGHTING	HILL TOP PLACE	GRIMSBY	523655.83	407426.55	2017	30/06/2017	66831	1 Urbis LED	Axia 16 LED 500mA	28 Watts	6.00 Metres	Galvanised Steel	
Y	1	STREET LIGHTING	BARDNEY GARDENS	GRIMSBY	524772.4	407951.7	1997		43624	1 Urbis LED	Axia 16 LED 500mA	28 Watts	5.00 Metres	Galvanised Steel	
Y	2	STREET LIGHTING	BARDNEY GARDENS	GRIMSBY	524804.3	407945.38	1997		43625	1 Urbis LED	Axia 16 LED 500mA	28 Watts	5.00 Metres	Galvanised Steel	
Y	3	STREET LIGHTING	BARDNEY GARDENS	GRIMSBY	524802.52	407955.88	1997		43626	1 Urbis LED	Axia 16 LED 500mA	28 Watts	5.00 Metres	Galvanised Steel	
Y	4	STREET LIGHTING	BARDNEY GARDENS	GRIMSBY	524800.37	407979.49	1997		43627	1 Urbis LED	Axia 16 LED 500mA	28 Watts	5.00 Metres	Galvanised Steel	
Y	1	STREET LIGHTING	GOXHILL GARDENS	GRIMSBY	524779.36	407896.64	1989		49386	1 Urbis LED	Axia 16 LED 500mA	28 Watts	5.00 Metres	Galvanised Steel	
Y	2	STREET LIGHTING	GOXHILL GARDENS	GRIMSBY	524809.74	407885.63	1989		49387	1 Urbis LED	Axia 16 LED 500mA	28 Watts	5.00 Metres	Galvanised Steel	
Y	3	STREET LIGHTING	GOXHILL GARDENS	GRIMSBY	524799.36	407895.25	1989		49388	1 Urbis LED	Axia 16 LED 500mA	28 Watts	5.00 Metres	Galvanised Steel	
Y	4	STREET LIGHTING	GOXHILL GARDENS	GRIMSBY	524800.12	407920.12	1989		49389	1 Urbis LED	Axia 16 LED 500mA	28 Watts	5.00 Metres	Galvanised Steel	
Y	1	STREET LIGHTING	GREAT COATES ROAD	GRIMSBY	524585.56	408879.68	1994		49581	1 Urbis LED	Teceo 48 LED 700mA	104 Watts	12.00 Metres	Galvanised Steel	
Y	2	STREET LIGHTING	GREAT COATES ROAD	GRIMSBY	524562.12	408865.34	1999		49582	1 Urbis LED	Teceo 48 LED 700mA	104 Watts	12.00 Metres	Galvanised Steel	
Y	3	STREET LIGHTING	GREAT COATES ROAD	GRIMSBY	524525.79	408884.9	1999		49583	1 Urbis LED	Teceo 48 LED 700mA	104 Watts	10.00 Metres	Galvanised Steel	
Y	4	STREET LIGHTING	GREAT COATES ROAD	GRIMSBY	524488.07	408877.45	1999		49584	1 Urbis LED	Teceo 48 LED 700mA	104 Watts	10.00 Metres	Galvanised Steel	
Y	5	STREET LIGHTING	GREAT COATES ROAD	GRIMSBY	524463.03	408897.06	1999		49585	1 Urbis LED	Teceo 48 LED 700mA	104 Watts	10.00 Metres	Galvanised Steel	
Y	6	STREET LIGHTING	GREAT COATES ROAD	GRIMSBY	524433.2	408902.49	1999		49586	1 Urbis LED	Teceo 48 LED 700mA	104 Watts	10.00 Metres	Galvanised Steel	
Y	7	STREET LIGHTING	GREAT COATES ROAD	GRIMSBY	524396.75	408903.14	1999		49587	1 Urbis LED	Teceo 48 LED 700mA	104 Watts	10.00 Metres	Galvanised Steel	
Y	8	STREET LIGHTING	GREAT COATES ROAD	GRIMSBY	524370.05	408887.95	1999		49588	1 Urbis LED	Teceo 48 LED 700mA	104 Watts	10.00 Metres	Galvanised Steel	
Y	9	STREET LIGHTING	GREAT COATES ROAD	GRIMSBY	524340.78	408902.22	1999		49589	1 Urbis LED	Teceo 48 LED 700mA	104 Watts	10.00 Metres	Galvanised Steel	
Y	10	STREET LIGHTING	GREAT COATES ROAD	GRIMSBY	524310.21	408902.49	1999		49590	1 Urbis LED	Teceo 48 LED 700mA	104 Watts	10.00 Metres	Galvanised Steel	
Y	11	STREET LIGHTING	GREAT COATES ROAD	GRIMSBY	524280.2	408887.49	1999		49591	1 Urbis LED	Teceo 48 LED 700mA	104 Watts	10.00 Metres	Galvanised Steel	
Y	12	STREET LIGHTING	GREAT COATES ROAD	GRIMSBY	524246.14	408886.85	1999		49592	1 Urbis LED	Teceo 48 LED 700mA	104 Watts	10.00 Metres	Galvanised Steel	
Y	13	STREET LIGHTING	GREAT COATES ROAD	GRIMSBY	524214.47	408891.54	1999		49593	1 Urbis LED	Teceo 48 LED 700mA	104 Watts	10.00 Metres	Galvanised Steel	
Y	14	STREET LIGHTING	GREAT COATES ROAD	GRIMSBY	524189.43	408898.81	1999		49594	1 Urbis LED	Teceo 48 LED 700mA	104 Watts	10.00 Metres	Galvanised Steel	
Y	15	STREET LIGHTING	GREAT COATES ROAD	GRIMSBY	524169.55	408910.51	1999		49595	1 Urbis LED	Teceo 48 LED 700mA	104 Watts	10.00 Metres	Galvanised Steel	
Y	16	STREET LIGHTING	GREAT COATES ROAD	GRIMSBY	524147.29	408932.44	1999		49596	1 Urbis LED	Teceo 48 LED 700mA	104 Watts	10.00 Metres	Galvanised Steel	
Y	17	STREET LIGHTING	GREAT COATES ROAD	GRIMSBY	524128.51	408952.67	2024	08/02/2024	69840	Urbis	Teceo 48 LED 700mA	104 Watts	12.00 Metres	Galvanised Steel	
Y	18	STREET LIGHTING	GREAT COATES ROAD	GRIMSBY	524107.8	408973.33	1999		49598	1 Urbis LED	Teceo 48 LED 700mA	104 Watts	10.00 Metres	Galvanised Steel	
Y	19	STREET LIGHTING	GREAT COATES ROAD	GRIMSBY	524098.94	409002.06	1999		49599	1 Urbis LED	Teceo 48 LED 700mA	104 Watts	10.00 Metres	Galvanised Steel	
Y	20	STREET LIGHTING	GREAT COATES ROAD	GRIMSBY	524069.29	409020.5			69023						
Y	21	STREET LIGHTING	GREAT COATES ROAD	GRIMSBY	524049.62	409055.67	2006		49601	1 Urbis LED	Teceo 48 LED 700mA	104 Watts	12.00 Metres	Stainless Steel	
Y	22	STREET LIGHTING	GREAT COATES ROAD	GRIMSBY	524011.21	409076.65	1999		49602	1 Urbis LED	Teceo 48 LED 700mA	104 Watts	10.00 Metres	Galvanised Steel	
Y	23	STREET LIGHTING	GREAT COATES ROAD	GRIMSBY	524000.53	409105.56	1999		49603	1 Urbis LED	Teceo 48 LED 700mA	104 Watts	10.00 Metres	Galvanised Steel	
Y	24	STREET LIGHTING	GREAT COATES ROAD	GRIMSBY	523984.88	409121.3	1994		49604	1 Urbis LED	Teceo 48 LED 700mA	104 Watts	10.00 Metres	Galvanised Steel	
Y	25	STREET LIGHTING	GREAT COATES ROAD	GRIMSBY	523960.94	409145.88	1999		49605	1 Urbis LED	Teceo 48 LED 700mA	104 Watts	10.00 Metres	Galvanised Steel	
Y	26	STREET LIGHTING	GREAT COATES ROAD	GRIMSBY	523934.43	409168.06	1994		49606	1 Urbis LED	Teceo 48 LED 700mA	104 Watts	6.00 Metres	Galvanised Steel	
Y	27	STREET LIGHTING	GREAT COATES ROAD	GRIMSBY	523916.39	409184.91	1994		49607	1 Urbis LED	Teceo 48 LED 700mA	104 Watts	10.00 Metres	Galvanised Steel	
Y	28	STREET LIGHTING	GREAT COATES ROAD	GRIMSBY	523896.69	409202.49	1994		49608	1 Urbis LED	Teceo 48 LED 700mA	104 Watts	10.00 Metres	Galvanised Steel	
Y	29	STREET LIGHTING	GREAT COATES ROAD	GRIMSBY	523873.12	409225.6	1994		49609	1 Urbis LED	Teceo 48 LED 700mA	104 Watts	10.00 Metres	Galvanised Steel	
Y	30	STREET LIGHTING	GREAT COATES ROAD	GRIMSBY	523847.35	409251.65	1994		49610	1 Urbis LED	Teceo 48 LED 700mA	104 Watts	10.00 Metres	Galvanised Steel	
Y	31	STREET LIGHTING	GREAT COATES ROAD	GRIMSBY	523824.81	409277.86	1994		49611	1 Urbis LED	Teceo 48 LED 700mA	104 Watts	10.00 Metres	Galvanised Steel	
Y	32	STREET LIGHTING	GREAT COATES ROAD	GRIMSBY	523790.93	409298.21	1994		49612	1 Urbis LED	Teceo 48 LED 700mA	104 Watts	10.00 Metres	Galvanised Steel	
Y	33	STREET LIGHTING	GREAT COATES ROAD	GRIMSBY	523801.24	409306.13	1994		49613	1 Urbis LED	Teceo 48 LED 700mA	104 Watts	10.00 Metres	Galvanised Steel	
Y	34	STREET LIGHTING	GREAT COATES ROAD	GRIMSBY	523760.92	409331.26	1994		49614	1 Urbis LED	Teceo 48 LED 700mA	104 Watts	10.00 Metres	Galvanised Steel	
Y	35	STREET LIGHTING	GREAT COATES ROAD	GRIMSBY	523773.81	409341.38	1994		49615	1 Urbis LED	Teceo 48 LED 700mA	104 Watts	10.00 Metres	Galvanised Steel	
Y	36	STREET LIGHTING	GREAT COATES ROAD	GRIMSBY	523734.96	409359.15	1994		49616	1 Urbis LED	Teceo 48 LED 700mA	104 Watts	10.00 Metres	Galvanised Steel	
Y	37	STREET LIGHTING	GREAT COATES ROAD	GRIMSBY	523747.66	409370.02	1994		49617	1 Urbis LED	Teceo 48 LED 700mA	104 Watts	10.00 Metres	Galvanised Steel	
Y	38	STREET LIGHTING	GREAT COATES ROAD	GRIMSBY	523710.65	409387.14	1994		49618	1 Urbis LED	Teceo 48 LED 700mA	104 Watts	10.00 Metres	Galvanised Steel	
Y	39	STREET LIGHTING	GREAT COATES ROAD	GRIMSBY	523726.12	409396.34	1994		49619	1 Urbis LED	Teceo 48 LED 700mA	104 Watts	10.00 Metres	Galvanised Steel	
Y	40	STREET LIGHTING	GREAT COATES ROAD	GRIMSBY	523691.87	409412.46	1994		49620	1 Urbis LED	Teceo 48 LED 700mA	104 Watts	10.00 Metres	Galvanised Steel	
Y	41	STREET LIGHTING	GREAT COATES ROAD	GRIMSBY	523704.76	409422.21	1994		49621	1 Urbis LED	Teceo 48 LED 700mA	104 Watts	10.00 Metres	Galvanised Steel	
Y	42	STREET LIGHTING	GREAT COATES ROAD	GRIMSBY	523669.04	409445.32	1994		49622	1 Urbis LED	Teceo 48 LED 700mA	104 Watts	10.00 Metres	Galvanised Steel	
Y	43	STREET LIGHTING	GREAT COATES ROAD	GRIMSBY	523679.91	409452.13	1994		49623	1 Urbis LED	Teceo 48 LED 700mA	104 Watts	10.00 Metres	Galvanised Steel	
Y	44	STREET LIGHTING	GREAT COATES ROAD	GRIMSBY	523656.71	409479.66	1994		49624	1 Urbis LED	Teceo 48 LED 700mA	104 Watts	10.00 Metres	Galvanised Steel	
Y	45	STREET LIGHTING	GREAT COATES ROAD	GRIMSBY	523633.51	409507	1994		49625	1 Urbis LED	Teceo 48 LED 700mA	104 Watts	10.00 Metres	Galvanised Steel	
Y	46	STREET LIGHTING	GREAT COATES ROAD	GRIMSBY	523610.49	409534.9	2009		49626	1 Urbis LED	Teceo 48 LED 700mA	104 Watts	10.00 Metres	Steel	
Y	47	STREET LIGHTING	GREAT COATES ROAD	GRIMSBY	523587.85	409562.61	1994		49627	1 Urbis LED	Teceo 48 LED 700mA	104 Watts	10.00 Metres	Galvanised Steel	
Y	48	STREET LIGHTING	GREAT COATES ROAD	GRIMSBY	523565.2	409590.32	1994		49628	1 Urbis LED	Teceo 48 LED 700mA	104 Watts	10.00 Metres	Galvanised Steel	
Y	49	STREET LIGHTING	GREAT COATES ROAD	GRIMSBY	523542.74	409618.03	1994		49629	1 Urbis LED	Teceo 48 LED 700mA	104 Watts	10.00 Metres	Galvanised Steel	
Y	50	STREET LIGHTING	GREAT COATES ROAD	GRIMSBY	523530.76	409637.49	2006		49630	1 Urbis LED	Teceo 48 LED 700mA	104 Watts	10.00 Metres	Stainless Steel	
Y	51	STREET LIGHTING	GREAT COATES ROAD	GRIMSBY	523508.92	409644.42	2006		49631	1 Urbis LED	Teceo 48 LED 700mA	104 Watts	10.00 Metres	Stainless Steel	
Y	52	STREET LIGHTING	GREAT COATES ROAD	GRIMSBY	523497.91	409675.21	2009		49632	1 Urbis LED	Teceo 48 LED 700mA	104 Watts	10.00 Metres	Steel	
Y	53	STREET LIGHTING	GREAT COATES ROAD	GRIMSBY	523474.41	409702.27	2007		49633	1 Urbis LED	Teceo 48 LED 700mA	104 Watts	10.00 Metres	Galvanised Steel	
Y	54	STREET LIGHTING	GREAT COATES ROAD	GRIMSBY	523450.66	409729.48	1994		49634	1 Urbis LED	Teceo 48 LED 700mA	104 Watts	10.00 Metres	Galvanised Steel	
Y	55	STREET LIGHTING	GREAT COATES ROAD	GRIMSBY	523417.71	409745.93	2004		49635	1 Urbis LED	Teceo 48 LED 700mA	104 Watts	10.00 Metres	Stainless Steel	
Y	56	STREET LIGHTING	GREAT COATES ROAD	GRIMSBY	523395.86	409787.3	2006		49636	1 Urbis LED	Teceo 48 LED 700mA	104 Watts	10.00 Metres	Stainless Steel	
Y	57	STREET LIGHTING	GREAT COATES ROAD	GRIMSBY	523364.58	409801.34	2000		49637	1 Urbis LED	Teceo 48 LED 700mA	104 Watts	10.00 Metres	Galvanised Steel	
Y	58	STREET LIGHTING	GREAT COATES ROAD	GRIMSBY	523342.37	409820.82	2006		49638	1 Urbis LED	Teceo 48 LED 700mA	104 Watts	10.00 Metres	Stainless Steel	
Y	59	STREET LIGHTING	GREAT COATES ROAD	GRIMSBY	523324.82	409839.2	2006		49639	1 Urbis LED	Teceo 48 LED 700mA	104 Watts	12.00 Metres	Stainless Steel	
Y	60	STREET LIGHTING	GREAT COATES ROAD	GRIMSBY	523318.82	409859.12	2006		49640	1 Urbis LED	Teceo 48 LED 700mA	104 Watts	10.00 Metres	Stainless Steel	
Y	61	STREET LIGHTING	GREAT COATES ROAD	GRIMSBY	523284.35	409883.2	2006		49641	1 Urbis LED	Teceo 48 LED 700mA	104 Watts	10.00 Metres	Stainless Steel	
Y	62	STREET LIGHTING	GREAT COATES ROAD	GRIMSBY	523264.79	409880.79	2006		49642	1 Urbis LED	Teceo 48 LED 700mA	104 Watts	10.00 Metres	Stainless Steel	
Y	63	STREET LIGHTING	GREAT COATES ROAD	GRIMSBY	523242.27	409896.91	2019	15/01/2019	49643	Urbis	Ampera 48 LED 700mA	104 Watts	12.00 Metres	Galvanised Steel	
Y	64	STREET LIGHTING	GREAT COATES ROAD	GRIMSBY	523220.96	409922.31	1985		49654	1 Urbis LED	Teceo 48 LED 700mA	104 Watts	10.00 Metres	Galvanised Steel	
Y	65	STREET LIGHTING	GREAT COATES ROAD	GRIMSBY	523189.41	409936.65	1994		49644	1 Urbis LED	Teceo 48 LED 700mA	104 Watts	10.00 Metres	Galvanised Steel	
Y	66	STREET LIGHTING	GREAT COATES ROAD	GRIMSBY	523160.69	409949.45	1985		49645	1 Urbis LED	Teceo 48 LED 700mA	104 Watts	10.00 Metres	Galvanised Steel	
Y	67	STREET LIGHTING	GREAT COATES ROAD	GRIMSBY	523133.07	409961.69	1985		49646	1 Urbis LED	Teceo 48 LED 700mA	104 Watts	10.00 Metres	Galvanised Steel	
Y	68	STREET LIGHTING	GREAT COATES ROAD	GRIMSBY	523105.27	409970.25	1985		49647	1 Urbis LED	Teceo 48 LED 700mA	104 Watts	10.00 Metres	Galvanised Steel	
Y	69	STREET LIGHTING	GREAT COATES ROAD	GRIMSBY	523071.76	409977.34	1985		49648	1 Urbis LED	Teceo 48 LED 700mA	104 Watts	10.00 Metres	Galvanised Steel	
Y	70	STREET LIGHTING	GREAT COATES ROAD	GRIMSBY	523039.17	409983.88	1985		49649	1 Urbis LED	Teceo 48 LED 700mA	104 Watts	10.00 Metres	Galvanised Steel	
Y	71	STREET LIGHTING	GREAT COATES ROAD	GRIMSBY	523000.69	409980.01	1985		49650	1 Urbis LED	Teceo 48 LED 700mA	104 Watts	10.00 Metres	Galvanised Steel	
Y	72	STREET LIGHTING	GREAT COATES ROAD	GRIMSBY	522966.63	409983.24	1985		49651	1 Urbis LED	Teceo 48 LED 700mA	104 Watts	10.00 Metres	Galvanised Steel	
Y	73	STREET LIGHTING	GREAT COATES ROAD	GRIMSBY	522935.15	409984.07	1985		49652	1 Urbis LED	Teceo 48 LED 700mA	104 Watts	10.00 Metres	Galvanised Steel	
Y	74	STREET LIGHTING	GREAT COATES ROAD	GRIMSBY	522936.43	409998.06	1985		49653	1 Urbis LED	Teceo 48 LED 700mA	104 Watts	10.00 Metres	Galvanised Steel	
Y	1	STREET LIGHTING	BARRY AVENUE	GRIMSBY	524791.56	407558.14	2015		43774	1 Urbis LED	Axia 16 LED 500mA	28 Watts	6.00 Metres	Galvanised Steel	
Y	2	STREET LIGHTING	BARRY AVENUE	GRIMSBY	524784.91	407514.97	2017	30/09/2017	43775	1 Urbis LED	Axia 16 LED 500mA	28 Watts	6.00 Metres	Galvanised Steel	
Y	3	STREET LIGHTING	BARRY AVENUE	GRIMSBY	524701.15	407480.94	2017	30/09/2017	43776	1 Urbis LED	Axia 16 LED 500mA	28 Watts	6.00 Metres	Galvanised Steel	

Y	4	STREET LIGHTING	BARRY AVENUE	GRIMSBY	524747.15	407484.55	2017	30/09/2017	43777	1 Urbis LED	Axia 16 LED 500mA	28 Watts	6.00 Metres	Galvanised Steel	
Y	5	STREET LIGHTING	BARRY AVENUE	GRIMSBY	524793	407477	2017	30/09/2017	43778	1 Urbis LED	Axia 16 LED 500mA	28 Watts	6.00 Metres	Galvanised Steel	
Y	6	STREET LIGHTING	BARRY AVENUE	GRIMSBY	524831.74	407487.52	2017	30/09/2017	43779	1 Urbis LED	Axia 16 LED 500mA	28 Watts	6.00 Metres	Galvanised Steel	
Y	7	STREET LIGHTING	BARRY AVENUE	GRIMSBY	524872.73	407481.68	2017	30/09/2017	43780	1 Urbis LED	Axia 16 LED 500mA	28 Watts	6.00 Metres	Galvanised Steel	
Y	8	STREET LIGHTING	BARRY AVENUE	GRIMSBY	524918.52	407492.38	2017	30/09/2017	43781	1 Urbis LED	Axia 16 LED 500mA	28 Watts	6.00 Metres	Galvanised Steel	
Y	9	STREET LIGHTING	BARRY AVENUE	GRIMSBY	524956.29	407486.41	2017	30/09/2017	43782	1 Urbis LED	Axia 16 LED 500mA	28 Watts	6.00 Metres	Galvanised Steel	
Y	1	STREET LIGHTING	CAMBRIDGE ROAD	GRIMSBY				23/01/2025	70178	Urbis	Teceo 48 LED 700mA	104 Watts	12.00 Metres	Galvanised Steel	
Y	2	STREET LIGHTING	CAMBRIDGE ROAD	GRIMSBY	525410.92	408379.06		08/07/2024	70138	1 Urbis LED	Teceo 48 LED 700mA	104 Watts	8.00 Metres	Galvanised Steel	
Y	3	STREET LIGHTING	CAMBRIDGE ROAD	GRIMSBY	525370.44	408392.63		08/07/2024	70139	1 Urbis LED	Teceo 48 LED 700mA	104 Watts	8.00 Metres	Galvanised Steel	
Y	4	STREET LIGHTING	CAMBRIDGE ROAD	GRIMSBY	525368.93	408367.9	2001		45135	Urbis	Axia 8 LED 350mA	10 Watts	6.00 Metres	Steel	
Y	5	STREET LIGHTING	CAMBRIDGE ROAD	GRIMSBY	525361.03	408350.27	2001		45136	Urbis	Axia 8 LED 350mA	10 Watts	6.00 Metres	Galvanised Steel	
Y	6	STREET LIGHTING	CAMBRIDGE ROAD	GRIMSBY	525353.59	408372.12	2001		45137	Urbis	Axia 8 LED 350mA	10 Watts	6.00 Metres	Steel	
Y	7	STREET LIGHTING	CAMBRIDGE ROAD	GRIMSBY	525328.44	408379.04		08/07/2024	70140	1 Urbis LED	Teceo 48 LED 700mA	104 Watts	8.00 Metres	Galvanised Steel	
Y	8	STREET LIGHTING	CAMBRIDGE ROAD	GRIMSBY	525289.66	408394.32		08/07/2024	70141	1 Urbis LED	Teceo 48 LED 700mA	104 Watts	8.00 Metres	Galvanised Steel	
Y	9	STREET LIGHTING	CAMBRIDGE ROAD	GRIMSBY	525262.47	408381.7		08/07/2024	70142	1 Urbis LED	Teceo 48 LED 700mA	104 Watts	8.00 Metres	Galvanised Steel	
Y	10	STREET LIGHTING	CAMBRIDGE ROAD	GRIMSBY	525211.61	408395.84		08/07/2024	70143	1 Urbis LED	Teceo 48 LED 700mA	104 Watts	8.00 Metres	Galvanised Steel	
Y	11	STREET LIGHTING	CAMBRIDGE ROAD	GRIMSBY	525172.72	408381.34		08/07/2024	70144	1 Urbis LED	Teceo 48 LED 700mA	104 Watts	8.00 Metres	Galvanised Steel	
Y	12	STREET LIGHTING	CAMBRIDGE ROAD	GRIMSBY	525184.43	408372.89	2001		45143	Urbis	Axia 8 LED 350mA	10 Watts	6.00 Metres	Steel	
Y	13	STREET LIGHTING	CAMBRIDGE ROAD	GRIMSBY	525161.23	408360.24	2001		45144	Urbis	Axia 8 LED 350mA	10 Watts	6.00 Metres	Steel	
Y	14	STREET LIGHTING	CAMBRIDGE ROAD	GRIMSBY	525149.87	408396.73		08/07/2024	70145	1 Urbis LED	Teceo 48 LED 700mA	104 Watts	8.00 Metres	Galvanised Steel	
Y	15	STREET LIGHTING	CAMBRIDGE ROAD	GRIMSBY	525090.31	408381.86	2012		45146	1 Urbis LED	Teceo 48 LED 700mA	104 Watts	8.00 Metres	Steel	
Y	16	STREET LIGHTING	CAMBRIDGE ROAD	GRIMSBY	525060.85	408363.42	2002		45147	1 Urbis LED	Teceo 24 LED 500mA	40 Watts	6.00 Metres	Steel	
Y	17	STREET LIGHTING	CAMBRIDGE ROAD	GRIMSBY	525052.54	408398.32		08/07/2024	70146	1 Urbis LED	Teceo 48 LED 700mA	104 Watts	8.00 Metres	Galvanised Steel	
Y	18	STREET LIGHTING	CAMBRIDGE ROAD	GRIMSBY	525016.8	408385.97		08/07/2024	70147	1 Urbis LED	Teceo 48 LED 700mA	104 Watts	8.00 Metres	Galvanised Steel	
Y	19	STREET LIGHTING	CAMBRIDGE ROAD	GRIMSBY	524981.57	408398.74		08/07/2024	70148	1 Urbis LED	Teceo 48 LED 700mA	104 Watts	8.00 Metres	Galvanised Steel	
Y	20	STREET LIGHTING	CAMBRIDGE ROAD	GRIMSBY	524944.81	408385.97		08/07/2024	70149	1 Urbis LED	Teceo 48 LED 700mA	104 Watts	8.00 Metres	Galvanised Steel	
Y	21	STREET LIGHTING	CAMBRIDGE ROAD	GRIMSBY	524906.98	408398.83		08/07/2024	70150	1 Urbis LED	Teceo 48 LED 700mA	104 Watts	8.00 Metres	Galvanised Steel	
Y	22	STREET LIGHTING	CAMBRIDGE ROAD	GRIMSBY	524867.6	408385.14		08/07/2024	70151	1 Urbis LED	Teceo 48 LED 700mA	104 Watts	8.00 Metres	Galvanised Steel	
Y	23	STREET LIGHTING	CAMBRIDGE ROAD	GRIMSBY	524826.87	408398.83		08/07/2024	70152	1 Urbis LED	Teceo 48 LED 700mA	104 Watts	8.00 Metres	Galvanised Steel	
Y	24	STREET LIGHTING	CAMBRIDGE ROAD	GRIMSBY	524794.15	408384.81		08/07/2024	70153	1 Urbis LED	Teceo 48 LED 700mA	104 Watts	8.00 Metres	Galvanised Steel	
Y	25	STREET LIGHTING	CAMBRIDGE ROAD	GRIMSBY	524754.63	408399.46	2021	01/02/2021	69807	Urbis	Axia 48 LED 960mA	104 Watts	10.00 Metres	Galvanised Steel	
Y	26	STREET LIGHTING	CAMBRIDGE ROAD	GRIMSBY	524698.36	408381.99	2021	01/02/2021	69808	Urbis	Axia 48 LED 960mA	104 Watts	10.00 Metres	Galvanised Steel	
Y	27	STREET LIGHTING	CAMBRIDGE ROAD	GRIMSBY	524671.39	408399.61	2012		69809	Urbis	Axia 16 LED 350mA	19 Watts	6.00 Metres	Steel	
Y	28	STREET LIGHTING	CAMBRIDGE ROAD	GRIMSBY	524655.26	408371.37	2021	01/02/2021	69810	Urbis	Axia 48 LED 960mA	104 Watts	10.00 Metres	Galvanised Steel	
Y	29	STREET LIGHTING	CAMBRIDGE ROAD	GRIMSBY	524632.37	408399.77	2012		69811	Urbis	Axia 16 LED 350mA	19 Watts	6.00 Metres	Steel	
Y	1	STREET LIGHTING	CARNARVON AVENUE	GRIMSBY	525945.21	407907.02	2016	16/08/2016	45273	1 Urbis LED	Axia 16 LED 500mA	28 Watts	6.00 Metres	Galvanised Steel	
Y	2	STREET LIGHTING	CARNARVON AVENUE	GRIMSBY	525923	407938	2002		45274	1 Urbis LED	Axia 16 LED 500mA	28 Watts	6.00 Metres	Stainless Steel	
Y	3	STREET LIGHTING	CARNARVON AVENUE	GRIMSBY	525915.33	407957.91	2016	16/08/2016	45275	1 Urbis LED	Axia 16 LED 500mA	28 Watts	6.00 Metres	Galvanised Steel	
Y	1	STREET LIGHTING	CARNFORTH CRESCENT	GRIMSBY	525130.71	407792.55	2001		45276	1 Urbis LED	Teceo 24 LED 500mA	40 Watts	6.00 Metres	Steel	
Y	2	STREET LIGHTING	CARNFORTH CRESCENT	GRIMSBY	525097.57	407793.59	2001		45277	1 Urbis LED	Teceo 24 LED 500mA	40 Watts	6.00 Metres	Steel	
Y	3	STREET LIGHTING	CARNFORTH CRESCENT	GRIMSBY	525064.97	407795.49	2001		45278	1 Urbis LED	Teceo 24 LED 500mA	40 Watts	6.00 Metres	Steel	
Y	4	STREET LIGHTING	CARNFORTH CRESCENT	GRIMSBY	525031.45	407796.78	2001		45279	1 Urbis LED	Teceo 24 LED 500mA	40 Watts	6.00 Metres	Steel	
Y	5	STREET LIGHTING	CARNFORTH CRESCENT	GRIMSBY	525021.93	407791.44	2001		45280	Urbis	Axia 8 LED 350mA	10 Watts	6.00 Metres	Steel	
Y	6	STREET LIGHTING	CARNFORTH CRESCENT	GRIMSBY	525009.41	407771.23	2001		45281	Urbis	Axia 8 LED 350mA	10 Watts	5.00 Metres	Steel	
Y	7	STREET LIGHTING	CARNFORTH CRESCENT	GRIMSBY	525021.94	407814.8	2001		45282	Urbis	Axia 8 LED 350mA	10 Watts	6.00 Metres	Steel	
Y	8	STREET LIGHTING	CARNFORTH CRESCENT	GRIMSBY	525005.93	407803.24	2001		45283	1 Urbis LED	Teceo 24 LED 500mA	40 Watts	6.00 Metres	Steel	
Y	9	STREET LIGHTING	CARNFORTH CRESCENT	GRIMSBY	524990.28	407790.88	2001		45284	Urbis	Axia 16 LED 350mA	19 Watts	5.00 Metres	Galvanised Steel	
Y	10	STREET LIGHTING	CARNFORTH CRESCENT	GRIMSBY	524984.06	407770.16	2001		45285	Urbis	Axia 8 LED 350mA	10 Watts	5.00 Metres	Steel	
Y	11	STREET LIGHTING	CARNFORTH CRESCENT	GRIMSBY	524960.6	407769.21	2001		45286	Urbis	Axia 8 LED 350mA	10 Watts	5.00 Metres	Steel	
Y	12	STREET LIGHTING	CARNFORTH CRESCENT	GRIMSBY	524953.3	407780.46	2001		45287	Urbis	Axia 8 LED 350mA	10 Watts	5.00 Metres	Steel	
Y	13	STREET LIGHTING	CARNFORTH CRESCENT	GRIMSBY	524961.87	407802.77	2001		45288	Urbis	Axia 8 LED 350mA	10 Watts	5.00 Metres	Steel	
Y	14	STREET LIGHTING	CARNFORTH CRESCENT	GRIMSBY	524970.44	407823.14	2001		45289	Urbis	Axia 8 LED 350mA	10 Watts	5.00 Metres	Steel	
Y	15	STREET LIGHTING	CARNFORTH CRESCENT	GRIMSBY	524991.81	407815.81	2001		45290	1 Urbis LED	Teceo 24 LED 500mA	40 Watts	6.00 Metres	Steel	
Y	16	STREET LIGHTING	CARNFORTH CRESCENT	GRIMSBY	525000.37	407838.75	2001		45291	Urbis	Axia 8 LED 350mA	10 Watts	6.00 Metres	Steel	
Y	17	STREET LIGHTING	CARNFORTH CRESCENT	GRIMSBY	524981.15	407842.83	2001		45292	1 Urbis LED	Teceo 24 LED 500mA	40 Watts	6.00 Metres	Steel	
Y	18	STREET LIGHTING	CARNFORTH CRESCENT	GRIMSBY	524994.31	407872.25	2001		45293	1 Urbis LED	Teceo 24 LED 500mA	40 Watts	6.00 Metres	Steel	
Y	19	STREET LIGHTING	CARNFORTH CRESCENT	GRIMSBY	525004.15	407900.24	2001		45294	Urbis	Axia 8 LED 350mA	10 Watts	6.00 Metres	Steel	
Y	20	STREET LIGHTING	CARNFORTH CRESCENT	GRIMSBY	524989.66	407907.21	2001		45295	1 Urbis LED	Teceo 24 LED 500mA	40 Watts	6.00 Metres	Steel	
Y	21	STREET LIGHTING	CARNFORTH CRESCENT	GRIMSBY	525023.16	407909.7	2001		45296	Urbis	Axia 8 LED 350mA	10 Watts	5.00 Metres	Galvanised Steel	
Y	22	STREET LIGHTING	CARNFORTH CRESCENT	GRIMSBY	525024.56	407922.66	2001		45297	Urbis	Axia 8 LED 350mA	10 Watts	5.00 Metres	Galvanised Steel	
Y	23	STREET LIGHTING	CARNFORTH CRESCENT	GRIMSBY	525007.37	407937.63	2001		45298	Urbis	Axia 8 LED 350mA	10 Watts	6.00 Metres	Steel	
Y	24	STREET LIGHTING	CARNFORTH CRESCENT	GRIMSBY	524992.03	407941.78	2001		45299	1 Urbis LED	Teceo 24 LED 500mA	40 Watts	6.00 Metres	Steel	
Y	25	STREET LIGHTING	CARNFORTH CRESCENT	GRIMSBY	524992.24	407974.71	2001		45300	1 Urbis LED	Teceo 24 LED 500mA	40 Watts	6.00 Metres	Steel	
Y	26	STREET LIGHTING	CARNFORTH CRESCENT	GRIMSBY	524990.83	408005.42	2001		45301	1 Urbis LED	Teceo 24 LED 500mA	40 Watts	6.00 Metres	Steel	
Y	27	STREET LIGHTING	CARNFORTH CRESCENT	GRIMSBY	524998.62	408035.26	2001		45302	1 Urbis LED	Teceo 24 LED 500mA	40 Watts	6.00 Metres	Steel	
Y	28	STREET LIGHTING	CARNFORTH CRESCENT	GRIMSBY	525014.89	408037.51	2001		45303	Urbis	Axia 8 LED 350mA	10 Watts	5.00 Metres	Steel	
Y	29	STREET LIGHTING	CARNFORTH CRESCENT	GRIMSBY	525013.96	408053.35	2001		45304	Urbis	Axia 8 LED 350mA	10 Watts	5.00 Metres	Steel	
Y	30	STREET LIGHTING	CARNFORTH CRESCENT	GRIMSBY	524998.86	408066.64	2001		45305	1 Urbis LED	Teceo 24 LED 500mA	40 Watts	6.00 Metres	Steel	
Y	31	STREET LIGHTING	CARNFORTH CRESCENT	GRIMSBY	524989.31	408101.62	2001		45306	1 Urbis LED	Teceo 24 LED 500mA	40 Watts	6.00 Metres	Steel	
Y	32	STREET LIGHTING	CARNFORTH CRESCENT	GRIMSBY	524992.32	408135.58	2001		45307	1 Urbis LED	Teceo 24 LED 500mA	40 Watts	6.00 Metres	Steel	
Y	33	STREET LIGHTING	CARNFORTH CRESCENT	GRIMSBY	524997.3	408172.04	2001		45308	1 Urbis LED	Teceo 24 LED 500mA	40 Watts	6.00 Metres	Steel	
Y	34	STREET LIGHTING	CARNFORTH CRESCENT	GRIMSBY	525004.02	408196.98	2001		45309	1 Urbis LED	Teceo 24 LED 500mA	40 Watts	6.00 Metres	Steel	
Y	35	STREET LIGHTING	CARNFORTH CRESCENT	GRIMSBY	525022.65	408201.87	2001		45310	1 Urbis LED	Teceo 24 LED 500mA	40 Watts	6.00 Metres	Steel	
Y	36	STREET LIGHTING	CARNFORTH CRESCENT	GRIMSBY	525043.83	408217.18	2003		45311	1 Urbis LED	Teceo 24 LED 500mA	40 Watts	6.00 Metres	Stainless Steel	
Y	37	STREET LIGHTING	CARNFORTH CRESCENT	GRIMSBY	525054	408195.16	2001		45312	Urbis	Axia 8 LED 350mA	10 Watts	5.00 Metres	Steel	
Y	38	STREET LIGHTING	CARNFORTH CRESCENT	GRIMSBY	525060.58	408222.39	2001		45313	1 Urbis LED	Teceo 24 LED 500mA	40 Watts	6.00 Metres	Steel	
Y	39	STREET LIGHTING	CARNFORTH CRESCENT	GRIMSBY	525067.69	408188.98	2001		45314	Urbis	Axia 8 LED 350mA	10 Watts	5.00 Metres	Steel	
Y	40	STREET LIGHTING	CARNFORTH CRESCENT	GRIMSBY	525067.35	408202.64	2001		45315	Urbis	Axia 8 LED 350mA	10 Watts	6.00 Metres	Steel	
Y	41	STREET LIGHTING	CARNFORTH CRESCENT	GRIMSBY	525081.61	408195.25	2001		45316	Urbis	Axia 8 LED 350mA	10 Watts	5.00 Metres	Steel	
Y	42	STREET LIGHTING	CARNFORTH CRESCENT	GRIMSBY	525082.51	408216.28	2013		45317	1 Urbis LED	Teceo 24 LED 500mA	40 Watts	6.00 Metres	Galvanised Steel	
Y	43	STREET LIGHTING	CARNFORTH CRESCENT	GRIMSBY	525119.25	408204.89	2001		45318	1 Urbis LED	Teceo 24 LED 500mA	40 Watts	6.00 Metres	Steel	
Y	44	STREET LIGHTING	CARNFORTH CRESCENT	GRIMSBY	525145.65	408213.54	2001		45319	1 Urbis LED	Teceo 24 LED 500mA	40 Watts	6.00 Metres	Steel	
Y	45	STREET LIGHTING	CARNFORTH CRESCENT	GRIMSBY	525175.58	408198.14	2001		45320	1 Urbis LED	Teceo 24 LED 500mA	40 Watts	6.00 Metres	Steel	
Y	46	STREET LIGHTING	CARNFORTH CRESCENT	GRIMSBY	525207.31	408203.11		02/12/2024	45321	Urbis	Teceo 24 LED 500mA	40 Watts	6.00 Metres	Galvanised Steel	
Y	47	STREET LIGHTING	CARNFORTH CRESCENT	GRIMSBY	525236.87	408198.21	2001		45322	1 Urbis LED	Teceo 24 LED 500mA	40 Watts	6.00 Metres	Steel	
Y	48	STREET LIGHTING	CARNFORTH CRESCENT	GRIMSBY	525264.78	408181.97	2001		45323	1 Urbis LED	Teceo 24 LED 500mA	40 Watts	6.00 Metres	Steel	
Y	49	STREET LIGHTING	CARNFORTH CRESCENT	GRIMSBY	525294.25	408181.41	2001		45324	1 Urbis LED	Teceo 24 LED 500mA	40 Watts	6.00 Metres	Steel	
Y	50	STREET LIGHTING	CARNFORTH CRESCENT	GRIMSBY	525321.94	408198.13	2020	19/03/2020	67820	Urbis	Teceo 24 LED 500mA	40 Watts	6.00 Metres	Galvanised Steel	
Y	51	STREET LIGHTING	CARNFORTH CRESCENT	GRIMSBY	525345.62	408207.51	2001		45326	1 Urbis LED	Teceo 24 LED 500mA	40 Watts	6.00 Metres	Steel	
Y	52	STREET LIGHTING	CARNFORTH CRESCENT	GRIMSBY	525383.06	408213.61	2001		45327	1 Urbis LED	Teceo 24 LED 500mA	40 Watts	6.00 Metres	Steel	
Y	53	STREET LIGHTING	CARNFORTH CRESCENT	GRIMSBY	525404.18	408234.76	2001		45328	1 Urbis LED	Teceo 24 LED 500mA	40 Watts	6.00 Metres	Steel	
Y	54	STREET LIGHTING	CARNFORTH CRESCENT	GRIMSBY	525434.97	408244.89	2001		45329	1 Urbis LED	Teceo 24 LED 500mA	40 Watts	6.00 Metres	Steel	
Y	55	STREET LIGHTING	CARNFORTH CRESCENT	GRIMSBY	525466.12	408241.45	2001		45330	1 Urbis LED	Teceo 24 LED 500mA	40 Watts	6.00 Metres	Steel	
Y	1	STREET LIGHTING	CARNFORTH CRESCENT COMMUNITY	GRIMSBY	525397.11	408204.1	1983		45331	1 Urbis LED	Axia 16 LED 500mA	28 Watts	5.00 Metres	Galvanised Steel	
Y	2	STREET LIGHTING	CARNFORTH CRESCENT COMMUNITY	GRIMSBY	525400.72	408178.5	1983		45332	1 Urbis LED	Axia 16 LED 500mA	28 Watts	6.00 Metres	Galvanised Steel	
Y	1	STREET LIGHTING	CASTLEFORD AVENUE	GRIMSBY	525082.86	407814.92	2001		45458	1 Urbis LED	Axia 16 LED 500mA	28 Watts	6.00 Metres	Steel	
Y	2	STREET LIGHTING	CASTLEFORD AVENUE	GRIMSBY	525076.76	407847.57	2001		45459	1 Urbis LED	Axia 16 LED 500mA	28 Watts	6.00 Metres	Steel	
Y	3	STREET LIGHTING	CASTLEFORD AVENUE	GRIMSBY	525070.02	407847.2	2001		45460	1 Urbis LED	Axia 16 LED 500mA	28 Watts	6.00 Metres	Galvanised Steel	
Y	4	STREET LIGHTING	CASTLEFORD AVENUE	GRIMSBY	525057.81	407866.62	2001		45461	1 Urbis LED	Axia 16 LED 500mA	28 Watts	6.00 Metres	Galvanised Steel	
Y	5	STREET LIGHTING	CASTLEFORD AVENUE	GRIMSBY	525081	407878	2001		45462	1 Urbis LED	Axia 16 LED 500mA	28 Watts	6.00 Metres	Steel	
Y	6	STREET LIGHTING	CASTLEFORD AVENUE	GRIMSBY	525075.88	407884.41	2001		45463	1 Urbis LED	Axia 16 LED 500mA	28 Watts	6.00 Metres	Galvanised Steel	
Y	7	STREET LIGHTING	CASTLEFORD AVENUE	GRIMSBY	525094.66	407909.84	2001		45464	1 Urbis LED	Axia 16 LED 500mA	28 Watts	6.00 Metres	Steel	
Y	8	STREET LIGHTING	CASTLEFORD AVENUE	GRIMSBY	525106.63	407915.92	2001		45465	1 Urbis LED	Axia 16 LED 500mA	28 Watts	6.00 Metres	Galvanised Steel	
Y	9	STREET LIGHTING	CASTLEFORD AVENUE	GRIMSBY	525109.87	407934.55	2001		45466	1 Urbis LED	Axia 16 LED 500mA	28 Watts	6.00 Metres	Galvanised Steel	
Y	10	STREET LIGHTING	CASTLEFORD AVENUE	GRIMSBY	525090.94	407941.64	2001		45467	1 Urbis LED	Axia 16 LED 500mA	28 Watts	6.00 Metres	Steel	
Y	11	STREET LIGHTING	CASTLEFORD AVENUE	GRIMSBY	525102.34	407973.39	2001		45468	1 Urbis LED	Axia 16 LED 500mA	28 Watts	6.00 Metres	Steel	
Y	1	STREET LIGHTING	CHEPSTOW GROVE	GRIMSBY	525114.11	408092.97	2001		45783	1 Urbis LED	Axia 16 LED 500mA	28 Watts	6.00 Metres	Steel	
Y	2	STREET LIGHTING	CHEPSTOW GROVE	GRIMSBY	525082.54	408102.65	2001		45784	1 Urbis LED	Axia 16 LED 500mA	28 Watts	6.00 Metres	Steel	
Y	3	STREET LIGHTING	CHEPSTOW GROVE	GRIMSBY	525078.49	408084.98	2001		45785	1 Urbis LED	Axia 16 LED 500mA	28 Watts	5.00 Metres	Steel	
Y	4	STREET LIGHTING	CHEPSTOW GROVE	GRIMSBY	525079.61	408118.87	2001		45786	1 Urbis LED	Axia 16 LED 500mA	28 Watts	5.00 Metres	Steel	

Y	5	STREET LIGHTING	CHEPSTOW GROVE	GRIMSBY	525074.27	408132.48	2001		45787	1 Urbis LED	Axia 16 LED 500mA	28 Watts	5.00 Metres	Steel	
Y	6	STREET LIGHTING	CHEPSTOW GROVE	GRIMSBY	525060.64	408071.05	2001		45788	1 Urbis LED	Axia 16 LED 500mA	28 Watts	5.00 Metres	Steel	
Y	7	STREET LIGHTING	CHEPSTOW GROVE	GRIMSBY	525053.3	408132.9	2001		45789	1 Urbis LED	Axia 16 LED 500mA	28 Watts	5.00 Metres	Steel	
Y	8	STREET LIGHTING	CHEPSTOW GROVE	GRIMSBY	525046.91	408121.04	2001		45790	1 Urbis LED	Axia 16 LED 500mA	28 Watts	5.00 Metres	Steel	
Y	9	STREET LIGHTING	CHEPSTOW GROVE	GRIMSBY	525045.31	408080.34	2001		45791	1 Urbis LED	Axia 16 LED 500mA	28 Watts	5.00 Metres	Steel	
Y	10	STREET LIGHTING	CHEPSTOW GROVE	GRIMSBY	525047.71	408096.77	2001		45792	1 Urbis LED	Axia 16 LED 500mA	28 Watts	6.00 Metres	Steel	
Y	11	STREET LIGHTING	CHEPSTOW GROVE	GRIMSBY	525011.27	408106.39	2001		45793	1 Urbis LED	Axia 16 LED 500mA	28 Watts	6.00 Metres	Steel	
Y	1	STREET LIGHTING	CHESTER WALK	GRIMSBY	525129.55	408001.11	2007		45835	1 Urbis LED	Axia 16 LED 500mA	28 Watts	6.00 Metres	Galvanised Steel	
Y	2	STREET LIGHTING	CHESTER WALK	GRIMSBY	525130.86	408022.64	2007		45836	1 Urbis LED	Axia 16 LED 500mA	28 Watts	6.00 Metres	Galvanised Steel	
Y	3	STREET LIGHTING	CHESTER WALK	GRIMSBY	525132.05	408044.71	2007		45837	1 Urbis LED	Axia 16 LED 500mA	28 Watts	6.00 Metres	Galvanised Steel	
Y	4	STREET LIGHTING	CHESTER WALK	GRIMSBY	525133.72	408075.81	2007		45838	1 Urbis LED	Axia 16 LED 500mA	28 Watts	6.00 Metres	Galvanised Steel	
Y	5	STREET LIGHTING	CHESTER WALK	GRIMSBY	525125.45	408107.11	2015	30/07/2015	45839	1 Urbis LED	Axia 16 LED 500mA	28 Watts	6.00 Metres	Galvanised Steel	
Y	6	STREET LIGHTING	CHESTER WALK	GRIMSBY	525126.72	408131.86	2007		45840	1 Urbis LED	Axia 16 LED 500mA	28 Watts	6.00 Metres	Galvanised Steel	
Y	7	STREET LIGHTING	CHESTER WALK	GRIMSBY	525128.69	408161.76	2007		45841	1 Urbis LED	Axia 16 LED 500mA	28 Watts	6.00 Metres	Galvanised Steel	
Y	8	STREET LIGHTING	CHESTER WALK	GRIMSBY	525131.84	408191.72	2007		45842	1 Urbis LED	Axia 16 LED 500mA	28 Watts	6.00 Metres	Galvanised Steel	
Y	1	STREET LIGHTING	CHINGFORD AVENUE	GRIMSBY	525167.35	407982.77	2001		45922	1 Urbis LED	Axia 16 LED 500mA	28 Watts	6.00 Metres	Steel	
Y	2	STREET LIGHTING	CHINGFORD AVENUE	GRIMSBY	525135	407987.73	2001		45923	1 Urbis LED	Axia 16 LED 500mA	28 Watts	6.00 Metres	Steel	
Y	3	STREET LIGHTING	CHINGFORD AVENUE	GRIMSBY	525107.45	407997.3	2001		45924	1 Urbis LED	Axia 16 LED 500mA	28 Watts	6.00 Metres	Steel	
Y	4	STREET LIGHTING	CHINGFORD AVENUE	GRIMSBY	525071.29	407997.54	2001		45925	1 Urbis LED	Axia 16 LED 500mA	28 Watts	6.00 Metres	Steel	
Y	5	STREET LIGHTING	CHINGFORD AVENUE	GRIMSBY	525067.97	408012	2001		45926	Urbis	Axia 16 LED 350mA	19 Watts	5.00 Metres	Galvanised Steel	
Y	6	STREET LIGHTING	CHINGFORD AVENUE	GRIMSBY	525048.97	408010.67	2001		45927	Urbis	Axia 16 LED 350mA	19 Watts	5.00 Metres	Galvanised Steel	
Y	7	STREET LIGHTING	CHINGFORD AVENUE	GRIMSBY	525038.09	407988.56	2001		45928	1 Urbis LED	Axia 16 LED 500mA	28 Watts	6.00 Metres	Steel	
Y	8	STREET LIGHTING	CHINGFORD AVENUE	GRIMSBY	525011.34	407993.89	2001		45929	1 Urbis LED	Axia 16 LED 500mA	28 Watts	6.00 Metres	Steel	
Y	1	STREET LIGHTING	COVENTRY AVENUE	GRIMSBY	525146.16	408312.7	2001		46821	1 Urbis LED	Axia 16 LED 500mA	28 Watts	6.00 Metres	Steel	
Y	2	STREET LIGHTING	COVENTRY AVENUE	GRIMSBY	525176.36	408303.78	2001		46822	1 Urbis LED	Axia 16 LED 500mA	28 Watts	6.00 Metres	Steel	
Y	3	STREET LIGHTING	COVENTRY AVENUE	GRIMSBY	525181.56	408288.99	2001		46823	1 Urbis LED	Axia 16 LED 500mA	28 Watts	6.00 Metres	Steel	
Y	4	STREET LIGHTING	COVENTRY AVENUE	GRIMSBY	525192.94	408272.35	2001		46824	1 Urbis LED	Axia 16 LED 500mA	28 Watts	5.00 Metres	Galvanised Steel	
Y	5	STREET LIGHTING	COVENTRY AVENUE	GRIMSBY	525205.64	408288	2001		46825	1 Urbis LED	Axia 16 LED 500mA	28 Watts	6.00 Metres	Steel	
Y	6	STREET LIGHTING	COVENTRY AVENUE	GRIMSBY	525207.95	408311.85	2001		46826	1 Urbis LED	Axia 16 LED 500mA	28 Watts	6.00 Metres	Steel	
Y	7	STREET LIGHTING	COVENTRY AVENUE	GRIMSBY	525242.31	408302.66	2001		46827	1 Urbis LED	Axia 16 LED 500mA	28 Watts	6.00 Metres	Steel	
Y	8	STREET LIGHTING	COVENTRY AVENUE	GRIMSBY	525254.51	408284.14	2001		46828	1 Urbis LED	Axia 16 LED 500mA	28 Watts	6.00 Metres	Steel	
Y	9	STREET LIGHTING	COVENTRY AVENUE	GRIMSBY	525268.9	408264.7	2001		46829	1 Urbis LED	Axia 16 LED 500mA	28 Watts	6.00 Metres	Galvanised Steel	
Y	10	STREET LIGHTING	COVENTRY AVENUE	GRIMSBY	525281.32	408282.82	2001		46830	1 Urbis LED	Axia 16 LED 500mA	28 Watts	6.00 Metres	Steel	
Y	11	STREET LIGHTING	COVENTRY AVENUE	GRIMSBY	525266.79	408310.17	2001		46831	1 Urbis LED	Axia 16 LED 500mA	28 Watts	6.00 Metres	Steel	
Y	12	STREET LIGHTING	COVENTRY AVENUE	GRIMSBY	525298.32	408310.2	2001		46832	1 Urbis LED	Axia 16 LED 500mA	28 Watts	6.00 Metres	Steel	
Y	13	STREET LIGHTING	COVENTRY AVENUE	GRIMSBY	525328.55	408309.57	2001		46833	1 Urbis LED	Axia 16 LED 500mA	28 Watts	6.00 Metres	Steel	
Y	14	STREET LIGHTING	COVENTRY AVENUE	GRIMSBY	525354.1	408292.45	2001		46834	1 Urbis LED	Axia 16 LED 500mA	28 Watts	6.00 Metres	Steel	
Y	15	STREET LIGHTING	COVENTRY AVENUE	GRIMSBY	525375.45	408291.71	2001		46835	1 Urbis LED	Axia 16 LED 500mA	28 Watts	6.00 Metres	Galvanised Steel	
Y	16	STREET LIGHTING	COVENTRY AVENUE	GRIMSBY	525397.35	408289.77	2001		46836	1 Urbis LED	Axia 16 LED 500mA	28 Watts	5.00 Metres	Galvanised Steel	
Y	17	STREET LIGHTING	COVENTRY AVENUE	GRIMSBY	525384.63	408271.71	2001		46837	1 Urbis LED	Axia 16 LED 500mA	28 Watts	6.00 Metres	Galvanised Steel	
Y	18	STREET LIGHTING	COVENTRY AVENUE	GRIMSBY	525359.79	408260.21	2001		46838	1 Urbis LED	Axia 16 LED 500mA	28 Watts	6.00 Metres	Steel	
Y	19	STREET LIGHTING	COVENTRY AVENUE	GRIMSBY	525372.41	408233.49	2001		46839	1 Urbis LED	Axia 16 LED 500mA	28 Watts	6.00 Metres	Steel	
Y	1	STREET LIGHTING	CROMER AVENUE	GRIMSBY	525119.58	408228.58	2001		46918	1 Urbis LED	Axia 16 LED 500mA	28 Watts	6.00 Metres	Steel	
Y	2	STREET LIGHTING	CROMER AVENUE	GRIMSBY	525121.25	408259.48	2001		46919	1 Urbis LED	Axia 16 LED 500mA	28 Watts	6.00 Metres	Steel	
Y	3	STREET LIGHTING	CROMER AVENUE	GRIMSBY	525122.13	408286.71	2001		46920	1 Urbis LED	Axia 16 LED 500mA	28 Watts	6.00 Metres	Steel	
Y	4	STREET LIGHTING	CROMER AVENUE	GRIMSBY	525107.43	408300.92	2001		46921	1 Urbis LED	Axia 16 LED 500mA	28 Watts	6.00 Metres	Steel	
Y	5	STREET LIGHTING	CROMER AVENUE	GRIMSBY	525083.24	408301.59	2001		46922	1 Urbis LED	Axia 16 LED 500mA	28 Watts	6.00 Metres	Galvanised Steel	
Y	6	STREET LIGHTING	CROMER AVENUE	GRIMSBY	525083.81	408319.65	2001		46923	1 Urbis LED	Axia 16 LED 500mA	28 Watts	6.00 Metres	Galvanised Steel	
Y	7	STREET LIGHTING	CROMER AVENUE	GRIMSBY	525107.6	408318.37	2001		46924	1 Urbis LED	Axia 16 LED 500mA	28 Watts	6.00 Metres	Steel	
Y	8	STREET LIGHTING	CROMER AVENUE	GRIMSBY	525123.26	408315.55	2001		46925	1 Urbis LED	Axia 16 LED 500mA	28 Watts	6.00 Metres	Steel	
Y	9	STREET LIGHTING	CROMER AVENUE	GRIMSBY	525135.44	408342.62	2001		46926	1 Urbis LED	Axia 16 LED 500mA	28 Watts	6.00 Metres	Steel	
Y	10	STREET LIGHTING	CROMER AVENUE	GRIMSBY	525136.75	408372.4	2001		46927	1 Urbis LED	Axia 16 LED 500mA	28 Watts	6.00 Metres	Steel	
Y	1	STREET LIGHTING	EASTERN INWAY	GRIMSBY	525523.13	408025.71	2001		47738	1 Urbis LED	Axia 16 LED 500mA	28 Watts	6.00 Metres	Steel	
Y	2	STREET LIGHTING	EASTERN INWAY	GRIMSBY	525518.31	408039.06	2001		47739	1 Urbis LED	Axia 16 LED 500mA	28 Watts	6.00 Metres	Steel	
Y	3	STREET LIGHTING	EASTERN INWAY	GRIMSBY	525495.31	408015.44	2001		47740	1 Urbis LED	Axia 16 LED 500mA	28 Watts	6.00 Metres	Steel	
Y	4	STREET LIGHTING	EASTERN INWAY	GRIMSBY	525490.63	408028.14	2001		47741	1 Urbis LED	Axia 16 LED 500mA	28 Watts	6.00 Metres	Steel	
Y	5	STREET LIGHTING	EASTERN INWAY	GRIMSBY	525461.02	408016.68	2001		47742	1 Urbis LED	Axia 16 LED 500mA	28 Watts	6.00 Metres	Steel	
Y	6	STREET LIGHTING	EASTERN INWAY	GRIMSBY	525438.35	407996.74	2001		47743	1 Urbis LED	Axia 16 LED 500mA	28 Watts	6.00 Metres	Steel	
Y	7	STREET LIGHTING	EASTERN INWAY	GRIMSBY	525402.7	407994.11	2001		47744	1 Urbis LED	Axia 16 LED 500mA	28 Watts	6.00 Metres	Steel	
Y	8	STREET LIGHTING	EASTERN INWAY	GRIMSBY	525382.68	407974.08	2001		47745	1 Urbis LED	Axia 16 LED 500mA	28 Watts	6.00 Metres	Steel	
Y	9	STREET LIGHTING	EASTERN INWAY	GRIMSBY	525355.45	407963.67	2001		47746	1 Urbis LED	Axia 16 LED 500mA	28 Watts	6.00 Metres	Steel	
Y	10	STREET LIGHTING	EASTERN INWAY	GRIMSBY	525323.79	407951.6	2001		47747	1 Urbis LED	Axia 16 LED 500mA	28 Watts	6.00 Metres	Steel	
Y	11	STREET LIGHTING	EASTERN INWAY	GRIMSBY	525296.51	407940.52	2001		47748	1 Urbis LED	Axia 16 LED 500mA	28 Watts	6.00 Metres	Steel	
Y	12	STREET LIGHTING	EASTERN INWAY	GRIMSBY	525269.72	407942.25	2001		47749	1 Urbis LED	Axia 16 LED 500mA	28 Watts	6.00 Metres	Steel	
Y	13	STREET LIGHTING	EASTERN INWAY	GRIMSBY	525244.03	407932.24	2001		47750	1 Urbis LED	Axia 16 LED 500mA	28 Watts	6.00 Metres	Steel	
Y	14	STREET LIGHTING	EASTERN INWAY	GRIMSBY	525219.21	407910.72	2001		47751	1 Urbis LED	Axia 16 LED 500mA	28 Watts	6.00 Metres	Steel	
Y	15	STREET LIGHTING	EASTERN INWAY	GRIMSBY	525185.01	407909.71	2001		47752	1 Urbis LED	Axia 16 LED 500mA	28 Watts	6.00 Metres	Steel	
Y	1	STREET LIGHTING	HALTON WAY	GRIMSBY	525410.89	407856.34	2018	26/10/2018	67191	Urbis	Axia 16 LED 350mA	19 Watts	6.00 Metres	Galvanised Steel	
Y	2	STREET LIGHTING	HALTON WAY	GRIMSBY	525442.13	407848.23	2018	26/10/2018	67281	Urbis	Axia 16 LED 350mA	19 Watts	6.00 Metres	Galvanised Steel	
Y	3	STREET LIGHTING	HALTON WAY	GRIMSBY	525477.02	407843.57	2018	26/10/2018	67282	Urbis	Axia 16 LED 350mA	19 Watts	6.00 Metres	Galvanised Steel	
Y	4	STREET LIGHTING	HALTON WAY	GRIMSBY	525511.35	407843.29	2018	26/10/2018	67194	Urbis	Axia 16 LED 350mA	19 Watts	6.00 Metres	Galvanised Steel	
Y	5	STREET LIGHTING	HALTON WAY	GRIMSBY	525482.13	407877.12	2018	26/10/2018	67283	Urbis	Axia 16 LED 350mA	19 Watts	6.00 Metres	Galvanised Steel	
Y	6	STREET LIGHTING	HALTON WAY	GRIMSBY	525504.94	407896.29	2018	26/10/2018	67284	Urbis	Axia 16 LED 350mA	19 Watts	6.00 Metres	Galvanised Steel	
Y	1	STREET LIGHTING	MEDWAY PLACE	GRIMSBY	525288.81	407962.58	2016	30/06/2016	53504	Urbis	Axia 16 LED 350mA	19 Watts	6.00 Metres	Galvanised Steel	
Y	2	STREET LIGHTING	MEDWAY PLACE	GRIMSBY	525292.48	407992.83	2016	30/06/2016	53505	Urbis	Axia 16 LED 350mA	19 Watts	6.00 Metres	Galvanised Steel	
Y	3	STREET LIGHTING	MEDWAY PLACE	GRIMSBY	525312.48	408008.09	2016	30/06/2016	53506	Urbis	Axia 8 LED 350mA	10 Watts	6.00 Metres	Steel	
Y	4	STREET LIGHTING	MEDWAY PLACE	GRIMSBY	525291.47	408020.3	2016	30/06/2016	53507	Urbis	Axia 16 LED 350mA	19 Watts	6.00 Metres	Galvanised Steel	
Y	5	STREET LIGHTING	MEDWAY PLACE	GRIMSBY	525274.38	408034.29	2016	30/06/2016	53508	Urbis	Axia 16 LED 350mA	19 Watts	6.00 Metres	Galvanised Steel	
Y	6	STREET LIGHTING	MEDWAY PLACE	GRIMSBY	525245.65	408036.25	2014		53509	Urbis	Axia 16 LED 350mA	19 Watts	6.00 Metres	Galvanised Steel	
Y	1	STREET LIGHTING	NORWICH AVENUE	GRIMSBY	525361.06	407758.46	2008		54280	1 Urbis LED	Teceo 24 LED 500mA	40 Watts	6.00 Metres	Steel	
Y	2	STREET LIGHTING	NORWICH AVENUE	GRIMSBY	525388.28	407760.11	1995		54281	1 Urbis LED	Teceo 24 LED 500mA	40 Watts	6.00 Metres	Galvanised Steel	
Y	3	STREET LIGHTING	NORWICH AVENUE	GRIMSBY	525361.82	407794.42	1995		54282	1 Urbis LED	Teceo 24 LED 500mA	40 Watts	6.00 Metres	Galvanised Steel	
Y	4	STREET LIGHTING	NORWICH AVENUE	GRIMSBY	525383.84	407795.18	1995		54283	1 Urbis LED	Teceo 24 LED 500mA	40 Watts	6.00 Metres	Galvanised Steel	
Y	5	STREET LIGHTING	NORWICH AVENUE	GRIMSBY	525379.54	407825.37	1995		61875	1 Urbis LED	Teceo 24 LED 500mA	40 Watts	6.00 Metres	Galvanised Steel	
Y	5	STREET LIGHTING	NORWICH AVENUE	GRIMSBY	525379.54	407825.37	1995		62407	1 Urbis LED	Teceo 24 LED 500mA	40 Watts	6.00 Metres	Galvanised Steel	
Y	6	STREET LIGHTING	NORWICH AVENUE	GRIMSBY	525389.66	407861.13	1995		61876	1 Urbis LED	Teceo 24 LED 500mA	40 Watts	6.00 Metres	Galvanised Steel	
Y	6	STREET LIGHTING	NORWICH AVENUE	GRIMSBY	525389.66	407861.13	1995		62408	1 Urbis LED	Teceo 24 LED 500mA	40 Watts	6.00 Metres	Galvanised Steel	
Y	7	STREET LIGHTING	NORWICH AVENUE	GRIMSBY	525399.92	407896.19	1995		61877	1 Urbis LED	Teceo 24 LED 500mA	40 Watts	6.00 Metres	Galvanised Steel	
Y	7	STREET LIGHTING	NORWICH AVENUE	GRIMSBY	525399.92	407896.19	1995		62409	1 Urbis LED	Teceo 24 LED 500mA	40 Watts	6.00 Metres	Galvanised Steel	
Y	1	STREET LIGHTING	WATFORD AVENUE	GRIMSBY	524858.06	408013.57	2001		59889	1 Urbis LED	Axia 16 LED 500mA	28 Watts	6.00 Metres	Steel	
Y	2	STREET LIGHTING	WATFORD AVENUE	GRIMSBY	524860.68	407978.69	2001		59890	1 Urbis LED	Axia 16 LED 500mA	28 Watts	6.00 Metres	Steel	
Y	3	STREET LIGHTING	WATFORD AVENUE	GRIMSBY	524852.91	407953.44	2001		59891	1 Urbis LED	Axia 16 LED 500mA	28 Watts	6.00 Metres	Steel	
Y	4	STREET LIGHTING	WATFORD AVENUE	GRIMSBY				30/05/2025	70217	Urbis	Axia 16 LED 500mA	28 Watts	6.00 Metres	Galvanised Steel	
Y	5	STREET LIGHTING	WATFORD AVENUE	GRIMSBY	524859.57	407890.84	2001		59893	1 Urbis LED	Axia 16 LED 500mA	28 Watts	6.00 Metres	Steel	
Y	6	STREET LIGHTING	WATFORD AVENUE	GRIMSBY	524856.55	407856.74	2001		59894	1 Urbis LED	Axia 16 LED 500mA	28 Watts	6.00 Metres	Steel	
Y	7	STREET LIGHTING	WATFORD AVENUE	GRIMSBY	524852.43	407823.02	2001		59895	1 Urbis LED	Axia 16 LED 500mA	28 Watts	6.00 Metres	Steel	
Y	8	STREET LIGHTING	WATFORD AVENUE	GRIMSBY	524849.65	407788.05	2001		59896	1 Urbis LED	Axia 16 LED 500mA	28 Watts	6.00 Metres	Steel	
Y	9	STREET LIGHTING	WATFORD AVENUE	GRIMSBY	524846.33	407756.39	2001		59897	1 Urbis LED	Axia 16 LED 500mA	28 Watts	6.00 Metres	Steel	
Y	10	STREET LIGHTING	WATFORD AVENUE	GRIMSBY	524826.4	407737.49	2001		59898	1 Urbis LED	Axia 16 LED 500mA	28 Watts	6.00 Metres	Steel	
Y	11	STREET LIGHTING	WATFORD AVENUE	GRIMSBY	524820.65	407757.49	2001		59899	1 Urbis LED	Axia 16 LED 500mA	28 Watts	6.00 Metres	Steel	
Y	12	STREET LIGHTING	FOOTPATH BETWEEN WATFORD	GRIMSBY	524791	407749	2001		48792	Urbis	Axia 8 LED 350mA	10 Watts	6.00 Metres	Galvanised Steel	
Y	1	STREET LIGHTING	WESTERN OUTWAY	GRIMSBY	525539.32	407970.54	2001		60368	1 Urbis LED	Axia 16 LED 500mA	28 Watts	6.00 Metres	Galvanised Steel	
Y	2	STREET LIGHTING	WESTERN OUTWAY	GRIMSBY	525534.71	407983.32	2001		60369	1 Urbis LED	Axia 16 LED 500mA	28 Watts	6.00 Metres	Galvanised Steel	
Y	3	STREET LIGHTING	WESTERN OUTWAY	GRIMSBY	525516.87	407961.59	2001		60370	1 Urbis LED	Axia 16 LED 500mA	28 Watts	6.00 Metres	Galvanised Steel	
Y	4	STREET LIGHTING	WESTERN OUTWAY	GRIMSBY	525512.21	407973.77	2001		60371	1 Urbis LED	Axia 16 LED 500mA	28 Watts	6.00 Metres	Galvanised Steel	
Y	5	STREET LIGHTING	WESTERN OUTWAY	GRIMSBY	525486.08	407949.5	2001		60372	1 Urbis LED	Axia 16 LED 500mA	28 Watts	6.00 Metres	Galvanised Steel	
Y	6	STREET LIGHTING	WESTERN OUTWAY	GRIMSBY	525457.75	407938.52	2001		60373	1 Urbis LED	Axia 16 LED 500mA	28 Watts	6.00 Metres	Galvanised Steel	
Y	7	STREET LIGHTING	WESTERN OUTWAY	GRIMSBY	525431.96	407929.03	2001		60374	1 Urbis LED	Axia 16 LED 500mA	28 Watts	6.00 Metres	Galvanised Steel	
Y	8	STREET LIGHTING	WESTERN OUTWAY	GRIMSBY	525417.54	407911.41	2001		60375	1 Urbis LED	Axia 16 LED 500mA	28 Watts	6.00 Metres	Galvanised Steel	
Y	9	STREET LIGHTING	WESTERN OUTWAY	GRIMSBY	525399.74	407942.65	2001		60376	1 Urbis LED	Axia 16 LED 500mA	28 Watts	6.00 Metres	Galvanised Steel	

Y	10	STREET LIGHTING	WESTERN OUTWAY	GRIMSBY	525380.69	407920.82	2001		60377	1 Urbis LED	Axia 16 LED 500mA	28 Watts	6.00 Metres	Galvanised Steel	
Y	11	STREET LIGHTING	WESTERN OUTWAY	GRIMSBY	525358.38	407897.68	2001		60378	1 Urbis LED	Axia 16 LED 500mA	28 Watts	6.00 Metres	Galvanised Steel	
Y	12	STREET LIGHTING	WESTERN OUTWAY	GRIMSBY	525354.68	407910.63	2001		60379	1 Urbis LED	Axia 16 LED 500mA	28 Watts	6.00 Metres	Galvanised Steel	
Y	13	STREET LIGHTING	WESTERN OUTWAY	GRIMSBY	525333.74	407882.58	2022	07/03/2022	68833	Urbis	Axia 24 LED 500mA	28 Watts	6.00 Metres	Galvanised Steel	
Y	14	STREET LIGHTING	WESTERN OUTWAY	GRIMSBY	525320.12	407897.21	2001		60381	1 Urbis LED	Axia 16 LED 500mA	28 Watts	6.00 Metres	Galvanised Steel	
Y	15	STREET LIGHTING	WESTERN OUTWAY	GRIMSBY	525289.99	407884.62	2001		60382	1 Urbis LED	Axia 16 LED 500mA	28 Watts	6.00 Metres	Galvanised Steel	
Y	16	STREET LIGHTING	WESTERN OUTWAY	GRIMSBY	525294.44	407862.06	2001		60383	1 Urbis LED	Axia 16 LED 500mA	28 Watts	6.00 Metres	Galvanised Steel	
Y	17	STREET LIGHTING	WESTERN OUTWAY	GRIMSBY	525267.57	407853.11	2001		60384	1 Urbis LED	Axia 16 LED 500mA	28 Watts	6.00 Metres	Galvanised Steel	
Y	18	STREET LIGHTING	WESTERN OUTWAY	GRIMSBY	525262.13	407874.4	2001		60385	Urbis	Axia 16 LED 350mA	19 Watts	6.00 Metres	Galvanised Steel	
Y	19	STREET LIGHTING	WESTERN OUTWAY	GRIMSBY	525231.1	407863.93	2001		60386	1 Urbis LED	Axia 16 LED 500mA	28 Watts	6.00 Metres	Galvanised Steel	
Y	20	STREET LIGHTING	WESTERN OUTWAY	GRIMSBY	525230.22	407843.91	2001		60387	1 Urbis LED	Axia 16 LED 500mA	28 Watts	6.00 Metres	Galvanised Steel	
Y	21	STREET LIGHTING	WESTERN OUTWAY	GRIMSBY	525203.17	407852.41	2001		60388	1 Urbis LED	Axia 16 LED 500mA	28 Watts	6.00 Metres	Galvanised Steel	
Y	22	STREET LIGHTING	WESTERN OUTWAY	GRIMSBY	525170.17	407827.11	2001		60389	1 Urbis LED	Axia 16 LED 500mA	28 Watts	6.00 Metres	Galvanised Steel	
Y	1	STREET LIGHTING	WINSLOW GROVE	GRIMSBY	524882.85	407969.32	2019	14/10/2019	67622	Urbis	Axia 16 LED 350mA	19 Watts	6.00 Metres	Galvanised Steel	
Y	2	STREET LIGHTING	WINSLOW GROVE	GRIMSBY	524909.22	407961.66	2019	14/10/2019	67814	Urbis	Axia 16 LED 350mA	19 Watts	6.00 Metres	Galvanised Steel	
Y	1	STREET LIGHTING	WIRRAL AVENUE	GRIMSBY	524779.72	407833.12	2001		60997	Urbis	Axia 16 LED 350mA	19 Watts	5.00 Metres	Steel	
Y	2	STREET LIGHTING	WIRRAL AVENUE	GRIMSBY	524809.27	407830.26	2001		60998	Urbis	Axia 16 LED 350mA	19 Watts	5.00 Metres	Steel	
Y	3	STREET LIGHTING	WIRRAL AVENUE	GRIMSBY	524837.03	407819.88	2019	15/05/2019	67382	Urbis	Axia 16 LED 350mA	19 Watts	6.00 Metres	Galvanised Steel	
Y	1	STREET LIGHTING	WORCESTER AVENUE	GRIMSBY	525153.78	407738.98	2019	03/10/2019	67578	Urbis	Teceo 32 LED 500mA	52 Watts	8.00 Metres	Galvanised Steel	
Y	2	STREET LIGHTING	WORCESTER AVENUE	GRIMSBY	525162.89	407761.21	1974		61192	1 Urbis LED	Teceo 32 LED 500mA	52 Watts	8.00 Metres	Galvanised Steel	
Y	3	STREET LIGHTING	WORCESTER AVENUE	GRIMSBY	525147.51	407781.31	2024	12/01/2024	69790	Urbis	Teceo 32 LED 500mA	52 Watts	8.00 Metres	Galvanised Steel	
Y	4	STREET LIGHTING	WORCESTER AVENUE	GRIMSBY	525164	407797.58	2020	16/10/2020	68134	Urbis	Teceo 32 LED 500mA	52 Watts	8.00 Metres	Galvanised Steel	
Y	5	STREET LIGHTING	WORCESTER AVENUE	GRIMSBY	525147.61	407812.4	1974		61195	1 Urbis LED	Teceo 32 LED 500mA	52 Watts	8.00 Metres	Galvanised Steel	
Y	6	STREET LIGHTING	WORCESTER AVENUE	GRIMSBY	525150	407836	1974		61196	1 Urbis LED	Teceo 32 LED 500mA	52 Watts	8.00 Metres	Galvanised Steel	
Y	7	STREET LIGHTING	WORCESTER AVENUE	GRIMSBY	525145.84	407842.28	2001		61197	Urbis	Axia 8 LED 350mA	10 Watts	6.00 Metres	Galvanised Steel	
Y	8	STREET LIGHTING	WORCESTER AVENUE	GRIMSBY	525143.58	407866.65	2001		61198	Urbis	Axia 8 LED 350mA	10 Watts	6.00 Metres	Galvanised Steel	
Y	9	STREET LIGHTING	WORCESTER AVENUE	GRIMSBY	525165.47	407861.38	1974		61199	1 Urbis LED	Teceo 32 LED 500mA	52 Watts	8.00 Metres	Galvanised Steel	
Y	10	STREET LIGHTING	WORCESTER AVENUE	GRIMSBY	525183.33	407865.24	1974		61200	Urbis	Axia 8 LED 350mA	10 Watts	6.00 Metres	Galvanised Steel	
Y	11	STREET LIGHTING	WORCESTER AVENUE	GRIMSBY	525149.98	407886.15	2001		61201	Urbis	Axia 8 LED 350mA	10 Watts	6.00 Metres	Galvanised Steel	
Y	12	STREET LIGHTING	WORCESTER AVENUE	GRIMSBY	525170.44	407887.61	1974		61202	1 Urbis LED	Teceo 32 LED 500mA	52 Watts	8.00 Metres	Galvanised Steel	
Y	13	STREET LIGHTING	WORCESTER AVENUE	GRIMSBY	525175.96	407921.95	1974		61203	1 Urbis LED	Teceo 32 LED 500mA	52 Watts	8.00 Metres	Galvanised Steel	
Y	14	STREET LIGHTING	WORCESTER AVENUE	GRIMSBY	525181.48	407953.34	1974		61204	1 Urbis LED	Teceo 32 LED 500mA	52 Watts	8.00 Metres	Galvanised Steel	
Y	15	STREET LIGHTING	WORCESTER AVENUE	GRIMSBY	525186.27	407983.08	1974		61205	1 Urbis LED	Teceo 32 LED 500mA	52 Watts	8.00 Metres	Galvanised Steel	
Y	16	STREET LIGHTING	WORCESTER AVENUE	GRIMSBY	525193.14	408015.99	2024	30/08/2024	69976	Urbis	Teceo 32 LED 500mA	52 Watts	8.00 Metres	Galvanised Steel	
Y	17	STREET LIGHTING	WORCESTER AVENUE	GRIMSBY	525198.05	408046.74			69977						
Y	18	STREET LIGHTING	WORCESTER AVENUE	GRIMSBY	525202.47	408072.47	1974		61208	1 Urbis LED	Teceo 32 LED 500mA	52 Watts	8.00 Metres	Galvanised Steel	
Y	19	STREET LIGHTING	WORCESTER AVENUE	GRIMSBY	525225.6	408073	2010		61209	Urbis	Axia 8 LED 350mA	10 Watts	6.00 Metres	Steel	
Y	20	STREET LIGHTING	WORCESTER AVENUE	GRIMSBY	525178.57	408089.44	2001		61210	Urbis	Axia 8 LED 350mA	10 Watts	5.00 Metres	Steel	
Y	21	STREET LIGHTING	WORCESTER AVENUE	GRIMSBY	525207.08	408102.66	2013		61959	1 Urbis LED	Teceo 32 LED 500mA	52 Watts	8.00 Metres	Galvanised Steel	
Y	21	STREET LIGHTING	WORCESTER AVENUE	GRIMSBY	525207.08	408102.66	2013	25/09/2013	62508	1 Urbis LED	Teceo 32 LED 500mA	52 Watts	8.00 Metres	Galvanised Steel	
Y	22	STREET LIGHTING	WORCESTER AVENUE	GRIMSBY	525230.27	408099.73	2010		61211	Urbis	Axia 8 LED 350mA	10 Watts	6.00 Metres	Steel	
Y	23	STREET LIGHTING	WORCESTER AVENUE	GRIMSBY	525181.89	408110.29	2001		61212	Urbis	Axia 8 LED 350mA	10 Watts	5.00 Metres	Steel	
Y	24	STREET LIGHTING	WORCESTER AVENUE	GRIMSBY	525184.38	408126	2001		61213	Urbis	Axia 8 LED 350mA	10 Watts	5.00 Metres	Steel	
Y	25	STREET LIGHTING	WORCESTER AVENUE	GRIMSBY	525234.38	408125.62	2010		61214	Urbis	Axia 8 LED 350mA	10 Watts	6.00 Metres	Steel	
Y	26	STREET LIGHTING	WORCESTER AVENUE	GRIMSBY	525212.05	408131.11	1974		61215	1 Urbis LED	Teceo 32 LED 500mA	52 Watts	8.00 Metres	Galvanised Steel	
Y	27	STREET LIGHTING	WORCESTER AVENUE	GRIMSBY	525215.54	408157.16	1974		61216	1 Urbis LED	Teceo 32 LED 500mA	52 Watts	8.00 Metres	Galvanised Steel	
Y	28	STREET LIGHTING	WORCESTER AVENUE	GRIMSBY	525226.62	408172.89	2019	03/10/2019	67579	Urbis	Teceo 32 LED 500mA	52 Watts	8.00 Metres	Galvanised Steel	
Y	1	STREET LIGHTING	CONINGSBY DRIVE	GRIMSBY	525377.53	407994.03	1986		46502	Urbis	Axia 8 LED 350mA	10 Watts	5.00 Metres	Galvanised Steel	
Y	2	STREET LIGHTING	CONINGSBY DRIVE	GRIMSBY	525367.28	408020.16	1986		46503	Urbis	Axia 16 LED 350mA	19 Watts	5.00 Metres	Galvanised Steel	
Y	3	STREET LIGHTING	CONINGSBY DRIVE	GRIMSBY	525355.89	408045.42	1986		46504	Urbis	Axia 16 LED 350mA	19 Watts	5.00 Metres	Galvanised Steel	
Y	4	STREET LIGHTING	CONINGSBY DRIVE	GRIMSBY	525378.8	408059.98	1986		46505	Urbis	Axia 16 LED 350mA	19 Watts	5.00 Metres	Galvanised Steel	
Y	5	STREET LIGHTING	CONINGSBY DRIVE	GRIMSBY	525363.23	408055.04	1986		46506	Urbis	Axia 16 LED 350mA	19 Watts	5.00 Metres	Galvanised Steel	
Y	6	STREET LIGHTING	CONINGSBY DRIVE	GRIMSBY	525345.63	408051.68	1986		46507	Urbis	Axia 16 LED 350mA	19 Watts	5.00 Metres	Galvanised Steel	
Y	7	STREET LIGHTING	CONINGSBY DRIVE	GRIMSBY	525320.7	408044.47	1986		46508	Urbis	Axia 16 LED 350mA	19 Watts	5.00 Metres	Galvanised Steel	
Y	8	STREET LIGHTING	CONINGSBY DRIVE	GRIMSBY	525357.15	408083.2	1986		46509	Urbis	Axia 8 LED 350mA	10 Watts	5.00 Metres	Galvanised Steel	
Y	9	STREET LIGHTING	CONINGSBY DRIVE	GRIMSBY	525351.97	408077.76	1986		46510	Urbis	Axia 16 LED 350mA	19 Watts	5.00 Metres	Galvanised Steel	
Y	10	STREET LIGHTING	CONINGSBY DRIVE	GRIMSBY	525345	408104.28	1986		46511	Urbis	Axia 16 LED 350mA	19 Watts	5.00 Metres	Galvanised Steel	
Y	11	STREET LIGHTING	CONINGSBY DRIVE	GRIMSBY	525352.22	408130.99	1986		46512	Urbis	Axia 16 LED 350mA	19 Watts	5.00 Metres	Galvanised Steel	
Y	12	STREET LIGHTING	CONINGSBY DRIVE	GRIMSBY	525337.66	408137.83	1986		46513	Urbis	Axia 16 LED 350mA	19 Watts	5.00 Metres	Galvanised Steel	
Y	13	STREET LIGHTING	CONINGSBY DRIVE	GRIMSBY	525336.67	408127.64	2019	03/10/2019	67575	Urbis	Axia 16 LED 350mA	19 Watts	6.00 Metres	Galvanised Steel	
Y	1	STREET LIGHTING	SCAMPTON CLOSE	GRIMSBY	525319.29	408180.27	1987		56638	Urbis	Axia 16 LED 350mA	19 Watts	5.00 Metres	Galvanised Steel	
Y	2	STREET LIGHTING	SCAMPTON CLOSE	GRIMSBY	525328.15	408149.19	1987		56639	Urbis	Axia 16 LED 350mA	19 Watts	6.00 Metres	Galvanised Steel	
Y	1	STREET LIGHTING	CHELMSFORD AVENUE	GRIMSBY	525449.96	408793.82	2024	25/06/2024	45726	1 Urbis LED	Teceo 48 LED 700mA	104 Watts	8.00 Metres	Galvanised Steel	
Y	2	STREET LIGHTING	CHELMSFORD AVENUE	GRIMSBY	525467.96	408761.61		08/07/2024	70155	1 Urbis LED	Teceo 48 LED 700mA	104 Watts	8.00 Metres	Galvanised Steel	
Y	3	STREET LIGHTING	CHELMSFORD AVENUE	GRIMSBY	525477.47	408726.48		08/07/2024	70156	1 Urbis LED	Teceo 48 LED 700mA	104 Watts	8.00 Metres	Galvanised Steel	
Y	4	STREET LIGHTING	CHELMSFORD AVENUE	GRIMSBY	525477.88	408678.02		08/07/2024	70157	1 Urbis LED	Teceo 48 LED 700mA	104 Watts	8.00 Metres	Galvanised Steel	
Y	5	STREET LIGHTING	CHELMSFORD AVENUE	GRIMSBY	525461.1	408639.1		08/07/2024	70158	1 Urbis LED	Teceo 48 LED 700mA	104 Watts	8.00 Metres	Galvanised Steel	
Y	6	STREET LIGHTING	CHELMSFORD AVENUE	GRIMSBY	525464.13	408596.51		08/07/2024	70159	1 Urbis LED	Teceo 48 LED 700mA	104 Watts	8.00 Metres	Galvanised Steel	
Y	7	STREET LIGHTING	CHELMSFORD AVENUE	GRIMSBY	525443.75	408553.04		08/07/2024	70160	1 Urbis LED	Teceo 48 LED 700mA	104 Watts	8.00 Metres	Galvanised Steel	
Y	8	STREET LIGHTING	CHELMSFORD AVENUE	GRIMSBY	525457.12	408513.47	2019	15/11/2019	67581	Urbis	Teceo 48 LED 500mA	79 Watts	8.00 Metres	Galvanised Steel	
Y	9	STREET LIGHTING	CHELMSFORD AVENUE	GRIMSBY	525444.94	408469.32		08/07/2024	70161	1 Urbis LED	Teceo 48 LED 700mA	104 Watts	8.00 Metres	Galvanised Steel	
Y	10	STREET LIGHTING	CHELMSFORD AVENUE	GRIMSBY	525459.21	408438.08		08/07/2024	70162	1 Urbis LED	Teceo 48 LED 700mA	104 Watts	8.00 Metres	Galvanised Steel	
Y	11	STREET LIGHTING	CHELMSFORD AVENUE	GRIMSBY	525446.58	408399	1996	01/12/1996	45736	1 Urbis LED	Teceo 48 LED 700mA	104 Watts	10.00 Metres	Galvanised Steel	
Y	12	STREET LIGHTING	CHELMSFORD AVENUE	GRIMSBY	525460.26	408374.78	2019	14/01/2019	45737	Urbis	Ampera 48 LED 700mA	104 Watts	12.00 Metres	Galvanised Steel	
Y	13	STREET LIGHTING	CHELMSFORD AVENUE	GRIMSBY	525477.93	408343.21	2019	13/11/2019	67582	Urbis	Teceo 48 LED 700mA	104 Watts	8.00 Metres	Galvanised Steel	
Y	14	STREET LIGHTING	CHELMSFORD AVENUE	GRIMSBY	525455.7	408313.72		08/07/2024	70163	1 Urbis LED	Teceo 48 LED 700mA	104 Watts	8.00 Metres	Galvanised Steel	
Y	15	STREET LIGHTING	CHELMSFORD AVENUE	GRIMSBY	525462.94	408287.9	2023	01/12/2023	45740	1 Urbis LED	Teceo 48 LED 700mA	104 Watts	8.00 Metres	Stainless Steel	
Y	16	STREET LIGHTING	CHELMSFORD AVENUE	GRIMSBY	525489.5	408248.71	2019	15/11/2019	67583	Urbis	Teceo 48 LED 500mA	79 Watts	8.00 Metres	Galvanised Steel	
Y	17	STREET LIGHTING	CHELMSFORD AVENUE	GRIMSBY	525485.46	408208.99	2004	01/12/2004	45742	1 Urbis LED	Teceo 48 LED 700mA	104 Watts	8.00 Metres	Stainless Steel	
Y	18	STREET LIGHTING	CHELMSFORD AVENUE	GRIMSBY	525506.78	408181.76		08/07/2024	70164	1 Urbis LED	Teceo 48 LED 700mA	104 Watts	8.00 Metres	Galvanised Steel	
Y	19	STREET LIGHTING	CHELMSFORD AVENUE	GRIMSBY	525517.68	408145.95		08/07/2024	70165	1 Urbis LED	Teceo 48 LED 700mA	104 Watts	8.00 Metres	Galvanised Steel	
Y	20	STREET LIGHTING	CHELMSFORD AVENUE	GRIMSBY	525510.97	408117.36		08/07/2024	70166	1 Urbis LED	Teceo 48 LED 700mA	104 Watts	8.00 Metres	Galvanised Steel	
Y	21	STREET LIGHTING	CHELMSFORD AVENUE	GRIMSBY	525534.02	408080.02		08/07/2024	70167	1 Urbis LED	Teceo 48 LED 700mA	104 Watts	8.00 Metres	Galvanised Steel	
Y	22	STREET LIGHTING	CHELMSFORD AVENUE	GRIMSBY	525545.4	408039.76		08/07/2024	70168	1 Urbis LED	Teceo 48 LED 700mA	104 Watts	8.00 Metres	Galvanised Steel	
Y	23	STREET LIGHTING	CHELMSFORD AVENUE	GRIMSBY	525541.14	408000.69	2019	15/11/2019	67584	Urbis	Teceo 48 LED 700mA	104 Watts	8.00 Metres	Galvanised Steel	
Y	24	STREET LIGHTING	CHELMSFORD AVENUE	GRIMSBY	525559.37	407983.05	2019	15/11/2019	67585	Urbis	Teceo 48 LED 700mA	104 Watts	8.00 Metres	Galvanised Steel	
Y	25	STREET LIGHTING	CHELMSFORD AVENUE	GRIMSBY	525559.82	407937.53		08/07/2024	70169	1 Urbis LED	Teceo 48 LED 700mA	104 Watts	8.00 Metres	Galvanised Steel	
Y	26	STREET LIGHTING	CHELMSFORD AVENUE	GRIMSBY	525581.02	407913.85	2019	15/11/2019	67580	Urbis	Teceo 48 LED 500mA	79 Watts	8.00 Metres	Galvanised Steel	
Y	27	STREET LIGHTING	CHELMSFORD AVENUE	GRIMSBY	525578.73	407862.62		08/07/2024	70170	1 Urbis LED	Teceo 48 LED 700mA	104 Watts	8.00 Metres	Galvanised Steel	
Y	28	STREET LIGHTING	CHELMSFORD AVENUE	GRIMSBY	525601	407826.09		08/07/2024	70171	1 Urbis LED	Teceo 48 LED 700mA	104 Watts	8.00 Metres	Galvanised Steel	
Y	29	STREET LIGHTING	CHELMSFORD AVENUE	GRIMSBY	525596.47	407792.8		08/07/2024	70172	1 Urbis LED	Teceo 48 LED 700mA	104 Watts	8.00 Metres	Galvanised Steel	
Y	1	STREET LIGHTING	KELSTERN COURT	GRIMSBY	525138.36	408251.05	1993		51516	Urbis	Axia 16 LED 350mA	19 Watts	6.00 Metres	Galvanised Steel	
Y	2	STREET LIGHTING	KELSTERN COURT	GRIMSBY	525151.99	408243.5	1993		51517	Urbis	Axia 16 LED 350mA	19 Watts	6.00 Metres	Galvanised Steel	
Y	3	STREET LIGHTING	KELSTERN COURT	GRIMSBY	525154.57	408259.7	2021	25/01/2021	68233	Urbis	Axia 24 LED 500mA	28 Watts	6.00 Metres	Galvanised Steel	
Y	1	STREET LIGHTING	WADDINGTON PLACE	GRIMSBY	525330.83	408101.12	1985		59675	Urbis	Axia 16 LED 350mA	19 Watts	5.00 Metres	Galvanised Steel	
Y	2	STREET LIGHTING	WADDINGTON PLACE	GRIMSBY	525305.64	408087.07	1985		59676	Urbis	Axia 16 LED 350mA	19 Watts	5.00 Metres	Galvanised Steel	
Y	3	STREET LIGHTING	WADDINGTON PLACE	GRIMSBY	525321.21	408121.56	1985		59677	Urbis	Axia 16 LED 350mA	19 Watts	5.00 Metres	Galvanised Steel	
Y	4	STREET LIGHTING	WADDINGTON PLACE	GRIMSBY	525309.44	408130.93	1985		59678	Urbis	Axia 16 LED 350mA	19 Watts	5.00 Metres	Galvanised Steel	
Y	5	STREET LIGHTING	WADDINGTON PLACE	GRIMSBY	525279.94	408124.85	1985		59679	Urbis	Axia 16 LED 350mA	19 Watts	5.00 Metres	Galvanised Steel	
Y	6	STREET LIGHTING	WADDINGTON PLACE	GRIMSBY	525267.92	408130.87	1985		59680	Urbis	Axia 16 LED 350mA	19 Watts	5.00 Metres	Galvanised Steel	
Y	7	STREET LIGHTING	WADDINGTON PLACE	GRIMSBY	525261.46	408099.41	1985		59681	Urbis	Axia 16 LED 350mA	19 Watts	5.00 Metres	Galvanised Steel	
Y	8	STREET LIGHTING	WADDINGTON PLACE	GRIMSBY	525267.16	408076.12	1985		59682	Urbis	Axia 16 LED 350mA	19 Watts	5.00 Metres	Galvanised Steel	
Y	1	STREET LIGHTING	SWINDERBY GARDENS	GRIMSBY	525217.88	408204.74	2019	11/02/2019	67278	Urbis	Axia 16 LED 500mA	28 Watts	6.00 Metres	Galvanised Steel	
Y	2	STREET LIGHTING	SWINDERBY GARDENS	GRIMSBY	525221.84	408228.09	1996		58707	1 Urbis LED	Axia 16 LED 500mA	28 Watts	5.00 Metres	Galvanised Steel	
Y	3	STREET LIGHTING	SWINDERBY GARDENS	GRIMSBY	525218.8	408237.33	1996		58708	1 Urbis LED	Axia 16 LED 500mA	28 Watts	5.00 Metres	Galvanised Steel	
Y	4	STREET LIGHTING	SWINDERBY GARDENS	GRIMSBY	525238.42	408234.3	2013		58709	1 Urbis LED	Axia 16 LED 500mA	28 Watts	6.00 Metres	Galvanised Steel	
Y	1	STREET LIGHTING	DIGBY GARDENS	GRIMSBY	525308.35	408200.81	1995		47469	1 Urbis LED	Axia 16 LED 500mA	28 Watts	5.00 Metres	Galvanised Steel	
Y	2	STREET LIGHTING	DIGBY GARDENS	GRIMSBY	525303.92	408222.07	1995		47470	1 Urbis LED	Axia 16 LED 500mA	28 Watts	5.00 Metres	Galvanised Steel	
Y	3	STREET LIGHTING	DIGBY GARDENS	GRIMSBY	525301.39	408232.33	1995		47471	1 Urbis LED	Axia 16 LED 500mA	28 Watts	5.00 Metres	Galvanised Steel	
Y	4	STREET LIGHTING	DIGBY GARDENS	GRIMSBY	525321.39	408238.28	1995		47472	1 Urbis LED	Axia 16 LED 500mA	28 Watts	5.00 Metres	Galvanised Steel	

Y	1	STREET LIGHTING	WICKENBY CLOSE	GRIMSBY	524866.28	407883.92	1998		60674	Urbis	Axia 16 LED 350mA	19 Watts	5.00 Metres	Galvanised Steel	
Y	2	STREET LIGHTING	WICKENBY CLOSE	GRIMSBY	524894.01	407890.06	1998		60675	Urbis	Axia 16 LED 350mA	19 Watts	5.00 Metres	Galvanised Steel	
Y	3	STREET LIGHTING	WICKENBY CLOSE	GRIMSBY	524888.31	407866.58	1998		60676	Urbis	Axia 16 LED 350mA	19 Watts	5.00 Metres	Galvanised Steel	
Y	1	STREET LIGHTING	FISKERTON CLOSE	GRIMSBY	524857.42	407809.11	1998		48628	1 Urbis LED	Axia 16 LED 500mA	28 Watts	5.00 Metres	Galvanised Steel	
Y	2	STREET LIGHTING	FISKERTON CLOSE	GRIMSBY	524878.94	407801.14	1998		48629	1 Urbis LED	Axia 16 LED 500mA	28 Watts	5.00 Metres	Galvanised Steel	
Y	3	STREET LIGHTING	FISKERTON CLOSE	GRIMSBY	524882.11	407819.17	1998		48630	1 Urbis LED	Axia 16 LED 500mA	28 Watts	5.00 Metres	Galvanised Steel	
Y	1	STREET LIGHTING	FISKERTON WAY	GRIMSBY	524362.98	411127.19	1997		48631	1 Urbis LED	Teceo 32 LED 500mA	52 Watts	8.00 Metres	Galvanised Steel	
Y	2	STREET LIGHTING	FISKERTON WAY	GRIMSBY	524369.05	411159.6	1997		48632	1 Urbis LED	Teceo 32 LED 500mA	52 Watts	8.00 Metres	Galvanised Steel	
Y	3	STREET LIGHTING	FISKERTON WAY	GRIMSBY	524390.07	411188.59	1997		48633	1 Urbis LED	Teceo 32 LED 500mA	52 Watts	8.00 Metres	Galvanised Steel	
Y	4	STREET LIGHTING	FISKERTON WAY	GRIMSBY	524390.07	411213.14	1997		48634	1 Urbis LED	Teceo 32 LED 500mA	52 Watts	8.00 Metres	Galvanised Steel	
Y	5	STREET LIGHTING	FISKERTON WAY	GRIMSBY	524419.94	411190.61	1997		48635	1 Urbis LED	Teceo 32 LED 500mA	52 Watts	8.00 Metres	Galvanised Steel	
Y	1	STREET LIGHTING	HIBALDSTOW CLOSE	GRIMSBY	524856.03	407767.21	1998		50667	1 Urbis LED	Axia 16 LED 500mA	28 Watts	5.00 Metres	Galvanised Steel	
Y	2	STREET LIGHTING	HIBALDSTOW CLOSE	GRIMSBY	524883.24	407763.79	1998		50668	1 Urbis LED	Axia 16 LED 500mA	28 Watts	5.00 Metres	Galvanised Steel	
Y	3	STREET LIGHTING	HIBALDSTOW CLOSE	GRIMSBY	524881.85	407749.55	1998		50669	1 Urbis LED	Axia 16 LED 500mA	28 Watts	5.00 Metres	Galvanised Steel	
Y	1	STREET LIGHTING	ALDER VIEW	GRIMSBY	524973	407370.1	1996		42926	Urbis	Axia 16 LED 350mA	19 Watts	5.00 Metres	Galvanised Steel	
Y	2	STREET LIGHTING	ALDER VIEW	GRIMSBY	524972.49	407395.42	1996		42927	Urbis	Axia 16 LED 350mA	19 Watts	5.00 Metres	Galvanised Steel	
Y	3	STREET LIGHTING	ALDER VIEW	GRIMSBY	524972.11	407414.28	1996		42928	Urbis	Axia 16 LED 350mA	19 Watts	5.00 Metres	Galvanised Steel	
Y	4	STREET LIGHTING	ALDER VIEW	GRIMSBY	524975.4	407431.3	1996		42929	Urbis	Axia 8 LED 350mA	10 Watts	5.00 Metres	Galvanised Steel	
Y	5	STREET LIGHTING	ALDER VIEW	GRIMSBY	524953.38	407451.55	1996		42930	Urbis	Axia 8 LED 350mA	10 Watts	5.00 Metres	Galvanised Steel	
Y	6	STREET LIGHTING	ALDER VIEW	GRIMSBY	524944.01	407428.14	1996		42931	Urbis	Axia 16 LED 350mA	19 Watts	5.00 Metres	Galvanised Steel	
Y	7	STREET LIGHTING	ALDER VIEW	GRIMSBY	524917.43	407426.62	1996		42932	Urbis	Axia 8 LED 350mA	10 Watts	5.00 Metres	Galvanised Steel	
Y	8	STREET LIGHTING	ALDER VIEW	GRIMSBY	524906.67	407430.03	1996		42933	Urbis	Axia 8 LED 350mA	10 Watts	5.00 Metres	Galvanised Steel	
Y	9	STREET LIGHTING	ALDER VIEW	GRIMSBY	524896.54	407447.5	1996		42934	Urbis	Axia 16 LED 350mA	19 Watts	5.00 Metres	Galvanised Steel	
Y	10	STREET LIGHTING	ALDER VIEW	GRIMSBY	524911.6	407408.07	1996		42935	Urbis	Axia 8 LED 350mA	10 Watts	5.00 Metres	Galvanised Steel	
Y	11	STREET LIGHTING	ALDER VIEW	GRIMSBY	524911.73	407393.07	1996		42936	Urbis	Axia 8 LED 350mA	10 Watts	5.00 Metres	Galvanised Steel	
Y	12	STREET LIGHTING	ALDER VIEW	GRIMSBY	524933	407391.93	1996		42937	Urbis	Axia 8 LED 350mA	10 Watts	5.00 Metres	Galvanised Steel	
Y	13	STREET LIGHTING	ALDER VIEW	GRIMSBY	524919.83	407413.64	1996		42938	Urbis	Axia 8 LED 350mA	10 Watts	5.00 Metres	Galvanised Steel	
Y	14	STREET LIGHTING	ALDER VIEW	GRIMSBY	524947.68	407414.4	1996		42939	Urbis	Axia 16 LED 350mA	19 Watts	5.00 Metres	Galvanised Steel	
Y	15	STREET LIGHTING	ALDER VIEW	GRIMSBY	524953.25	407403.77	1996		42940	Urbis	Axia 16 LED 350mA	19 Watts	5.00 Metres	Galvanised Steel	
Y	16	STREET LIGHTING	ALDER VIEW	GRIMSBY	524953.76	407378.96	1996		42941	Urbis	Axia 16 LED 350mA	19 Watts	5.00 Metres	Galvanised Steel	
Y	1	STREET LIGHTING	AMCOTTS ROAD	GRIMSBY	525359.95	407011.47	1995		43131	Urbis	Axia 8 LED 350mA	10 Watts	6.00 Metres	Galvanised Steel	
Y	2	STREET LIGHTING	AMCOTTS ROAD	GRIMSBY	525340.2	406997.1	1995		43132	Urbis	Axia 8 LED 350mA	10 Watts	6.00 Metres	Galvanised Steel	
Y	3	STREET LIGHTING	AMCOTTS ROAD	GRIMSBY	525342.86	406969.7	1995		43133	Urbis	Axia 8 LED 350mA	10 Watts	6.00 Metres	Galvanised Steel	
Y	4	STREET LIGHTING	AMCOTTS ROAD	GRIMSBY	525338.93	406946.79	1995		43134	Urbis	Axia 8 LED 350mA	10 Watts	6.00 Metres	Galvanised Steel	
Y	5	STREET LIGHTING	AMCOTTS ROAD	GRIMSBY	525328.05	406924.76	1995		43135	Urbis	Axia 8 LED 350mA	10 Watts	6.00 Metres	Galvanised Steel	
Y	1	STREET LIGHTING	BEECHWOOD AVENUE	GRIMSBY	524987.47	407111.71	2007		43909	1 Urbis LED	Teceo 24 LED 500mA	40 Watts	6.00 Metres	Stainless Steel	
Y	2	STREET LIGHTING	BEECHWOOD AVENUE	GRIMSBY	524979.62	407149.82	1996		43910	1 Urbis LED	Teceo 24 LED 500mA	40 Watts	6.00 Metres	Galvanised Steel	
Y	3	STREET LIGHTING	BEECHWOOD AVENUE	GRIMSBY	524988.82	407172.65	1996		43911	1 Urbis LED	Teceo 24 LED 500mA	40 Watts	6.00 Metres	Galvanised Steel	
Y	4	STREET LIGHTING	BEECHWOOD AVENUE	GRIMSBY	525009.96	407168.73	1996		43912	Urbis	Axia 8 LED 350mA	10 Watts	6.00 Metres	Galvanised Steel	
Y	5	STREET LIGHTING	BEECHWOOD AVENUE	GRIMSBY	525003.76	407198.54	1996		43913	1 Urbis LED	Teceo 24 LED 500mA	40 Watts	6.00 Metres	Galvanised Steel	
Y	6	STREET LIGHTING	BEECHWOOD AVENUE	GRIMSBY	524981.36	407201.38	1996		43914	1 Urbis LED	Teceo 24 LED 500mA	40 Watts	6.00 Metres	Galvanised Steel	
Y	7	STREET LIGHTING	BEECHWOOD AVENUE	GRIMSBY	524987.68	407230.75	1996		43915	1 Urbis LED	Teceo 24 LED 500mA	40 Watts	6.00 Metres	Galvanised Steel	
Y	8	STREET LIGHTING	BEECHWOOD AVENUE	GRIMSBY	524970.34	407257.39	1996		43916	1 Urbis LED	Teceo 24 LED 500mA	40 Watts	6.00 Metres	Galvanised Steel	
Y	9	STREET LIGHTING	BEECHWOOD AVENUE	GRIMSBY	524978.82	407289.1	1996		43917	1 Urbis LED	Teceo 24 LED 500mA	40 Watts	6.00 Metres	Galvanised Steel	
Y	10	STREET LIGHTING	BEECHWOOD AVENUE	GRIMSBY	524965.02	407314.16	1996		43918	1 Urbis LED	Teceo 24 LED 500mA	40 Watts	6.00 Metres	Galvanised Steel	
Y	11	STREET LIGHTING	BEECHWOOD AVENUE	GRIMSBY	524961.99	407341.31	1996		43919	1 Urbis LED	Teceo 24 LED 500mA	40 Watts	6.00 Metres	Galvanised Steel	
Y	12	STREET LIGHTING	BEECHWOOD AVENUE	GRIMSBY	524984.39	407361.5	1996		43920	1 Urbis LED	Teceo 24 LED 500mA	40 Watts	6.00 Metres	Stainless Steel	
Y	13	STREET LIGHTING	BEECHWOOD AVENUE	GRIMSBY	525017.17	407354.09	1996		43921	1 Urbis LED	Teceo 24 LED 500mA	40 Watts	6.00 Metres	Galvanised Steel	
Y	1	STREET LIGHTING	FRANKLIN HOUSE CAR PARK	GRIMSBY	525000	407110	2000		48926	1 Urbis LED	Axia 16 LED 500mA	28 Watts	6.00 Metres	Galvanised Steel	
Y	2	STREET LIGHTING	FRANKLIN HOUSE CAR PARK	GRIMSBY	525054.38	407101.04	2000		48927	1 Urbis LED	Axia 16 LED 500mA	28 Watts	6.00 Metres	Galvanised Steel	
Y	1	STREET LIGHTING	BELTON GROVE	GRIMSBY	525051.99	407345.44	1990		43984	1 Urbis LED	Axia 16 LED 500mA	28 Watts	6.00 Metres	Galvanised Steel	
Y	2	STREET LIGHTING	BELTON GROVE	GRIMSBY	525063.63	407341.65	1990		43985	1 Urbis LED	Axia 16 LED 500mA	28 Watts	6.00 Metres	Galvanised Steel	
Y	3	STREET LIGHTING	BELTON GROVE	GRIMSBY	525084.77	407357.03	1990		43986	1 Urbis LED	Axia 16 LED 500mA	28 Watts	6.00 Metres	Galvanised Steel	
Y	4	STREET LIGHTING	BELTON GROVE	GRIMSBY	525086.67	407335.32	1990		43987	1 Urbis LED	Axia 16 LED 500mA	28 Watts	6.00 Metres	Galvanised Steel	
Y	1	STREET LIGHTING	BONBY GROVE	GRIMSBY	525243.6	407342.52	1996		44380	1 Urbis LED	Axia 16 LED 500mA	28 Watts	5.00 Metres	Galvanised Steel	
Y	2	STREET LIGHTING	BONBY GROVE	GRIMSBY	525268.28	407346.44	1996		44381	1 Urbis LED	Axia 16 LED 500mA	28 Watts	5.00 Metres	Galvanised Steel	
Y	3	STREET LIGHTING	BONBY GROVE	GRIMSBY	525246.01	407326.95	1996		44382	1 Urbis LED	Axia 16 LED 500mA	28 Watts	5.00 Metres	Galvanised Steel	
Y	4	STREET LIGHTING	BONBY GROVE	GRIMSBY	525270.69	407330.62	1996		44383	1 Urbis LED	Axia 16 LED 500mA	28 Watts	5.00 Metres	Galvanised Steel	
Y	1	STREET LIGHTING	BREMERHAVEN WAY	GRIMSBY	524951.17	407297	2008		44583	1 Urbis LED	Axia 16 LED 500mA	28 Watts	5.00 Metres	Steel	
Y	2	STREET LIGHTING	BREMERHAVEN WAY	GRIMSBY	524923.58	407304.91	1996		44584	Urbis	Axia 8 LED 350mA	10 Watts	5.00 Metres	Galvanised Steel	
Y	3	STREET LIGHTING	BREMERHAVEN WAY	GRIMSBY	524910.54	407311.56	1996		44585	Urbis	Axia 8 LED 350mA	10 Watts	5.00 Metres	Galvanised Steel	
Y	4	STREET LIGHTING	BREMERHAVEN WAY	GRIMSBY	524911.55	407266.67	2013	03/09/2013	44586	Urbis	Axia 8 LED 350mA	10 Watts	6.00 Metres	Steel	
Y	5	STREET LIGHTING	BREMERHAVEN WAY	GRIMSBY	524910.92	407285.92	1996		44587	Urbis	Axia 8 LED 350mA	10 Watts	5.00 Metres	Galvanised Steel	
Y	6	STREET LIGHTING	BREMERHAVEN WAY	GRIMSBY	524924.21	407291.24	1996		44588	Urbis	Axia 8 LED 350mA	10 Watts	5.00 Metres	Galvanised Steel	
Y	7	STREET LIGHTING	BREMERHAVEN WAY	GRIMSBY	524946.99	407278.39	1996		44589	1 Urbis LED	Axia 16 LED 500mA	28 Watts	5.00 Metres	Galvanised Steel	
Y	9	STREET LIGHTING	BREMERHAVEN WAY	GRIMSBY	524929.27	407267.57	1996		44591	Urbis	Axia 8 LED 350mA	10 Watts	5.00 Metres	Galvanised Steel	
Y	1	STREET LIGHTING	BURNS GROVE	GRIMSBY	525968.95	407352.91	1993		44954	Urbis	Axia 16 LED 350mA	19 Watts	6.00 Metres	Galvanised Steel	
Y	2	STREET LIGHTING	BURNS GROVE	GRIMSBY	525961.87	407323.6	1993		44955	Urbis	Axia 16 LED 350mA	19 Watts	6.00 Metres	Galvanised Steel	
Y	3	STREET LIGHTING	BURNS GROVE	GRIMSBY	525977.94	407304.43	1993		44956	Urbis	Axia 16 LED 350mA	19 Watts	6.00 Metres	Galvanised Steel	
Y	4	STREET LIGHTING	BURNS GROVE	GRIMSBY	525997.31	407291.58	1993		44957	Urbis	Axia 16 LED 350mA	19 Watts	6.00 Metres	Galvanised Steel	
Y	5	STREET LIGHTING	BURNS GROVE	GRIMSBY	525966.17	407284.3	1993		44958	Urbis	Axia 16 LED 350mA	19 Watts	6.00 Metres	Galvanised Steel	
Y	6	STREET LIGHTING	BURNS GROVE	GRIMSBY	525938.07	407296.77	1993		44959	Urbis	Axia 16 LED 350mA	19 Watts	6.00 Metres	Galvanised Steel	
Y	7	STREET LIGHTING	BURNS GROVE	GRIMSBY	525954.02	407306.84	1993		44960	Urbis	Axia 16 LED 350mA	19 Watts	6.00 Metres	Galvanised Steel	
Y	1	STREET LIGHTING	BURWELL DRIVE	GRIMSBY	525582.3	407458.31	2001		44969	1 Urbis LED	Teceo 24 LED 500mA	40 Watts	6.00 Metres	Galvanised Steel	
Y	2	STREET LIGHTING	BURWELL DRIVE	GRIMSBY	525578.25	407428.38	1996		44970	1 Urbis LED	Teceo 24 LED 500mA	40 Watts	6.00 Metres	Galvanised Steel	
Y	3	STREET LIGHTING	BURWELL DRIVE	GRIMSBY	525594	407396	2002		44971	1 Urbis LED	Teceo 24 LED 500mA	40 Watts	6.00 Metres	Stainless Steel	
Y	4	STREET LIGHTING	BURWELL DRIVE	GRIMSBY	525600.53	407346	1996		44972	1 Urbis LED	Teceo 24 LED 500mA	40 Watts	6.00 Metres	Galvanised Steel	
Y	5	STREET LIGHTING	BURWELL DRIVE	GRIMSBY	525600.53	407304.99	1996		44973	1 Urbis LED	Teceo 24 LED 500mA	40 Watts	6.00 Metres	Galvanised Steel	
Y	6	STREET LIGHTING	BURWELL DRIVE	GRIMSBY	525604.37	407268.15	2011		44974	1 Urbis LED	Teceo 24 LED 500mA	40 Watts	6.00 Metres	Steel	
Y	7	STREET LIGHTING	BURWELL DRIVE	GRIMSBY	525620.91	407223.86	1996		44975	1 Urbis LED	Teceo 24 LED 500mA	40 Watts	6.00 Metres	Galvanised Steel	
Y	8	STREET LIGHTING	BURWELL DRIVE	GRIMSBY	525647.24	407197.15	1996		44976	1 Urbis LED	Teceo 24 LED 500mA	40 Watts	6.00 Metres	Galvanised Steel	
Y	9	STREET LIGHTING	BURWELL DRIVE	GRIMSBY	525668	407167.41	1996		44977	1 Urbis LED	Teceo 24 LED 500mA	40 Watts	6.00 Metres	Galvanised Steel	
Y	10	STREET LIGHTING	BURWELL DRIVE	GRIMSBY	525697.97	407148.01	2003		44978	1 Urbis LED	Teceo 24 LED 500mA	40 Watts	6.00 Metres	Stainless Steel	
Y	1	STREET LIGHTING	CABOURNE ROAD	GRIMSBY	525913.56	407007.03	1996		45059	1 Urbis LED	Axia 16 LED 500mA	28 Watts	6.00 Metres	Galvanised Steel	
Y	2	STREET LIGHTING	CABOURNE ROAD	GRIMSBY	525879.64	407018.1	1996		45060	1 Urbis LED	Axia 16 LED 500mA	28 Watts	6.00 Metres	Galvanised Steel	
Y	3	STREET LIGHTING	CABOURNE ROAD	GRIMSBY	525846.85	407009.94	1996		45061	1 Urbis LED	Axia 16 LED 500mA	28 Watts	6.00 Metres	Galvanised Steel	
Y	4	STREET LIGHTING	CABOURNE ROAD	GRIMSBY	525818.5	407024.87	1996		45062	1 Urbis LED	Axia 16 LED 500mA	28 Watts	6.00 Metres	Galvanised Steel	
Y	5	STREET LIGHTING	CABOURNE ROAD	GRIMSBY	525793.44	407001.27	1996		45063	1 Urbis LED	Axia 16 LED 500mA	28 Watts	6.00 Metres	Galvanised Steel	
Y	6	STREET LIGHTING	CABOURNE ROAD	GRIMSBY	525789.13	407032.09	1996		45064	1 Urbis LED	Axia 16 LED 500mA	28 Watts	6.00 Metres	Galvanised Steel	
Y	7	STREET LIGHTING	CABOURNE ROAD	GRIMSBY	525770.78	407007.28	1996		45065	1 Urbis LED	Axia 16 LED 500mA	28 Watts	6.00 Metres	Galvanised Steel	
Y	8	STREET LIGHTING	CABOURNE ROAD	GRIMSBY	525756.48	407044.3	1996		45066	1 Urbis LED	Axia 16 LED 500mA	28 Watts	6.00 Metres	Galvanised Steel	
Y	1	STREET LIGHTING	CAISTOR DRIVE	GRIMSBY	525900.78	407145.18	1996		45071	1 Urbis LED	Axia 16 LED 500mA	28 Watts	6.00 Metres	Galvanised Steel	
Y	2	STREET LIGHTING	CAISTOR DRIVE	GRIMSBY	525862.55	407159.17	1996		45072	1 Urbis LED	Axia 16 LED 500mA	28 Watts	6.00 Metres	Galvanised Steel	
Y	3	STREET LIGHTING	CAISTOR DRIVE	GRIMSBY	525825.21	407162.27	1996		45073	1 Urbis LED	Axia 16 LED 500mA	28 Watts	6.00 Metres	Galvanised Steel	
Y	4	STREET LIGHTING	CAISTOR DRIVE	GRIMSBY	525793.44	407157.84	1996		45074	1 Urbis LED	Axia 16 LED 500mA	28 Watts	6.00 Metres	Galvanised Steel	
Y	5	STREET LIGHTING	CAISTOR DRIVE	GRIMSBY	525774.2	407121.51	1996		45075	1 Urbis LED	Axia 16 LED 500mA	28 Watts	6.00 Metres	Galvanised Steel	
Y	6	STREET LIGHTING	CAISTOR DRIVE	GRIMSBY	525764.83	407076	1996		45076	1 Urbis LED	Axia 16 LED 500mA	28 Watts	6.00 Metres	Galvanised Steel	
Y	7	STREET LIGHTING	CAISTOR DRIVE	GRIMSBY	525736.35	407052.27	1996		45077	1 Urbis LED	Axia 16 LED 500mA	28 Watts	6.00 Metres	Galvanised Steel	
Y	8	STREET LIGHTING	CAISTOR DRIVE	GRIMSBY	525713.06	407024.36	1996		45078	1 Urbis LED	Axia 16 LED 500mA	28 Watts	6.00 Metres	Galvanised Steel	
Y	1	STREET LIGHTING	COLUMBUS WAY	GRIMSBY	524863.59	407096.53	1995		46457	1 Urbis LED	Axia 16 LED 500mA	28 Watts	6.00 Metres	Galvanised Steel	
Y	2	STREET LIGHTING	COLUMBUS WAY	GRIMSBY	524854.22	407067.29	1994		46458	1 Urbis LED	Axia 16 LED 500mA	28 Watts	6.00 Metres	Galvanised Steel	
Y	3	STREET LIGHTING	COLUMBUS WAY	GRIMSBY	524879.92	407053.81	1994		46459	1 Urbis LED	Axia 16 LED 500mA	28 Watts	6.00 Metres	Galvanised Steel	
Y	4	STREET LIGHTING	COLUMBUS WAY	GRIMSBY	524858.27	407037.8	1995		46460	1 Urbis LED	Axia 16 LED 500mA	28 Watts	6.00 Metres	Galvanised Steel	
Y	5	STREET LIGHTING	COLUMBUS WAY	GRIMSBY	524862.83	407021.47	1995		46461	1 Urbis LED	Axia 16 LED 500mA	28 Watts	5.00 Metres	Galvanised Steel	
Y	6	STREET LIGHTING	COLUMBUS WAY	GRIMSBY	524873.97	407016.34	1995		46462	1 Urbis LED	Axia 16 LED 500mA	28 Watts	5.00 Metres	Galvanised Steel	
Y	7	STREET LIGHTING	COLUMBUS WAY	GRIMSBY	524839.16	407010.2	2003		46463	1 Urbis LED	Axia 16 LED 500mA	28 Watts	6.00 Metres	Galvanised Steel	
Y	8	STREET LIGHTING	COLUMBUS WAY	GRIMSBY	524829.41	406984.06	1995		46464	1 Urbis LED	Axia 16 LED 500mA	28 Watts	6.00 Metres	Galvanised Steel	
Y	9	STREET LIGHTING	COLUMBUS WAY	GRIMSBY	524822.45	407003.93	1995		46465	1 Urbis LED	Axia 16 LED 500mA	28 Watts	6.00 Metres	Galvanised Steel	
Y	10	STREET LIGHTING	COLUMBUS WAY	GRIMSBY	524798.4	406977.16	1995		46466	1 Urbis LED	Axia 16 LED 500mA	28 Watts	6.00 Metres	Galvanised Steel	
Y	11	STREET LIGHTING	COLUMBUS WAY	GRIMSBY	524810.37	406935.27	1995		46467	1 Urbis LED	Axia 16 LED 500mA	28 Watts	6.00 Metres	Galvanised Steel	

Y	12	STREET LIGHTING	COLUMBUS WAY	GRIMSBY	524785.56	406926.91	1995		46468	1 Urbis LED	Axia 16 LED 500mA	28 Watts	6.00 Metres	Galvanised Steel	
Y	13	STREET LIGHTING	COLUMBUS WAY	GRIMSBY	524791	406958.81	1995		46469	1 Urbis LED	Axia 16 LED 500mA	28 Watts	6.00 Metres	Galvanised Steel	
Y	14	STREET LIGHTING	COLUMBUS WAY	GRIMSBY	524780.62	406986.46	1995		46470	1 Urbis LED	Axia 16 LED 500mA	28 Watts	6.00 Metres	Galvanised Steel	
Y	15	STREET LIGHTING	COLUMBUS WAY	GRIMSBY	524779.48	407016.4	1995		46471	1 Urbis LED	Axia 16 LED 500mA	28 Watts	6.00 Metres	Galvanised Steel	
Y	16	STREET LIGHTING	COLUMBUS WAY	GRIMSBY	524808.46	407019.12	1995		46472	1 Urbis LED	Axia 16 LED 500mA	28 Watts	6.00 Metres	Galvanised Steel	
Y	17	STREET LIGHTING	COLUMBUS WAY	GRIMSBY	524780.74	407044.5	1995		46473	1 Urbis LED	Axia 16 LED 500mA	28 Watts	6.00 Metres	Galvanised Steel	
Y	18	STREET LIGHTING	COLUMBUS WAY	GRIMSBY	524793.02	407069.06	1995		46474	1 Urbis LED	Axia 16 LED 500mA	28 Watts	6.00 Metres	Galvanised Steel	
Y	19	STREET LIGHTING	COLUMBUS WAY	GRIMSBY	524787.45	407095.89	1995		46475	1 Urbis LED	Axia 16 LED 500mA	28 Watts	6.00 Metres	Galvanised Steel	
Y	20	STREET LIGHTING	COLUMBUS WAY	GRIMSBY	524799.73	407120.83	1995		46476	1 Urbis LED	Axia 16 LED 500mA	28 Watts	6.00 Metres	Galvanised Steel	
Y	21	STREET LIGHTING	COLUMBUS WAY	GRIMSBY	524795.42	407147.22	1995		46477	1 Urbis LED	Axia 16 LED 500mA	28 Watts	6.00 Metres	Galvanised Steel	
Y	2	STREET LIGHTING	FOOTPATH ADJACENT TO 93	GRIMSBY	524798.34	406892.55	1994		48681	Urbis	Axia 8 LED 350mA	10 Watts	5.00 Metres	Galvanised Steel	
Y	3	STREET LIGHTING	FOOTPATH ADJACENT TO 101	GRIMSBY	524767.2	406926.15	1994		48674	Urbis	Axia 8 LED 350mA	10 Watts	5.00 Metres	Galvanised Steel	
Y	4	STREET LIGHTING	FOOTPATH ADJACENT TO 115	GRIMSBY	524759.48	406989.63	1994		48676	Urbis	Axia 8 LED 350mA	10 Watts	6.00 Metres	Galvanised Steel	
Y	5	STREET LIGHTING	FOOTPATH ADJACENT TO 135	GRIMSBY	524756.57	407065.83	1994		48677	Urbis	Axia 8 LED 350mA	10 Watts	5.00 Metres	Galvanised Steel	
Y	6	STREET LIGHTING	FOOTPATH ADJACENT TO 151	GRIMSBY	524759.22	407098.17	1994		48679	Urbis	Axia 8 LED 350mA	10 Watts	5.00 Metres	Galvanised Steel	
Y	7	STREET LIGHTING	FOOTPATH BETWEEN 167 COLUMBUS	GRIMSBY	524764.54	407135.83	1994		48683	Urbis	Axia 8 LED 350mA	10 Watts	5.00 Metres	Galvanised Steel	
Y	9	STREET LIGHTING	FOOTPATH BETWEEN 2 COLUMBUS	GRIMSBY	524825.15	407086.49	1994		48685	Urbis	Axia 8 LED 350mA	10 Watts	5.00 Metres	Galvanised Steel	
Y	10	STREET LIGHTING	FOOTPATH BETWEEN 2 COLUMBUS	GRIMSBY	524820.61	407069.56	1994		48686	Urbis	Axia 8 LED 350mA	10 Watts	5.00 Metres	Galvanised Steel	
Y	11	STREET LIGHTING	FOOTPATH BETWEEN 2 COLUMBUS	GRIMSBY	524819.4	407032.97	1994		48687	Urbis	Axia 8 LED 350mA	10 Watts	5.00 Metres	Galvanised Steel	
Y	1	STREET LIGHTING	CROSBY ROAD	GRIMSBY	525960.55	406940.87	1993		47052	1 Urbis LED	Teceo 24 LED 500mA	40 Watts	8.00 Metres	Galvanised Steel	
Y	2	STREET LIGHTING	CROSBY ROAD	GRIMSBY	525934.22	406939.35	1993		47053	1 Urbis LED	Teceo 24 LED 500mA	40 Watts	8.00 Metres	Galvanised Steel	
Y	3	STREET LIGHTING	CROSBY ROAD	GRIMSBY	525900.3	406948.78	1993		47054	1 Urbis LED	Teceo 24 LED 500mA	40 Watts	8.00 Metres	Galvanised Steel	
Y	4	STREET LIGHTING	CROSBY ROAD	GRIMSBY	525871.82	406935.93	1993		47055	1 Urbis LED	Teceo 24 LED 500mA	40 Watts	8.00 Metres	Galvanised Steel	
Y	5	STREET LIGHTING	CROSBY ROAD	GRIMSBY	525840.68	406934.1	1993		47056	1 Urbis LED	Teceo 24 LED 500mA	40 Watts	8.00 Metres	Galvanised Steel	
Y	6	STREET LIGHTING	CROSBY ROAD	GRIMSBY	525808.53	406943.27	1993		47057	1 Urbis LED	Teceo 24 LED 500mA	40 Watts	8.00 Metres	Galvanised Steel	
Y	7	STREET LIGHTING	CROSBY ROAD	GRIMSBY	525779.29	406930.68	1993		47058	1 Urbis LED	Teceo 24 LED 500mA	40 Watts	8.00 Metres	Galvanised Steel	
Y	8	STREET LIGHTING	CROSBY ROAD	GRIMSBY	525745.75	406939.86	1993		47059	1 Urbis LED	Teceo 24 LED 500mA	40 Watts	8.00 Metres	Galvanised Steel	
Y	9	STREET LIGHTING	CROSBY ROAD	GRIMSBY	525714.48	406926.5	1993		47060	1 Urbis LED	Teceo 24 LED 500mA	40 Watts	8.00 Metres	Galvanised Steel	
Y	10	STREET LIGHTING	CROSBY ROAD	GRIMSBY	525685.11	406936.31	1993		47061	1 Urbis LED	Teceo 24 LED 500mA	40 Watts	8.00 Metres	Galvanised Steel	
Y	11	STREET LIGHTING	CROSBY ROAD	GRIMSBY	525655.75	406934.47	1993		47062	1 Urbis LED	Teceo 32 LED 500mA	52 Watts	8.00 Metres	Galvanised Steel	
Y	12	STREET LIGHTING	CROSBY ROAD	GRIMSBY	525620.94	406932.58	1993		47063	1 Urbis LED	Teceo 32 LED 500mA	52 Watts	8.00 Metres	Galvanised Steel	
Y	13	STREET LIGHTING	CROSBY ROAD	GRIMSBY	525590.43	406930.8	1993		47064	1 Urbis LED	Teceo 24 LED 500mA	40 Watts	8.00 Metres	Galvanised Steel	
Y	14	STREET LIGHTING	CROSBY ROAD	GRIMSBY	525560.68	406918.08	1993		47065	1 Urbis LED	Teceo 24 LED 500mA	40 Watts	8.00 Metres	Galvanised Steel	
Y	15	STREET LIGHTING	CROSBY ROAD	GRIMSBY	525531.06	406927.13	1993		47066	1 Urbis LED	Teceo 24 LED 500mA	40 Watts	8.00 Metres	Galvanised Steel	
Y	16	STREET LIGHTING	CROSBY ROAD	GRIMSBY	525496.76	406914.41	1993		47067	1 Urbis LED	Teceo 24 LED 500mA	40 Watts	8.00 Metres	Galvanised Steel	
Y	17	STREET LIGHTING	CROSBY ROAD	GRIMSBY	525465.75	406923.59	1993		47068	1 Urbis LED	Teceo 24 LED 500mA	40 Watts	8.00 Metres	Galvanised Steel	
Y	18	STREET LIGHTING	CROSBY ROAD	GRIMSBY	525435.24	406910.86	1993		47069	1 Urbis LED	Teceo 24 LED 500mA	40 Watts	8.00 Metres	Galvanised Steel	
Y	19	STREET LIGHTING	CROSBY ROAD	GRIMSBY	525403.6	406920.42	1993		47070	1 Urbis LED	Teceo 24 LED 500mA	40 Watts	8.00 Metres	Galvanised Steel	
Y	20	STREET LIGHTING	CROSBY ROAD	GRIMSBY	525377.9	406908.2	1993		47071	1 Urbis LED	Teceo 24 LED 500mA	40 Watts	8.00 Metres	Galvanised Steel	
Y	21	STREET LIGHTING	CROSBY ROAD	GRIMSBY	525347.9	406906.12	1993		47072	1 Urbis LED	Teceo 32 LED 500mA	52 Watts	8.00 Metres	Galvanised Steel	
Y	22	STREET LIGHTING	CROSBY ROAD	GRIMSBY	525308.92	406904.03	1993		47073	1 Urbis LED	Teceo 32 LED 500mA	52 Watts	8.00 Metres	Galvanised Steel	
Y	23	STREET LIGHTING	CROSBY ROAD	GRIMSBY	525281.32	406912.95	1993		47074	1 Urbis LED	Teceo 32 LED 500mA	52 Watts	8.00 Metres	Galvanised Steel	
Y	24	STREET LIGHTING	CROSBY ROAD	GRIMSBY	525246.26	406900.35	1993		47075	1 Urbis LED	Teceo 32 LED 500mA	52 Watts	8.00 Metres	Galvanised Steel	
Y	25	STREET LIGHTING	CROSBY ROAD	GRIMSBY	525210.06	406898.27	1993		47076	1 Urbis LED	Teceo 32 LED 500mA	52 Watts	8.00 Metres	Galvanised Steel	
Y	26	STREET LIGHTING	CROSBY ROAD	GRIMSBY	525177.65	406907.32	1993		47077	1 Urbis LED	Teceo 24 LED 500mA	40 Watts	8.00 Metres	Galvanised Steel	
Y	27	STREET LIGHTING	CROSBY ROAD	GRIMSBY	525147.02	406894.21	1993		47078	1 Urbis LED	Teceo 24 LED 500mA	40 Watts	8.00 Metres	Galvanised Steel	
Y	28	STREET LIGHTING	CROSBY ROAD	GRIMSBY	525109.05	406903.9	1993		47079	1 Urbis LED	Axia 16 LED 500mA	28 Watts	8.00 Metres	Galvanised Steel	
Y	29	STREET LIGHTING	CROSBY ROAD	GRIMSBY	525081.83	406891.24	1993		47080	1 Urbis LED	Teceo 24 LED 500mA	40 Watts	8.00 Metres	Galvanised Steel	
Y	1	STREET LIGHTING	CROWLE DRIVE	GRIMSBY	525206.51	407112.29	1995		47134	Urbis	Axia 16 LED 350mA	19 Watts	6.00 Metres	Galvanised Steel	
Y	2	STREET LIGHTING	CROWLE DRIVE	GRIMSBY	525213.35	407082.1	1995		47135	Urbis	Axia 16 LED 350mA	19 Watts	6.00 Metres	Galvanised Steel	
Y	3	STREET LIGHTING	CROWLE DRIVE	GRIMSBY	525210.94	407063.81	1995		47136	Urbis	Axia 16 LED 350mA	19 Watts	6.00 Metres	Galvanised Steel	
Y	4	STREET LIGHTING	CROWLE DRIVE	GRIMSBY	525237.34	407061.62	2021	28/04/2021	68436	Urbis	Axia 16 LED 350mA	19 Watts	6.00 Metres	Galvanised Steel	
Y	5	STREET LIGHTING	CROWLE DRIVE	GRIMSBY	525229.29	407045.71	1995		47138	Urbis	Axia 16 LED 350mA	19 Watts	6.00 Metres	Galvanised Steel	
Y	6	STREET LIGHTING	CROWLE DRIVE	GRIMSBY	525243.34	407037.67	1995		47139	Urbis	Axia 16 LED 350mA	19 Watts	6.00 Metres	Galvanised Steel	
Y	7	STREET LIGHTING	CROWLE DRIVE	GRIMSBY	525261.06	407016.73	1995		47140	Urbis	Axia 16 LED 350mA	19 Watts	6.00 Metres	Galvanised Steel	
Y	8	STREET LIGHTING	CROWLE DRIVE	GRIMSBY	525277.77	407000.21	1995		47141	Urbis	Axia 16 LED 350mA	19 Watts	6.00 Metres	Galvanised Steel	
Y	9	STREET LIGHTING	CROWLE DRIVE	GRIMSBY	525306.02	406989.38	1995		47142	Urbis	Axia 16 LED 350mA	19 Watts	6.00 Metres	Galvanised Steel	
Y	10	STREET LIGHTING	CROWLE DRIVE	GRIMSBY	525324.76	406968.5	1995		47143	Urbis	Axia 16 LED 350mA	19 Watts	6.00 Metres	Galvanised Steel	
Y	1	STREET LIGHTING	DALE VIEW	GRIMSBY	524973.09	407180.84	1996		47250	Urbis	Axia 16 LED 350mA	19 Watts	5.00 Metres	Galvanised Steel	
Y	2	STREET LIGHTING	DALE VIEW	GRIMSBY	524956	407180.53	2007		47251	Urbis	Axia 8 LED 350mA	10 Watts	5.00 Metres	Stainless Steel	
Y	3	STREET LIGHTING	DALE VIEW	GRIMSBY	524942.97	407195.72	1996		47252	Urbis	Axia 8 LED 350mA	10 Watts	5.00 Metres	Galvanised Steel	
Y	4	STREET LIGHTING	DALE VIEW	GRIMSBY	524929.68	407181.73	1996		47253	Urbis	Axia 8 LED 350mA	10 Watts	5.00 Metres	Galvanised Steel	
Y	5	STREET LIGHTING	DALE VIEW	GRIMSBY	524913.22	407183.19	1996		47254	Urbis	Axia 8 LED 350mA	10 Watts	5.00 Metres	Galvanised Steel	
Y	6	STREET LIGHTING	DALE VIEW	GRIMSBY	524917.15	407161.86	1996		47255	Urbis	Axia 8 LED 350mA	10 Watts	5.00 Metres	Galvanised Steel	
Y	7	STREET LIGHTING	DALE VIEW	GRIMSBY	524918.54	407142.81	1996		47256	Urbis	Axia 8 LED 350mA	10 Watts	5.00 Metres	Galvanised Steel	
Y	8	STREET LIGHTING	DALE VIEW	GRIMSBY	524929.93	407166.86	1996		47257	Urbis	Axia 8 LED 350mA	10 Watts	5.00 Metres	Galvanised Steel	
Y	9	STREET LIGHTING	DALE VIEW	GRIMSBY	524954.87	407167.24	1996		47258	Urbis	Axia 8 LED 350mA	10 Watts	5.00 Metres	Galvanised Steel	
Y	10	STREET LIGHTING	DALE VIEW	GRIMSBY	524958.41	407157.62	1996		47259	Urbis	Axia 16 LED 350mA	19 Watts	5.00 Metres	Galvanised Steel	
Y	11	STREET LIGHTING	DALE VIEW	GRIMSBY	524943.85	407141.48	1996		47260	Urbis	Axia 8 LED 350mA	10 Watts	5.00 Metres	Galvanised Steel	
Y	12	STREET LIGHTING	DALE VIEW	GRIMSBY	524958.92	407134.01	1996		47261	Urbis	Axia 16 LED 350mA	19 Watts	5.00 Metres	Galvanised Steel	
Y	13	STREET LIGHTING	DALE VIEW	GRIMSBY	524959.17	407113.32	1996		47262	Urbis	Axia 8 LED 350mA	10 Watts	5.00 Metres	Galvanised Steel	
Y	1	STREET LIGHTING	DAME KENDAL GROVE	GRIMSBY	525900.86	407442.6	1995		47263	Urbis	Axia 16 LED 350mA	19 Watts	6.00 Metres	Galvanised Steel	
Y	2	STREET LIGHTING	DAME KENDAL GROVE	GRIMSBY	525931.61	407453.99	1995		47264	Urbis	Axia 16 LED 350mA	19 Watts	6.00 Metres	Galvanised Steel	
Y	3	STREET LIGHTING	DAME KENDAL GROVE	GRIMSBY	525942.12	407471.02	1995		47265	Urbis	Axia 16 LED 350mA	19 Watts	6.00 Metres	Galvanised Steel	
Y	4	STREET LIGHTING	DAME KENDAL GROVE	GRIMSBY	525953.13	407486.65	1995		47266	Urbis	Axia 16 LED 350mA	19 Watts	6.00 Metres	Galvanised Steel	
Y	5	STREET LIGHTING	DAME KENDAL GROVE	GRIMSBY	525968.07	407465.83	1995		47267	Urbis	Axia 16 LED 350mA	19 Watts	6.00 Metres	Galvanised Steel	
Y	6	STREET LIGHTING	DAME KENDAL GROVE	GRIMSBY	525963.13	407439.94	1995		47268	Urbis	Axia 16 LED 350mA	19 Watts	6.00 Metres	Galvanised Steel	
Y	7	STREET LIGHTING	DAME KENDAL GROVE	GRIMSBY	525948.96	407450.51	1995		47269	Urbis	Axia 16 LED 350mA	19 Watts	6.00 Metres	Galvanised Steel	
Y	1	STREET LIGHTING	DOLBY VALE	GRIMSBY	524959.68	407369.54	1996		47484	Urbis	Axia 16 LED 350mA	19 Watts	5.00 Metres	Galvanised Steel	
Y	2	STREET LIGHTING	DOLBY VALE	GRIMSBY	524924.24	407368.72	1996		47485	Urbis	Axia 16 LED 350mA	19 Watts	5.00 Metres	Galvanised Steel	
Y	3	STREET LIGHTING	DOLBY VALE	GRIMSBY	524912.21	407373.97	1996		47486	Urbis	Axia 8 LED 350mA	10 Watts	5.00 Metres	Galvanised Steel	
Y	4	STREET LIGHTING	DOLBY VALE	GRIMSBY	524909.93	407349.85	1996		47487	Urbis	Axia 8 LED 350mA	10 Watts	5.00 Metres	Galvanised Steel	
Y	5	STREET LIGHTING	DOLBY VALE	GRIMSBY	524910.18	407329.85	2013		47488	Urbis	Axia 8 LED 350mA	10 Watts	6.00 Metres	Steel	
Y	6	STREET LIGHTING	DOLBY VALE	GRIMSBY	524924.74	407354.28	1999		47489	Urbis	Axia 16 LED 350mA	19 Watts	5.00 Metres	Galvanised Steel	
Y	7	STREET LIGHTING	DOLBY VALE	GRIMSBY	524940.18	407341.18	1996		47490	Urbis	Axia 16 LED 350mA	19 Watts	5.00 Metres	Galvanised Steel	
Y	8	STREET LIGHTING	DOLBY VALE	GRIMSBY	524933.22	407329.79	1996		47491	Urbis	Axia 8 LED 350mA	10 Watts	5.00 Metres	Galvanised Steel	
Y	10	STREET LIGHTING	DOLBY VALE	GRIMSBY	524956.89	407355.11	1999		47493	Urbis	Axia 16 LED 350mA	19 Watts	5.00 Metres	Galvanised Steel	
Y	1	STREET LIGHTING	EASTVILLE ROAD	GRIMSBY	525223.37	407269.2	2015		47771	1 Urbis LED	Axia 16 LED 500mA	28 Watts	6.00 Metres	Galvanised Steel	
Y	2	STREET LIGHTING	EASTVILLE ROAD	GRIMSBY	525195.9	407262.8	1995		47772	1 Urbis LED	Axia 16 LED 500mA	28 Watts	6.00 Metres	Galvanised Steel	
Y	3	STREET LIGHTING	EASTVILLE ROAD	GRIMSBY	525169.83	407268.75	1995		47773	1 Urbis LED	Axia 16 LED 500mA	28 Watts	6.00 Metres	Galvanised Steel	
Y	1	STREET LIGHTING	FIRSBY CRESCENT	GRIMSBY	525236.01	406924.58	1996		48592	1 Urbis LED	Axia 16 LED 500mA	28 Watts	6.00 Metres	Galvanised Steel	
Y	2	STREET LIGHTING	FIRSBY CRESCENT	GRIMSBY	525232.85	406958.82	1996		48593	1 Urbis LED	Axia 16 LED 500mA	28 Watts	6.00 Metres	Galvanised Steel	
Y	3	STREET LIGHTING	FIRSBY CRESCENT	GRIMSBY	525195.88	406971.6	1996		48594	Urbis	Axia 8 LED 350mA	10 Watts	5.00 Metres	Galvanised Steel	
Y	4	STREET LIGHTING	FIRSBY CRESCENT	GRIMSBY	525206.52	406987.24	1996		48595	1 Urbis LED	Axia 16 LED 500mA	28 Watts	6.00 Metres	Galvanised Steel	
Y	5	STREET LIGHTING	FIRSBY CRESCENT	GRIMSBY	525173.48	407003.38	1996		48596	1 Urbis LED	Axia 16 LED 500mA	28 Watts	6.00 Metres	Galvanised Steel	
Y	6	STREET LIGHTING	FIRSBY CRESCENT	GRIMSBY	525137.79	407006.16	1996		48597	1 Urbis LED	Axia 16 LED 500mA	28 Watts	6.00 Metres	Galvanised Steel	
Y	1	STREET LIGHTING	FULSTOW GROVE	GRIMSBY	525685.47	407255.96	1996		49059	1 Urbis LED	Axia 16 LED 500mA	28 Watts	5.00 Metres	Galvanised Steel	
Y	1	STREET LIGHTING	KIRKSTEAD CRESCENT	GRIMSBY	525655.11	407162.21	1996		51903	1 Urbis LED	Teceo 24 LED 500mA	40 Watts	6.00 Metres	Galvanised Steel	
Y	2	STREET LIGHTING	KIRKSTEAD CRESCENT	GRIMSBY	525632.96	407142.14	1996		51904	1 Urbis LED	Teceo 24 LED 500mA	40 Watts	6.00 Metres	Galvanised Steel	
Y	3	STREET LIGHTING	KIRKSTEAD CRESCENT	GRIMSBY	525621.94	407113.92	1996		51905	1 Urbis LED	Teceo 24 LED 500mA	40 Watts	6.00 Metres	Galvanised Steel	
Y	4	STREET LIGHTING	KIRKSTEAD CRESCENT	GRIMSBY	525584.6	407092.33	1996		51906	1 Urbis LED	Teceo 24 LED 500mA	40 Watts	6.00 Metres	Galvanised Steel	
Y	5	STREET LIGHTING	KIRKSTEAD CRESCENT	GRIMSBY	525551.31	407066.45	1996		51907	1 Urbis LED	Teceo 24 LED 500mA	40 Watts	6.00 Metres	Galvanised Steel	
Y	6	STREET LIGHTING	KIRKSTEAD CRESCENT	GRIMSBY	525514.25	407066.9	2021	12/10/2021	68735	Urbis	Teceo 24 LED 500mA	40 Watts	6.00 Metres	Galvanised Steel	
Y	7	STREET LIGHTING	KIRKSTEAD CRESCENT	GRIMSBY	525469.95	407056.74	2020	10/01/2020	67718	Urbis	Teceo 24 LED 500mA	40 Watts	6.00 Metres	Galvanised Steel	
Y	8	STREET LIGHTING	KIRKSTEAD CRESCENT	GRIMSBY	525431.95	407074.04	1996		51910	1 Urbis LED	Teceo 24 LED 500mA	40 Watts	6.00 Metres	Galvanised Steel	
Y	9	STREET LIGHTING	KIRKSTEAD CRESCENT	GRIMSBY	525391.19	407084.74	1996		51911	1 Urbis LED	Teceo 24 LED 500mA	40 Watts	6.00 Metres	Galvanised Steel	
Y	10	STREET LIGHTING	KIRKSTEAD CRESCENT	GRIMSBY	525366.5	407112.27	1996		51912	1 Urbis LED	Teceo 24 LED 500mA	40 Watts	6.00 Metres	Galvanised Steel	
Y	1	STREET LIGHTING	LANGTON CLOSE	GRIMSBY	525384.28	407178.05	1996		52268	1 Urbis LED	Axia 16 LED 500mA	28 Watts	6.00 Metres	Galvanised Steel	
Y	2	STREET LIGHTING	LANGTON CLOSE	GRIMSBY	525427.31	407164.06	1996		52269	1 Urbis LED	Axia 16 LED 500mA	28 Watts	6.00 Metres	Galvanised Steel	
Y	3	STREET LIGHTING	LANGTON CLOSE	GRIMSBY	525453.77	407150.01	1996		52270	1 Urbis LED	Axia 16 LED 500mA	28 Watts	6.00 Metres	Galvanised Steel	

Y	4	STREET LIGHTING	LANGTON CLOSE	GRIMSBY	525481.11	407135.26	1996		52271	1 Urbis LED	Axia 16 LED 500mA	28 Watts	6.00 Metres	Galvanised Steel	
Y	5	STREET LIGHTING	LANGTON CLOSE	GRIMSBY	525457.19	407127.92	1996		52272	1 Urbis LED	Axia 16 LED 500mA	28 Watts	6.00 Metres	Galvanised Steel	
Y	6	STREET LIGHTING	LANGTON CLOSE	GRIMSBY	525422.25	407146.28	1996		52273	1 Urbis LED	Axia 16 LED 500mA	28 Watts	6.00 Metres	Galvanised Steel	
Y	1	STREET LIGHTING	LANGTON DRIVE	GRIMSBY	525328.78	407410.13	1995		52274	1 Urbis LED	Axia 16 LED 500mA	28 Watts	6.00 Metres	Galvanised Steel	
Y	2	STREET LIGHTING	LANGTON DRIVE	GRIMSBY	525333.94	407385.45	1995		52275	1 Urbis LED	Axia 16 LED 500mA	28 Watts	6.00 Metres	Galvanised Steel	
Y	3	STREET LIGHTING	LANGTON DRIVE	GRIMSBY	525338.91	407361.8	1995		52276	1 Urbis LED	Axia 16 LED 500mA	28 Watts	6.00 Metres	Galvanised Steel	
Y	4	STREET LIGHTING	LANGTON DRIVE	GRIMSBY	525335.04	407330.04	1995		52277	1 Urbis LED	Axia 16 LED 500mA	28 Watts	6.00 Metres	Galvanised Steel	
Y	5	STREET LIGHTING	LANGTON DRIVE	GRIMSBY	525350.32	407307.3	1995		52278	1 Urbis LED	Axia 16 LED 500mA	28 Watts	6.00 Metres	Galvanised Steel	
Y	6	STREET LIGHTING	LANGTON DRIVE	GRIMSBY	525346.55	407275.65	1995		52279	1 Urbis LED	Axia 16 LED 500mA	28 Watts	6.00 Metres	Galvanised Steel	
Y	7	STREET LIGHTING	LANGTON DRIVE	GRIMSBY	525362.63	407250.4	1995		52280	1 Urbis LED	Axia 16 LED 500mA	28 Watts	6.00 Metres	Galvanised Steel	
Y	8	STREET LIGHTING	LANGTON DRIVE	GRIMSBY	525357.57	407224.32	1995		52281	1 Urbis LED	Axia 16 LED 500mA	28 Watts	6.00 Metres	Galvanised Steel	
Y	9	STREET LIGHTING	LANGTON DRIVE	GRIMSBY	525372.63	407196.41	1995		52282	1 Urbis LED	Axia 16 LED 500mA	28 Watts	6.00 Metres	Galvanised Steel	
Y	10	STREET LIGHTING	LANGTON DRIVE	GRIMSBY	525361.87	407171.23	1995		52283	1 Urbis LED	Axia 16 LED 500mA	28 Watts	6.00 Metres	Galvanised Steel	
Y	11	STREET LIGHTING	LANGTON DRIVE	GRIMSBY	525368.58	407145.44	1995		52284	1 Urbis LED	Axia 16 LED 500mA	28 Watts	6.00 Metres	Galvanised Steel	
Y	12	STREET LIGHTING	LANGTON DRIVE	GRIMSBY	525347.69	407119.87	1995		52285	1 Urbis LED	Axia 16 LED 500mA	28 Watts	6.00 Metres	Galvanised Steel	
Y	13	STREET LIGHTING	LANGTON DRIVE	GRIMSBY	525343.01	407091.4	1995		52286	1 Urbis LED	Axia 16 LED 500mA	28 Watts	6.00 Metres	Galvanised Steel	
Y	14	STREET LIGHTING	LANGTON DRIVE	GRIMSBY	525323.23	407084.06	2020	14/01/2020	67738	Urbis	Axia 24 LED 500mA	28 Watts	6.00 Metres	Galvanised Steel	
Y	1	STREET LIGHTING	MALVERN AVENUE	GRIMSBY	525182.23	407503.65	2007		53123	1 Urbis LED	Axia 16 LED 500mA	28 Watts	6.00 Metres	Steel	
Y	2	STREET LIGHTING	MALVERN AVENUE	GRIMSBY	525147.51	407496.86	2007		53124	1 Urbis LED	Axia 16 LED 500mA	28 Watts	6.00 Metres	Steel	
Y	3	STREET LIGHTING	MALVERN AVENUE	GRIMSBY	525108.32	407489.28	2007		53125	1 Urbis LED	Axia 16 LED 500mA	28 Watts	6.00 Metres	Steel	
Y	4	STREET LIGHTING	MALVERN AVENUE	GRIMSBY	525067.75	407481.51	2007		53126	1 Urbis LED	Axia 16 LED 500mA	28 Watts	6.00 Metres	Steel	
Y	5	STREET LIGHTING	MALVERN AVENUE	GRIMSBY	525040.02	407476.16	2007		53127	1 Urbis LED	Axia 16 LED 500mA	28 Watts	6.00 Metres	Steel	
Y	1	STREET LIGHTING	MARTON GROVE	GRIMSBY	525138.43	407286.54	1995		53406	Urbis	Axia 16 LED 350mA	19 Watts	5.00 Metres	Galvanised Steel	
Y	2	STREET LIGHTING	MARTON GROVE	GRIMSBY	525121.63	407298.09	2020	02/09/2020	68001	Urbis	Axia 16 LED 350mA	19 Watts	6.00 Metres	Galvanised Steel	
Y	3	STREET LIGHTING	MARTON GROVE	GRIMSBY	525104.89	407273.18	1995		53408	Urbis	Axia 16 LED 350mA	19 Watts	6.00 Metres	Galvanised Steel	
Y	4	STREET LIGHTING	MARTON GROVE	GRIMSBY	525102.23	407298.31	1995		53409	Urbis	Axia 16 LED 350mA	19 Watts	5.00 Metres	Galvanised Steel	
Y	1	STREET LIGHTING	ORBY GROVE	GRIMSBY	525279.45	407430.27	1997		54418	Urbis	Axia 16 LED 350mA	19 Watts	5.00 Metres	Galvanised Steel	
Y	2	STREET LIGHTING	ORBY GROVE	GRIMSBY	525273.25	407459.76	1997		54419	Urbis	Axia 16 LED 350mA	19 Watts	5.00 Metres	Galvanised Steel	
Y	3	STREET LIGHTING	ORBY GROVE	GRIMSBY	525288.69	407462.93	1997		54420	Urbis	Axia 16 LED 350mA	19 Watts	5.00 Metres	Galvanised Steel	
Y	4	STREET LIGHTING	ORBY GROVE	GRIMSBY	525294.77	407433.12	1997		54421	Urbis	Axia 16 LED 350mA	19 Watts	5.00 Metres	Galvanised Steel	
Y	1	STREET LIGHTING	PINEWOOD CRESCENT	GRIMSBY	525081.08	407088	1995		55499	1 Urbis LED	Axia 16 LED 500mA	28 Watts	6.00 Metres	Galvanised Steel	
Y	2	STREET LIGHTING	PINEWOOD CRESCENT	GRIMSBY	525055.26	407078.51	1995		55500	1 Urbis LED	Axia 16 LED 500mA	28 Watts	6.00 Metres	Galvanised Steel	
Y	3	STREET LIGHTING	PINEWOOD CRESCENT	GRIMSBY	525029.88	407075.37	2021	20/05/2021	68435	Urbis	Axia 24 LED 500mA	28 Watts	6.00 Metres	Galvanised Steel	
Y	4	STREET LIGHTING	PINEWOOD CRESCENT	GRIMSBY	525005.9	407092.62	1995		55502	1 Urbis LED	Axia 16 LED 500mA	28 Watts	6.00 Metres	Galvanised Steel	
Y	5	STREET LIGHTING	PINEWOOD CRESCENT	GRIMSBY	524975.14	407092.69	1995		55503	1 Urbis LED	Axia 16 LED 500mA	28 Watts	6.00 Metres	Galvanised Steel	
Y	6	STREET LIGHTING	PINEWOOD CRESCENT	GRIMSBY	524952.99	407097.94	1995		55504	1 Urbis LED	Axia 16 LED 500mA	28 Watts	6.00 Metres	Galvanised Steel	
Y	7	STREET LIGHTING	PINEWOOD CRESCENT	GRIMSBY	524928.18	407111.74	1995		55505	1 Urbis LED	Axia 16 LED 500mA	28 Watts	6.00 Metres	Galvanised Steel	
Y	8	STREET LIGHTING	PINEWOOD CRESCENT	GRIMSBY	524900.08	407104.46	2006		55506	1 Urbis LED	Axia 16 LED 500mA	28 Watts	6.00 Metres	Stainless Steel	
Y	9	STREET LIGHTING	PINEWOOD CRESCENT	GRIMSBY	524874.89	407105.92	1995		55507	1 Urbis LED	Axia 16 LED 500mA	28 Watts	6.00 Metres	Galvanised Steel	
Y	10	STREET LIGHTING	PINEWOOD CRESCENT	GRIMSBY	524851.47	407115.67	1995		55508	1 Urbis LED	Axia 16 LED 500mA	28 Watts	6.00 Metres	Galvanised Steel	
Y	11	STREET LIGHTING	PINEWOOD CRESCENT	GRIMSBY	524828.05	407114.21	1995		55509	1 Urbis LED	Axia 16 LED 500mA	28 Watts	6.00 Metres	Galvanised Steel	
Y	12	STREET LIGHTING	PINEWOOD CRESCENT	GRIMSBY	524802.36	407104.65	1995		55510	1 Urbis LED	Axia 16 LED 500mA	28 Watts	6.00 Metres	Galvanised Steel	
Y	1	STREET LIGHTING	RAITHBY GROVE	GRIMSBY	525261.2	407225.62	1996		55911	Urbis	Axia 16 LED 350mA	19 Watts	5.00 Metres	Galvanised Steel	
Y	2	STREET LIGHTING	RAITHBY GROVE	GRIMSBY	525287.02	407229.41	1996		55912	Urbis	Axia 16 LED 350mA	19 Watts	5.00 Metres	Galvanised Steel	
Y	3	STREET LIGHTING	RAITHBY GROVE	GRIMSBY	525289.8	407213.84	1996		55913	Urbis	Axia 16 LED 350mA	19 Watts	5.00 Metres	Galvanised Steel	
Y	4	STREET LIGHTING	RAITHBY GROVE	GRIMSBY	525263.6	407209.67	1996		55914	Urbis	Axia 16 LED 350mA	19 Watts	5.00 Metres	Galvanised Steel	
Y	1	STREET LIGHTING	REDBOURNE ROAD	GRIMSBY	525749.08	407230.85	2005		55942	1 Urbis LED	Teceo 16 LED 500mA	28 Watts	6.00 Metres	Stainless Steel	
Y	2	STREET LIGHTING	REDBOURNE ROAD	GRIMSBY	525777.46	407221.85	2019	04/10/2019	67577	Urbis	Teceo 16 LED 500mA	28 Watts	6.00 Metres	Galvanised Steel	
Y	3	STREET LIGHTING	REDBOURNE ROAD	GRIMSBY	525801.48	407228.89	1993		55944	1 Urbis LED	Teceo 16 LED 500mA	28 Watts	6.00 Metres	Galvanised Steel	
Y	4	STREET LIGHTING	REDBOURNE ROAD	GRIMSBY	525825.23	407228.98	2019	04/10/2019	67624	Urbis	Teceo 16 LED 500mA	28 Watts	6.00 Metres	Galvanised Steel	
Y	5	STREET LIGHTING	REDBOURNE ROAD	GRIMSBY	525851.71	407218.23	1993		55946	1 Urbis LED	Teceo 16 LED 500mA	28 Watts	6.00 Metres	Galvanised Steel	
Y	6	STREET LIGHTING	REDBOURNE ROAD	GRIMSBY	525880.53	407215.57	2021	03/12/2021	68789	Urbis	Teceo 16 LED 500mA	25 Watts	6.00 Metres	Galvanised Steel	
Y	7	STREET LIGHTING	REDBOURNE ROAD	GRIMSBY	525902.09	407221.14	2008		55948	1 Urbis LED	Teceo 16 LED 500mA	28 Watts	6.00 Metres	Steel	
Y	8	STREET LIGHTING	REDBOURNE ROAD	GRIMSBY	525923.61	407219.69	2008		55949	1 Urbis LED	Teceo 16 LED 500mA	28 Watts	6.00 Metres	Steel	
Y	9	STREET LIGHTING	REDBOURNE ROAD	GRIMSBY	525946.64	407210.64	1993		55950	1 Urbis LED	Teceo 16 LED 500mA	28 Watts	6.00 Metres	Galvanised Steel	
Y	10	STREET LIGHTING	REDBOURNE ROAD	GRIMSBY	525969.93	407215.83	1993		55951	1 Urbis LED	Teceo 16 LED 500mA	28 Watts	6.00 Metres	Galvanised Steel	
Y	11	STREET LIGHTING	REDBOURNE ROAD	GRIMSBY			2024	30/10/2024	70046	Urbis	Axia 16 LED 500mA	28 Watts	6.00 Metres	Galvanised Steel	
Y	12	STREET LIGHTING	REDBOURNE ROAD	GRIMSBY	526023.9	407203.22	2021	03/12/2021	68863	Urbis	Teceo 16 LED 500mA	25 Watts	6.00 Metres	Galvanised Steel	
Y	13	STREET LIGHTING	REDBOURNE ROAD	GRIMSBY	526054.23	407208.93	1993		55954	1 Urbis LED	Teceo 16 LED 500mA	28 Watts	6.00 Metres	Galvanised Steel	
Y	14	STREET LIGHTING	REDBOURNE ROAD	GRIMSBY	526075.25	407199.56	1993		55955	1 Urbis LED	Teceo 16 LED 500mA	28 Watts	6.00 Metres	Galvanised Steel	
Y	1	STREET LIGHTING	REDBOURNE ROAD ACCESS ROAD 1	GRIMSBY	525812.62	407233.82	1997		55956	Urbis	Axia 16 LED 350mA	19 Watts	5.00 Metres	Galvanised Steel	
Y	2	STREET LIGHTING	REDBOURNE ROAD ACCESS ROAD 1	GRIMSBY	525817.3	407245.91	1997		55957	Urbis	Axia 16 LED 350mA	19 Watts	5.00 Metres	Galvanised Steel	
Y	3	STREET LIGHTING	REDBOURNE ROAD ACCESS ROAD 1	GRIMSBY	525791.1	407247.05	1997		55958	Urbis	Axia 16 LED 350mA	19 Watts	5.00 Metres	Galvanised Steel	
Y	1	STREET LIGHTING	REDBOURNE ROAD ACCESS ROAD 2	GRIMSBY	525927	407228.18	1997		55959	Urbis	Axia 16 LED 350mA	19 Watts	5.00 Metres	Galvanised Steel	
Y	2	STREET LIGHTING	REDBOURNE ROAD ACCESS ROAD 2	GRIMSBY	525955.6	407235.26	1997		55960	Urbis	Axia 16 LED 350mA	19 Watts	5.00 Metres	Galvanised Steel	
Y	3	STREET LIGHTING	REDBOURNE ROAD ACCESS ROAD 2	GRIMSBY	525984.72	407225.2	1997		55961	Urbis	Axia 16 LED 350mA	19 Watts	5.00 Metres	Galvanised Steel	
Y	4	STREET LIGHTING	REDBOURNE ROAD ACCESS ROAD 2	GRIMSBY	526013.83	407230.64	1997		55962	Urbis	Axia 16 LED 350mA	19 Watts	5.00 Metres	Galvanised Steel	
Y	1	STREET LIGHTING	TORKSEY PLACE	GRIMSBY	525884.15	407405.14	2004		59339	Urbis	Axia 16 LED 350mA	19 Watts	6.00 Metres	Stainless Steel	
Y	2	STREET LIGHTING	TORKSEY PLACE	GRIMSBY	525850.98	407389.31	1995		59340	Urbis	Axia 16 LED 350mA	19 Watts	6.00 Metres	Galvanised Steel	
Y	1	STREET LIGHTING	ROTHWELL AVENUE	GRIMSBY	525525.4	407048.1	2009		56319	Urbis	Axia 16 LED 350mA	19 Watts	6.00 Metres	Steel	
Y	2	STREET LIGHTING	ROTHWELL AVENUE	GRIMSBY	525505.69	407045.38	2009		56320	Urbis	Axia 16 LED 350mA	19 Watts	6.00 Metres	Steel	
Y	3	STREET LIGHTING	ROTHWELL AVENUE	GRIMSBY	525527.39	407030.14	2009		56321	Urbis	Axia 16 LED 350mA	19 Watts	6.00 Metres	Steel	
Y	4	STREET LIGHTING	ROTHWELL AVENUE	GRIMSBY	525503.66	407027.31	2009		56322	Urbis	Axia 16 LED 350mA	19 Watts	6.00 Metres	Steel	
Y	5	STREET LIGHTING	ROTHWELL AVENUE	GRIMSBY	525528.71	407009.47	2009		56323	Urbis	Axia 16 LED 350mA	19 Watts	6.00 Metres	Steel	
Y	6	STREET LIGHTING	ROTHWELL AVENUE	GRIMSBY	525508.89	407010.7	2009		56324	Urbis	Axia 16 LED 350mA	19 Watts	6.00 Metres	Steel	
Y	7	STREET LIGHTING	ROTHWELL AVENUE	GRIMSBY	525531.11	406973.33	2009		56325	Urbis	Axia 16 LED 350mA	19 Watts	6.00 Metres	Galvanised Steel	
Y	8	STREET LIGHTING	ROTHWELL AVENUE	GRIMSBY	525511.11	406970.31	2009		56326	Urbis	Axia 16 LED 350mA	19 Watts	6.00 Metres	Galvanised Steel	
Y	9	STREET LIGHTING	ROTHWELL AVENUE	GRIMSBY	525533.1	406942.53	2009		56327	Urbis	Axia 16 LED 350mA	19 Watts	6.00 Metres	Galvanised Steel	
Y	10	STREET LIGHTING	ROTHWELL AVENUE	GRIMSBY	525513.19	406939.65	2009		56328	Urbis	Axia 16 LED 350mA	19 Watts	6.00 Metres	Galvanised Steel	
Y	1	STREET LIGHTING	SAXBY GROVE	GRIMSBY	525331.11	407299.63	1997		56621	Urbis	Axia 16 LED 350mA	19 Watts	5.00 Metres	Galvanised Steel	
Y	2	STREET LIGHTING	SAXBY GROVE	GRIMSBY	525334.15	407284.45	1997		56622	Urbis	Axia 16 LED 350mA	19 Watts	5.00 Metres	Galvanised Steel	
Y	3	STREET LIGHTING	SAXBY GROVE	GRIMSBY	525308.07	407285.33	1997		56623	Urbis	Axia 16 LED 350mA	19 Watts	5.00 Metres	Galvanised Steel	
Y	1	STREET LIGHTING	SELGE WAY	GRIMSBY	524850.93	406998.81	1995		56884	Urbis	Axia 16 LED 350mA	19 Watts	5.00 Metres	Galvanised Steel	
Y	2	STREET LIGHTING	SELGE WAY	GRIMSBY	524874.47	406998.87	1995		56885	Urbis	Axia 16 LED 350mA	19 Watts	5.00 Metres	Galvanised Steel	
Y	3	STREET LIGHTING	SELGE WAY	GRIMSBY	524874.95	406980.27	1995		56886	Urbis	Axia 16 LED 350mA	19 Watts	5.00 Metres	Galvanised Steel	
Y	4	STREET LIGHTING	SELGE WAY	GRIMSBY	524876.6	406950.59	1995		56887	Urbis	Axia 16 LED 350mA	19 Watts	5.00 Metres	Galvanised Steel	
Y	5	STREET LIGHTING	SELGE WAY	GRIMSBY	524868.87	406930.34	1995		56888	Urbis	Axia 16 LED 350mA	19 Watts	5.00 Metres	Galvanised Steel	
Y	6	STREET LIGHTING	SELGE WAY	GRIMSBY	524854.95	406952.04	1995		56889	Urbis	Axia 16 LED 350mA	19 Watts	5.00 Metres	Galvanised Steel	
Y	7	STREET LIGHTING	SELGE WAY	GRIMSBY	524841.12	406935.57	2021	13/10/2021	68737	Urbis	Axia 16 LED 350mA	19 Watts	6.00 Metres	Galvanised Steel	
Y	1	STREET LIGHTING	FOOTPATH ADJACENT TO 14 SELGE	GRIMSBY	524904.57	406941.67	1994		48678	Urbis	Axia 8 LED 350mA	10 Watts	5.00 Metres	Galvanised Steel	
Y	1	STREET LIGHTING	SHELLEY AVENUE	GRIMSBY	526038.8	407366.3	1993		57124	1 Urbis LED	Axia 16 LED 500mA	28 Watts	6.00 Metres	Galvanised Steel	
Y	2	STREET LIGHTING	SHELLEY AVENUE	GRIMSBY	525999.03	407359.12	1993		57125	1 Urbis LED	Axia 16 LED 500mA	28 Watts	6.00 Metres	Galvanised Steel	
Y	3	STREET LIGHTING	SHELLEY AVENUE	GRIMSBY	525966.08	407380.11	1993		57126	1 Urbis LED	Axia 16 LED 500mA	28 Watts	6.00 Metres	Galvanised Steel	
Y	4	STREET LIGHTING	SHELLEY AVENUE	GRIMSBY	525931.46	407386.1	1993		57127	1 Urbis LED	Axia 16 LED 500mA	28 Watts	6.00 Metres	Galvanised Steel	
Y	5	STREET LIGHTING	SHELLEY AVENUE	GRIMSBY	525913.97	407412.15	1993		57128	1 Urbis LED	Axia 16 LED 500mA	28 Watts	6.00 Metres	Galvanised Steel	
Y	6	STREET LIGHTING	SHELLEY AVENUE	GRIMSBY	525885.25	407426.05	1993		57129	1 Urbis LED	Axia 16 LED 500mA	28 Watts	6.00 Metres	Galvanised Steel	
Y	7	STREET LIGHTING	SHELLEY AVENUE	GRIMSBY	525871.99	407464.07	1993		57130	1 Urbis LED	Axia 16 LED 500mA	28 Watts	6.00 Metres	Galvanised Steel	
Y	8	STREET LIGHTING	SHELLEY AVENUE	GRIMSBY	525849.53	407487.55	1993		57131	1 Urbis LED	Axia 16 LED 500mA	28 Watts	6.00 Metres	Galvanised Steel	
Y	9	STREET LIGHTING	SHELLEY AVENUE	GRIMSBY	525852.29	407518.39	1993		57132	1 Urbis LED	Axia 16 LED 500mA	28 Watts	6.00 Metres	Galvanised Steel	
Y	1	STREET LIGHTING	STAINTON DRIVE	GRIMSBY	525196.37	407432.36	1997		57993	1 Urbis LED	Teceo 40 LED 500mA	64 Watts	6.00 Metres	Galvanised Steel	
Y	2	STREET LIGHTING	STAINTON DRIVE	GRIMSBY	525164.47	407425.9	1997		57994	1 Urbis LED	Teceo 40 LED 500mA	64 Watts	6.00 Metres	Galvanised Steel	
Y	3	STREET LIGHTING	STAINTON DRIVE	GRIMSBY	525132.58	407431.66	1997		57995	1 Urbis LED	Teceo 40 LED 500mA	64 Watts	6.00 Metres	Galvanised Steel	
Y	4	STREET LIGHTING	STAINTON DRIVE	GRIMSBY	525106.75	407426.34	1997		57996	1 Urbis LED	Teceo 40 LED 500mA	64 Watts	6.00 Metres	Galvanised Steel	
Y	5	STREET LIGHTING	STAINTON DRIVE	GRIMSBY	525075.74	407420.46	1997		57997	1 Urbis LED	Teceo 40 LED 500mA	64 Watts	6.00 Metres	Galvanised Steel	
Y	6	STREET LIGHTING	STAINTON DRIVE	GRIMSBY	525047.52	407413.81	1997		57998	1 Urbis LED	Teceo 40 LED 500mA	64 Watts	6.00 Metres	Galvanised Steel	
Y	7	STREET LIGHTING	STAINTON DRIVE	GRIMSBY	525020.81	407414.19	1997		57999	1 Urbis LED	Axia 16 LED 500mA	28 Watts	5.00 Metres	Galvanised Steel	
Y	8	STREET LIGHTING	STAINTON DRIVE	GRIMSBY	525028.78	407393.06	2008		58000	1 Urbis LED	Teceo 40 LED 500mA	64 Watts	6.00 Metres	Steel	
Y	9	STREET LIGHTING	STAINTON DRIVE	GRIMSBY	525039.16	407361.29	1997		58001	1 Urbis LED	Teceo 40 LED 500mA	64 Watts	6.00 Metres	Galvanised Steel	
Y	10	STREET LIGHTING	STAINTON DRIVE	GRIMSBY	525030.94	407330.27	1997		58002	1 Urbis LED	Teceo 40 LED 500mA	64 Watts	6.00 Metres	Galvanised Steel	
Y	11	STREET LIGHTING	STAINTON DRIVE	GRIMSBY	525046	407298.31	1997		58003	1 Urbis LED	Teceo 40 LED 500mA	64 Watts	6.00 Metres	Galvanised Steel	

Y	12	STREET LIGHTING	STAINTON DRIVE	GRIMSBY	525039.92	407263.25	1997		58004	1 Urbis LED	Teceo 40 LED 500mA	64 Watts	6.00 Metres	Galvanised Steel	
Y	13	STREET LIGHTING	STAINTON DRIVE	GRIMSBY	525057.9	407232.75	1997		58005	1 Urbis LED	Teceo 40 LED 500mA	64 Watts	6.00 Metres	Galvanised Steel	
Y	14	STREET LIGHTING	STAINTON DRIVE	GRIMSBY	525054.61	407197.43	1997		58006	1 Urbis LED	Teceo 40 LED 500mA	64 Watts	6.00 Metres	Galvanised Steel	
Y	15	STREET LIGHTING	STAINTON DRIVE	GRIMSBY	525074.99	407166.99	1997		58007	1 Urbis LED	Teceo 40 LED 500mA	64 Watts	6.00 Metres	Galvanised Steel	
Y	16	STREET LIGHTING	STAINTON DRIVE	GRIMSBY	525075.29	407128.68	1997		58008	1 Urbis LED	Teceo 40 LED 500mA	64 Watts	6.00 Metres	Galvanised Steel	
Y	17	STREET LIGHTING	STAINTON DRIVE	GRIMSBY	525096.81	407102.29	1997		58009	1 Urbis LED	Teceo 40 LED 500mA	64 Watts	6.00 Metres	Galvanised Steel	
Y	18	STREET LIGHTING	STAINTON DRIVE	GRIMSBY	525098.84	407062.54	1997		58010	1 Urbis LED	Teceo 40 LED 500mA	64 Watts	6.00 Metres	Galvanised Steel	
Y	19	STREET LIGHTING	STAINTON DRIVE	GRIMSBY	525117.95	407037.29	1997		58011	1 Urbis LED	Teceo 40 LED 500mA	64 Watts	6.00 Metres	Galvanised Steel	
Y	20	STREET LIGHTING	STAINTON DRIVE	GRIMSBY	525113.27	407005.65	1997		58012	1 Urbis LED	Teceo 40 LED 500mA	64 Watts	6.00 Metres	Galvanised Steel	
Y	21	STREET LIGHTING	STAINTON DRIVE	GRIMSBY	525130.74	406974.45	1997		58013	1 Urbis LED	Teceo 40 LED 500mA	64 Watts	6.00 Metres	Galvanised Steel	
Y	22	STREET LIGHTING	STAINTON DRIVE	GRIMSBY	525123.27	406944.07	1997		58014	1 Urbis LED	Teceo 40 LED 500mA	64 Watts	6.00 Metres	Galvanised Steel	
Y	23	STREET LIGHTING	STAINTON DRIVE	GRIMSBY	525125.55	406914.2	2018	31/07/2018	58015	Urbis	Teceo 40 LED 500mA	64 Watts	8.00 Metres	Galvanised Steel	
Y	1	STREET LIGHTING	STRATFORD AVENUE	GRIMSBY	525166.83	407617.53	2007		58527	1 Urbis LED	Axia 16 LED 500mA	28 Watts	6.00 Metres	Stainless Steel	
Y	2	STREET LIGHTING	STRATFORD AVENUE	GRIMSBY	525134.84	407611.11	2007		58528	1 Urbis LED	Axia 16 LED 500mA	28 Watts	6.00 Metres	Stainless Steel	
Y	3	STREET LIGHTING	STRATFORD AVENUE	GRIMSBY	525099.39	407616.01	2007		58529	1 Urbis LED	Axia 16 LED 500mA	28 Watts	6.00 Metres	Stainless Steel	
Y	4	STREET LIGHTING	STRATFORD AVENUE	GRIMSBY	525071.96	407610.66	2007		58530	1 Urbis LED	Axia 16 LED 500mA	28 Watts	6.00 Metres	Stainless Steel	
Y	5	STREET LIGHTING	STRATFORD AVENUE	GRIMSBY	525036.59	407597.97	2007		58531	1 Urbis LED	Axia 16 LED 500mA	28 Watts	6.00 Metres	Stainless Steel	
Y	1	STREET LIGHTING	STURTON GROVE	GRIMSBY	525588.04	407627.93	1997		58548	Urbis	Axia 16 LED 350mA	19 Watts	5.00 Metres	Galvanised Steel	
Y	2	STREET LIGHTING	STURTON GROVE	GRIMSBY	525614.5	407633.25	1997		58549	Urbis	Axia 16 LED 350mA	19 Watts	5.00 Metres	Galvanised Steel	
Y	3	STREET LIGHTING	STURTON GROVE	GRIMSBY	525618.68	407617.81	1997		58550	Urbis	Axia 16 LED 350mA	19 Watts	5.00 Metres	Galvanised Steel	
Y	4	STREET LIGHTING	STURTON GROVE	GRIMSBY	525591.21	407611.99	1997		58551	Urbis	Axia 16 LED 350mA	19 Watts	5.00 Metres	Galvanised Steel	
Y	1	STREET LIGHTING	THORESWAY GROVE	GRIMSBY	525071.99	407226.88	1997		59103	Urbis	Axia 16 LED 350mA	19 Watts	5.00 Metres	Galvanised Steel	
Y	2	STREET LIGHTING	THORESWAY GROVE	GRIMSBY	525094.65	407219.03	1997		59104	Urbis	Axia 16 LED 350mA	19 Watts	5.00 Metres	Galvanised Steel	
Y	3	STREET LIGHTING	THORESWAY GROVE	GRIMSBY	525077.43	407202.32	1997		59105	Urbis	Axia 16 LED 350mA	19 Watts	5.00 Metres	Galvanised Steel	
Y	1	STREET LIGHTING	TORKSEY DRIVE	GRIMSBY	525713.06	407436.18	1999		59323	1 Urbis LED	Axia 16 LED 500mA	28 Watts	6.00 Metres	Galvanised Steel	
Y	2	STREET LIGHTING	TORKSEY DRIVE	GRIMSBY	525743.44	407432.22	1999		59324	1 Urbis LED	Axia 16 LED 500mA	28 Watts	6.00 Metres	Galvanised Steel	
Y	3	STREET LIGHTING	TORKSEY DRIVE	GRIMSBY	525773.09	407448.97	2023	01/02/2023	69199	Urbis	Axia 24 LED 500mA	28 Watts	6.00 Metres	Galvanised Steel	
Y	4	STREET LIGHTING	TORKSEY DRIVE	GRIMSBY	525797.8	407445.77	1999		59326	1 Urbis LED	Axia 16 LED 500mA	28 Watts	6.00 Metres	Galvanised Steel	
Y	5	STREET LIGHTING	TORKSEY DRIVE	GRIMSBY	525804.56	407422.65	1999		59327	1 Urbis LED	Axia 16 LED 500mA	28 Watts	6.00 Metres	Galvanised Steel	
Y	6	STREET LIGHTING	TORKSEY DRIVE	GRIMSBY	525835.13	407395.31	1996		59328	1 Urbis LED	Axia 16 LED 500mA	28 Watts	6.00 Metres	Galvanised Steel	
Y	7	STREET LIGHTING	TORKSEY DRIVE	GRIMSBY	525834.76	407373.12	1999		59329	1 Urbis LED	Axia 16 LED 500mA	28 Watts	6.00 Metres	Galvanised Steel	
Y	8	STREET LIGHTING	TORKSEY DRIVE	GRIMSBY	525847.65	407351.49	1996		59330	1 Urbis LED	Axia 16 LED 500mA	28 Watts	6.00 Metres	Galvanised Steel	
Y	9	STREET LIGHTING	TORKSEY DRIVE	GRIMSBY	525868.08	407339.89	2006		59331	1 Urbis LED	Axia 16 LED 500mA	28 Watts	6.00 Metres	Stainless Steel	
Y	10	STREET LIGHTING	TORKSEY DRIVE	GRIMSBY	525878.47	407316.87	1999		59332	1 Urbis LED	Axia 16 LED 500mA	28 Watts	6.00 Metres	Galvanised Steel	
Y	11	STREET LIGHTING	TORKSEY DRIVE	GRIMSBY	525882.63	407296.99	1996		59333	1 Urbis LED	Axia 16 LED 500mA	28 Watts	6.00 Metres	Galvanised Steel	
Y	12	STREET LIGHTING	TORKSEY DRIVE	GRIMSBY	525883.37	407264.12	1999		59334	1 Urbis LED	Axia 16 LED 500mA	28 Watts	6.00 Metres	Galvanised Steel	
Y	13	STREET LIGHTING	TORKSEY DRIVE	GRIMSBY	525871.87	407234.95	1999		59335	1 Urbis LED	Axia 16 LED 500mA	28 Watts	6.00 Metres	Galvanised Steel	
Y	1	STREET LIGHTING	TORKSEY DRIVE REAR ACCESS	GRIMSBY	525814.51	407433.62	1999		59336	Urbis	Axia 16 LED 350mA	19 Watts	6.00 Metres	Galvanised Steel	
Y	2	STREET LIGHTING	TORKSEY DRIVE REAR ACCESS	GRIMSBY	525833.87	407433.62	1999		59337	Urbis	Axia 16 LED 350mA	19 Watts	6.00 Metres	Galvanised Steel	
Y	3	STREET LIGHTING	TORKSEY DRIVE REAR ACCESS	GRIMSBY	525843.75	407416.4	1999		59338	Urbis	Axia 16 LED 350mA	19 Watts	6.00 Metres	Galvanised Steel	
Y	1	STREET LIGHTING	TOYNTON ROAD	GRIMSBY	525851.85	407325.65	1999		59388	Urbis	Axia 16 LED 350mA	19 Watts	6.00 Metres	Galvanised Steel	
Y	2	STREET LIGHTING	TOYNTON ROAD	GRIMSBY	525819.44	407324.7	1999		59389	Urbis	Axia 16 LED 350mA	19 Watts	6.00 Metres	Galvanised Steel	
Y	3	STREET LIGHTING	TOYNTON ROAD	GRIMSBY	525793.5	407305.21	1999		59390	Urbis	Axia 16 LED 350mA	19 Watts	6.00 Metres	Galvanised Steel	
Y	4	STREET LIGHTING	TOYNTON ROAD	GRIMSBY	525770.84	407310.08	1999		59391	Urbis	Axia 16 LED 350mA	19 Watts	6.00 Metres	Galvanised Steel	
Y	5	STREET LIGHTING	TOYNTON ROAD	GRIMSBY				02/06/2025	70226	Urbis	Axia 16 LED 350mA	19 Watts	6.00 Metres	Galvanised Steel	
Y	1	STREET LIGHTING	WAINFLEET ROAD	GRIMSBY	525674.53	407054.47	1997		59683	1 Urbis LED	Axia 16 LED 500mA	28 Watts	6.00 Metres	Galvanised Steel	
Y	2	STREET LIGHTING	WAINFLEET ROAD	GRIMSBY	525692.12	407030.99	1997		59684	1 Urbis LED	Axia 16 LED 500mA	28 Watts	6.00 Metres	Galvanised Steel	
Y	3	STREET LIGHTING	WAINFLEET ROAD	GRIMSBY	525692.12	407000.23	1997		59685	1 Urbis LED	Axia 16 LED 500mA	28 Watts	6.00 Metres	Galvanised Steel	
Y	4	STREET LIGHTING	WAINFLEET ROAD	GRIMSBY	525716.17	406977.64	1997		59686	1 Urbis LED	Axia 16 LED 500mA	28 Watts	6.00 Metres	Galvanised Steel	
Y	5	STREET LIGHTING	WAINFLEET ROAD	GRIMSBY	525706.29	406949.03	1997		59687	1 Urbis LED	Axia 16 LED 500mA	28 Watts	6.00 Metres	Galvanised Steel	
Y	1	STREET LIGHTING	WARWICK AVENUE	GRIMSBY	525173.61	407561.27	2001		59816	1 Urbis LED	Axia 16 LED 500mA	28 Watts	6.00 Metres	Galvanised Steel	
Y	2	STREET LIGHTING	WARWICK AVENUE	GRIMSBY	525143.53	407566.67	2001		59817	1 Urbis LED	Axia 16 LED 500mA	28 Watts	6.00 Metres	Galvanised Steel	
Y	3	STREET LIGHTING	WARWICK AVENUE	GRIMSBY	525111.2	407558.76	2001		59818	1 Urbis LED	Axia 16 LED 500mA	28 Watts	6.00 Metres	Galvanised Steel	
Y	4	STREET LIGHTING	WARWICK AVENUE	GRIMSBY	525083.64	407553.33	2002		59819	1 Urbis LED	Axia 16 LED 500mA	28 Watts	6.00 Metres	Galvanised Steel	
Y	5	STREET LIGHTING	WARWICK AVENUE	GRIMSBY	525062.41	407540.44	2002		59820	1 Urbis LED	Axia 16 LED 500mA	28 Watts	6.00 Metres	Galvanised Steel	
Y	6	STREET LIGHTING	WARWICK AVENUE	GRIMSBY	525039.64	407537.24	2002		59821	1 Urbis LED	Axia 16 LED 500mA	28 Watts	6.00 Metres	Galvanised Steel	
Y	1	STREET LIGHTING	WINCHESTER AVENUE	GRIMSBY	525176.56	407710.08	1995		60804	1 Urbis LED	Teceo 48 LED 500mA	79 Watts	8.00 Metres	Galvanised Steel	
Y	2	STREET LIGHTING	WINCHESTER AVENUE	GRIMSBY	525181.37	407680.65	1995		60805	1 Urbis LED	Teceo 48 LED 500mA	79 Watts	8.00 Metres	Galvanised Steel	
Y	3	STREET LIGHTING	WINCHESTER AVENUE	GRIMSBY	525166.83	407655.99	1995		60806	1 Urbis LED	Teceo 48 LED 500mA	79 Watts	8.00 Metres	Galvanised Steel	
Y	4	STREET LIGHTING	WINCHESTER AVENUE	GRIMSBY	525188.74	407632.33	1995		60807	1 Urbis LED	Teceo 48 LED 500mA	79 Watts	8.00 Metres	Galvanised Steel	
Y	5	STREET LIGHTING	WINCHESTER AVENUE	GRIMSBY	525193.9	407601.86	1995		60808	1 Urbis LED	Teceo 48 LED 500mA	79 Watts	8.00 Metres	Galvanised Steel	
Y	6	STREET LIGHTING	WINCHESTER AVENUE	GRIMSBY	525198.87	407571.58	1995		60809	1 Urbis LED	Teceo 48 LED 500mA	79 Watts	8.00 Metres	Galvanised Steel	
Y	7	STREET LIGHTING	WINCHESTER AVENUE	GRIMSBY	525185.61	407541.57	1995		60810	1 Urbis LED	Teceo 48 LED 500mA	79 Watts	8.00 Metres	Galvanised Steel	
Y	8	STREET LIGHTING	WINCHESTER AVENUE	GRIMSBY	525189.85	407516.34	1995		60811	1 Urbis LED	Teceo 48 LED 500mA	79 Watts	8.00 Metres	Galvanised Steel	
Y	9	STREET LIGHTING	WINCHESTER AVENUE	GRIMSBY	525211.94	407486.61	1995		60812	1 Urbis LED	Teceo 48 LED 500mA	79 Watts	8.00 Metres	Galvanised Steel	
Y	10	STREET LIGHTING	WINCHESTER AVENUE	GRIMSBY	525199.79	407457.98	1995		60813	1 Urbis LED	Teceo 48 LED 500mA	79 Watts	8.00 Metres	Galvanised Steel	
Y	11	STREET LIGHTING	WINCHESTER AVENUE	GRIMSBY	525220.96	407429.35	1995		60814	1 Urbis LED	Teceo 48 LED 500mA	79 Watts	8.00 Metres	Galvanised Steel	
Y	12	STREET LIGHTING	WINCHESTER AVENUE	GRIMSBY	525209.18	407398.97	1995		60815	1 Urbis LED	Teceo 48 LED 500mA	79 Watts	8.00 Metres	Galvanised Steel	
Y	13	STREET LIGHTING	WINCHESTER AVENUE	GRIMSBY	525213.41	407372.64	1995		60816	1 Urbis LED	Teceo 48 LED 500mA	79 Watts	8.00 Metres	Galvanised Steel	
Y	14	STREET LIGHTING	WINCHESTER AVENUE	GRIMSBY	525234.4	407347.51	1995		60817	1 Urbis LED	Teceo 48 LED 500mA	79 Watts	8.00 Metres	Galvanised Steel	
Y	15	STREET LIGHTING	WINCHESTER AVENUE	GRIMSBY	525238.82	407318.51	1995		60818	1 Urbis LED	Teceo 48 LED 500mA	79 Watts	8.00 Metres	Galvanised Steel	
Y	16	STREET LIGHTING	WINCHESTER AVENUE	GRIMSBY	525227.04	407286.57	1995		60819	1 Urbis LED	Teceo 48 LED 500mA	79 Watts	8.00 Metres	Galvanised Steel	
Y	17	STREET LIGHTING	WINCHESTER AVENUE	GRIMSBY	525248.21	407261.07	1995		60820	1 Urbis LED	Teceo 48 LED 500mA	79 Watts	8.00 Metres	Galvanised Steel	
Y	18	STREET LIGHTING	WINCHESTER AVENUE	GRIMSBY	525236.79	407227.74	1995		60821	1 Urbis LED	Teceo 48 LED 500mA	79 Watts	8.00 Metres	Galvanised Steel	
Y	19	STREET LIGHTING	WINCHESTER AVENUE	GRIMSBY	525255.44	407206.39	1995		60822	1 Urbis LED	Teceo 48 LED 500mA	79 Watts	8.00 Metres	Galvanised Steel	
Y	20	STREET LIGHTING	WINCHESTER AVENUE	GRIMSBY	525246.92	407171.96	1995		60823	1 Urbis LED	Teceo 48 LED 500mA	79 Watts	8.00 Metres	Galvanised Steel	
Y	21	STREET LIGHTING	WINCHESTER AVENUE	GRIMSBY	525269.59	407146.92	1995		60824	1 Urbis LED	Teceo 48 LED 500mA	79 Watts	8.00 Metres	Galvanised Steel	
Y	22	STREET LIGHTING	WINCHESTER AVENUE	GRIMSBY	525281.13	407122.53	1995		60825	1 Urbis LED	Teceo 48 LED 500mA	79 Watts	8.00 Metres	Galvanised Steel	
Y	23	STREET LIGHTING	WINCHESTER AVENUE	GRIMSBY	525293.79	407100.95	1995		60826	1 Urbis LED	Teceo 48 LED 500mA	79 Watts	8.00 Metres	Galvanised Steel	
Y	24	STREET LIGHTING	WINCHESTER AVENUE	GRIMSBY	525308.73	407081.27	1995		60827	1 Urbis LED	Teceo 48 LED 500mA	79 Watts	8.00 Metres	Galvanised Steel	
Y	25	STREET LIGHTING	WINCHESTER AVENUE	GRIMSBY	525331.51	407058.3	1995		60828	1 Urbis LED	Teceo 48 LED 500mA	79 Watts	8.00 Metres	Galvanised Steel	
Y	26	STREET LIGHTING	WINCHESTER AVENUE	GRIMSBY	525345.69	407029	1995		60829	1 Urbis LED	Teceo 48 LED 500mA	79 Watts	8.00 Metres	Galvanised Steel	
Y	27	STREET LIGHTING	WINCHESTER AVENUE	GRIMSBY	525378.09	407025.52	1995		60830	1 Urbis LED	Teceo 48 LED 500mA	79 Watts	8.00 Metres	Galvanised Steel	
Y	28	STREET LIGHTING	WINCHESTER AVENUE	GRIMSBY	525399.87	406999.76	1995		60831	1 Urbis LED	Teceo 48 LED 500mA	79 Watts	8.00 Metres	Galvanised Steel	
Y	29	STREET LIGHTING	WINCHESTER AVENUE	GRIMSBY	525429.49	407005.52	1995		60832	1 Urbis LED	Teceo 48 LED 500mA	79 Watts	8.00 Metres	Galvanised Steel	
Y	30	STREET LIGHTING	WINCHESTER AVENUE	GRIMSBY	525448.73	406986.85	1995		60833	1 Urbis LED	Teceo 48 LED 500mA	79 Watts	8.00 Metres	Galvanised Steel	
Y	31	STREET LIGHTING	WINCHESTER AVENUE	GRIMSBY	525477.59	406983.81	1995		60834	1 Urbis LED	Teceo 48 LED 500mA	79 Watts	8.00 Metres	Galvanised Steel	
Y	32	STREET LIGHTING	WINCHESTER AVENUE	GRIMSBY	525507.84	406999.51	1995		60835	1 Urbis LED	Teceo 48 LED 500mA	79 Watts	8.00 Metres	Galvanised Steel	
Y	33	STREET LIGHTING	WINCHESTER AVENUE	GRIMSBY	525538.34	406988.56	1995		60836	1 Urbis LED	Teceo 48 LED 500mA	79 Watts	8.00 Metres	Galvanised Steel	
Y	34	STREET LIGHTING	WINCHESTER AVENUE	GRIMSBY	525564.8	407010.52	1995		60837	1 Urbis LED	Teceo 48 LED 500mA	79 Watts	8.00 Metres	Galvanised Steel	
Y	35	STREET LIGHTING	WINCHESTER AVENUE	GRIMSBY	525596.19	407006.91	1995		60838	1 Urbis LED	Teceo 48 LED 500mA	79 Watts	8.00 Metres	Galvanised Steel	
Y	36	STREET LIGHTING	WINCHESTER AVENUE	GRIMSBY	525604.1	407001.08	2011		60839	Urbis	Axia 8 LED 350mA	10 Watts	6.00 Metres	Steel	
Y	37	STREET LIGHTING	WINCHESTER AVENUE	GRIMSBY	525621.28	406988.19	2011		60840	Urbis	Axia 8 LED 350mA	10 Watts	6.00 Metres	Steel	
Y	38	STREET LIGHTING	WINCHESTER AVENUE	GRIMSBY	525621.84	407010.6	2011		60841	Urbis	Axia 8 LED 350mA	10 Watts	6.00 Metres	Steel	
Y	39	STREET LIGHTING	WINCHESTER AVENUE	GRIMSBY	525614.75	407034.02	1995		60842	1 Urbis LED	Teceo 48 LED 500mA	79 Watts	8.00 Metres	Galvanised Steel	
Y	40	STREET LIGHTING	WINCHESTER AVENUE	GRIMSBY	525635.64	407049.02	1995		60843	1 Urbis LED	Teceo 48 LED 500mA	79 Watts	8.00 Metres	Galvanised Steel	
Y	41	STREET LIGHTING	WINCHESTER AVENUE	GRIMSBY	525653.48	407064.65	1995		60844	1 Urbis LED	Teceo 48 LED 500mA	79 Watts	8.00 Metres	Galvanised Steel	
Y	42	STREET LIGHTING	WINCHESTER AVENUE	GRIMSBY	525675.53	407087.59	2021	02/09/2021	68445	Urbis	Teceo 48 LED 500mA	79 Watts	8.00 Metres	Galvanised Steel	
Y	43	STREET LIGHTING	WINCHESTER AVENUE	GRIMSBY	525705.38	407106.42	1995		60846	1 Urbis LED	Teceo 48 LED 500mA	79 Watts	8.00 Metres	Galvanised Steel	
Y	44	STREET LIGHTING	WINCHESTER AVENUE	GRIMSBY	525704.88	407136.42	1995		60847	1 Urbis LED	Teceo 48 LED 500mA	79 Watts	8.00 Metres	Galvanised Steel	
Y	45	STREET LIGHTING	WINCHESTER AVENUE	GRIMSBY	525726.78	407152.18	1995		60848	1 Urbis LED	Teceo 48 LED 500mA	79 Watts	8.00 Metres	Galvanised Steel	
Y	46	STREET LIGHTING	WINCHESTER AVENUE	GRIMSBY	525720.57	407185.22	1995		60849	1 Urbis LED	Teceo 48 LED 500mA	79 Watts	8.00 Metres	Galvanised Steel	
Y	47	STREET LIGHTING	WINCHESTER AVENUE	GRIMSBY	525740.07	407215.03	1995		60850	1 Urbis LED	Teceo 48 LED 500mA	79 Watts	8.00 Metres	Galvanised Steel	
Y	48	STREET LIGHTING	WINCHESTER AVENUE	GRIMSBY	525725.39	407238.7	1995		60851	1 Urbis LED	Teceo 48 LED 500mA	79 Watts	8.00 Metres	Galvanised Steel	
Y	49	STREET LIGHTING	WINCHESTER AVENUE	GRIMSBY	525738.04	407272.31	1995		60852	1 Urbis LED	Teceo 48 LED 500mA	79 Watts	8.00 Metres	Galvanised Steel	
Y	50	STREET LIGHTING	WINCHESTER AVENUE	GRIMSBY	525718.17	407294.34	1995		60853	1 Urbis LED	Teceo 48 LED 500mA	79 Watts	8.00 Metres	Galvanised Steel	
Y	51	STREET LIGHTING	WINCHESTER AVENUE	GRIMSBY	525726.65	407325.16	1995		60854	Urbis	AXIA 3.2 32 LED 630 mA	62 Watts	8.00 Metres	Galvanised Steel	
Y	52	STREET LIGHTING	WINCHESTER AVENUE	GRIMSBY	525720.7	407352.37	1995		60855	1 Urbis LED	Teceo 48 LED 500mA	79 Watts	8.00 Metres	Galvanised Steel	
Y	53	STREET LIGHTING	WINCHESTER AVENUE	GRIMSBY	525698.86	407380.93	1995		60856	Urbis	AXIA 3.2 32 LED 630 mA	62 Watts	8.00 Metres	Galvanised Steel	
Y	54	STREET LIGHTING	WINCHESTER AVENUE	GRIMSBY	525692.93	407409.26	1995		60857	1 Urbis LED	Teceo 48 LED 500mA	79 Watts	8.00 Metres	Galvanised Steel	

Y	55	STREET LIGHTING	WINCHESTER AVENUE	GRIMSBY	525687.62	407432.87	1995		60858	1 Urbis LED	Teceo 48 LED 500mA	79 Watts	8.00 Metres	Galvanised Steel	
Y	56	STREET LIGHTING	WINCHESTER AVENUE	GRIMSBY	525696.86	407463.25	1995		60859	1 Urbis LED	Teceo 48 LED 500mA	79 Watts	8.00 Metres	Galvanised Steel	
Y	57	STREET LIGHTING	WINCHESTER AVENUE	GRIMSBY	525691.42	407489.01	2014		60860	1 Urbis LED	Teceo 48 LED 500mA	79 Watts	8.00 Metres	Galvanised Steel	
Y	1	STREET LIGHTING	WINTHORPE ROAD	GRIMSBY	525924.21	407202.42	1993		60967	1 Urbis LED	Axia 16 LED 500mA	28 Watts	6.00 Metres	Galvanised Steel	
Y	2	STREET LIGHTING	WINTHORPE ROAD	GRIMSBY	525915.48	407177.86	1993		60968	1 Urbis LED	Axia 16 LED 500mA	28 Watts	6.00 Metres	Galvanised Steel	
Y	3	STREET LIGHTING	WINTHORPE ROAD	GRIMSBY	525924.6	407148.62	1993		60969	1 Urbis LED	Axia 16 LED 500mA	28 Watts	6.00 Metres	Galvanised Steel	
Y	4	STREET LIGHTING	WINTHORPE ROAD	GRIMSBY	525918.39	407125.9	1993		60970	1 Urbis LED	Axia 16 LED 500mA	28 Watts	6.00 Metres	Galvanised Steel	
Y	5	STREET LIGHTING	WINTHORPE ROAD	GRIMSBY	525927.38	407096.92	1993		60971	1 Urbis LED	Axia 16 LED 500mA	28 Watts	6.00 Metres	Galvanised Steel	
Y	6	STREET LIGHTING	WINTHORPE ROAD	GRIMSBY	525920.93	407072.05	1993		60972	1 Urbis LED	Axia 16 LED 500mA	28 Watts	6.00 Metres	Galvanised Steel	
Y	7	STREET LIGHTING	WINTHORPE ROAD	GRIMSBY	525921.79	407050.41	2019	04/10/2019	67626	Urbis	Teceo 16 LED 500mA	28 Watts	6.00 Metres	Galvanised Steel	
Y	8	STREET LIGHTING	WINTHORPE ROAD	GRIMSBY	525931.69	407019.45	2000		60974	1 Urbis LED	Axia 16 LED 500mA	28 Watts	6.00 Metres	Galvanised Steel	
Y	9	STREET LIGHTING	WINTHORPE ROAD	GRIMSBY	525933.33	406990.15	1993		60975	1 Urbis LED	Axia 16 LED 500mA	28 Watts	6.00 Metres	Galvanised Steel	
Y	10	STREET LIGHTING	WINTHORPE ROAD	GRIMSBY	525925.23	406958.89	1993		60976	1 Urbis LED	Axia 16 LED 500mA	28 Watts	6.00 Metres	Galvanised Steel	
Y	1	STREET LIGHTING	WOOTTON ROAD	GRIMSBY	525577.44	407373.7	1996		61183	1 Urbis LED	Teceo 24 LED 500mA	40 Watts	6.00 Metres	Galvanised Steel	
Y	2	STREET LIGHTING	WOOTTON ROAD	GRIMSBY	525542.26	407377.31	1996		61184	1 Urbis LED	Teceo 24 LED 500mA	40 Watts	6.00 Metres	Galvanised Steel	
Y	3	STREET LIGHTING	WOOTTON ROAD	GRIMSBY	525504.79	407358.96	1996		61185	1 Urbis LED	Teceo 24 LED 500mA	40 Watts	6.00 Metres	Galvanised Steel	
Y	4	STREET LIGHTING	WOOTTON ROAD	GRIMSBY	525462.13	407360.1	1996		61186	1 Urbis LED	Teceo 24 LED 500mA	40 Watts	6.00 Metres	Galvanised Steel	
Y	5	STREET LIGHTING	WOOTTON ROAD	GRIMSBY	525435.55	407344.18	2003		61187	1 Urbis LED	Teceo 24 LED 500mA	40 Watts	6.00 Metres	Stainless Steel	
Y	6	STREET LIGHTING	WOOTTON ROAD	GRIMSBY	525408.09	407348.64	1996		61188	1 Urbis LED	Teceo 24 LED 500mA	40 Watts	6.00 Metres	Galvanised Steel	
Y	7	STREET LIGHTING	WOOTTON ROAD	GRIMSBY	525385.68	407343.9	2017	22/03/2017	61189	1 Urbis LED	Teceo 24 LED 500mA	40 Watts	6.00 Metres	Galvanised Steel	
Y	8	STREET LIGHTING	WOOTTON ROAD	GRIMSBY	525352.14	407336.87	1996		61190	1 Urbis LED	Teceo 24 LED 500mA	40 Watts	6.00 Metres	Galvanised Steel	
Y	1	STREET LIGHTING	WYMARK VIEW	GRIMSBY	524969.78	407244.78	1996		61314	Urbis	Axia 16 LED 350mA	19 Watts	5.00 Metres	Galvanised Steel	
Y	2	STREET LIGHTING	WYMARK VIEW	GRIMSBY	524951.55	407244.33	1996		61315	Urbis	Axia 16 LED 350mA	19 Watts	5.00 Metres	Galvanised Steel	
Y	3	STREET LIGHTING	WYMARK VIEW	GRIMSBY	524941.8	407258.01	1996		61316	Urbis	Axia 8 LED 350mA	10 Watts	5.00 Metres	Galvanised Steel	
Y	4	STREET LIGHTING	WYMARK VIEW	GRIMSBY	524919.91	407243.96	1996		61317	Urbis	Axia 8 LED 350mA	10 Watts	5.00 Metres	Galvanised Steel	
Y	5	STREET LIGHTING	WYMARK VIEW	GRIMSBY	524911.04	407249.4	1996		61318	Urbis	Axia 8 LED 350mA	10 Watts	5.00 Metres	Galvanised Steel	
Y	6	STREET LIGHTING	WYMARK VIEW	GRIMSBY	524912.06	407223.01	1996		61319	Urbis	Axia 8 LED 350mA	10 Watts	5.00 Metres	Galvanised Steel	
Y	7	STREET LIGHTING	WYMARK VIEW	GRIMSBY	524912.69	407205.41	1996		61320	Urbis	Axia 8 LED 350mA	10 Watts	5.00 Metres	Galvanised Steel	
Y	8	STREET LIGHTING	WYMARK VIEW	GRIMSBY	524931.17	407206.55	1996		61321	Urbis	Axia 8 LED 350mA	10 Watts	5.00 Metres	Galvanised Steel	
Y	9	STREET LIGHTING	WYMARK VIEW	GRIMSBY	524922.82	407229.46	1996		61322	Urbis	Axia 8 LED 350mA	10 Watts	5.00 Metres	Galvanised Steel	
Y	10	STREET LIGHTING	WYMARK VIEW	GRIMSBY	524953.2	407229.91	1996		61323	Urbis	Axia 16 LED 350mA	19 Watts	5.00 Metres	Galvanised Steel	
Y	11	STREET LIGHTING	WYMARK VIEW	GRIMSBY	524959.27	407223.07	1996		61324	Urbis	Axia 8 LED 350mA	10 Watts	5.00 Metres	Galvanised Steel	
Y	12	STREET LIGHTING	WYMARK VIEW	GRIMSBY	524953.7	407206.99	1996		61325	Urbis	Axia 8 LED 350mA	10 Watts	5.00 Metres	Galvanised Steel	
Y	1	STREET LIGHTING	WITHERN ROAD	GRIMSBY	525144.33	407415.08	1995		61022	1 Urbis LED	Axia 16 LED 500mA	28 Watts	6.00 Metres	Galvanised Steel	
Y	2	STREET LIGHTING	WITHERN ROAD	GRIMSBY	525137.88	407383.97	1995		61023	1 Urbis LED	Axia 16 LED 500mA	28 Watts	6.00 Metres	Galvanised Steel	
Y	3	STREET LIGHTING	WITHERN ROAD	GRIMSBY	525151.14	407354.78	1995		61024	1 Urbis LED	Axia 16 LED 500mA	28 Watts	6.00 Metres	Galvanised Steel	
Y	4	STREET LIGHTING	WITHERN ROAD	GRIMSBY	525143.77	407328.36	1995		61025	1 Urbis LED	Axia 16 LED 500mA	28 Watts	6.00 Metres	Galvanised Steel	
Y	5	STREET LIGHTING	WITHERN ROAD	GRIMSBY	525157.03	407299.92	1995		61026	1 Urbis LED	Axia 16 LED 500mA	28 Watts	6.00 Metres	Galvanised Steel	
Y	6	STREET LIGHTING	WITHERN ROAD	GRIMSBY	525150.22	407271.47	1995		61027	1 Urbis LED	Axia 16 LED 500mA	28 Watts	6.00 Metres	Galvanised Steel	
Y	7	STREET LIGHTING	WITHERN ROAD	GRIMSBY	525163.84	407242.11	1995		61028	1 Urbis LED	Axia 16 LED 500mA	28 Watts	6.00 Metres	Galvanised Steel	
Y	8	STREET LIGHTING	WITHERN ROAD	GRIMSBY	525156.29	407214.95	1995		61029	1 Urbis LED	Axia 16 LED 500mA	28 Watts	6.00 Metres	Galvanised Steel	
Y	9	STREET LIGHTING	WITHERN ROAD	GRIMSBY	525152.61	407188.16	1995		61030	1 Urbis LED	Axia 16 LED 500mA	28 Watts	5.00 Metres	Galvanised Steel	
Y	10	STREET LIGHTING	WITHERN ROAD	GRIMSBY	525171.39	407191.48	1995		61031	1 Urbis LED	Axia 16 LED 500mA	28 Watts	6.00 Metres	Galvanised Steel	
Y	11	STREET LIGHTING	WITHERN ROAD	GRIMSBY	525176.55	407174.45	1995		61032	1 Urbis LED	Axia 16 LED 500mA	28 Watts	5.00 Metres	Galvanised Steel	
Y	12	STREET LIGHTING	WITHERN ROAD	GRIMSBY	525151.69	407165.06	1995		61033	1 Urbis LED	Axia 16 LED 500mA	28 Watts	6.00 Metres	Galvanised Steel	
Y	13	STREET LIGHTING	WITHERN ROAD	GRIMSBY	525122.42	407159.62	1995		61034	1 Urbis LED	Axia 16 LED 500mA	28 Watts	6.00 Metres	Galvanised Steel	
Y	14	STREET LIGHTING	WITHERN ROAD	GRIMSBY	525096.09	407144.25	1995		61035	1 Urbis LED	Axia 16 LED 500mA	28 Watts	6.00 Metres	Galvanised Steel	
Y	1	STREET LIGHTING	SCAWBY ROAD	GRIMSBY	525247.02	407141.6	1997		56742	1 Urbis LED	Axia 16 LED 500mA	28 Watts	6.00 Metres	Galvanised Steel	
Y	2	STREET LIGHTING	SCAWBY ROAD	GRIMSBY	525214.61	407124.83	1997		56743	1 Urbis LED	Axia 16 LED 500mA	28 Watts	6.00 Metres	Galvanised Steel	
Y	3	STREET LIGHTING	SCAWBY ROAD	GRIMSBY	525184.62	407107.42	1997		56744	1 Urbis LED	Axia 16 LED 500mA	28 Watts	6.00 Metres	Galvanised Steel	
Y	4	STREET LIGHTING	SCAWBY ROAD	GRIMSBY	525150.06	407086.6	1997		56745	1 Urbis LED	Axia 16 LED 500mA	28 Watts	6.00 Metres	Galvanised Steel	
Y	5	STREET LIGHTING	SCAWBY ROAD	GRIMSBY	525114.24	407076.54	1997		56746	1 Urbis LED	Axia 16 LED 500mA	28 Watts	6.00 Metres	Galvanised Steel	
Y	1	STREET LIGHTING	TALLERT WAY	GRIMSBY	524835.11	407122.93	1995		58733	Urbis	Axia 16 LED 350mA	19 Watts	5.00 Metres	Galvanised Steel	
Y	2	STREET LIGHTING	TALLERT WAY	GRIMSBY	524825.62	407137.11	1995		58734	Urbis	Axia 16 LED 350mA	19 Watts	6.00 Metres	Galvanised Steel	
Y	3	STREET LIGHTING	TALLERT WAY	GRIMSBY	524817.52	407154.77	1995		58735	Urbis	Axia 16 LED 350mA	19 Watts	5.00 Metres	Galvanised Steel	
Y	4	STREET LIGHTING	TALLERT WAY	GRIMSBY	524840.68	407145.72	1995		58736	Urbis	Axia 16 LED 350mA	19 Watts	5.00 Metres	Galvanised Steel	
Y	5	STREET LIGHTING	TALLERT WAY	GRIMSBY	524859.45	407137.6	2021	22/02/2021	68306	Urbis	Axia 16 LED 350mA	19 Watts	6.00 Metres	Galvanised Steel	
Y	6	STREET LIGHTING	TALLERT WAY	GRIMSBY	524862.58	407157.17	1995		58738	Urbis	Axia 16 LED 350mA	19 Watts	5.00 Metres	Galvanised Steel	
Y	7	STREET LIGHTING	TALLERT WAY	GRIMSBY	524897.52	407125.09	1995		58739	Urbis	Axia 16 LED 350mA	19 Watts	5.00 Metres	Galvanised Steel	
Y	8	STREET LIGHTING	TALLERT WAY	GRIMSBY	524899.92	407145.47	1995		58740	Urbis	Axia 16 LED 350mA	19 Watts	5.00 Metres	Galvanised Steel	
Y	1	STREET LIGHTING	HATTON GROVE	GRIMSBY	525858.88	407141.89	1996		50300	Urbis	Axia 16 LED 350mA	19 Watts	5.00 Metres	Galvanised Steel	
Y	2	STREET LIGHTING	HATTON GROVE	GRIMSBY	525863.31	407088.48	1996		50301	Urbis	Axia 16 LED 350mA	19 Watts	5.00 Metres	Galvanised Steel	
Y	3	STREET LIGHTING	HATTON GROVE	GRIMSBY	525848.12	407075.76	1996		50302	Urbis	Axia 16 LED 350mA	19 Watts	5.00 Metres	Galvanised Steel	
Y	4	STREET LIGHTING	HATTON GROVE	GRIMSBY	525837.11	407091.26	1996		50303	Urbis	Axia 16 LED 350mA	19 Watts	5.00 Metres	Galvanised Steel	
Y	5	STREET LIGHTING	HATTON GROVE	GRIMSBY	525847.61	407109.68	1996		50304	Urbis	Axia 16 LED 350mA	19 Watts	5.00 Metres	Galvanised Steel	
Y	1	STREET LIGHTING	KIRKBY GROVE	GRIMSBY	525341.11	407146.08	1996		51888	Urbis	Axia 16 LED 350mA	19 Watts	6.00 Metres	Galvanised Steel	
Y	2	STREET LIGHTING	KIRKBY GROVE	GRIMSBY	525327.44	407162.54	1996		51889	Urbis	Axia 16 LED 350mA	19 Watts	6.00 Metres	Galvanised Steel	
Y	3	STREET LIGHTING	KIRKBY GROVE	GRIMSBY	525345.04	407171.78	1996		51890	Urbis	Axia 16 LED 350mA	19 Watts	6.00 Metres	Galvanised Steel	
Y	1	STREET LIGHTING	SUTCLIFFE AVENUE	GRIMSBY	526500.94	407524.62	1994		58610	1 Urbis LED	Teceo 48 LED 500mA	79 Watts	8.00 Metres	Galvanised Steel	
Y	2	STREET LIGHTING	SUTCLIFFE AVENUE	GRIMSBY	526474.61	407516.58	1994		58611	1 Urbis LED	Teceo 48 LED 500mA	79 Watts	8.00 Metres	Galvanised Steel	
Y	3	STREET LIGHTING	SUTCLIFFE AVENUE	GRIMSBY	526447.27	407508.67	1994		58612	1 Urbis LED	Teceo 48 LED 500mA	79 Watts	8.00 Metres	Galvanised Steel	
Y	4	STREET LIGHTING	SUTCLIFFE AVENUE	GRIMSBY	526419.3	407488.86	2016	18/07/2016	58613	1 Urbis LED	Teceo 48 LED 500mA	79 Watts	8.00 Metres	Galvanised Steel	
Y	5	STREET LIGHTING	SUTCLIFFE AVENUE	GRIMSBY	526393.35	407491.08	1994		58614	Urbis	AXIA 3.2 32 LED 630 mA	62 Watts	8.00 Metres	Galvanised Steel	
Y	6	STREET LIGHTING	SUTCLIFFE AVENUE	GRIMSBY	526375.25	407514.17	1994		58615	1 Urbis LED	Teceo 48 LED 500mA	79 Watts	8.00 Metres	Galvanised Steel	
Y	7	STREET LIGHTING	SUTCLIFFE AVENUE	GRIMSBY	526344.23	407512.91	1994		58616	1 Urbis LED	Teceo 48 LED 500mA	79 Watts	8.00 Metres	Galvanised Steel	
Y	8	STREET LIGHTING	SUTCLIFFE AVENUE	GRIMSBY	526312.97	407528.35	1994		58617	1 Urbis LED	Teceo 48 LED 500mA	79 Watts	8.00 Metres	Galvanised Steel	
Y	9	STREET LIGHTING	SUTCLIFFE AVENUE	GRIMSBY	526287.4	407540.88	1994		58618	1 Urbis LED	Teceo 48 LED 500mA	79 Watts	8.00 Metres	Galvanised Steel	
Y	10	STREET LIGHTING	SUTCLIFFE AVENUE	GRIMSBY	526268.16	407565.63	1994		58619	1 Urbis LED	Teceo 48 LED 500mA	79 Watts	8.00 Metres	Galvanised Steel	
Y	11	STREET LIGHTING	SUTCLIFFE AVENUE	GRIMSBY	526244.11	407558.35	1994		58620	Urbis	AXIA 3.2 32 LED 630 mA	62 Watts	8.00 Metres	Galvanised Steel	
Y	12	STREET LIGHTING	SUTCLIFFE AVENUE	GRIMSBY	526231.79	407578.52	2020	20/11/2020	68158	Urbis	Teceo 48 LED 700mA	104 Watts	8.00 Metres	Galvanised Steel	
Y	13	STREET LIGHTING	SUTCLIFFE AVENUE	GRIMSBY	526193.35	407570.12	1994		58622	Urbis	AXIA 3.2 32 LED 630 mA	62 Watts	8.00 Metres	Galvanised Steel	
Y	14	STREET LIGHTING	SUTCLIFFE AVENUE	GRIMSBY	526169.93	407588.6	1994		58623	Urbis	AXIA 3.2 32 LED 630 mA	62 Watts	8.00 Metres	Galvanised Steel	
Y	15	STREET LIGHTING	SUTCLIFFE AVENUE	GRIMSBY	526134.49	407576.89	1994		58624	Urbis	AXIA 3.2 32 LED 630 mA	62 Watts	8.00 Metres	Galvanised Steel	
Y	16	STREET LIGHTING	SUTCLIFFE AVENUE	GRIMSBY	526106.89	407580.12	1994		58625	Urbis	AXIA 3.2 32 LED 630 mA	62 Watts	8.00 Metres	Galvanised Steel	
Y	17	STREET LIGHTING	SUTCLIFFE AVENUE	GRIMSBY	526086.01	407598.28	1994		58626	1 Urbis LED	Teceo 48 LED 500mA	79 Watts	8.00 Metres	Galvanised Steel	
Y	18	STREET LIGHTING	SUTCLIFFE AVENUE	GRIMSBY	526056.52	407586.82	1994		58627	Urbis	AXIA 3.2 32 LED 630 mA	62 Watts	8.00 Metres	Galvanised Steel	
Y	19	STREET LIGHTING	SUTCLIFFE AVENUE	GRIMSBY	526037.02	407602.14	1994		58628	1 Urbis LED	Teceo 48 LED 500mA	79 Watts	8.00 Metres	Galvanised Steel	
Y	20	STREET LIGHTING	SUTCLIFFE AVENUE	GRIMSBY	525980.73	407571.72	1994		58629	1 Urbis LED	Teceo 48 LED 500mA	79 Watts	8.00 Metres	Galvanised Steel	
Y	21	STREET LIGHTING	SUTCLIFFE AVENUE	GRIMSBY	525948.88	407570.62	1994		58630	1 Urbis LED	Teceo 48 LED 500mA	79 Watts	8.00 Metres	Galvanised Steel	
Y	22	STREET LIGHTING	SUTCLIFFE AVENUE	GRIMSBY	525925.5	407560.03	1994		58631	1 Urbis LED	Teceo 48 LED 500mA	79 Watts	8.00 Metres	Galvanised Steel	
Y	23	STREET LIGHTING	SUTCLIFFE AVENUE	GRIMSBY	525899.91	407553.31	1994		58632	1 Urbis LED	Teceo 48 LED 500mA	79 Watts	8.00 Metres	Galvanised Steel	
Y	24	STREET LIGHTING	SUTCLIFFE AVENUE	GRIMSBY	525876.34	407533.24	1994		58633	1 Urbis LED	Teceo 48 LED 500mA	79 Watts	8.00 Metres	Galvanised Steel	
Y	25	STREET LIGHTING	SUTCLIFFE AVENUE	GRIMSBY	525843.57	407541.06	1994		58634	1 Urbis LED	Teceo 48 LED 500mA	79 Watts	8.00 Metres	Galvanised Steel	
Y	26	STREET LIGHTING	SUTCLIFFE AVENUE	GRIMSBY	525820.37	407521.36	1994		58635	1 Urbis LED	Teceo 48 LED 500mA	79 Watts	8.00 Metres	Galvanised Steel	
Y	27	STREET LIGHTING	SUTCLIFFE AVENUE	GRIMSBY	525796.07	407515.93	1994		58636	1 Urbis LED	Teceo 48 LED 500mA	79 Watts	8.00 Metres	Galvanised Steel	
Y	28	STREET LIGHTING	SUTCLIFFE AVENUE	GRIMSBY	525768.27	407510.04	1994		58637	1 Urbis LED	Teceo 48 LED 500mA	79 Watts	8.00 Metres	Galvanised Steel	
Y	29	STREET LIGHTING	SUTCLIFFE AVENUE	GRIMSBY	525740.46	407504.06	1994		58638	1 Urbis LED	Teceo 48 LED 500mA	79 Watts	8.00 Metres	Galvanised Steel	
Y	30	STREET LIGHTING	SUTCLIFFE AVENUE	GRIMSBY	525712.29	407497.8	1994		58639	1 Urbis LED	Teceo 48 LED 500mA	79 Watts	8.00 Metres	Galvanised Steel	
Y	31	STREET LIGHTING	SUTCLIFFE AVENUE	GRIMSBY	525679.71	407505.8	1994		58640	1 Urbis LED	Teceo 48 LED 500mA	79 Watts	8.00 Metres	Galvanised Steel	
Y	32	STREET LIGHTING	SUTCLIFFE AVENUE	GRIMSBY	525659.8	407486.75	1994		58641	1 Urbis LED	Teceo 48 LED 500mA	79 Watts	8.00 Metres	Galvanised Steel	
Y	33	STREET LIGHTING	SUTCLIFFE AVENUE	GRIMSBY	525632.21	407496.62	1994		58642	1 Urbis LED	Teceo 48 LED 500mA	79 Watts	8.00 Metres	Galvanised Steel	
Y	34	STREET LIGHTING	SUTCLIFFE AVENUE	GRIMSBY	525604.74	407475.1	1994		58643	Urbis	AXIA 3.2 32 LED 630 mA	62 Watts	8.00 Metres	Galvanised Steel	
Y	35	STREET LIGHTING	SUTCLIFFE AVENUE	GRIMSBY	525579.55	407485.29	1994		58644	1 Urbis LED	Teceo 48 LED 500mA	79 Watts	8.00 Metres	Galvanised Steel	
Y	36	STREET LIGHTING	SUTCLIFFE AVENUE	GRIMSBY	525551.32	407479.28	1994		58645	1 Urbis LED	Teceo 48 LED 500mA	79 Watts	8.00 Metres	Galvanised Steel	
Y	37	STREET LIGHTING	SUTCLIFFE AVENUE	GRIMSBY	525524.11	407473.27	1994		58646	1 Urbis LED	Teceo 48 LED 500mA	79 Watts	8.00 Metres	Galvanised Steel	
Y	38	STREET LIGHTING	SUTCLIFFE AVENUE	GRIMSBY	525495.75	407467.13	1994		58647	1 Urbis LED	Teceo 48 LED 500mA	79 Watts	8.00 Metres	Galvanised Steel	
Y	39	STREET LIGHTING	SUTCLIFFE AVENUE	GRIMSBY	525469.81	407461.56	1994		58648	1 Urbis LED	Teceo 48 LED 500mA	79 Watts	8.00 Metres	Galvanised Steel	
Y	40	STREET LIGHTING	SUTCLIFFE AVENUE	GRIMSBY	525440.08	407455.79	1994		58649	1 Urbis LED	Teceo 48 LED 500mA	79 Watts	8.00 Metres	Galvanised Steel	
Y	41	STREET LIGHTING	SUTCLIFFE AVENUE	GRIMSBY	525415.4	407450.16	1994		58650	1 Urbis LED	Teceo 48 LED 500mA	79 Watts	8.00 Metres	Galvanised Steel	
Y	42	STREET LIGHTING	SUTCLIFFE AVENUE	GRIMSBY	525389.32	407444.59	1994		58651	1 Urbis LED	Teceo 48 LED 500mA	79 Watts	8.00 Metres	Galvanised Steel	

Y	43	STREET LIGHTING	SUTCLIFFE AVENUE	GRIMSBY	525365.65	407424.91	1994		58652	1 Urbis LED	Teceo 48 LED 500mA	79 Watts	8.00 Metres	Galvanised Steel	
Y	44	STREET LIGHTING	SUTCLIFFE AVENUE	GRIMSBY	525336.67	407433.7	1994		58653	Urbis	AXIA 3.2 32 LED 630 mA	62 Watts	8.00 Metres	Galvanised Steel	
Y	45	STREET LIGHTING	SUTCLIFFE AVENUE	GRIMSBY	525310.09	407428.13	1994		58654	Urbis	AXIA 3.2 32 LED 630 mA	62 Watts	8.00 Metres	Galvanised Steel	
Y	46	STREET LIGHTING	SUTCLIFFE AVENUE	GRIMSBY	525286.16	407407.8	1994		58655	1 Urbis LED	Teceo 48 LED 500mA	79 Watts	8.00 Metres	Galvanised Steel	
Y	47	STREET LIGHTING	SUTCLIFFE AVENUE	GRIMSBY	525258.95	407401.98	1994		58656	Urbis	AXIA 3.2 32 LED 630 mA	62 Watts	8.00 Metres	Galvanised Steel	
Y	48	STREET LIGHTING	SUTCLIFFE AVENUE	GRIMSBY	525230.09	407411.47	1994		58657	Urbis	AXIA 3.2 32 LED 630 mA	62 Watts	8.00 Metres	Galvanised Steel	
Y	6	STREET LIGHTING	SUTCLIFFE AVENUE COMMUNITY	GRIMSBY	525517.83	407411.76	2014		58658	1 Urbis LED	Teceo 32 LED 500mA	52 Watts	6.00 Metres	Galvanised Steel	
Y	7	STREET LIGHTING	SUTCLIFFE AVENUE COMMUNITY	GRIMSBY	525529.79	407404.04	2014		62994	1 Urbis LED	Teceo 32 LED 500mA	52 Watts	6.00 Metres	Galvanised Steel	
Y	8	STREET LIGHTING	SUTCLIFFE AVENUE COMMUNITY	GRIMSBY	525551.32	407391.43			67365	Urbis	Teceo 32 LED 500mA	52 Watts	6.00 Metres	Steel	
Y	1	STREET LIGHTING	SUTCLIFFE AVENUE SHOP REAR CAR	GRIMSBY	525551.38	407413.66	1997		58659	Urbis	Axia 16 LED 350mA	19 Watts	6.00 Metres	Galvanised Steel	
Y	2	STREET LIGHTING	SUTCLIFFE AVENUE SHOP REAR CAR	GRIMSBY	525568.59	407437.14	1997		58660	Urbis	Axia 16 LED 350mA	19 Watts	5.00 Metres	Galvanised Steel	
Y	3	STREET LIGHTING	SUTCLIFFE AVENUE SHOP REAR CAR	GRIMSBY	525542.52	407431.38	1997		58661	Urbis	Axia 16 LED 350mA	19 Watts	5.00 Metres	Galvanised Steel	
Y	1	STREET LIGHTING	SUTCLIFFE AVENUE SHOPS	GRIMSBY	525566.04	407459.12	1997		66302	Urbis	Axia 16 LED 350mA	19 Watts	4.00 Metres	Steel	
Y	2	STREET LIGHTING	SUTCLIFFE AVENUE SHOPS	GRIMSBY	525549.45	407461.74	1997		62449	Urbis	Axia 16 LED 350mA	19 Watts	4.00 Metres	Steel	
Y	3	STREET LIGHTING	SUTCLIFFE AVENUE SHOPS	GRIMSBY	525530.65	407457.56	1997		66303	Urbis	Axia 16 LED 350mA	19 Watts	4.00 Metres	Steel	
Y	4	STREET LIGHTING	SUTCLIFFE AVENUE SHOPS	GRIMSBY	525515.76	407448.2	1997		66304	Urbis	Axia 16 LED 350mA	19 Watts	4.00 Metres	Steel	
Y	5	STREET LIGHTING	SUTCLIFFE AVENUE SHOPS	GRIMSBY	525517.24	407425.13	1997		66305	Urbis	Axia 16 LED 350mA	19 Watts	4.00 Metres	Steel	
Y	9	STREET LIGHTING	SUTCLIFFE AVENUE SHOPS	GRIMSBY	525497.28	407443.37	1997		66306	Urbis	Axia 16 LED 350mA	19 Watts	4.00 Metres	Steel	
Y	10	STREET LIGHTING	SUTCLIFFE AVENUE SHOPS	GRIMSBY	525488.48	407424.9	1997		66307	Urbis	Axia 16 LED 350mA	19 Watts	4.00 Metres	Steel	
Y	11	STREET LIGHTING	SUTCLIFFE AVENUE SHOPS	GRIMSBY	525471.09	407437.68	1997		66308	Urbis	Axia 16 LED 350mA	19 Watts	4.00 Metres	Steel	
Y	12	STREET LIGHTING	SUTCLIFFE AVENUE SHOPS	GRIMSBY	525470.08	407420.3	1997		66309	Urbis	Axia 16 LED 350mA	19 Watts	4.00 Metres	Steel	
Y	13	STREET LIGHTING	SUTCLIFFE AVENUE SHOPS	GRIMSBY	525450.2	407440.02	1997		66310	Urbis	Axia 16 LED 350mA	19 Watts	4.00 Metres	Steel	
Y	14	STREET LIGHTING	SUTCLIFFE AVENUE SHOPS	GRIMSBY	525453.71	407420.45	1997		66311	Urbis	Axia 16 LED 350mA	19 Watts	4.00 Metres	Steel	
Y	15	STREET LIGHTING	SUTCLIFFE AVENUE SHOPS	GRIMSBY	525441.63	407414.61	1997		66312	Urbis	Axia 16 LED 350mA	19 Watts	4.00 Metres	Steel	
Y	16	STREET LIGHTING	SUTCLIFFE AVENUE SHOPS	GRIMSBY	525431.03	407428.87	1997		66313	Urbis	Axia 16 LED 350mA	19 Watts	4.00 Metres	Steel	
Y	17	STREET LIGHTING	SUTCLIFFE AVENUE SHOPS	GRIMSBY	525420.58	407410.47	1997		66314	Urbis	Axia 16 LED 350mA	19 Watts	4.00 Metres	Steel	
Y	18	STREET LIGHTING	SUTCLIFFE AVENUE SHOPS	GRIMSBY	525406.31	407423.73	1997		66315	Urbis	Axia 16 LED 350mA	19 Watts	4.00 Metres	Steel	
Y	19	STREET LIGHTING	SUTCLIFFE AVENUE SHOPS	GRIMSBY	525395.95	407405.41	1997		66316	Urbis	Axia 16 LED 350mA	19 Watts	4.00 Metres	Steel	
Y	20	STREET LIGHTING	SUTCLIFFE AVENUE SHOPS	GRIMSBY	525381.91	407419.13	1997		66317	Urbis	Axia 16 LED 350mA	19 Watts	4.00 Metres	Steel	
Y	1	STREET LIGHTING	SUTCLIFFE AVENUE FIELD PLAY AREA	GRIMSBY	525427.99	407465.07	1997		61911	1 Urbis LED	Teceo 48 LED 700mA	104 Watts	12.00 Metres	Steel	
Y	1	STREET LIGHTING	SUTCLIFFE AVENUE FIELD PLAY AREA	GRIMSBY	525427.99	407465.07	1997		62445	1 Urbis LED	Teceo 48 LED 700mA	104 Watts	12.00 Metres	Steel	
Y	1	STREET LIGHTING	SUTCLIFFE AVENUE FIELD PLAY AREA	GRIMSBY	525427.99	407465.07	1997		62996	1 Urbis LED	Teceo 48 LED 700mA	104 Watts	12.00 Metres	Steel	
Y	2	STREET LIGHTING	SUTCLIFFE AVENUE FIELD PLAY AREA	GRIMSBY	525440.09	407481.36	1997		61912	1 Urbis LED	Teceo 48 LED 700mA	104 Watts	12.00 Metres	Steel	
Y	2	STREET LIGHTING	SUTCLIFFE AVENUE FIELD PLAY AREA	GRIMSBY	525440.09	407481.36	1997		62446	1 Urbis LED	Teceo 48 LED 700mA	104 Watts	12.00 Metres	Steel	
Y	2	STREET LIGHTING	SUTCLIFFE AVENUE FIELD PLAY AREA	GRIMSBY	525440.09	407481.36	1997		62997	1 Urbis LED	Teceo 48 LED 700mA	104 Watts	12.00 Metres	Steel	
Y	3	STREET LIGHTING	SUTCLIFFE AVENUE FIELD PLAY AREA	GRIMSBY	525458.83	407471.99	1997		61913	1 Urbis LED	Teceo 48 LED 700mA	104 Watts	12.00 Metres	Steel	
Y	3	STREET LIGHTING	SUTCLIFFE AVENUE FIELD PLAY AREA	GRIMSBY	525458.83	407471.99	1997		62447	1 Urbis LED	Teceo 48 LED 700mA	104 Watts	12.00 Metres	Steel	
Y	3	STREET LIGHTING	SUTCLIFFE AVENUE FIELD PLAY AREA	GRIMSBY	525458.83	407471.99	1997		62998	1 Urbis LED	Teceo 48 LED 700mA	104 Watts	12.00 Metres	Steel	
Y	1	STREET LIGHTING	FOOTPATH FROM SUTCLIFFE AVENUE	GRIMSBY	525413.9	407484.33	1997		48825	Urbis	Axia 8 LED 350mA	10 Watts	5.00 Metres	Galvanised Steel	
Y	2	STREET LIGHTING	FOOTPATH FROM SUTCLIFFE AVENUE	GRIMSBY	525423.13	407497.12	1997		48826	Urbis	Axia 8 LED 350mA	10 Watts	5.00 Metres	Galvanised Steel	
Y	3	STREET LIGHTING	FOOTPATH FROM SUTCLIFFE AVENUE	GRIMSBY	525413.46	407512.81	1997		48827	Urbis	Axia 8 LED 350mA	10 Watts	5.00 Metres	Galvanised Steel	
Y	4	STREET LIGHTING	FOOTPATH FROM SUTCLIFFE AVENUE	GRIMSBY	525411.72	407543.29	1997		48828	Urbis	Axia 8 LED 350mA	10 Watts	5.00 Metres	Galvanised Steel	
Y	5	STREET LIGHTING	FOOTPATH FROM SUTCLIFFE AVENUE	GRIMSBY	525407.21	407567.2	1997		48829	Urbis	Axia 8 LED 350mA	10 Watts	5.00 Metres	Galvanised Steel	
Y	6	STREET LIGHTING	FOOTPATH FROM SUTCLIFFE AVENUE	GRIMSBY	525401.33	407594.95	1997		48830	Urbis	Axia 8 LED 350mA	10 Watts	5.00 Metres	Galvanised Steel	
Y	7	STREET LIGHTING	FOOTPATH FROM SUTCLIFFE AVENUE	GRIMSBY	525395.66	407621.98	1997		48831	Urbis	Axia 8 LED 350mA	10 Watts	5.00 Metres	Galvanised Steel	
Y	8	STREET LIGHTING	FOOTPATH FROM SUTCLIFFE AVENUE	GRIMSBY	525390.58	407647.05	1997		48832	Urbis	Axia 8 LED 350mA	10 Watts	5.00 Metres	Galvanised Steel	
Y	9	STREET LIGHTING	FOOTPATH FROM SUTCLIFFE AVENUE	GRIMSBY	525385.05	407674.45	1997		48833	Urbis	Axia 8 LED 350mA	10 Watts	5.00 Metres	Galvanised Steel	
Y	10	STREET LIGHTING	FOOTPATH FROM SUTCLIFFE AVENUE	GRIMSBY	525378.41	407698.21	1997		48834	Urbis	Axia 16 LED 350mA	19 Watts	5.00 Metres	Galvanised Steel	
Y	11	STREET LIGHTING	FOOTPATH FROM SUTCLIFFE AVENUE	GRIMSBY	525373.72	407723.33	1997		48835	Urbis	Axia 16 LED 350mA	19 Watts	5.00 Metres	Galvanised Steel	
Y	1	STREET LIGHTING	AYLESBY GARDENS	GRIMSBY	525724.44	407379.61	2023	01/02/2023	69195	Urbis	Axia 16 LED 350mA	19 Watts	6.00 Metres	Galvanised Steel	
Y	2	STREET LIGHTING	AYLESBY GARDENS	GRIMSBY	525746.16	407386.35	1999		43514	Urbis	Axia 16 LED 350mA	19 Watts	5.00 Metres	Steel	
Y	3	STREET LIGHTING	AYLESBY GARDENS	GRIMSBY	525773.5	407385.4	1999		43515	Urbis	Axia 16 LED 350mA	19 Watts	5.00 Metres	Steel	
Y	4	STREET LIGHTING	AYLESBY GARDENS	GRIMSBY	525775.78	407354.07	1999		43516	Urbis	Axia 16 LED 350mA	19 Watts	5.00 Metres	Steel	
Y	5	STREET LIGHTING	AYLESBY GARDENS	GRIMSBY	525787.81	407340.21	1999		43517	Urbis	Axia 16 LED 350mA	19 Watts	5.00 Metres	Steel	
Y	6	STREET LIGHTING	AYLESBY GARDENS	GRIMSBY	525747.7	407364.1	1999		43518	Urbis	Axia 16 LED 350mA	19 Watts	5.00 Metres	Steel	
Y	7	STREET LIGHTING	AYLESBY GARDENS	GRIMSBY	525754.6	407340.4	1999		43519	Urbis	Axia 16 LED 350mA	19 Watts	5.00 Metres	Steel	
Y	1	STREET LIGHTING	CHELWOOD DRIVE	GRIMSBY	525879.72	407330.2	1995		45780	1 Urbis LED	Axia 16 LED 500mA	28 Watts	5.00 Metres	Galvanised Steel	
Y	2	STREET LIGHTING	CHELWOOD DRIVE	GRIMSBY	525902.38	407347.04	1995		45781	1 Urbis LED	Axia 16 LED 500mA	28 Watts	5.00 Metres	Galvanised Steel	
Y	3	STREET LIGHTING	CHELWOOD DRIVE	GRIMSBY	525908.42	407364.73	2021	20/05/2021	68437	Urbis	Axia 24 LED 500mA	28 Watts	6.00 Metres	Galvanised Steel	
Y	1	STREET LIGHTING	HATCLIFFE CLOSE	GRIMSBY	525620.78	407268.55	1998		50294	1 Urbis LED	Axia 16 LED 500mA	28 Watts	5.00 Metres	Galvanised Steel	
Y	2	STREET LIGHTING	HATCLIFFE CLOSE	GRIMSBY	525649.77	407283.11	1998		50295	1 Urbis LED	Axia 16 LED 500mA	28 Watts	5.00 Metres	Galvanised Steel	
Y	3	STREET LIGHTING	HATCLIFFE CLOSE	GRIMSBY	525668.25	407277.73	2007		50296	1 Urbis LED	Axia 16 LED 500mA	28 Watts	5.00 Metres	Galvanised Steel	
Y	4	STREET LIGHTING	HATCLIFFE CLOSE	GRIMSBY	525664.33	407250.83	1998		50297	1 Urbis LED	Axia 16 LED 500mA	28 Watts	5.00 Metres	Galvanised Steel	
Y	5	STREET LIGHTING	HATCLIFFE CLOSE	GRIMSBY	525677.75	407227.73	1998		50298	1 Urbis LED	Axia 16 LED 500mA	28 Watts	5.00 Metres	Galvanised Steel	
Y	6	STREET LIGHTING	HATCLIFFE CLOSE	GRIMSBY	525701.29	407226.53	1998		50299	1 Urbis LED	Axia 16 LED 500mA	28 Watts	5.00 Metres	Galvanised Steel	
Y	1	STREET LIGHTING	BEECH AVENUE	GRIMSBY	526530	407198	2002		43898	1 Urbis LED	Axia 16 LED 500mA	28 Watts	6.00 Metres	Steel	
Y	2	STREET LIGHTING	BEECH AVENUE	GRIMSBY	526499	407198	2002		43899	1 Urbis LED	Axia 16 LED 500mA	28 Watts	6.00 Metres	Steel	
Y	3	STREET LIGHTING	BEECH AVENUE	GRIMSBY	526467	407199	2001		43900	1 Urbis LED	Axia 16 LED 500mA	28 Watts	6.00 Metres	Steel	
Y	1	STREET LIGHTING	BYRON GROVE	GRIMSBY	526007.09	407678.59	1990		45048	Urbis	Axia 16 LED 350mA	19 Watts	5.00 Metres	Galvanised Steel	
Y	2	STREET LIGHTING	BYRON GROVE	GRIMSBY	526038.46	407683.86	1990		45049	Urbis	Axia 16 LED 350mA	19 Watts	5.00 Metres	Galvanised Steel	
Y	3	STREET LIGHTING	BYRON GROVE	GRIMSBY	526063.52	407698.04	1990		45050	Urbis	Axia 16 LED 350mA	19 Watts	5.00 Metres	Galvanised Steel	
Y	4	STREET LIGHTING	BYRON GROVE	GRIMSBY	526081.95	407733.31	1990		45051	Urbis	Axia 16 LED 350mA	19 Watts	5.00 Metres	Galvanised Steel	
Y	5	STREET LIGHTING	BYRON GROVE	GRIMSBY	526083.56	407704.75	1990		45052	Urbis	Axia 16 LED 350mA	19 Watts	5.00 Metres	Galvanised Steel	
Y	6	STREET LIGHTING	BYRON GROVE	GRIMSBY	526086.39	407692.81	1990		45053	Urbis	Axia 16 LED 350mA	19 Watts	5.00 Metres	Galvanised Steel	
Y	7	STREET LIGHTING	BYRON GROVE	GRIMSBY	526098.56	407665.11	1990		45054	Urbis	Axia 16 LED 350mA	19 Watts	5.00 Metres	Galvanised Steel	
Y	8	STREET LIGHTING	BYRON GROVE	GRIMSBY	526065.42	407690	1990		45055	Urbis	Axia 16 LED 350mA	19 Watts	5.00 Metres	Galvanised Steel	
Y	1	STREET LIGHTING	CONNAUGHT AVENUE	GRIMSBY	526819.13	408048.21	1988		46565	Urbis	Axia 16 LED 350mA	19 Watts	6.00 Metres	Galvanised Steel	
Y	2	STREET LIGHTING	CONNAUGHT AVENUE	GRIMSBY	526810.52	408018.4	1988		46566	Urbis	Axia 16 LED 350mA	19 Watts	6.00 Metres	Galvanised Steel	
Y	3	STREET LIGHTING	CONNAUGHT AVENUE	GRIMSBY	526826.21	407987.32	1988		46567	Urbis	Axia 16 LED 350mA	19 Watts	6.00 Metres	Galvanised Steel	
Y	4	STREET LIGHTING	CONNAUGHT AVENUE	GRIMSBY	526829.51	407954.67	1988		46568	Urbis	Axia 16 LED 350mA	19 Watts	6.00 Metres	Galvanised Steel	
Y	5	STREET LIGHTING	CONNAUGHT AVENUE	GRIMSBY	526820.9	407923.91	1988		46569	Urbis	Axia 16 LED 350mA	19 Watts	6.00 Metres	Galvanised Steel	
Y	6	STREET LIGHTING	CONNAUGHT AVENUE	GRIMSBY	526824.57	407894.36	1988		46570	Urbis	Axia 16 LED 350mA	19 Watts	6.00 Metres	Galvanised Steel	
Y	7	STREET LIGHTING	CONNAUGHT AVENUE	GRIMSBY	526839.63	407865.43	1988		46571	Urbis	Axia 16 LED 350mA	19 Watts	6.00 Metres	Galvanised Steel	
Y	8	STREET LIGHTING	CONNAUGHT AVENUE	GRIMSBY	526830.9	407836.45	1988		46572	Urbis	Axia 16 LED 350mA	19 Watts	6.00 Metres	Galvanised Steel	
Y	9	STREET LIGHTING	CONNAUGHT AVENUE	GRIMSBY	526846.09	407806.39	1988		46573	Urbis	Axia 16 LED 350mA	19 Watts	6.00 Metres	Galvanised Steel	
Y	10	STREET LIGHTING	CONNAUGHT AVENUE	GRIMSBY	526837.48	407775.76	1988		46574	Urbis	Axia 16 LED 350mA	19 Watts	6.00 Metres	Galvanised Steel	
Y	1	STREET LIGHTING	DEVONSHIRE AVENUE	GRIMSBY	526639.45	408002.82	2019	02/05/2019	67364	Urbis	Axia 16 LED 500mA	28 Watts	6.00 Metres	Galvanised Steel	
Y	2	STREET LIGHTING	DEVONSHIRE AVENUE	GRIMSBY	526642	407975.04	1988		47460	1 Urbis LED	Axia 16 LED 500mA	28 Watts	6.00 Metres	Galvanised Steel	
Y	3	STREET LIGHTING	DEVONSHIRE AVENUE	GRIMSBY	526645.29	407943.77	1988		47461	1 Urbis LED	Axia 16 LED 500mA	28 Watts	6.00 Metres	Galvanised Steel	
Y	4	STREET LIGHTING	DEVONSHIRE AVENUE	GRIMSBY	526636.68	407914.41	1988		47462	1 Urbis LED	Axia 16 LED 500mA	28 Watts	6.00 Metres	Galvanised Steel	
Y	5	STREET LIGHTING	DEVONSHIRE AVENUE	GRIMSBY	526639.97	407884.41	1988		47463	1 Urbis LED	Axia 16 LED 500mA	28 Watts	6.00 Metres	Galvanised Steel	
Y	6	STREET LIGHTING	DEVONSHIRE AVENUE	GRIMSBY	526643.27	407855.17	1988		47464	1 Urbis LED	Axia 16 LED 500mA	28 Watts	6.00 Metres	Galvanised Steel	
Y	7	STREET LIGHTING	DEVONSHIRE AVENUE	GRIMSBY	526646.3	407826.37	1988		47465	1 Urbis LED	Axia 16 LED 500mA	28 Watts	6.00 Metres	Galvanised Steel	
Y	8	STREET LIGHTING	DEVONSHIRE AVENUE	GRIMSBY	526661.62	407798.77	1988		47466	1 Urbis LED	Axia 16 LED 500mA	28 Watts	6.00 Metres	Galvanised Steel	
Y	9	STREET LIGHTING	DEVONSHIRE AVENUE	GRIMSBY	526652.76	407768.52	1988		47467	1 Urbis LED	Axia 16 LED 500mA	28 Watts	6.00 Metres	Galvanised Steel	
Y	10	STREET LIGHTING	DEVONSHIRE AVENUE	GRIMSBY	526653.9	407743.96	1988		47468	1 Urbis LED	Axia 16 LED 500mA	28 Watts	6.00 Metres	Galvanised Steel	
Y	1	STREET LIGHTING	EASTWOOD AVENUE	GRIMSBY	526561.03	407916.45	1988		47774	Urbis	Axia 16 LED 350mA	19 Watts	6.00 Metres	Galvanised Steel	
Y	2	STREET LIGHTING	EASTWOOD AVENUE	GRIMSBY	526556.1	407885.13	1988		47775	Urbis	Axia 16 LED 350mA	19 Watts	6.00 Metres	Galvanised Steel	
Y	3	STREET LIGHTING	EASTWOOD AVENUE	GRIMSBY	526567.24	407857.28	2003		47776	Urbis	Axia 16 LED 350mA	19 Watts	6.00 Metres	Stainless Steel	
Y	4	STREET LIGHTING	EASTWOOD AVENUE	GRIMSBY	526572.81	407822.22	1988		47777	Urbis	Axia 16 LED 350mA	19 Watts	6.00 Metres	Galvanised Steel	
Y	5	STREET LIGHTING	EASTWOOD AVENUE	GRIMSBY	526564.45	407793.42	1988		47778	Urbis	Axia 16 LED 350mA	19 Watts	6.00 Metres	Galvanised Steel	
Y	6	STREET LIGHTING	EASTWOOD AVENUE	GRIMSBY	526567.49	407765.77	1988		47779	Urbis	Axia 16 LED 350mA	19 Watts	6.00 Metres	Galvanised Steel	
Y	7	STREET LIGHTING	EASTWOOD AVENUE	GRIMSBY	526572.81	407735.9	1988		47780	Urbis	Axia 16 LED 350mA	19 Watts	6.00 Metres	Galvanised Steel	
Y	8	STREET LIGHTING	EASTWOOD AVENUE	GRIMSBY	526578.89	407709	1988		47781	Urbis	Axia 16 LED 350mA	19 Watts	6.00 Metres	Galvanised Steel	
Y	9	STREET LIGHTING	EASTWOOD AVENUE	GRIMSBY	526584.96	407688.05	1988		47782	Urbis	Axia 16 LED 350mA	19 Watts	6.00 Metres	Galvanised Steel	
Y	10	STREET LIGHTING	EASTWOOD AVENUE	GRIMSBY	526552.96	407888.14	2014		66420	1 Urbis LED	Other	47 Watts	5.00 Metres	Galvanised Steel	
Y	11	STREET LIGHTING	EASTWOOD AVENUE	GRIMSBY	526530.11	407886.35	2014		66421	1 Urbis LED	Other	47 Watts	5.00 Metres	Galvanised Steel	
Y	1	STREET LIGHTING	FIRST AVENUE	GRIMSBY	526184.34	407869.49	1993		48598	1 Urbis LED	Teceo 32 LED 500mA	52 Watts	8.00 Metres	Galvanised Steel	
Y	2	STREET LIGHTING	FIRST AVENUE	GRIMSBY	526188.9	407831.32	1993		48599	1 Urbis LED	Teceo 32 LED 500mA	52 Watts	8.00 Metres	Galvanised Steel	
Y	3	STREET LIGHTING	FIRST AVENUE	GRIMSBY	526190.8	407797.28	1993		48600	1 Urbis LED	Teceo 32 LED 500mA	52 Watts	8.00 Metres	Galvanised Steel	

Y	4	STREET LIGHTING	FIRST AVENUE	GRIMSBY	526184.85	407757.22	1993		48601	1 Urbis LED	Teceo 32 LED 500mA	52 Watts	8.00 Metres	Galvanised Steel	
Y	5	STREET LIGHTING	FIRST AVENUE	GRIMSBY	526198.77	407736.39	1993		48602	1 Urbis LED	Teceo 32 LED 500mA	52 Watts	6.00 Metres	Galvanised Steel	
Y	6	STREET LIGHTING	FIRST AVENUE	GRIMSBY	526189.41	407712.66	1993		48603	1 Urbis LED	Teceo 16 LED 500mA	28 Watts	6.00 Metres	Galvanised Steel	
Y	7	STREET LIGHTING	FIRST AVENUE	GRIMSBY	526203.58	407687.03	1993		48604	1 Urbis LED	Teceo 16 LED 500mA	28 Watts	6.00 Metres	Galvanised Steel	
Y	8	STREET LIGHTING	FIRST AVENUE	GRIMSBY	526194.34	407663.68	1993		48605	1 Urbis LED	Teceo 16 LED 500mA	28 Watts	6.00 Metres	Galvanised Steel	
Y	9	STREET LIGHTING	FIRST AVENUE	GRIMSBY	526208.14	407641.72	1993		48606	1 Urbis LED	Teceo 16 LED 500mA	28 Watts	6.00 Metres	Galvanised Steel	
Y	10	STREET LIGHTING	FIRST AVENUE	GRIMSBY	526199.03	407617.67	1993		48607	1 Urbis LED	Teceo 16 LED 500mA	28 Watts	6.00 Metres	Galvanised Steel	
Y	11	STREET LIGHTING	FIRST AVENUE	GRIMSBY	526201.31	407593.01	1993		48608	1 Urbis LED	Teceo 16 LED 500mA	28 Watts	6.00 Metres	Galvanised Steel	
Y	12	STREET LIGHTING	FIRST AVENUE	GRIMSBY	526206.75	407548.94	1993		48609	1 Urbis LED	Teceo 16 LED 500mA	28 Watts	6.00 Metres	Galvanised Steel	
Y	13	STREET LIGHTING	FIRST AVENUE	GRIMSBY	526209.03	407526.59	1993		48610	1 Urbis LED	Teceo 16 LED 500mA	28 Watts	6.00 Metres	Galvanised Steel	
Y	14	STREET LIGHTING	FIRST AVENUE	GRIMSBY	526211.56	407502.74	1993		48611	1 Urbis LED	Teceo 16 LED 500mA	28 Watts	6.00 Metres	Galvanised Steel	
Y	15	STREET LIGHTING	FIRST AVENUE	GRIMSBY	526223.33	407481.79	1993		48612	1 Urbis LED	Teceo 16 LED 500mA	28 Watts	6.00 Metres	Galvanised Steel	
Y	1	STREET LIGHTING	FRUSHER AVENUE	GRIMSBY	526526.5	407402.3	2009		49045	Urbis	Axia 16 LED 350mA	19 Watts	6.00 Metres	Steel	
Y	2	STREET LIGHTING	FRUSHER AVENUE	GRIMSBY	526497.8	407406.9	2009		49046	Urbis	Axia 16 LED 350mA	19 Watts	6.00 Metres	Steel	
Y	3	STREET LIGHTING	FRUSHER AVENUE	GRIMSBY	526462.8	407403.3	2009		49047	Urbis	Axia 16 LED 350mA	19 Watts	6.00 Metres	Steel	
Y	4	STREET LIGHTING	FRUSHER AVENUE	GRIMSBY	526430.4	407392.2	2009		49048	Urbis	Axia 16 LED 350mA	19 Watts	6.00 Metres	Steel	
Y	1	STREET LIGHTING	HOMEFIELD AVENUE	GRIMSBY	526561.62	407418.17	1992		50984	Urbis	Axia 16 LED 350mA	19 Watts	5.00 Metres	Galvanised Steel	
Y	2	STREET LIGHTING	HOMEFIELD AVENUE	GRIMSBY	526586.29	407418.53	1992		50985	Urbis	Axia 16 LED 350mA	19 Watts	5.00 Metres	Galvanised Steel	
Y	3	STREET LIGHTING	HOMEFIELD AVENUE	GRIMSBY	526613.54	407410.71	1992		50986	Urbis	Axia 16 LED 350mA	19 Watts	5.00 Metres	Galvanised Steel	
Y	4	STREET LIGHTING	HOMEFIELD AVENUE	GRIMSBY	526638.77	407412.18	1992		50987	Urbis	Axia 16 LED 350mA	19 Watts	5.00 Metres	Galvanised Steel	
Y	5	STREET LIGHTING	HOMEFIELD AVENUE	GRIMSBY	526664.17	407419.82	1992		50988	Urbis	Axia 16 LED 350mA	19 Watts	5.00 Metres	Galvanised Steel	
Y	1	STREET LIGHTING	KINGSLEY GROVE	GRIMSBY	526046.43	407520.32	1993		51848	Urbis	Axia 16 LED 350mA	19 Watts	6.00 Metres	Galvanised Steel	
Y	2	STREET LIGHTING	KINGSLEY GROVE	GRIMSBY	526068.71	407523.61	1993		51849	Urbis	Axia 16 LED 350mA	19 Watts	6.00 Metres	Galvanised Steel	
Y	3	STREET LIGHTING	KINGSLEY GROVE	GRIMSBY	526097.57	407527.22	1993		51850	Urbis	Axia 16 LED 350mA	19 Watts	6.00 Metres	Galvanised Steel	
Y	4	STREET LIGHTING	KINGSLEY GROVE	GRIMSBY	526126.18	407524.5	1993		51851	Urbis	Axia 16 LED 350mA	19 Watts	6.00 Metres	Galvanised Steel	
Y	5	STREET LIGHTING	KINGSLEY GROVE	GRIMSBY	526154.15	407521.65	1993		51852	Urbis	Axia 16 LED 350mA	19 Watts	6.00 Metres	Galvanised Steel	
Y	6	STREET LIGHTING	KINGSLEY GROVE	GRIMSBY	526179.47	407512.73	1993		51853	Urbis	Axia 16 LED 350mA	19 Watts	6.00 Metres	Galvanised Steel	
Y	1	STREET LIGHTING	LANSDOWNE AVENUE	GRIMSBY	527114.59	407790.92	2024	07/08/2024	69938	Urbis	Axia 24 LED 1000mA	80 Watts	8.00 Metres	Galvanised Steel	
Y	2	STREET LIGHTING	LANSDOWNE AVENUE	GRIMSBY	527086.66	407787.69	1988		52297	Urbis	Axia 16 LED 350mA	19 Watts	6.00 Metres	Galvanised Steel	
Y	3	STREET LIGHTING	LANSDOWNE AVENUE	GRIMSBY	527060.59	407784.88	2024	07/08/2024	70055	Urbis	Axia 24 LED 1000mA	80 Watts	8.00 Metres	Galvanised Steel	
Y	4	STREET LIGHTING	LANSDOWNE AVENUE	GRIMSBY	527029.07	407769.9	1988		52299	Urbis	Axia 16 LED 350mA	19 Watts	6.00 Metres	Galvanised Steel	
Y	5	STREET LIGHTING	LANSDOWNE AVENUE	GRIMSBY	527001.73	407778.32	1988		52300	Urbis	Axia 16 LED 350mA	19 Watts	6.00 Metres	Galvanised Steel	
Y	6	STREET LIGHTING	LANSDOWNE AVENUE	GRIMSBY	526984.77	407765.22	1988		52301	Urbis	Axia 16 LED 350mA	19 Watts	6.00 Metres	Galvanised Steel	
Y	7	STREET LIGHTING	LANSDOWNE AVENUE	GRIMSBY	526965.4	407774.78	1988		52302	Urbis	Axia 16 LED 350mA	19 Watts	6.00 Metres	Galvanised Steel	
Y	8	STREET LIGHTING	LANSDOWNE AVENUE	GRIMSBY	526946.41	407761.11	1988		52303	Urbis	Axia 16 LED 350mA	19 Watts	6.00 Metres	Galvanised Steel	
Y	9	STREET LIGHTING	LANSDOWNE AVENUE	GRIMSBY	526916.41	407769.97	1988		52304	Urbis	Axia 16 LED 350mA	19 Watts	6.00 Metres	Galvanised Steel	
Y	10	STREET LIGHTING	LANSDOWNE AVENUE	GRIMSBY	526889.33	407754.91	1988		52305	Urbis	Axia 16 LED 350mA	19 Watts	6.00 Metres	Galvanised Steel	
Y	11	STREET LIGHTING	LANSDOWNE AVENUE	GRIMSBY	526856.42	407763.45	1988		52306	Urbis	Axia 16 LED 350mA	19 Watts	6.00 Metres	Galvanised Steel	
Y	12	STREET LIGHTING	LANSDOWNE AVENUE	GRIMSBY	526846.8	407750.67	1988		52307	Urbis	Axia 16 LED 350mA	19 Watts	6.00 Metres	Galvanised Steel	
Y	13	STREET LIGHTING	LANSDOWNE AVENUE	GRIMSBY	526826.42	407760.04	1988		52308	Urbis	Axia 16 LED 350mA	19 Watts	6.00 Metres	Galvanised Steel	
Y	14	STREET LIGHTING	LANSDOWNE AVENUE	GRIMSBY	526796.67	407745.29	1988		52309	Urbis	Axia 16 LED 350mA	19 Watts	6.00 Metres	Galvanised Steel	
Y	15	STREET LIGHTING	LANSDOWNE AVENUE	GRIMSBY	526767.05	407754.15	1988		52310	Urbis	Axia 16 LED 350mA	19 Watts	6.00 Metres	Galvanised Steel	
Y	16	STREET LIGHTING	LANSDOWNE AVENUE	GRIMSBY	526749.59	407740.16	1988		52311	Urbis	Axia 16 LED 350mA	19 Watts	6.00 Metres	Galvanised Steel	
Y	17	STREET LIGHTING	LANSDOWNE AVENUE	GRIMSBY	526729.84	407749.72	1988		52312	Urbis	Axia 16 LED 350mA	19 Watts	6.00 Metres	Galvanised Steel	
Y	18	STREET LIGHTING	LANSDOWNE AVENUE	GRIMSBY	526703.39	407735.04	1988		52313	Urbis	Axia 16 LED 350mA	19 Watts	6.00 Metres	Galvanised Steel	
Y	19	STREET LIGHTING	LANSDOWNE AVENUE	GRIMSBY	526673.26	407743.65	1988		52314	Urbis	Axia 16 LED 350mA	19 Watts	6.00 Metres	Galvanised Steel	
Y	20	STREET LIGHTING	LANSDOWNE AVENUE	GRIMSBY	526656.55	407729.79	1988		52315	Urbis	Axia 16 LED 350mA	19 Watts	6.00 Metres	Galvanised Steel	
Y	1	STREET LIGHTING	LIME TREE AVENUE	GRIMSBY	526533.73	407262.9	1992		52552	Urbis	Axia 16 LED 350mA	19 Watts	5.00 Metres	Galvanised Steel	
Y	2	STREET LIGHTING	LIME TREE AVENUE	GRIMSBY	526512.37	407262.35	1992		52553	Urbis	Axia 16 LED 350mA	19 Watts	5.00 Metres	Galvanised Steel	
Y	3	STREET LIGHTING	LIME TREE AVENUE	GRIMSBY	526487.7	407268.33	1992		52554	Urbis	Axia 16 LED 350mA	19 Watts	5.00 Metres	Galvanised Steel	
Y	4	STREET LIGHTING	LIME TREE AVENUE	GRIMSBY	526463.21	407260.51	1992		52555	Urbis	Axia 16 LED 350mA	19 Watts	5.00 Metres	Galvanised Steel	
Y	1	STREET LIGHTING	MILTON ROAD	GRIMSBY	526405.63	407510.07	1993		53694	1 Urbis LED	Axia 16 LED 500mA	28 Watts	6.00 Metres	Galvanised Steel	
Y	2	STREET LIGHTING	MILTON ROAD	GRIMSBY	526402.21	407534.44	1993		53695	1 Urbis LED	Axia 16 LED 500mA	28 Watts	6.00 Metres	Galvanised Steel	
Y	3	STREET LIGHTING	MILTON ROAD	GRIMSBY	526405.88	407563.17	1993		53696	1 Urbis LED	Axia 16 LED 500mA	28 Watts	6.00 Metres	Galvanised Steel	
Y	4	STREET LIGHTING	MILTON ROAD	GRIMSBY	526389.93	407581.91	1993		53697	1 Urbis LED	Axia 16 LED 500mA	28 Watts	6.00 Metres	Galvanised Steel	
Y	5	STREET LIGHTING	MILTON ROAD	GRIMSBY	526383.6	407606.08	1993		53698	1 Urbis LED	Axia 16 LED 500mA	28 Watts	6.00 Metres	Galvanised Steel	
Y	6	STREET LIGHTING	MILTON ROAD	GRIMSBY	526386.9	407634.94	1993		53699	Urbis	Axia 8 LED 350mA	10 Watts	6.00 Metres	Galvanised Steel	
Y	7	STREET LIGHTING	MILTON ROAD	GRIMSBY	526370.69	407655.64	1993		53700	1 Urbis LED	Axia 16 LED 500mA	28 Watts	6.00 Metres	Galvanised Steel	
Y	8	STREET LIGHTING	MILTON ROAD	GRIMSBY	526373.23	407683.04	1993		53701	1 Urbis LED	Axia 16 LED 500mA	28 Watts	6.00 Metres	Galvanised Steel	
Y	9	STREET LIGHTING	MILTON ROAD	GRIMSBY	526352.72	407698.42	1993		53702	1 Urbis LED	Axia 16 LED 500mA	28 Watts	6.00 Metres	Galvanised Steel	
Y	10	STREET LIGHTING	MILTON ROAD	GRIMSBY	526344.24	407725.26	1993		53703	1 Urbis LED	Axia 16 LED 500mA	28 Watts	6.00 Metres	Galvanised Steel	
Y	11	STREET LIGHTING	MILTON ROAD	GRIMSBY	526322.49	407743.4	1993		53704	1 Urbis LED	Axia 16 LED 500mA	28 Watts	6.00 Metres	Galvanised Steel	
Y	12	STREET LIGHTING	MILTON ROAD	GRIMSBY	526294.52	407746.75	1993		53705	1 Urbis LED	Axia 16 LED 500mA	28 Watts	6.00 Metres	Galvanised Steel	
Y	13	STREET LIGHTING	MILTON ROAD	GRIMSBY	526273.38	407753.91	1993		53706	1 Urbis LED	Axia 16 LED 500mA	28 Watts	6.00 Metres	Galvanised Steel	
Y	14	STREET LIGHTING	MILTON ROAD	GRIMSBY	526251.87	407769.92	1993		53707	1 Urbis LED	Axia 16 LED 500mA	28 Watts	6.00 Metres	Galvanised Steel	
Y	15	STREET LIGHTING	MILTON ROAD	GRIMSBY	526230.09	407764.41	2017		53708	Urbis	Axia 16 LED 350mA	19 Watts	6.00 Metres	Galvanised Steel	
Y	16	STREET LIGHTING	MILTON ROAD	GRIMSBY	526207.06	407780.68	1993		53709	1 Urbis LED	Axia 16 LED 500mA	28 Watts	6.00 Metres	Galvanised Steel	
Y	17	STREET LIGHTING	MILTON ROAD	GRIMSBY	526168.07	407779.73	1993		53710	1 Urbis LED	Axia 16 LED 500mA	28 Watts	6.00 Metres	Galvanised Steel	
Y	18	STREET LIGHTING	MILTON ROAD	GRIMSBY	526148.83	407781.82	1993		53711	1 Urbis LED	Axia 16 LED 500mA	28 Watts	6.00 Metres	Galvanised Steel	
Y	19	STREET LIGHTING	MILTON ROAD	GRIMSBY	526121.87	407794.79	2003		53712	1 Urbis LED	Axia 16 LED 500mA	28 Watts	6.00 Metres	Stainless Steel	
Y	20	STREET LIGHTING	MILTON ROAD	GRIMSBY	526093.39	407797.52	1993		53713	1 Urbis LED	Axia 16 LED 500mA	28 Watts	6.00 Metres	Galvanised Steel	
Y	21	STREET LIGHTING	MILTON ROAD	GRIMSBY	526069.85	407800.05	1993		53714	1 Urbis LED	Axia 16 LED 500mA	28 Watts	6.00 Metres	Galvanised Steel	
Y	22	STREET LIGHTING	MILTON ROAD	GRIMSBY	526043.01	407792.14	1993		53715	1 Urbis LED	Axia 16 LED 500mA	28 Watts	6.00 Metres	Galvanised Steel	
Y	23	STREET LIGHTING	MILTON ROAD	GRIMSBY	526019.09	407804.48	1993		53716	1 Urbis LED	Axia 16 LED 500mA	28 Watts	6.00 Metres	Galvanised Steel	
Y	24	STREET LIGHTING	MILTON ROAD	GRIMSBY	525994.15	407786.06	1993		53717	1 Urbis LED	Axia 16 LED 500mA	28 Watts	6.00 Metres	Galvanised Steel	
Y	25	STREET LIGHTING	MILTON ROAD	GRIMSBY	525944.85	407777.81	1993		53718	1 Urbis LED	Axia 16 LED 500mA	28 Watts	6.00 Metres	Galvanised Steel	
Y	26	STREET LIGHTING	MILTON ROAD	GRIMSBY	525926.37	407759.96	1993		53719	1 Urbis LED	Axia 16 LED 500mA	28 Watts	6.00 Metres	Galvanised Steel	
Y	27	STREET LIGHTING	MILTON ROAD	GRIMSBY	525902.96	407764.96	1993		53720	1 Urbis LED	Axia 16 LED 500mA	28 Watts	6.00 Metres	Galvanised Steel	
Y	28	STREET LIGHTING	MILTON ROAD	GRIMSBY	525877.39	407747.43	1993		53721	1 Urbis LED	Axia 16 LED 500mA	28 Watts	6.00 Metres	Galvanised Steel	
Y	29	STREET LIGHTING	MILTON ROAD	GRIMSBY	525848.02	407752.05	1993		53722	1 Urbis LED	Axia 16 LED 500mA	28 Watts	6.00 Metres	Galvanised Steel	
Y	30	STREET LIGHTING	MILTON ROAD	GRIMSBY	525821.94	407745.79	1993		53723	1 Urbis LED	Axia 16 LED 500mA	28 Watts	6.00 Metres	Galvanised Steel	
Y	31	STREET LIGHTING	MILTON ROAD	GRIMSBY	525798.53	407740.34	1993		53724	1 Urbis LED	Axia 16 LED 500mA	28 Watts	6.00 Metres	Galvanised Steel	
Y	32	STREET LIGHTING	MILTON ROAD	GRIMSBY	525778.27	407724.33	1993		53725	1 Urbis LED	Axia 16 LED 500mA	28 Watts	6.00 Metres	Galvanised Steel	
Y	33	STREET LIGHTING	MILTON ROAD	GRIMSBY	525752.33	407729.33	1993		53726	1 Urbis LED	Axia 16 LED 500mA	28 Watts	6.00 Metres	Galvanised Steel	
Y	34	STREET LIGHTING	MILTON ROAD	GRIMSBY	525722.58	407722.3	1993		53727	1 Urbis LED	Axia 16 LED 500mA	28 Watts	6.00 Metres	Galvanised Steel	
Y	35	STREET LIGHTING	MILTON ROAD	GRIMSBY	525699.29	407716.61	1993		53728	1 Urbis LED	Axia 16 LED 500mA	28 Watts	6.00 Metres	Galvanised Steel	
Y	36	STREET LIGHTING	MILTON ROAD	GRIMSBY	525678.53	407700.98	1993		53729	1 Urbis LED	Axia 16 LED 500mA	28 Watts	6.00 Metres	Galvanised Steel	
Y	37	STREET LIGHTING	MILTON ROAD	GRIMSBY	525651.57	407706.1	1993		53730	1 Urbis LED	Axia 16 LED 500mA	28 Watts	6.00 Metres	Galvanised Steel	
Y	38	STREET LIGHTING	MILTON ROAD	GRIMSBY	525629.54	407701.42	1993		53731	1 Urbis LED	Axia 16 LED 500mA	28 Watts	6.00 Metres	Galvanised Steel	
Y	39	STREET LIGHTING	MILTON ROAD	GRIMSBY	525606.63	407685.15	1993		53732	1 Urbis LED	Axia 16 LED 500mA	28 Watts	6.00 Metres	Galvanised Steel	
Y	40	STREET LIGHTING	MILTON ROAD	GRIMSBY	525576.25	407690.15	1993		53733	1 Urbis LED	Axia 16 LED 500mA	28 Watts	6.00 Metres	Galvanised Steel	
Y	41	STREET LIGHTING	MILTON ROAD	GRIMSBY	525548.78	407673	1993		53734	1 Urbis LED	Axia 16 LED 500mA	28 Watts	6.00 Metres	Galvanised Steel	
Y	42	STREET LIGHTING	MILTON ROAD	GRIMSBY	525520.18	407678.44	1993		53735	1 Urbis LED	Axia 16 LED 500mA	28 Watts	6.00 Metres	Galvanised Steel	
Y	43	STREET LIGHTING	MILTON ROAD	GRIMSBY	525510.05	407659.14	1993		53736	1 Urbis LED	Axia 16 LED 500mA	28 Watts	5.00 Metres	Galvanised Steel	
Y	44	STREET LIGHTING	MILTON ROAD	GRIMSBY	525495	407664	2000		53737	1 Urbis LED	Axia 16 LED 500mA	28 Watts	6.00 Metres	Galvanised Steel	
Y	45	STREET LIGHTING	MILTON ROAD	GRIMSBY	525510	407636	2000		53738	1 Urbis LED	Axia 16 LED 500mA	28 Watts	6.00 Metres	Galvanised Steel	
Y	1	STREET LIGHTING	NEW CLOSE	GRIMSBY	526186.5	407668.65	1995		54023	Urbis	Axia 16 LED 350mA	19 Watts	5.00 Metres	Galvanised Steel	
Y	2	STREET LIGHTING	NEW CLOSE	GRIMSBY	526160.3	407655.93	1995		54036	Urbis	Axia 8 LED 350mA	10 Watts	6.00 Metres	Galvanised Steel	
Y	3	STREET LIGHTING	NEW CLOSE	GRIMSBY	526152.58	407625.36	1995		54027	Urbis	Axia 8 LED 350mA	10 Watts	6.00 Metres	Galvanised Steel	
Y	4	STREET LIGHTING	NEW CLOSE	GRIMSBY	526120.05	407630.93	1995		54026	WRTL		50 Watts	6.00 Metres	Galvanised Steel	
Y	5	STREET LIGHTING	NEW CLOSE	GRIMSBY	526138.66	407643.65	1995		54025	Urbis	Axia 16 LED 350mA	19 Watts	6.00 Metres	Galvanised Steel	
Y	6	STREET LIGHTING	NEW CLOSE	GRIMSBY	526121.69	407660.74	1995		54037	WRTL		50 Watts	6.00 Metres	Galvanised Steel	
Y	7	STREET LIGHTING	NEW CLOSE	GRIMSBY	526134.86	407667.13	1995		54028	Urbis	Axia 16 LED 350mA	19 Watts	5.00 Metres	Galvanised Steel	
Y	8	STREET LIGHTING	NEW CLOSE	GRIMSBY	526138.28	407690.62	2015		54029	Urbis	Axia 16 LED 350mA	19 Watts	6.00 Metres	Galvanised Steel	
Y	9	STREET LIGHTING	NEW CLOSE	GRIMSBY	526126.25	407722.89	1995		54030	Urbis	Axia 8 LED 350mA	10 Watts	6.00 Metres	Galvanised Steel	
Y	10	STREET LIGHTING	NEW CLOSE	GRIMSBY	526123.34	407743.08	1995		54031	Urbis	Axia 8 LED 350mA	10 Watts	6.00 Metres	Galvanised Steel	
Y	11	STREET LIGHTING	NEW CLOSE	GRIMSBY	526147.01	407744.73	1995		54033	Urbis	Axia 8 LED 350mA	10 Watts	6.00 Metres	Galvanised Steel	
Y	12	STREET LIGHTING	NEW CLOSE	GRIMSBY	526142.45	407724.54	1995		54032	Urbis	Axia 8 LED 350mA	10 Watts	6.00 Metres	Galvanised Steel	
Y	13	STREET LIGHTING	NEW CLOSE	GRIMSBY	526153.21	407722.96	1995		54034	Urbis	Axia 8 LED 350mA	10 Watts	6.00 Metres	Galvanised Steel	
Y	14	STREET LIGHTING	NEW CLOSE	GRIMSBY	526156.25	407700.74	1995		54035	Urbis	Axia 8 LED 350mA	10 Watts	6.00 Metres	Galvanised Steel	

Y	15	STREET LIGHTING	NEW CLOSE	GRIMSBY	526157.64	407672.89	1995		54024	Urbis	Axia 16 LED 350mA	19 Watts	5.00 Metres	Galvanised Steel	
Y	1	STREET LIGHTING	NEWTON GROVE	GRIMSBY	526211.69	407678.15	1993		54164	Urbis	Axia 16 LED 350mA	19 Watts	6.00 Metres	Galvanised Steel	
Y	2	STREET LIGHTING	NEWTON GROVE	GRIMSBY	526243.46	407674.61	1992		61818	Urbis	Axia 16 LED 350mA	19 Watts	6.00 Metres	Galvanised Steel	
Y	3	STREET LIGHTING	NEWTON GROVE	GRIMSBY	526276.88	407683.91	1993		54165	Urbis	Axia 16 LED 350mA	19 Watts	6.00 Metres	Galvanised Steel	
Y	1	STREET LIGHTING	PARK AVENUE	GRIMSBY	527018.17	408051.59	1986		54604	1 Urbis LED	Axia 16 LED 500mA	28 Watts	6.00 Metres	Galvanised Steel	
Y	2	STREET LIGHTING	PARK AVENUE	GRIMSBY	527012.22	408023.62	1986		54605	1 Urbis LED	Axia 16 LED 500mA	28 Watts	6.00 Metres	Galvanised Steel	
Y	3	STREET LIGHTING	PARK AVENUE	GRIMSBY	527024.38	407993.62	1986		54606	1 Urbis LED	Axia 16 LED 500mA	28 Watts	6.00 Metres	Galvanised Steel	
Y	4	STREET LIGHTING	PARK AVENUE	GRIMSBY	527017.79	407966.47	1986		54607	1 Urbis LED	Axia 16 LED 500mA	28 Watts	6.00 Metres	Galvanised Steel	
Y	5	STREET LIGHTING	PARK AVENUE	GRIMSBY	527030.71	407936.72	1986		54608	1 Urbis LED	Axia 16 LED 500mA	28 Watts	6.00 Metres	Galvanised Steel	
Y	6	STREET LIGHTING	PARK AVENUE	GRIMSBY	527024.38	407909.32	1986		54609	1 Urbis LED	Axia 16 LED 500mA	28 Watts	6.00 Metres	Galvanised Steel	
Y	7	STREET LIGHTING	PARK AVENUE	GRIMSBY	527036.66	407878.18	1986		54610	1 Urbis LED	Axia 16 LED 500mA	28 Watts	6.00 Metres	Galvanised Steel	
Y	8	STREET LIGHTING	PARK AVENUE	GRIMSBY	527030.45	407851.03	1986		54611	1 Urbis LED	Axia 16 LED 500mA	28 Watts	6.00 Metres	Galvanised Steel	
Y	9	STREET LIGHTING	PARK AVENUE	GRIMSBY	527042.35	407825.65	1986		54612	1 Urbis LED	Axia 16 LED 500mA	28 Watts	6.00 Metres	Galvanised Steel	
Y	10	STREET LIGHTING	PARK AVENUE	GRIMSBY	527036.66	407794.52	1986		54613	1 Urbis LED	Axia 16 LED 500mA	28 Watts	6.00 Metres	Galvanised Steel	
Y	11	STREET LIGHTING	PARK AVENUE	GRIMSBY	527049.19	407760.72	1986		54614	1 Urbis LED	Axia 16 LED 500mA	28 Watts	6.00 Metres	Galvanised Steel	
Y	12	STREET LIGHTING	PARK AVENUE	GRIMSBY	527043.37	407729.46	1986		54615	1 Urbis LED	Axia 16 LED 500mA	28 Watts	6.00 Metres	Galvanised Steel	
Y	1	STREET LIGHTING	RESTON GROVE	GRIMSBY	525602.98	407560.02	1997		56023	Urbis	Axia 16 LED 350mA	19 Watts	5.00 Metres	Galvanised Steel	
Y	2	STREET LIGHTING	RESTON GROVE	GRIMSBY	525629.44	407565.53	1997		56024	Urbis	Axia 16 LED 350mA	19 Watts	5.00 Metres	Galvanised Steel	
Y	3	STREET LIGHTING	RESTON GROVE	GRIMSBY	525632.73	407550.4	1997		56025	Urbis	Axia 16 LED 350mA	19 Watts	5.00 Metres	Galvanised Steel	
Y	4	STREET LIGHTING	RESTON GROVE	GRIMSBY	525605.89	407544.83	1997		56026	Urbis	Axia 16 LED 350mA	19 Watts	5.00 Metres	Galvanised Steel	
Y	1	STREET LIGHTING	ROOKERY AVENUE	GRIMSBY	526680.38	407443.58	1988		56232	Urbis	Axia 16 LED 350mA	19 Watts	5.00 Metres	Galvanised Steel	
Y	2	STREET LIGHTING	ROOKERY AVENUE	GRIMSBY	526680.74	407413.11	2021	03/12/2021	56233	Urbis	Axia 16 LED 350mA	19 Watts	6.00 Metres	Galvanised Steel	
Y	3	STREET LIGHTING	ROOKERY AVENUE	GRIMSBY	526681.3	407392.21	1988		56234	Urbis	Axia 16 LED 350mA	19 Watts	5.00 Metres	Galvanised Steel	
Y	4	STREET LIGHTING	ROOKERY AVENUE	GRIMSBY	526679.82	407365.05	1988		56235	Urbis	Axia 16 LED 350mA	19 Watts	5.00 Metres	Galvanised Steel	
Y	1	STREET LIGHTING	RUPERT ROAD	GRIMSBY	526614.83	407376.1	1988		56411	Urbis	Axia 16 LED 350mA	19 Watts	5.00 Metres	Galvanised Steel	
Y	2	STREET LIGHTING	RUPERT ROAD	GRIMSBY	526619.43	407401.6	1988		56412	Urbis	Axia 16 LED 350mA	19 Watts	5.00 Metres	Galvanised Steel	
Y	3	STREET LIGHTING	RUPERT ROAD	GRIMSBY	526614.46	407429.13	1988		56413	Urbis	Axia 16 LED 350mA	19 Watts	5.00 Metres	Galvanised Steel	
Y	4	STREET LIGHTING	RUPERT ROAD	GRIMSBY	526622.19	407454.9	1988		56414	Urbis	Axia 16 LED 350mA	19 Watts	5.00 Metres	Galvanised Steel	
Y	1	STREET LIGHTING	ST HELENS AVENUE	GRIMSBY	526576.12	407292.56	2006		57690	Urbis	Axia 16 LED 350mA	19 Watts	5.00 Metres	Stainless Steel	
Y	2	STREET LIGHTING	ST HELENS AVENUE	GRIMSBY	526602.27	407294.77	1989		57691	Urbis	Axia 16 LED 350mA	19 Watts	5.00 Metres	Galvanised Steel	
Y	3	STREET LIGHTING	ST HELENS AVENUE	GRIMSBY	526631.36	407294.49	1989		57692	Urbis	Axia 16 LED 350mA	19 Watts	5.00 Metres	Galvanised Steel	
Y	4	STREET LIGHTING	ST HELENS AVENUE	GRIMSBY	526658.79	407295.51	1989		57693	Urbis	Axia 16 LED 350mA	19 Watts	5.00 Metres	Galvanised Steel	
Y	5	STREET LIGHTING	ST HELENS AVENUE	GRIMSBY	526688.8	407296.24	1989		57694	Urbis	Axia 16 LED 350mA	19 Watts	5.00 Metres	Galvanised Steel	
Y	6	STREET LIGHTING	ST HELENS AVENUE	GRIMSBY	526705.19	407293.76	1989		57695	Urbis	Axia 16 LED 350mA	19 Watts	5.00 Metres	Galvanised Steel	
Y	1	STREET LIGHTING	SECOND AVENUE	GRIMSBY	525957.66	407868.76	1993		56841	1 Urbis LED	Teceo 40 LED 500mA	64 Watts	8.00 Metres	Galvanised Steel	
Y	2	STREET LIGHTING	SECOND AVENUE	GRIMSBY	525963.23	407842.81	1993		56842	1 Urbis LED	Teceo 40 LED 500mA	64 Watts	8.00 Metres	Galvanised Steel	
Y	3	STREET LIGHTING	SECOND AVENUE	GRIMSBY	525969.56	407812.43	1993		56843	1 Urbis LED	Teceo 40 LED 500mA	64 Watts	8.00 Metres	Galvanised Steel	
Y	4	STREET LIGHTING	SECOND AVENUE	GRIMSBY	525980.7	407762.87	1993		56844	1 Urbis LED	Teceo 40 LED 500mA	64 Watts	8.00 Metres	Galvanised Steel	
Y	5	STREET LIGHTING	SECOND AVENUE	GRIMSBY	525971.58	407732.93	1993		56845	1 Urbis LED	Teceo 40 LED 500mA	64 Watts	8.00 Metres	Galvanised Steel	
Y	6	STREET LIGHTING	SECOND AVENUE	GRIMSBY	525992.97	407704.77	1993		56846	1 Urbis LED	Teceo 40 LED 500mA	64 Watts	8.00 Metres	Galvanised Steel	
Y	7	STREET LIGHTING	SECOND AVENUE	GRIMSBY	525983.23	407678.06	1993		56847	1 Urbis LED	Teceo 40 LED 500mA	64 Watts	8.00 Metres	Galvanised Steel	
Y	8	STREET LIGHTING	SECOND AVENUE	GRIMSBY	526003.73	407653.82	1993		56848	1 Urbis LED	Teceo 40 LED 500mA	64 Watts	8.00 Metres	Galvanised Steel	
Y	9	STREET LIGHTING	SECOND AVENUE	GRIMSBY	525994.49	407626.29	1993		56849	1 Urbis LED	Teceo 40 LED 500mA	64 Watts	8.00 Metres	Galvanised Steel	
Y	10	STREET LIGHTING	SECOND AVENUE	GRIMSBY	526004.59	407557.67	1993		56850	1 Urbis LED	Teceo 32 LED 500mA	52 Watts	8.00 Metres	Galvanised Steel	
Y	11	STREET LIGHTING	SECOND AVENUE	GRIMSBY	526027.12	407562.35	1993		56851	1 Urbis LED	Teceo 32 LED 500mA	52 Watts	8.00 Metres	Galvanised Steel	
Y	12	STREET LIGHTING	SECOND AVENUE	GRIMSBY	526008.01	407538.24	1993		56852	1 Urbis LED	Teceo 32 LED 500mA	52 Watts	8.00 Metres	Galvanised Steel	
Y	13	STREET LIGHTING	SECOND AVENUE	GRIMSBY	526032.31	407542.79	1993		56853	1 Urbis LED	Teceo 32 LED 500mA	52 Watts	8.00 Metres	Galvanised Steel	
Y	14	STREET LIGHTING	SECOND AVENUE	GRIMSBY	526012.31	407518.05	1993		56854	1 Urbis LED	Teceo 32 LED 500mA	52 Watts	8.00 Metres	Galvanised Steel	
Y	15	STREET LIGHTING	SECOND AVENUE	GRIMSBY	526036.61	407524	1993		56855	1 Urbis LED	Teceo 32 LED 500mA	52 Watts	8.00 Metres	Galvanised Steel	
Y	16	STREET LIGHTING	SECOND AVENUE	GRIMSBY	526038.51	407499.88	1993		56856	1 Urbis LED	Teceo 40 LED 500mA	64 Watts	8.00 Metres	Galvanised Steel	
Y	17	STREET LIGHTING	SECOND AVENUE	GRIMSBY	526042.56	407474.06	1993		56857	1 Urbis LED	Teceo 40 LED 500mA	64 Watts	8.00 Metres	Galvanised Steel	
Y	18	STREET LIGHTING	SECOND AVENUE	GRIMSBY	526048.39	407447.16	1993		56858	1 Urbis LED	Teceo 40 LED 500mA	64 Watts	8.00 Metres	Galvanised Steel	
Y	19	STREET LIGHTING	SECOND AVENUE	GRIMSBY	526054.59	407418.17	1993		56859	1 Urbis LED	Teceo 40 LED 500mA	64 Watts	8.00 Metres	Galvanised Steel	
Y	20	STREET LIGHTING	SECOND AVENUE	GRIMSBY	526060.41	407392.16	1993		56860	1 Urbis LED	Teceo 40 LED 500mA	64 Watts	8.00 Metres	Galvanised Steel	
Y	21	STREET LIGHTING	SECOND AVENUE	GRIMSBY	526066.1	407364.76	1993		56861	1 Urbis LED	Teceo 40 LED 500mA	64 Watts	8.00 Metres	Galvanised Steel	
Y	22	STREET LIGHTING	SECOND AVENUE	GRIMSBY	526071.67	407339.25	1993		56862	1 Urbis LED	Teceo 40 LED 500mA	64 Watts	8.00 Metres	Galvanised Steel	
Y	23	STREET LIGHTING	SECOND AVENUE	GRIMSBY	526062.18	407310.77	1993		56863	1 Urbis LED	Teceo 40 LED 500mA	64 Watts	8.00 Metres	Galvanised Steel	
Y	24	STREET LIGHTING	SECOND AVENUE	GRIMSBY	526082.68	407287.8	1993		56864	1 Urbis LED	Teceo 40 LED 500mA	64 Watts	8.00 Metres	Galvanised Steel	
Y	25	STREET LIGHTING	SECOND AVENUE	GRIMSBY	526073.7	407257.67	1993		56865	1 Urbis LED	Teceo 40 LED 500mA	64 Watts	8.00 Metres	Galvanised Steel	
Y	26	STREET LIGHTING	SECOND AVENUE	GRIMSBY	526079.39	407230.9	1993		56866	1 Urbis LED	Teceo 40 LED 500mA	64 Watts	8.00 Metres	Galvanised Steel	
Y	27	STREET LIGHTING	SECOND AVENUE	GRIMSBY	526100.4	407203.74	1993		56867	1 Urbis LED	Teceo 40 LED 500mA	64 Watts	8.00 Metres	Galvanised Steel	
Y	28	STREET LIGHTING	SECOND AVENUE	GRIMSBY	526105.59	407178.24	1993		56868	1 Urbis LED	Teceo 40 LED 500mA	64 Watts	8.00 Metres	Galvanised Steel	
Y	1	STREET LIGHTING	SYCAMORE AVENUE	GRIMSBY	526526.32	407151.42	1996		58710	Urbis	Axia 16 LED 350mA	19 Watts	5.00 Metres	Galvanised Steel	
Y	2	STREET LIGHTING	SYCAMORE AVENUE	GRIMSBY	526501.1	407147.37	1996		58711	Urbis	Axia 16 LED 350mA	19 Watts	5.00 Metres	Galvanised Steel	
Y	3	STREET LIGHTING	SYCAMORE AVENUE	GRIMSBY	526474.22	407157.22	1996		58712	Urbis	Axia 16 LED 350mA	19 Watts	5.00 Metres	Galvanised Steel	
Y	4	STREET LIGHTING	SYCAMORE AVENUE	GRIMSBY	526446.23	407160.26	1996		58713	Urbis	Axia 16 LED 350mA	19 Watts	5.00 Metres	Galvanised Steel	
Y	1	STREET LIGHTING	WALMSGATE	GRIMSBY	525553.94	407744.15	1997		59718	1 Urbis LED	Teceo 40 LED 500mA	64 Watts	8.00 Metres	Galvanised Steel	
Y	2	STREET LIGHTING	WALMSGATE	GRIMSBY	525546.2	407712.39	1997		59719	1 Urbis LED	Teceo 40 LED 500mA	64 Watts	8.00 Metres	Galvanised Steel	
Y	3	STREET LIGHTING	WALMSGATE	GRIMSBY	525569.03	407693.05	1997		59720	1 Urbis LED	Teceo 40 LED 500mA	64 Watts	8.00 Metres	Galvanised Steel	
Y	4	STREET LIGHTING	WALMSGATE	GRIMSBY	525557.99	407658.35	1997		59721	1 Urbis LED	Teceo 40 LED 500mA	64 Watts	8.00 Metres	Galvanised Steel	
Y	5	STREET LIGHTING	WALMSGATE	GRIMSBY	525581.92	407633.4	1997		59722	1 Urbis LED	Teceo 40 LED 500mA	64 Watts	8.00 Metres	Galvanised Steel	
Y	6	STREET LIGHTING	WALMSGATE	GRIMSBY	525570.14	407601.64	1997		59723	1 Urbis LED	Teceo 40 LED 500mA	64 Watts	8.00 Metres	Galvanised Steel	
Y	7	STREET LIGHTING	WALMSGATE	GRIMSBY	525594.62	407571.91	1997		59724	1 Urbis LED	Teceo 40 LED 500mA	64 Watts	8.00 Metres	Galvanised Steel	
Y	8	STREET LIGHTING	WALMSGATE	GRIMSBY	525581.74	407546.04	1997		59725	1 Urbis LED	Teceo 40 LED 500mA	64 Watts	8.00 Metres	Galvanised Steel	
Y	9	STREET LIGHTING	WALMSGATE	GRIMSBY	525586.71	407521.83	1997		59726	1 Urbis LED	Teceo 40 LED 500mA	64 Watts	8.00 Metres	Galvanised Steel	
Y	10	STREET LIGHTING	WALMSGATE	GRIMSBY	525592.23	407495.78	1997		59727	1 Urbis LED	Teceo 40 LED 500mA	64 Watts	8.00 Metres	Galvanised Steel	
Y	1	STREET LIGHTING	WALMSGATE WALK	GRIMSBY	525617.03	407672.68	1997		59735	Urbis	Axia 8 LED 350mA	10 Watts	5.00 Metres	Galvanised Steel	
Y	2	STREET LIGHTING	WALMSGATE WALK	GRIMSBY	525622.09	407648.44	1997		59736	Urbis	Axia 8 LED 350mA	10 Watts	5.00 Metres	Galvanised Steel	
Y	3	STREET LIGHTING	WALMSGATE WALK	GRIMSBY	525631.08	407606.42	1997		59737	Urbis	Axia 8 LED 350mA	10 Watts	5.00 Metres	Galvanised Steel	
Y	4	STREET LIGHTING	WALMSGATE WALK	GRIMSBY	525636.4	407580.53	1997		59738	Urbis	Axia 8 LED 350mA	10 Watts	5.00 Metres	Galvanised Steel	
Y	1	STREET LIGHTING	WALTON GROVE	GRIMSBY	526290.86	407562.54	1995		59795	Urbis	Axia 16 LED 350mA	19 Watts	5.00 Metres	Galvanised Steel	
Y	2	STREET LIGHTING	WALTON GROVE	GRIMSBY	526308.97	407586.33	2022	14/02/2022	68812	Urbis	Axia 16 LED 350mA	19 Watts	6.00 Metres	Galvanised Steel	
Y	3	STREET LIGHTING	WALTON GROVE	GRIMSBY	526314.54	407616.34	1995		59797	Urbis	Axia 16 LED 350mA	19 Watts	5.00 Metres	Galvanised Steel	
Y	1	STREET LIGHTING	WALMSGATE GARDENS	GRIMSBY	525624.11	407522.13	1999		59728	1 Urbis LED	Axia 16 LED 500mA	28 Watts	5.00 Metres	Galvanised Steel	
Y	2	STREET LIGHTING	WALMSGATE GARDENS	GRIMSBY	525652.33	407527.57	1999		59729	1 Urbis LED	Axia 16 LED 500mA	28 Watts	5.00 Metres	Galvanised Steel	
Y	1	STREET LIGHTING	WALMSGATE PLACE	GRIMSBY	525561.69	407581.12	1997		59730	Urbis	Axia 16 LED 350mA	19 Watts	5.00 Metres	Galvanised Steel	
Y	2	STREET LIGHTING	WALMSGATE PLACE	GRIMSBY	525520.3	407624.66	1997		59731	Urbis	Axia 8 LED 350mA	10 Watts	5.00 Metres	Galvanised Steel	
Y	3	STREET LIGHTING	WALMSGATE PLACE	GRIMSBY	525528.78	407597.58	1997		59732	Urbis	Axia 8 LED 350mA	10 Watts	5.00 Metres	Galvanised Steel	
Y	4	STREET LIGHTING	WALMSGATE PLACE	GRIMSBY	525539.99	407558.63	1997		59733	Urbis	Axia 16 LED 350mA	19 Watts	5.00 Metres	Galvanised Steel	
Y	5	STREET LIGHTING	WALMSGATE PLACE	GRIMSBY	525549.11	407527.44	1997		59734	Urbis	Axia 16 LED 350mA	19 Watts	5.00 Metres	Galvanised Steel	
Y	1	STREET LIGHTING	WESTFIELD AVENUE	GRIMSBY	526530.02	407340.27	1997		60390	Urbis	Axia 16 LED 350mA	19 Watts	5.00 Metres	Galvanised Steel	
Y	2	STREET LIGHTING	WESTFIELD AVENUE	GRIMSBY	526501.11	407338.62	1997		60391	Urbis	Axia 16 LED 350mA	19 Watts	5.00 Metres	Galvanised Steel	
Y	3	STREET LIGHTING	WESTFIELD AVENUE	GRIMSBY	526469.63	407337.23	1997		60392	Urbis	Axia 16 LED 350mA	19 Watts	5.00 Metres	Galvanised Steel	
Y	4	STREET LIGHTING	WESTFIELD AVENUE	GRIMSBY	526440.54	407335.67	1997		60393	Urbis	Axia 16 LED 350mA	19 Watts	5.00 Metres	Galvanised Steel	
Y	1	STREET LIGHTING	LEIGHTON GROVE	GRIMSBY	526332.89	407742.42	1993		52478	Urbis	Axia 16 LED 350mA	19 Watts	5.00 Metres	Steel	
Y	2	STREET LIGHTING	LEIGHTON GROVE	GRIMSBY	526350.86	407755.2	1993		52479	Urbis	Axia 16 LED 350mA	19 Watts	5.00 Metres	Steel	
Y	3	STREET LIGHTING	LEIGHTON GROVE	GRIMSBY	526358.46	407767.54	2006		52480	Urbis	Axia 16 LED 350mA	19 Watts	6.00 Metres	Stainless Steel	
Y	1	STREET LIGHTING	ST MARTINS CRESCENT	GRIMSBY	526452.84	407484.31	2015	30/07/2015	57811	Urbis	Axia 16 LED 350mA	19 Watts	6.00 Metres	Galvanised Steel	
Y	2	STREET LIGHTING	ST MARTINS CRESCENT	GRIMSBY	526470.94	407452.16	2015	30/07/2015	57812	Urbis	Axia 16 LED 350mA	19 Watts	6.00 Metres	Galvanised Steel	
Y	3	STREET LIGHTING	ST MARTINS CRESCENT	GRIMSBY	526444.23	407445.57	2015	30/07/2015	57813	Urbis	Axia 16 LED 350mA	19 Watts	6.00 Metres	Galvanised Steel	
Y	1	STREET LIGHTING	CORNWELL CLOSE	GRIMSBY	526229.41	407465.71	1994		46720	1 Urbis LED	Axia 16 LED 500mA	28 Watts	6.00 Metres	Galvanised Steel	
Y	2	STREET LIGHTING	CORNWELL CLOSE	GRIMSBY	526258.77	407466.03	1994		46721	1 Urbis LED	Axia 16 LED 500mA	28 Watts	6.00 Metres	Galvanised Steel	
Y	3	STREET LIGHTING	CORNWELL CLOSE	GRIMSBY	526291.43	407465.71	1994		46722	1 Urbis LED	Axia 16 LED 500mA	28 Watts	6.00 Metres	Galvanised Steel	
Y	4	STREET LIGHTING	CORNWELL CLOSE	GRIMSBY	526321.05	407480.21	1994		46723	Urbis	Axia 8 LED 350mA	10 Watts	5.00 Metres	Galvanised Steel	
Y	5	STREET LIGHTING	CORNWELL CLOSE	GRIMSBY	526284.72	407488.75	1994		46724	Urbis	Axia 8 LED 350mA	10 Watts	5.00 Metres	Galvanised Steel	
Y	6	STREET LIGHTING	CORNWELL CLOSE	GRIMSBY	526271.05	407489.07	1994		46725	Urbis	Axia 8 LED 350mA	10 Watts	5.00 Metres	Galvanised Steel	
Y	7	STREET LIGHTING	CORNWELL CLOSE	GRIMSBY	526253.21	407501.79	1994		46726	Urbis	Axia 8 LED 350mA	10 Watts	5.00 Metres	Galvanised Steel	
Y	1	STREET LIGHTING	CUMBERLAND AVENUE	GRIMSBY	526919.88	408049.53	1988		47156	Urbis	Axia 16 LED 350mA	19 Watts	6.00 Metres	Galvanised Steel	
Y	2	STREET LIGHTING	CUMBERLAND AVENUE	GRIMSBY	526911.66	408017.38	1988		47157	Urbis	Axia 16 LED 350mA	19 Watts	6.00 Metres	Galvanised Steel	
Y	3	STREET LIGHTING	CUMBERLAND AVENUE	GRIMSBY	526926.21	407991.5	1988		47158	Urbis	Axia 16 LED 350mA	19 Watts	6.00 Metres	Galvanised Steel	

Y	4	STREET LIGHTING	CUMBERLAND AVENUE	GRIMSBY	526929.25	407961.94	1988		47159	Urbis	Axia 16 LED 350mA	19 Watts	6.00 Metres	Galvanised Steel	
Y	5	STREET LIGHTING	CUMBERLAND AVENUE	GRIMSBY	526932.92	407927.57	1988		47160	Urbis	Axia 16 LED 350mA	19 Watts	6.00 Metres	Galvanised Steel	
Y	6	STREET LIGHTING	CUMBERLAND AVENUE	GRIMSBY	526924.31	407898.27	1988		47161	Urbis	Axia 16 LED 350mA	19 Watts	6.00 Metres	Galvanised Steel	
Y	7	STREET LIGHTING	CUMBERLAND AVENUE	GRIMSBY	526927.22	407868.78	1988		47162	Urbis	Axia 16 LED 350mA	19 Watts	6.00 Metres	Galvanised Steel	
Y	8	STREET LIGHTING	CUMBERLAND AVENUE	GRIMSBY	526930.64	407838.71	1988		47163	Urbis	Axia 16 LED 350mA	19 Watts	6.00 Metres	Galvanised Steel	
Y	9	STREET LIGHTING	CUMBERLAND AVENUE	GRIMSBY	526945.83	407809.6	1988		47164	Urbis	Axia 16 LED 350mA	19 Watts	6.00 Metres	Galvanised Steel	
Y	10	STREET LIGHTING	CUMBERLAND AVENUE	GRIMSBY	526950.26	407776.25	1988		47165	Urbis	Axia 16 LED 350mA	19 Watts	6.00 Metres	Galvanised Steel	
Y	1	STREET LIGHTING	ANTRIM WAY	GRIMSBY	526727.21	406913.65	2006		43277	1 Urbis LED	Axia 16 LED 500mA	28 Watts	6.00 Metres	Stainless Steel	
Y	2	STREET LIGHTING	ANTRIM WAY	GRIMSBY	526723.66	406883.54	2006		43278	1 Urbis LED	Axia 16 LED 500mA	28 Watts	6.00 Metres	Stainless Steel	
Y	3	STREET LIGHTING	ANTRIM WAY	GRIMSBY	526718.98	406844.79	2006		43279	1 Urbis LED	Axia 16 LED 500mA	28 Watts	6.00 Metres	Stainless Steel	
Y	4	STREET LIGHTING	ANTRIM WAY	GRIMSBY	526704.72	406808.93	2006		43280	1 Urbis LED	Axia 16 LED 500mA	28 Watts	6.00 Metres	Stainless Steel	
Y	5	STREET LIGHTING	ANTRIM WAY	GRIMSBY	526709.86	406768.74	2006		43281	1 Urbis LED	Axia 16 LED 500mA	28 Watts	6.00 Metres	Stainless Steel	
Y	6	STREET LIGHTING	ANTRIM WAY	GRIMSBY	526706.26	406738.57	2006		43282	1 Urbis LED	Axia 16 LED 500mA	28 Watts	6.00 Metres	Stainless Steel	
Y	7	STREET LIGHTING	ANTRIM WAY	GRIMSBY	526702.56	406707.86	2006		43283	1 Urbis LED	Axia 16 LED 500mA	28 Watts	6.00 Metres	Stainless Steel	
Y	1	STREET LIGHTING	BEATTY AVENUE	GRIMSBY	526806.3	405465.88	1963		43856	Urbis	Axia 16 LED 350mA	19 Watts	5.00 Metres	Galvanised Steel	
Y	2	STREET LIGHTING	BEATTY AVENUE	GRIMSBY	526786.04	405448.6	1963		43857	Urbis	Axia 16 LED 350mA	19 Watts	5.00 Metres	Galvanised Steel	
Y	3	STREET LIGHTING	BEATTY AVENUE	GRIMSBY	526756.43	405446.77	1963		43858	Urbis	Axia 16 LED 350mA	19 Watts	5.00 Metres	Galvanised Steel	
Y	1	STREET LIGHTING	OATFIELD CLOSE	GRIMSBY	525605.87	405618.9	2005		54336	1 Urbis LED	Axia 16 LED 500mA	28 Watts	6.00 Metres	Stainless Steel	
Y	2	STREET LIGHTING	OATFIELD CLOSE	GRIMSBY	525618.73	405598.08	2005		54337	1 Urbis LED	Axia 16 LED 500mA	28 Watts	6.00 Metres	Stainless Steel	
Y	3	STREET LIGHTING	OATFIELD CLOSE	GRIMSBY	525633.33	405572.21	2005		54338	1 Urbis LED	Axia 16 LED 500mA	28 Watts	6.00 Metres	Stainless Steel	
Y	4	STREET LIGHTING	OATFIELD CLOSE	GRIMSBY	525653.28	405558.88	2005		54339	1 Urbis LED	Axia 16 LED 500mA	28 Watts	6.00 Metres	Stainless Steel	
Y	5	STREET LIGHTING	OATFIELD CLOSE	GRIMSBY	525670.72	405574.89	2005		54340	1 Urbis LED	Axia 16 LED 500mA	28 Watts	6.00 Metres	Stainless Steel	
Y	6	STREET LIGHTING	OATFIELD CLOSE	GRIMSBY	525691.56	405593.59	2005		54341	1 Urbis LED	Axia 16 LED 500mA	28 Watts	6.00 Metres	Stainless Steel	
Y	7	STREET LIGHTING	OATFIELD CLOSE	GRIMSBY	525710.26	405604.8	2005		54342	1 Urbis LED	Axia 16 LED 500mA	28 Watts	6.00 Metres	Stainless Steel	
Y	1	STREET LIGHTING	BRIAR LANE	GRIMSBY	525602.02	405673.74	1988		44683	Urbis	Axia 16 LED 350mA	19 Watts	5.00 Metres	Galvanised Steel	
Y	2	STREET LIGHTING	BRIAR LANE	GRIMSBY	525568.35	405684.69	1988		44684	Urbis	Axia 16 LED 350mA	19 Watts	5.00 Metres	Galvanised Steel	
Y	3	STREET LIGHTING	BRIAR LANE	GRIMSBY	525543.79	405701.97	1988		44685	Urbis	Axia 16 LED 350mA	19 Watts	5.00 Metres	Galvanised Steel	
Y	4	STREET LIGHTING	BRIAR LANE	GRIMSBY	525530.63	405704.69	1988		44686	Urbis	Axia 16 LED 350mA	19 Watts	5.00 Metres	Galvanised Steel	
Y	1	STREET LIGHTING	MEADOW DRIVE	GRIMSBY	525679.59	405676.35	1988		53475	Urbis	Axia 16 LED 350mA	19 Watts	6.00 Metres	Galvanised Steel	
Y	2	STREET LIGHTING	MEADOW DRIVE	GRIMSBY	525644.02	405673.25	1988		53476	Urbis	Axia 16 LED 350mA	19 Watts	6.00 Metres	Galvanised Steel	
Y	3	STREET LIGHTING	MEADOW DRIVE	GRIMSBY	525616.17	405655.36	1988		53477	Urbis	Axia 16 LED 350mA	19 Watts	6.00 Metres	Galvanised Steel	
Y	1	STREET LIGHTING	CHESTER GRANGE	GRIMSBY	527208.23	406168.26	1988		45827	Urbis	Axia 16 LED 350mA	19 Watts	5.00 Metres	Galvanised Steel	
Y	2	STREET LIGHTING	CHESTER GRANGE	GRIMSBY	527230.32	406170.37	1988		45828	Urbis	Axia 16 LED 350mA	19 Watts	5.00 Metres	Galvanised Steel	
Y	3	STREET LIGHTING	CHESTER GRANGE	GRIMSBY	527253.15	406182.34	1988		45829	Urbis	Axia 16 LED 350mA	19 Watts	5.00 Metres	Galvanised Steel	
Y	4	STREET LIGHTING	CHESTER GRANGE	GRIMSBY	527274.33	406190.63	1988		45830	Urbis	Axia 16 LED 350mA	19 Watts	5.00 Metres	Galvanised Steel	
Y	5	STREET LIGHTING	CHESTER GRANGE	GRIMSBY	527297.34	406193.85	1988		45831	Urbis	Axia 16 LED 350mA	19 Watts	5.00 Metres	Galvanised Steel	
Y	1	STREET LIGHTING	BLUEBELL ROAD	GRIMSBY	525688.13	405703.84	2012	01/06/2012	68619	Urbis	Axia 16 LED 350mA	19 Watts	6.00 Metres	Galvanised Steel	
Y	2	STREET LIGHTING	BLUEBELL ROAD	GRIMSBY	525686.87	405731.69	2012	01/06/2012	68700	Urbis	Axia 16 LED 350mA	19 Watts	6.00 Metres	Galvanised Steel	
Y	3	STREET LIGHTING	BLUEBELL ROAD	GRIMSBY	525670.21	405745.61	2012	01/06/2012	68701	Urbis	Axia 16 LED 350mA	19 Watts	6.00 Metres	Galvanised Steel	
Y	4	STREET LIGHTING	BLUEBELL ROAD	GRIMSBY	525679.69	405765.86	2013	01/06/2013	68721	Urbis	Axia 16 LED 350mA	19 Watts	6.00 Metres	Galvanised Steel	
Y	5	STREET LIGHTING	BLUEBELL ROAD	GRIMSBY	525670.62	405785.48	2013	01/06/2013	68722	Urbis	Axia 16 LED 350mA	19 Watts	6.00 Metres	Galvanised Steel	
Y	6	STREET LIGHTING	BLUEBELL ROAD	GRIMSBY	525680.54	405766.28	2013	01/06/2013	68723	Urbis	Axia 16 LED 350mA	19 Watts	6.00 Metres	Galvanised Steel	
Y	7	STREET LIGHTING	BLUEBELL ROAD	GRIMSBY	525669.15	405827.25	2012	01/06/2012	68703	Urbis	Axia 16 LED 350mA	19 Watts	6.00 Metres	Galvanised Steel	
Y	8	STREET LIGHTING	BLUEBELL ROAD	GRIMSBY	525682.65	405848.77	2012	01/06/2012	68704	Urbis	Axia 16 LED 350mA	19 Watts	6.00 Metres	Galvanised Steel	
Y	9	STREET LIGHTING	BLUEBELL ROAD	GRIMSBY	525664.08	405867.76	2012	01/06/2012	68705	Urbis	Axia 16 LED 350mA	19 Watts	6.00 Metres	Galvanised Steel	
Y	10	STREET LIGHTING	BLUEBELL ROAD	GRIMSBY	525674.42	405887.17	2013	01/06/2013	68724	Urbis	Axia 16 LED 350mA	19 Watts	6.00 Metres	Galvanised Steel	
Y	11	STREET LIGHTING	BLUEBELL ROAD	GRIMSBY	525660.29	405903.41	2013	01/06/2013	68725	Urbis	Axia 16 LED 350mA	19 Watts	6.00 Metres	Galvanised Steel	
Y	12	STREET LIGHTING	BLUEBELL ROAD	GRIMSBY	525670.41	405927.89	2013	01/06/2013	68726	Urbis	Axia 16 LED 350mA	19 Watts	6.00 Metres	Galvanised Steel	
Y	1	STREET LIGHTING	BELLFLOWER ROAD	GRIMSBY	525701.21	405849.41	2012	01/06/2012	68713	Urbis	Axia 16 LED 350mA	19 Watts	6.00 Metres	Galvanised Steel	
Y	2	STREET LIGHTING	BELLFLOWER ROAD	GRIMSBY	525713.24	405864.17	2012	01/06/2012	68714	Urbis	Axia 16 LED 350mA	19 Watts	6.00 Metres	Galvanised Steel	
Y	3	STREET LIGHTING	BELLFLOWER ROAD	GRIMSBY	525734.55	405870.71	2012	01/06/2012	68715	Urbis	Axia 16 LED 350mA	19 Watts	6.00 Metres	Galvanised Steel	
Y	4	STREET LIGHTING	BELLFLOWER ROAD	GRIMSBY	525760.09	405889.51	2019	01/04/2019	69856	Urbis	Axia 16 LED 500mA	28 Watts	6.00 Metres	Galvanised Steel	
Y	5	STREET LIGHTING	BELLFLOWER ROAD	GRIMSBY	525779.61	405923.97	2019	01/04/2019	69857	Urbis	Axia 16 LED 500mA	28 Watts	6.00 Metres	Galvanised Steel	
Y	6	STREET LIGHTING	BELLFLOWER ROAD	GRIMSBY	525776.71	405946.12	2021	01/09/2021	69864	Urbis	Axia 16 LED 500mA	28 Watts	6.00 Metres	Galvanised Steel	
Y	7	STREET LIGHTING	BELLFLOWER ROAD	GRIMSBY	525782.29	405981.15	2019	01/04/2019	69858	Urbis	Axia 16 LED 500mA	28 Watts	6.00 Metres	Galvanised Steel	
Y	8	STREET LIGHTING	BELLFLOWER ROAD	GRIMSBY	525771.04	406015.21	2019	01/04/2019	69859	Urbis	Axia 16 LED 500mA	28 Watts	6.00 Metres	Galvanised Steel	
Y	9	STREET LIGHTING	BELLFLOWER ROAD	GRIMSBY	525797.71	406038.14	2019	01/04/2019	69860	Urbis	Axia 16 LED 500mA	28 Watts	6.00 Metres	Galvanised Steel	
Y	10	STREET LIGHTING	BELLFLOWER ROAD	GRIMSBY	525810.41	406066.44	2019	01/04/2019	69861	Urbis	Axia 16 LED 500mA	28 Watts	6.00 Metres	Galvanised Steel	
Y	11	STREET LIGHTING	BELLFLOWER ROAD	GRIMSBY	525835.05	406089.93	2019	01/04/2019	69862	Urbis	Axia 16 LED 500mA	28 Watts	6.00 Metres	Galvanised Steel	
Y	12	STREET LIGHTING	BELLFLOWER ROAD	GRIMSBY	525853.91	406096.48	2019	01/04/2019	69863	Urbis	Axia 16 LED 500mA	28 Watts	6.00 Metres	Galvanised Steel	
Y	1	STREET LIGHTING	HORSESHOE CLOSE	GRIMSBY	525649.31	405761.01	2012	01/06/2012	68706	Urbis	Axia 16 LED 350mA	19 Watts	6.00 Metres	Galvanised Steel	
Y	2	STREET LIGHTING	HORSESHOE CLOSE	GRIMSBY	525628.43	405768.61	2012	01/06/2012	68707	Urbis	Axia 16 LED 350mA	19 Watts	6.00 Metres	Galvanised Steel	
Y	3	STREET LIGHTING	HORSESHOE CLOSE	GRIMSBY	525602.69	405770.08	2012	01/06/2012	68708	Urbis	Axia 16 LED 350mA	19 Watts	6.00 Metres	Galvanised Steel	
Y	4	STREET LIGHTING	HORSESHOE CLOSE	GRIMSBY	525586.02	405789.49	2012	01/06/2012	68709	Urbis	Axia 16 LED 350mA	19 Watts	6.00 Metres	Galvanised Steel	
Y	5	STREET LIGHTING	HORSESHOE CLOSE	GRIMSBY	525596.15	405813.75	2012	01/06/2012	68710	Urbis	Axia 16 LED 350mA	19 Watts	6.00 Metres	Galvanised Steel	
Y	6	STREET LIGHTING	HORSESHOE CLOSE	GRIMSBY	525607.96	405831.47	2012	01/06/2012	68711	Urbis	Axia 16 LED 350mA	19 Watts	6.00 Metres	Galvanised Steel	
Y	7	STREET LIGHTING	HORSESHOE CLOSE	GRIMSBY	525625.26	405816.71	2012	01/06/2012	68712	Urbis	Axia 16 LED 350mA	19 Watts	6.00 Metres	Galvanised Steel	
Y	1	STREET LIGHTING	FOXTAIL CLOSE	GRIMSBY	525718.94	405827.25	2014	01/06/2014	68717	Urbis	Teceo 16 LED 500mA	25 Watts	6.00 Metres	Galvanised Steel	
Y	2	STREET LIGHTING	FOXTAIL CLOSE	GRIMSBY	525720.62	405800.25	2014	01/06/2014	68716	Urbis	Axia 16 LED 350mA	19 Watts	6.00 Metres	Galvanised Steel	
Y	3	STREET LIGHTING	FOXTAIL CLOSE	GRIMSBY	525726.53	405773.67	2014	01/06/2014	68718	Urbis	Axia 24 LED 540mA	41 Watts	6.00 Metres	Galvanised Steel	
Y	4	STREET LIGHTING	FOXTAIL CLOSE	GRIMSBY	525728.85	405753.63	2014	01/06/2014	68719	Urbis	Axia 24 LED 540mA	41 Watts	6.00 Metres	Galvanised Steel	
Y	5	STREET LIGHTING	FOXTAIL CLOSE	GRIMSBY	525714.29	405744.77	2014	01/06/2014	68720	Urbis	Axia 24 LED 540mA	41 Watts	6.00 Metres	Galvanised Steel	
Y	1	STREET LIGHTING	CHARLES AVENUE	GRIMSBY	526640	406932	2000		45628	1 Urbis LED	Axia 16 LED 500mA	28 Watts	6.00 Metres	Galvanised Steel	
Y	2	STREET LIGHTING	CHARLES AVENUE	GRIMSBY	526627	406899	2000		45629	1 Urbis LED	Axia 16 LED 500mA	28 Watts	6.00 Metres	Galvanised Steel	
Y	3	STREET LIGHTING	CHARLES AVENUE	GRIMSBY	526635	406861	2009		45630	1 Urbis LED	Axia 16 LED 500mA	28 Watts	6.00 Metres	Stainless Steel	
Y	4	STREET LIGHTING	CHARLES AVENUE	GRIMSBY	526621	406825	2009		45631	1 Urbis LED	Axia 16 LED 500mA	28 Watts	6.00 Metres	Stainless Steel	
Y	5	STREET LIGHTING	CHARLES AVENUE	GRIMSBY	526628	406788	2009		45632	1 Urbis LED	Axia 16 LED 500mA	28 Watts	6.00 Metres	Stainless Steel	
Y	6	STREET LIGHTING	CHARLES AVENUE	GRIMSBY	526625	406752	2009		45633	1 Urbis LED	Axia 16 LED 500mA	28 Watts	6.00 Metres	Stainless Steel	
Y	7	STREET LIGHTING	CHARLES AVENUE	GRIMSBY	526613	406724	2009		45634	1 Urbis LED	Axia 16 LED 500mA	28 Watts	6.00 Metres	Stainless Steel	
Y	1	STREET LIGHTING	CHRISTINE PLACE	GRIMSBY	527044.96	405837.09	2015	30/07/2015	45932	Urbis	Axia 16 LED 350mA	19 Watts	6.00 Metres	Galvanised Steel	
Y	2	STREET LIGHTING	CHRISTINE PLACE	GRIMSBY	527016.22	405821.97	2015	30/07/2015	45933	Urbis	Axia 16 LED 350mA	19 Watts	6.00 Metres	Galvanised Steel	
Y	1	STREET LIGHTING	CHURCH LANE	SCARTHO	526554.24	406303.37	2006		46058	DW Windsor	Lancaster 15 LED	30 Watts	6.00 Metres	Steel	
Y	2	STREET LIGHTING	CHURCH LANE	SCARTHO	526575.48	406304.85	2006		46059	DW Windsor	Lancaster 15 LED	30 Watts	6.00 Metres	Steel	
Y	3	STREET LIGHTING	CHURCH LANE	SCARTHO	526602.4	406302.98	2006		46060	DW Windsor	Lancaster 15 LED	30 Watts	6.00 Metres	Steel	
Y	4	STREET LIGHTING	CHURCH LANE	SCARTHO	526622.19	406294.49	2006		46061	DW Windsor	Lancaster 15 LED	30 Watts	6.00 Metres	Steel	
Y	5	STREET LIGHTING	CHURCH LANE	SCARTHO	526642.65	406307.87	2006		46062	DW Windsor	Lancaster 15 LED	30 Watts	6.00 Metres	Steel	
Y	6	STREET LIGHTING	CHURCH LANE	SCARTHO	526685.49	406315.32	2006		46063	DW Windsor	Lancaster 15 LED	30 Watts	6.00 Metres	Steel	
Y	7	STREET LIGHTING	CHURCH LANE	SCARTHO	526673.78	406303.81	2006		46064	DW Windsor	Lancaster 15 LED	30 Watts	6.00 Metres	Steel	
Y	8	STREET LIGHTING	CHURCH LANE	SCARTHO	526682.21	406278.28	2006		46065	DW Windsor	Lancaster 15 LED	30 Watts	6.00 Metres	Steel	
Y	9	STREET LIGHTING	CHURCH LANE	SCARTHO	526693.96	406255.75	2006		46066	DW Windsor	Lancaster 15 LED	30 Watts	6.00 Metres	Steel	
Y	1	STREET LIGHTING	COLLEGE AVENUE	GRIMSBY	526830.23	405873.41	2017	30/06/2017	46373	1 Urbis LED	Axia 16 LED 500mA	28 Watts	6.00 Metres	Galvanised Steel	
Y	2	STREET LIGHTING	COLLEGE AVENUE	GRIMSBY	526854.79	405880.81	2017	30/06/2017	46374	1 Urbis LED	Axia 16 LED 500mA	28 Watts	6.00 Metres	Galvanised Steel	
Y	3	STREET LIGHTING	COLLEGE AVENUE	GRIMSBY	526885.64	405910.32	2002		46375	1 Urbis LED	Axia 16 LED 500mA	28 Watts	6.00 Metres	Stainless Steel	
Y	4	STREET LIGHTING	COLLEGE AVENUE	GRIMSBY	526524.75	409237.49	2018	28/12/2018	67267	Urbis	Axia 16 LED 500mA	28 Watts	6.00 Metres	Galvanised Steel	
Y	1	STREET LIGHTING	CONYERS AVENUE	GRIMSBY	526516	406705	2001		46622	1 Urbis LED	Axia 16 LED 500mA	28 Watts	6.00 Metres	Galvanised Steel	
Y	2	STREET LIGHTING	CONYERS AVENUE	GRIMSBY	526543.14	406712.8	1993		46623	1 Urbis LED	Axia 16 LED 500mA	28 Watts	6.00 Metres	Galvanised Steel	
Y	3	STREET LIGHTING	CONYERS AVENUE	GRIMSBY	526569	406701	2001		46624	1 Urbis LED	Axia 16 LED 500mA	28 Watts	6.00 Metres	Galvanised Steel	
Y	4	STREET LIGHTING	CONYERS AVENUE	GRIMSBY	526593	406710	2001		46625	1 Urbis LED	Axia 16 LED 500mA	28 Watts	6.00 Metres	Galvanised Steel	
Y	5	STREET LIGHTING	CONYERS AVENUE	GRIMSBY	526622.89	406693.83	2008		46626	1 Urbis LED	Axia 16 LED 500mA	28 Watts	6.00 Metres	Steel	
Y	6	STREET LIGHTING	CONYERS AVENUE	GRIMSBY	526658.43	406704.26	2008		46627	1 Urbis LED	Axia 16 LED 500mA	28 Watts	6.00 Metres	Steel	
Y	7	STREET LIGHTING	CONYERS AVENUE	GRIMSBY	526687.65	406690.25	2008		46628	1 Urbis LED	Axia 16 LED 500mA	28 Watts	6.00 Metres	Steel	
Y	8	STREET LIGHTING	CONYERS AVENUE	GRIMSBY	526718.22	406696.78	2008		46629	1 Urbis LED	Axia 16 LED 500mA	28 Watts	6.00 Metres	Steel	
Y	9	STREET LIGHTING	CONYERS AVENUE	GRIMSBY	526742.66	406677.71	2008		46630	1 Urbis LED	Axia 16 LED 500mA	28 Watts	6.00 Metres	Steel	
Y	1	STREET LIGHTING	CRAGSTON AVENUE	GRIMSBY	526555.42	407061.88	2006		46842	1 Urbis LED	Axia 16 LED 500mA	28 Watts	6.00 Metres	Stainless Steel	
Y	2	STREET LIGHTING	CRAGSTON AVENUE	GRIMSBY	526583.27	407049.39	2006		46843	1 Urbis LED	Axia 16 LED 500mA	28 Watts	6.00 Metres	Stainless Steel	
Y	3	STREET LIGHTING	CRAGSTON AVENUE	GRIMSBY	526614.52	407050.13	2006		46844	1 Urbis LED	Axia 16 LED 500mA	28 Watts	6.00 Metres	Stainless Steel	
Y	4	STREET LIGHTING	CRAGSTON AVENUE	GRIMSBY	526645.99	407046.29	2006		46845	1 Urbis LED	Axia 16 LED 500mA	28 Watts	6.00 Metres	Stainless Steel	
Y	5	STREET LIGHTING	CRAGSTON AVENUE	GRIMSBY	526679.23	407033.52	2006		46846	1 Urbis LED	Axia 16 LED 500mA	28 Watts	6.00 Metres	Stainless Steel	
Y	1	STREET LIGHTING	CRAKE AVENUE	GRIMSBY	526355.69	406452.54	2013	11/06/2013	46856	Urbis	Axia 16 LED 350mA	19 Watts	6.00 Metres	Steel	
Y	2	STREET LIGHTING	CRAKE AVENUE	GRIMSBY	526362.65	406452.09	2013	11/06/2013	68554	Urbis	Axia 16 LED 350mA	19 Watts	6.00 Metres	Steel	

Y	3	STREET LIGHTING	CRAKE AVENUE	GRIMSBY	526363.23	406519.72	2013	11/06/2013	46858	Urbis	Axia 16 LED 350mA	19 Watts	6.00 Metres	Steel	
Y	1	STREET LIGHTING	CROXBY AVENUE	GRIMSBY	526692.61	405604.84	2006		47144	Urbis	Axia 16 LED 350mA	19 Watts	6.00 Metres	Stainless Steel	
Y	2	STREET LIGHTING	CROXBY AVENUE	GRIMSBY	526712.71	405580.73	2006		47145	Urbis	Axia 16 LED 350mA	19 Watts	6.00 Metres	Stainless Steel	
Y	3	STREET LIGHTING	CROXBY AVENUE	GRIMSBY	526720.73	405556.26	2006		47146	Urbis	Axia 16 LED 350mA	19 Watts	6.00 Metres	Stainless Steel	
Y	4	STREET LIGHTING	CROXBY AVENUE	GRIMSBY	526747.14	405543.07	2006		47147	Urbis	Axia 16 LED 350mA	19 Watts	6.00 Metres	Stainless Steel	
Y	5	STREET LIGHTING	CROXBY AVENUE	GRIMSBY	526764.22	405517.55	2006		47148	Urbis	Axia 16 LED 350mA	19 Watts	6.00 Metres	Stainless Steel	
Y	6	STREET LIGHTING	CROXBY AVENUE	GRIMSBY	526785.36	405498.81	2006		47149	Urbis	Axia 16 LED 350mA	19 Watts	6.00 Metres	Stainless Steel	
Y	7	STREET LIGHTING	CROXBY AVENUE	GRIMSBY	526813.7	405486.04	2006		47150	Urbis	Axia 16 LED 350mA	19 Watts	6.00 Metres	Stainless Steel	
Y	8	STREET LIGHTING	CROXBY AVENUE	GRIMSBY	526829.48	405459.27	2006		47151	Urbis	Axia 16 LED 350mA	19 Watts	6.00 Metres	Stainless Steel	
Y	9	STREET LIGHTING	CROXBY AVENUE	GRIMSBY	526851.46	405439.43	2006		47152	Urbis	Axia 16 LED 350mA	19 Watts	6.00 Metres	Stainless Steel	
Y	1	STREET LIGHTING	CROXBY GROVE	GRIMSBY	526805.16	405504.49	1998		47153	Urbis	Axia 16 LED 350mA	19 Watts	6.00 Metres	Steel	
Y	2	STREET LIGHTING	CROXBY GROVE	GRIMSBY	526833.52	405524.24	1998		47154	Urbis	Axia 16 LED 350mA	19 Watts	6.00 Metres	Steel	
Y	3	STREET LIGHTING	CROXBY GROVE	GRIMSBY	526850.48	405542.97	1998		47155	Urbis	Axia 16 LED 350mA	19 Watts	6.00 Metres	Steel	
Y	1	STREET LIGHTING	FOOTPATH BETWEEN CROXBY	GRIMSBY	526726.56	405613.8	1966		48704	Urbis	Axia 8 LED 350mA	10 Watts	5.00 Metres	Galvanised Steel	
Y	1	STREET LIGHTING	DOVEDALE DRIVE	GRIMSBY	526497.88	405509.24	2017	30/06/2017	47538	Urbis	Axia 16 LED 350mA	19 Watts	6.00 Metres	Galvanised Steel	
Y	2	STREET LIGHTING	DOVEDALE DRIVE	GRIMSBY	526465.94	405500.88	2017	30/06/2017	47539	Urbis	Axia 16 LED 350mA	19 Watts	6.00 Metres	Galvanised Steel	
Y	3	STREET LIGHTING	DOVEDALE DRIVE	GRIMSBY	526419.68	405489.95	2017	30/06/2017	47540	Urbis	Axia 16 LED 350mA	19 Watts	6.00 Metres	Galvanised Steel	
Y	1	STREET LIGHTING	EASTBOURNE WAY	GRIMSBY	526854.78	405342.59	1997		47730	Urbis	Axia 16 LED 350mA	19 Watts	5.00 Metres	Galvanised Steel	
Y	2	STREET LIGHTING	EASTBOURNE WAY	GRIMSBY	526879.84	405344.8	1997		47731	Urbis	Axia 16 LED 350mA	19 Watts	5.00 Metres	Galvanised Steel	
Y	3	STREET LIGHTING	EASTBOURNE WAY	GRIMSBY	526901.87	405337.14	1997		47732	Urbis	Axia 16 LED 350mA	19 Watts	5.00 Metres	Galvanised Steel	
Y	4	STREET LIGHTING	EASTBOURNE WAY	GRIMSBY	526917.94	405319.61	1997		47733	Urbis	Axia 16 LED 350mA	19 Watts	5.00 Metres	Galvanised Steel	
Y	5	STREET LIGHTING	EASTBOURNE WAY	GRIMSBY	526935.03	405289.61	1997		47734	Urbis	Axia 16 LED 350mA	19 Watts	5.00 Metres	Galvanised Steel	
Y	6	STREET LIGHTING	EASTBOURNE WAY	GRIMSBY	526954.77	405268.54	1997		47735	Urbis	Axia 16 LED 350mA	19 Watts	5.00 Metres	Galvanised Steel	
Y	7	STREET LIGHTING	EASTBOURNE WAY	GRIMSBY	526967.43	405244.8	1997		47736	Urbis	Axia 16 LED 350mA	19 Watts	5.00 Metres	Galvanised Steel	
Y	8	STREET LIGHTING	EASTBOURNE WAY	GRIMSBY	526985.03	405248.22	1997		47737	Urbis	Axia 16 LED 350mA	19 Watts	5.00 Metres	Galvanised Steel	
Y	1	STREET LIGHTING	EDGE AVENUE	GRIMSBY	526537.21	406952.13	2008		47792	Urbis	Axia 16 LED 350mA	19 Watts	6.00 Metres	Steel	
Y	2	STREET LIGHTING	EDGE AVENUE	GRIMSBY	526570.69	406948.33	2006		47793	Urbis	Axia 16 LED 350mA	19 Watts	6.00 Metres	Stainless Steel	
Y	3	STREET LIGHTING	EDGE AVENUE	GRIMSBY	526599.78	406945.83	2006		47794	Urbis	Axia 16 LED 350mA	19 Watts	6.00 Metres	Stainless Steel	
Y	4	STREET LIGHTING	EDGE AVENUE	GRIMSBY	526634.58	406953.29	2008		47795	Urbis	Axia 16 LED 350mA	19 Watts	5.00 Metres	Steel	
Y	5	STREET LIGHTING	EDGE AVENUE	GRIMSBY	526669.19	406950.49	2008		47796	Urbis	Axia 16 LED 350mA	19 Watts	5.00 Metres	Steel	
Y	6	STREET LIGHTING	EDGE AVENUE	GRIMSBY	526702.1	406947.71	2008		47797	Urbis	Axia 16 LED 350mA	19 Watts	5.00 Metres	Steel	
Y	7	STREET LIGHTING	EDGE AVENUE	GRIMSBY	526733.99	406931.73	2008		47798	Urbis	Axia 16 LED 350mA	19 Watts	5.00 Metres	Steel	
Y	8	STREET LIGHTING	EDGE AVENUE	GRIMSBY	526764.18	406937.69	2008		47799	Urbis	Axia 16 LED 350mA	19 Watts	5.00 Metres	Steel	
Y	9	STREET LIGHTING	EDGE AVENUE	GRIMSBY	526798.5	406930.15	2008		47800	Urbis	Axia 16 LED 350mA	19 Watts	6.00 Metres	Steel	
Y	10	STREET LIGHTING	EDGE AVENUE	GRIMSBY	526824.68	406923.12	2007		68810	Urbis	Axia 16 LED 350mA	19 Watts	6.00 Metres	Steel	
Y	11	STREET LIGHTING	EDGE AVENUE	GRIMSBY	526842.93	406919.4	2007		47801	Urbis	Axia 16 LED 350mA	19 Watts	6.00 Metres	Steel	
Y	12	STREET LIGHTING	EDGE AVENUE	GRIMSBY	526851.69	406907.32	2007		47802	Urbis	Axia 16 LED 350mA	19 Watts	6.00 Metres	Steel	
Y	13	STREET LIGHTING	EDGE AVENUE	GRIMSBY	526837.48	406897.85	2007		47803	Urbis	Axia 16 LED 350mA	19 Watts	6.00 Metres	Steel	
Y	14	STREET LIGHTING	EDGE AVENUE	GRIMSBY	526825.02	406897.46	2007		47804	Urbis	Axia 16 LED 350mA	19 Watts	6.00 Metres	Steel	
Y	15	STREET LIGHTING	EDGE AVENUE	GRIMSBY	526826.13	406879.46	2007		47805	Urbis	Axia 16 LED 350mA	19 Watts	6.00 Metres	Steel	
Y	16	STREET LIGHTING	EDGE AVENUE	GRIMSBY	526823.04	406862.67	2007		47806	Urbis	Axia 16 LED 350mA	19 Watts	6.00 Metres	Steel	
Y	17	STREET LIGHTING	EDGE AVENUE	GRIMSBY	526789.21	406860.05	2007		47807	Urbis	Axia 16 LED 350mA	19 Watts	6.00 Metres	Steel	
Y	18	STREET LIGHTING	EDGE AVENUE	GRIMSBY	526776.29	406847.09	2007		47808	Urbis	Axia 16 LED 350mA	19 Watts	6.00 Metres	Steel	
Y	19	STREET LIGHTING	EDGE AVENUE	GRIMSBY	526799.79	406843.57	2007		47809	Urbis	Axia 16 LED 350mA	19 Watts	6.00 Metres	Steel	
Y	20	STREET LIGHTING	EDGE AVENUE	GRIMSBY	526834.54	406851.36	2007		47810	Urbis	Axia 16 LED 350mA	19 Watts	6.00 Metres	Steel	
Y	21	STREET LIGHTING	EDGE AVENUE	GRIMSBY	526858.21	406848.15	2007		47811	Urbis	Axia 16 LED 350mA	19 Watts	6.00 Metres	Steel	
Y	22	STREET LIGHTING	EDGE AVENUE	GRIMSBY	526820.38	406836.18	2007		47812	Urbis	Axia 16 LED 350mA	19 Watts	6.00 Metres	Steel	
Y	23	STREET LIGHTING	EDGE AVENUE	GRIMSBY	526807.56	406822.29	2007		47813	Urbis	Axia 16 LED 350mA	19 Watts	6.00 Metres	Steel	
Y	24	STREET LIGHTING	EDGE AVENUE	GRIMSBY	526841.25	406805.14	2007		68811	Urbis	Axia 16 LED 350mA	19 Watts	6.00 Metres	Steel	
Y	25	STREET LIGHTING	EDGE AVENUE	GRIMSBY	526812.52	406795.37	2007		47814	Urbis	Axia 16 LED 350mA	19 Watts	6.00 Metres	Steel	
Y	26	STREET LIGHTING	EDGE AVENUE	GRIMSBY	526808.27	406776.21	2007		47815	Urbis	Axia 16 LED 350mA	19 Watts	6.00 Metres	Steel	
Y	27	STREET LIGHTING	EDGE AVENUE	GRIMSBY	526803.48	406760.99	2007		47816	Urbis	Axia 16 LED 350mA	19 Watts	6.00 Metres	Steel	
Y	28	STREET LIGHTING	EDGE AVENUE	GRIMSBY	526784.76	406740.76	2007		47817	Urbis	Axia 16 LED 350mA	19 Watts	6.00 Metres	Steel	
Y	29	STREET LIGHTING	EDGE AVENUE	GRIMSBY	526769.15	406744.36	2007		47818	Urbis	Axia 16 LED 350mA	19 Watts	6.00 Metres	Steel	
Y	30	STREET LIGHTING	EDGE AVENUE	GRIMSBY	526754.37	406741.2	2007		47819	Urbis	Axia 16 LED 350mA	19 Watts	6.00 Metres	Steel	
Y	31	STREET LIGHTING	EDGE AVENUE	GRIMSBY	526798.19	406728.7	2007		47820	Urbis	Axia 16 LED 350mA	19 Watts	6.00 Metres	Steel	
Y	32	STREET LIGHTING	EDGE AVENUE	GRIMSBY	526813.54	406711.05	2007		47821	Urbis	Axia 16 LED 350mA	19 Watts	6.00 Metres	Steel	
Y	33	STREET LIGHTING	EDGE AVENUE	GRIMSBY	526775.44	406720.41	2007		47822	Urbis	Axia 16 LED 350mA	19 Watts	6.00 Metres	Steel	
Y	34	STREET LIGHTING	EDGE AVENUE	GRIMSBY	526767.38	406704.19	2007		47823	Urbis	Axia 16 LED 350mA	19 Watts	6.00 Metres	Steel	
Y	35	STREET LIGHTING	EDGE AVENUE	GRIMSBY	526765.55	406676.23	2007		47824	Urbis	Axia 16 LED 350mA	19 Watts	6.00 Metres	Steel	
Y	36	STREET LIGHTING	EDGE AVENUE	GRIMSBY	526748.16	406661.01	2007		47825	Urbis	Axia 16 LED 350mA	19 Watts	6.00 Metres	Steel	
Y	37	STREET LIGHTING	EDGE AVENUE	GRIMSBY	526746.96	406639.41	2007		47826	Urbis	Axia 16 LED 350mA	19 Watts	6.00 Metres	Steel	
Y	38	STREET LIGHTING	EDGE AVENUE	GRIMSBY	526733.39	406620.52	2007		47827	Urbis	Axia 16 LED 350mA	19 Watts	6.00 Metres	Steel	
Y	39	STREET LIGHTING	EDGE AVENUE	GRIMSBY	526745.9	406590.18	2007		47828	Urbis	Axia 16 LED 350mA	19 Watts	6.00 Metres	Steel	
Y	40	STREET LIGHTING	EDGE AVENUE	GRIMSBY	526722.48	406597.67	2007		47829	Urbis	Axia 16 LED 350mA	19 Watts	6.00 Metres	Steel	
Y	41	STREET LIGHTING	EDGE AVENUE	GRIMSBY	526712.01	406600.64	2007		47830	Urbis	Axia 16 LED 350mA	19 Watts	6.00 Metres	Steel	
Y	42	STREET LIGHTING	EDGE AVENUE	GRIMSBY	526692.36	406626.42	2007		47831	Urbis	Axia 16 LED 350mA	19 Watts	6.00 Metres	Steel	
Y	43	STREET LIGHTING	EDGE AVENUE	GRIMSBY	526673.01	406624.65	2007		47832	Urbis	Axia 16 LED 350mA	19 Watts	6.00 Metres	Steel	
Y	44	STREET LIGHTING	EDGE AVENUE	GRIMSBY	526678.84	406606.11	2007		47833	Urbis	Axia 16 LED 350mA	19 Watts	6.00 Metres	Steel	
Y	45	STREET LIGHTING	EDGE AVENUE	GRIMSBY	526686.97	406587.17	2007		47834	Urbis	Axia 16 LED 350mA	19 Watts	6.00 Metres	Steel	
Y	46	STREET LIGHTING	EDGE AVENUE	GRIMSBY	526682.27	406552.08	2007		47835	Urbis	Axia 16 LED 350mA	19 Watts	6.00 Metres	Steel	
Y	47	STREET LIGHTING	EDGE AVENUE	GRIMSBY	526670.2	406564.12	2007		47836	Urbis	Axia 16 LED 350mA	19 Watts	6.00 Metres	Steel	
Y	48	STREET LIGHTING	EDGE AVENUE	GRIMSBY	526658.05	406580.39	2007		47837	Urbis	Axia 16 LED 350mA	19 Watts	6.00 Metres	Steel	
Y	49	STREET LIGHTING	EDGE AVENUE	GRIMSBY	526635.65	406588.18	2007		47838	Urbis	Axia 16 LED 350mA	19 Watts	6.00 Metres	Steel	
Y	50	STREET LIGHTING	EDGE AVENUE	GRIMSBY	526624.74	406603.47	2007		47839	Urbis	Axia 16 LED 350mA	19 Watts	6.00 Metres	Steel	
Y	51	STREET LIGHTING	EDGE AVENUE	GRIMSBY	526609.19	406631.2	2007		47840	Urbis	Axia 16 LED 350mA	19 Watts	6.00 Metres	Steel	
Y	52	STREET LIGHTING	EDGE AVENUE	GRIMSBY	526591.36	406621.47	2007		47841	Urbis	Axia 16 LED 350mA	19 Watts	6.00 Metres	Steel	
Y	53	STREET LIGHTING	EDGE AVENUE	GRIMSBY	526597.21	406599.8	2007		47842	Urbis	Axia 16 LED 350mA	19 Watts	6.00 Metres	Steel	
Y	54	STREET LIGHTING	EDGE AVENUE	GRIMSBY	526595.16	406574.04	2007		47843	Urbis	Axia 16 LED 350mA	19 Watts	6.00 Metres	Steel	
Y	55	STREET LIGHTING	EDGE AVENUE	GRIMSBY	526585.88	406552.9	2007		47844	Urbis	Axia 16 LED 350mA	19 Watts	6.00 Metres	Steel	
Y	56	STREET LIGHTING	EDGE AVENUE	GRIMSBY	526602.07	406541.17	2007		47845	Urbis	Axia 16 LED 350mA	19 Watts	6.00 Metres	Steel	
Y	57	STREET LIGHTING	EDGE AVENUE	GRIMSBY	526622.05	406569.83	2007		47846	Urbis	Axia 16 LED 350mA	19 Watts	6.00 Metres	Steel	
Y	1	STREET LIGHTING	FERRIBY LANE	GRIMSBY	526448.69	406595.63	1999		48493	1 Urbis LED	Axia 16 LED 500mA	28 Watts	6.00 Metres	Aluminium	
Y	2	STREET LIGHTING	FERRIBY LANE	GRIMSBY	526416.84	406587.07	1999		48494	1 Urbis LED	Axia 16 LED 500mA	28 Watts	6.00 Metres	Aluminium	
Y	3	STREET LIGHTING	FERRIBY LANE	GRIMSBY	526387.56	406595.36	1999		48495	1 Urbis LED	Axia 16 LED 500mA	28 Watts	6.00 Metres	Aluminium	
Y	4	STREET LIGHTING	FERRIBY LANE	GRIMSBY	526360.68	406595.08	1999		48496	1 Urbis LED	Axia 16 LED 500mA	28 Watts	6.00 Metres	Aluminium	
Y	5	STREET LIGHTING	FERRIBY LANE	GRIMSBY	526330.12	406586.43	1999		48497	1 Urbis LED	Axia 16 LED 500mA	28 Watts	6.00 Metres	Aluminium	
Y	6	STREET LIGHTING	FERRIBY LANE	GRIMSBY	526303.24	406594.44	1999		48498	1 Urbis LED	Axia 16 LED 500mA	28 Watts	6.00 Metres	Aluminium	
Y	7	STREET LIGHTING	FERRIBY LANE	GRIMSBY	526271.94	406586.06	1999		48499	1 Urbis LED	Axia 16 LED 500mA	28 Watts	6.00 Metres	Aluminium	
Y	8	STREET LIGHTING	FERRIBY LANE	GRIMSBY	526245.79	406593.79	1999		48500	1 Urbis LED	Axia 16 LED 500mA	28 Watts	6.00 Metres	Aluminium	
Y	9	STREET LIGHTING	FERRIBY LANE	GRIMSBY	526223.7	406586.7	1999		48501	1 Urbis LED	Axia 16 LED 500mA	28 Watts	6.00 Metres	Aluminium	
Y	10	STREET LIGHTING	FERRIBY LANE	GRIMSBY	526195.56	406594.34	1999		48502	1 Urbis LED	Axia 16 LED 500mA	28 Watts	6.00 Metres	Aluminium	
Y	11	STREET LIGHTING	FERRIBY LANE	GRIMSBY	526171.84	406593.53	1999		48503	1 Urbis LED	Axia 16 LED 500mA	28 Watts	6.00 Metres	Galvanised Steel	
Y	12	STREET LIGHTING	FERRIBY LANE	GRIMSBY	526207.99	406604.76	1996		48504	1 Urbis LED	Axia 16 LED 500mA	28 Watts	5.00 Metres	Galvanised Steel	
Y	13	STREET LIGHTING	FERRIBY LANE	GRIMSBY	526192.3	406622.99	1996		48505	1 Urbis LED	Axia 16 LED 500mA	28 Watts	5.00 Metres	Galvanised Steel	
Y	14	STREET LIGHTING	FERRIBY LANE	GRIMSBY	526202.32	406643.16	1996		48506	1 Urbis LED	Axia 16 LED 500mA	28 Watts	5.00 Metres	Galvanised Steel	
Y	1	STREET LIGHTING	FERRIBY LANE BRIDLE PATH	GRIMSBY	526108.47	406576.08	2019	19/12/2019	67650	Urbis	Axia 8 LED 350mA	10 Watts	6.00 Metres	Galvanised Steel	
Y	1	STREET LIGHTING	GATE LANE	GRIMSBY	526487.51	406268.68	2011		49122	DW Windsor	Lancaster 15 LED	30 Watts	6.00 Metres	Steel	
Y	2	STREET LIGHTING	GATE LANE	GRIMSBY	526514.19	406271.85	2011		49123	DW Windsor	Lancaster 15 LED	30 Watts	6.00 Metres	Steel	
Y	1	STREET LIGHTING	GLEBE ROAD	GRIMSBY	527137.91	406332.17	2017	30/06/2017	49284	1 Urbis LED	Axia 16 LED 500mA	28 Watts	6.00 Metres	Galvanised Steel	
Y	2	STREET LIGHTING	GLEBE ROAD	GRIMSBY	527113.09	406262.96	2011		49285	1 Urbis LED	Axia 16 LED 500mA	28 Watts	6.00 Metres	Steel	
Y	3	STREET LIGHTING	GLEBE ROAD	GRIMSBY	527142.55	406227.46	2011		49286	1 Urbis LED	Axia 16 LED 500mA	28 Watts	6.00 Metres	Steel	
Y	4	STREET LIGHTING	GLEBE ROAD	GRIMSBY	527166.25	406199.46	2011		49287	1 Urbis LED	Axia 16 LED 500mA	28 Watts	6.00 Metres	Steel	
Y	5	STREET LIGHTING	GLEBE ROAD	GRIMSBY	527188.31	406166.76	2002		49288	1 Urbis LED	Axia 16 LED 500mA	28 Watts	6.00 Metres	Stainless Steel	
Y	1	STREET LIGHTING	GRANTHAM AVENUE	GRIMSBY	526838.58	406456.01	2017	30/06/2017	49491	Urbis	Axia 16 LED 350mA	19 Watts	6.00 Metres	Galvanised Steel	
Y	2	STREET LIGHTING	GRANTHAM AVENUE	GRIMSBY	526869.92	406434.59	1989		49490	Urbis	Axia 16 LED 350mA	19 Watts	5.00 Metres	Galvanised Steel	
Y	3	STREET LIGHTING	GRANTHAM AVENUE	GRIMSBY	526890.04	406422.46	2015		49489	Urbis	Axia 16 LED 350mA	19 Watts	6.00 Metres	Galvanised Steel	
Y	4	STREET LIGHTING	GRANTHAM AVENUE	GRIMSBY	526919.27	406416.02	2009		49488	Urbis	Axia 16 LED 350mA	19 Watts	6.00 Metres	Steel	
Y	5	STREET LIGHTING	GRANTHAM AVENUE	GRIMSBY	526931.58	406393.61	2009		49487	Urbis	Axia 16 LED 350mA	19 Watts	6.00 Metres	Steel	
Y	6	STREET LIGHTING	GRANTHAM AVENUE	GRIMSBY	526967.14	406384.32	1989		49486	Urbis	Axia 16 LED 350mA	19 Watts	6.00 Metres	Galvanised Steel	

Y	7	STREET LIGHTING	GRANTHAM AVENUE	GRIMSBY	526993.52	406360.71	2017	30/06/2017	49485	Urbis	Axia 16 LED 350mA	19 Watts	6.00 Metres	Galvanised Steel	
Y	8	STREET LIGHTING	GRANTHAM AVENUE	GRIMSBY	527017.04	406331.02	1989		49484	Urbis	Axia 16 LED 350mA	19 Watts	6.00 Metres	Galvanised Steel	
Y	9	STREET LIGHTING	GRANTHAM AVENUE	GRIMSBY	527051.69	406316.51	2004		49483	Urbis	Axia 16 LED 350mA	19 Watts	6.00 Metres	Stainless Steel	
Y	10	STREET LIGHTING	GRANTHAM AVENUE	GRIMSBY	527086.98	406312.55	2017	30/06/2017	66898	Urbis	Axia 16 LED 350mA	19 Watts	6.00 Metres	Galvanised Steel	
Y	11	STREET LIGHTING	GRANTHAM AVENUE	GRIMSBY	527122.82	406336.26	2004		49481	Urbis	Axia 16 LED 350mA	19 Watts	6.00 Metres	Stainless Steel	
Y	12	STREET LIGHTING	GRANTHAM AVENUE	GRIMSBY	527161.14	406348.85	2010		49480	Urbis	Axia 16 LED 350mA	19 Watts	6.00 Metres	Steel	
Y	13	STREET LIGHTING	GRANTHAM AVENUE	GRIMSBY	527181.27	406375.13	2017		49479	Urbis	Axia 16 LED 350mA	19 Watts	6.00 Metres	Galvanised Steel	
Y	1	STREET LIGHTING	HILARY ROAD	GRIMSBY	526704.72	405372.21	2016		66938	1 Urbis LED	Axia 16 LED 500mA	28 Watts	6.00 Metres	Galvanised Steel	
Y	2	STREET LIGHTING	HILARY ROAD	GRIMSBY	526696.49	405397.16	2016		66939	1 Urbis LED	Axia 16 LED 500mA	28 Watts	6.00 Metres	Galvanised Steel	
Y	3	STREET LIGHTING	HILARY ROAD	GRIMSBY	526681.77	405434.16	1989		50802	1 Urbis LED	Axia 16 LED 500mA	28 Watts	6.00 Metres	Steel	
Y	4	STREET LIGHTING	HILARY ROAD	GRIMSBY	526667.04	405464.64	1989		50803	1 Urbis LED	Axia 16 LED 500mA	28 Watts	5.00 Metres	Galvanised Steel	
Y	1	STREET LIGHTING	KENSINGTON PLACE	GRIMSBY	526964.73	405917.12	2016	30/06/2016	51546	Urbis	Axia 16 LED 350mA	19 Watts	6.00 Metres	Galvanised Steel	
Y	2	STREET LIGHTING	KENSINGTON PLACE	GRIMSBY	526990.66	405888.87	2003		51547	Urbis	Axia 16 LED 350mA	19 Watts	6.00 Metres	Stainless Steel	
Y	3	STREET LIGHTING	KENSINGTON PLACE	GRIMSBY	527006.62	405906.04	2016	30/06/2016	51548	Urbis	Axia 16 LED 350mA	19 Watts	6.00 Metres	Galvanised Steel	
Y	4	STREET LIGHTING	KENSINGTON PLACE	GRIMSBY	527030.3	405876.68	2016	30/06/2016	51549	Urbis	Axia 16 LED 350mA	19 Watts	6.00 Metres	Galvanised Steel	
Y	5	STREET LIGHTING	KENSINGTON PLACE	GRIMSBY	527060.8	405852.82	2016	30/06/2016	51550	Urbis	Axia 16 LED 350mA	19 Watts	6.00 Metres	Galvanised Steel	
Y	6	STREET LIGHTING	KENSINGTON PLACE	GRIMSBY	527084.98	405829.84	2016	30/06/2016	51551	Urbis	Axia 16 LED 350mA	19 Watts	6.00 Metres	Galvanised Steel	
Y	7	STREET LIGHTING	KENSINGTON PLACE	GRIMSBY	527107.13	405807.19	2016	30/06/2016	51552	Urbis	Axia 16 LED 350mA	19 Watts	6.00 Metres	Galvanised Steel	
Y	8	STREET LIGHTING	KENSINGTON PLACE	GRIMSBY	527129.79	405774.53	2016	30/06/2016	51553	Urbis	Axia 16 LED 350mA	19 Watts	6.00 Metres	Galvanised Steel	
Y	9	STREET LIGHTING	KENSINGTON PLACE	GRIMSBY	527104.22	405748.27	2016	30/06/2016	51554	Urbis	Axia 16 LED 350mA	19 Watts	6.00 Metres	Galvanised Steel	
Y	10	STREET LIGHTING	KENSINGTON PLACE	GRIMSBY	527076.75	405727.95	2016	30/06/2016	51555	Urbis	Axia 16 LED 350mA	19 Watts	6.00 Metres	Galvanised Steel	
Y	1	STREET LIGHTING	LINWOOD AVENUE	GRIMSBY	526563.23	405580.94	2006		52613	Urbis	Axia 16 LED 350mA	19 Watts	6.00 Metres	Stainless Steel	
Y	2	STREET LIGHTING	LINWOOD AVENUE	GRIMSBY	526589.38	405598.96	2006		52614	Urbis	Axia 16 LED 350mA	19 Watts	6.00 Metres	Stainless Steel	
Y	3	STREET LIGHTING	LINWOOD AVENUE	GRIMSBY	526623.86	405601.04	2006		52615	Urbis	Axia 16 LED 350mA	19 Watts	6.00 Metres	Stainless Steel	
Y	4	STREET LIGHTING	LINWOOD AVENUE	GRIMSBY	526651.46	405619.27	2006		52616	Urbis	Axia 16 LED 350mA	19 Watts	6.00 Metres	Stainless Steel	
Y	5	STREET LIGHTING	LINWOOD AVENUE	GRIMSBY	526673.03	405624.9	2006		52617	Urbis	Axia 16 LED 350mA	19 Watts	6.00 Metres	Stainless Steel	
Y	1	STREET LIGHTING	LISBURN GROVE	GRIMSBY	526730.41	406965.37	2016	22/06/2016	52618	Urbis	Axia 16 LED 500mA	28 Watts	6.00 Metres	Galvanised Steel	
Y	2	STREET LIGHTING	LISBURN GROVE	GRIMSBY	526733.91	406996.21	2016	22/06/2016	52619	Urbis	Axia 16 LED 500mA	28 Watts	6.00 Metres	Galvanised Steel	
Y	3	STREET LIGHTING	LISBURN GROVE	GRIMSBY	526779.33	406986.25	2016	31/01/2016	52620	1 Urbis LED	Axia 16 LED 500mA	28 Watts	6.00 Metres	Stainless Steel	
Y	4	STREET LIGHTING	LISBURN GROVE	GRIMSBY	526808.47	406989.76	2016	22/06/2016	52621	Urbis	Axia 16 LED 500mA	28 Watts	6.00 Metres	Galvanised Steel	
Y	5	STREET LIGHTING	LISBURN GROVE	GRIMSBY	526853.58	406981.57	2016	22/06/2016	52622	Urbis	Teceo 24 LED 500mA	40 Watts	6.00 Metres	Galvanised Steel	
Y	1	STREET LIGHTING	FOOTPATH BETWEEN LISBURN	GRIMSBY	526729	407017	2002		48761	Urbis	Axia 8 LED 350mA	10 Watts	6.00 Metres	Galvanised Steel	
Y	2	STREET LIGHTING	FOOTPATH BETWEEN LISBURN	GRIMSBY	526716.25	407031.22	2002		48762	Urbis	Axia 8 LED 350mA	10 Watts	6.00 Metres	Galvanised Steel	
Y	1	STREET LIGHTING	LOUTH ROAD	GRIMSBY	526519.62	406316.19	1997		52800	1 Urbis LED	Teceo 48 LED 700mA	104 Watts	10.00 Metres	Galvanised Steel	
Y	2	STREET LIGHTING	LOUTH ROAD	GRIMSBY	526540.38	406309.87	1997		52801	1 Urbis LED	Teceo 48 LED 700mA	104 Watts	10.00 Metres	Galvanised Steel	
Y	3	STREET LIGHTING	LOUTH ROAD	GRIMSBY	526560.89	406287.65	1997		52802	1 Urbis LED	Teceo 48 LED 700mA	104 Watts	10.00 Metres	Galvanised Steel	
Y	4	STREET LIGHTING	LOUTH ROAD	GRIMSBY	526570.51	406254.74	1997		52803	1 Urbis LED	Teceo 48 LED 700mA	104 Watts	10.00 Metres	Galvanised Steel	
Y	5	STREET LIGHTING	LOUTH ROAD	GRIMSBY	526593.85	406224.58	1997		52804	1 Urbis LED	Teceo 48 LED 700mA	104 Watts	10.00 Metres	Galvanised Steel	
Y	6	STREET LIGHTING	LOUTH ROAD	GRIMSBY	526611.16	406218.78	1997		52805	1 Urbis LED	Teceo 48 LED 700mA	104 Watts	10.00 Metres	Galvanised Steel	
Y	7	STREET LIGHTING	LOUTH ROAD	GRIMSBY	526627.36	406193.28	1997		52806	1 Urbis LED	Teceo 48 LED 700mA	104 Watts	10.00 Metres	Galvanised Steel	
Y	8	STREET LIGHTING	LOUTH ROAD	GRIMSBY	526642.83	406170.17	1997		52807	1 Urbis LED	Teceo 48 LED 700mA	104 Watts	10.00 Metres	Galvanised Steel	
Y	9	STREET LIGHTING	LOUTH ROAD	GRIMSBY	526647.25	406134.73	1994		52808	1 Urbis LED	Teceo 48 LED 700mA	104 Watts	10.00 Metres	Galvanised Steel	
Y	10	STREET LIGHTING	LOUTH ROAD	GRIMSBY	526676.47	406111.7	2003		52809	1 Urbis LED	Teceo 48 LED 700mA	104 Watts	10.00 Metres	Stainless Steel	
Y	11	STREET LIGHTING	LOUTH ROAD	GRIMSBY	526696.46	406075.54	2003		52810	1 Urbis LED	Teceo 48 LED 700mA	104 Watts	8.00 Metres	Stainless Steel	
Y	12	STREET LIGHTING	LOUTH ROAD	GRIMSBY	526712.24	406045.8	2003		52811	1 Urbis LED	Teceo 48 LED 700mA	104 Watts	8.00 Metres	Stainless Steel	
Y	13	STREET LIGHTING	LOUTH ROAD	GRIMSBY	526714.63	406015.12	2003		52812	1 Urbis LED	Teceo 48 LED 700mA	104 Watts	8.00 Metres	Stainless Steel	
Y	14	STREET LIGHTING	LOUTH ROAD	GRIMSBY	526747.02	405984.4	2003		52813	1 Urbis LED	Teceo 48 LED 700mA	104 Watts	8.00 Metres	Stainless Steel	
Y	15	STREET LIGHTING	LOUTH ROAD	GRIMSBY	526748.45	405954.48	2003		52814	1 Urbis LED	Teceo 48 LED 700mA	104 Watts	8.00 Metres	Stainless Steel	
Y	16	STREET LIGHTING	LOUTH ROAD	GRIMSBY	526774.89	405935.86	2003		52815	1 Urbis LED	Teceo 48 LED 700mA	104 Watts	8.00 Metres	Stainless Steel	
Y	17	STREET LIGHTING	LOUTH ROAD	GRIMSBY	526793.68	405906.93	2003		52816	1 Urbis LED	Teceo 48 LED 700mA	104 Watts	8.00 Metres	Stainless Steel	
Y	18	STREET LIGHTING	LOUTH ROAD	GRIMSBY	526815.73	405878.19	2003		52817	1 Urbis LED	Teceo 48 LED 700mA	104 Watts	8.00 Metres	Stainless Steel	
Y	19	STREET LIGHTING	LOUTH ROAD	GRIMSBY	526824.88	405839.24	2003		52818	1 Urbis LED	Teceo 48 LED 700mA	104 Watts	8.00 Metres	Stainless Steel	
Y	20	STREET LIGHTING	LOUTH ROAD	GRIMSBY	526844.55	405806.39	2003		52819	1 Urbis LED	Teceo 48 LED 700mA	104 Watts	8.00 Metres	Stainless Steel	
Y	21	STREET LIGHTING	LOUTH ROAD	GRIMSBY	526856.89	405784.44	2003		52820	1 Urbis LED	Teceo 48 LED 700mA	104 Watts	8.00 Metres	Stainless Steel	
Y	22	STREET LIGHTING	LOUTH ROAD	GRIMSBY	526889.64	405755.62	2003		52821	1 Urbis LED	Teceo 48 LED 700mA	104 Watts	10.00 Metres	Stainless Steel	
Y	23	STREET LIGHTING	LOUTH ROAD	GRIMSBY	526910.32	405721.27	2003		52822	1 Urbis LED	Teceo 48 LED 700mA	104 Watts	10.00 Metres	Stainless Steel	
Y	24	STREET LIGHTING	LOUTH ROAD	GRIMSBY	526912.31	405692.43	2003		52823	1 Urbis LED	Teceo 48 LED 700mA	104 Watts	10.00 Metres	Stainless Steel	
Y	25	STREET LIGHTING	LOUTH ROAD	GRIMSBY	526928.11	405665.84	2003		52824	1 Urbis LED	Teceo 48 LED 700mA	104 Watts	8.00 Metres	Stainless Steel	
Y	26	STREET LIGHTING	LOUTH ROAD	GRIMSBY	526951.62	405635.24	2003		52825	1 Urbis LED	Teceo 48 LED 700mA	104 Watts	10.00 Metres	Stainless Steel	
Y	27	STREET LIGHTING	LOUTH ROAD	GRIMSBY	526985.38	405610.46	2003		52826	1 Urbis LED	Teceo 48 LED 700mA	104 Watts	10.00 Metres	Stainless Steel	
Y	28	STREET LIGHTING	LOUTH ROAD	GRIMSBY	527005.39	405581.38	2003		52827	1 Urbis LED	Teceo 48 LED 700mA	104 Watts	10.00 Metres	Stainless Steel	
Y	29	STREET LIGHTING	LOUTH ROAD	GRIMSBY	527015.39	405545.68	2003		52828	1 Urbis LED	Teceo 48 LED 700mA	104 Watts	10.00 Metres	Galvanised Steel	
Y	30	STREET LIGHTING	LOUTH ROAD	GRIMSBY	527046.34	405525.7	2003		52829	1 Urbis LED	Teceo 48 LED 700mA	104 Watts	10.00 Metres	Galvanised Steel	
Y	31	STREET LIGHTING	LOUTH ROAD	GRIMSBY	527054.79	405489.34	2003		52830	1 Urbis LED	Teceo 48 LED 700mA	104 Watts	10.00 Metres	Galvanised Steel	
Y	32	STREET LIGHTING	LOUTH ROAD	GRIMSBY	527088.38	405467.92	2003		52831	1 Urbis LED	Teceo 48 LED 700mA	104 Watts	10.00 Metres	Galvanised Steel	
Y	33	STREET LIGHTING	LOUTH ROAD	GRIMSBY	527095.84	405432.97	2003		52832	1 Urbis LED	Teceo 48 LED 700mA	104 Watts	10.00 Metres	Galvanised Steel	
Y	34	STREET LIGHTING	LOUTH ROAD	GRIMSBY	527127.82	405409.89	2003		52833	1 Urbis LED	Teceo 48 LED 700mA	104 Watts	10.00 Metres	Galvanised Steel	
Y	35	STREET LIGHTING	LOUTH ROAD	GRIMSBY	527137.27	405375.98	2003		52834	1 Urbis LED	Teceo 48 LED 700mA	104 Watts	10.00 Metres	Galvanised Steel	
Y	36	STREET LIGHTING	LOUTH ROAD	GRIMSBY	527168.91	405353.41	2003		52835	1 Urbis LED	Teceo 48 LED 700mA	104 Watts	10.00 Metres	Galvanised Steel	
Y	37	STREET LIGHTING	LOUTH ROAD	GRIMSBY	527178.97	405318.12	2003		52836	1 Urbis LED	Teceo 48 LED 700mA	104 Watts	10.00 Metres	Galvanised Steel	
Y	38	STREET LIGHTING	LOUTH ROAD	GRIMSBY	527211.41	405296.86	2003		52837	1 Urbis LED	Teceo 48 LED 700mA	104 Watts	10.00 Metres	Galvanised Steel	
Y	39	STREET LIGHTING	LOUTH ROAD	GRIMSBY			2024	19/11/2024	70024	Urbis	Teceo 48 LED 700mA	104 Watts	12.00 Metres	Galvanised Steel	
Y	40	STREET LIGHTING	LOUTH ROAD	GRIMSBY	527255.74	405232.42	2003		52839	1 Urbis LED	Teceo 48 LED 700mA	104 Watts	10.00 Metres	Stainless Steel	
Y	1	STREET LIGHTING	LYNDHURST AVENUE	GRIMSBY	526630.67	407168.35	1992		53011	Urbis	Axia 16 LED 350mA	19 Watts	6.00 Metres	Galvanised Steel	
Y	2	STREET LIGHTING	LYNDHURST AVENUE	GRIMSBY	526629.91	407191.07	1992		53012	Urbis	Axia 16 LED 350mA	19 Watts	6.00 Metres	Galvanised Steel	
Y	3	STREET LIGHTING	LYNDHURST AVENUE	GRIMSBY	526636.49	407145.95	1992		53013	Urbis	Axia 16 LED 350mA	19 Watts	6.00 Metres	Galvanised Steel	
Y	4	STREET LIGHTING	LYNDHURST AVENUE	GRIMSBY	526629.97	407122.62	2021	01/11/2021	68740	Urbis	Axia 16 LED 350mA	19 Watts	6.00 Metres	Galvanised Steel	
Y	1	STREET LIGHTING	MELBOURNE AVENUE	GRIMSBY	526696.05	407191.75	1992		53510	Urbis	Axia 16 LED 350mA	19 Watts	6.00 Metres	Galvanised Steel	
Y	2	STREET LIGHTING	MELBOURNE AVENUE	GRIMSBY	526697.16	407157.04	1992		53511	Urbis	Axia 16 LED 350mA	19 Watts	6.00 Metres	Galvanised Steel	
Y	3	STREET LIGHTING	MELBOURNE AVENUE	GRIMSBY	526698.45	407122.34	1992		53512	Urbis	Axia 16 LED 350mA	19 Watts	6.00 Metres	Galvanised Steel	
Y	1	STREET LIGHTING	MILLFIELD AVENUE	GRIMSBY	526568.28	407163.58	1996		53677	Urbis	Axia 16 LED 350mA	19 Watts	5.00 Metres	Galvanised Steel	
Y	2	STREET LIGHTING	MILLFIELD AVENUE	GRIMSBY	526594.05	407157.32	1996		53678	Urbis	Axia 16 LED 350mA	19 Watts	5.00 Metres	Galvanised Steel	
Y	3	STREET LIGHTING	MILLFIELD AVENUE	GRIMSBY	526623.69	407157.59	1996		53679	Urbis	Axia 16 LED 350mA	19 Watts	5.00 Metres	Galvanised Steel	
Y	4	STREET LIGHTING	MILLFIELD AVENUE	GRIMSBY	526649.29	407165.33	1996		53680	Urbis	Axia 16 LED 350mA	19 Watts	5.00 Metres	Galvanised Steel	
Y	5	STREET LIGHTING	MILLFIELD AVENUE	GRIMSBY	526681.14	407159.16	1996		53681	Urbis	Axia 16 LED 350mA	19 Watts	5.00 Metres	Galvanised Steel	
Y	1	STREET LIGHTING	NEWMARCH CRESCENT	GRIMSBY	526530.59	406136.03	2012		54139	Urbis	Axia 16 LED 350mA	19 Watts	6.00 Metres	Galvanised Steel	
Y	2	STREET LIGHTING	NEWMARCH CRESCENT	GRIMSBY	526534.24	406100.21	2012		54140	Urbis	Axia 16 LED 350mA	19 Watts	6.00 Metres	Galvanised Steel	
Y	1	STREET LIGHTING	ORCHARDS CROFT	GRIMSBY	526550.61	405317.48	2020	30/06/2020	67891	Urbis	Axia 16 LED 350mA	19 Watts	6.00 Metres	Galvanised Steel	
Y	2	STREET LIGHTING	ORCHARDS CROFT	GRIMSBY	526519.42	405325.89	2020	30/06/2020	68185	Urbis	Axia 16 LED 350mA	19 Watts	6.00 Metres	Galvanised Steel	
Y	3	STREET LIGHTING	ORCHARDS CROFT	GRIMSBY	526486.7	405321.76	2020	30/06/2020	68186	Urbis	Axia 16 LED 350mA	19 Watts	6.00 Metres	Galvanised Steel	
Y	4	STREET LIGHTING	ORCHARDS CROFT	GRIMSBY	526473.3	405298.91	2016	13/05/2016	54425	Urbis	Teceo 24 LED 500mA	40 Watts	6.00 Metres	Galvanised Steel	
Y	1	STREET LIGHTING	THE OVAL	GRIMSBY	526113.76	406410.83	2017	28/02/2017	59020	Urbis	Axia 16 LED 350mA	19 Watts	6.00 Metres	Galvanised Steel	
Y	2	STREET LIGHTING	THE OVAL	GRIMSBY	526132.75	406388.74	2017	28/02/2017	59021	Urbis	Axia 16 LED 350mA	19 Watts	6.00 Metres	Galvanised Steel	
Y	3	STREET LIGHTING	THE OVAL	GRIMSBY	526158.32	406386.65	2017	28/02/2017	59022	Urbis	Axia 16 LED 350mA	19 Watts	6.00 Metres	Galvanised Steel	
Y	4	STREET LIGHTING	THE OVAL	GRIMSBY	526198.19	406379.88	2010		59023	Urbis	Axia 16 LED 350mA	19 Watts	6.00 Metres	Galvanised Steel	
Y	5	STREET LIGHTING	THE OVAL	GRIMSBY	526243.12	406372.22	2017	28/02/2017	59024	Urbis	Axia 16 LED 350mA	19 Watts	6.00 Metres	Galvanised Steel	
Y	6	STREET LIGHTING	THE OVAL	GRIMSBY	526279.45	406361.27	2017	28/02/2017	59025	Urbis	Axia 16 LED 350mA	19 Watts	6.00 Metres	Galvanised Steel	
Y	7	STREET LIGHTING	THE OVAL	GRIMSBY	526291.48	406329.06	2017	28/02/2017	59026	Urbis	Axia 16 LED 350mA	19 Watts	6.00 Metres	Galvanised Steel	
Y	8	STREET LIGHTING	THE OVAL	GRIMSBY	526268.41	406309.59	2017	28/02/2017	59027	Urbis	Axia 16 LED 350mA	19 Watts	6.00 Metres	Galvanised Steel	
Y	9	STREET LIGHTING	THE OVAL	GRIMSBY	526278.03	406285.35	2017	28/02/2017	59028	Urbis	Axia 16 LED 350mA	19 Watts	6.00 Metres	Galvanised Steel	
Y	10	STREET LIGHTING	THE OVAL	GRIMSBY	526232.08	406312.19	2017	28/02/2017	59029	Urbis	Axia 16 LED 350mA	19 Watts	6.00 Metres	Galvanised Steel	
Y	11	STREET LIGHTING	THE OVAL	GRIMSBY	526185.28	406320.25	2017	28/02/2017	59030	Urbis	Axia 16 LED 350mA	19 Watts	6.00 Metres	Galvanised Steel	
Y	12	STREET LIGHTING	THE OVAL	GRIMSBY	526153.63	406329.56	2017	28/02/2017	59031	Urbis	Axia 16 LED 350mA	19 Watts	6.00 Metres	Galvanised Steel	
Y	13	STREET LIGHTING	THE OVAL	GRIMSBY	526148.95	406357.6	2017	28/02/2017	59032	Urbis	Axia 16 LED 350mA	19 Watts	6.00 Metres	Galvanised Steel	
Y	1	STREET LIGHTING	PAGEHALL CLOSE	GRIMSBY	526813.95	406472.81	2016	30/06/2016	54575	Urbis	Axia 16 LED 350mA	19 Watts	6.00 Metres	Galvanised Steel	
Y	2	STREET LIGHTING	PAGEHALL CLOSE	GRIMSBY	526776.03	406493.52	2016	30/06/2016	54576	Urbis	Axia 16 LED 350mA	19 Watts	6.00 Metres	Galvanised Steel	
Y	3	STREET LIGHTING	PAGEHALL CLOSE	GRIMSBY	526777.31	406522.24	2016	30/06/2016	54577	Urbis	Axia 16 LED 350mA	19 Watts	6.00 Metres	Galvanised Steel	
Y	4	STREET LIGHTING	PAGEHALL CLOSE	GRIMSBY	526787.62	406550.41	2016	30/06/2016	54578	Urbis	Axia 16 LED 350mA	19 Watts	6.00 Metres	Galvanised Steel	
Y	5	STREET LIGHTING	PAGEHALL CLOSE	GRIMSBY	526822.79	406540.01	2016	30/06/2016	54579	Urbis	Axia 16 LED 350mA	19 Watts	6.00 Metres	Galvanised Steel	
Y	6	STREET LIGHTING	PAGEHALL CLOSE	GRIMSBY	526850.78	406518.29	2016	30/06/2016	54580	Urbis	Axia 16 LED 350mA	19 Watts	6.00 Metres	Galvanised Steel	

Y	7	STREET LIGHTING	PAGEHALL CLOSE	GRIMSBY	526833.84	406491.68	2016	30/06/2016	54581	Urbis	Axia 16 LED 350mA	19 Watts	6.00 Metres	Galvanised Steel	
Y	1	STREET LIGHTING	PELHAM AVENUE	GRIMSBY	526458.13	406422.57	1937		55112	1 Urbis LED	Teceo 24 LED 500mA	40 Watts	6.00 Metres	Steel	
Y	2	STREET LIGHTING	PELHAM AVENUE	GRIMSBY	526428.48	406429.94	2016	30/09/2016	55113	1 Urbis LED	Teceo 24 LED 500mA	40 Watts	6.00 Metres	Galvanised Steel	
Y	3	STREET LIGHTING	PELHAM AVENUE	GRIMSBY	526394.98	406430.58	2016	30/09/2016	55114	1 Urbis LED	Teceo 24 LED 500mA	40 Watts	6.00 Metres	Galvanised Steel	
Y	4	STREET LIGHTING	PELHAM AVENUE	GRIMSBY	526350.79	406436.29	2016	30/09/2016	55115	1 Urbis LED	Teceo 24 LED 500mA	40 Watts	6.00 Metres	Galvanised Steel	
Y	5	STREET LIGHTING	PELHAM AVENUE	GRIMSBY	526314.86	406445.41	1937		55116	1 Urbis LED	Teceo 24 LED 500mA	40 Watts	6.00 Metres	Steel	
Y	6	STREET LIGHTING	PELHAM AVENUE	GRIMSBY	526279	406455	2002		55117	1 Urbis LED	Teceo 24 LED 500mA	40 Watts	6.00 Metres	Stainless Steel	
Y	7	STREET LIGHTING	PELHAM AVENUE	GRIMSBY	526249	406451	2002		55118	1 Urbis LED	Teceo 24 LED 500mA	40 Watts	6.00 Metres	Stainless Steel	
Y	8	STREET LIGHTING	PELHAM AVENUE	GRIMSBY	526224.67	406468.24	1937		55119	1 Urbis LED	Teceo 24 LED 500mA	40 Watts	5.00 Metres	Steel	
Y	9	STREET LIGHTING	PELHAM AVENUE	GRIMSBY	526181.58	406488.86	2016	30/09/2016	55120	1 Urbis LED	Teceo 24 LED 500mA	40 Watts	6.00 Metres	Galvanised Steel	
Y	10	STREET LIGHTING	PELHAM AVENUE	GRIMSBY	526170.43	406509.51	2002		61892	1 Urbis LED	Teceo 24 LED 500mA	40 Watts	6.00 Metres	Stainless Steel	
Y	10	STREET LIGHTING	PELHAM AVENUE	GRIMSBY	526170.43	406509.51	2002		62426	1 Urbis LED	Teceo 24 LED 500mA	40 Watts	6.00 Metres	Stainless Steel	
Y	11	STREET LIGHTING	PELHAM AVENUE	GRIMSBY	526139.05	406492.27	2016	30/09/2016	55121	1 Urbis LED	Teceo 24 LED 500mA	40 Watts	6.00 Metres	Galvanised Steel	
Y	12	STREET LIGHTING	PELHAM AVENUE	GRIMSBY	526122	406468	2002		55122	1 Urbis LED	Teceo 24 LED 500mA	40 Watts	5.00 Metres	Stainless Steel	
Y	13	STREET LIGHTING	PELHAM AVENUE	GRIMSBY	526100	406448	2002		55123	1 Urbis LED	Teceo 24 LED 500mA	40 Watts	5.00 Metres	Stainless Steel	
Y	14	STREET LIGHTING	PELHAM AVENUE	GRIMSBY	526090.26	406413.56	2016	30/09/2016	55124	1 Urbis LED	Teceo 24 LED 500mA	40 Watts	6.00 Metres	Galvanised Steel	
Y	15	STREET LIGHTING	PELHAM AVENUE	GRIMSBY	526088	406379	2002		55125	1 Urbis LED	Teceo 24 LED 500mA	40 Watts	6.00 Metres	Stainless Steel	
Y	16	STREET LIGHTING	PELHAM AVENUE	GRIMSBY	526067.24	406348.75	2016	30/09/2016	55126	1 Urbis LED	Teceo 24 LED 500mA	40 Watts	6.00 Metres	Galvanised Steel	
Y	17	STREET LIGHTING	PELHAM AVENUE	GRIMSBY	526056.57	406318.47	2016	30/09/2016	55127	1 Urbis LED	Teceo 24 LED 500mA	40 Watts	6.00 Metres	Galvanised Steel	
Y	18	STREET LIGHTING	PELHAM AVENUE	GRIMSBY	526048.1	406283.76	2016	30/09/2016	55128	1 Urbis LED	Teceo 24 LED 500mA	40 Watts	6.00 Metres	Galvanised Steel	
Y	19	STREET LIGHTING	PELHAM AVENUE	GRIMSBY	526046.02	406244.85	2016	30/09/2016	55129	1 Urbis LED	Teceo 24 LED 500mA	40 Watts	6.00 Metres	Galvanised Steel	
Y	20	STREET LIGHTING	PELHAM AVENUE	GRIMSBY	526047.5	406216.78	1986		55130	1 Urbis LED	Teceo 24 LED 500mA	40 Watts	6.00 Metres	Galvanised Steel	
Y	21	STREET LIGHTING	PELHAM AVENUE	GRIMSBY	526058.73	406189.25	2016	30/09/2016	55131	1 Urbis LED	Teceo 24 LED 500mA	40 Watts	6.00 Metres	Galvanised Steel	
Y	22	STREET LIGHTING	PELHAM AVENUE	GRIMSBY	526091.68	406173.33	2016	30/09/2016	55132	1 Urbis LED	Teceo 24 LED 500mA	40 Watts	6.00 Metres	Galvanised Steel	
Y	23	STREET LIGHTING	PELHAM AVENUE	GRIMSBY	526125.38	406183.73	2016	30/09/2016	55133	1 Urbis LED	Teceo 24 LED 500mA	40 Watts	6.00 Metres	Galvanised Steel	
Y	24	STREET LIGHTING	PELHAM AVENUE	GRIMSBY	526148.95	406204.35	2016	30/09/2016	55134	1 Urbis LED	Teceo 24 LED 500mA	40 Watts	6.00 Metres	Galvanised Steel	
Y	25	STREET LIGHTING	PELHAM AVENUE	GRIMSBY	526179.88	406213.46	2016	30/09/2016	55135	1 Urbis LED	Teceo 24 LED 500mA	40 Watts	6.00 Metres	Galvanised Steel	
Y	26	STREET LIGHTING	PELHAM AVENUE	GRIMSBY	526209.89	406235.1	2016	30/09/2016	55136	1 Urbis LED	Teceo 24 LED 500mA	40 Watts	6.00 Metres	Galvanised Steel	
Y	27	STREET LIGHTING	PELHAM AVENUE	GRIMSBY	526249.84	406246.24	2016	30/09/2016	55137	1 Urbis LED	Teceo 24 LED 500mA	40 Watts	6.00 Metres	Galvanised Steel	
Y	28	STREET LIGHTING	PELHAM AVENUE	GRIMSBY	526287.22	406260.51	2016	30/09/2016	55138	1 Urbis LED	Teceo 24 LED 500mA	40 Watts	6.00 Metres	Galvanised Steel	
Y	29	STREET LIGHTING	PELHAM AVENUE	GRIMSBY	526331.4	406276.8	2016	30/09/2016	55139	1 Urbis LED	Teceo 24 LED 500mA	40 Watts	6.00 Metres	Galvanised Steel	
Y	30	STREET LIGHTING	PELHAM AVENUE	GRIMSBY	526356.63	406306.91	2016	30/09/2016	55140	1 Urbis LED	Teceo 24 LED 500mA	40 Watts	6.00 Metres	Galvanised Steel	
Y	31	STREET LIGHTING	PELHAM AVENUE	GRIMSBY	526348.89	406337.56	2016	30/09/2016	55141	1 Urbis LED	Teceo 24 LED 500mA	40 Watts	6.00 Metres	Galvanised Steel	
Y	32	STREET LIGHTING	PELHAM AVENUE	GRIMSBY	526348.89	406376.04	2016	30/09/2016	55142	1 Urbis LED	Teceo 24 LED 500mA	40 Watts	6.00 Metres	Galvanised Steel	
Y	33	STREET LIGHTING	PELHAM AVENUE	GRIMSBY	526359.02	406413.88	2016	30/09/2016	55143	1 Urbis LED	Teceo 24 LED 500mA	40 Watts	6.00 Metres	Galvanised Steel	
Y	1	STREET LIGHTING	PELHAM PLACE	GRIMSBY	526365.63	406343.2	1993		55152	Urbis	Axia 16 LED 350mA	19 Watts	5.00 Metres	Galvanised Steel	
Y	2	STREET LIGHTING	PELHAM PLACE	GRIMSBY	526387.65	406343.7	1993		55153	Urbis	Axia 16 LED 350mA	19 Watts	5.00 Metres	Galvanised Steel	
Y	3	STREET LIGHTING	PELHAM PLACE	GRIMSBY	526414.61	406337.44	1993		55154	Urbis	Axia 16 LED 350mA	19 Watts	5.00 Metres	Galvanised Steel	
Y	1	STREET LIGHTING	PINFOLD LANE	GRIMSBY	526616.68	406166.49	2006		55511	DW Windsor	Lancaster 15 LED	30 Watts	6.00 Metres	Steel	
Y	2	STREET LIGHTING	PINFOLD LANE	GRIMSBY	526578.91	406148.92	2006		55512	DW Windsor	Lancaster 15 LED	30 Watts	6.00 Metres	Steel	
Y	3	STREET LIGHTING	PINFOLD LANE	GRIMSBY	526551.14	406159.6	2006		55513	DW Windsor	Lancaster 15 LED	30 Watts	6.00 Metres	Steel	
Y	4	STREET LIGHTING	PINFOLD LANE	GRIMSBY	526548.18	406181.63	2006		55514	DW Windsor	Lancaster 15 LED	30 Watts	6.00 Metres	Steel	
Y	5	STREET LIGHTING	PINFOLD LANE	GRIMSBY	526550.01	406205.6	2006		55515	DW Windsor	Lancaster 15 LED	30 Watts	6.00 Metres	Steel	
Y	6	STREET LIGHTING	PINFOLD LANE	GRIMSBY	526535.66	406245.78	2006		55516	DW Windsor	Lancaster 15 LED	30 Watts	6.00 Metres	Steel	
Y	7	STREET LIGHTING	PINFOLD LANE	GRIMSBY	526526.55	406282.16	2006		55517	DW Windsor	Lancaster 15 LED	30 Watts	6.00 Metres	Steel	
Y	1	STREET LIGHTING	ROSAIRE PLACE	GRIMSBY	526961.21	405871.27	2017	30/06/2017	56252	1 Urbis LED	Axia 16 LED 500mA	28 Watts	6.00 Metres	Galvanised Steel	
Y	2	STREET LIGHTING	ROSAIRE PLACE	GRIMSBY	526987.04	405841.83	2017	30/06/2017	56251	1 Urbis LED	Axia 16 LED 500mA	28 Watts	6.00 Metres	Galvanised Steel	
Y	3	STREET LIGHTING	ROSAIRE PLACE	GRIMSBY	527001.04	405806.88	2017	30/06/2017	56250	1 Urbis LED	Axia 16 LED 500mA	28 Watts	6.00 Metres	Galvanised Steel	
Y	4	STREET LIGHTING	ROSAIRE PLACE	GRIMSBY	527023.64	405773.67	2017	30/06/2017	56249	1 Urbis LED	Axia 16 LED 500mA	28 Watts	6.00 Metres	Galvanised Steel	
Y	5	STREET LIGHTING	ROSAIRE PLACE	GRIMSBY	527052.55	405744.58	2017	30/06/2017	56248	1 Urbis LED	Axia 16 LED 500mA	28 Watts	6.00 Metres	Galvanised Steel	
Y	6	STREET LIGHTING	ROSAIRE PLACE	GRIMSBY	527064.35	405713.21	2017	30/06/2017	56247	1 Urbis LED	Axia 16 LED 500mA	28 Watts	6.00 Metres	Galvanised Steel	
Y	7	STREET LIGHTING	ROSAIRE PLACE	GRIMSBY	527078.07	405692.71	2017	30/06/2017	66711	Urbis	Axia 16 LED 350mA	19 Watts	6.00 Metres	Galvanised Steel	
Y	1	STREET LIGHTING	ST GILES AVENUE	GRIMSBY	526627.4	406216.51	1998		57676	1 Urbis LED	Axia 16 LED 500mA	28 Watts	6.00 Metres	Steel	
Y	2	STREET LIGHTING	ST GILES AVENUE	GRIMSBY	526651.7	406226.37	1998		57677	1 Urbis LED	Axia 16 LED 500mA	28 Watts	6.00 Metres	Steel	
Y	3	STREET LIGHTING	ST GILES AVENUE	GRIMSBY	526678.03	406237.6	1998		57678	1 Urbis LED	Axia 16 LED 500mA	28 Watts	6.00 Metres	Steel	
Y	4	STREET LIGHTING	ST GILES AVENUE	GRIMSBY	526714.49	406239.53	1998		57679	1 Urbis LED	Axia 16 LED 500mA	28 Watts	6.00 Metres	Steel	
Y	5	STREET LIGHTING	ST GILES AVENUE	GRIMSBY	526740.63	406256.75	1998		57680	1 Urbis LED	Axia 16 LED 500mA	28 Watts	6.00 Metres	Steel	
Y	6	STREET LIGHTING	ST GILES AVENUE	GRIMSBY	526778.93	406253.89	1998		57681	1 Urbis LED	Axia 16 LED 500mA	28 Watts	6.00 Metres	Steel	
Y	7	STREET LIGHTING	ST GILES AVENUE	GRIMSBY	526807.83	406270.19	1998		57682	1 Urbis LED	Axia 16 LED 500mA	28 Watts	6.00 Metres	Steel	
Y	8	STREET LIGHTING	ST GILES AVENUE	GRIMSBY	526838.95	406266.14	1998		57683	1 Urbis LED	Axia 16 LED 500mA	28 Watts	6.00 Metres	Steel	
Y	9	STREET LIGHTING	ST GILES AVENUE	GRIMSBY	526867.67	406273.78	1998		57684	1 Urbis LED	Axia 16 LED 500mA	28 Watts	6.00 Metres	Steel	
Y	10	STREET LIGHTING	ST GILES AVENUE	GRIMSBY	526891.24	406280.04	1998		57685	1 Urbis LED	Axia 16 LED 500mA	28 Watts	6.00 Metres	Steel	
Y	11	STREET LIGHTING	ST GILES AVENUE	GRIMSBY	526917.94	406291.55	1998		57686	1 Urbis LED	Axia 16 LED 500mA	28 Watts	6.00 Metres	Steel	
Y	12	STREET LIGHTING	ST GILES AVENUE	GRIMSBY	526931.56	406315.39	1998		57687	1 Urbis LED	Axia 16 LED 500mA	28 Watts	6.00 Metres	Steel	
Y	13	STREET LIGHTING	ST GILES AVENUE	GRIMSBY	526961.2	406323.59	1998		57688	1 Urbis LED	Axia 16 LED 500mA	28 Watts	6.00 Metres	Steel	
Y	14	STREET LIGHTING	ST GILES AVENUE	GRIMSBY	526981.46	406338.04	1998		57689	1 Urbis LED	Axia 16 LED 500mA	28 Watts	6.00 Metres	Steel	
Y	1	STREET LIGHTING	SOPHIA AVENUE	GRIMSBY	526066.42	406242.67	2015	30/07/2015	57326	1 Urbis LED	Axia 16 LED 500mA	28 Watts	6.00 Metres	Galvanised Steel	
Y	2	STREET LIGHTING	SOPHIA AVENUE	GRIMSBY	526098.82	406250.84	2015	30/07/2015	57327	1 Urbis LED	Axia 16 LED 500mA	28 Watts	6.00 Metres	Galvanised Steel	
Y	3	STREET LIGHTING	SOPHIA AVENUE	GRIMSBY	526133.38	406264.95	2015	30/07/2015	57328	1 Urbis LED	Axia 16 LED 500mA	28 Watts	6.00 Metres	Galvanised Steel	
Y	4	STREET LIGHTING	SOPHIA AVENUE	GRIMSBY	526164.9	406277.8	1963		57329	1 Urbis LED	Axia 16 LED 500mA	28 Watts	5.00 Metres	Steel	
Y	5	STREET LIGHTING	SOPHIA AVENUE	GRIMSBY	526182.11	406297.73	1963		57330	1 Urbis LED	Axia 16 LED 500mA	28 Watts	5.00 Metres	Steel	
Y	1	STREET LIGHTING	SOUTHERN WALK	GRIMSBY	526735.51	405189.99	2017	30/06/2017	57406	Urbis	Axia 16 LED 350mA	19 Watts	6.00 Metres	Galvanised Steel	
Y	2	STREET LIGHTING	SOUTHERN WALK	GRIMSBY	526768.05	405207.61	2017	30/06/2017	57405	Urbis	Axia 16 LED 350mA	19 Watts	6.00 Metres	Galvanised Steel	
Y	3	STREET LIGHTING	SOUTHERN WALK	GRIMSBY	526803.23	405217.31	2017	30/06/2017	57404	Urbis	Axia 16 LED 350mA	19 Watts	6.00 Metres	Galvanised Steel	
Y	4	STREET LIGHTING	SOUTHERN WALK	GRIMSBY	526832.61	405212.61	2017	30/06/2017	57403	Urbis	Axia 16 LED 350mA	19 Watts	6.00 Metres	Galvanised Steel	
Y	5	STREET LIGHTING	SOUTHERN WALK	GRIMSBY	526875.06	405226.47	2017	30/06/2017	57402	Urbis	Axia 16 LED 350mA	19 Watts	6.00 Metres	Galvanised Steel	
Y	6	STREET LIGHTING	SOUTHERN WALK	GRIMSBY	526908.01	405222.47	2017	30/06/2017	57401	Urbis	Axia 16 LED 350mA	19 Watts	6.00 Metres	Galvanised Steel	
Y	7	STREET LIGHTING	SOUTHERN WALK	GRIMSBY	526943.02	405235.34	2017	30/06/2017	57400	Urbis	Axia 16 LED 350mA	19 Watts	6.00 Metres	Galvanised Steel	
Y	8	STREET LIGHTING	SOUTHERN WALK	GRIMSBY	526995.12	405233.63	2017	30/06/2017	57399	Urbis	Axia 16 LED 350mA	19 Watts	6.00 Metres	Galvanised Steel	
Y	9	STREET LIGHTING	SOUTHERN WALK	GRIMSBY	527032.59	405238.21	2017	30/06/2017	57398	Urbis	Axia 16 LED 350mA	19 Watts	6.00 Metres	Galvanised Steel	
Y	1	STREET LIGHTING	SOUTHFIELD ROAD	GRIMSBY	526589.99	405312.26	2010		57413	1 Urbis LED	Teceo 24 LED 500mA	40 Watts	6.00 Metres	Steel	
Y	2	STREET LIGHTING	SOUTHFIELD ROAD	GRIMSBY	526611.31	405309.32	2010		57414	1 Urbis LED	Teceo 24 LED 500mA	40 Watts	6.00 Metres	Steel	
Y	3	STREET LIGHTING	SOUTHFIELD ROAD	GRIMSBY	526630.84	405326.39	2010		57415	1 Urbis LED	Teceo 24 LED 500mA	40 Watts	6.00 Metres	Steel	
Y	4	STREET LIGHTING	SOUTHFIELD ROAD	GRIMSBY	526661.32	405335.55	2003		57416	1 Urbis LED	Teceo 24 LED 500mA	40 Watts	6.00 Metres	Stainless Steel	
Y	5	STREET LIGHTING	SOUTHFIELD ROAD	GRIMSBY	526701.56	405348.26	2015	30/07/2015	57417	1 Urbis LED	Teceo 24 LED 500mA	40 Watts	6.00 Metres	Galvanised Steel	
Y	6	STREET LIGHTING	SOUTHFIELD ROAD	GRIMSBY	526742.66	405362.14	2007		57418	1 Urbis LED	Teceo 24 LED 500mA	40 Watts	6.00 Metres	Steel	
Y	7	STREET LIGHTING	SOUTHFIELD ROAD	GRIMSBY	526765.4	405369.28	2007		57419	1 Urbis LED	Teceo 24 LED 500mA	40 Watts	6.00 Metres	Steel	
Y	8	STREET LIGHTING	SOUTHFIELD ROAD	GRIMSBY	526783.86	405373.85	2015	30/07/2015	57420	1 Urbis LED	Teceo 24 LED 500mA	40 Watts	6.00 Metres	Galvanised Steel	
Y	9	STREET LIGHTING	SOUTHFIELD ROAD	GRIMSBY	526818.19	405374.29	2016	30/06/2016	60312	Urbis	Teceo 24 LED 500mA	40 Watts	6.00 Metres	Galvanised Steel	
Y	1	STREET LIGHTING	SPURN AVENUE	GRIMSBY	526879.7	405720.82	1997		57555	Urbis	Axia 16 LED 350mA	19 Watts	5.00 Metres	Galvanised Steel	
Y	2	STREET LIGHTING	SPURN AVENUE	GRIMSBY	526852.82	405704.44	1997		57556	Urbis	Axia 16 LED 350mA	19 Watts	5.00 Metres	Galvanised Steel	
Y	3	STREET LIGHTING	SPURN AVENUE	GRIMSBY	526825.2	405695.6	1997		57557	Urbis	Axia 16 LED 350mA	19 Watts	5.00 Metres	Galvanised Steel	
Y	4	STREET LIGHTING	SPURN AVENUE	GRIMSBY	526800.16	405680.23	1997		57558	Urbis	Axia 16 LED 350mA	19 Watts	5.00 Metres	Galvanised Steel	
Y	5	STREET LIGHTING	SPURN AVENUE	GRIMSBY	526774.39	405663.93	1997		57559	Urbis	Axia 16 LED 350mA	19 Watts	5.00 Metres	Galvanised Steel	
Y	1	STREET LIGHTING	ULSTER AVENUE	GRIMSBY	526784	406786.81	2007		59504	1 Urbis LED	Axia 16 LED 500mA	28 Watts	6.00 Metres	Steel	
Y	2	STREET LIGHTING	ULSTER AVENUE	GRIMSBY	526764.15	406791.72	2007		59505	1 Urbis LED	Axia 16 LED 500mA	28 Watts	6.00 Metres	Steel	
Y	3	STREET LIGHTING	ULSTER AVENUE	GRIMSBY	526740.85	406804.38	2015	30/07/2015	59506	1 Urbis LED	Axia 16 LED 500mA	28 Watts	6.00 Metres	Galvanised Steel	
Y	1	STREET LIGHTING	WALKER AVENUE	GRIMSBY	526733.38	405699.73	1997		59703	Urbis	Axia 16 LED 350mA	19 Watts	5.00 Metres	Galvanised Steel	
Y	2	STREET LIGHTING	WALKER AVENUE	GRIMSBY	526744.64	405681.44	1997		59704	Urbis	Axia 16 LED 350mA	19 Watts	5.00 Metres	Galvanised Steel	
Y	3	STREET LIGHTING	WALKER AVENUE	GRIMSBY	526761.23	405653.84	1997		59705	Urbis	Axia 16 LED 350mA	19 Watts	5.00 Metres	Galvanised Steel	
Y	4	STREET LIGHTING	WALKER AVENUE	GRIMSBY	526786.03	405634.03	1997		59706	Urbis	Axia 16 LED 350mA	19 Watts	5.00 Metres	Galvanised Steel	
Y	5	STREET LIGHTING	WALKER AVENUE	GRIMSBY	526795.91	405610.17	1997		59707	Urbis	Axia 16 LED 350mA	19 Watts	5.00 Metres	Galvanised Steel	
Y	6	STREET LIGHTING	WALKER AVENUE	GRIMSBY	526809.83	405591.63	1997		59708	Urbis	Axia 16 LED 350mA	19 Watts	5.00 Metres	Galvanised Steel	
Y	1	STREET LIGHTING	WALTHAM ROAD	GRIMSBY	526476.73	406292.81	1946		59751	1 Urbis LED	Teceo 48 LED 700mA	104 Watts	8.00 Metres	Steel	
Y	2	STREET LIGHTING	WALTHAM ROAD	GRIMSBY	526460.34	406260.31	1946		59752	1 Urbis LED	Teceo 48 LED 700mA	104 Watts	8.00 Metres	Steel	
Y	3	STREET LIGHTING	WALTHAM ROAD	GRIMSBY	526467.34	406220.54	1997		59753	1 Urbis LED	Teceo 48 LED 700mA	104 Watts	8.00 Metres	Galvanised Steel	
Y	4	STREET LIGHTING	WALTHAM ROAD	GRIMSBY	526455.74	406187.86	1946		59754	1 Urbis LED	Teceo 48 LED 700mA	104 Watts	8.00 Metres	Steel	
Y	5	STREET LIGHTING	WALTHAM ROAD	GRIMSBY	526470.65	406164.3	1998		59755	1 Urbis LED	Teceo 48 LED 700mA	104 Watts	8.00 Metres	Galvanised Steel	
Y	6	STREET LIGHTING	WALTHAM ROAD	GRIMSBY	526466.97	406131.16	1946		59756	1 Urbis LED	Teceo 48 LED 700mA	104 Watts	8.00 Metres	Steel	
Y	7	STREET LIGHTING	WALTHAM ROAD	GRIMSBY	526481.88	406116.34	1946		59757	1 Urbis LED	Teceo 48 LED 700mA	104 Watts	8.00 Metres	Steel	

Y	8	STREET LIGHTING	WALTHAM ROAD	GRIMSBY	526476.03	406091.47	2004		59758	1 Urbis LED	Teceo 48 LED 700mA	104 Watts	8.00 Metres	Stainless Steel	
Y	9	STREET LIGHTING	WALTHAM ROAD	GRIMSBY	526494.77	406070.58	1946		59759	1 Urbis LED	Teceo 48 LED 700mA	104 Watts	8.00 Metres	Steel	
Y	10	STREET LIGHTING	WALTHAM ROAD	GRIMSBY	526502.14	406043.61	1946		59760	1 Urbis LED	Teceo 48 LED 700mA	104 Watts	8.00 Metres	Steel	
Y	11	STREET LIGHTING	WALTHAM ROAD	GRIMSBY	526499.74	406003.66	1946		59761	1 Urbis LED	Teceo 48 LED 700mA	104 Watts	8.00 Metres	Steel	
Y	12	STREET LIGHTING	WALTHAM ROAD	GRIMSBY	526520.18	405977.61	1946		59762	1 Urbis LED	Teceo 48 LED 700mA	104 Watts	8.00 Metres	Steel	
Y	13	STREET LIGHTING	WALTHAM ROAD	GRIMSBY	526518.15	405935.72	1946		59763	1 Urbis LED	Teceo 48 LED 700mA	104 Watts	8.00 Metres	Steel	
Y	14	STREET LIGHTING	WALTHAM ROAD	GRIMSBY	526539.51	405901.84	1946		59764	1 Urbis LED	Teceo 48 LED 700mA	104 Watts	8.00 Metres	Steel	
Y	15	STREET LIGHTING	WALTHAM ROAD	GRIMSBY	526533.43	405864.93	1997		59765	1 Urbis LED	Teceo 48 LED 700mA	104 Watts	8.00 Metres	Galvanised Steel	
Y	16	STREET LIGHTING	WALTHAM ROAD	GRIMSBY	526556.08	405826.91	1946		59766	Urbis	AXIA 3.3 48 LED 540mA	78 Watts	8.00 Metres	Steel	
Y	17	STREET LIGHTING	WALTHAM ROAD	GRIMSBY	526552.14	405791.98	2024	18/09/2024	69896	Urbis	Teceo 48 LED 700mA	104 Watts	8.00 Metres	Galvanised Steel	
Y	18	STREET LIGHTING	WALTHAM ROAD	GRIMSBY	526570.26	405753.54	1946		59768	1 Urbis LED	Teceo 48 LED 700mA	104 Watts	8.00 Metres	Steel	
Y	19	STREET LIGHTING	WALTHAM ROAD	GRIMSBY	526573.57	405721.41	1946		59769	1 Urbis LED	Teceo 48 LED 700mA	104 Watts	8.00 Metres	Steel	
Y	20	STREET LIGHTING	WALTHAM ROAD	GRIMSBY	526574.31	405683.3	1946		59770	1 Urbis LED	Teceo 48 LED 700mA	104 Watts	8.00 Metres	Steel	
Y	21	STREET LIGHTING	WALTHAM ROAD	GRIMSBY	526572.47	405651.36	1998		59771	1 Urbis LED	Teceo 48 LED 700mA	104 Watts	8.00 Metres	Galvanised Steel	
Y	22	STREET LIGHTING	WALTHAM ROAD	GRIMSBY	526561.42	405610.76	1946		59772	1 Urbis LED	Teceo 48 LED 700mA	104 Watts	8.00 Metres	Steel	
Y	23	STREET LIGHTING	WALTHAM ROAD	GRIMSBY	526542.82	405573.75	1946		59773	1 Urbis LED	Teceo 48 LED 700mA	104 Watts	8.00 Metres	Steel	
Y	24	STREET LIGHTING	WALTHAM ROAD	GRIMSBY	526541.72	405535.55	1946		59774	Urbis	AXIA 3.3 48 LED 540mA	78 Watts	8.00 Metres	Steel	
Y	25	STREET LIGHTING	WALTHAM ROAD	GRIMSBY	526531.96	405497.44	1946		59775	Urbis	AXIA 3.3 48 LED 540mA	78 Watts	8.00 Metres	Steel	
Y	26	STREET LIGHTING	WALTHAM ROAD	GRIMSBY	526515.94	405468.07	1998		59776	1 Urbis LED	Teceo 48 LED 700mA	104 Watts	8.00 Metres	Galvanised Steel	
Y	27	STREET LIGHTING	WALTHAM ROAD	GRIMSBY	526517.6	405430.6	1946		59777	1 Urbis LED	Teceo 48 LED 700mA	104 Watts	8.00 Metres	Steel	
Y	28	STREET LIGHTING	WALTHAM ROAD	GRIMSBY	526527.04	405398.44	2021	10/12/2021	68791	Urbis	Teceo 48 LED 700mA	104 Watts	8.00 Metres	Galvanised Steel	
Y	29	STREET LIGHTING	WALTHAM ROAD	GRIMSBY	526555.34	405366.35	1946		59779	1 Urbis LED	Teceo 48 LED 700mA	104 Watts	8.00 Metres	Steel	
Y	30	STREET LIGHTING	WALTHAM ROAD	GRIMSBY	526569.33	405332.01	1946		59780	Urbis	AXIA 3.3 48 LED 540mA	78 Watts	8.00 Metres	Steel	
Y	31	STREET LIGHTING	WALTHAM ROAD	GRIMSBY	526566.35	405304.11	2024	30/08/2024	69969	Urbis	Teceo 48 LED 700mA	104 Watts	8.00 Metres	Galvanised Steel	
Y	32	STREET LIGHTING	WALTHAM ROAD	GRIMSBY	526579.64	405263.8	1946		59782	1 Urbis LED	Teceo 48 LED 700mA	104 Watts	8.00 Metres	Steel	
Y	33	STREET LIGHTING	WALTHAM ROAD	GRIMSBY	526578.72	405227.07	1946		59783	1 Urbis LED	Teceo 48 LED 700mA	104 Watts	8.00 Metres	Steel	
Y	34	STREET LIGHTING	WALTHAM ROAD	GRIMSBY	526576.7	405196.41	1946		59784	Urbis	AXIA 3.3 48 LED 540mA	78 Watts	8.00 Metres	Steel	
Y	35	STREET LIGHTING	WALTHAM ROAD	GRIMSBY	526571.72	405155.91	1946		59785	Urbis	AXIA 3.3 48 LED 540mA	78 Watts	8.00 Metres	Steel	
Y	36	STREET LIGHTING	WALTHAM ROAD	GRIMSBY	526552.94	405124.15	2002		59786	1 Urbis LED	Teceo 48 LED 700mA	104 Watts	8.00 Metres	Stainless Steel	
Y	37	STREET LIGHTING	WALTHAM ROAD	GRIMSBY	526543.55	405093.31	1989		59787	1 Urbis LED	Teceo 48 LED 700mA	104 Watts	10.00 Metres	Galvanised Steel	
Y	38	STREET LIGHTING	WALTHAM ROAD	GRIMSBY	526552.94	405055.01	1989		59788	Urbis	AXIA 3.3 48 LED 540mA	78 Watts	10.00 Metres	Galvanised Steel	
Y	39	STREET LIGHTING	WALTHAM ROAD	GRIMSBY	526546.12	405021.4	2014		59789	1 Urbis LED	Teceo 48 LED 700mA	104 Watts	10.00 Metres	Galvanised Steel	
Y	40	STREET LIGHTING	WALTHAM ROAD	GRIMSBY	526559.39	404989.83	1989		59790	1 Urbis LED	Teceo 48 LED 700mA	104 Watts	10.00 Metres	Galvanised Steel	
Y	41	STREET LIGHTING	WALTHAM ROAD	GRIMSBY	526561.23	404951.63	1989		59791	1 Urbis LED	Teceo 48 LED 700mA	104 Watts	10.00 Metres	Galvanised Steel	
Y	42	STREET LIGHTING	WALTHAM ROAD	GRIMSBY	526559.2	404918.95	1989		59792	1 Urbis LED	Teceo 48 LED 700mA	104 Watts	10.00 Metres	Galvanised Steel	
Y	43	STREET LIGHTING	WALTHAM ROAD	GRIMSBY	526554.42	404883.14	1989		59793	1 Urbis LED	Teceo 48 LED 700mA	104 Watts	10.00 Metres	Galvanised Steel	
Y	44	STREET LIGHTING	WALTHAM ROAD	GRIMSBY	526548.53	404845.95	1989		59794	1 Urbis LED	Teceo 48 LED 700mA	104 Watts	10.00 Metres	Galvanised Steel	
Y	45	STREET LIGHTING	WALTHAM ROAD	GRIMSBY	526573.93	405929.45	2019	19/12/2019	67651	Urbis	Axia 8 LED 350mA	10 Watts	6.00 Metres	Galvanised Steel	
Y	1	STREET LIGHTING	WESTBOURNE GROVE	GRIMSBY	526728.27	405538.26	1989	05/05/2000	68506	Urbis	Axia 16 LED 350mA	19 Watts	6.00 Metres	Galvanised Steel	
Y	2	STREET LIGHTING	WESTBOURNE GROVE	GRIMSBY	526704.06	405519.27	1989	05/05/2000	68507	Urbis	Axia 16 LED 350mA	19 Watts	6.00 Metres	Galvanised Steel	
Y	3	STREET LIGHTING	WESTBOURNE GROVE	GRIMSBY	526667.83	405511.36	1989	05/05/2000	68508	Urbis	Axia 16 LED 350mA	19 Watts	6.00 Metres	Galvanised Steel	
Y	1	STREET LIGHTING	WESTKIRKE AVENUE	GRIMSBY	526735.87	406027.77	2015	30/07/2015	60533	1 Urbis LED	Axia 16 LED 500mA	28 Watts	6.00 Metres	Galvanised Steel	
Y	2	STREET LIGHTING	WESTKIRKE AVENUE	GRIMSBY	526767.91	406028.51	1998		60534	1 Urbis LED	Axia 16 LED 500mA	28 Watts	6.00 Metres	Galvanised Steel	
Y	3	STREET LIGHTING	WESTKIRKE AVENUE	GRIMSBY	526807.13	406051.43	2011	30/08/2011	60535	1 Urbis LED	Axia 16 LED 500mA	28 Watts	6.00 Metres	Galvanised Steel	
Y	4	STREET LIGHTING	WESTKIRKE AVENUE	GRIMSBY	526848.55	406056.31	2015	30/07/2015	60536	1 Urbis LED	Axia 16 LED 500mA	28 Watts	6.00 Metres	Galvanised Steel	
Y	5	STREET LIGHTING	WESTKIRKE AVENUE	GRIMSBY	526889.98	406080.52	1997		60537	1 Urbis LED	Axia 16 LED 500mA	28 Watts	6.00 Metres	Galvanised Steel	
Y	6	STREET LIGHTING	WESTKIRKE AVENUE	GRIMSBY	526917.6	406078.13	1963		60538	1 Urbis LED	Axia 16 LED 500mA	28 Watts	5.00 Metres	Steel	
Y	7	STREET LIGHTING	WESTKIRKE AVENUE	GRIMSBY	526939.14	406076.01	1983		60539	1 Urbis LED	Axia 16 LED 500mA	28 Watts	6.00 Metres	Galvanised Steel	
Y	8	STREET LIGHTING	WESTKIRKE AVENUE	GRIMSBY	526958.84	406044.81	1983		60540	1 Urbis LED	Axia 16 LED 500mA	28 Watts	6.00 Metres	Galvanised Steel	
Y	9	STREET LIGHTING	WESTKIRKE AVENUE	GRIMSBY	526990.88	406026.49	1983		60541	1 Urbis LED	Axia 16 LED 500mA	28 Watts	6.00 Metres	Galvanised Steel	
Y	10	STREET LIGHTING	WESTKIRKE AVENUE	GRIMSBY	527010.94	405996.2	1983		60542	1 Urbis LED	Axia 16 LED 500mA	28 Watts	6.00 Metres	Galvanised Steel	
Y	11	STREET LIGHTING	WESTKIRKE AVENUE	GRIMSBY	527043.72	405977.7	1983		60543	1 Urbis LED	Axia 16 LED 500mA	28 Watts	6.00 Metres	Galvanised Steel	
Y	12	STREET LIGHTING	WESTKIRKE AVENUE	GRIMSBY	527063.23	405947.96	1983		60544	1 Urbis LED	Axia 16 LED 500mA	28 Watts	6.00 Metres	Galvanised Steel	
Y	13	STREET LIGHTING	WESTKIRKE AVENUE	GRIMSBY	527085.33	405938.94	1983		60545	1 Urbis LED	Axia 16 LED 500mA	28 Watts	6.00 Metres	Galvanised Steel	
Y	14	STREET LIGHTING	WESTKIRKE AVENUE	GRIMSBY	527062.31	405927.99	1983		60546	1 Urbis LED	Axia 16 LED 500mA	28 Watts	6.00 Metres	Galvanised Steel	
Y	1	STREET LIGHTING	WEST LEA	GRIMSBY	526831.73	405366.57	2016	31/08/2016	60313	Urbis	Axia 16 LED 350mA	19 Watts	6.00 Metres	Galvanised Steel	
Y	2	STREET LIGHTING	WEST LEA	GRIMSBY	526833.13	405333.66	2016	31/08/2016	60314	Urbis	Axia 16 LED 350mA	19 Watts	6.00 Metres	Galvanised Steel	
Y	3	STREET LIGHTING	WEST LEA	GRIMSBY	526840.97	405303.79	2016	31/08/2016	60315	Urbis	Axia 16 LED 350mA	19 Watts	6.00 Metres	Galvanised Steel	
Y	4	STREET LIGHTING	WEST LEA	GRIMSBY	526840.22	405270.43	2016	31/08/2016	60316	Urbis	Axia 16 LED 350mA	19 Watts	6.00 Metres	Galvanised Steel	
Y	5	STREET LIGHTING	WEST LEA	GRIMSBY	526834.01	405232.84	2016	31/08/2016	60317	Urbis	Axia 16 LED 350mA	19 Watts	6.00 Metres	Galvanised Steel	
Y	1	STREET LIGHTING	FOOTPATH BETWEEN WESTKIRKE	GRIMSBY	526930.03	406100.08	2003		48793	Urbis	Axia 8 LED 350mA	10 Watts	6.00 Metres	Galvanised Steel	
Y	2	STREET LIGHTING	FOOTPATH BETWEEN WESTKIRKE	GRIMSBY	526920.04	406131.12	2003		48794	Urbis	Axia 8 LED 350mA	10 Watts	6.00 Metres	Galvanised Steel	
Y	3	STREET LIGHTING	FOOTPATH BETWEEN WESTKIRKE	GRIMSBY	526904.15	406172.91	2003		48795	Urbis	Axia 8 LED 350mA	10 Watts	6.00 Metres	Galvanised Steel	
Y	4	STREET LIGHTING	FOOTPATH BETWEEN WESTKIRKE	GRIMSBY	526899.76	406217.73	2003		48796	Urbis	Axia 8 LED 350mA	10 Watts	6.00 Metres	Galvanised Steel	
Y	5	STREET LIGHTING	FOOTPATH BETWEEN WESTKIRKE	GRIMSBY	526891.26	406261.27	2003		48797	Urbis	Axia 8 LED 350mA	10 Watts	6.00 Metres	Galvanised Steel	
Y	1	STREET LIGHTING	WOOD CLOSE	GRIMSBY	526551.13	405172.49	2020	30/06/2020	67890	Urbis	Axia 16 LED 350mA	19 Watts	6.00 Metres	Galvanised Steel	
Y	2	STREET LIGHTING	WOOD CLOSE	GRIMSBY	526520.43	405178.19	2020	30/06/2020	68168	Urbis	Axia 16 LED 350mA	19 Watts	6.00 Metres	Galvanised Steel	
Y	3	STREET LIGHTING	WOOD CLOSE	GRIMSBY	526488.31	405187.05	2020	30/06/2020	68169	Urbis	Teceo 24 LED 500mA	40 Watts	6.00 Metres	Galvanised Steel	
Y	1	STREET LIGHTING	WOODROW PARK	GRIMSBY	526647.57	406323.03	2007		61154	Urbis	Axia 16 LED 350mA	19 Watts	6.00 Metres	Steel	
Y	2	STREET LIGHTING	WOODROW PARK	GRIMSBY	526647.16	406357.04	2007		61155	Urbis	Axia 16 LED 350mA	19 Watts	6.00 Metres	Steel	
Y	3	STREET LIGHTING	WOODROW PARK	GRIMSBY	526637.72	406388.48	2007		61156	Urbis	Axia 16 LED 350mA	19 Watts	6.00 Metres	Steel	
Y	4	STREET LIGHTING	WOODROW PARK	GRIMSBY	526627.5	406419.84	2007		61157	Urbis	Axia 16 LED 350mA	19 Watts	6.00 Metres	Steel	
Y	5	STREET LIGHTING	WOODROW PARK	GRIMSBY	526609.38	406442.91	2007		61158	Urbis	Axia 16 LED 350mA	19 Watts	6.00 Metres	Steel	
Y	6	STREET LIGHTING	WOODROW PARK	GRIMSBY	526557.66	406446.25	2007		61159	Urbis	Axia 16 LED 350mA	19 Watts	6.00 Metres	Steel	
Y	7	STREET LIGHTING	WOODROW PARK	GRIMSBY	526579.73	406451.96	2007		61160	Urbis	Axia 16 LED 350mA	19 Watts	6.00 Metres	Steel	
Y	8	STREET LIGHTING	WOODROW PARK	GRIMSBY	526608.45	406467.58	2007		61161	Urbis	Axia 16 LED 350mA	19 Watts	6.00 Metres	Steel	
Y	9	STREET LIGHTING	WOODROW PARK	GRIMSBY	526639.94	406482.6	2007		61162	Urbis	Axia 16 LED 350mA	19 Watts	6.00 Metres	Steel	
Y	10	STREET LIGHTING	WOODROW PARK	GRIMSBY	526670.39	406493.96	2007		61163	Urbis	Axia 16 LED 350mA	19 Watts	6.00 Metres	Steel	
Y	11	STREET LIGHTING	WOODROW PARK	GRIMSBY	526696.62	406502.89	2007		61164	Urbis	Axia 16 LED 350mA	19 Watts	6.00 Metres	Steel	
Y	12	STREET LIGHTING	WOODROW PARK	GRIMSBY	526719.77	406508.39	2007		61165	Urbis	Axia 16 LED 350mA	19 Watts	6.00 Metres	Steel	
Y	1	STREET LIGHTING	PERMAIN CLOSE	GRIMSBY	527019.17	406477.39	1963		55306	Urbis	Axia 16 LED 350mA	19 Watts	5.00 Metres	Steel	
Y	2	STREET LIGHTING	PERMAIN CLOSE	GRIMSBY	527035.9	406451.34	2003		55307	Urbis	Axia 16 LED 350mA	19 Watts	5.00 Metres	Stainless Steel	
Y	3	STREET LIGHTING	PERMAIN CLOSE	GRIMSBY	527058.2	406462.86	2003		55308	Urbis	Axia 16 LED 350mA	19 Watts	5.00 Metres	Stainless Steel	
Y	4	STREET LIGHTING	PERMAIN CLOSE	GRIMSBY	527078.86	406454.76	2003		55309	Urbis	Axia 16 LED 350mA	19 Watts	5.00 Metres	Stainless Steel	
Y	5	STREET LIGHTING	PERMAIN CLOSE	GRIMSBY	527095.96	406438.48	2004		55310	Urbis	Axia 16 LED 350mA	19 Watts	5.00 Metres	Stainless Steel	
Y	6	STREET LIGHTING	PERMAIN CLOSE	GRIMSBY	527116.22	406430.62	2004		55311	Urbis	Axia 16 LED 350mA	19 Watts	5.00 Metres	Stainless Steel	
Y	7	STREET LIGHTING	PERMAIN CLOSE	GRIMSBY	527052.81	406439.48	2003		55312	Urbis	Axia 16 LED 350mA	19 Watts	5.00 Metres	Stainless Steel	
Y	8	STREET LIGHTING	PERMAIN CLOSE	GRIMSBY	527040.58	406418.17	2005		55313	Urbis	Axia 16 LED 350mA	19 Watts	6.00 Metres	Stainless Steel	
Y	1	STREET LIGHTING	SHAW DRIVE	GRIMSBY	527016.42	406012.53	1991		57089	Urbis	Axia 16 LED 350mA	19 Watts	6.00 Metres	Galvanised Steel	
Y	2	STREET LIGHTING	SHAW DRIVE	GRIMSBY	527042.2	406024.68	1991		57090	Urbis	Axia 16 LED 350mA	19 Watts	6.00 Metres	Galvanised Steel	
Y	3	STREET LIGHTING	SHAW DRIVE	GRIMSBY	527059.43	406041.23	2021	12/10/2021	68736	Urbis	Axia 16 LED 350mA	19 Watts	6.00 Metres	Galvanised Steel	
Y	4	STREET LIGHTING	SHAW DRIVE	GRIMSBY	527051.4	406055.16	1991		57092	Urbis	Axia 16 LED 350mA	19 Watts	6.00 Metres	Galvanised Steel	
Y	5	STREET LIGHTING	SHAW DRIVE	GRIMSBY	527040.72	406070.44	1991		57093	Urbis	Axia 16 LED 350mA	19 Watts	6.00 Metres	Galvanised Steel	
Y	6	STREET LIGHTING	SHAW DRIVE	GRIMSBY	527016.79	406089.59	1991		57094	Urbis	Axia 16 LED 350mA	19 Watts	5.00 Metres	Galvanised Steel	
Y	7	STREET LIGHTING	SHAW DRIVE	GRIMSBY	526999.48	406098.61	1991		57095	Urbis	Axia 16 LED 350mA	19 Watts	5.00 Metres	Galvanised Steel	
Y	8	STREET LIGHTING	SHAW DRIVE	GRIMSBY	527039.25	406093.27	1991		57096	Urbis	Axia 16 LED 350mA	19 Watts	6.00 Metres	Galvanised Steel	
Y	9	STREET LIGHTING	SHAW DRIVE	GRIMSBY	527068.71	406096.68	1991		57097	Urbis	Axia 16 LED 350mA	19 Watts	6.00 Metres	Galvanised Steel	
Y	10	STREET LIGHTING	SHAW DRIVE	GRIMSBY	527071.65	406038.68	1991		57098	Urbis	Axia 16 LED 350mA	19 Watts	5.00 Metres	Galvanised Steel	
Y	11	STREET LIGHTING	SHAW DRIVE	GRIMSBY	527097.8	406039.23	1991		57099	Urbis	Axia 16 LED 350mA	19 Watts	5.00 Metres	Galvanised Steel	
Y	12	STREET LIGHTING	SHAW DRIVE	GRIMSBY	527120.63	406049.27	1991		57100	Urbis	Axia 16 LED 350mA	19 Watts	5.00 Metres	Galvanised Steel	
Y	13	STREET LIGHTING	SHAW DRIVE	GRIMSBY	527094.85	406023.58	1991		57101	Urbis	Axia 16 LED 350mA	19 Watts	5.00 Metres	Galvanised Steel	
Y	14	STREET LIGHTING	SHAW DRIVE	GRIMSBY	527114.74	406005.63	1991		57102	Urbis	Axia 16 LED 350mA	19 Watts	5.00 Metres	Galvanised Steel	
Y	15	STREET LIGHTING	SHAW DRIVE	GRIMSBY	527139.59	405990.9	1991		57103	Urbis	Axia 16 LED 350mA	19 Watts	5.00 Metres	Galvanised Steel	
Y	16	STREET LIGHTING	SHAW DRIVE	GRIMSBY	527163.71	405985.66	1991		57104	Urbis	Axia 16 LED 350mA	19 Watts	5.00 Metres	Galvanised Steel	
Y	17	STREET LIGHTING	SHAW DRIVE	GRIMSBY	527179.91	406001.58	2008		57105	Urbis	Axia 16 LED 350mA	19 Watts	6.00 Metres	Steel	
Y	18	STREET LIGHTING	SHAW DRIVE	GRIMSBY	527146.77	405969.64	1991		57106	Urbis	Axia 16 LED 350mA	19 Watts	5.00 Metres	Galvanised Steel	
Y	19	STREET LIGHTING	SHAW DRIVE	GRIMSBY	527123.39	405964.48	1991		57107	Urbis	Axia 16 LED 350mA	19 Watts	5.00 Metres	Galvanised Steel	
Y	1	STREET LIGHTING	BECKHYTHE CLOSE	GRIMSBY	527133.47	406318	1989		43869	1 Urbis LED	Axia 16 LED 500mA	28 Watts	6.00 Metres	Galvanised Steel	
Y	2	STREET LIGHTING	BECKHYTHE CLOSE	GRIMSBY	527150.2	406293.26	1989		43870	1 Urbis LED	Axia 16 LED 500mA	28 Watts	6.00 Metres	Galvanised Steel	
Y	3	STREET LIGHTING	BECKHYTHE CLOSE	GRIMSBY	527161.85	406265.61	1989		43871	1 Urbis LED	Axia 16 LED 500mA	28 Watts	6.00 Metres	Galvanised Steel	

Y	4	STREET LIGHTING	BECKHYTHE CLOSE	GRIMSBY	527186.91	406251.62	1989		43872	1 Urbis LED	Axia 16 LED 500mA	28 Watts	6.00 Metres	Galvanised Steel	
Y	1	STREET LIGHTING	EAST END CLOSE	GRIMSBY	526937.43	406412.76	1963		47715	Urbis	Axia 16 LED 350mA	19 Watts	5.00 Metres	Steel	
Y	2	STREET LIGHTING	EAST END CLOSE	GRIMSBY	526961.55	406430.07	1963		47716	Urbis	Axia 16 LED 350mA	19 Watts	5.00 Metres	Steel	
Y	3	STREET LIGHTING	EAST END CLOSE	GRIMSBY	526940.92	406480.52	1963		47717	Urbis	Axia 16 LED 350mA	19 Watts	5.00 Metres	Steel	
Y	4	STREET LIGHTING	EAST END CLOSE	GRIMSBY	526934.11	406459.35	1963		47718	Urbis	Axia 16 LED 350mA	19 Watts	5.00 Metres	Steel	
Y	5	STREET LIGHTING	EAST END CLOSE	GRIMSBY	526958.6	406454.65	1963		47719	Urbis	Axia 16 LED 350mA	19 Watts	5.00 Metres	Steel	
Y	6	STREET LIGHTING	EAST END CLOSE	GRIMSBY	526975.54	406448.39	1963		47720	Urbis	Axia 16 LED 350mA	19 Watts	5.00 Metres	Steel	
Y	7	STREET LIGHTING	EAST END CLOSE	GRIMSBY	526981.25	406466.43	1963		47721	Urbis	Axia 16 LED 350mA	19 Watts	5.00 Metres	Steel	
Y	8	STREET LIGHTING	EAST END CLOSE	GRIMSBY	526999.84	406484.39	1963		47722	Urbis	Axia 16 LED 350mA	19 Watts	5.00 Metres	Steel	
Y	1	STREET LIGHTING	COLLEGE GARDENS	GRIMSBY	526884.51	406015.37	2015	30/07/2015	46377	Urbis	Axia 16 LED 350mA	19 Watts	6.00 Metres	Galvanised Steel	
Y	2	STREET LIGHTING	COLLEGE GARDENS	GRIMSBY	526910.65	405975.14	2015	30/07/2015	46378	Urbis	Axia 16 LED 350mA	19 Watts	6.00 Metres	Galvanised Steel	
Y	3	STREET LIGHTING	COLLEGE GARDENS	GRIMSBY	526945.08	405941.36	2015	30/07/2015	46379	Urbis	Axia 16 LED 350mA	19 Watts	6.00 Metres	Galvanised Steel	
Y	1	STREET LIGHTING	EASTFIELD AVENUE	GRIMSBY	526915.71	405461.08	1998		47756	Urbis	Axia 16 LED 350mA	19 Watts	6.00 Metres	Steel	
Y	2	STREET LIGHTING	EASTFIELD AVENUE	GRIMSBY			2024	20/09/2024	69983	Urbis	Axia 24 LED 500mA	28 Watts	6.00 Metres	Galvanised Steel	
Y	3	STREET LIGHTING	EASTFIELD AVENUE	GRIMSBY	526945.59	405410.06	1998		47758	Urbis	Axia 16 LED 350mA	19 Watts	6.00 Metres	Steel	
Y	4	STREET LIGHTING	EASTFIELD AVENUE	GRIMSBY	526964.32	405386.01	1998		47759	Urbis	Axia 16 LED 350mA	19 Watts	6.00 Metres	Steel	
Y	5	STREET LIGHTING	EASTFIELD AVENUE	GRIMSBY	526982.29	405362.66	1998		47760	Urbis	Axia 16 LED 350mA	19 Watts	6.00 Metres	Steel	
Y	6	STREET LIGHTING	EASTFIELD AVENUE	GRIMSBY	527007.23	405345	1998		47761	Urbis	Axia 16 LED 350mA	19 Watts	6.00 Metres	Steel	
Y	7	STREET LIGHTING	EASTFIELD AVENUE	GRIMSBY	527024.82	405322.28	1998		47762	Urbis	Axia 16 LED 350mA	19 Watts	6.00 Metres	Steel	
Y	8	STREET LIGHTING	EASTFIELD AVENUE	GRIMSBY	527035.46	405293.92	1998		47763	Urbis	Axia 16 LED 350mA	19 Watts	6.00 Metres	Steel	
Y	9	STREET LIGHTING	EASTFIELD AVENUE	GRIMSBY	527053.94	405268.92	1998		47764	Urbis	Axia 16 LED 350mA	19 Watts	6.00 Metres	Steel	
Y	10	STREET LIGHTING	EASTFIELD AVENUE	GRIMSBY	527071.02	405254.94	1998		47765	Urbis	Axia 16 LED 350mA	19 Watts	6.00 Metres	Steel	
Y	1	STREET LIGHTING	SOUTHFIELD AVENUE	GRIMSBY	526840.78	405396.13	1992		57407	1 Urbis LED	Teceo 24 LED 500mA	40 Watts	5.00 Metres	Galvanised Steel	
Y	2	STREET LIGHTING	SOUTHFIELD AVENUE	GRIMSBY	526870.97	405430.1	1992		57408	1 Urbis LED	Teceo 24 LED 500mA	40 Watts	5.00 Metres	Galvanised Steel	
Y	3	STREET LIGHTING	SOUTHFIELD AVENUE	GRIMSBY	526897.49	405469.32	1992		57409	1 Urbis LED	Teceo 24 LED 500mA	40 Watts	5.00 Metres	Galvanised Steel	
Y	4	STREET LIGHTING	SOUTHFIELD AVENUE	GRIMSBY	526924.74	405500.62	1963		57410	1 Urbis LED	Teceo 24 LED 500mA	40 Watts	5.00 Metres	Steel	
Y	5	STREET LIGHTING	SOUTHFIELD AVENUE	GRIMSBY	526955.11	405525.84	1992		57411	1 Urbis LED	Teceo 24 LED 500mA	40 Watts	5.00 Metres	Galvanised Steel	
Y	6	STREET LIGHTING	SOUTHFIELD AVENUE	GRIMSBY	526974.63	405557.05	1992		57412	1 Urbis LED	Teceo 24 LED 500mA	40 Watts	5.00 Metres	Galvanised Steel	
Y	1	STREET LIGHTING	CROSS LANE	GRIMSBY	526563.98	406236.28	2006		47099	DW Windsor	Lancaster 15 LED	30 Watts	6.00 Metres	Steel	
Y	1	STREET LIGHTING	SCARTHO ROAD CYCLE TRACK	GRIMSBY	526470.19	406605.17	1997		56738	Urbis	Axia 8 LED 350mA	10 Watts	5.00 Metres	Galvanised Steel	
Y	2	STREET LIGHTING	SCARTHO ROAD CYCLE TRACK	GRIMSBY	526466.14	406631.88	1997		56739	Urbis	Axia 8 LED 350mA	10 Watts	5.00 Metres	Galvanised Steel	
Y	3	STREET LIGHTING	SCARTHO ROAD CYCLE TRACK	GRIMSBY	526476.26	406685.19	1997		56740	Urbis	Axia 8 LED 350mA	10 Watts	5.00 Metres	Galvanised Steel	
Y	4	STREET LIGHTING	SCARTHO ROAD CYCLE TRACK	GRIMSBY	526479.71	406699.98	1997		56741	Urbis	Axia 8 LED 350mA	10 Watts	5.00 Metres	Galvanised Steel	
Y	1	STREET LIGHTING	FOOTPATH BETWEEN HAMPSTEAD	GRIMSBY	526048.27	406700.74	1998		48724	Urbis	Axia 8 LED 350mA	10 Watts	5.00 Metres	Galvanised Steel	
Y	1	STREET LIGHTING	BRAETON LANE	GRIMSBY	527186.46	405276.48	2020	09/07/2020	67884	Urbis	Axia 16 LED 350mA	19 Watts	6.00 Metres	Galvanised Steel	
Y	2	STREET LIGHTING	BRAETON LANE	GRIMSBY	527162.56	405260.03	2020	09/07/2020	68170	Urbis	Axia 16 LED 350mA	19 Watts	6.00 Metres	Galvanised Steel	
Y	1	STREET LIGHTING	SIDE LANE	GRIMSBY	527249.37	405270.58	2020	30/06/2020	67887	Urbis	Axia 16 LED 350mA	19 Watts	6.00 Metres	Galvanised Steel	
Y	2	STREET LIGHTING	SIDE LANE	GRIMSBY	527276.27	405289.88	2020	30/06/2020	68171	Urbis	Axia 16 LED 350mA	19 Watts	6.00 Metres	Galvanised Steel	
Y	1	STREET LIGHTING	SUNNY CORNER	GRIMSBY	526565.06	406352.73			67648	Urbis	Axia 8 LED 350mA	10 Watts	5.00 Metres	Steel	
Y	1	STREET LIGHTING	THE COPSE	GRIMSBY	526581.28	405700.97	1978		58957	Urbis	Axia 16 LED 350mA	19 Watts	5.00 Metres	Galvanised Steel	
Y	2	STREET LIGHTING	THE COPSE	GRIMSBY	526603.19	405712.76	1978		58958	Urbis	Axia 16 LED 350mA	19 Watts	5.00 Metres	Galvanised Steel	
Y	3	STREET LIGHTING	THE COPSE	GRIMSBY	526626.02	405728.59	1978		58959	Urbis	Axia 16 LED 350mA	19 Watts	5.00 Metres	Galvanised Steel	
Y	4	STREET LIGHTING	THE COPSE	GRIMSBY	526653.27	405736.42	1978		58960	Urbis	Axia 16 LED 350mA	19 Watts	5.00 Metres	Galvanised Steel	
Y	5	STREET LIGHTING	THE COPSE	GRIMSBY	526665.79	405731.63	1978		58961	Urbis	Axia 16 LED 350mA	19 Watts	5.00 Metres	Galvanised Steel	
Y	1	STREET LIGHTING	FAUCONBERG AVENUE	GRIMSBY	526166.77	406536.22	2006		48424	Urbis	Axia 16 LED 350mA	19 Watts	5.00 Metres	Stainless Steel	
Y	2	STREET LIGHTING	FAUCONBERG AVENUE	GRIMSBY	526166.62	406555.9	2006		48425	Urbis	Axia 16 LED 350mA	19 Watts	5.00 Metres	Stainless Steel	
Y	3	STREET LIGHTING	FAUCONBERG AVENUE	GRIMSBY	526173.66	406573.71	2006		48426	Urbis	Axia 16 LED 350mA	19 Watts	5.00 Metres	Stainless Steel	
Y	1	STREET LIGHTING	SCARTHO ROAD	GRIMSBY	526438.03	407814.16	1992		56694	1 Urbis LED	Ampera 48 LED 700mA	104 Watts	12.00 Metres	Steel	
Y	2	STREET LIGHTING	SCARTHO ROAD	GRIMSBY	526448.78	407770.51	2019	14/10/2019	67628	Urbis	Ampera 48 LED 700mA	104 Watts	12.00 Metres	Galvanised Steel	
Y	3	STREET LIGHTING	SCARTHO ROAD	GRIMSBY	526473.75	407738.21	1992		56696	1 Urbis LED	Ampera 48 LED 700mA	104 Watts	12.00 Metres	Steel	
Y	4	STREET LIGHTING	SCARTHO ROAD	GRIMSBY	526466.57	407696.79	1992		56697	1 Urbis LED	Ampera 48 LED 700mA	104 Watts	12.00 Metres	Steel	
Y	5	STREET LIGHTING	SCARTHO ROAD	GRIMSBY	526494.37	407661.9	1992		56698	1 Urbis LED	Ampera 48 LED 700mA	104 Watts	12.00 Metres	Steel	
Y	6	STREET LIGHTING	SCARTHO ROAD	GRIMSBY	526487	407617.16	1992		56699	1 Urbis LED	Ampera 48 LED 700mA	104 Watts	12.00 Metres	Steel	
Y	7	STREET LIGHTING	SCARTHO ROAD	GRIMSBY	526516.55	407583.5	2008		56700	1 Urbis LED	Ampera 48 LED 700mA	104 Watts	12.00 Metres	Steel	
Y	8	STREET LIGHTING	SCARTHO ROAD	GRIMSBY	526507.25	407535.59	1992		56701	1 Urbis LED	Ampera 48 LED 700mA	104 Watts	12.00 Metres	Steel	
Y	9	STREET LIGHTING	SCARTHO ROAD	GRIMSBY	526529.18	407524.18	2019	14/10/2019	67627	Urbis	Ampera 48 LED 700mA	104 Watts	12.00 Metres	Galvanised Steel	
Y	10	STREET LIGHTING	SCARTHO ROAD	GRIMSBY	526516.27	407499.13	1992		56703	1 Urbis LED	Ampera 48 LED 700mA	104 Watts	12.00 Metres	Steel	
Y	11	STREET LIGHTING	SCARTHO ROAD	GRIMSBY	526541.68	407469.21	2008		56704	1 Urbis LED	Ampera 48 LED 700mA	104 Watts	12.00 Metres	Steel	
Y	12	STREET LIGHTING	SCARTHO ROAD	GRIMSBY	526533.76	407421.99	1992		56705	1 Urbis LED	Ampera 48 LED 700mA	104 Watts	12.00 Metres	Steel	
Y	13	STREET LIGHTING	SCARTHO ROAD	GRIMSBY	526556.41	407382.04	1992		56706	1 Urbis LED	Ampera 48 LED 700mA	104 Watts	12.00 Metres	Steel	
Y	14	STREET LIGHTING	SCARTHO ROAD	GRIMSBY	526558.25	407348.43	1992		56707	1 Urbis LED	Teceo 48 LED 700mA	104 Watts	12.00 Metres	Steel	
Y	15	STREET LIGHTING	SCARTHO ROAD	GRIMSBY	526542.6	407304.62	1992		56708	1 Urbis LED	Ampera 48 LED 700mA	104 Watts	12.00 Metres	Steel	
Y	16	STREET LIGHTING	SCARTHO ROAD	GRIMSBY	526562.12	407268.44	1992		56709	1 Urbis LED	Ampera 48 LED 700mA	104 Watts	12.00 Metres	Steel	
Y	17	STREET LIGHTING	SCARTHO ROAD	GRIMSBY	526563.59	407225.35	1992		56710	1 Urbis LED	Ampera 48 LED 700mA	104 Watts	12.00 Metres	Steel	
Y	18	STREET LIGHTING	SCARTHO ROAD	GRIMSBY	526561.75	407187.7	1992		56711	1 Urbis LED	Ampera 48 LED 700mA	104 Watts	12.00 Metres	Steel	
Y	19	STREET LIGHTING	SCARTHO ROAD	GRIMSBY	526558.25	407155.02	1992		56712	1 Urbis LED	Ampera 48 LED 700mA	104 Watts	12.00 Metres	Steel	
Y	20	STREET LIGHTING	SCARTHO ROAD	GRIMSBY	526532.86	407115.5	1992		56713	Urbis	Teceo 48 LED 700mA	104 Watts	12.00 Metres	Steel	
Y	21	STREET LIGHTING	SCARTHO ROAD	GRIMSBY	526526.66	407083.71	2018	01/07/2018	56714	1 Urbis LED	Ampera 48 LED 700mA	104 Watts	12.00 Metres	Galvanised Steel	
Y	22	STREET LIGHTING	SCARTHO ROAD	GRIMSBY	526538.94	407043.51	1992		56715	1 Urbis LED	Ampera 48 LED 700mA	104 Watts	12.00 Metres	Steel	
Y	23	STREET LIGHTING	SCARTHO ROAD	GRIMSBY	526517.21	407010.83	1992		56716	1 Urbis LED	Ampera 48 LED 700mA	104 Watts	12.00 Metres	Steel	
Y	24	STREET LIGHTING	SCARTHO ROAD	GRIMSBY	526529.18	406979.44	1992		56717	1 Urbis LED	Ampera 48 LED 700mA	104 Watts	12.00 Metres	Steel	
Y	25	STREET LIGHTING	SCARTHO ROAD	GRIMSBY	526512.37	406959.64	2008		56718	1 Urbis LED	Ampera 48 LED 700mA	104 Watts	12.00 Metres	Steel	
Y	26	STREET LIGHTING	SCARTHO ROAD	GRIMSBY	526525.25	406939.85	1992		56719	1 Urbis LED	Ampera 48 LED 700mA	104 Watts	12.00 Metres	Steel	
Y	27	STREET LIGHTING	SCARTHO ROAD	GRIMSBY	526507.76	406910.39	1992		56720	1 Urbis LED	Ampera 48 LED 700mA	104 Watts	12.00 Metres	Steel	
Y	28	STREET LIGHTING	SCARTHO ROAD	GRIMSBY	526519.73	406871.55	1992		56721	1 Urbis LED	Ampera 48 LED 700mA	104 Watts	12.00 Metres	Steel	
Y	29	STREET LIGHTING	SCARTHO ROAD	GRIMSBY	526502.05	406839.79	1992		56722	1 Urbis LED	Ampera 48 LED 700mA	104 Watts	12.00 Metres	Steel	
Y	30	STREET LIGHTING	SCARTHO ROAD	GRIMSBY	526514.21	406803.06	2008		56723	1 Urbis LED	Ampera 48 LED 700mA	104 Watts	12.00 Metres	Steel	
Y	31	STREET LIGHTING	SCARTHO ROAD	GRIMSBY	526495.98	406764.48	1992		56724	1 Urbis LED	Ampera 48 LED 700mA	104 Watts	12.00 Metres	Steel	
Y	32	STREET LIGHTING	SCARTHO ROAD	GRIMSBY	526509.05	406734.66	1992		56725	1 Urbis LED	Ampera 48 LED 700mA	104 Watts	12.00 Metres	Steel	
Y	33	STREET LIGHTING	SCARTHO ROAD	GRIMSBY	526491.01	406710.26	2008		56726	1 Urbis LED	Ampera 48 LED 700mA	104 Watts	12.00 Metres	Steel	
Y	34	STREET LIGHTING	SCARTHO ROAD	GRIMSBY	526505.04	406685.71	1992		56727	1 Urbis LED	Ampera 48 LED 700mA	104 Watts	12.00 Metres	Steel	
Y	35	STREET LIGHTING	SCARTHO ROAD	GRIMSBY	526488.84	406662.42	1992		56728	1 Urbis LED	Ampera 48 LED 700mA	104 Watts	12.00 Metres	Steel	
Y	36	STREET LIGHTING	SCARTHO ROAD	GRIMSBY	526500.61	406627.72	1992		56729	1 Urbis LED	Ampera 48 LED 700mA	104 Watts	12.00 Metres	Steel	
Y	37	STREET LIGHTING	SCARTHO ROAD	GRIMSBY	526481.64	406582.62	1992		56730	1 Urbis LED	Ampera 48 LED 700mA	104 Watts	12.00 Metres	Steel	
Y	38	STREET LIGHTING	SCARTHO ROAD	GRIMSBY	526493.8	406545.33	1992		56731	1 Urbis LED	Ampera 48 LED 700mA	104 Watts	12.00 Metres	Steel	
Y	39	STREET LIGHTING	SCARTHO ROAD	GRIMSBY	526476.67	406519.1	2008		56732	1 Urbis LED	Ampera 48 LED 700mA	104 Watts	12.00 Metres	Steel	
Y	40	STREET LIGHTING	SCARTHO ROAD	GRIMSBY	526488.82	406479.7	1992		56733	1 Urbis LED	Ampera 48 LED 700mA	104 Watts	12.00 Metres	Steel	
Y	41	STREET LIGHTING	SCARTHO ROAD	GRIMSBY	526471.52	406442.04	1992		56734	1 Urbis LED	Ampera 48 LED 700mA	104 Watts	12.00 Metres	Steel	
Y	42	STREET LIGHTING	SCARTHO ROAD	GRIMSBY	526484.96	406426.86	1992		56735	1 Urbis LED	Ampera 48 LED 700mA	104 Watts	12.00 Metres	Steel	
Y	43	STREET LIGHTING	SCARTHO ROAD	GRIMSBY	526468.39	406402.74	1992		56736	1 Urbis LED	Ampera 48 LED 700mA	104 Watts	12.00 Metres	Steel	
Y	44	STREET LIGHTING	SCARTHO ROAD	GRIMSBY	526488.48	406385.26	1992		56737	1 Urbis LED	Ampera 48 LED 700mA	104 Watts	12.00 Metres	Steel	
Y	1	STREET LIGHTING	HAWTHORNE AVENUE	GRIMSBY	526645.19	405812.47	2019	19/12/2019	67649	Urbis	Axia 8 LED 350mA	10 Watts	6.00 Metres	Galvanised Steel	
Y	1	STREET LIGHTING	WREN CRESCENT	GRIMSBY	526104.52	406664.71	1993		61261	Urbis	Axia 16 LED 350mA	19 Watts	6.00 Metres	Galvanised Steel	
Y	2	STREET LIGHTING	WREN CRESCENT	GRIMSBY	526112.71	406681.87	2014		61262	Urbis	Axia 16 LED 350mA	19 Watts	6.00 Metres	Galvanised Steel	
Y	3	STREET LIGHTING	WREN CRESCENT	GRIMSBY	526103.58	406702.84	1993		61263	Urbis	Axia 16 LED 350mA	19 Watts	6.00 Metres	Galvanised Steel	
Y	4	STREET LIGHTING	WREN CRESCENT	GRIMSBY	526093.45	406722.52	1993		61264	Urbis	Axia 16 LED 350mA	19 Watts	6.00 Metres	Galvanised Steel	
Y	5	STREET LIGHTING	WREN CRESCENT	GRIMSBY	526073.02	406734.37	1993		61265	Urbis	Axia 16 LED 350mA	19 Watts	6.00 Metres	Galvanised Steel	
Y	6	STREET LIGHTING	WREN CRESCENT	GRIMSBY	526067.96	406750.76	1993		61266	Urbis	Axia 16 LED 350mA	19 Watts	6.00 Metres	Galvanised Steel	
Y	7	STREET LIGHTING	WREN CRESCENT	GRIMSBY	526042.14	406768.29	1993		61267	Urbis	Axia 16 LED 350mA	19 Watts	6.00 Metres	Galvanised Steel	
Y	8	STREET LIGHTING	WREN CRESCENT	GRIMSBY	526015.95	406764.83	2004		61268	Urbis	Axia 16 LED 350mA	19 Watts	6.00 Metres	Galvanised Steel	
Y	9	STREET LIGHTING	WREN CRESCENT	GRIMSBY	526027.35	406779.51	1993		61269	Urbis	Axia 16 LED 350mA	19 Watts	6.00 Metres	Galvanised Steel	
Y	10	STREET LIGHTING	WREN CRESCENT	GRIMSBY	526011.4	406784.7	1993		61270	Urbis	Axia 16 LED 350mA	19 Watts	6.00 Metres	Galvanised Steel	
Y	11	STREET LIGHTING	WREN CRESCENT	GRIMSBY	525996.46	406772.42	2000		61271	Urbis	Axia 16 LED 350mA	19 Watts	6.00 Metres	Galvanised Steel	
Y	12	STREET LIGHTING	WREN CRESCENT	GRIMSBY	525957.85	406779.32	1999		61272	Urbis	Axia 16 LED 350mA	19 Watts	6.00 Metres	Galvanised Steel	
Y	13	STREET LIGHTING	WREN CRESCENT	GRIMSBY	525926.66	406773.76	1999		61273	Urbis	Axia 16 LED 350mA	19 Watts	6.00 Metres	Galvanised Steel	
Y	14	STREET LIGHTING	WREN CRESCENT	GRIMSBY	525905.16	406759.33	2000		61274	Urbis	Axia 16 LED 350mA	19 Watts	6.00 Metres	Galvanised Steel	
Y	15	STREET LIGHTING	WREN CRESCENT	GRIMSBY	525874.09	406760.74	2000		61275	Urbis	Axia 16 LED 350mA	19 Watts	6.00 Metres	Galvanised Steel	
Y	16	STREET LIGHTING	WREN CRESCENT	GRIMSBY	525847.16	406773.47	2000		61276	Urbis	Axia 16 LED 350mA	19 Watts	6.00 Metres	Galvanised Steel	
Y	17	STREET LIGHTING	WREN CRESCENT	GRIMSBY	525822.29	406780.12	2000		61277	Urbis	Axia 16 LED 350mA	19 Watts	6.00 Metres	Galvanised Steel	
Y	18	STREET LIGHTING	WREN CRESCENT	GRIMSBY	525816.28	406761.39	2004		61278	Urbis	Axia 16 LED 350mA	19 Watts	6.00 Metres	Stainless Steel	

Y	19	STREET LIGHTING	WREN CRESCENT	GRIMSBY	525804.74	406777.67	2000		61279	Urbis	Axia 16 LED 350mA	19 Watts	6.00 Metres	Galvanised Steel	
Y	20	STREET LIGHTING	WREN CRESCENT	GRIMSBY	525784.92	406757.82	2000		61280	Urbis	Axia 16 LED 350mA	19 Watts	6.00 Metres	Galvanised Steel	
Y	21	STREET LIGHTING	WREN CRESCENT	GRIMSBY	525762.4	406762.79	2000		61281	Urbis	Axia 16 LED 350mA	19 Watts	6.00 Metres	Galvanised Steel	
Y	22	STREET LIGHTING	WREN CRESCENT	GRIMSBY	525745.59	406748.56	2000		61282	Urbis	Axia 16 LED 350mA	19 Watts	6.00 Metres	Galvanised Steel	
Y	23	STREET LIGHTING	WREN CRESCENT	GRIMSBY	525718.27	406752.46	2000		61283	Urbis	Axia 16 LED 350mA	19 Watts	6.00 Metres	Galvanised Steel	
Y	24	STREET LIGHTING	WREN CRESCENT	GRIMSBY	525695.81	406749.76	2000		61284	Urbis	Axia 16 LED 350mA	19 Watts	6.00 Metres	Galvanised Steel	
Y	25	STREET LIGHTING	WREN CRESCENT	GRIMSBY	525698.31	406731.37	1998		61285	Urbis	Axia 16 LED 350mA	19 Watts	6.00 Metres	Galvanised Steel	
Y	26	STREET LIGHTING	WREN CRESCENT	GRIMSBY	525681.56	406738.05	1998		61286	Urbis	Axia 16 LED 350mA	19 Watts	6.00 Metres	Galvanised Steel	
Y	27	STREET LIGHTING	WREN CRESCENT	GRIMSBY	525670.11	406714.23	2000		61287	Urbis	Axia 16 LED 350mA	19 Watts	6.00 Metres	Galvanised Steel	
Y	28	STREET LIGHTING	WREN CRESCENT	GRIMSBY	525661.06	406695.64	1999		61288	Urbis	Axia 16 LED 350mA	19 Watts	6.00 Metres	Galvanised Steel	
Y	29	STREET LIGHTING	WREN CRESCENT	GRIMSBY	525656.82	406676.84	1999		61289	Urbis	Axia 16 LED 350mA	19 Watts	6.00 Metres	Galvanised Steel	
Y	30	STREET LIGHTING	WREN CRESCENT	GRIMSBY	525656.4	406657.83	1999		61290	Urbis	Axia 16 LED 350mA	19 Watts	6.00 Metres	Galvanised Steel	
Y	1	STREET LIGHTING	BALDER COURT	GRIMSBY	526086.44	406742.91	1997		43568	Urbis	Axia 16 LED 350mA	19 Watts	5.00 Metres	Galvanised Steel	
Y	2	STREET LIGHTING	BALDER COURT	GRIMSBY	526089.73	406772.72	1997		43569	Urbis	Axia 16 LED 350mA	19 Watts	5.00 Metres	Galvanised Steel	
Y	3	STREET LIGHTING	BALDER COURT	GRIMSBY	526076.06	406790.51	1997		43570	Urbis	Axia 16 LED 350mA	19 Watts	5.00 Metres	Galvanised Steel	
Y	1	STREET LIGHTING	HAMPSTEAD PARK	GRIMSBY	526022.96	406709.53	1997		50123	Urbis	Axia 16 LED 350mA	19 Watts	5.00 Metres	Galvanised Steel	
Y	2	STREET LIGHTING	HAMPSTEAD PARK	GRIMSBY	526010.7	406690.74	2002		50124	Urbis	Axia 16 LED 350mA	19 Watts	5.00 Metres	Galvanised Steel	
Y	3	STREET LIGHTING	HAMPSTEAD PARK	GRIMSBY	526001.94	406698.77	1997		50125	Urbis	Axia 16 LED 350mA	19 Watts	5.00 Metres	Galvanised Steel	
Y	4	STREET LIGHTING	HAMPSTEAD PARK	GRIMSBY	525974.48	406706.43	1997		50126	Urbis	Axia 16 LED 350mA	19 Watts	5.00 Metres	Galvanised Steel	
Y	5	STREET LIGHTING	HAMPSTEAD PARK	GRIMSBY	525941.57	406695.04	1997		50127	Urbis	Axia 16 LED 350mA	19 Watts	5.00 Metres	Galvanised Steel	
Y	6	STREET LIGHTING	HAMPSTEAD PARK	GRIMSBY	525911.69	406699.72	1997		50128	Urbis	Axia 16 LED 350mA	19 Watts	5.00 Metres	Galvanised Steel	
Y	7	STREET LIGHTING	HAMPSTEAD PARK	GRIMSBY	525878.3	406700.33	1998		50129	Urbis	Axia 16 LED 350mA	19 Watts	5.00 Metres	Galvanised Steel	
Y	8	STREET LIGHTING	HAMPSTEAD PARK	GRIMSBY	525846.15	406688.36	1998		50130	Urbis	Axia 16 LED 350mA	19 Watts	5.00 Metres	Galvanised Steel	
Y	9	STREET LIGHTING	HAMPSTEAD PARK	GRIMSBY	525826.61	406701.19	1998		50131	Urbis	Axia 16 LED 350mA	19 Watts	5.00 Metres	Galvanised Steel	
Y	10	STREET LIGHTING	HAMPSTEAD PARK	GRIMSBY	525824.58	406676.83	1998		50132	Urbis	Axia 16 LED 350mA	19 Watts	5.00 Metres	Galvanised Steel	
Y	11	STREET LIGHTING	HAMPSTEAD PARK	GRIMSBY	525824.33	406645.75	1998		50133	Urbis	Axia 16 LED 350mA	19 Watts	5.00 Metres	Galvanised Steel	
Y	12	STREET LIGHTING	HAMPSTEAD PARK	GRIMSBY	525848.51	406646.57	1998		50134	1 Urbis LED	Axia 16 LED 500mA	28 Watts	5.00 Metres	Galvanised Steel	
Y	1	STREET LIGHTING	BELGRAVE ROAD	GRIMSBY	525530.94	406733.91	2003		43956	Urbis	Axia 8 LED 350mA	10 Watts	5.00 Metres	Galvanised Steel	
Y	2	STREET LIGHTING	BELGRAVE ROAD	GRIMSBY	525560.77	406740.28	2001		43957	Urbis	Axia 16 LED 350mA	19 Watts	5.00 Metres	Galvanised Steel	
Y	3	STREET LIGHTING	BELGRAVE ROAD	GRIMSBY	525587.33	406733.34	2001		43958	Urbis	Axia 16 LED 350mA	19 Watts	5.00 Metres	Galvanised Steel	
Y	4	STREET LIGHTING	BELGRAVE ROAD	GRIMSBY	525612.38	406743.1	2001		43959	Urbis	Axia 16 LED 350mA	19 Watts	5.00 Metres	Galvanised Steel	
Y	5	STREET LIGHTING	BELGRAVE ROAD	GRIMSBY	525634.19	406748.86	2001		43960	Urbis	Axia 16 LED 350mA	19 Watts	5.00 Metres	Galvanised Steel	
Y	6	STREET LIGHTING	BELGRAVE ROAD	GRIMSBY	525628.54	406770.27	2000		43961	Urbis	Axia 16 LED 350mA	19 Watts	6.00 Metres	Galvanised Steel	
Y	7	STREET LIGHTING	BELGRAVE ROAD	GRIMSBY	525633.14	406801.74	2000		43962	Urbis	Axia 16 LED 350mA	19 Watts	5.00 Metres	Galvanised Steel	
Y	8	STREET LIGHTING	BELGRAVE ROAD	GRIMSBY	525625.91	406838.02	2000		43963	Urbis	Axia 16 LED 350mA	19 Watts	6.00 Metres	Galvanised Steel	
Y	9	STREET LIGHTING	BELGRAVE ROAD	GRIMSBY	525652	406843.57	2000		43964	Urbis	Axia 16 LED 350mA	19 Watts	5.00 Metres	Galvanised Steel	
Y	10	STREET LIGHTING	BELGRAVE ROAD	GRIMSBY	525679.85	406836.68	2000		43965	Urbis	Axia 16 LED 350mA	19 Watts	5.00 Metres	Galvanised Steel	
Y	11	STREET LIGHTING	BELGRAVE ROAD	GRIMSBY	525692.76	406855.03	2000		43966	Urbis	Axia 16 LED 350mA	19 Watts	5.00 Metres	Galvanised Steel	
Y	1	STREET LIGHTING	BUCKINGHAM GROVE	GRIMSBY	525616.47	406792.3	2000		44894	Urbis	Axia 16 LED 350mA	19 Watts	6.00 Metres	Galvanised Steel	
Y	2	STREET LIGHTING	BUCKINGHAM GROVE	GRIMSBY	525601.47	406804.05	2000		44895	Urbis	Axia 16 LED 350mA	19 Watts	6.00 Metres	Galvanised Steel	
Y	3	STREET LIGHTING	BUCKINGHAM GROVE	GRIMSBY	525584.37	406794.19	2000		44896	Urbis	Axia 16 LED 350mA	19 Watts	6.00 Metres	Galvanised Steel	
Y	4	STREET LIGHTING	BUCKINGHAM GROVE	GRIMSBY	525561.36	406800.24	2000		44897	Urbis	Axia 16 LED 350mA	19 Watts	6.00 Metres	Galvanised Steel	
Y	5	STREET LIGHTING	BUCKINGHAM GROVE	GRIMSBY	525566.69	406820.22	2000		44898	Urbis	Axia 16 LED 350mA	19 Watts	6.00 Metres	Galvanised Steel	
Y	6	STREET LIGHTING	BUCKINGHAM GROVE	GRIMSBY	525576.12	406840.2	2000		44899	Urbis	Axia 16 LED 350mA	19 Watts	6.00 Metres	Galvanised Steel	
Y	7	STREET LIGHTING	BUCKINGHAM GROVE	GRIMSBY	525555.36	406832.42	2000		44900	Urbis	Axia 16 LED 350mA	19 Watts	6.00 Metres	Galvanised Steel	
Y	8	STREET LIGHTING	BUCKINGHAM GROVE	GRIMSBY	525542.3	406847.92	2000		44901	Urbis	Axia 16 LED 350mA	19 Watts	6.00 Metres	Galvanised Steel	
Y	9	STREET LIGHTING	BUCKINGHAM GROVE	GRIMSBY	525537.31	406834.53	2000		44902	Urbis	Axia 16 LED 350mA	19 Watts	6.00 Metres	Galvanised Steel	
Y	10	STREET LIGHTING	BUCKINGHAM GROVE	GRIMSBY	525518.13	406821.04	2001		44903	Urbis	Axia 16 LED 350mA	19 Watts	5.00 Metres	Galvanised Steel	
Y	1	STREET LIGHTING	UTGARD WAY	GRIMSBY	525807.07	406793.8	2000		59512	Urbis	Axia 16 LED 350mA	19 Watts	6.00 Metres	Galvanised Steel	
Y	2	STREET LIGHTING	UTGARD WAY	GRIMSBY	525808.86	406825.51	2000		59513	Urbis	Axia 16 LED 350mA	19 Watts	6.00 Metres	Galvanised Steel	
Y	3	STREET LIGHTING	UTGARD WAY	GRIMSBY	525796.83	406851.64	2000		59514	Urbis	Axia 16 LED 350mA	19 Watts	6.00 Metres	Galvanised Steel	
Y	4	STREET LIGHTING	UTGARD WAY	GRIMSBY	525803.94	406882.37	2000		59515	Urbis	Axia 16 LED 350mA	19 Watts	6.00 Metres	Galvanised Steel	
Y	1	STREET LIGHTING	FREYJA CROFT	GRIMSBY	525791.38	406814.1	2000		49035	Urbis	Axia 16 LED 350mA	19 Watts	5.00 Metres	Galvanised Steel	
Y	2	STREET LIGHTING	FREYJA CROFT	GRIMSBY	525759.69	406811.53	2000		49036	Urbis	Axia 16 LED 350mA	19 Watts	5.00 Metres	Galvanised Steel	
Y	3	STREET LIGHTING	FREYJA CROFT	GRIMSBY	525748.15	406778.93	2000		49037	Urbis	Axia 16 LED 350mA	19 Watts	5.00 Metres	Galvanised Steel	
Y	4	STREET LIGHTING	FREYJA CROFT	GRIMSBY	525740.27	406807.75	2000		49038	Urbis	Axia 16 LED 350mA	19 Watts	5.00 Metres	Galvanised Steel	
Y	5	STREET LIGHTING	FREYJA CROFT	GRIMSBY	525749.34	406834.55	2000		49039	Urbis	Axia 16 LED 350mA	19 Watts	5.00 Metres	Galvanised Steel	
Y	1	STREET LIGHTING	FENWICK ROAD	GRIMSBY	525850.71	406607.37	2000		48450	1 Urbis LED	Axia 16 LED 500mA	28 Watts	6.00 Metres	Galvanised Steel	
Y	2	STREET LIGHTING	FENWICK ROAD	GRIMSBY	525849.44	406584.53	2000		48451	1 Urbis LED	Axia 16 LED 500mA	28 Watts	6.00 Metres	Galvanised Steel	
Y	3	STREET LIGHTING	FENWICK ROAD	GRIMSBY	525842.23	406559.53	2000		48452	1 Urbis LED	Axia 16 LED 500mA	28 Watts	6.00 Metres	Galvanised Steel	
Y	4	STREET LIGHTING	FENWICK ROAD	GRIMSBY	525832.23	406537.44	2000		48453	1 Urbis LED	Axia 16 LED 500mA	28 Watts	6.00 Metres	Galvanised Steel	
Y	5	STREET LIGHTING	FENWICK ROAD	GRIMSBY	525818.18	406510.86	2000		48454	1 Urbis LED	Axia 16 LED 500mA	28 Watts	6.00 Metres	Galvanised Steel	
Y	6	STREET LIGHTING	FENWICK ROAD	GRIMSBY	525811.13	406489.49	2008		48455	1 Urbis LED	Axia 16 LED 500mA	28 Watts	6.00 Metres	Steel	
Y	7	STREET LIGHTING	FENWICK ROAD	GRIMSBY	525812.55	406468.76	2008		48456	1 Urbis LED	Axia 16 LED 500mA	28 Watts	6.00 Metres	Steel	
Y	8	STREET LIGHTING	FENWICK ROAD	GRIMSBY	525813.73	406442.7	2008		48457	1 Urbis LED	Axia 16 LED 500mA	28 Watts	6.00 Metres	Steel	
Y	9	STREET LIGHTING	FENWICK ROAD	GRIMSBY	525799.39	406423.64	2008		48458	1 Urbis LED	Axia 16 LED 500mA	28 Watts	6.00 Metres	Steel	
Y	10	STREET LIGHTING	FENWICK ROAD	GRIMSBY	525770.2	406416.9	2008		48459	1 Urbis LED	Axia 16 LED 500mA	28 Watts	6.00 Metres	Steel	
Y	11	STREET LIGHTING	FENWICK ROAD	GRIMSBY	525743.75	406424.92	2008		48460	1 Urbis LED	Axia 16 LED 500mA	28 Watts	6.00 Metres	Steel	
Y	12	STREET LIGHTING	FENWICK ROAD	GRIMSBY	525728.9	406409.67	2008		48461	1 Urbis LED	Axia 16 LED 500mA	28 Watts	6.00 Metres	Steel	
Y	1	STREET LIGHTING	BLOOMSBURY GARDEN	GRIMSBY	525618.14	406723.12	2002		44229	Urbis	Axia 16 LED 350mA	19 Watts	5.00 Metres	Galvanised Steel	
Y	2	STREET LIGHTING	BLOOMSBURY GARDEN	GRIMSBY	525618.27	406699.81	2002		44230	Urbis	Axia 16 LED 350mA	19 Watts	5.00 Metres	Galvanised Steel	
Y	3	STREET LIGHTING	BLOOMSBURY GARDEN	GRIMSBY	525625.46	406681.52	2002		44231	Urbis	Axia 16 LED 350mA	19 Watts	5.00 Metres	Galvanised Steel	
Y	1	STREET LIGHTING	HYDE PARK CLOSE	GRIMSBY	525564.93	406723.56	2002		51248	Urbis	Axia 16 LED 350mA	19 Watts	5.00 Metres	Galvanised Steel	
Y	2	STREET LIGHTING	HYDE PARK CLOSE	GRIMSBY	525557.8	406691.89	2002		51249	Urbis	Axia 16 LED 350mA	19 Watts	5.00 Metres	Galvanised Steel	
Y	3	STREET LIGHTING	HYDE PARK CLOSE	GRIMSBY	525562.98	406678.96	2002		51250	Urbis	Axia 16 LED 350mA	19 Watts	5.00 Metres	Galvanised Steel	
Y	1	STREET LIGHTING	VINCENT ROAD	GRIMSBY	525815.52	406546.94	2000		59629	Urbis	Axia 16 LED 350mA	19 Watts	5.00 Metres	Galvanised Steel	
Y	2	STREET LIGHTING	VINCENT ROAD	GRIMSBY	525792.55	406566.29	2003		59630	Urbis	Axia 16 LED 350mA	19 Watts	6.00 Metres	Galvanised Steel	
Y	3	STREET LIGHTING	VINCENT ROAD	GRIMSBY	525768.99	406556.51	2003		59631	Urbis	Axia 16 LED 350mA	19 Watts	6.00 Metres	Galvanised Steel	
Y	4	STREET LIGHTING	VINCENT ROAD	GRIMSBY	525745.4	406562.57	2003		59632	Urbis	Axia 16 LED 350mA	19 Watts	6.00 Metres	Galvanised Steel	
Y	5	STREET LIGHTING	VINCENT ROAD	GRIMSBY	525722.73	406565.22	2003		59633	Urbis	Axia 16 LED 350mA	19 Watts	6.00 Metres	Galvanised Steel	
Y	6	STREET LIGHTING	VINCENT ROAD	GRIMSBY				30/05/2025	70216	Urbis	Axia 16 LED 350mA	19 Watts	6.00 Metres	Galvanised Steel	
Y	7	STREET LIGHTING	VINCENT ROAD	GRIMSBY	525664.72	406556.07	2004		59635	Urbis	Axia 16 LED 350mA	19 Watts	6.00 Metres	Stainless Steel	
Y	8	STREET LIGHTING	VINCENT ROAD	GRIMSBY	525640.59	406548.64	2004		59636	Urbis	Axia 16 LED 350mA	19 Watts	6.00 Metres	Stainless Steel	
Y	9	STREET LIGHTING	VINCENT ROAD	GRIMSBY	525603.52	406557.84	2004		59637	Urbis	Axia 16 LED 350mA	19 Watts	6.00 Metres	Stainless Steel	
Y	1	STREET LIGHTING	WALSH GARDENS	GRIMSBY	525638.2	406566.38	2004		59746	Urbis	Axia 16 LED 350mA	19 Watts	6.00 Metres	Stainless Steel	
Y	2	STREET LIGHTING	WALSH GARDENS	GRIMSBY	525637.61	406593.45	2004		59747	Urbis	Axia 16 LED 350mA	19 Watts	6.00 Metres	Stainless Steel	
Y	3	STREET LIGHTING	WALSH GARDENS	GRIMSBY	525638.17	406622.71	2004		66293	Urbis	Axia 16 LED 350mA	19 Watts	6.00 Metres	Stainless Steel	
Y	1	STREET LIGHTING	LANCASTER COURT	GRIMSBY	525701.14	406571.22	2003		52227	Urbis	Axia 16 LED 350mA	19 Watts	6.00 Metres	Galvanised Steel	
Y	2	STREET LIGHTING	LANCASTER COURT	GRIMSBY	525708.43	406601.91	2003		52228	Urbis	Axia 16 LED 350mA	19 Watts	6.00 Metres	Galvanised Steel	
Y	1	STREET LIGHTING	GILL COURT	GRIMSBY	525761.16	406571.07	2003		49268	1 Urbis LED	Axia 16 LED 500mA	28 Watts	6.00 Metres	Galvanised Steel	
Y	2	STREET LIGHTING	GILL COURT	GRIMSBY	525772.27	406596.93	2003		49269	1 Urbis LED	Axia 16 LED 500mA	28 Watts	6.00 Metres	Galvanised Steel	
Y	1	STREET LIGHTING	PATCHETT CLOSE	GRIMSBY	525617.85	406540.49	2004		54763	1 Urbis LED	Axia 16 LED 500mA	28 Watts	6.00 Metres	Stainless Steel	
Y	2	STREET LIGHTING	PATCHETT CLOSE	GRIMSBY	525622.77	406510.12	2004		54764	1 Urbis LED	Axia 16 LED 500mA	28 Watts	6.00 Metres	Stainless Steel	
Y	3	STREET LIGHTING	PATCHETT CLOSE	GRIMSBY	525617.7	406481.21	2004		54765	1 Urbis LED	Axia 16 LED 500mA	28 Watts	6.00 Metres	Stainless Steel	
Y	4	STREET LIGHTING	PATCHETT CLOSE	GRIMSBY	525622.27	406459.24	2004		54766	1 Urbis LED	Axia 16 LED 500mA	28 Watts	6.00 Metres	Stainless Steel	
Y	1	STREET LIGHTING	ALDRED GARDEN	GRIMSBY	525690.99	406535.64	2004		42955	Urbis	Axia 16 LED 350mA	19 Watts	6.00 Metres	Stainless Steel	
Y	2	STREET LIGHTING	ALDRED GARDEN	GRIMSBY	525682.35	406511.06	2004		42956	Urbis	Axia 16 LED 350mA	19 Watts	6.00 Metres	Stainless Steel	
Y	3	STREET LIGHTING	ALDRED GARDEN	GRIMSBY	525689.24	406497.16	2004		42957	Urbis	Axia 16 LED 350mA	19 Watts	6.00 Metres	Stainless Steel	
Y	4	STREET LIGHTING	ALDRED GARDEN	GRIMSBY	525691.06	406476.13	2004		42958	Urbis	Axia 8 LED 350mA	10 Watts	6.00 Metres	Stainless Steel	
Y	1	STREET LIGHTING	BRAY CLOSE	GRIMSBY	525755.65	406547.57	2003		44580	Urbis	Axia 16 LED 350mA	19 Watts	6.00 Metres	Galvanised Steel	
Y	2	STREET LIGHTING	BRAY CLOSE	GRIMSBY	525745.56	406528.97	2003		44581	Urbis	Axia 16 LED 350mA	19 Watts	6.00 Metres	Galvanised Steel	
Y	3	STREET LIGHTING	BRAY CLOSE	GRIMSBY	525739.36	406508.88	2003		44582	Urbis	Axia 16 LED 350mA	19 Watts	6.00 Metres	Galvanised Steel	
Y	1	STREET LIGHTING	WALLIS COURT	GRIMSBY	525771.67	406743.89	2002		59712	Urbis	Axia 16 LED 350mA	19 Watts	6.00 Metres	Galvanised Steel	
Y	2	STREET LIGHTING	WALLIS COURT	GRIMSBY	525765	406715.1	2002		59713	Urbis	Axia 16 LED 350mA	19 Watts	6.00 Metres	Galvanised Steel	
Y	3	STREET LIGHTING	WALLIS COURT	GRIMSBY	525769.6	406690.28	2002		59714	Urbis	Axia 16 LED 350mA	19 Watts	6.00 Metres	Galvanised Steel	
Y	4	STREET LIGHTING	WALLIS COURT	GRIMSBY	525755.56	406676.44	2002		59715	Urbis	Axia 16 LED 350mA	19 Watts	6.00 Metres	Galvanised Steel	
Y	5	STREET LIGHTING	WALLIS COURT	GRIMSBY	525730.2	406680.63	2002		59716	Urbis	Axia 16 LED 350mA	19 Watts	6.00 Metres	Galvanised Steel	
Y	6	STREET LIGHTING	WALLIS COURT	GRIMSBY	525718.17	406690.17	2002		59717	Urbis	Axia 16 LED 350mA	19 Watts	6.00 Metres	Galvanised Steel	
Y	1	STREET LIGHTING	MCCARTHY CLOSE	GRIMSBY	525437.14	406850.6	2006		53464	Urbis	Axia 16 LED 350mA	19 Watts	6.00 Metres	Stainless Steel	
Y	2	STREET LIGHTING	MCCARTHY CLOSE	GRIMSBY	525464.86	406855.77	2006		53465	Urbis	Axia 16 LED 350mA	19 Watts	6.00 Metres	Stainless Steel	

Y	3	STREET LIGHTING	MCCARTHY CLOSE	GRIMSBY	525477.98	406861.36	2006		53466	Urbis	Axia 16 LED 350mA	19 Watts	6.00 Metres	Stainless Steel	
Y	1	STREET LIGHTING	STOCKHAM COURT	GRIMSBY	525445.6	406785.64	2008		58493	1 Urbis LED	Axia 16 LED 500mA	28 Watts	6.00 Metres	Stainless Steel	
Y	2	STREET LIGHTING	STOCKHAM COURT	GRIMSBY	525484.68	406782.77	2008		58494	1 Urbis LED	Axia 16 LED 500mA	28 Watts	6.00 Metres	Stainless Steel	
Y	1	STREET LIGHTING	PENNISTONE PLACE	GRIMSBY	525417.21	406775.26	2006		55269	1 Urbis LED	Axia 16 LED 500mA	28 Watts	6.00 Metres	Stainless Steel	
Y	2	STREET LIGHTING	PENNISTONE PLACE	GRIMSBY	525425.45	406807.62	2008		55270	1 Urbis LED	Teceo 16 LED 500mA	28 Watts	6.00 Metres	Stainless Steel	
Y	3	STREET LIGHTING	PENNISTONE PLACE	GRIMSBY	525435.28	406827.27	2008		67499	1 Urbis LED	Axia 16 LED 500mA	28 Watts	6.00 Metres	Stainless Steel	
Y	4	STREET LIGHTING	PENNISTONE PLACE	GRIMSBY	525398.79	406824.6	2008		55271	1 Urbis LED	Axia 16 LED 500mA	28 Watts	6.00 Metres	Stainless Steel	
Y	5	STREET LIGHTING	PENNISTONE PLACE	GRIMSBY	525377.82	406835.51	2008		55272	1 Urbis LED	Axia 16 LED 500mA	28 Watts	6.00 Metres	Stainless Steel	
Y	6	STREET LIGHTING	PENNISTONE PLACE	GRIMSBY	525361.11	406846.96	2008		55273	1 Urbis LED	Axia 16 LED 500mA	28 Watts	6.00 Metres	Stainless Steel	
Y	7	STREET LIGHTING	PENNISTONE PLACE	GRIMSBY	525321.47	406849.9	2008		55274	1 Urbis LED	Axia 16 LED 500mA	28 Watts	6.00 Metres	Stainless Steel	
Y	8	STREET LIGHTING	PENNISTONE PLACE	GRIMSBY	525345.61	406834.97	2009		55275	1 Urbis LED	Axia 16 LED 500mA	28 Watts	6.00 Metres	Steel	
Y	9	STREET LIGHTING	PENNISTONE PLACE	GRIMSBY	525345.53	406803.05	2009		55276	1 Urbis LED	Axia 16 LED 500mA	28 Watts	6.00 Metres	Steel	
Y	10	STREET LIGHTING	PENNISTONE PLACE	GRIMSBY	525346.33	406768.41	2009		55277	1 Urbis LED	Axia 16 LED 500mA	28 Watts	6.00 Metres	Steel	
Y	1	STREET LIGHTING	FOOTPATH BETWEEN WALLIS COURT	GRIMSBY	525785.22	406690.52	2002		48788	Urbis	Axia 8 LED 350mA	10 Watts	5.00 Metres	Galvanised Steel	
Y	2	STREET LIGHTING	FOOTPATH BETWEEN WALLIS COURT	GRIMSBY	525690.62	406681.64	2002		48789	Urbis	Axia 8 LED 350mA	10 Watts	5.00 Metres	Galvanised Steel	
Y	1	STREET LIGHTING	CASPIAN CRESCENT	GRIMSBY	525447.97	406651.41	2006		45417	1 Urbis LED	Axia 16 LED 500mA	28 Watts	6.00 Metres	Stainless Steel	
Y	2	STREET LIGHTING	CASPIAN CRESCENT	GRIMSBY	525442.29	406675.8	2006		45418	1 Urbis LED	Axia 16 LED 500mA	28 Watts	6.00 Metres	Stainless Steel	
Y	3	STREET LIGHTING	CASPIAN CRESCENT	GRIMSBY	525437.24	406699.65	2006		45419	1 Urbis LED	Axia 16 LED 500mA	28 Watts	6.00 Metres	Stainless Steel	
Y	4	STREET LIGHTING	CASPIAN CRESCENT	GRIMSBY	525440.29	406729.96	2006		45420	1 Urbis LED	Axia 16 LED 500mA	28 Watts	6.00 Metres	Stainless Steel	
Y	5	STREET LIGHTING	CASPIAN CRESCENT	GRIMSBY	525416.23	406749.85	2006		45421	1 Urbis LED	Axia 16 LED 500mA	28 Watts	6.00 Metres	Stainless Steel	
Y	6	STREET LIGHTING	CASPIAN CRESCENT	GRIMSBY	525394.76	406772.57	2010		45422	1 Urbis LED	Axia 16 LED 500mA	28 Watts	6.00 Metres	Steel	
Y	7	STREET LIGHTING	CASPIAN CRESCENT	GRIMSBY	525364.05	406771.25	2010		45423	1 Urbis LED	Axia 16 LED 500mA	28 Watts	6.00 Metres	Steel	
Y	8	STREET LIGHTING	CASPIAN CRESCENT	GRIMSBY	525345.05	406750.41	2009		45424	1 Urbis LED	Axia 16 LED 500mA	28 Watts	6.00 Metres	Steel	
Y	9	STREET LIGHTING	CASPIAN CRESCENT	GRIMSBY	525323.69	406732.94	2009		45425	1 Urbis LED	Axia 16 LED 500mA	28 Watts	6.00 Metres	Steel	
Y	10	STREET LIGHTING	CASPIAN CRESCENT	GRIMSBY	525334.08	406702.7	2009		45426	1 Urbis LED	Axia 16 LED 500mA	28 Watts	6.00 Metres	Steel	
Y	11	STREET LIGHTING	CASPIAN CRESCENT	GRIMSBY	525342.21	406663.67	2009		45427	1 Urbis LED	Axia 16 LED 500mA	28 Watts	6.00 Metres	Steel	
Y	12	STREET LIGHTING	CASPIAN CRESCENT	GRIMSBY	525339.29	406629.14	2009		45428	1 Urbis LED	Axia 16 LED 500mA	28 Watts	6.00 Metres	Steel	
Y	13	STREET LIGHTING	CASPIAN CRESCENT	GRIMSBY	525354.9	406606.14	2009		45429	1 Urbis LED	Axia 16 LED 500mA	28 Watts	6.00 Metres	Steel	
Y	14	STREET LIGHTING	CASPIAN CRESCENT	GRIMSBY	525389.57	406588.51	2009		45430	1 Urbis LED	Axia 16 LED 500mA	28 Watts	6.00 Metres	Steel	
Y	1	STREET LIGHTING	LANCER COURT	GRIMSBY	525357.74	406676.39	2009		52229	Urbis	Axia 16 LED 350mA	19 Watts	6.00 Metres	Steel	
Y	2	STREET LIGHTING	LANCER COURT	GRIMSBY	525385.64	406684.49	2009		52230	Urbis	Axia 16 LED 350mA	19 Watts	6.00 Metres	Steel	
Y	3	STREET LIGHTING	LANCER COURT	GRIMSBY	525387.4	406713.39	2009		52231	Urbis	Axia 16 LED 350mA	19 Watts	6.00 Metres	Steel	
Y	11	STREET LIGHTING	PAYNTER WALK	GRIMSBY	525430.84	406667.3	2009		54811	Urbis	Axia 16 LED 350mA	19 Watts	6.00 Metres	Galvanised Steel	
Y	12	STREET LIGHTING	PAYNTER WALK	GRIMSBY	525400.13	406666.07	2009		54812	Urbis	Axia 16 LED 350mA	19 Watts	6.00 Metres	Galvanised Steel	
Y	13	STREET LIGHTING	PAYNTER WALK	GRIMSBY	525367.45	406664.28	2009		54813	Urbis	Axia 16 LED 350mA	19 Watts	6.00 Metres	Galvanised Steel	
Y	1	STREET LIGHTING	SHELDON ROAD	GRIMSBY	525331.2	406786.94	2009		57116	1 Urbis LED	Axia 16 LED 500mA	28 Watts	6.00 Metres	Steel	
Y	2	STREET LIGHTING	SHELDON ROAD	GRIMSBY	525308.59	406785.41	2010		57117	1 Urbis LED	Axia 16 LED 500mA	28 Watts	6.00 Metres	Steel	
Y	3	STREET LIGHTING	SHELDON ROAD	GRIMSBY	525287.34	406782.73	2011		57118	1 Urbis LED	Axia 16 LED 500mA	28 Watts	6.00 Metres	Steel	
Y	4	STREET LIGHTING	SHELDON ROAD	GRIMSBY	525278.7	406793.39	2011		57119	1 Urbis LED	Axia 16 LED 500mA	28 Watts	6.00 Metres	Steel	
Y	5	STREET LIGHTING	SHELDON ROAD	GRIMSBY	525255.61	406802.04	2011		57120	1 Urbis LED	Axia 16 LED 500mA	28 Watts	6.00 Metres	Steel	
Y	6	STREET LIGHTING	SHELDON ROAD	GRIMSBY	525253.76	406828.83	2011		57121	1 Urbis LED	Axia 16 LED 500mA	28 Watts	6.00 Metres	Steel	
Y	7	STREET LIGHTING	SHELDON ROAD	GRIMSBY	525250.15	406848.14	2011		57122	1 Urbis LED	Axia 16 LED 500mA	28 Watts	6.00 Metres	Steel	
Y	8	STREET LIGHTING	SHELDON ROAD	GRIMSBY	525229.07	406845.28	2011		57123	1 Urbis LED	Axia 16 LED 500mA	28 Watts	6.00 Metres	Steel	
Y	9	STREET LIGHTING	SHELDON ROAD	GRIMSBY	525200.44	406843.51	2013		63001	1 Urbis LED	Axia 16 LED 500mA	28 Watts	6.00 Metres	Galvanised Steel	
Y	10	STREET LIGHTING	SHELDON ROAD	GRIMSBY	525165.44	406841.27	2013		63002	1 Urbis LED	Axia 16 LED 500mA	28 Watts	6.00 Metres	Galvanised Steel	
Y	11	STREET LIGHTING	SHELDON ROAD	GRIMSBY	525136.33	406828.81	2019	14/06/2019	67378	Urbis	Axia 16 LED 500mA	28 Watts	6.00 Metres	Galvanised Steel	
Y	12	STREET LIGHTING	SHELDON ROAD	GRIMSBY	525121.97	406809.11	2014		66393	1 Urbis LED	Axia 16 LED 500mA	28 Watts	6.00 Metres	Galvanised Steel	
Y	13	STREET LIGHTING	SHELDON ROAD	GRIMSBY	525088.48	406813.62	2014		66394	1 Urbis LED	Axia 16 LED 500mA	28 Watts	6.00 Metres	Galvanised Steel	
Y	14	STREET LIGHTING	SHELDON ROAD	GRIMSBY	525074.13	406839.22	2014		66395	1 Urbis LED	Axia 16 LED 500mA	28 Watts	6.00 Metres	Galvanised Steel	
Y	15	STREET LIGHTING	SHELDON ROAD	GRIMSBY	525069.91	406806.71	2014		66396	1 Urbis LED	Axia 16 LED 500mA	28 Watts	6.00 Metres	Galvanised Steel	
Y	16	STREET LIGHTING	SHELDON ROAD	GRIMSBY	525108.41	406810.03	2019	14/06/2019	67379	Urbis	Axia 16 LED 500mA	28 Watts	6.00 Metres	Galvanised Steel	
Y	17	STREET LIGHTING	SHELDON ROAD	GRIMSBY	525083.6	406758.96	2014		67335	1 Urbis LED	Axia 16 LED 500mA	28 Watts	6.00 Metres	Galvanised Steel	
Y	18	STREET LIGHTING	SHELDON ROAD	GRIMSBY	525073.87	406728.57	2014		67336	1 Urbis LED	Axia 16 LED 500mA	28 Watts	6.00 Metres	Galvanised Steel	
Y	19	STREET LIGHTING	SHELDON ROAD	GRIMSBY	525071.58	406704.47	2014		67337	1 Urbis LED	Axia 16 LED 500mA	28 Watts	6.00 Metres	Galvanised Steel	
Y	1	STREET LIGHTING	RINOVIA DRIVE	GRIMSBY	525297.06	406726.47	2011		56110	1 Urbis LED	Axia 16 LED 500mA	28 Watts	6.00 Metres	Steel	
Y	2	STREET LIGHTING	RINOVIA DRIVE	GRIMSBY	525261.36	406743.69	2011		56111	1 Urbis LED	Axia 16 LED 500mA	28 Watts	6.00 Metres	Steel	
Y	3	STREET LIGHTING	RINOVIA DRIVE	GRIMSBY	525246.24	406755.75	2019	14/06/2019	67377	Urbis	Axia 16 LED 500mA	28 Watts	6.00 Metres	Galvanised Steel	
Y	4	STREET LIGHTING	RINOVIA DRIVE	GRIMSBY	525224.48	406767.79	2011		56113	1 Urbis LED	Axia 16 LED 500mA	28 Watts	6.00 Metres	Steel	
Y	5	STREET LIGHTING	RINOVIA DRIVE	GRIMSBY	525199.11	406761.96	2013		63006	1 Urbis LED	Axia 16 LED 500mA	28 Watts	6.00 Metres	Galvanised Steel	
Y	6	STREET LIGHTING	RINOVIA DRIVE	GRIMSBY	525172.5	406769.1	2013		67331	1 Urbis LED	Axia 16 LED 500mA	28 Watts	6.00 Metres	Galvanised Steel	
Y	7	STREET LIGHTING	RINOVIA DRIVE	GRIMSBY	525152.03	406767.78	2013		67332	1 Urbis LED	Axia 16 LED 500mA	28 Watts	6.00 Metres	Galvanised Steel	
Y	8	STREET LIGHTING	RINOVIA DRIVE	GRIMSBY	525132.22	406760.16	2013		67333	1 Urbis LED	Axia 16 LED 500mA	28 Watts	6.00 Metres	Galvanised Steel	
Y	9	STREET LIGHTING	RINOVIA DRIVE	GRIMSBY	525106.61	406761.37	2013		67334	1 Urbis LED	Axia 16 LED 500mA	28 Watts	6.00 Metres	Galvanised Steel	
Y	1	STREET LIGHTING	FORD CLOSE	GRIMSBY	525124.97	406734.55	2013		67338	Urbis	Axia 16 LED 350mA	19 Watts	6.00 Metres	Galvanised Steel	
Y	2	STREET LIGHTING	FORD CLOSE	GRIMSBY	525127.33	406706.83	2013		67339	Urbis	Axia 16 LED 350mA	19 Watts	6.00 Metres	Galvanised Steel	
Y	3	STREET LIGHTING	FORD CLOSE	GRIMSBY	525136.63	406673.24	2013		67340	Urbis	Axia 16 LED 350mA	19 Watts	6.00 Metres	Galvanised Steel	
Y	1	STREET LIGHTING	SPALL CLOSE	GRIMSBY	525243.25	406726.15	2011		66398	1 Urbis LED	Axia 16 LED 500mA	28 Watts	6.00 Metres	Steel	
Y	2	STREET LIGHTING	SPALL CLOSE	GRIMSBY	525244.69	406698.84	2011		57444	1 Urbis LED	Axia 16 LED 500mA	28 Watts	6.00 Metres	Steel	
Y	3	STREET LIGHTING	SPALL CLOSE	GRIMSBY	525241.61	406670.75	2011		57445	1 Urbis LED	Axia 16 LED 500mA	28 Watts	6.00 Metres	Steel	
Y	4	STREET LIGHTING	SPALL CLOSE	GRIMSBY	525216.67	406709.39	2011		66399	1 Urbis LED	Axia 16 LED 500mA	28 Watts	6.00 Metres	Steel	
Y	5	STREET LIGHTING	SPALL CLOSE	GRIMSBY	525188.67	406701.05	2011		66400	1 Urbis LED	Axia 16 LED 500mA	28 Watts	6.00 Metres	Steel	
Y	1	STREET LIGHTING	ESTHER WAY	GRIMSBY	525199.75	406790.97	2013		63004	1 Urbis LED	Axia 16 LED 500mA	28 Watts	6.00 Metres	Steel	
Y	2	STREET LIGHTING	ESTHER WAY	GRIMSBY	525205.49	406820.09	2013		63005	Urbis	Axia 16 LED 350mA	19 Watts	6.00 Metres	Galvanised Steel	
Y	5	STREET LIGHTING	EDINBURGH WAY	GRIMSBY	525840.11	406337.43	2017	31/03/2017	68955	Urbis	Axia 16 LED 350mA	19 Watts	6.00 Metres	Steel	
Y	6	STREET LIGHTING	EDINBURGH WAY	GRIMSBY	525864.23	406340.62	2017	31/03/2017	68956	Urbis	Axia 16 LED 350mA	19 Watts	6.00 Metres	Steel	
Y	7	STREET LIGHTING	EDINBURGH WAY	GRIMSBY	525888.07	406360.44	2017	31/03/2017	68957	Urbis	Axia 16 LED 350mA	19 Watts	6.00 Metres	Steel	
Y	8	STREET LIGHTING	EDINBURGH WAY	GRIMSBY	525909.69	406359.21	2017	31/03/2017	68958	Urbis	Axia 16 LED 350mA	19 Watts	6.00 Metres	Steel	
Y	9	STREET LIGHTING	EDINBURGH WAY	GRIMSBY	525906.23	406334.38	2017	31/03/2017	68959	Urbis	Axia 16 LED 350mA	19 Watts	6.00 Metres	Steel	
Y	1	STREET LIGHTING	PASTURE LANE	GRIMSBY	525857.44	406328.98	2017	31/03/2017	68942	Urbis	Axia 16 LED 350mA	19 Watts	6.00 Metres	Steel	
Y	2	STREET LIGHTING	PASTURE LANE	GRIMSBY	525864.23	406302.51	2017	31/03/2017	68943	Urbis	Axia 16 LED 350mA	19 Watts	6.00 Metres	Steel	
Y	3	STREET LIGHTING	PASTURE LANE	GRIMSBY	525891.67	406314.84	2017	31/03/2017	68944	Urbis	Axia 16 LED 350mA	19 Watts	6.00 Metres	Steel	
Y	4	STREET LIGHTING	PASTURE LANE	GRIMSBY	525927.58	406336.74	2017	31/03/2017	68945	Urbis	Axia 16 LED 350mA	19 Watts	6.00 Metres	Steel	
Y	5	STREET LIGHTING	PASTURE LANE	GRIMSBY	525953.63	406355.73	2017	31/03/2017	68946	Urbis	Axia 16 LED 350mA	19 Watts	6.00 Metres	Steel	
Y	6	STREET LIGHTING	PASTURE LANE	GRIMSBY	525956.96	406378.61	2017	31/03/2017	68947	Urbis	Axia 16 LED 350mA	19 Watts	6.00 Metres	Steel	
Y	7	STREET LIGHTING	PASTURE LANE	GRIMSBY	525966.81	406408.68	2017	31/03/2017	68948	Urbis	Axia 16 LED 350mA	19 Watts	6.00 Metres	Steel	
Y	8	STREET LIGHTING	PASTURE LANE	GRIMSBY	525960.71	406443.33	2017	31/03/2017	68949	Urbis	Axia 16 LED 350mA	19 Watts	6.00 Metres	Steel	
Y	9	STREET LIGHTING	PASTURE LANE	GRIMSBY	525991.75	406463.29	2017	31/03/2017	68950	Urbis	Axia 16 LED 350mA	19 Watts	6.00 Metres	Steel	
Y	10	STREET LIGHTING	PASTURE LANE	GRIMSBY	525968.47	406471.89	2017	31/03/2017	68951	Urbis	Axia 16 LED 350mA	19 Watts	6.00 Metres	Steel	
Y	11	STREET LIGHTING	PASTURE LANE	GRIMSBY	525950.86	406492.41	2017	31/03/2017	68952	Urbis	Axia 16 LED 350mA	19 Watts	6.00 Metres	Steel	
Y	12	STREET LIGHTING	PASTURE LANE	GRIMSBY	525917.32	406489.35	2017	31/03/2017	68953	Urbis	Axia 16 LED 350mA	19 Watts	6.00 Metres	Steel	
Y	13	STREET LIGHTING	PASTURE LANE	GRIMSBY	525883.47	406480.69	2009		54737	1 Urbis LED	Axia 16 LED 500mA	28 Watts	6.00 Metres	Steel	
Y	14	STREET LIGHTING	PASTURE LANE	GRIMSBY	525860.16	406464.21	2009		54736	1 Urbis LED	Axia 16 LED 500mA	28 Watts	6.00 Metres	Steel	
Y	15	STREET LIGHTING	PASTURE LANE	GRIMSBY	525837.64	406457.3	2009		54735	1 Urbis LED	Axia 16 LED 500mA	28 Watts	6.00 Metres	Steel	
Y	1	STREET LIGHTING	HARROW LANE	GRIMSBY	525827.92	406441.04	2009	01/04/2009	50280	Urbis	Axia 16 LED 350mA	19 Watts	6.00 Metres	Steel	
Y	2	STREET LIGHTING	HARROW LANE	GRIMSBY	525846.96	406418.77	2009	01/04/2009	50281	Urbis	Axia 16 LED 350mA	19 Watts	6.00 Metres	Steel	
Y	3	STREET LIGHTING	HARROW LANE	GRIMSBY	525852.86	406388.58	2017	31/03/2017	68936	Urbis	Teceo 16 LED 500mA	25 Watts	6.00 Metres	Steel	
Y	4	STREET LIGHTING	HARROW LANE	GRIMSBY	525882.11	406400.92	2017	31/03/2017	68937	Urbis	Axia 16 LED 350mA	19 Watts	6.00 Metres	Steel	
Y	5	STREET LIGHTING	HARROW LANE	GRIMSBY	525913.31	406395.11	2017	31/03/2017	68938	Urbis	Axia 16 LED 350mA	19 Watts	6.00 Metres	Steel	
Y	6	STREET LIGHTING	HARROW LANE	GRIMSBY	525897.08	406423.93	2017	31/03/2017	68939	Urbis	Axia 16 LED 350mA	19 Watts	6.00 Metres	Steel	
Y	7	STREET LIGHTING	HARROW LANE	GRIMSBY	525928.68	406418.94	2017	31/03/2017	68940	Urbis	Axia 16 LED 350mA	19 Watts	6.00 Metres	Steel	
Y	8	STREET LIGHTING	HARROW LANE	GRIMSBY	525952.79	406421.51	2017	31/03/2017	68941	Urbis	Axia 16 LED 350mA	19 Watts	6.00 Metres	Steel	
Y	1	STREET LIGHTING	TILLERING LANE	GRIMSBY	525899.71	406381.24	2017	31/03/2017	68954	Urbis	Axia 16 LED 350mA	19 Watts	6.00 Metres	Steel	
Y	1	STREET LIGHTING	MATTHEW TELFORD PARK	GRIMSBY	526469.93	406669.22	1993		56647	1 Urbis LED	Teceo 48 LED 500mA	79 Watts	10.00 Metres	Galvanised Steel	
Y	2	STREET LIGHTING	MATTHEW TELFORD PARK	GRIMSBY	526463.35	406649.73	1993		56648	1 Urbis LED	Teceo 48 LED 500mA	79 Watts	10.00 Metres	Galvanised Steel	
Y	3	STREET LIGHTING	MATTHEW TELFORD PARK	GRIMSBY	526435	406674.41	1993		56649	1 Urbis LED	Teceo 48 LED 500mA	79 Watts	8.00 Metres	Galvanised Steel	
Y	4	STREET LIGHTING	MATTHEW TELFORD PARK	GRIMSBY	526406.39	406659.48	1993		56650	1 Urbis LED	Teceo 48 LED 500mA	79 Watts	8.00 Metres	Galvanised Steel	
Y	5	STREET LIGHTING	MATTHEW TELFORD PARK	GRIMSBY	526385.13	406664.98	1993		56651	1 Urbis LED	Teceo 48 LED 500mA	79 Watts	8.00 Metres	Galvanised Steel	
Y	6	STREET LIGHTING	MATTHEW TELFORD PARK	GRIMSBY	526364.49	406648.4	2008		56652	1 Urbis LED	Teceo 48 LED 500mA	79 Watts	8.00 Metres	Steel	
Y	7	STREET LIGHTING	MATTHEW TELFORD PARK	GRIMSBY	526341	406642	1996		56653	1 Urbis LED	Teceo 48 LED 500mA	79 Watts	8.00 Metres	Galvanised Steel	
Y	8	STREET LIGHTING	MATTHEW TELFORD PARK	GRIMSBY	526324.02	406636.85	2021	13/08/2021	68624	Urbis	mpera Maxi 128 LED 700m	277 Watts	8.00 Metres	Galvanised Steel	

Y	9	STREET LIGHTING	MATTHEW TELFORD PARK	GRIMSBY	526300.34	406631.31	1996		56655	1 Urbis LED	Teceo 48 LED 500mA	79 Watts	8.00 Metres	Galvanised Steel	
Y	10	STREET LIGHTING	MATTHEW TELFORD PARK	GRIMSBY	526279.89	406631.82	1996		56656	1 Urbis LED	Teceo 48 LED 500mA	79 Watts	8.00 Metres	Galvanised Steel	
Y	11	STREET LIGHTING	MATTHEW TELFORD PARK	GRIMSBY	526259.03	406635.97	2007		56657	1 Urbis LED	Teceo 48 LED 500mA	79 Watts	8.00 Metres	Steel	
Y	12	STREET LIGHTING	MATTHEW TELFORD PARK	GRIMSBY	526243.03	406653.09	1996		56658	1 Urbis LED	Teceo 48 LED 500mA	79 Watts	8.00 Metres	Galvanised Steel	
Y	13	STREET LIGHTING	MATTHEW TELFORD PARK	GRIMSBY	526224.41	406649.85	2022	29/06/2022	67778	Urbis	mpera Maxi 128 LED 700m	277 Watts	8.00 Metres	Galvanised Steel	
Y	14	STREET LIGHTING	MATTHEW TELFORD PARK	GRIMSBY	526200.9	406666.76	1996		56660	1 Urbis LED	Teceo 48 LED 500mA	79 Watts	8.00 Metres	Galvanised Steel	
Y	15	STREET LIGHTING	MATTHEW TELFORD PARK	GRIMSBY	526179.38	406657.54	1996		56661	1 Urbis LED	Teceo 48 LED 500mA	79 Watts	8.00 Metres	Galvanised Steel	
Y	16	STREET LIGHTING	MATTHEW TELFORD PARK	GRIMSBY	526155.59	406655.14	1996		56662	1 Urbis LED	Teceo 48 LED 500mA	79 Watts	8.00 Metres	Galvanised Steel	
Y	17	STREET LIGHTING	MATTHEW TELFORD PARK	GRIMSBY	526134.07	406661.72	1996		56663	1 Urbis LED	Teceo 48 LED 500mA	79 Watts	8.00 Metres	Galvanised Steel	
Y	18	STREET LIGHTING	MATTHEW TELFORD PARK	GRIMSBY	526117.87	406645.77	1996		56664	1 Urbis LED	Teceo 48 LED 500mA	79 Watts	8.00 Metres	Galvanised Steel	
Y	19	STREET LIGHTING	MATTHEW TELFORD PARK	GRIMSBY	526095.69	406638.59	1996		56665	1 Urbis LED	Teceo 48 LED 500mA	79 Watts	8.00 Metres	Galvanised Steel	
Y	20	STREET LIGHTING	MATTHEW TELFORD PARK	GRIMSBY	526066.23	406641.16	1996		56666	1 Urbis LED	Teceo 48 LED 500mA	79 Watts	8.00 Metres	Galvanised Steel	
Y	21	STREET LIGHTING	MATTHEW TELFORD PARK	GRIMSBY	526045.24	406623.67	1996		56667	1 Urbis LED	Teceo 48 LED 500mA	79 Watts	8.00 Metres	Galvanised Steel	
Y	22	STREET LIGHTING	MATTHEW TELFORD PARK	GRIMSBY	526020.57	406616.95	1998		56668	1 Urbis LED	Teceo 48 LED 500mA	79 Watts	8.00 Metres	Galvanised Steel	
Y	23	STREET LIGHTING	MATTHEW TELFORD PARK	GRIMSBY	525998.28	406611.8	2022	10/01/2022	68807	Urbis	Teceo 48 LED 500mA	79 Watts	8.00 Metres	Galvanised Steel	
Y	24	STREET LIGHTING	MATTHEW TELFORD PARK	GRIMSBY	525970.38	406617.66	1998		56670	1 Urbis LED	Teceo 48 LED 500mA	79 Watts	8.00 Metres	Galvanised Steel	
Y	25	STREET LIGHTING	MATTHEW TELFORD PARK	GRIMSBY	525945.31	406608.36	1998		56671	1 Urbis LED	Teceo 48 LED 500mA	79 Watts	8.00 Metres	Galvanised Steel	
Y	26	STREET LIGHTING	MATTHEW TELFORD PARK	GRIMSBY	525917.64	406610.86	1998		56672	1 Urbis LED	Teceo 48 LED 500mA	79 Watts	8.00 Metres	Galvanised Steel	
Y	27	STREET LIGHTING	MATTHEW TELFORD PARK	GRIMSBY	525896.1	406623.54	1998		56673	1 Urbis LED	Teceo 48 LED 500mA	79 Watts	8.00 Metres	Galvanised Steel	
Y	28	STREET LIGHTING	MATTHEW TELFORD PARK	GRIMSBY	525870.36	406618.45	2001		56674	1 Urbis LED	Teceo 48 LED 500mA	79 Watts	8.00 Metres	Galvanised Steel	
Y	29	STREET LIGHTING	MATTHEW TELFORD PARK	GRIMSBY	525846.82	406631.64	2001		56675	1 Urbis LED	Teceo 48 LED 500mA	79 Watts	8.00 Metres	Galvanised Steel	
Y	30	STREET LIGHTING	MATTHEW TELFORD PARK	GRIMSBY	525822.77	406621.29	2001		56676	1 Urbis LED	Teceo 48 LED 500mA	79 Watts	8.00 Metres	Galvanised Steel	
Y	31	STREET LIGHTING	MATTHEW TELFORD PARK	GRIMSBY	525798.1	406633.06	1999		56677	1 Urbis LED	Teceo 48 LED 500mA	79 Watts	8.00 Metres	Galvanised Steel	
Y	32	STREET LIGHTING	MATTHEW TELFORD PARK	GRIMSBY	525769.27	406624.35	2001		56678	1 Urbis LED	Teceo 48 LED 500mA	79 Watts	8.00 Metres	Galvanised Steel	
Y	33	STREET LIGHTING	MATTHEW TELFORD PARK	GRIMSBY	525749.95	406627	2001		56679	1 Urbis LED	Teceo 48 LED 500mA	79 Watts	8.00 Metres	Galvanised Steel	
Y	34	STREET LIGHTING	MATTHEW TELFORD PARK	GRIMSBY	525727.82	406630.01	2001		56680	1 Urbis LED	Teceo 48 LED 500mA	79 Watts	8.00 Metres	Galvanised Steel	
Y	35	STREET LIGHTING	MATTHEW TELFORD PARK	GRIMSBY	525705.34	406643.12	1999		56681	1 Urbis LED	Teceo 48 LED 500mA	79 Watts	8.00 Metres	Galvanised Steel	
Y	36	STREET LIGHTING	MATTHEW TELFORD PARK	GRIMSBY	525676.48	406646.91	1999		56682	1 Urbis LED	Teceo 48 LED 500mA	79 Watts	8.00 Metres	Galvanised Steel	
Y	37	STREET LIGHTING	MATTHEW TELFORD PARK	GRIMSBY	525663.55	406636.37	2001		56683	1 Urbis LED	Teceo 48 LED 500mA	79 Watts	8.00 Metres	Galvanised Steel	
Y	38	STREET LIGHTING	MATTHEW TELFORD PARK	GRIMSBY	525628.97	406636.52	2009		56684	1 Urbis LED	Teceo 48 LED 500mA	79 Watts	8.00 Metres	Steel	
Y	39	STREET LIGHTING	MATTHEW TELFORD PARK	GRIMSBY	525593.85	406637.2	2009		56685	1 Urbis LED	Teceo 48 LED 500mA	79 Watts	8.00 Metres	Steel	
Y	40	STREET LIGHTING	MATTHEW TELFORD PARK	GRIMSBY	525561.47	406637.64	2009		56686	1 Urbis LED	Teceo 48 LED 500mA	79 Watts	8.00 Metres	Steel	
Y	41	STREET LIGHTING	MATTHEW TELFORD PARK	GRIMSBY	525527.78	406638.83	2009		56687	1 Urbis LED	Teceo 48 LED 500mA	79 Watts	8.00 Metres	Steel	
Y	42	STREET LIGHTING	MATTHEW TELFORD PARK	GRIMSBY	525495.58	406639.54	2009		56688	1 Urbis LED	Teceo 48 LED 500mA	79 Watts	8.00 Metres	Steel	
Y	43	STREET LIGHTING	MATTHEW TELFORD PARK	GRIMSBY	525464.89	406630	2009		56689	1 Urbis LED	Teceo 48 LED 500mA	79 Watts	8.00 Metres	Steel	
Y	44	STREET LIGHTING	MATTHEW TELFORD PARK	GRIMSBY	525435.05	406624.86	2009		56691	1 Urbis LED	Teceo 32 LED 500mA	52 Watts	6.00 Metres	Galvanised Steel	
Y	45	STREET LIGHTING	MATTHEW TELFORD PARK	GRIMSBY	525440.21	406611.76	2009		56690	1 Urbis LED	Teceo 48 LED 500mA	79 Watts	8.00 Metres	Steel	
Y	46	STREET LIGHTING	MATTHEW TELFORD PARK	GRIMSBY	525414.74	406603.75	2009		56692	1 Urbis LED	Teceo 32 LED 500mA	52 Watts	6.00 Metres	Galvanised Steel	
Y	47	STREET LIGHTING	MATTHEW TELFORD PARK	GRIMSBY	525418.76	406586.06	2018	05/06/2018	68189	1 Urbis LED	Teceo 48 LED 500mA	79 Watts	8.00 Metres	Steel	
Y	48	STREET LIGHTING	MATTHEW TELFORD PARK	GRIMSBY	525385.44	406576.19	2009		56693	1 Urbis LED	Teceo 32 LED 500mA	52 Watts	6.00 Metres	Galvanised Steel	
Y	49	STREET LIGHTING	MATTHEW TELFORD PARK	GRIMSBY	525394.98	406558.42	2018	05/06/2018	68188	1 Urbis LED	Teceo 48 LED 500mA	79 Watts	8.00 Metres	Steel	
Y	1	STREET LIGHTING	BROCK CLOSE	GRIMSBY	526048.28	406857.19	1997		44797	Urbis	Axia 16 LED 350mA	19 Watts	5.00 Metres	Galvanised Steel	
Y	2	STREET LIGHTING	BROCK CLOSE	GRIMSBY	526071.95	406845.54	1997		44798	Urbis	Axia 16 LED 350mA	19 Watts	5.00 Metres	Galvanised Steel	
Y	1	STREET LIGHTING	EASON ROAD	GRIMSBY	525975.65	406594.87	1996		47713	Urbis	Axia 16 LED 350mA	19 Watts	5.00 Metres	Galvanised Steel	
Y	2	STREET LIGHTING	EASON ROAD	GRIMSBY	525971.43	406567.42	1996		47714	Urbis	Axia 16 LED 350mA	19 Watts	5.00 Metres	Galvanised Steel	
Y	1	STREET LIGHTING	FINSBURY DRIVE	GRIMSBY	525909.67	406630.92	1997		48582	1 Urbis LED	Axia 16 LED 500mA	28 Watts	5.00 Metres	Galvanised Steel	
Y	2	STREET LIGHTING	FINSBURY DRIVE	GRIMSBY	525919.29	406654.47	1997		48583	1 Urbis LED	Axia 16 LED 500mA	28 Watts	5.00 Metres	Galvanised Steel	
Y	3	STREET LIGHTING	FINSBURY DRIVE	GRIMSBY	525913.34	406684.53	1997		48584	1 Urbis LED	Axia 16 LED 500mA	28 Watts	5.00 Metres	Galvanised Steel	
Y	1	STREET LIGHTING	FULHAM PARK	GRIMSBY	525686.28	406776.44	1998		49049	1 Urbis LED	Axia 16 LED 500mA	28 Watts	5.00 Metres	Galvanised Steel	
Y	2	STREET LIGHTING	FULHAM PARK	GRIMSBY	525677.55	406805.11	1998		49050	1 Urbis LED	Axia 16 LED 500mA	28 Watts	5.00 Metres	Galvanised Steel	
Y	1	STREET LIGHTING	HEIMDALL ROAD	GRIMSBY	526016.08	406798.43	1993		50466	Urbis	Axia 16 LED 350mA	19 Watts	6.00 Metres	Galvanised Steel	
Y	2	STREET LIGHTING	HEIMDALL ROAD	GRIMSBY	526027.6	406811.6	1993		50467	Urbis	Axia 16 LED 350mA	19 Watts	6.00 Metres	Galvanised Steel	
Y	3	STREET LIGHTING	HEIMDALL ROAD	GRIMSBY	526031.02	406833.69	1993		50468	Urbis	Axia 16 LED 350mA	19 Watts	6.00 Metres	Galvanised Steel	
Y	4	STREET LIGHTING	HEIMDALL ROAD	GRIMSBY	526024.44	406853.5	1993		50469	Urbis	Axia 16 LED 350mA	19 Watts	6.00 Metres	Galvanised Steel	
Y	5	STREET LIGHTING	HEIMDALL ROAD	GRIMSBY	526028.87	406882.66	1993		50470	Urbis	Axia 16 LED 350mA	19 Watts	6.00 Metres	Galvanised Steel	
Y	6	STREET LIGHTING	HEIMDALL ROAD	GRIMSBY	526044.88	406903	1993		50471	Urbis	Axia 16 LED 350mA	19 Watts	6.00 Metres	Galvanised Steel	
Y	7	STREET LIGHTING	HEIMDALL ROAD	GRIMSBY	526044.88	406932.55	1997		50472	Urbis	Axia 16 LED 350mA	19 Watts	6.00 Metres	Galvanised Steel	
Y	8	STREET LIGHTING	HEIMDALL ROAD	GRIMSBY	526056.85	406958.42	1997		50473	Urbis	Axia 16 LED 350mA	19 Watts	6.00 Metres	Galvanised Steel	
Y	9	STREET LIGHTING	HEIMDALL ROAD	GRIMSBY	526048.01	406981.16	1997		50474	Urbis	Axia 16 LED 350mA	19 Watts	6.00 Metres	Galvanised Steel	
Y	10	STREET LIGHTING	FOOTPATH BETWEEN HEIMDALL	GRIMSBY	526055.55	407002.7	1998		48730	Urbis	Axia 8 LED 350mA	10 Watts	5.00 Metres	Galvanised Steel	
Y	11	STREET LIGHTING	FOOTPATH BETWEEN HEIMDALL	GRIMSBY	526082.84	407002.46	1998		48731	Urbis	Axia 8 LED 350mA	10 Watts	5.00 Metres	Galvanised Steel	
Y	12	STREET LIGHTING	FOOTPATH BETWEEN HEIMDALL	GRIMSBY	526085.26	407033.43	1998		48732	Urbis	Axia 8 LED 350mA	10 Watts	5.00 Metres	Galvanised Steel	
Y	13	STREET LIGHTING	FOOTPATH BETWEEN HEIMDALL	GRIMSBY	526089.34	407062.02	1998		48733	Urbis	Axia 8 LED 350mA	10 Watts	5.00 Metres	Galvanised Steel	
Y	14	STREET LIGHTING	FOOTPATH BETWEEN HEIMDALL	GRIMSBY	526099.44	407090.84	1998		48734	Urbis	Axia 8 LED 350mA	10 Watts	5.00 Metres	Galvanised Steel	
Y	15	STREET LIGHTING	FOOTPATH BETWEEN HEIMDALL	GRIMSBY	526101.61	407116.08	1998		48735	Urbis	Axia 8 LED 350mA	10 Watts	5.00 Metres	Galvanised Steel	
Y	16	STREET LIGHTING	FOOTPATH BETWEEN HEIMDALL	GRIMSBY	526103.13	407144.45	1998		48736	Urbis	Axia 8 LED 350mA	10 Watts	5.00 Metres	Galvanised Steel	
Y	1	STREET LIGHTING	MARYLEBONE WALK	GRIMSBY	525675.42	406754.9	1998		53410	Urbis	Axia 16 LED 350mA	19 Watts	5.00 Metres	Galvanised Steel	
Y	2	STREET LIGHTING	MARYLEBONE WALK	GRIMSBY	525644.54	406774.9	1998		53411	Urbis	Axia 16 LED 350mA	19 Watts	5.00 Metres	Galvanised Steel	
Y	1	STREET LIGHTING	NEWMARCH COURT	GRIMSBY	525945.47	406559.97	2006	31/10/2006	54137	Urbis	Axia 16 LED 350mA	19 Watts	5.00 Metres	Steel	
Y	2	STREET LIGHTING	NEWMARCH COURT	GRIMSBY	525905.33	406565.31	2006	31/10/2006	54138	Urbis	Axia 16 LED 350mA	19 Watts	5.00 Metres	Steel	
Y	1	STREET LIGHTING	ODIN COURT	GRIMSBY	526033.44	406954.62	1998		54358	Urbis	Axia 16 LED 350mA	19 Watts	5.00 Metres	Galvanised Steel	
Y	2	STREET LIGHTING	ODIN COURT	GRIMSBY	526008.88	406962.53	1998		54359	Urbis	Axia 16 LED 350mA	19 Watts	5.00 Metres	Galvanised Steel	
Y	3	STREET LIGHTING	ODIN COURT	GRIMSBY	525982.18	406951.71	1998		54360	Urbis	Axia 16 LED 350mA	19 Watts	5.00 Metres	Galvanised Steel	
Y	4	STREET LIGHTING	ODIN COURT	GRIMSBY	526003.44	406942.29	1998		54361	Urbis	Axia 16 LED 350mA	19 Watts	5.00 Metres	Galvanised Steel	
Y	5	STREET LIGHTING	ODIN COURT	GRIMSBY	526004.33	406917.29	1998		54362	Urbis	Axia 16 LED 350mA	19 Watts	5.00 Metres	Galvanised Steel	
Y	6	STREET LIGHTING	ODIN COURT	GRIMSBY	525996.65	406902.98	2020	10/01/2020	67777	Urbis	Axia 16 LED 350mA	19 Watts	6.00 Metres	Galvanised Steel	
Y	1	STREET LIGHTING	WATERLOO DRIVE	GRIMSBY	525980.55	406689.79	1997		59860	Urbis	Axia 16 LED 350mA	19 Watts	5.00 Metres	Galvanised Steel	
Y	2	STREET LIGHTING	WATERLOO DRIVE	GRIMSBY	525970.43	406663.02	1998		59861	Urbis	Axia 16 LED 350mA	19 Watts	5.00 Metres	Galvanised Steel	
Y	3	STREET LIGHTING	WATERLOO DRIVE	GRIMSBY	525982.2	406636.56	1998		59862	Urbis	Axia 16 LED 350mA	19 Watts	5.00 Metres	Galvanised Steel	
Y	1	STREET LIGHTING	ASGARD WAY	GRIMSBY	526007.52	406833.71	1998		43382	Urbis	Axia 16 LED 350mA	19 Watts	5.00 Metres	Galvanised Steel	
Y	2	STREET LIGHTING	ASGARD WAY	GRIMSBY	525976.38	406844.98	1998		43383	Urbis	Axia 16 LED 350mA	19 Watts	5.00 Metres	Galvanised Steel	
Y	3	STREET LIGHTING	ASGARD WAY	GRIMSBY	525947.65	406840.23	1998		43384	Urbis	Axia 16 LED 350mA	19 Watts	5.00 Metres	Galvanised Steel	
Y	4	STREET LIGHTING	ASGARD WAY	GRIMSBY	525915.32	406833.03	1999		43385	Urbis	Axia 16 LED 350mA	19 Watts	5.00 Metres	Galvanised Steel	
Y	5	STREET LIGHTING	ASGARD WAY	GRIMSBY	525897.1	406831.51	1999		43386	Urbis	Axia 16 LED 350mA	19 Watts	5.00 Metres	Galvanised Steel	
Y	6	STREET LIGHTING	ASGARD WAY	GRIMSBY	525872.29	406838.6	1999		43387	Urbis	Axia 16 LED 350mA	19 Watts	5.00 Metres	Galvanised Steel	
Y	7	STREET LIGHTING	ASGARD WAY	GRIMSBY	525866.21	406822.78	1999		43388	Urbis	Axia 16 LED 350mA	19 Watts	5.00 Metres	Galvanised Steel	
Y	8	STREET LIGHTING	ASGARD WAY	GRIMSBY	525931.35	406825.24	2000		43389	Urbis	Axia 16 LED 350mA	19 Watts	5.00 Metres	Galvanised Steel	
Y	9	STREET LIGHTING	ASGARD WAY	GRIMSBY	525918.04	406801.87	2000		43390	Urbis	Axia 16 LED 350mA	19 Watts	5.00 Metres	Galvanised Steel	
Y	10	STREET LIGHTING	ASGARD WAY	GRIMSBY	525915.53	406851.91	1999		43391	Urbis	Axia 16 LED 350mA	19 Watts	5.00 Metres	Galvanised Steel	
Y	11	STREET LIGHTING	ASGARD WAY	GRIMSBY	525926.97	406876.13	1999		43392	Urbis	Axia 16 LED 350mA	19 Watts	5.00 Metres	Galvanised Steel	
Y	12	STREET LIGHTING	ASGARD WAY	GRIMSBY	525910.52	406872.53	1999		43393	Urbis	Axia 16 LED 350mA	19 Watts	5.00 Metres	Galvanised Steel	
Y	1	STREET LIGHTING	HEATHERDALE CLOSE	GRIMSBY	526557.6	405222.83	1998		50459	Urbis	Axia 16 LED 350mA	19 Watts	5.00 Metres	Galvanised Steel	
Y	2	STREET LIGHTING	HEATHERDALE CLOSE	GRIMSBY	526530.26	405225.87	1998		50460	Urbis	Axia 16 LED 350mA	19 Watts	5.00 Metres	Galvanised Steel	
Y	3	STREET LIGHTING	HEATHERDALE CLOSE	GRIMSBY	526505.2	405225.36	1998		50461	Urbis	Axia 16 LED 350mA	19 Watts	5.00 Metres	Galvanised Steel	
Y	4	STREET LIGHTING	HEATHERDALE CLOSE	GRIMSBY	526490.26	405227.14	1998		50462	Urbis	Axia 16 LED 350mA	19 Watts	5.00 Metres	Galvanised Steel	
Y	1	STREET LIGHTING	MARKHAMS ORCHARD	GRIMSBY	526561.27	405083.56	1997		53344	Urbis	Axia 16 LED 350mA	19 Watts	5.00 Metres	Galvanised Steel	
Y	2	STREET LIGHTING	MARKHAMS ORCHARD	GRIMSBY	526585.07	405082.04	1997		53345	Urbis	Axia 16 LED 350mA	19 Watts	5.00 Metres	Galvanised Steel	
Y	3	STREET LIGHTING	MARKHAMS ORCHARD	GRIMSBY	526604.94	405088.31	1997		53346	Urbis	Axia 16 LED 350mA	19 Watts	5.00 Metres	Galvanised Steel	
Y	4	STREET LIGHTING	MARKHAMS ORCHARD	GRIMSBY	526616.46	405108.88	1997		53347	Urbis	Axia 16 LED 350mA	19 Watts	5.00 Metres	Galvanised Steel	
Y	5	STREET LIGHTING	MARKHAMS ORCHARD	GRIMSBY	526629.88	405092.42	1997		53348	Urbis	Axia 16 LED 350mA	19 Watts	5.00 Metres	Galvanised Steel	
Y	1	STREET LIGHTING	BROOKFIELD ROAD	GRIMSBY	525816.34	405784.84	2017	30/06/2017	44854	Urbis	Axia 16 LED 350mA	19 Watts	6.00 Metres	Galvanised Steel	
Y	2	STREET LIGHTING	BROOKFIELD ROAD	GRIMSBY	525852.28	405795.73	2017	30/06/2017	44855	Urbis	Axia 16 LED 350mA	19 Watts	6.00 Metres	Galvanised Steel	
Y	3	STREET LIGHTING	BROOKFIELD ROAD	GRIMSBY	525877.51	405818.24	2017	30/06/2017	44856	1 Urbis LED	Teceo 16 LED 500mA	28 Watts	6.00 Metres	Galvanised Steel	
Y	4	STREET LIGHTING	BROOKFIELD ROAD	GRIMSBY	525905.11	405854.91	2017	30/06/2017	44857	1 Urbis LED	Teceo 16 LED 500mA	28 Watts	6.00 Metres	Galvanised Steel	
Y	5	STREET LIGHTING	BROOKFIELD ROAD	GRIMSBY	525940.68	405875.41	2017	30/06/2017	44858	Urbis	Axia 16 LED 350mA	19 Watts	6.00 Metres	Galvanised Steel	
Y	6	STREET LIGHTING	BROOKFIELD ROAD	GRIMSBY	525958.92	405907.63	2015	30/07/2015	44859	Urbis	Axia 16 LED 350mA	19 Watts	6.00 Metres	Galvanised Steel	
Y	7	STREET LIGHTING	BROOKFIELD ROAD	GRIMSBY	525982.06	405931.41	2017	30/06/2017	44860	1 Urbis LED	Teceo 16 LED 500mA	28 Watts	6.00 Metres	Galvanised Steel	
Y	8	STREET LIGHTING	BROOKFIELD ROAD	GRIMSBY	525995.51	405957.19	2017	30/06/2017	44861	1 Urbis LED	Teceo 16 LED 500mA	28 Watts	6.00 Metres	Galvanised Steel	
Y	9	STREET LIGHTING	BROOKFIELD ROAD	GRIMSBY	526003.85	405991.31	2017	30/06/2017	44862	1 Urbis LED	Teceo 16 LED 500mA	28 Watts	6.00 Metres	Galvanised Steel	
Y	10	STREET LIGHTING	BROOKFIELD ROAD	GRIMSBY	525993.77	406032.97	2017	30/06/2017	44863	Urbis	Axia 16 LED 350mA	19 Watts	6.00 Metres	Galvanised Steel	

Y	11	STREET LIGHTING	BROOKFIELD ROAD	GRIMSBY	525988.05	406068.64	2017	30/06/2017	44864	Urbis	Axia 16 LED 350mA	19 Watts	6.00 Metres	Galvanised Steel	
Y	12	STREET LIGHTING	BROOKFIELD ROAD	GRIMSBY	525989.78	406105.94	2017	30/06/2017	44865	Urbis	Axia 16 LED 350mA	19 Watts	6.00 Metres	Galvanised Steel	
Y	13	STREET LIGHTING	BROOKFIELD ROAD	GRIMSBY	525976.79	406134.46	2003		44866	Urbis	Axia 16 LED 350mA	19 Watts	6.00 Metres	Stainless Steel	
Y	14	STREET LIGHTING	BROOKFIELD ROAD	GRIMSBY	525979.25	406172.11	2017	30/06/2017	44867	Urbis	Axia 16 LED 350mA	19 Watts	6.00 Metres	Galvanised Steel	
Y	15	STREET LIGHTING	BROOKFIELD ROAD	GRIMSBY	525973.62	406205.23	2017	30/06/2017	44868	Urbis	Axia 16 LED 350mA	19 Watts	6.00 Metres	Galvanised Steel	
Y	16	STREET LIGHTING	BROOKFIELD ROAD	GRIMSBY	525968.81	406235.08	2017	30/06/2017	44869	Urbis	Axia 16 LED 350mA	19 Watts	6.00 Metres	Galvanised Steel	
Y	17	STREET LIGHTING	BROOKFIELD ROAD	GRIMSBY	525955.75	406262.13	2017	30/06/2017	44870	Urbis	Axia 16 LED 350mA	19 Watts	6.00 Metres	Galvanised Steel	
Y	1	STREET LIGHTING	ADELPHI DRIVE	GRIMSBY	526397.69	405118.44	1992		42747	Urbis	Axia 16 LED 350mA	19 Watts	6.00 Metres	Galvanised Steel	
Y	2	STREET LIGHTING	ADELPHI DRIVE	GRIMSBY	526422.73	405118.62	1992		42748	Urbis	Axia 16 LED 350mA	19 Watts	6.00 Metres	Galvanised Steel	
Y	3	STREET LIGHTING	ADELPHI DRIVE	GRIMSBY	526450.34	405118.44	1992		42749	Urbis	Axia 16 LED 350mA	19 Watts	6.00 Metres	Galvanised Steel	
Y	4	STREET LIGHTING	ADELPHI DRIVE	GRIMSBY	526481.46	405116.32	2001		42750	Urbis	Axia 16 LED 350mA	19 Watts	6.00 Metres	Galvanised Steel	
Y	1	STREET LIGHTING	ALLESTREE DRIVE	GRIMSBY	526284.02	405286.3	2016	31/03/2016	43084	Urbis	Axia 16 LED 350mA	19 Watts	6.00 Metres	Galvanised Steel	
Y	2	STREET LIGHTING	ALLESTREE DRIVE	GRIMSBY	526257.06	405317.25	2016	31/03/2016	43085	Urbis	Axia 16 LED 350mA	19 Watts	6.00 Metres	Galvanised Steel	
Y	3	STREET LIGHTING	ALLESTREE DRIVE	GRIMSBY	526225.17	405335.73	2016	31/03/2016	43093	Urbis	Axia 16 LED 350mA	19 Watts	6.00 Metres	Galvanised Steel	
Y	4	STREET LIGHTING	ALLESTREE DRIVE	GRIMSBY	526197.32	405355.6	2016	31/03/2016	43092	Urbis	Axia 16 LED 350mA	19 Watts	6.00 Metres	Galvanised Steel	
Y	5	STREET LIGHTING	ALLESTREE DRIVE	GRIMSBY	526175.17	405369.21	2016	31/03/2016	43091	Urbis	Axia 16 LED 350mA	19 Watts	6.00 Metres	Galvanised Steel	
Y	6	STREET LIGHTING	ALLESTREE DRIVE	GRIMSBY	526149.6	405388.39	2016	31/03/2016	43090	Urbis	Axia 16 LED 350mA	19 Watts	6.00 Metres	Galvanised Steel	
Y	7	STREET LIGHTING	ALLESTREE DRIVE	GRIMSBY	526163.9	405411.23	2016	31/03/2016	43089	Urbis	Axia 16 LED 350mA	19 Watts	6.00 Metres	Galvanised Steel	
Y	8	STREET LIGHTING	ALLESTREE DRIVE	GRIMSBY	526187.57	405423.32	2016	31/03/2016	43088	Urbis	Axia 16 LED 350mA	19 Watts	6.00 Metres	Galvanised Steel	
Y	9	STREET LIGHTING	ALLESTREE DRIVE	GRIMSBY	526206.18	405391.74	2016	31/03/2016	43087	Urbis	Axia 16 LED 350mA	19 Watts	6.00 Metres	Galvanised Steel	
Y	10	STREET LIGHTING	ALLESTREE DRIVE	GRIMSBY	526218.21	405364.59	2016	31/03/2016	43086	Urbis	Axia 16 LED 350mA	19 Watts	6.00 Metres	Galvanised Steel	
Y	1	STREET LIGHTING	AMESBURY AVENUE	GRIMSBY	525926.67	405440.41	2017	30/06/2017	43140	Urbis	Axia 16 LED 350mA	19 Watts	6.00 Metres	Galvanised Steel	
Y	2	STREET LIGHTING	AMESBURY AVENUE	GRIMSBY	525950.32	405472.41	2017	30/06/2017	43141	Urbis	Axia 16 LED 350mA	19 Watts	6.00 Metres	Galvanised Steel	
Y	3	STREET LIGHTING	AMESBURY AVENUE	GRIMSBY	525972.03	405496.82	2017	30/06/2017	43142	Urbis	Axia 16 LED 350mA	19 Watts	6.00 Metres	Galvanised Steel	
Y	4	STREET LIGHTING	AMESBURY AVENUE	GRIMSBY	525998.81	405524.53	2017	30/06/2017	43143	Urbis	Axia 16 LED 350mA	19 Watts	6.00 Metres	Galvanised Steel	
Y	5	STREET LIGHTING	AMESBURY AVENUE	GRIMSBY	526031.67	405554.26	2017	30/06/2017	43144	Urbis	Axia 16 LED 350mA	19 Watts	6.00 Metres	Galvanised Steel	
Y	6	STREET LIGHTING	AMESBURY AVENUE	GRIMSBY	526053.81	405569.81	2017	30/06/2017	43145	Urbis	Axia 16 LED 350mA	19 Watts	6.00 Metres	Galvanised Steel	
Y	7	STREET LIGHTING	AMESBURY AVENUE	GRIMSBY	526070	405549	2002		43146	Urbis	Axia 16 LED 350mA	19 Watts	5.00 Metres	Stainless Steel	
Y	8	STREET LIGHTING	AMESBURY AVENUE	GRIMSBY	526102.21	405524.95	2017	30/06/2017	43147	Urbis	Axia 16 LED 350mA	19 Watts	6.00 Metres	Galvanised Steel	
Y	9	STREET LIGHTING	AMESBURY AVENUE	GRIMSBY	526118	405493	2002		43148	Urbis	Axia 16 LED 350mA	19 Watts	5.00 Metres	Stainless Steel	
Y	10	STREET LIGHTING	AMESBURY AVENUE	GRIMSBY	526135.49	405485.31	2021	01/06/2021	68454	Urbis	Axia 16 LED 350mA	19 Watts	6.00 Metres	Galvanised Steel	
Y	11	STREET LIGHTING	AMESBURY AVENUE	GRIMSBY	526106.26	405441.83	2017	30/06/2017	43150	Urbis	Axia 16 LED 350mA	19 Watts	6.00 Metres	Galvanised Steel	
Y	1	STREET LIGHTING	AMOS CLOSE	GRIMSBY	525896.8	405355.33	2015	30/07/2015	43156	1 Urbis LED	Axia 16 LED 500mA	28 Watts	6.00 Metres	Galvanised Steel	
Y	2	STREET LIGHTING	AMOS CLOSE	GRIMSBY	525910.97	405327.71	2015	30/07/2015	43157	1 Urbis LED	Axia 16 LED 500mA	28 Watts	6.00 Metres	Galvanised Steel	
Y	1	STREET LIGHTING	ANCASTER AVENUE	GRIMSBY	525992.07	405810.42	1988		43169	Urbis	Axia 16 LED 350mA	19 Watts	5.00 Metres	Galvanised Steel	
Y	2	STREET LIGHTING	ANCASTER AVENUE	GRIMSBY	525988.02	405781.05	1988		43170	Urbis	Axia 16 LED 350mA	19 Watts	5.00 Metres	Galvanised Steel	
Y	3	STREET LIGHTING	ANCASTER AVENUE	GRIMSBY	526000.36	405754.17	1988		43171	Urbis	Axia 16 LED 350mA	19 Watts	5.00 Metres	Galvanised Steel	
Y	4	STREET LIGHTING	ANCASTER AVENUE	GRIMSBY	526005.56	405722.54	1988		43172	Urbis	Axia 16 LED 350mA	19 Watts	5.00 Metres	Galvanised Steel	
Y	5	STREET LIGHTING	ANCASTER AVENUE	GRIMSBY	526010.72	405689.76	1988		43173	Urbis	Axia 16 LED 350mA	19 Watts	5.00 Metres	Galvanised Steel	
Y	6	STREET LIGHTING	ANCASTER AVENUE	GRIMSBY	526015.5	405657.45	1988		43174	Urbis	Axia 16 LED 350mA	19 Watts	5.00 Metres	Galvanised Steel	
Y	7	STREET LIGHTING	ANCASTER AVENUE	GRIMSBY	526019	405634.71	1988		43175	Urbis	Axia 16 LED 350mA	19 Watts	5.00 Metres	Galvanised Steel	
Y	8	STREET LIGHTING	ANCASTER AVENUE	GRIMSBY	525997.83	405614.09	1988		43176	Urbis	Axia 16 LED 350mA	19 Watts	5.00 Metres	Galvanised Steel	
Y	9	STREET LIGHTING	ANCASTER AVENUE	GRIMSBY	525986.04	405590.62	1988		43177	Urbis	Axia 16 LED 350mA	19 Watts	5.00 Metres	Galvanised Steel	
Y	10	STREET LIGHTING	ANCASTER AVENUE	GRIMSBY	525963.4	405581.14	1988		43178	Urbis	Axia 16 LED 350mA	19 Watts	5.00 Metres	Galvanised Steel	
Y	11	STREET LIGHTING	ANCASTER AVENUE	GRIMSBY	525951.43	405558.12	1988		43179	Urbis	Axia 16 LED 350mA	19 Watts	5.00 Metres	Galvanised Steel	
Y	12	STREET LIGHTING	ANCASTER AVENUE	GRIMSBY	525930.62	405545.69	1988		43180	Urbis	Axia 16 LED 350mA	19 Watts	5.00 Metres	Galvanised Steel	
Y	13	STREET LIGHTING	ANCASTER AVENUE	GRIMSBY	525910.55	405554.44	1988		43181	Urbis	Axia 16 LED 350mA	19 Watts	5.00 Metres	Galvanised Steel	
Y	14	STREET LIGHTING	ANCASTER AVENUE	GRIMSBY	525902.45	405588.59	1988		43182	Urbis	Axia 16 LED 350mA	19 Watts	5.00 Metres	Galvanised Steel	
Y	15	STREET LIGHTING	ANCASTER AVENUE	GRIMSBY	525885.33	405602.86	1988		43183	Urbis	Axia 16 LED 350mA	19 Watts	5.00 Metres	Galvanised Steel	
Y	16	STREET LIGHTING	ANCASTER AVENUE	GRIMSBY	525873.18	405632.6	1988		43184	Urbis	Axia 16 LED 350mA	19 Watts	5.00 Metres	Galvanised Steel	
Y	17	STREET LIGHTING	ANCASTER AVENUE	GRIMSBY	525896.01	405653.5	1988		43185	Urbis	Axia 16 LED 350mA	19 Watts	5.00 Metres	Galvanised Steel	
Y	18	STREET LIGHTING	ANCASTER AVENUE	GRIMSBY	525910.92	405678.63	1988		43186	Urbis	Axia 16 LED 350mA	19 Watts	5.00 Metres	Galvanised Steel	
Y	19	STREET LIGHTING	ANCASTER AVENUE	GRIMSBY	525931.91	405686.55	1988		43187	Urbis	Axia 16 LED 350mA	19 Watts	5.00 Metres	Galvanised Steel	
Y	20	STREET LIGHTING	ANCASTER AVENUE	GRIMSBY	525955.66	405707.81	1988		43188	Urbis	Axia 16 LED 350mA	19 Watts	5.00 Metres	Galvanised Steel	
Y	21	STREET LIGHTING	ANCASTER AVENUE	GRIMSBY	525977.2	405727.6	1988		43189	Urbis	Axia 16 LED 350mA	19 Watts	5.00 Metres	Galvanised Steel	
Y	22	STREET LIGHTING	ANCASTER AVENUE	GRIMSBY	525990.1	405733.58	1988		43190	Urbis	Axia 16 LED 350mA	19 Watts	5.00 Metres	Galvanised Steel	
Y	1	STREET LIGHTING	BARBARA CLOSE	GRIMSBY	526153.34	405246.89	2015	30/07/2015	43584	Urbis	Axia 16 LED 350mA	19 Watts	6.00 Metres	Galvanised Steel	
Y	2	STREET LIGHTING	BARBARA CLOSE	GRIMSBY	526175.98	405267.97	1992		43585	Urbis	Axia 16 LED 350mA	19 Watts	5.00 Metres	Galvanised Steel	
Y	1	STREET LIGHTING	BAYONS AVENUE	GRIMSBY	525930.23	405665.51	1988		43823	Urbis	Axia 16 LED 350mA	19 Watts	5.00 Metres	Galvanised Steel	
Y	2	STREET LIGHTING	BAYONS AVENUE	GRIMSBY	525938.71	405641.91	1988		43824	Urbis	Axia 16 LED 350mA	19 Watts	5.00 Metres	Galvanised Steel	
Y	3	STREET LIGHTING	BAYONS AVENUE	GRIMSBY	525962.64	405626.91	1988		43825	Urbis	Axia 16 LED 350mA	19 Watts	5.00 Metres	Galvanised Steel	
Y	4	STREET LIGHTING	BAYONS AVENUE	GRIMSBY	525971.5	405602.41	1988		43826	Urbis	Axia 16 LED 350mA	19 Watts	5.00 Metres	Galvanised Steel	
Y	1	STREET LIGHTING	BAYSWATER PLACE	GRIMSBY	525952.66	405968.31	2017	30/06/2017	43827	1 Urbis LED	Axia 16 LED 500mA	28 Watts	6.00 Metres	Galvanised Steel	
Y	1	STREET LIGHTING	BRIXHAM COURT	GRIMSBY	526339.61	404894.74	2020	01/07/2020	67885	Urbis	Axia 16 LED 350mA	19 Watts	6.00 Metres	Galvanised Steel	
Y	2	STREET LIGHTING	BRIXHAM COURT	GRIMSBY	526347.59	404859.45	2020	01/07/2020	68172	Urbis	Axia 16 LED 350mA	19 Watts	6.00 Metres	Galvanised Steel	
Y	1	STREET LIGHTING	BULWICK AVENUE	GRIMSBY	526295.05	405249.87	2017	30/06/2017	44930	Urbis	Axia 16 LED 350mA	19 Watts	6.00 Metres	Galvanised Steel	
Y	2	STREET LIGHTING	BULWICK AVENUE	GRIMSBY	526302.78	405213.31	1963		44931	Urbis	Axia 16 LED 350mA	19 Watts	5.00 Metres	Steel	
Y	3	STREET LIGHTING	BULWICK AVENUE	GRIMSBY	526295.81	405175.62	2017	30/06/2017	44932	Urbis	Axia 16 LED 350mA	19 Watts	6.00 Metres	Galvanised Steel	
Y	4	STREET LIGHTING	BULWICK AVENUE	GRIMSBY	526304.26	405140.65	2017	30/06/2017	44933	Urbis	Axia 16 LED 350mA	19 Watts	6.00 Metres	Galvanised Steel	
Y	5	STREET LIGHTING	BULWICK AVENUE	GRIMSBY	526303.33	405105.17	2014		44934	Urbis	Axia 16 LED 350mA	19 Watts	6.00 Metres	Galvanised Steel	
Y	6	STREET LIGHTING	BULWICK AVENUE	GRIMSBY	526296.07	405068.85	2017	30/06/2017	44935	Urbis	Axia 16 LED 350mA	19 Watts	6.00 Metres	Galvanised Steel	
Y	7	STREET LIGHTING	BULWICK AVENUE	GRIMSBY	526296.07	405033.71	2017	30/06/2017	44936	Urbis	Axia 16 LED 350mA	19 Watts	6.00 Metres	Galvanised Steel	
Y	8	STREET LIGHTING	BULWICK AVENUE	GRIMSBY	526297	404988	2002		44937	Urbis	Axia 16 LED 350mA	19 Watts	5.00 Metres	Stainless Steel	
Y	1	STREET LIGHTING	CHILTERN WAY	GRIMSBY	526449.36	405921.93	2016	30/09/2016	45920	1 Urbis LED	Axia 16 LED 500mA	28 Watts	6.00 Metres	Galvanised Steel	
Y	1	STREET LIGHTING	CONISTON AVENUE	GRIMSBY	525840.07	405173.94	2019	03/10/2019	67630	Urbis	Teceo 24 LED 500mA	40 Watts	8.00 Metres	Galvanised Steel	
Y	2	STREET LIGHTING	CONISTON AVENUE	GRIMSBY	525823.75	405188.97	1959		46526	1 Urbis LED	Teceo 24 LED 500mA	40 Watts	8.00 Metres	Steel	
Y	3	STREET LIGHTING	CONISTON AVENUE	GRIMSBY	525841.36	405194.44	1946		46527	1 Urbis LED	Teceo 24 LED 500mA	40 Watts	8.00 Metres	Steel	
Y	4	STREET LIGHTING	CONISTON AVENUE	GRIMSBY	525856.83	405221.32	1946		46528	1 Urbis LED	Teceo 24 LED 500mA	40 Watts	8.00 Metres	Steel	
Y	5	STREET LIGHTING	CONISTON AVENUE	GRIMSBY	525886.84	405232.09	1946		46529	1 Urbis LED	Teceo 24 LED 500mA	40 Watts	8.00 Metres	Steel	
Y	6	STREET LIGHTING	CONISTON AVENUE	GRIMSBY	525896.6	405253.91	1946		46530	1 Urbis LED	Teceo 24 LED 500mA	40 Watts	8.00 Metres	Steel	
Y	7	STREET LIGHTING	CONISTON AVENUE	GRIMSBY	525925.87	405264.22	1946		46531	1 Urbis LED	Teceo 24 LED 500mA	40 Watts	8.00 Metres	Steel	
Y	8	STREET LIGHTING	CONISTON AVENUE	GRIMSBY	525931.95	405282.26	1946		46532	1 Urbis LED	Teceo 24 LED 500mA	40 Watts	8.00 Metres	Steel	
Y	9	STREET LIGHTING	CONISTON AVENUE	GRIMSBY	525951.09	405283	1946		46533	1 Urbis LED	Teceo 24 LED 500mA	40 Watts	8.00 Metres	Steel	
Y	10	STREET LIGHTING	CONISTON AVENUE	GRIMSBY	525974.29	405314.76	2013		46534	1 Urbis LED	Teceo 24 LED 500mA	40 Watts	8.00 Metres	Galvanised Steel	
Y	11	STREET LIGHTING	CONISTON AVENUE	GRIMSBY	525999.7	405320.28	1946		46535	1 Urbis LED	Teceo 24 LED 500mA	40 Watts	8.00 Metres	Steel	
Y	12	STREET LIGHTING	CONISTON AVENUE	GRIMSBY	526008.72	405341.18	1946		46536	1 Urbis LED	Teceo 24 LED 500mA	40 Watts	8.00 Metres	Steel	
Y	13	STREET LIGHTING	CONISTON AVENUE	GRIMSBY	526032.66	405346.06	1946		46537	1 Urbis LED	Teceo 24 LED 500mA	40 Watts	8.00 Metres	Steel	
Y	14	STREET LIGHTING	CONISTON AVENUE	GRIMSBY	526037.44	405363.37	2008		46538	1 Urbis LED	Teceo 24 LED 500mA	40 Watts	8.00 Metres	Steel	
Y	15	STREET LIGHTING	CONISTON AVENUE	GRIMSBY	526058.62	405365.76	1946		46539	1 Urbis LED	Teceo 24 LED 500mA	40 Watts	8.00 Metres	Steel	
Y	16	STREET LIGHTING	CONISTON AVENUE	GRIMSBY	526077.77	405380.58	2015	30/07/2015	46540	1 Urbis LED	Axia 16 LED 500mA	28 Watts	6.00 Metres	Galvanised Steel	
Y	17	STREET LIGHTING	CONISTON AVENUE	GRIMSBY	526105.94	405407.65	2015	30/07/2015	46541	1 Urbis LED	Axia 16 LED 500mA	28 Watts	6.00 Metres	Galvanised Steel	
Y	1	STREET LIGHTING	CONISTON AVENUE SHOPS	GRIMSBY	525995.97	405287.26	2017	30/06/2017	46542	Urbis	Axia 16 LED 350mA	19 Watts	6.00 Metres	Galvanised Steel	
Y	2	STREET LIGHTING	CONISTON AVENUE SHOPS	GRIMSBY	526018.55	405304.69	2017	30/06/2017	46543	Urbis	Axia 16 LED 350mA	19 Watts	6.00 Metres	Galvanised Steel	
Y	1	STREET LIGHTING	DAWLISH ROAD	GRIMSBY	526430.48	404992.16	2020	30/06/2020	67888	Urbis	Axia 16 LED 350mA	19 Watts	6.00 Metres	Galvanised Steel	
Y	2	STREET LIGHTING	DAWLISH ROAD	GRIMSBY	526429.36	404959.73	2020	30/06/2020	68173	Urbis	Axia 16 LED 350mA	19 Watts	6.00 Metres	Galvanised Steel	
Y	1	STREET LIGHTING	DERRY WAY	GRIMSBY	526408.16	405789.49	2009		47441	Urbis	Axia 16 LED 350mA	19 Watts	6.00 Metres	Steel	
Y	2	STREET LIGHTING	DERRY WAY	GRIMSBY	526416.46	405777.25	2009		47442	Urbis	Axia 16 LED 350mA	19 Watts	6.00 Metres	Steel	
Y	3	STREET LIGHTING	DERRY WAY	GRIMSBY	526422.36	405762.07	2009		47443	Urbis	Axia 16 LED 350mA	19 Watts	6.00 Metres	Steel	
Y	4	STREET LIGHTING	DERRY WAY	GRIMSBY	526432.9	405761.43	2009		47444	Urbis	Axia 8 LED 350mA	10 Watts	6.00 Metres	Steel	
Y	5	STREET LIGHTING	DERRY WAY	GRIMSBY	526446.84	405769.37	2009		47445	Urbis	Axia 8 LED 350mA	10 Watts	6.00 Metres	Steel	
Y	6	STREET LIGHTING	DERRY WAY	GRIMSBY	526476.87	405768.68	2009		47446	Urbis	Axia 8 LED 350mA	10 Watts	6.00 Metres	Steel	
Y	7	STREET LIGHTING	DERRY WAY	GRIMSBY	526460.85	405756.37	2009		47447	Urbis	Axia 8 LED 350mA	10 Watts	6.00 Metres	Steel	
Y	8	STREET LIGHTING	DERRY WAY	GRIMSBY	526450.57	405744.91	2009		47448	Urbis	Axia 8 LED 350mA	10 Watts	6.00 Metres	Steel	
Y	9	STREET LIGHTING	DERRY WAY	GRIMSBY	526436.73	405738.36	2009		47449	Urbis	Axia 8 LED 350mA	10 Watts	6.00 Metres	Steel	
Y	10	STREET LIGHTING	DERRY WAY	GRIMSBY	526418.91	405742.79	2009		47450	Urbis	Axia 16 LED 350mA	19 Watts	6.00 Metres	Steel	
Y	1	STREET LIGHTING	FOOTPATH BETWEEN DERRY WAY	GRIMSBY	526492.29	405761.22	2013		48705	Urbis	Axia 16 LED 350mA	19 Watts	6.00 Metres	Steel	
Y	2	STREET LIGHTING	FOOTPATH BETWEEN DERRY WAY	GRIMSBY	526516.11	405765.45	2013		48706	Urbis	Axia 16 LED 350mA	19 Watts	6.00 Metres	Steel	
Y	3	STREET LIGHTING	FOOTPATH BETWEEN DERRY WAY	GRIMSBY	526492.29	405761.22	2013		48707	Urbis	Axia 16 LED 350mA	19 Watts	6.00 Metres	Steel	
Y	1	STREET LIGHTING	ELIZABETH CLOSE	GRIMSBY	525970.21	405466.27	2018	28/12/2018	67268	Urbis	Axia 16 LED 350mA	19 Watts	6.00 Metres	Galvanised Steel	
Y	2	STREET LIGHTING	ELIZABETH CLOSE	GRIMSBY	525980	405442	2001		47912	Urbis	Axia 16 LED 350mA	19 Watts	5.00 Metres	Galvanised Steel	

Y	3	STREET LIGHTING	ELIZABETH CLOSE	GRIMSBY	526010.92	405413.82	2015	30/07/2015	47913	1 Urbis LED	Teceo 16 LED 500mA	28 Watts	6.00 Metres	Galvanised Steel	
Y	1	STREET LIGHTING	EMFIELD GROVE	GRIMSBY	526141.46	405035.12	2017	30/06/2017	48009	1 Urbis LED	Axia 16 LED 500mA	28 Watts	6.00 Metres	Galvanised Steel	
Y	2	STREET LIGHTING	EMFIELD GROVE	GRIMSBY	526150.69	405015.47	2017	30/06/2017	48010	1 Urbis LED	Axia 16 LED 500mA	28 Watts	6.00 Metres	Galvanised Steel	
Y	1	STREET LIGHTING	EMFIELD ROAD	GRIMSBY	526152.21	405122.49	2017	30/06/2017	48011	Urbis	Axia 16 LED 350mA	19 Watts	6.00 Metres	Galvanised Steel	
Y	2	STREET LIGHTING	EMFIELD ROAD	GRIMSBY	526203.35	405119.68	2015		63019	Urbis	Axia 16 LED 350mA	19 Watts	6.00 Metres	Galvanised Steel	
Y	3	STREET LIGHTING	EMFIELD ROAD	GRIMSBY	526190.25	405100.6	2002		48012	Urbis	Axia 16 LED 350mA	19 Watts	6.00 Metres	Stainless Steel	
Y	4	STREET LIGHTING	EMFIELD ROAD	GRIMSBY	526159.41	405074.71	2017	30/06/2017	48013	Urbis	Axia 16 LED 350mA	19 Watts	6.00 Metres	Galvanised Steel	
Y	5	STREET LIGHTING	EMFIELD ROAD	GRIMSBY	526118.55	405054.24	2017	30/06/2017	48014	Urbis	Axia 16 LED 350mA	19 Watts	6.00 Metres	Galvanised Steel	
Y	6	STREET LIGHTING	EMFIELD ROAD	GRIMSBY	526093.41	405026.01	2017	30/06/2017	48015	Urbis	Axia 16 LED 350mA	19 Watts	6.00 Metres	Galvanised Steel	
Y	7	STREET LIGHTING	EMFIELD ROAD	GRIMSBY	526061.61	405012.26	2017	30/06/2017	48016	Urbis	Axia 16 LED 350mA	19 Watts	6.00 Metres	Galvanised Steel	
Y	8	STREET LIGHTING	EMFIELD ROAD	GRIMSBY	526039.27	404986.55	2017	30/06/2017	48017	Urbis	Axia 16 LED 350mA	19 Watts	6.00 Metres	Galvanised Steel	
Y	9	STREET LIGHTING	EMFIELD ROAD	GRIMSBY	526010.94	404974.77	2017	30/06/2017	48018	Urbis	Axia 16 LED 350mA	19 Watts	6.00 Metres	Galvanised Steel	
Y	10	STREET LIGHTING	EMFIELD ROAD	GRIMSBY	525972.89	404966.26	2017	30/06/2017	48019	Urbis	Axia 16 LED 350mA	19 Watts	6.00 Metres	Galvanised Steel	
Y	11	STREET LIGHTING	EMFIELD ROAD	GRIMSBY	525933.15	404957.75	2017	30/06/2017	48020	Urbis	Axia 16 LED 350mA	19 Watts	6.00 Metres	Galvanised Steel	
Y	12	STREET LIGHTING	EMFIELD ROAD	GRIMSBY	525895.85	404950.27	2017	30/06/2017	48021	Urbis	Axia 16 LED 350mA	19 Watts	6.00 Metres	Galvanised Steel	
Y	13	STREET LIGHTING	EMFIELD ROAD	GRIMSBY	525873.13	404970.19	2017	30/06/2017	48022	Urbis	Axia 16 LED 350mA	19 Watts	6.00 Metres	Galvanised Steel	
Y	14	STREET LIGHTING	EMFIELD ROAD	GRIMSBY	525846.11	405007.02	2017	30/06/2017	48023	Urbis	Axia 16 LED 350mA	19 Watts	6.00 Metres	Galvanised Steel	
Y	15	STREET LIGHTING	EMFIELD ROAD	GRIMSBY	525825.73	405034.98	2017	30/06/2017	48024	Urbis	Axia 16 LED 350mA	19 Watts	6.00 Metres	Galvanised Steel	
Y	16	STREET LIGHTING	EMFIELD ROAD	GRIMSBY	525803.19	405073.97	2017	30/06/2017	48025	Urbis	Axia 16 LED 350mA	19 Watts	6.00 Metres	Galvanised Steel	
Y	17	STREET LIGHTING	EMFIELD ROAD	GRIMSBY	525822.27	405093.97	2017	30/06/2017	48026	Urbis	Axia 16 LED 350mA	19 Watts	6.00 Metres	Galvanised Steel	
Y	18	STREET LIGHTING	EMFIELD ROAD	GRIMSBY	525849.94	405111.18	2017	30/06/2017	48027	Urbis	Axia 16 LED 350mA	19 Watts	6.00 Metres	Galvanised Steel	
Y	1	STREET LIGHTING	FAIRFIELD AVENUE	GRIMSBY	526388.94	405359.33	1998		48252	Urbis	Axia 16 LED 350mA	19 Watts	6.00 Metres	Steel	
Y	2	STREET LIGHTING	FAIRFIELD AVENUE	GRIMSBY	526380.84	405335.76	1998		48253	Urbis	Axia 16 LED 350mA	19 Watts	6.00 Metres	Steel	
Y	3	STREET LIGHTING	FAIRFIELD AVENUE	GRIMSBY	526389.13	405313.94	1998		48254	Urbis	Axia 16 LED 350mA	19 Watts	6.00 Metres	Steel	
Y	4	STREET LIGHTING	FAIRFIELD AVENUE	GRIMSBY	526381.03	405290.28	1998		48255	Urbis	Axia 16 LED 350mA	19 Watts	6.00 Metres	Steel	
Y	5	STREET LIGHTING	FAIRFIELD AVENUE	GRIMSBY	526389.31	405268.1	1998		48256	Urbis	Axia 16 LED 350mA	19 Watts	6.00 Metres	Steel	
Y	6	STREET LIGHTING	FAIRFIELD AVENUE	GRIMSBY	526381.02	405241.68	1998		48257	Urbis	Axia 16 LED 350mA	19 Watts	6.00 Metres	Steel	
Y	7	STREET LIGHTING	FAIRFIELD AVENUE	GRIMSBY	526381.02	405217.74	1998		48258	Urbis	Axia 16 LED 350mA	19 Watts	6.00 Metres	Steel	
Y	8	STREET LIGHTING	FAIRFIELD AVENUE	GRIMSBY	526381.02	405194.64	1997		48259	Urbis	Axia 16 LED 350mA	19 Watts	6.00 Metres	Steel	
Y	9	STREET LIGHTING	FAIRFIELD AVENUE	GRIMSBY	526389.31	405171.71	1998		48260	Urbis	Axia 16 LED 350mA	19 Watts	6.00 Metres	Steel	
Y	10	STREET LIGHTING	FAIRFIELD AVENUE	GRIMSBY	526381.02	405144.19	1998		48261	Urbis	Axia 16 LED 350mA	19 Watts	6.00 Metres	Steel	
Y	11	STREET LIGHTING	FAIRFIELD AVENUE	GRIMSBY	526381.39	405119.61	1998		48262	Urbis	Axia 16 LED 350mA	19 Watts	6.00 Metres	Steel	
Y	12	STREET LIGHTING	FAIRFIELD AVENUE	GRIMSBY	526389.68	405090.61	1998		48263	Urbis	Axia 16 LED 350mA	19 Watts	6.00 Metres	Steel	
Y	13	STREET LIGHTING	FAIRFIELD AVENUE	GRIMSBY	526389.68	405066.4	1998		48264	Urbis	Axia 16 LED 350mA	19 Watts	6.00 Metres	Steel	
Y	1	STREET LIGHTING	FAIRFIELD ROAD	GRIMSBY	526507.22	405406.7	1946		48268	Urbis	Axia 16 LED 350mA	19 Watts	8.00 Metres	Steel	
Y	2	STREET LIGHTING	FAIRFIELD ROAD	GRIMSBY	526470.01	405406.25	2013	06/08/2013	48269	Urbis	Axia 16 LED 350mA	19 Watts	8.00 Metres	Galvanised Steel	
Y	3	STREET LIGHTING	FAIRFIELD ROAD	GRIMSBY	526435.71	405416.38	1998		48270	Urbis	Axia 16 LED 350mA	19 Watts	8.00 Metres	Galvanised Steel	
Y	4	STREET LIGHTING	FAIRFIELD ROAD	GRIMSBY	526403.18	405403.98	2019	24/01/2019	48271	Urbis	Teceo 32 LED 500mA	52 Watts	8.00 Metres	Galvanised Steel	
Y	5	STREET LIGHTING	FAIRFIELD ROAD	GRIMSBY	526379.26	405375.25	1946		48272	Urbis	Axia 16 LED 350mA	19 Watts	8.00 Metres	Steel	
Y	6	STREET LIGHTING	FAIRFIELD ROAD	GRIMSBY	526367.43	405345.36	1946		48273	Urbis	Axia 16 LED 350mA	19 Watts	8.00 Metres	Steel	
Y	7	STREET LIGHTING	FAIRFIELD ROAD	GRIMSBY	526337.69	405325.78	2004		48274	Urbis	Axia 16 LED 350mA	19 Watts	8.00 Metres	Stainless Steel	
Y	8	STREET LIGHTING	FAIRFIELD ROAD	GRIMSBY	526322.5	405291.29	1946		48275	Urbis	Axia 16 LED 350mA	19 Watts	8.00 Metres	Steel	
Y	9	STREET LIGHTING	FAIRFIELD ROAD	GRIMSBY	526291.05	405268.65	2019	03/10/2019	67629	Urbis	Teceo 32 LED 500mA	52 Watts	8.00 Metres	Galvanised Steel	
Y	10	STREET LIGHTING	FAIRFIELD ROAD	GRIMSBY	526277.44	405237.31	1946		48277	Urbis	Axia 16 LED 350mA	19 Watts	8.00 Metres	Steel	
Y	11	STREET LIGHTING	FAIRFIELD ROAD	GRIMSBY	526261	405218	2000		48278	Urbis	Axia 16 LED 350mA	19 Watts	8.00 Metres	Galvanised Steel	
Y	1	STREET LIGHTING	FALLOWFIELD ROAD	GRIMSBY	525800.72	405597.96	2016	13/09/2016	48362	1 Urbis LED	Teceo 16 LED 500mA	28 Watts	6.00 Metres	Galvanised Steel	
Y	2	STREET LIGHTING	FALLOWFIELD ROAD	GRIMSBY	525770.17	405587.09	2016	13/09/2016	48363	1 Urbis LED	Teceo 16 LED 500mA	28 Watts	6.00 Metres	Galvanised Steel	
Y	3	STREET LIGHTING	FALLOWFIELD ROAD	GRIMSBY	525736.84	405557.26	2016	13/09/2016	48364	1 Urbis LED	Teceo 16 LED 500mA	28 Watts	6.00 Metres	Galvanised Steel	
Y	4	STREET LIGHTING	FALLOWFIELD ROAD	GRIMSBY	525714.38	405536.64	2016	13/09/2016	48365	1 Urbis LED	Teceo 16 LED 500mA	28 Watts	6.00 Metres	Galvanised Steel	
Y	5	STREET LIGHTING	FALLOWFIELD ROAD	GRIMSBY	525689.52	405520.53	2016	13/09/2016	48366	1 Urbis LED	Teceo 16 LED 500mA	28 Watts	6.00 Metres	Galvanised Steel	
Y	6	STREET LIGHTING	FALLOWFIELD ROAD	GRIMSBY	525661.72	405503.32	2016	13/09/2016	48367	1 Urbis LED	Teceo 16 LED 500mA	28 Watts	6.00 Metres	Galvanised Steel	
Y	7	STREET LIGHTING	FALLOWFIELD ROAD	GRIMSBY	525639.81	405476.25	2016	13/09/2016	48368	1 Urbis LED	Teceo 16 LED 500mA	28 Watts	6.00 Metres	Galvanised Steel	
Y	8	STREET LIGHTING	FALLOWFIELD ROAD	GRIMSBY	525633.73	405442.19	2016	13/09/2016	48369	1 Urbis LED	Teceo 16 LED 500mA	28 Watts	6.00 Metres	Galvanised Steel	
Y	9	STREET LIGHTING	FALLOWFIELD ROAD	GRIMSBY	525624.71	405407.12	2016	13/09/2016	48370	1 Urbis LED	Teceo 16 LED 500mA	28 Watts	6.00 Metres	Galvanised Steel	
Y	10	STREET LIGHTING	FALLOWFIELD ROAD	GRIMSBY	525636.86	405374.25	2016	13/09/2016	48371	1 Urbis LED	Teceo 16 LED 500mA	28 Watts	6.00 Metres	Galvanised Steel	
Y	11	STREET LIGHTING	FALLOWFIELD ROAD	GRIMSBY	525652.14	405339.55	2016	13/09/2016	48372	1 Urbis LED	Teceo 16 LED 500mA	28 Watts	6.00 Metres	Galvanised Steel	
Y	12	STREET LIGHTING	FALLOWFIELD ROAD	GRIMSBY	525671.11	405311.65	2016	13/09/2016	48373	1 Urbis LED	Teceo 16 LED 500mA	28 Watts	6.00 Metres	Galvanised Steel	
Y	13	STREET LIGHTING	FALLOWFIELD ROAD	GRIMSBY	525685.65	405284.88	2016	13/09/2016	66971	1 Urbis LED	Teceo 16 LED 500mA	28 Watts	6.00 Metres	Galvanised Steel	
Y	14	STREET LIGHTING	FALLOWFIELD ROAD	GRIMSBY	525694.87	405266.34	2007		48374	1 Urbis LED	Teceo 16 LED 500mA	28 Watts	6.00 Metres	Steel	
Y	15	STREET LIGHTING	FALLOWFIELD ROAD	GRIMSBY	525702.26	405242.71	2007		48375	1 Urbis LED	Teceo 16 LED 500mA	28 Watts	6.00 Metres	Steel	
Y	16	STREET LIGHTING	FALLOWFIELD ROAD	GRIMSBY	525712.14	405226.42	2007		48376	1 Urbis LED	Teceo 16 LED 500mA	28 Watts	6.00 Metres	Steel	
Y	17	STREET LIGHTING	FALLOWFIELD ROAD	GRIMSBY	525722.67	405201.48	2007		48377	1 Urbis LED	Teceo 16 LED 500mA	28 Watts	6.00 Metres	Steel	
Y	1	STREET LIGHTING	FLEETWOOD CLOSE	GRIMSBY	526075.64	405244.4	2016	31/03/2016	48654	1 Urbis LED	Axia 16 LED 500mA	28 Watts	6.00 Metres	Galvanised Steel	
Y	1	STREET LIGHTING	GRAMPIAN WAY	GRIMSBY	526267.89	405915.92	2006		49418	1 Urbis LED	Axia 16 LED 500mA	28 Watts	6.00 Metres	Stainless Steel	
Y	2	STREET LIGHTING	GRAMPIAN WAY	GRIMSBY	526231.31	405904.97	2016	30/09/2016	49419	1 Urbis LED	Axia 16 LED 500mA	28 Watts	6.00 Metres	Galvanised Steel	
Y	3	STREET LIGHTING	GRAMPIAN WAY	GRIMSBY	526303.73	405950.97	2016	30/06/2016	66924	Urbis	Axia 16 LED 350mA	19 Watts	6.00 Metres	Steel	
Y	4	STREET LIGHTING	GRAMPIAN WAY	GRIMSBY	526202.57	405908.2	2016	30/06/2016	49420	Urbis	Axia 16 LED 350mA	19 Watts	6.00 Metres	Steel	
Y	1	STREET LIGHTING	HURFORD PLACE	GRIMSBY				02/06/2025	70212	Urbis	Axia 16 LED 500mA	28 Watts	6.00 Metres	Galvanised Steel	
Y	1	STREET LIGHTING	KIDDIER AVENUE	GRIMSBY	525963.65	405047.36	2017	30/06/2017	51588	Urbis	Axia 16 LED 350mA	19 Watts	6.00 Metres	Galvanised Steel	
Y	2	STREET LIGHTING	KIDDIER AVENUE	GRIMSBY	525943.22	405085.37	2017	30/06/2017	51589	Urbis	Axia 16 LED 350mA	19 Watts	6.00 Metres	Galvanised Steel	
Y	3	STREET LIGHTING	KIDDIER AVENUE	GRIMSBY	525928.92	405123.02	2017	30/06/2017	51590	Urbis	Axia 16 LED 350mA	19 Watts	6.00 Metres	Galvanised Steel	
Y	4	STREET LIGHTING	KIDDIER AVENUE	GRIMSBY	525897.74	405111.31	2017	30/06/2017	51591	Urbis	Axia 16 LED 350mA	19 Watts	6.00 Metres	Galvanised Steel	
Y	1	STREET LIGHTING	LANGDALE AVENUE	GRIMSBY	525909.11	405405.81	2016	14/10/2016	67993	Urbis	Axia 16 LED 350mA	19 Watts	6.00 Metres	Galvanised Steel	
Y	2	STREET LIGHTING	LANGDALE AVENUE	GRIMSBY	525873.51	405378.14	2016	14/10/2016	67994	Urbis	Axia 16 LED 350mA	19 Watts	6.00 Metres	Galvanised Steel	
Y	3	STREET LIGHTING	LANGDALE AVENUE	GRIMSBY	525853.81	405355.19	2016	14/10/2016	67995	Urbis	Axia 16 LED 350mA	19 Watts	6.00 Metres	Galvanised Steel	
Y	4	STREET LIGHTING	LANGDALE AVENUE	GRIMSBY	525834.28	405332.59	2016	14/10/2016	67996	Urbis	Axia 16 LED 350mA	19 Watts	6.00 Metres	Galvanised Steel	
Y	5	STREET LIGHTING	LANGDALE AVENUE	GRIMSBY	525808.61	405303.31	2016	14/10/2016	67997	Urbis	Axia 16 LED 350mA	19 Watts	6.00 Metres	Galvanised Steel	
Y	6	STREET LIGHTING	LANGDALE AVENUE	GRIMSBY	525791.62	405280.53	2016	14/10/2016	67998	Urbis	Axia 16 LED 350mA	19 Watts	6.00 Metres	Galvanised Steel	
Y	7	STREET LIGHTING	LANGDALE AVENUE	GRIMSBY	525805.72	405249.81	2016	14/10/2016	67999	Urbis	Axia 16 LED 350mA	19 Watts	6.00 Metres	Galvanised Steel	
Y	8	STREET LIGHTING	LANGDALE AVENUE	GRIMSBY	525821.99	405221.79	2016	14/10/2016	68000	Urbis	Axia 16 LED 350mA	19 Watts	6.00 Metres	Galvanised Steel	
Y	1	STREET LIGHTING	LARDEN AVENUE	GRIMSBY	526008.89	405506.52	1988		52347	Urbis	Axia 16 LED 350mA	19 Watts	5.00 Metres	Galvanised Steel	
Y	2	STREET LIGHTING	LARDEN AVENUE	GRIMSBY	526032.94	405482.85	2015	30/07/2015	52348	Urbis	Axia 16 LED 350mA	19 Watts	6.00 Metres	Galvanised Steel	
Y	3	STREET LIGHTING	LARDEN AVENUE	GRIMSBY	526054	405471	2002		52349	Urbis	Axia 16 LED 350mA	19 Watts	5.00 Metres	Stainless Steel	
Y	4	STREET LIGHTING	LARDEN AVENUE	GRIMSBY	526072	405452	2002		52350	Urbis	Axia 16 LED 350mA	19 Watts	5.00 Metres	Stainless Steel	
Y	5	STREET LIGHTING	LARDEN AVENUE	GRIMSBY	526084.83	405428.3	2015	30/07/2015	52351	Urbis	Axia 16 LED 350mA	19 Watts	6.00 Metres	Galvanised Steel	
Y	1	STREET LIGHTING	LAVENHAM ROAD	GRIMSBY	525814.03	405655.85	2004		52401	1 Urbis LED	Teceo 32 LED 500mA	52 Watts	8.00 Metres	Stainless Steel	
Y	2	STREET LIGHTING	LAVENHAM ROAD	GRIMSBY	525805.01	405646.83	2012	06/08/2012	52400	1 Urbis LED	Teceo 32 LED 500mA	52 Watts	8.00 Metres	Galvanised Steel	
Y	3	STREET LIGHTING	LAVENHAM ROAD	GRIMSBY	525811.11	405625.55	2019	01/11/2019	67704	Urbis	Teceo 32 LED 500mA	52 Watts	8.00 Metres	Galvanised Steel	
Y	4	STREET LIGHTING	LAVENHAM ROAD	GRIMSBY	525828.21	405601.81	2004		52398	1 Urbis LED	Teceo 32 LED 500mA	52 Watts	8.00 Metres	Stainless Steel	
Y	5	STREET LIGHTING	LAVENHAM ROAD	GRIMSBY	525823.79	405579.63	2004		52397	1 Urbis LED	Teceo 32 LED 500mA	52 Watts	8.00 Metres	Stainless Steel	
Y	6	STREET LIGHTING	LAVENHAM ROAD	GRIMSBY	525849.2	405547.5	2008		52396	1 Urbis LED	Teceo 32 LED 500mA	52 Watts	8.00 Metres	Steel	
Y	7	STREET LIGHTING	LAVENHAM ROAD	GRIMSBY	525853.06	405510.58	1966		52395	1 Urbis LED	Teceo 32 LED 500mA	52 Watts	8.00 Metres	Steel	
Y	8	STREET LIGHTING	LAVENHAM ROAD	GRIMSBY				30/05/2025	70223	Urbis	Teceo 32 LED 500mA	52 Watts	8.00 Metres	Galvanised Steel	
Y	9	STREET LIGHTING	LAVENHAM ROAD	GRIMSBY	525893.2	405465.29	2008		52393	1 Urbis LED	Teceo 32 LED 500mA	52 Watts	8.00 Metres	Steel	
Y	10	STREET LIGHTING	LAVENHAM ROAD	GRIMSBY	525905.33	405431.54	2008		52392	1 Urbis LED	Teceo 32 LED 500mA	52 Watts	8.00 Metres	Steel	
Y	11	STREET LIGHTING	LAVENHAM ROAD	GRIMSBY	525931.5	405415.58	2016		52391	1 Urbis LED	Teceo 32 LED 500mA	52 Watts	8.00 Metres	Galvanised Steel	
Y	12	STREET LIGHTING	LAVENHAM ROAD	GRIMSBY	525944.94	405381.43	1966		52390	1 Urbis LED	Teceo 32 LED 500mA	52 Watts	8.00 Metres	Steel	
Y	14	STREET LIGHTING	LAVENHAM ROAD	GRIMSBY	525981.94	405333.19	1964		52388	1 Urbis LED	Teceo 32 LED 500mA	52 Watts	8.00 Metres	Steel	
Y	1	STREET LIGHTING	FOOTPATH BETWEEN LAVENHAM	GRIMSBY	525876.45	405588.28	2015	26/10/2015	48759	Urbis	Axia 8 LED 350mA	10 Watts	6.00 Metres	Steel	
Y	2	STREET LIGHTING	FOOTPATH BETWEEN LAVENHAM	GRIMSBY	525851.41	405575.67	2015	26/10/2015	48760	Urbis	Axia 8 LED 350mA	10 Watts	6.00 Metres	Steel	
Y	1	STREET LIGHTING	LINDSEY RISE	GRIMSBY	526774.48	405891.2	1998		52577	Urbis	Axia 16 LED 350mA	19 Watts	5.00 Metres	Galvanised Steel	
Y	2	STREET LIGHTING	LINDSEY RISE	GRIMSBY	526749.07	405875.55	1998		52578	Urbis	Axia 16 LED 350mA	19 Watts	5.00 Metres	Galvanised Steel	
Y	3	STREET LIGHTING	LINDSEY RISE	GRIMSBY	526725.32	405860.55	1998		52579	Urbis	Axia 16 LED 350mA	19 Watts	5.00 Metres	Galvanised Steel	
Y	4	STREET LIGHTING	LINDSEY RISE	GRIMSBY	526707.27	405853.09	1998		52580	Urbis	Axia 16 LED 350mA	19 Watts	5.00 Metres	Galvanised Steel	
Y	1	STREET LIGHTING	PURBECK ROAD	GRIMSBY	526344.49	405634.91	1963		55698	Urbis	Axia 16 LED 350mA	19 Watts	5.00 Metres	Steel	
Y	2	STREET LIGHTING	PURBECK ROAD	GRIMSBY	526362.84	405606.81	1963		55699	Urbis	Axia 16 LED 350mA	19 Watts	5.00 Metres	Steel	
Y	3	STREET LIGHTING	PURBECK ROAD	GRIMSBY	526375.62	405585.54	1963		55700	Urbis	Axia 16 LED 350mA	19 Watts	5.00 Metres	Steel	
Y	4	STREET LIGHTING	PURBECK ROAD	GRIMSBY	526389.8	405554.4	1963		55701	Urbis	Axia 16 LED 350mA	19 Watts	5.00 Metres	Steel	
Y	1	STREET LIGHTING	MENDIP AVENUE	GRIMSBY	526526.57	405619.01	2016	30/09/2016	53529	1 Urbis LED	Teceo 24 LED 500mA	40 Watts	6.00 Metres	Galvanised Steel	
Y	2	STREET LIGHTING	MENDIP AVENUE	GRIMSBY	526491.63	405624.39	2016	30/09/2016	53530	1 Urbis LED	Teceo 24 LED 500mA	40 Watts	6.00 Metres	Galvanised Steel	

Y	3	STREET LIGHTING	MENDIP AVENUE	GRIMSBY	526458.68	405629	2021	06/12/2021	68787	Urbis	Teceo 24 LED 500mA	40 Watts	6.00 Metres	Galvanised Steel	
Y	4	STREET LIGHTING	MENDIP AVENUE	GRIMSBY	526424.29	405640.41	2016	30/09/2016	53532	1 Urbis LED	Teceo 24 LED 500mA	40 Watts	6.00 Metres	Galvanised Steel	
Y	5	STREET LIGHTING	MENDIP AVENUE	GRIMSBY	526429.99	405677.62	2016	30/06/2016	53533	1 Urbis LED	Teceo 24 LED 500mA	40 Watts	6.00 Metres	Steel	
Y	6	STREET LIGHTING	MENDIP AVENUE	GRIMSBY	526398.98	405658	2016	30/09/2016	53534	1 Urbis LED	Teceo 24 LED 500mA	40 Watts	6.00 Metres	Galvanised Steel	
Y	7	STREET LIGHTING	MENDIP AVENUE	GRIMSBY	526385.31	405687.56	2016	30/09/2016	53535	1 Urbis LED	Teceo 24 LED 500mA	40 Watts	6.00 Metres	Galvanised Steel	
Y	8	STREET LIGHTING	MENDIP AVENUE	GRIMSBY	526365.21	405709.32	2016	30/09/2016	53536	1 Urbis LED	Teceo 24 LED 500mA	40 Watts	6.00 Metres	Galvanised Steel	
Y	9	STREET LIGHTING	MENDIP AVENUE	GRIMSBY	526359.13	405739.26	1963		53537	1 Urbis LED	Teceo 24 LED 500mA	40 Watts	6.00 Metres	Steel	
Y	10	STREET LIGHTING	MENDIP AVENUE	GRIMSBY	526335.19	405764.6	2016	30/09/2016	53538	1 Urbis LED	Teceo 24 LED 500mA	40 Watts	6.00 Metres	Galvanised Steel	
Y	11	STREET LIGHTING	MENDIP AVENUE	GRIMSBY	526331.16	405792.69	2011		53539	1 Urbis LED	Teceo 24 LED 500mA	40 Watts	6.00 Metres	Steel	
Y	12	STREET LIGHTING	MENDIP AVENUE	GRIMSBY	526312.91	405813.46	2016	30/09/2016	53540	1 Urbis LED	Teceo 24 LED 500mA	40 Watts	6.00 Metres	Galvanised Steel	
Y	13	STREET LIGHTING	MENDIP AVENUE	GRIMSBY	526310.88	405842	2016	30/09/2016	53541	1 Urbis LED	Teceo 24 LED 500mA	40 Watts	6.00 Metres	Galvanised Steel	
Y	14	STREET LIGHTING	MENDIP AVENUE	GRIMSBY	526294.3	405870.93	2016	30/09/2016	53542	1 Urbis LED	Teceo 24 LED 500mA	40 Watts	6.00 Metres	Galvanised Steel	
Y	15	STREET LIGHTING	MENDIP AVENUE	GRIMSBY	526287.34	405921.06	2016	30/09/2016	53543	1 Urbis LED	Teceo 24 LED 500mA	40 Watts	6.00 Metres	Galvanised Steel	
Y	16	STREET LIGHTING	MENDIP AVENUE	GRIMSBY	526272.46	405946.66	2003		53544	1 Urbis LED	Teceo 24 LED 500mA	40 Watts	6.00 Metres	Stainless Steel	
Y	17	STREET LIGHTING	MENDIP AVENUE	GRIMSBY	526271.67	405977.45	2016	30/06/2016	53545	1 Urbis LED	Teceo 24 LED 500mA	40 Watts	6.00 Metres	Steel	
Y	18	STREET LIGHTING	MENDIP AVENUE	GRIMSBY	526302.15	405973.09	2021	03/12/2021	68788	Urbis	Teceo 24 LED 500mA	40 Watts	6.00 Metres	Galvanised Steel	
Y	19	STREET LIGHTING	MENDIP AVENUE	GRIMSBY	526335.44	405968.02	2016	30/09/2016	53547	1 Urbis LED	Teceo 24 LED 500mA	40 Watts	6.00 Metres	Galvanised Steel	
Y	20	STREET LIGHTING	MENDIP AVENUE	GRIMSBY	526321.9	405995.42	2016	30/09/2016	53548	1 Urbis LED	Teceo 24 LED 500mA	40 Watts	6.00 Metres	Galvanised Steel	
Y	21	STREET LIGHTING	MENDIP AVENUE	GRIMSBY	526321.01	406028.46	1992		53549	1 Urbis LED	Teceo 24 LED 500mA	40 Watts	5.00 Metres	Galvanised Steel	
Y	1	STREET LIGHTING	MENDIP AVENUE SCHOOL ACCESS	GRIMSBY	526308.1	405779.47	2016	30/09/2016	53553	1 Urbis LED	Axia 16 LED 500mA	28 Watts	6.00 Metres	Galvanised Steel	
Y	1	STREET LIGHTING	MENDIP AVENUE GARAGE AREA	GRIMSBY	526431.91	405617.32	2010		53550	1 Urbis LED	Axia 16 LED 500mA	28 Watts	6.00 Metres	Steel	
Y	2	STREET LIGHTING	MENDIP AVENUE GARAGE AREA	GRIMSBY	526437.67	405604.98	2010		53551	1 Urbis LED	Axia 16 LED 500mA	28 Watts	6.00 Metres	Steel	
Y	3	STREET LIGHTING	MENDIP AVENUE GARAGE AREA	GRIMSBY	526423.31	405605.68	2010		53552	1 Urbis LED	Axia 16 LED 500mA	28 Watts	6.00 Metres	Steel	
Y	1	STREET LIGHTING	OXCOMBE CLOSE	GRIMSBY	525600.03	405445.23	2016	31/03/2016	54527	1 Urbis LED	Axia 16 LED 500mA	28 Watts	6.00 Metres	Galvanised Steel	
Y	1	STREET LIGHTING	PAIGNTON COURT	GRIMSBY	526404.04	404912.39	2020	01/07/2020	67886	Urbis	Axia 16 LED 350mA	19 Watts	6.00 Metres	Galvanised Steel	
Y	2	STREET LIGHTING	PAIGNTON COURT	GRIMSBY	526401.51	404873.94	2020	01/07/2020	68174	Urbis	Axia 16 LED 350mA	19 Watts	6.00 Metres	Galvanised Steel	
Y	1	STREET LIGHTING	QUANTOCK ROAD	GRIMSBY	526372.87	405673.58	2003		55735	Urbis	Axia 16 LED 350mA	19 Watts	6.00 Metres	Stainless Steel	
Y	2	STREET LIGHTING	QUANTOCK ROAD	GRIMSBY	526346.36	405668.06	1963		55736	Urbis	Axia 16 LED 350mA	19 Watts	5.00 Metres	Steel	
Y	3	STREET LIGHTING	QUANTOCK ROAD	GRIMSBY	526327.21	405641.46	1963		55737	Urbis	Axia 16 LED 350mA	19 Watts	5.00 Metres	Steel	
Y	4	STREET LIGHTING	QUANTOCK ROAD	GRIMSBY	526318.56	405613.75	1963		55738	Urbis	Axia 16 LED 350mA	19 Watts	5.00 Metres	Steel	
Y	5	STREET LIGHTING	QUANTOCK ROAD	GRIMSBY	526293.7	405593.96	1963		55739	Urbis	Axia 16 LED 350mA	19 Watts	5.00 Metres	Steel	
Y	6	STREET LIGHTING	QUANTOCK ROAD	GRIMSBY	526276.4	405566.8	1963		55740	Urbis	Axia 16 LED 350mA	19 Watts	5.00 Metres	Steel	
Y	7	STREET LIGHTING	QUANTOCK ROAD	GRIMSBY	526298.31	405564.59	1963		55741	Urbis	Axia 16 LED 350mA	19 Watts	5.00 Metres	Steel	
Y	1	STREET LIGHTING	RIVAN AVENUE	GRIMSBY	526288.55	405102.3	1995		56123	Urbis	Axia 16 LED 350mA	19 Watts	5.00 Metres	Steel	
Y	2	STREET LIGHTING	RIVAN AVENUE	GRIMSBY	526259.46	405109.11	1995		56124	Urbis	Axia 16 LED 350mA	19 Watts	5.00 Metres	Steel	
Y	3	STREET LIGHTING	RIVAN AVENUE	GRIMSBY	526248.6	405083.43	1995		56125	Urbis	Axia 16 LED 350mA	19 Watts	5.00 Metres	Steel	
Y	4	STREET LIGHTING	RIVAN AVENUE	GRIMSBY	526257.25	405054.7	1995		56126	Urbis	Axia 16 LED 350mA	19 Watts	5.00 Metres	Steel	
Y	1	STREET LIGHTING	RIVAN GROVE	GRIMSBY	526234.05	405039.51	1986		56127	Urbis	Axia 16 LED 350mA	19 Watts	5.00 Metres	Steel	
Y	1	STREET LIGHTING	RYDAL AVENUE	GRIMSBY	525938.08	405262.12	2017	30/06/2017	56447	Urbis	Axia 16 LED 350mA	19 Watts	6.00 Metres	Galvanised Steel	
Y	2	STREET LIGHTING	RYDAL AVENUE	GRIMSBY	525954.55	405236.61	2017	30/06/2017	56448	Urbis	Axia 16 LED 350mA	19 Watts	6.00 Metres	Galvanised Steel	
Y	3	STREET LIGHTING	RYDAL AVENUE	GRIMSBY	525977.68	405215.72	1996		56449	Urbis	Axia 16 LED 350mA	19 Watts	5.00 Metres	Galvanised Steel	
Y	4	STREET LIGHTING	RYDAL AVENUE	GRIMSBY	526006.92	405174.27	2017	30/06/2017	56450	Urbis	Axia 16 LED 350mA	19 Watts	6.00 Metres	Galvanised Steel	
Y	5	STREET LIGHTING	RYDAL AVENUE	GRIMSBY	526027.94	405143.19	2014		56451	Urbis	Axia 16 LED 350mA	19 Watts	6.00 Metres	Galvanised Steel	
Y	6	STREET LIGHTING	RYDAL AVENUE	GRIMSBY	526049.49	405114.46	2017	30/06/2017	56452	Urbis	Axia 16 LED 350mA	19 Watts	6.00 Metres	Galvanised Steel	
Y	1	STREET LIGHTING	SOUTHWOLD CRESCENT	GRIMSBY	526362.02	405784.8	2016	20/12/2016	68470	Urbis	Axia 16 LED 500mA	28 Watts	6.00 Metres	Galvanised Steel	
Y	2	STREET LIGHTING	SOUTHWOLD CRESCENT	GRIMSBY	526387.98	405798.69	2016	20/12/2016	68471	Urbis	Axia 16 LED 500mA	28 Watts	6.00 Metres	Galvanised Steel	
Y	3	STREET LIGHTING	SOUTHWOLD CRESCENT	GRIMSBY	526425.54	405810.2	2016	20/12/2016	68472	Urbis	Axia 16 LED 500mA	28 Watts	6.00 Metres	Galvanised Steel	
Y	4	STREET LIGHTING	SOUTHWOLD CRESCENT	GRIMSBY	526447.66	405837.85	2016	20/12/2016	68473	Urbis	Axia 16 LED 500mA	28 Watts	6.00 Metres	Galvanised Steel	
Y	5	STREET LIGHTING	SOUTHWOLD CRESCENT	GRIMSBY	526481.41	405829.32	2016	20/12/2016	68474	Urbis	Axia 16 LED 500mA	28 Watts	6.00 Metres	Steel	
Y	6	STREET LIGHTING	SOUTHWOLD CRESCENT	GRIMSBY	526448.05	405879.29	2016	20/12/2016	68475	Urbis	Axia 16 LED 500mA	28 Watts	6.00 Metres	Galvanised Steel	
Y	7	STREET LIGHTING	SOUTHWOLD CRESCENT	GRIMSBY	526429.99	405909.58	2016	20/12/2016	68476	Urbis	Axia 16 LED 500mA	28 Watts	6.00 Metres	Galvanised Steel	
Y	8	STREET LIGHTING	SOUTHWOLD CRESCENT	GRIMSBY	526422.5	405948.46	2016	20/12/2016	68477	Urbis	Axia 16 LED 500mA	28 Watts	6.00 Metres	Galvanised Steel	
Y	9	STREET LIGHTING	SOUTHWOLD CRESCENT	GRIMSBY	526402.06	406000.35	2016	20/12/2016	68478	Urbis	Axia 16 LED 500mA	28 Watts	6.00 Metres	Galvanised Steel	
Y	10	STREET LIGHTING	SOUTHWOLD CRESCENT	GRIMSBY	526424.38	406002.34	2016	20/12/2016	68480	Urbis	Axia 16 LED 500mA	28 Watts	6.00 Metres	Steel	
Y	11	STREET LIGHTING	SOUTHWOLD CRESCENT	GRIMSBY	526366.55	405989.64	2016	20/12/2016	68479	Urbis	Axia 16 LED 500mA	28 Watts	6.00 Metres	Galvanised Steel	
Y	1	STREET LIGHTING	SPRINGFIELD ROAD	GRIMSBY	526458.83	406104.44	2004		57508	1 Urbis LED	Teceo 40 LED 500mA	64 Watts	8.00 Metres	Stainless Steel	
Y	2	STREET LIGHTING	SPRINGFIELD ROAD	GRIMSBY	526419.61	406099.01	1998		57509	1 Urbis LED	Teceo 40 LED 500mA	64 Watts	8.00 Metres	Galvanised Steel	
Y	3	STREET LIGHTING	SPRINGFIELD ROAD	GRIMSBY	526384.63	406072.04	1998		57510	1 Urbis LED	Teceo 40 LED 500mA	64 Watts	8.00 Metres	Galvanised Steel	
Y	4	STREET LIGHTING	SPRINGFIELD ROAD	GRIMSBY	526345.78	406065.14	1998		57511	1 Urbis LED	Teceo 40 LED 500mA	64 Watts	8.00 Metres	Galvanised Steel	
Y	5	STREET LIGHTING	SPRINGFIELD ROAD	GRIMSBY	526309.51	406050.68	1998		57512	1 Urbis LED	Teceo 40 LED 500mA	64 Watts	8.00 Metres	Galvanised Steel	
Y	6	STREET LIGHTING	SPRINGFIELD ROAD	GRIMSBY	526269.19	406037.15	1998		57513	1 Urbis LED	Teceo 40 LED 500mA	64 Watts	8.00 Metres	Galvanised Steel	
Y	7	STREET LIGHTING	SPRINGFIELD ROAD	GRIMSBY	526235.86	406026.2	1998		57514	1 Urbis LED	Teceo 40 LED 500mA	64 Watts	8.00 Metres	Galvanised Steel	
Y	8	STREET LIGHTING	SPRINGFIELD ROAD	GRIMSBY	526197.02	406014.14	1998		57515	1 Urbis LED	Teceo 48 LED 500mA	79 Watts	8.00 Metres	Galvanised Steel	
Y	9	STREET LIGHTING	SPRINGFIELD ROAD	GRIMSBY	526156.88	405993.15	1998		57516	1 Urbis LED	Teceo 48 LED 500mA	79 Watts	8.00 Metres	Galvanised Steel	
Y	10	STREET LIGHTING	SPRINGFIELD ROAD	GRIMSBY	526127.05	405965.99	1998		57517	1 Urbis LED	Teceo 40 LED 500mA	64 Watts	8.00 Metres	Galvanised Steel	
Y	11	STREET LIGHTING	SPRINGFIELD ROAD	GRIMSBY	526097.78	405939.02	1998		57518	1 Urbis LED	Teceo 40 LED 500mA	64 Watts	8.00 Metres	Galvanised Steel	
Y	12	STREET LIGHTING	SPRINGFIELD ROAD	GRIMSBY	526066.66	405910.76	1998		57519	1 Urbis LED	Teceo 40 LED 500mA	64 Watts	8.00 Metres	Galvanised Steel	
Y	13	STREET LIGHTING	SPRINGFIELD ROAD	GRIMSBY	526036.28	405883.97	1998		57520	1 Urbis LED	Teceo 40 LED 500mA	64 Watts	8.00 Metres	Galvanised Steel	
Y	14	STREET LIGHTING	SPRINGFIELD ROAD	GRIMSBY	526011.79	405847.24	1998		57521	1 Urbis LED	Teceo 40 LED 500mA	64 Watts	8.00 Metres	Galvanised Steel	
Y	15	STREET LIGHTING	SPRINGFIELD ROAD	GRIMSBY	525978.47	405831.5	1998		57522	Urbis	AXIA 3.2 32 LED 510mA	50 Watts	8.00 Metres	Galvanised Steel	
Y	16	STREET LIGHTING	SPRINGFIELD ROAD	GRIMSBY	525956.74	405796.98	1998		57523	1 Urbis LED	Teceo 40 LED 500mA	64 Watts	8.00 Metres	Galvanised Steel	
Y	17	STREET LIGHTING	SPRINGFIELD ROAD	GRIMSBY	525924.89	405768.16	1998		57524	1 Urbis LED	Teceo 40 LED 500mA	64 Watts	8.00 Metres	Galvanised Steel	
Y	18	STREET LIGHTING	SPRINGFIELD ROAD	GRIMSBY	525893.22	405739.17	1998		57525	1 Urbis LED	Teceo 40 LED 500mA	64 Watts	8.00 Metres	Galvanised Steel	
Y	19	STREET LIGHTING	SPRINGFIELD ROAD	GRIMSBY	525864.13	405712.93	1998		57526	1 Urbis LED	Teceo 40 LED 500mA	64 Watts	8.00 Metres	Galvanised Steel	
Y	20	STREET LIGHTING	SPRINGFIELD ROAD	GRIMSBY	525824.18	405689.46	1998		57527	1 Urbis LED	Teceo 40 LED 500mA	64 Watts	8.00 Metres	Galvanised Steel	
Y	21	STREET LIGHTING	SPRINGFIELD ROAD	GRIMSBY	525811.47	405665.52	1998		57528	1 Urbis LED	Teceo 40 LED 500mA	64 Watts	8.00 Metres	Galvanised Steel	
Y	22	STREET LIGHTING	SPRINGFIELD ROAD	GRIMSBY	525789.19	405644.99	1998		57529	1 Urbis LED	Teceo 40 LED 500mA	64 Watts	8.00 Metres	Galvanised Steel	
Y	23	STREET LIGHTING	SPRINGFIELD ROAD	GRIMSBY	525763.84	405637.9	1998		57530	1 Urbis LED	Teceo 40 LED 500mA	64 Watts	8.00 Metres	Galvanised Steel	
Y	24	STREET LIGHTING	SPRINGFIELD ROAD	GRIMSBY	525732.57	405649.35	1995		57531	1 Urbis LED	Teceo 40 LED 500mA	64 Watts	8.00 Metres	Galvanised Steel	
Y	25	STREET LIGHTING	SPRINGFIELD ROAD	GRIMSBY	525713.08	405673.21	1995		57532	1 Urbis LED	Teceo 40 LED 500mA	64 Watts	8.00 Metres	Galvanised Steel	
Y	26	STREET LIGHTING	SPRINGFIELD ROAD	GRIMSBY	525708.52	405697.2	1995		57533	1 Urbis LED	Teceo 40 LED 500mA	64 Watts	8.00 Metres	Galvanised Steel	
Y	27	STREET LIGHTING	SPRINGFIELD ROAD	GRIMSBY	525746.02	405614.68	2014		62730	Urbis	Axia 8 LED 350mA	10 Watts	6.00 Metres	Galvanised Steel	
Y	1	STREET LIGHTING	SPRINGWOOD CRESCENT	GRIMSBY	525700.88	405498.63	2016	21/09/2016	68481	Urbis	Axia 16 LED 350mA	19 Watts	6.00 Metres	Galvanised Steel	
Y	2	STREET LIGHTING	SPRINGWOOD CRESCENT	GRIMSBY	525722.25	405473.11	2016	21/09/2016	68482	Urbis	Axia 16 LED 350mA	19 Watts	6.00 Metres	Galvanised Steel	
Y	3	STREET LIGHTING	SPRINGWOOD CRESCENT	GRIMSBY	525717.91	405443.84	2016	21/09/2016	68483	Urbis	Axia 16 LED 350mA	19 Watts	6.00 Metres	Galvanised Steel	
Y	4	STREET LIGHTING	SPRINGWOOD CRESCENT	GRIMSBY	525710.27	405422.89	2016	21/09/2016	68484	Urbis	Axia 16 LED 350mA	19 Watts	6.00 Metres	Galvanised Steel	
Y	5	STREET LIGHTING	SPRINGWOOD CRESCENT	GRIMSBY	525684.94	405410.3	2016	21/09/2016	68485	Urbis	Axia 16 LED 350mA	19 Watts	6.00 Metres	Galvanised Steel	
Y	6	STREET LIGHTING	SPRINGWOOD CRESCENT	GRIMSBY	525659.44	405380.75	2016	21/09/2016	68486	Urbis	Axia 16 LED 350mA	19 Watts	6.00 Metres	Galvanised Steel	
Y	1	STREET LIGHTING	TAUNTON WAY	GRIMSBY	526484.82	405648.19	2003		58756	Urbis	Axia 8 LED 350mA	10 Watts	6.00 Metres	Stainless Steel	
Y	2	STREET LIGHTING	TAUNTON WAY	GRIMSBY	526499.54	405655.31	2003		58757	1 Urbis LED	Axia 16 LED 500mA	28 Watts	6.00 Metres	Stainless Steel	
Y	3	STREET LIGHTING	TAUNTON WAY	GRIMSBY	526489.5	405676.57	2003		58758	Urbis	Axia 8 LED 350mA	10 Watts	6.00 Metres	Stainless Steel	
Y	4	STREET LIGHTING	TAUNTON WAY	GRIMSBY	526505.98	405693.14	2003		58759	1 Urbis LED	Axia 16 LED 500mA	28 Watts	6.00 Metres	Stainless Steel	
Y	5	STREET LIGHTING	TAUNTON WAY	GRIMSBY	526487.55	405710.32	2003		58760	Urbis	Axia 8 LED 350mA	10 Watts	6.00 Metres	Stainless Steel	
Y	6	STREET LIGHTING	TAUNTON WAY	GRIMSBY	526509.99	405723.29	2003		58761	Urbis	Axia 8 LED 350mA	10 Watts	6.00 Metres	Stainless Steel	
Y	7	STREET LIGHTING	TAUNTON WAY	GRIMSBY	526496.16	405732.35	2003		58762	Urbis	Axia 8 LED 350mA	10 Watts	6.00 Metres	Stainless Steel	
Y	1	STREET LIGHTING	THIRLMERE AVENUE	GRIMSBY	526167.04	405190.85	2016	17/03/2016	68493	Urbis	Axia 16 LED 500mA	28 Watts	6.00 Metres	Galvanised Steel	
Y	2	STREET LIGHTING	THIRLMERE AVENUE	GRIMSBY	526150.59	405214.06	2016	17/03/2016	68494	Urbis	Axia 16 LED 500mA	28 Watts	6.00 Metres	Galvanised Steel	
Y	3	STREET LIGHTING	THIRLMERE AVENUE	GRIMSBY	526130.5	405227.31	2016	17/03/2016	68495	Urbis	Axia 16 LED 500mA	28 Watts	6.00 Metres	Galvanised Steel	
Y	4	STREET LIGHTING	THIRLMERE AVENUE	GRIMSBY	526112.1	405267.6	2002		59089	1 Urbis LED	Axia 16 LED 500mA	28 Watts	6.00 Metres	Stainless Steel	
Y	5	STREET LIGHTING	THIRLMERE AVENUE	GRIMSBY	526080.57	405298.42	2016	17/03/2016	68496	Urbis	Axia 16 LED 500mA	28 Watts	6.00 Metres	Galvanised Steel	
Y	6	STREET LIGHTING	THIRLMERE AVENUE	GRIMSBY	526100.13	405305.63	2016	17/03/2016	68497	Urbis	Axia 16 LED 500mA	28 Watts	6.00 Metres	Galvanised Steel	
Y	7	STREET LIGHTING	THIRLMERE AVENUE	GRIMSBY	526069.22	405332.1	2016	17/03/2016	68498	Urbis	Axia 16 LED 500mA	28 Watts	6.00 Metres	Galvanised Steel	
Y	1	STREET LIGHTING	TONBRIDGE WALK	GRIMSBY	526151.7	405934.42	2016	01/12/2016	68500	Urbis	Axia 16 LED 350mA	19 Watts	6.00 Metres	Galvanised Steel	
Y	2	STREET LIGHTING	TONBRIDGE WALK	GRIMSBY	526164.55	405898.03	2016	01/12/2016	68814	Urbis	Axia 16 LED 350mA	19 Watts	6.00 Metres	Galvanised Steel	
Y	3	STREET LIGHTING	TONBRIDGE WALK	GRIMSBY	526141.22	405888.89	2016	01/12/2016	68815	Urbis	Axia 16 LED 350mA	19 Watts	6.00 Metres	Galvanised Steel	
Y	4	STREET LIGHTING	TONBRIDGE WALK	GRIMSBY	526154.74	405872.07	2008		59285	Urbis	Axia 16 LED 350mA	19 Watts	6.00 Metres	Galvanised Steel	
Y	5	STREET LIGHTING	TONBRIDGE WALK	GRIMSBY	526149.53	405856.12	2008		59286	Urbis	Axia 16 LED 350mA	19 Watts	6.00 Metres	Galvanised Steel	
Y	6	STREET LIGHTING	TONBRIDGE WALK	GRIMSBY	526164.01	405840.04	2008		59287	Urbis	Axia 16 LED 350mA	19 Watts	6.00 Metres	Galvanised Steel	
Y	7	STREET LIGHTING	TONBRIDGE WALK	GRIMSBY	526170.38	405823.22	2008		59288	Urbis	Axia 16 LED 350mA	19 Watts	6.00 Metres	Galvanised Steel	
Y	8	STREET LIGHTING	TONBRIDGE WALK	GRIMSBY	526167.58	405798.19	2008		59289	Urbis	Axia 16 LED 350mA	19 Watts	6.00 Metres	Galvanised Steel	

Y	9	STREET LIGHTING	TONBRIDGE WALK	GRIMSBY	526174.31	405778.32	2016	01/12/2016	68816	Urbis	Axia 16 LED 350mA	19 Watts	6.00 Metres	Galvanised Steel	
Y	1	STREET LIGHTING	TORBAY DRIVE	GRIMSBY	526472.48	404879.91	2020	09/07/2020	67892	Urbis	Axia 16 LED 350mA	19 Watts	6.00 Metres	Galvanised Steel	
Y	2	STREET LIGHTING	TORBAY DRIVE	GRIMSBY	526474.18	404912.96	2020	09/07/2020	68175	Urbis	Axia 16 LED 350mA	19 Watts	6.00 Metres	Galvanised Steel	
Y	3	STREET LIGHTING	TORBAY DRIVE	GRIMSBY	526467.71	404939.88	2020	09/07/2020	68176	Urbis	Axia 16 LED 350mA	19 Watts	6.00 Metres	Galvanised Steel	
Y	4	STREET LIGHTING	TORBAY DRIVE	GRIMSBY	526441.82	404938.01	2020	09/07/2020	68177	Urbis	Axia 16 LED 350mA	19 Watts	6.00 Metres	Galvanised Steel	
Y	5	STREET LIGHTING	TORBAY DRIVE	GRIMSBY	526417.97	404939.71	2020	09/07/2020	68178	Urbis	Axia 16 LED 350mA	19 Watts	6.00 Metres	Galvanised Steel	
Y	6	STREET LIGHTING	TORBAY DRIVE	GRIMSBY	526395.99	404931.87	2020	09/07/2020	68179	Urbis	Axia 16 LED 350mA	19 Watts	6.00 Metres	Galvanised Steel	
Y	7	STREET LIGHTING	TORBAY DRIVE	GRIMSBY	526364.99	404913.47	2020	09/07/2020	68180	Urbis	Axia 16 LED 350mA	19 Watts	6.00 Metres	Galvanised Steel	
Y	8	STREET LIGHTING	TORBAY DRIVE	GRIMSBY	526332.28	404912.96	2020	09/07/2020	68181	Urbis	Axia 16 LED 350mA	19 Watts	6.00 Metres	Galvanised Steel	
Y	9	STREET LIGHTING	TORBAY DRIVE	GRIMSBY	526310.65	404896.27	2020	09/07/2020	68182	Urbis	Axia 16 LED 350mA	19 Watts	6.00 Metres	Galvanised Steel	
Y	10	STREET LIGHTING	TORBAY DRIVE	GRIMSBY	526270.41	404893.37	2017	28/09/2017	59321	Urbis	Axia 16 LED 350mA	19 Watts	6.00 Metres	Galvanised Steel	
Y	11	STREET LIGHTING	TORBAY DRIVE	GRIMSBY	526238.25	404877.7	2020	09/07/2020	68183	Urbis	Axia 16 LED 500mA	28 Watts	6.00 Metres	Galvanised Steel	
Y	1	STREET LIGHTING	TOTNES ROAD	GRIMSBY	526351.66	404968.11	2020	30/06/2020	67893	Urbis	Axia 16 LED 350mA	19 Watts	6.00 Metres	Galvanised Steel	
Y	2	STREET LIGHTING	TOTNES ROAD	GRIMSBY	526354.19	404930.93	2020	30/06/2020	68184	Urbis	Axia 16 LED 350mA	19 Watts	6.00 Metres	Galvanised Steel	
Y	1	STREET LIGHTING	WALESBY CLOSE	GRIMSBY	525753.13	405541.55	2015	30/07/2015	59697	Urbis	Axia 16 LED 350mA	19 Watts	6.00 Metres	Galvanised Steel	
Y	2	STREET LIGHTING	WALESBY CLOSE	GRIMSBY	525770.62	405518.54	2015	30/07/2015	59698	Urbis	Axia 16 LED 350mA	19 Watts	6.00 Metres	Galvanised Steel	
Y	1	STREET LIGHTING	WELL VALE	GRIMSBY	525994.85	405860.46	2015	30/07/2015	60173	1 Urbis LED	Axia 16 LED 500mA	28 Watts	6.00 Metres	Galvanised Steel	
Y	2	STREET LIGHTING	WELL VALE	GRIMSBY	525969.99	405888.17	2015	30/07/2015	60174	1 Urbis LED	Axia 16 LED 500mA	28 Watts	6.00 Metres	Galvanised Steel	
Y	1	STREET LIGHTING	WICKLOW AVENUE	GRIMSBY	526290.56	405830.8	2016	30/06/2016	60677	Urbis	Axia 16 LED 350mA	19 Watts	6.00 Metres	Galvanised Steel	
Y	2	STREET LIGHTING	WICKLOW AVENUE	GRIMSBY	526255.37	405824.28	2016	30/06/2016	60678	Urbis	Axia 16 LED 350mA	19 Watts	6.00 Metres	Galvanised Steel	
Y	3	STREET LIGHTING	WICKLOW AVENUE	GRIMSBY	526249.43	405878.67	1999		60679	Urbis	Axia 16 LED 350mA	19 Watts	6.00 Metres	Galvanised Steel	
Y	4	STREET LIGHTING	WICKLOW AVENUE	GRIMSBY	526209.15	405871.95	1999		60680	Urbis	Axia 16 LED 350mA	19 Watts	6.00 Metres	Galvanised Steel	
Y	5	STREET LIGHTING	WICKLOW AVENUE	GRIMSBY	526247	405841.58	2010		60681	Urbis	Axia 16 LED 350mA	19 Watts	6.00 Metres	Steel	
Y	6	STREET LIGHTING	WICKLOW AVENUE	GRIMSBY	526226.61	405852.97	2010		60682	Urbis	Axia 16 LED 350mA	19 Watts	6.00 Metres	Steel	
Y	7	STREET LIGHTING	WICKLOW AVENUE	GRIMSBY	526226.35	405828.82	2010		60683	Urbis	Axia 16 LED 350mA	19 Watts	6.00 Metres	Steel	
Y	8	STREET LIGHTING	WICKLOW AVENUE	GRIMSBY	526226.52	405800.13	2016	30/06/2016	60684	Urbis	Axia 16 LED 350mA	19 Watts	6.00 Metres	Galvanised Steel	
Y	9	STREET LIGHTING	WICKLOW AVENUE	GRIMSBY	526195	405788.8	2016	30/06/2016	60685	Urbis	Axia 16 LED 350mA	19 Watts	6.00 Metres	Galvanised Steel	
Y	1	STREET LIGHTING	WINDERMERE AVENUE	GRIMSBY	526231.02	405226.15	1959		60861	1 Urbis LED	Teceo 24 LED 500mA	40 Watts	8.00 Metres	Steel	
Y	2	STREET LIGHTING	WINDERMERE AVENUE	GRIMSBY	526214.45	405200.19	1959		60862	1 Urbis LED	Teceo 24 LED 500mA	40 Watts	8.00 Metres	Steel	
Y	3	STREET LIGHTING	WINDERMERE AVENUE	GRIMSBY	526182.78	405191.08	1959		60863	1 Urbis LED	Teceo 24 LED 500mA	40 Watts	8.00 Metres	Steel	
Y	4	STREET LIGHTING	WINDERMERE AVENUE	GRIMSBY	526175.23	405172.02	1959		60864	1 Urbis LED	Teceo 24 LED 500mA	40 Watts	8.00 Metres	Steel	
Y	5	STREET LIGHTING	WINDERMERE AVENUE	GRIMSBY	526155.57	405158.98	2022	29/07/2022	68974	Urbis	Axia 16 LED 350mA	19 Watts	6.00 Metres	Galvanised Steel	
Y	6	STREET LIGHTING	WINDERMERE AVENUE	GRIMSBY	526133.62	405154.07	1959		60866	1 Urbis LED	Teceo 24 LED 500mA	40 Watts	8.00 Metres	Steel	
Y	7	STREET LIGHTING	WINDERMERE AVENUE	GRIMSBY	526126.07	405135.84	1959		60867	1 Urbis LED	Teceo 24 LED 500mA	40 Watts	8.00 Metres	Steel	
Y	8	STREET LIGHTING	WINDERMERE AVENUE	GRIMSBY	526100.29	405117.52	2013	06/08/2013	60868	1 Urbis LED	Teceo 24 LED 500mA	40 Watts	8.00 Metres	Galvanised Steel	
Y	9	STREET LIGHTING	WINDERMERE AVENUE	GRIMSBY	526069.36	405108.59	1959		60869	1 Urbis LED	Teceo 24 LED 500mA	40 Watts	8.00 Metres	Steel	
Y	10	STREET LIGHTING	WINDERMERE AVENUE	GRIMSBY	526062.18	405089.17	2013	06/08/2013	60870	1 Urbis LED	Teceo 24 LED 500mA	40 Watts	8.00 Metres	Galvanised Steel	
Y	11	STREET LIGHTING	WINDERMERE AVENUE	GRIMSBY	526034.93	405082.54	1993		60871	1 Urbis LED	Teceo 24 LED 500mA	40 Watts	8.00 Metres	Galvanised Steel	
Y	12	STREET LIGHTING	WINDERMERE AVENUE	GRIMSBY	526015.97	405055.57	1959		60872	1 Urbis LED	Teceo 24 LED 500mA	40 Watts	8.00 Metres	Steel	
Y	13	STREET LIGHTING	WINDERMERE AVENUE	GRIMSBY	525991.67	405037.8	2013	06/08/2013	60873	1 Urbis LED	Teceo 24 LED 500mA	40 Watts	8.00 Metres	Galvanised Steel	
Y	14	STREET LIGHTING	WINDERMERE AVENUE	GRIMSBY	525960.55	405021.88	1959		60874	1 Urbis LED	Teceo 24 LED 500mA	40 Watts	8.00 Metres	Steel	
Y	15	STREET LIGHTING	WINDERMERE AVENUE	GRIMSBY	525927.04	405025.1	2013	06/08/2013	60875	1 Urbis LED	Teceo 24 LED 500mA	40 Watts	8.00 Metres	Galvanised Steel	
Y	16	STREET LIGHTING	WINDERMERE AVENUE	GRIMSBY	525901.45	405037.9	2013	06/08/2013	60876	1 Urbis LED	Teceo 24 LED 500mA	40 Watts	8.00 Metres	Galvanised Steel	
Y	17	STREET LIGHTING	WINDERMERE AVENUE	GRIMSBY	525883.59	405060.54	1959		60877	1 Urbis LED	Teceo 24 LED 500mA	40 Watts	8.00 Metres	Steel	
Y	18	STREET LIGHTING	WINDERMERE AVENUE	GRIMSBY	525870.52	405088.62	2013	06/08/2013	60878	1 Urbis LED	Teceo 24 LED 500mA	40 Watts	8.00 Metres	Galvanised Steel	
Y	19	STREET LIGHTING	WINDERMERE AVENUE	GRIMSBY	525867.57	405120.11	1959		60879	1 Urbis LED	Teceo 24 LED 500mA	40 Watts	8.00 Metres	Steel	
Y	20	STREET LIGHTING	WINDERMERE AVENUE	GRIMSBY	525846.03	405140.54	1959		60880	1 Urbis LED	Teceo 24 LED 500mA	40 Watts	8.00 Metres	Steel	
Y	1	STREET LIGHTING	WINDLESHAM AVENUE	GRIMSBY	525844.41	405305.48	2016	23/09/2016	68509	Urbis	Axia 16 LED 350mA	19 Watts	6.00 Metres	Galvanised Steel	
Y	2	STREET LIGHTING	WINDLESHAM AVENUE	GRIMSBY	525871.51	405273.49	2016	23/09/2016	68510	Urbis	Axia 16 LED 350mA	19 Watts	6.00 Metres	Galvanised Steel	
Y	1	STREET LIGHTING	WORLABY ROAD	GRIMSBY	525844.21	405729.52	2014	15/10/2014	61219	Urbis	Axia 16 LED 350mA	19 Watts	6.00 Metres	Galvanised Steel	
Y	2	STREET LIGHTING	WORLABY ROAD	GRIMSBY	525821.71	405747.76	2017	30/06/2017	61220	Urbis	Axia 16 LED 350mA	19 Watts	6.00 Metres	Galvanised Steel	
Y	3	STREET LIGHTING	WORLABY ROAD	GRIMSBY	525791.66	405755.84	2017	30/06/2017	61221	Urbis	Axia 16 LED 350mA	19 Watts	6.00 Metres	Galvanised Steel	
Y	4	STREET LIGHTING	WORLABY ROAD	GRIMSBY	525779.49	405786.52	2017	30/06/2017	61222	Urbis	Axia 16 LED 350mA	19 Watts	6.00 Metres	Galvanised Steel	
Y	5	STREET LIGHTING	WORLABY ROAD	GRIMSBY	525782.13	405819.82	2017	30/06/2017	61223	Urbis	Axia 16 LED 350mA	19 Watts	6.00 Metres	Galvanised Steel	
Y	6	STREET LIGHTING	WORLABY ROAD	GRIMSBY	525813.26	405843.33	2017	30/06/2017	61224	Urbis	Axia 16 LED 350mA	19 Watts	6.00 Metres	Galvanised Steel	
Y	7	STREET LIGHTING	WORLABY ROAD	GRIMSBY	525834.95	405881.27	2017	30/06/2017	61225	Urbis	Axia 16 LED 350mA	19 Watts	6.00 Metres	Galvanised Steel	
Y	8	STREET LIGHTING	WORLABY ROAD	GRIMSBY	525869.25	405908.31	2017	30/06/2017	61226	Urbis	Axia 16 LED 350mA	19 Watts	6.00 Metres	Galvanised Steel	
Y	9	STREET LIGHTING	WORLABY ROAD	GRIMSBY	525892.03	405948.06	2017	30/06/2017	61227	Urbis	Axia 16 LED 350mA	19 Watts	6.00 Metres	Galvanised Steel	
Y	10	STREET LIGHTING	WORLABY ROAD	GRIMSBY	525920.35	405985.55	2017	30/06/2017	61228	Urbis	Axia 16 LED 350mA	19 Watts	6.00 Metres	Galvanised Steel	
Y	11	STREET LIGHTING	WORLABY ROAD	GRIMSBY	525921.62	406013.59	2017	30/06/2017	61229	Urbis	Axia 16 LED 350mA	19 Watts	6.00 Metres	Galvanised Steel	
Y	12	STREET LIGHTING	WORLABY ROAD	GRIMSBY	525917.91	406051.44	2017	30/06/2017	61230	Urbis	Axia 16 LED 350mA	19 Watts	6.00 Metres	Galvanised Steel	
Y	13	STREET LIGHTING	WORLABY ROAD	GRIMSBY	525914.27	406088.74	2017	30/06/2017	61231	Urbis	Axia 16 LED 350mA	19 Watts	6.00 Metres	Galvanised Steel	
Y	14	STREET LIGHTING	WORLABY ROAD	GRIMSBY	525910.37	406126.31	2017	30/06/2017	61232	Urbis	Axia 16 LED 350mA	19 Watts	6.00 Metres	Galvanised Steel	
Y	15	STREET LIGHTING	WORLABY ROAD	GRIMSBY	525906.96	406162.64	2021	10/12/2021	68864	Urbis	Axia 16 LED 350mA	19 Watts	6.00 Metres	Galvanised Steel	
Y	16	STREET LIGHTING	WORLABY ROAD	GRIMSBY	525922.41	406192.93	2021	10/12/2021	68865	Urbis	Axia 16 LED 350mA	19 Watts	6.00 Metres	Galvanised Steel	
Y	17	STREET LIGHTING	WORLABY ROAD	GRIMSBY	525944.07	406216.81	2021	10/12/2021	68781	Urbis	Axia 16 LED 350mA	19 Watts	6.00 Metres	Galvanised Steel	
Y	1	STREET LIGHTING	MORDAUNT AVENUE	GRIMSBY	525958.17	405213.65	2016	26/09/2016	68466	Urbis	Axia 16 LED 350mA	19 Watts	6.00 Metres	Galvanised Steel	
Y	2	STREET LIGHTING	MORDAUNT AVENUE	GRIMSBY	525932.31	405197.52	2016	26/09/2016	68467	Urbis	Axia 16 LED 350mA	19 Watts	6.00 Metres	Galvanised Steel	
Y	3	STREET LIGHTING	MORDAUNT AVENUE	GRIMSBY	525896.28	405177.06	2016	26/09/2016	68468	Urbis	Axia 16 LED 350mA	19 Watts	6.00 Metres	Galvanised Steel	
Y	4	STREET LIGHTING	MORDAUNT AVENUE	GRIMSBY	525862.72	405158.36	2016	26/09/2016	68469	Urbis	Axia 16 LED 350mA	19 Watts	6.00 Metres	Galvanised Steel	
Y	1	STREET LIGHTING	LANCING WAY	GRIMSBY	526316.37	405880.86	2016	30/06/2016	52232	1 Urbis LED	Axia 16 LED 500mA	28 Watts	6.00 Metres	Galvanised Steel	
Y	2	STREET LIGHTING	LANCING WAY	GRIMSBY	526337.13	405880.99	2016	30/06/2016	52233	1 Urbis LED	Axia 16 LED 500mA	28 Watts	6.00 Metres	Galvanised Steel	
Y	3	STREET LIGHTING	LANCING WAY	GRIMSBY	526360.67	405891.18	2016	30/06/2016	52234	1 Urbis LED	Axia 16 LED 500mA	28 Watts	6.00 Metres	Galvanised Steel	
Y	4	STREET LIGHTING	LANCING WAY	GRIMSBY	526341.43	405929.08	2016	30/06/2016	52235	1 Urbis LED	Axia 16 LED 500mA	28 Watts	6.00 Metres	Galvanised Steel	
Y	5	STREET LIGHTING	LANCING WAY	GRIMSBY	526354.47	405940.21	2016	30/06/2016	52236	1 Urbis LED	Axia 16 LED 500mA	28 Watts	6.00 Metres	Galvanised Steel	
Y	6	STREET LIGHTING	LANCING WAY	GRIMSBY	526380.29	405913.57	2016	30/06/2016	52237	Urbis	Axia 16 LED 350mA	19 Watts	6.00 Metres	Steel	
Y	7	STREET LIGHTING	LANCING WAY	GRIMSBY	526389.53	405883.89	2016	30/06/2016	52238	1 Urbis LED	Axia 16 LED 500mA	28 Watts	6.00 Metres	Steel	
Y	8	STREET LIGHTING	LANCING WAY	GRIMSBY	526399.15	405848.83	2016	30/06/2016	52239	1 Urbis LED	Axia 16 LED 500mA	28 Watts	6.00 Metres	Steel	
Y	9	STREET LIGHTING	LANCING WAY	GRIMSBY	526369.91	405839.65	2016	30/06/2016	52240	1 Urbis LED	Axia 16 LED 500mA	28 Watts	6.00 Metres	Steel	
Y	10	STREET LIGHTING	LANCING WAY	GRIMSBY	526360.36	405865.97	2016	30/06/2016	68813	1 Urbis LED	Axia 16 LED 500mA	28 Watts	6.00 Metres	Steel	
Y	1	STREET LIGHTING	FOOTPATH BETWEEN LANCING WAY	GRIMSBY	526351.09	405957.63	2002		61582	Urbis	Axia 8 LED 350mA	10 Watts	5.00 Metres	Galvanised Steel	
Y	1	STREET LIGHTING	BOUNDARY ROAD	GRIMSBY	526510.55	405038.33	1991		44419	1 Urbis LED	Teceo 16 LED 500mA	28 Watts	6.00 Metres	Galvanised Steel	
Y	2	STREET LIGHTING	BOUNDARY ROAD	GRIMSBY	526479.37	405026.86	2009		44420	1 Urbis LED	Teceo 16 LED 500mA	28 Watts	6.00 Metres	Steel	
Y	3	STREET LIGHTING	BOUNDARY ROAD	GRIMSBY	526449.64	405017.39	2009		44421	1 Urbis LED	Teceo 16 LED 500mA	28 Watts	6.00 Metres	Steel	
Y	4	STREET LIGHTING	BOUNDARY ROAD	GRIMSBY	526420.21	405020.09	2009		44422	1 Urbis LED	Teceo 16 LED 500mA	28 Watts	6.00 Metres	Steel	
Y	5	STREET LIGHTING	BOUNDARY ROAD	GRIMSBY	526375.57	405005.43	2017	30/06/2017	44423	1 Urbis LED	Teceo 16 LED 500mA	28 Watts	6.00 Metres	Galvanised Steel	
Y	6	STREET LIGHTING	BOUNDARY ROAD	GRIMSBY	526331.34	404990.94	2017	30/06/2017	44424	1 Urbis LED	Teceo 16 LED 500mA	28 Watts	6.00 Metres	Galvanised Steel	
Y	7	STREET LIGHTING	BOUNDARY ROAD	GRIMSBY	526299.27	404968.61	2017	30/06/2017	44425	1 Urbis LED	Teceo 16 LED 500mA	28 Watts	6.00 Metres	Galvanised Steel	
Y	8	STREET LIGHTING	BOUNDARY ROAD	GRIMSBY	526271.04	404967.48	2017	30/06/2017	66710	1 Urbis LED	Teceo 16 LED 500mA	28 Watts	6.00 Metres	Galvanised Steel	
Y	9	STREET LIGHTING	BOUNDARY ROAD	GRIMSBY	526237.51	404952.17	1993		44426	1 Urbis LED	Teceo 16 LED 500mA	28 Watts	6.00 Metres	Galvanised Steel	
Y	1	STREET LIGHTING	BRACKEN PARK	GRIMSBY	526083.39	405894.91	1995		44459	Urbis	Axia 16 LED 350mA	19 Watts	5.00 Metres	Galvanised Steel	
Y	2	STREET LIGHTING	BRACKEN PARK	GRIMSBY	526088.36	405868.94	1995		44460	Urbis	Axia 16 LED 350mA	19 Watts	5.00 Metres	Galvanised Steel	
Y	3	STREET LIGHTING	BRACKEN PARK	GRIMSBY	526075.47	405848.23	1995		44461	Urbis	Axia 16 LED 350mA	19 Watts	5.00 Metres	Galvanised Steel	
Y	4	STREET LIGHTING	BRACKEN PARK	GRIMSBY	526092.96	405825.86	1995		44462	Urbis	Axia 16 LED 350mA	19 Watts	5.00 Metres	Galvanised Steel	
Y	5	STREET LIGHTING	BRACKEN PARK	GRIMSBY	526094.99	405797.05	1995		44463	Urbis	Axia 16 LED 350mA	19 Watts	5.00 Metres	Galvanised Steel	
Y	6	STREET LIGHTING	BRACKEN PARK	GRIMSBY	526105.85	405772.65	1995		44464	Urbis	Axia 16 LED 350mA	19 Watts	5.00 Metres	Galvanised Steel	
Y	7	STREET LIGHTING	BRACKEN PARK	GRIMSBY	526120.39	405750.74	1995		44465	Urbis	Axia 16 LED 350mA	19 Watts	5.00 Metres	Galvanised Steel	
Y	8	STREET LIGHTING	BRACKEN PARK	GRIMSBY	526110.82	405724.51	1995		44466	Urbis	Axia 16 LED 350mA	19 Watts	5.00 Metres	Galvanised Steel	
Y	9	STREET LIGHTING	BRACKEN PARK	GRIMSBY	526126.65	405704.53	1995		44467	Urbis	Axia 16 LED 350mA	19 Watts	5.00 Metres	Galvanised Steel	
Y	1	STREET LIGHTING	MAYFIELD CLOSE	GRIMSBY	525530.37	405670.65	1988		53459	Urbis	Axia 16 LED 350mA	19 Watts	6.00 Metres	Galvanised Steel	
Y	2	STREET LIGHTING	MAYFIELD CLOSE	GRIMSBY	525531.77	405641.47	1988		53460	Urbis	Axia 16 LED 350mA	19 Watts	6.00 Metres	Galvanised Steel	
Y	1	STREET LIGHTING	CORNFIELD CLOSE	GRIMSBY	525573.03	405582.6	1988		46709	Urbis	Axia 16 LED 350mA	19 Watts	5.00 Metres	Galvanised Steel	
Y	2	STREET LIGHTING	CORNFIELD CLOSE	GRIMSBY	525553.66	405573.93	1988		46710	Urbis	Axia 16 LED 350mA	19 Watts	5.00 Metres	Galvanised Steel	
Y	1	STREET LIGHTING	SAGEFIELD CLOSE	GRIMSBY	525591.68	405643.67	1988		56468	Urbis	Axia 16 LED 350mA	19 Watts	6.00 Metres	Galvanised Steel	
Y	2	STREET LIGHTING	SAGEFIELD CLOSE	GRIMSBY	525577.87	405618.45	1988		56469	Urbis	Axia 16 LED 350mA	19 Watts	6.00 Metres	Galvanised Steel	
Y	3	STREET LIGHTING	SAGEFIELD CLOSE	GRIMSBY	525595.55	405592.86	1988		56470	Urbis	Axia 16 LED 350mA	19 Watts	6.00 Metres	Galvanised Steel	
Y	4	STREET LIGHTING	SAGEFIELD CLOSE	GRIMSBY	525602.55	405562.29	1988		56471	Urbis	Axia 16 LED 350mA	19 Watts	6.00 Metres	Galvanised Steel	
Y	5	STREET LIGHTING	SAGEFIELD CLOSE	GRIMSBY	525612.3	405536.06	1988		56472	Urbis	Axia 16 LED 350mA	19 Watts	6.00 Metres	Galvanised Steel	
Y	6	STREET LIGHTING	SAGEFIELD CLOSE	GRIMSBY	525592.79	405528.78	1988		56473	Urbis	Axia 16 LED 350mA	19 Watts	6.00 Metres	Galvanised Steel	
Y	7	STREET LIGHTING	SAGEFIELD CLOSE	GRIMSBY	525575.3	405509.91	1988		56474	Urbis	Axia 16 LED 350mA	19 Watts	6.00 Metres	Galvanised Steel	

Y	1	STREET LIGHTING	MOODY LANE	GRIMSBY	526156.09	410455.35	2019	25/04/2019	67421	Urbis	Teceo 48 LED 500mA	79 Watts	10.00 Metres	Galvanised Steel	
Y	2	STREET LIGHTING	MOODY LANE	GRIMSBY	526161.54	410481.46	2019	25/04/2019	67423	Urbis	Teceo 48 LED 500mA	79 Watts	10.00 Metres	Galvanised Steel	
Y	3	STREET LIGHTING	MOODY LANE	GRIMSBY	526170.05	410518.64	2019	25/04/2019	67422	Urbis	Teceo 48 LED 500mA	79 Watts	10.00 Metres	Galvanised Steel	
Y	4	STREET LIGHTING	MOODY LANE	GRIMSBY	526163.03	410551.92	2019	25/04/2019	67424	Urbis	Teceo 48 LED 500mA	79 Watts	10.00 Metres	Galvanised Steel	
Y	5	STREET LIGHTING	MOODY LANE	GRIMSBY	526166.03	410560.42	2019	25/04/2019	67425	Urbis	Teceo 48 LED 500mA	79 Watts	10.00 Metres	Galvanised Steel	
Y	6	STREET LIGHTING	MOODY LANE	GRIMSBY	526182.74	410610.21	2019	25/04/2019	67426	Urbis	Teceo 48 LED 500mA	79 Watts	10.00 Metres	Galvanised Steel	
Y	7	STREET LIGHTING	MOODY LANE	GRIMSBY	526197.77	410635.68	2019	25/04/2019	67427	Urbis	Teceo 48 LED 500mA	79 Watts	10.00 Metres	Galvanised Steel	
Y	8	STREET LIGHTING	MOODY LANE	GRIMSBY	526209.75	410660.14	2019	25/04/2019	67428	Urbis	Teceo 48 LED 500mA	79 Watts	10.00 Metres	Galvanised Steel	
Y	9	STREET LIGHTING	MOODY LANE	GRIMSBY	526222.41	410676.54	2019	25/04/2019	67429	Urbis	Teceo 48 LED 500mA	79 Watts	10.00 Metres	Galvanised Steel	
Y	10	STREET LIGHTING	MOODY LANE	GRIMSBY	526236	410698.49	2019	25/04/2019	67430	Urbis	Teceo 48 LED 500mA	79 Watts	10.00 Metres	Galvanised Steel	
Y	11	STREET LIGHTING	MOODY LANE	GRIMSBY	526258.6	410706.85	2019	25/04/2019	67431	Urbis	Teceo 48 LED 500mA	79 Watts	10.00 Metres	Galvanised Steel	
Y	12	STREET LIGHTING	MOODY LANE	GRIMSBY	526262.72	410736.38	2019	25/04/2019	67432	Urbis	Teceo 48 LED 500mA	79 Watts	10.00 Metres	Galvanised Steel	
Y	13	STREET LIGHTING	MOODY LANE	GRIMSBY	526268.75	410757.28	2019	25/04/2019	67433	Urbis	Teceo 48 LED 500mA	79 Watts	10.00 Metres	Galvanised Steel	
Y	14	STREET LIGHTING	MOODY LANE	GRIMSBY	526270.36	410779.96	2019	25/04/2019	67434	Urbis	Teceo 48 LED 500mA	79 Watts	10.00 Metres	Galvanised Steel	
Y	15	STREET LIGHTING	MOODY LANE	GRIMSBY	526268.26	410830.35	2019	25/04/2019	67435	Urbis	Teceo 48 LED 500mA	79 Watts	10.00 Metres	Galvanised Steel	
Y	16	STREET LIGHTING	MOODY LANE	GRIMSBY	526255.11	410867.04	2019	25/04/2019	67436	Urbis	Teceo 48 LED 500mA	79 Watts	10.00 Metres	Galvanised Steel	
Y	17	STREET LIGHTING	MOODY LANE	GRIMSBY	526239.49	410895.88	2019	25/04/2019	67437	Urbis	Teceo 48 LED 500mA	79 Watts	10.00 Metres	Galvanised Steel	
Y	18	STREET LIGHTING	MOODY LANE	GRIMSBY	526223.6	410914.43	2019	25/04/2019	67438	Urbis	Teceo 48 LED 500mA	79 Watts	10.00 Metres	Galvanised Steel	
Y	19	STREET LIGHTING	MOODY LANE	GRIMSBY	526206.98	410932.62	2019	25/04/2019	67439	Urbis	Teceo 48 LED 500mA	79 Watts	10.00 Metres	Galvanised Steel	
Y	20	STREET LIGHTING	MOODY LANE	GRIMSBY	526181.72	410951.82	2019	25/04/2019	67440	Urbis	Teceo 48 LED 500mA	79 Watts	10.00 Metres	Galvanised Steel	
Y	21	STREET LIGHTING	MOODY LANE	GRIMSBY	526153.15	410970.1	2019	25/04/2019	67441	Urbis	Teceo 48 LED 500mA	79 Watts	10.00 Metres	Galvanised Steel	
Y	22	STREET LIGHTING	MOODY LANE	GRIMSBY	526127.98	410983.32	2019	25/04/2019	67442	Urbis	Teceo 48 LED 500mA	79 Watts	10.00 Metres	Galvanised Steel	
Y	23	STREET LIGHTING	MOODY LANE	GRIMSBY	526096.2	410991.77	2019	25/04/2019	67443	Urbis	Teceo 48 LED 500mA	79 Watts	10.00 Metres	Galvanised Steel	
Y	24	STREET LIGHTING	MOODY LANE	GRIMSBY	526066.81	411002.61	2019	25/04/2019	67444	Urbis	Teceo 48 LED 500mA	79 Watts	10.00 Metres	Galvanised Steel	
Y	25	STREET LIGHTING	MOODY LANE	GRIMSBY	526045.59	411011.06	2019	25/04/2019	67445	Urbis	Teceo 48 LED 500mA	79 Watts	10.00 Metres	Galvanised Steel	
Y	26	STREET LIGHTING	MOODY LANE	GRIMSBY	526011.52	411019.51	2019	25/04/2019	67446	Urbis	Teceo 48 LED 500mA	79 Watts	10.00 Metres	Galvanised Steel	
Y	27	STREET LIGHTING	MOODY LANE	GRIMSBY	525976.24	411028.33	2019	25/04/2019	67447	Urbis	Teceo 48 LED 500mA	79 Watts	10.00 Metres	Galvanised Steel	
Y	28	STREET LIGHTING	MOODY LANE	GRIMSBY	525955.85	411034.21	2019	25/04/2019	67448	Urbis	Teceo 48 LED 500mA	79 Watts	10.00 Metres	Galvanised Steel	
Y	29	STREET LIGHTING	MOODY LANE	GRIMSBY	525925.54	411042.2	2019	25/04/2019	67449	Urbis	Teceo 48 LED 500mA	79 Watts	10.00 Metres	Galvanised Steel	
Y	30	STREET LIGHTING	MOODY LANE	GRIMSBY	525835.98	411051.66	2019	25/04/2019	67450	Urbis	Teceo 48 LED 500mA	79 Watts	10.00 Metres	Galvanised Steel	
Y	31	STREET LIGHTING	MOODY LANE	GRIMSBY	525795.14	411061.66	2019	25/04/2019	67451	Urbis	Teceo 48 LED 500mA	79 Watts	10.00 Metres	Galvanised Steel	
Y	32	STREET LIGHTING	MOODY LANE	GRIMSBY	525755.43	411069.85	2019	25/04/2019	67452	Urbis	Teceo 48 LED 500mA	79 Watts	10.00 Metres	Galvanised Steel	
Y	33	STREET LIGHTING	MOODY LANE	GRIMSBY	525725.27	411078.6	2020	10/06/2020	67453	Urbis	Teceo 48 LED 700mA	104 Watts	12.00 Metres	Galvanised Steel	
Y	34	STREET LIGHTING	MOODY LANE	GRIMSBY	525682.07	411089.24	2019	25/04/2019	67454	Urbis	Teceo 48 LED 500mA	79 Watts	10.00 Metres	Galvanised Steel	
Y	35	STREET LIGHTING	MOODY LANE	GRIMSBY	525645.92	411098.18	2019	25/04/2019	67455	Urbis	Teceo 48 LED 500mA	79 Watts	10.00 Metres	Galvanised Steel	
Y	36	STREET LIGHTING	MOODY LANE	GRIMSBY	525608.19	411108.34	2019	25/04/2019	67456	Urbis	Teceo 48 LED 500mA	79 Watts	10.00 Metres	Galvanised Steel	
Y	37	STREET LIGHTING	MOODY LANE	GRIMSBY	525575.06	411116.97	2019	25/04/2019	67457	Urbis	Teceo 48 LED 500mA	79 Watts	10.00 Metres	Galvanised Steel	
Y	38	STREET LIGHTING	MOODY LANE	GRIMSBY	525525.16	411129.12	2019	25/04/2019	67458	Urbis	Teceo 48 LED 500mA	79 Watts	10.00 Metres	Galvanised Steel	
Y	39	STREET LIGHTING	MOODY LANE	GRIMSBY	525488.5	411138.92	2019	25/04/2019	67459	Urbis	Teceo 48 LED 500mA	79 Watts	10.00 Metres	Galvanised Steel	
Y	40	STREET LIGHTING	MOODY LANE	GRIMSBY	525452.25	411147.12	2019	25/04/2019	67460	Urbis	Teceo 48 LED 500mA	79 Watts	10.00 Metres	Galvanised Steel	
Y	41	STREET LIGHTING	MOODY LANE	GRIMSBY	525422.97	411165.79	2019	25/04/2019	67461	Urbis	Teceo 48 LED 500mA	79 Watts	10.00 Metres	Galvanised Steel	
Y	42	STREET LIGHTING	MOODY LANE	GRIMSBY	525390.29	411175.41	2019	25/04/2019	67462	Urbis	Teceo 48 LED 500mA	79 Watts	10.00 Metres	Galvanised Steel	
Y	43	STREET LIGHTING	MOODY LANE	GRIMSBY	525352.53	411184.31	2019	25/04/2019	67463	Urbis	Teceo 48 LED 500mA	79 Watts	10.00 Metres	Galvanised Steel	
Y	44	STREET LIGHTING	MOODY LANE	GRIMSBY	525318.66	411192.76	2019	25/04/2019	67464	Urbis	Teceo 48 LED 500mA	79 Watts	10.00 Metres	Galvanised Steel	
Y	45	STREET LIGHTING	MOODY LANE	GRIMSBY	525270.26	411193.71	2019	25/04/2019	67465	Urbis	Teceo 48 LED 500mA	79 Watts	10.00 Metres	Galvanised Steel	
Y	46	STREET LIGHTING	MOODY LANE	GRIMSBY	525233.02	411202.72	2019	25/04/2019	67466	Urbis	Teceo 48 LED 500mA	79 Watts	10.00 Metres	Galvanised Steel	
Y	47	STREET LIGHTING	MOODY LANE	GRIMSBY	525216.62	411218.42	2019	25/04/2019	67467	Urbis	Teceo 48 LED 500mA	79 Watts	10.00 Metres	Galvanised Steel	
Y	48	STREET LIGHTING	MOODY LANE	GRIMSBY	525189.43	411221.77	2019	25/04/2019	67468	Urbis	Teceo 48 LED 500mA	79 Watts	10.00 Metres	Galvanised Steel	
Y	49	STREET LIGHTING	MOODY LANE	GRIMSBY	525152.51	411226.64	2019	25/04/2019	67469	Urbis	Teceo 48 LED 500mA	79 Watts	10.00 Metres	Galvanised Steel	
Y	50	STREET LIGHTING	MOODY LANE	GRIMSBY	525110.16	411231.42	2019	25/04/2019	67470	Urbis	Teceo 48 LED 500mA	79 Watts	10.00 Metres	Galvanised Steel	
Y	51	STREET LIGHTING	MOODY LANE	GRIMSBY	525087.11	411236.47	2019	25/04/2019	67471	Urbis	Teceo 48 LED 500mA	79 Watts	10.00 Metres	Galvanised Steel	
Y	52	STREET LIGHTING	MOODY LANE	GRIMSBY	525060.19	411243.36	2019	25/04/2019	67472	Urbis	Teceo 48 LED 500mA	79 Watts	10.00 Metres	Galvanised Steel	
Y	53	STREET LIGHTING	MOODY LANE	GRIMSBY	525030.89	411249.88	2019	25/04/2019	67473	Urbis	Teceo 48 LED 500mA	79 Watts	10.00 Metres	Galvanised Steel	
Y	54	STREET LIGHTING	MOODY LANE	GRIMSBY	524982.85	411261.64	2019	25/04/2019	67474	Urbis	Teceo 48 LED 500mA	79 Watts	10.00 Metres	Galvanised Steel	
Y	55	STREET LIGHTING	MOODY LANE	GRIMSBY	524952.36	411256.49	2019	25/04/2019	67475	Urbis	Teceo 48 LED 500mA	79 Watts	10.00 Metres	Galvanised Steel	
Y	56	STREET LIGHTING	MOODY LANE	GRIMSBY	524918.56	411277.16	2019	25/04/2019	67476	Urbis	Teceo 48 LED 500mA	79 Watts	10.00 Metres	Galvanised Steel	
Y	57	STREET LIGHTING	MOODY LANE	GRIMSBY	524887.74	411288.29	2019	25/04/2019	67477	Urbis	Teceo 48 LED 500mA	79 Watts	10.00 Metres	Galvanised Steel	
Y	58	STREET LIGHTING	MOODY LANE	GRIMSBY	524855.09	411294.02	2019	25/04/2019	67478	Urbis	Teceo 48 LED 500mA	79 Watts	10.00 Metres	Galvanised Steel	
Y	59	STREET LIGHTING	MOODY LANE	GRIMSBY	524823.3	411301.66	2019	25/04/2019	67479	Urbis	Teceo 48 LED 500mA	79 Watts	10.00 Metres	Galvanised Steel	
Y	60	STREET LIGHTING	MOODY LANE	GRIMSBY	524792.92	411308.39	2019	25/04/2019	67480	Urbis	Teceo 48 LED 500mA	79 Watts	10.00 Metres	Galvanised Steel	
Y	61	STREET LIGHTING	MOODY LANE	GRIMSBY	524759.57	411317.65	2019	25/04/2019	67481	Urbis	Teceo 48 LED 500mA	79 Watts	10.00 Metres	Galvanised Steel	
Y	62	STREET LIGHTING	MOODY LANE	GRIMSBY	524715.75	411315.83	2019	25/04/2019	67482	Urbis	Teceo 48 LED 500mA	79 Watts	10.00 Metres	Galvanised Steel	
Y	63	STREET LIGHTING	MOODY LANE	GRIMSBY	524687.92	411322.17	2019	25/04/2019	67483	Urbis	Teceo 48 LED 500mA	79 Watts	10.00 Metres	Galvanised Steel	
Y	64	STREET LIGHTING	MOODY LANE	GRIMSBY	524657.04	411343.35	1989		53852	1 Urbis LED	Teceo 48 LED 500mA	79 Watts	10.00 Metres	Galvanised Steel	
Y	1	STREET LIGHTING	ENERGY PARK WAY	GRIMSBY	522917.44	412831.67	2021	01/02/2021	68403	Urbis	mpera Maxi 128 LED 700m	277 Watts	10.00 Metres	Galvanised Steel	
Y	2	STREET LIGHTING	ENERGY PARK WAY	GRIMSBY	522926.87	412800.42	2021	01/02/2021	68314	Urbis	Ampera Midi 64 LED 500mA	98 Watts	10.00 Metres	Galvanised Steel	
Y	3	STREET LIGHTING	ENERGY PARK WAY	GRIMSBY	522933.64	412783.49	2021	01/02/2021	68335	Urbis	Ampera Midi 64 LED 500mA	98 Watts	10.00 Metres	Galvanised Steel	
Y	4	STREET LIGHTING	ENERGY PARK WAY	GRIMSBY	522945.35	412762.38	2021	01/02/2021	68336	Urbis	Ampera Midi 64 LED 500mA	98 Watts	10.00 Metres	Galvanised Steel	
Y	5	STREET LIGHTING	ENERGY PARK WAY	GRIMSBY	522958.68	412735.7	2021	01/02/2021	68337	Urbis	Ampera Midi 64 LED 500mA	98 Watts	10.00 Metres	Galvanised Steel	
Y	6	STREET LIGHTING	ENERGY PARK WAY	GRIMSBY	522973.99	412710.34	2021	01/02/2021	68338	Urbis	Ampera Midi 64 LED 500mA	98 Watts	10.00 Metres	Galvanised Steel	
Y	7	STREET LIGHTING	ENERGY PARK WAY	GRIMSBY	522993.58	412683.04	2021	01/02/2021	68339	Urbis	Ampera Midi 64 LED 500mA	98 Watts	10.00 Metres	Galvanised Steel	
Y	8	STREET LIGHTING	ENERGY PARK WAY	GRIMSBY	523022.31	412651.6	2021	01/02/2021	68340	Urbis	Ampera Midi 64 LED 500mA	98 Watts	10.00 Metres	Galvanised Steel	
Y	9	STREET LIGHTING	ENERGY PARK WAY	GRIMSBY	523050.92	412628.78	2021	01/02/2021	68341	Urbis	Ampera Midi 64 LED 500mA	98 Watts	10.00 Metres	Galvanised Steel	
Y	10	STREET LIGHTING	ENERGY PARK WAY	GRIMSBY	523103.66	412599.87	2021	01/02/2021	68342	Urbis	Ampera Midi 64 LED 500mA	98 Watts	10.00 Metres	Galvanised Steel	
Y	11	STREET LIGHTING	ENERGY PARK WAY	GRIMSBY	523145.34	412558.75	2021	01/02/2021	68343	Urbis	Ampera Midi 64 LED 500mA	98 Watts	10.00 Metres	Galvanised Steel	
Y	12	STREET LIGHTING	ENERGY PARK WAY	GRIMSBY	523182.94	412522.8	2021	01/02/2021	68344	Urbis	Ampera Midi 64 LED 500mA	98 Watts	10.00 Metres	Galvanised Steel	
Y	13	STREET LIGHTING	ENERGY PARK WAY	GRIMSBY	523223.08	412482.51	2021	01/02/2021	68345	Urbis	Ampera Midi 64 LED 500mA	98 Watts	10.00 Metres	Galvanised Steel	
Y	14	STREET LIGHTING	ENERGY PARK WAY	GRIMSBY	523284.83	412433.41	2021	01/02/2021	68346	Urbis	Ampera Midi 64 LED 500mA	98 Watts	10.00 Metres	Galvanised Steel	
Y	15	STREET LIGHTING	ENERGY PARK WAY	GRIMSBY	523322.92	412391.33	2021	01/02/2021	68347	Urbis	Ampera Midi 64 LED 500mA	98 Watts	10.00 Metres	Galvanised Steel	
Y	16	STREET LIGHTING	ENERGY PARK WAY	GRIMSBY	523353.54	412361.42	2021	01/02/2021	68348	Urbis	Ampera Midi 64 LED 500mA	98 Watts	10.00 Metres	Galvanised Steel	
Y	17	STREET LIGHTING	ENERGY PARK WAY	GRIMSBY	523377.09	412338.32	2021	01/02/2021	68349	Urbis	Ampera Midi 64 LED 500mA	98 Watts	10.00 Metres	Galvanised Steel	
Y	18	STREET LIGHTING	ENERGY PARK WAY	GRIMSBY	523404.24	412310.73	2021	01/02/2021	68350	Urbis	Ampera Midi 64 LED 500mA	98 Watts	10.00 Metres	Galvanised Steel	
Y	19	STREET LIGHTING	ENERGY PARK WAY	GRIMSBY	523432.35	412285.35	2021	01/02/2021	68351	Urbis	Ampera Midi 64 LED 500mA	98 Watts	10.00 Metres	Galvanised Steel	
Y	20	STREET LIGHTING	ENERGY PARK WAY	GRIMSBY	523452.46	412265.65	2021	01/02/2021	68352	Urbis	Ampera Midi 64 LED 500mA	98 Watts	10.00 Metres	Galvanised Steel	
Y	21	STREET LIGHTING	ENERGY PARK WAY	GRIMSBY	523471.65	412247.25	2021	01/02/2021	68353	Urbis	Ampera Midi 64 LED 500mA	98 Watts	10.00 Metres	Galvanised Steel	
Y	22	STREET LIGHTING	ENERGY PARK WAY	GRIMSBY	523492.34	412226.4	2021	01/02/2021	68354	Urbis	Ampera Midi 64 LED 500mA	98 Watts	10.00 Metres	Galvanised Steel	
Y	23	STREET LIGHTING	ENERGY PARK WAY	GRIMSBY	523514.19	412200.08	2021	01/02/2021	68355	Urbis	Ampera Midi 64 LED 500mA	98 Watts	10.00 Metres	Galvanised Steel	
Y	24	STREET LIGHTING	ENERGY PARK WAY	GRIMSBY	523536.91	412174.76	2021	01/02/2021	68356	Urbis	Ampera Midi 64 LED 500mA	98 Watts	10.00 Metres	Galvanised Steel	
Y	25	STREET LIGHTING	ENERGY PARK WAY	GRIMSBY	523559.46	412142.17	2021	01/02/2021	68357	Urbis	Ampera Midi 64 LED 500mA	98 Watts	10.00 Metres	Galvanised Steel	
Y	26	STREET LIGHTING	ENERGY PARK WAY	GRIMSBY	523590.21	412112.91	2021	01/02/2021	68358	Urbis	Ampera Midi 64 LED 500mA	98 Watts	10.00 Metres	Galvanised Steel	
Y	27	STREET LIGHTING	ENERGY PARK WAY	GRIMSBY	523611.69	412095.6	2021	01/02/2021	68359	Urbis	Ampera Midi 64 LED 500mA	98 Watts	10.00 Metres	Galvanised Steel	
Y	28	STREET LIGHTING	ENERGY PARK WAY	GRIMSBY	523642.45	412067.06	2021	01/02/2021	68360	Urbis	Ampera Midi 64 LED 500mA	98 Watts	10.00 Metres	Galvanised Steel	
Y	29	STREET LIGHTING	ENERGY PARK WAY	GRIMSBY	523676.19	412043.17	2021	01/02/2021	68361	Urbis	Ampera Midi 64 LED 500mA	98 Watts	10.00 Metres	Galvanised Steel	
Y	30	STREET LIGHTING	ENERGY PARK WAY	GRIMSBY	523702.49	412027.59	2021	01/02/2021	68362	Urbis	Ampera Midi 64 LED 500mA	98 Watts	10.00 Metres	Galvanised Steel	
Y	31	STREET LIGHTING	ENERGY PARK WAY	GRIMSBY	523727.85	412015.2	2021	01/02/2021	68363	Urbis	Ampera Midi 64 LED 500mA	98 Watts	10.00 Metres	Galvanised Steel	
Y	32	STREET LIGHTING	ENERGY PARK WAY	GRIMSBY	523751.13	412002.07	2021	01/02/2021	68364	Urbis	Ampera Midi 64 LED 500mA	98 Watts	10.00 Metres	Galvanised Steel	
Y	33	STREET LIGHTING	ENERGY PARK WAY	GRIMSBY	523774.08	411982.51	2021	01/02/2021	68365	Urbis	Ampera Midi 64 LED 500mA	98 Watts	10.00 Metres	Galvanised Steel	
Y	34	STREET LIGHTING	ENERGY PARK WAY	GRIMSBY	523795.95	411964.74	2021	01/02/2021	68366	Urbis	Ampera Midi 64 LED 500mA	98 Watts	10.00 Metres	Galvanised Steel	
Y	35	STREET LIGHTING	ENERGY PARK WAY	GRIMSBY	523818.94	411944.13	2021	01/02/2021	68367	Urbis	Ampera Midi 64 LED 500mA	98 Watts	10.00 Metres	Galvanised Steel	
Y	36	STREET LIGHTING	ENERGY PARK WAY	GRIMSBY	523845.58	411920	2021	01/02/2021	68368	Urbis	Ampera Midi 64 LED 500mA	98 Watts	10.00 Metres	Galvanised Steel	
Y	37	STREET LIGHTING	ENERGY PARK WAY	GRIMSBY	523868.04	411899.34	2021	01/02/2021	68369	Urbis	Ampera Midi 64 LED 500mA	98 Watts	10.00 Metres	Galvanised Steel	
Y	38	STREET LIGHTING	ENERGY PARK WAY	GRIMSBY	523898.31	411889.53	2021	01/02/2021	68370	Urbis	Ampera Midi 64 LED 500mA	98 Watts	10.00 Metres	Galvanised Steel	
Y	39	STREET LIGHTING	ENERGY PARK WAY	GRIMSBY	523912.74	411861.56	2021	01/02/2021	68371	Urbis	Ampera Midi 64 LED 500mA	98 Watts	10.00 Metres	Galvanised Steel	
Y	40	STREET LIGHTING	ENERGY PARK WAY	GRIMSBY	523932.84	411844.46	2021	01/02/2021	68372	Urbis	Ampera Midi 64 LED 500mA	98 Watts	10.00 Metres	Galvanised Steel	
Y	41	STREET LIGHTING	ENERGY PARK WAY	GRIMSBY	523944.63	411829.83	2021	01/02/2021	68373	Urbis	Ampera Midi 64 LED 500mA	98 Watts	10.00 Metres	Galvanised Steel	
Y	42	STREET LIGHTING	ENERGY PARK WAY	GRIMSBY	523955.49	411818.81	2021	01/02/2021	68374	Urbis	Ampera Midi 64 LED 500mA	98 Watts	10.00 Metres	Galvanised Steel	
Y	43	STREET LIGHTING	ENERGY PARK WAY	GRIMSBY	523967.61	411808.37	2021	01/02/2021	68375	Urbis	Ampera Midi 64 LED 500mA	98 Watts	10.00 Metres	Galvanised Steel	
Y	44	STREET LIGHTING	ENERGY PARK WAY	GRIMSBY	523980.36	411799.98	2021	01/02/2021	68376	Urbis	Ampera Midi 64 LED 500mA	98 Watts	10.00 Metres	Galvanised Steel	
Y	45	STREET LIGHTING	ENERGY PARK WAY	GRIMSBY	523984.9	411790.38	2021	01/02/2021	68377	Urbis	Ampera Midi 64 LED 500mA	98 Watts	10.00 Metres	Galvanised Steel	
Y	46	STREET LIGHTING	ENERGY PARK WAY	GRIMSBY	523995.05	411779.88	2021	01/02/2021	68378	Urbis	Ampera Midi 64 LED 500mA	98 Watts	10.00 Metres	Galvanised Steel	

Y	47	STREET LIGHTING	ENERGY PARK WAY	GRIMSBY	524003.69	411770.16	2021	01/02/2021	68379	Urbis	Ampera Midi 64 LED 500mA	98 Watts	10.00 Metres	Galvanised Steel	
Y	48	STREET LIGHTING	ENERGY PARK WAY	GRIMSBY	524022.25	411755.62	2021	01/02/2021	68380	Urbis	Ampera Midi 64 LED 500mA	98 Watts	10.00 Metres	Galvanised Steel	
Y	49	STREET LIGHTING	ENERGY PARK WAY	GRIMSBY	524049.1	411730.31	2021	01/02/2021	68381	Urbis	Ampera Midi 64 LED 500mA	98 Watts	10.00 Metres	Galvanised Steel	
Y	50	STREET LIGHTING	ENERGY PARK WAY	GRIMSBY	524068.85	411712.97	2021	01/02/2021	68382	Urbis	Ampera Midi 64 LED 500mA	98 Watts	10.00 Metres	Galvanised Steel	
Y	51	STREET LIGHTING	ENERGY PARK WAY	GRIMSBY	524088.39	411695.34	2021	01/02/2021	68383	Urbis	Ampera Midi 64 LED 500mA	98 Watts	10.00 Metres	Galvanised Steel	
Y	52	STREET LIGHTING	ENERGY PARK WAY	GRIMSBY	524113.99	411670.76	2021	01/02/2021	68384	Urbis	Ampera Midi 64 LED 500mA	98 Watts	10.00 Metres	Galvanised Steel	
Y	53	STREET LIGHTING	ENERGY PARK WAY	GRIMSBY	524150.26	411635.73	2021	01/02/2021	68385	Urbis	Ampera Midi 64 LED 500mA	98 Watts	10.00 Metres	Galvanised Steel	
Y	54	STREET LIGHTING	ENERGY PARK WAY	GRIMSBY	524175.29	411612.42	2021	01/02/2021	68386	Urbis	Ampera Midi 64 LED 500mA	98 Watts	10.00 Metres	Galvanised Steel	
Y	55	STREET LIGHTING	ENERGY PARK WAY	GRIMSBY	524204.86	411584.96	2021	01/02/2021	68387	Urbis	Ampera Midi 64 LED 500mA	98 Watts	10.00 Metres	Galvanised Steel	
Y	56	STREET LIGHTING	ENERGY PARK WAY	GRIMSBY	524234.21	411558.26	2021	01/02/2021	68388	Urbis	Ampera Midi 64 LED 500mA	98 Watts	10.00 Metres	Galvanised Steel	
Y	57	STREET LIGHTING	ENERGY PARK WAY	GRIMSBY	524259.04	411531.6	2021	01/02/2021	68389	Urbis	Ampera Midi 64 LED 500mA	98 Watts	10.00 Metres	Galvanised Steel	
Y	58	STREET LIGHTING	ENERGY PARK WAY	GRIMSBY	524286.27	411501.54	2021	01/02/2021	68390	Urbis	Ampera Midi 64 LED 500mA	98 Watts	10.00 Metres	Galvanised Steel	
Y	59	STREET LIGHTING	ENERGY PARK WAY	GRIMSBY	524309.63	411470.7	2021	01/02/2021	68391	Urbis	Ampera Midi 64 LED 500mA	98 Watts	10.00 Metres	Galvanised Steel	
Y	60	STREET LIGHTING	ENERGY PARK WAY	GRIMSBY	524326.56	411439.37	2021	01/02/2021	68392	Urbis	Ampera Midi 64 LED 500mA	98 Watts	10.00 Metres	Galvanised Steel	
Y	61	STREET LIGHTING	ENERGY PARK WAY	GRIMSBY	524346.23	411402.76	2021	01/02/2021	68393	Urbis	Ampera Midi 64 LED 500mA	98 Watts	10.00 Metres	Galvanised Steel	
Y	62	STREET LIGHTING	ENERGY PARK WAY	GRIMSBY	524368.85	411383.24	2021	01/02/2021	68394	Urbis	Ampera Midi 64 LED 500mA	98 Watts	10.00 Metres	Galvanised Steel	
Y	63	STREET LIGHTING	ENERGY PARK WAY	GRIMSBY	524398.91	411359.77	2021	01/02/2021	68395	Urbis	Ampera Midi 64 LED 500mA	98 Watts	10.00 Metres	Galvanised Steel	
Y	64	STREET LIGHTING	ENERGY PARK WAY	GRIMSBY	524426.17	411347.42	2021	01/02/2021	68396	Urbis	Ampera Midi 64 LED 500mA	98 Watts	10.00 Metres	Galvanised Steel	
Y	65	STREET LIGHTING	ENERGY PARK WAY	GRIMSBY	524454.58	411340.57	2021	01/02/2021	68397	Urbis	Ampera Midi 64 LED 500mA	98 Watts	10.00 Metres	Galvanised Steel	
Y	66	STREET LIGHTING	ENERGY PARK WAY	GRIMSBY	524482.51	411337.13	2021	01/02/2021	68398	Urbis	Ampera Midi 64 LED 500mA	98 Watts	10.00 Metres	Galvanised Steel	
Y	67	STREET LIGHTING	ENERGY PARK WAY	GRIMSBY	524507.03	411338.15	2021	01/02/2021	68399	Urbis	Ampera Midi 64 LED 500mA	98 Watts	10.00 Metres	Galvanised Steel	
Y	68	STREET LIGHTING	ENERGY PARK WAY	GRIMSBY	524535.34	411344.75	2021	01/02/2021	68400	Urbis	Ampera Midi 64 LED 500mA	98 Watts	10.00 Metres	Galvanised Steel	
Y	69	STREET LIGHTING	ENERGY PARK WAY	GRIMSBY	524565.18	411350.73	2021	01/02/2021	68401	Urbis	Ampera Midi 64 LED 500mA	98 Watts	10.00 Metres	Galvanised Steel	
Y	70	STREET LIGHTING	ENERGY PARK WAY	GRIMSBY	524605.16	411353.71	2021	01/02/2021	68402	Urbis	Ampera Midi 64 LED 500mA	98 Watts	10.00 Metres	Galvanised Steel	
Y	1	STREET LIGHTING	FOOTPATH BETWEEN GILBEY ROAD	GRIMSBY	525478.54	410607.65	2020	05/10/2020	68329	Urbis	Teceo 24 LED 500mA	40 Watts	6.00 Metres	Steel	
Y	2	STREET LIGHTING	FOOTPATH BETWEEN GILBEY ROAD	GRIMSBY	525447.16	410625.36	2020	05/10/2020	68330	Urbis	Teceo 24 LED 500mA	40 Watts	6.00 Metres	Steel	
Y	3	STREET LIGHTING	FOOTPATH BETWEEN GILBEY ROAD	GRIMSBY	525405.65	410646.23	2020	05/10/2020	68331	Urbis	Teceo 24 LED 500mA	40 Watts	6.00 Metres	Steel	
Y	4	STREET LIGHTING	FOOTPATH BETWEEN GILBEY ROAD	GRIMSBY	525361.01	410665.93	2020	05/10/2020	68332	Urbis	Teceo 24 LED 500mA	40 Watts	6.00 Metres	Steel	
Y	5	STREET LIGHTING	FOOTPATH BETWEEN GILBEY ROAD	GRIMSBY	525337.73	410673.93	2020	05/10/2020	68333	Urbis	Teceo 24 LED 500mA	40 Watts	6.00 Metres	Steel	
Y	6	STREET LIGHTING	FOOTPATH BETWEEN GILBEY ROAD	GRIMSBY	525312.25	410665.38	2020	05/10/2020	68334	Urbis	Teceo 24 LED 500mA	40 Watts	6.00 Metres	Steel	
Y	1	STREET LIGHTING	ESTATE ROAD 1	GRIMSBY	525292.68	410790.05	1992		48075	1 Urbis LED	Teceo 48 LED 500mA	79 Watts	10.00 Metres	Galvanised Steel	
Y	2	STREET LIGHTING	ESTATE ROAD 1	GRIMSBY	525288.93	410815.4	1992		48076	1 Urbis LED	Teceo 48 LED 500mA	79 Watts	10.00 Metres	Galvanised Steel	
Y	3	STREET LIGHTING	ESTATE ROAD 1	GRIMSBY	525279.1	410837.44	2008		48077	1 Urbis LED	Teceo 48 LED 500mA	79 Watts	10.00 Metres	Steel	
Y	4	STREET LIGHTING	ESTATE ROAD 1	GRIMSBY	525259.66	410862.46	1992		48078	1 Urbis LED	Teceo 48 LED 500mA	79 Watts	10.00 Metres	Galvanised Steel	
Y	5	STREET LIGHTING	ESTATE ROAD 1	GRIMSBY	525225.43	410884.83	1994		48079	1 Urbis LED	Teceo 48 LED 500mA	79 Watts	10.00 Metres	Galvanised Steel	
Y	6	STREET LIGHTING	ESTATE ROAD 1	GRIMSBY	525179.66	410883.52	2009		48080	1 Urbis LED	Teceo 48 LED 500mA	79 Watts	10.00 Metres	Steel	
Y	7	STREET LIGHTING	ESTATE ROAD 1	GRIMSBY	525138.34	410893.44	1994		48081	1 Urbis LED	Teceo 48 LED 500mA	79 Watts	10.00 Metres	Galvanised Steel	
Y	8	STREET LIGHTING	ESTATE ROAD 1	GRIMSBY	525097.58	410903.01	1994		48082	1 Urbis LED	Teceo 48 LED 500mA	79 Watts	10.00 Metres	Galvanised Steel	
Y	9	STREET LIGHTING	ESTATE ROAD 1	GRIMSBY	525061.64	410911.24	1994		48083	1 Urbis LED	Teceo 48 LED 500mA	79 Watts	10.00 Metres	Galvanised Steel	
Y	10	STREET LIGHTING	ESTATE ROAD 1	GRIMSBY	525024.42	410933.01	2005		48084	1 Urbis LED	Teceo 48 LED 500mA	79 Watts	10.00 Metres	Stainless Steel	
Y	11	STREET LIGHTING	ESTATE ROAD 1	GRIMSBY	524981.03	410930.43	1994		48085	1 Urbis LED	Teceo 48 LED 500mA	79 Watts	10.00 Metres	Galvanised Steel	
Y	12	STREET LIGHTING	ESTATE ROAD 1	GRIMSBY	524938.5	410940.65	1994		48086	1 Urbis LED	Teceo 48 LED 500mA	79 Watts	10.00 Metres	Galvanised Steel	
Y	13	STREET LIGHTING	ESTATE ROAD 1	GRIMSBY	524902.24	410962.02	1994		48087	1 Urbis LED	Teceo 48 LED 500mA	79 Watts	10.00 Metres	Galvanised Steel	
Y	14	STREET LIGHTING	ESTATE ROAD 1	GRIMSBY	524857.28	410959.49	1992		48088	1 Urbis LED	Teceo 48 LED 500mA	79 Watts	10.00 Metres	Galvanised Steel	
Y	15	STREET LIGHTING	ESTATE ROAD 1	GRIMSBY	524819.2	410981.06	1992		48089	1 Urbis LED	Teceo 48 LED 500mA	79 Watts	10.00 Metres	Galvanised Steel	
Y	16	STREET LIGHTING	ESTATE ROAD 1	GRIMSBY	524777.28	410978.63	1994		48090	1 Urbis LED	Teceo 48 LED 500mA	79 Watts	10.00 Metres	Galvanised Steel	
Y	17	STREET LIGHTING	ESTATE ROAD 1	GRIMSBY	524738.19	411001.41	1992		48091	1 Urbis LED	Teceo 48 LED 500mA	79 Watts	8.00 Metres	Steel	
Y	18	STREET LIGHTING	ESTATE ROAD 1	GRIMSBY	524694.24	410997.66	1994		48092	1 Urbis LED	Teceo 48 LED 500mA	79 Watts	10.00 Metres	Galvanised Steel	
Y	19	STREET LIGHTING	ESTATE ROAD 1	GRIMSBY	524653.13	411007.18	1994		48093	1 Urbis LED	Teceo 48 LED 500mA	79 Watts	10.00 Metres	Galvanised Steel	
Y	20	STREET LIGHTING	ESTATE ROAD 1	GRIMSBY	524618.25	411016.28	2019	25/04/2019	67406	Urbis	Teceo 32 LED 500mA	52 Watts	10.00 Metres	Galvanised Steel	
Y	21	STREET LIGHTING	ESTATE ROAD 1	GRIMSBY	524587.08	411022.57	2019	25/04/2019	67407	Urbis	Teceo 32 LED 500mA	52 Watts	10.00 Metres	Galvanised Steel	
Y	1	STREET LIGHTING	ESTATE ROAD 2	GRIMSBY	525285.82	410661.43	2004		61575	1 Urbis LED	Teceo 40 LED 500mA	64 Watts	10.00 Metres	Stainless Steel	
Y	1	STREET LIGHTING	ESTATE ROAD 2	GRIMSBY	525285.82	410661.43	2004		62107	1 Urbis LED	Teceo 40 LED 500mA	64 Watts	10.00 Metres	Stainless Steel	
Y	2	STREET LIGHTING	ESTATE ROAD 2	GRIMSBY	525280.45	410634.57	2020	05/10/2020	48096	1 Urbis LED	Teceo 40 LED 500mA	64 Watts	10.00 Metres	Galvanised Steel	
Y	3	STREET LIGHTING	ESTATE ROAD 2	GRIMSBY	525262.73	410614.06	2020	05/10/2020	48097	1 Urbis LED	Teceo 40 LED 500mA	64 Watts	10.00 Metres	Galvanised Steel	
Y	4	STREET LIGHTING	ESTATE ROAD 2	GRIMSBY	525243.24	410596.72	2020	05/10/2020	48098	1 Urbis LED	Teceo 40 LED 500mA	64 Watts	10.00 Metres	Galvanised Steel	
Y	5	STREET LIGHTING	ESTATE ROAD 2	GRIMSBY	525225.51	410581.03	2020	05/10/2020	48099	1 Urbis LED	Teceo 40 LED 500mA	64 Watts	10.00 Metres	Galvanised Steel	
Y	6	STREET LIGHTING	ESTATE ROAD 2	GRIMSBY	525200.2	410564.7	2017	27/10/2017	48100	1 Urbis LED	Teceo 40 LED 500mA	64 Watts	10.00 Metres	Galvanised Steel	
Y	7	STREET LIGHTING	ESTATE ROAD 2	GRIMSBY	525173.62	410541.15		20/02/2025	48101	Urbis	Teceo 40 LED 500mA	64 Watts	12.00 Metres	Galvanised Steel	
Y	8	STREET LIGHTING	ESTATE ROAD 2	GRIMSBY	525152.14	410523.49	2018	07/11/2018	48102	Urbis	Teceo 40 LED 500mA	64 Watts	12.00 Metres	Galvanised Steel	
Y	9	STREET LIGHTING	ESTATE ROAD 2	GRIMSBY	525120.2	410513.18	2017	27/10/2017	48103	1 Urbis LED	Teceo 40 LED 500mA	64 Watts	10.00 Metres	Galvanised Steel	
Y	10	STREET LIGHTING	ESTATE ROAD 2	GRIMSBY	525096.91	410479.64	2017	27/10/2017	48104	1 Urbis LED	Teceo 40 LED 500mA	64 Watts	10.00 Metres	Galvanised Steel	
Y	11	STREET LIGHTING	ESTATE ROAD 2	GRIMSBY	525062.99	410466.09	2013		48105	1 Urbis LED	Teceo 40 LED 500mA	64 Watts	10.00 Metres	Galvanised Steel	
Y	12	STREET LIGHTING	ESTATE ROAD 2	GRIMSBY	525043.87	410435.04	2017	27/10/2017	48106	1 Urbis LED	Teceo 40 LED 500mA	64 Watts	10.00 Metres	Galvanised Steel	
Y	13	STREET LIGHTING	ESTATE ROAD 2	GRIMSBY	525014.12	410426.22	2017	27/10/2017	48107	1 Urbis LED	Teceo 40 LED 500mA	64 Watts	10.00 Metres	Galvanised Steel	
Y	14	STREET LIGHTING	ESTATE ROAD 2	GRIMSBY	524994.63	410395.71	2017	27/10/2017	48108	1 Urbis LED	Teceo 40 LED 500mA	64 Watts	10.00 Metres	Galvanised Steel	
Y	15	STREET LIGHTING	ESTATE ROAD 2	GRIMSBY	524968.64	410373.95	2016	08/03/2016	48109	1 Urbis LED	Teceo 40 LED 500mA	64 Watts	8.00 Metres	Galvanised Steel	
Y	16	STREET LIGHTING	ESTATE ROAD 2	GRIMSBY	524946.36	410353.79	2020	05/10/2020	67989	Urbis	Teceo 40 LED 500mA	64 Watts	12.00 Metres	Galvanised Steel	
Y	17	STREET LIGHTING	ESTATE ROAD 2	GRIMSBY	524919.12	410332.95	2022	29/09/2022	48111	Urbis	Teceo 40 LED 500mA	64 Watts	12.00 Metres	Galvanised Steel	
Y	18	STREET LIGHTING	ESTATE ROAD 2	GRIMSBY	524887.29	410308.5	2010		48112	1 Urbis LED	Teceo 40 LED 500mA	64 Watts	10.00 Metres	Galvanised Steel	
Y	19	STREET LIGHTING	ESTATE ROAD 2	GRIMSBY	524862.23	410288.25	2015	30/07/2015	48113	1 Urbis LED	Teceo 40 LED 500mA	64 Watts	8.00 Metres	Galvanised Steel	
Y	20	STREET LIGHTING	ESTATE ROAD 2	GRIMSBY	524829.35	410273.74	2017	27/10/2017	48114	1 Urbis LED	Teceo 40 LED 500mA	64 Watts	10.00 Metres	Galvanised Steel	
Y	21	STREET LIGHTING	ESTATE ROAD 2	GRIMSBY	524805.77	410242.17	2017	27/10/2017	48115	1 Urbis LED	Teceo 40 LED 500mA	64 Watts	10.00 Metres	Galvanised Steel	
Y	22	STREET LIGHTING	ESTATE ROAD 2	GRIMSBY	524764.63	410222.22	2017	27/10/2017	48116	Urbis	AXIA 3.2 32 LED 630 mA	62 Watts	10.00 Metres	Galvanised Steel	
Y	23	STREET LIGHTING	ESTATE ROAD 2	GRIMSBY	524744.25	410189.01			48117	Urbis	AXIA 3.2 32 LED 630 mA	62 Watts	10.00 Metres	Galvanised Steel	
Y	1	STREET LIGHTING	ESTATE ROAD 3	GRIMSBY	524878	410977	2001		48118	1 Urbis LED	Teceo 48 LED 500mA	79 Watts	8.00 Metres	Galvanised Steel	
Y	2	STREET LIGHTING	ESTATE ROAD 3	GRIMSBY	524897.99	411014.78	1969		48119	1 Urbis LED	Teceo 48 LED 500mA	79 Watts	8.00 Metres	Galvanised Steel	
Y	1	STREET LIGHTING	ESTATE ROAD 4	GRIMSBY	524718.89	411018.21	2008		48120	1 Urbis LED	Teceo 48 LED 500mA	79 Watts	10.00 Metres	Steel	
Y	2	STREET LIGHTING	ESTATE ROAD 4	GRIMSBY	524731.31	411058.83	2015	23/07/2015	48121	1 Urbis LED	Teceo 48 LED 500mA	79 Watts	8.00 Metres	Galvanised Steel	
Y	1	STREET LIGHTING	ESTATE ROAD 5	GRIMSBY	524438.25	410778.5	2019	25/04/2019	67408	Urbis	Teceo 32 LED 500mA	52 Watts	10.00 Metres	Galvanised Steel	
Y	2	STREET LIGHTING	ESTATE ROAD 5	GRIMSBY	524464.74	410758.93	2019	25/04/2019	67409	Urbis	Teceo 32 LED 500mA	52 Watts	10.00 Metres	Galvanised Steel	
Y	3	STREET LIGHTING	ESTATE ROAD 5	GRIMSBY	524478.63	410780.6	2019	25/04/2019	67410	Urbis	Teceo 32 LED 500mA	52 Watts	10.00 Metres	Galvanised Steel	
Y	4	STREET LIGHTING	ESTATE ROAD 5	GRIMSBY	524500.68	410773.25	2019	25/04/2019	67411	Urbis	Teceo 32 LED 500mA	52 Watts	10.00 Metres	Galvanised Steel	
Y	6	STREET LIGHTING	ESTATE ROAD 5	GRIMSBY	524540.03	410781.01	1973		48127	1 Urbis LED	Teceo 32 LED 500mA	52 Watts	10.00 Metres	Galvanised Steel	
Y	7	STREET LIGHTING	ESTATE ROAD 5	GRIMSBY	524581.42	410777.22	2009		48128	1 Urbis LED	Teceo 32 LED 500mA	52 Watts	10.00 Metres	Steel	
Y	8	STREET LIGHTING	ESTATE ROAD 5	GRIMSBY	524611.32	410789.62	1973		48129	1 Urbis LED	Teceo 32 LED 500mA	52 Watts	10.00 Metres	Galvanised Steel	
Y	9	STREET LIGHTING	ESTATE ROAD 5	GRIMSBY	524641.3	410787.62	1973		48130	1 Urbis LED	Teceo 32 LED 500mA	52 Watts	10.00 Metres	Steel	
Y	10	STREET LIGHTING	ESTATE ROAD 5	GRIMSBY	524671.42	410785.09	2017	27/10/2017	48131	1 Urbis LED	Teceo 32 LED 500mA	52 Watts	10.00 Metres	Galvanised Steel	
Y	11	STREET LIGHTING	ESTATE ROAD 5	GRIMSBY	524700.29	410782.55	2017	27/10/2017	48132	1 Urbis LED	Teceo 32 LED 500mA	52 Watts	10.00 Metres	Galvanised Steel	
Y	12	STREET LIGHTING	ESTATE ROAD 5	GRIMSBY	524735.14	410778.36	2008		48133	1 Urbis LED	Teceo 32 LED 500mA	52 Watts	10.00 Metres	Steel	
Y	13	STREET LIGHTING	ESTATE ROAD 5	GRIMSBY	524766.61	410769.52	2017	27/10/2017	48134	Urbis	AXIA 3.2 24 LED 540mA	41 Watts	10.00 Metres	Galvanised Steel	
Y	14	STREET LIGHTING	ESTATE ROAD 5	GRIMSBY	524798.01	410758.76	2017	27/10/2017	48135	1 Urbis LED	Teceo 32 LED 500mA	52 Watts	10.00 Metres	Galvanised Steel	
Y	15	STREET LIGHTING	ESTATE ROAD 5	GRIMSBY	524824.59	410750.4	1973		48136	Urbis	AXIA 3.2 24 LED 540mA	41 Watts	10.00 Metres	Steel	
Y	16	STREET LIGHTING	ESTATE ROAD 5	GRIMSBY	524860.79	410736.35	1973		48137	1 Urbis LED	Teceo 32 LED 500mA	52 Watts	10.00 Metres	Galvanised Steel	
Y	17	STREET LIGHTING	ESTATE ROAD 5	GRIMSBY	524888.79	410727.27	2003		48138	1 Urbis LED	Teceo 32 LED 500mA	52 Watts	10.00 Metres	Stainless Steel	
Y	18	STREET LIGHTING	ESTATE ROAD 5	GRIMSBY	524915.43	410717.32	2008		48139	1 Urbis LED	Teceo 32 LED 500mA	52 Watts	10.00 Metres	Steel	
Y	19	STREET LIGHTING	ESTATE ROAD 5	GRIMSBY	524942.81	410706.1	1973		48140	1 Urbis LED	Teceo 32 LED 500mA	52 Watts	10.00 Metres	Steel	
Y	20	STREET LIGHTING	ESTATE ROAD 5	GRIMSBY	524974.72	410695.78	2008		48141	1 Urbis LED	Teceo 32 LED 500mA	52 Watts	10.00 Metres	Steel	
Y	21	STREET LIGHTING	ESTATE ROAD 5	GRIMSBY	525005.99	410684.37	2008		48142	1 Urbis LED	Teceo 32 LED 500mA	52 Watts	10.00 Metres	Steel	
Y	22	STREET LIGHTING	ESTATE ROAD 5	GRIMSBY	525038.81	410671.37	2008		48143	1 Urbis LED	Teceo 32 LED 500mA	52 Watts	10.00 Metres	Steel	
Y	23	STREET LIGHTING	ESTATE ROAD 5	GRIMSBY	525065.6	410656.23	2007		48144	1 Urbis LED	Teceo 32 LED 500mA	52 Watts	10.00 Metres	Steel	
Y	24	STREET LIGHTING	ESTATE ROAD 5	GRIMSBY	525091.76	410639.81	2008		48145	Urbis	AXIA 3.2 24 LED 540mA	41 Watts	10.00 Metres	Steel	
Y	25	STREET LIGHTING	ESTATE ROAD 5	GRIMSBY	525113.19	410621.17	2005		48146	1 Urbis LED	Teceo 32 LED 500mA	52 Watts	10.00 Metres	Stainless Steel	
Y	26	STREET LIGHTING	ESTATE ROAD 5	GRIMSBY	525141.36	410594.98	2008		48147	1 Urbis LED	Teceo 32 LED 500mA	52 Watts	10.00 Metres	Steel	
Y	27	STREET LIGHTING	ESTATE ROAD 5	GRIMSBY	525162.73	410569.07	2008		48148	1 Urbis LED	Teceo 32 LED 500mA	52 Watts	10.00 Metres	Steel	
Y	1	STREET LIGHTING	ESTATE ROAD 6	GRIMSBY	524602.28	410766.04	1973		48151	1 Urbis LED	Teceo 32 LED 500mA	52 Watts	10.00 Metres	Galvanised Steel	
Y	2	STREET LIGHTING	ESTATE ROAD 6	GRIMSBY	524612.92	410739.46	2005		48152	1 Urbis LED	Teceo 32 LED 500mA	52 Watts	10.00 Metres	Stainless Steel	
Y	3	STREET LIGHTING	ESTATE ROAD 6	GRIMSBY	524610.64	410701.1	2017	27/10/2017	48153	1 Urbis LED	Teceo 32 LED 500mA	52 Watts	10.00 Metres	Galvanised Steel	
Y	4	STREET LIGHTING	ESTATE ROAD 6	GRIMSBY	524597.16	410668.26	2008		48154	1 Urbis LED	Teceo 32 LED 500mA	52 Watts	10.00 Metres	Steel	
Y	5	STREET LIGHTING	ESTATE ROAD 6	GRIMSBY	524600.69	410638.37	2008		48155	1 Urbis LED	Teceo 32 LED 500mA	52 Watts	10.00 Metres	Steel	

Y	6	STREET LIGHTING	ESTATE ROAD 6	GRIMSBY	524609.13	410609.03	2008		48156	1 Urbis LED	Teceo 32 LED 500mA	52 Watts	10.00 Metres	Steel	
Y	7	STREET LIGHTING	ESTATE ROAD 6	GRIMSBY	524620.01	410585.02	1973		48157	1 Urbis LED	Teceo 32 LED 500mA	52 Watts	10.00 Metres	Steel	
Y	8	STREET LIGHTING	ESTATE ROAD 6	GRIMSBY	524638.74	410559.58	2002		48158	1 Urbis LED	Teceo 32 LED 500mA	52 Watts	10.00 Metres	Galvanised Steel	
Y	9	STREET LIGHTING	ESTATE ROAD 6	GRIMSBY	524659.78	410531.72	2008		48159	1 Urbis LED	Teceo 32 LED 500mA	52 Watts	10.00 Metres	Steel	
Y	10	STREET LIGHTING	ESTATE ROAD 6	GRIMSBY	524693.44	410512.97	2008		48160	1 Urbis LED	Teceo 32 LED 500mA	52 Watts	10.00 Metres	Steel	
Y	11	STREET LIGHTING	ESTATE ROAD 6	GRIMSBY	524698.87	410482.68	2008		48161	1 Urbis LED	Teceo 32 LED 500mA	52 Watts	10.00 Metres	Steel	
Y	12	STREET LIGHTING	ESTATE ROAD 6	GRIMSBY	524727.1	410468.44	2007		48162	1 Urbis LED	Teceo 32 LED 500mA	52 Watts	10.00 Metres	Steel	
Y	13	STREET LIGHTING	ESTATE ROAD 6	GRIMSBY	524747.66	410453.96	2020	10/01/2020	67725	Urbis	Teceo 32 LED 500mA	52 Watts	12.00 Metres	Galvanised Steel	
Y	14	STREET LIGHTING	ESTATE ROAD 6	GRIMSBY	524768.87	410417.17	2017	27/10/2017	48164	1 Urbis LED	Teceo 32 LED 500mA	52 Watts	10.00 Metres	Galvanised Steel	
Y	15	STREET LIGHTING	ESTATE ROAD 6	GRIMSBY	524778.99	410384.9	1973		48165	1 Urbis LED	Teceo 32 LED 500mA	52 Watts	10.00 Metres	Steel	
Y	16	STREET LIGHTING	ESTATE ROAD 6	GRIMSBY	524813.44	410365.8	2008		48166	1 Urbis LED	Teceo 32 LED 500mA	52 Watts	10.00 Metres	Steel	
Y	17	STREET LIGHTING	ESTATE ROAD 6	GRIMSBY	524822.29	410334.14	2005		48167	1 Urbis LED	Teceo 32 LED 500mA	52 Watts	10.00 Metres	Stainless Steel	
Y	18	STREET LIGHTING	ESTATE ROAD 6	GRIMSBY	524853.42	410313.38	2017	27/10/2017	48168	1 Urbis LED	Teceo 32 LED 500mA	52 Watts	10.00 Metres	Galvanised Steel	
Y	1	STREET LIGHTING	ESTATE ROAD 7	GRIMSBY	524711.91	410443.88	2008		48169	1 Urbis LED	Teceo 48 LED 700mA	104 Watts	10.00 Metres	Steel	
Y	2	STREET LIGHTING	ESTATE ROAD 7	GRIMSBY	524669.88	410426.04	2008		48170	1 Urbis LED	Teceo 48 LED 700mA	104 Watts	10.00 Metres	Steel	
Y	3	STREET LIGHTING	ESTATE ROAD 7	GRIMSBY	524645.32	410405.66	2008		48171	1 Urbis LED	Teceo 48 LED 700mA	104 Watts	10.00 Metres	Steel	
Y	4	STREET LIGHTING	ESTATE ROAD 7	GRIMSBY	524622.8	410371.03	2008		48172	1 Urbis LED	Teceo 48 LED 700mA	104 Watts	10.00 Metres	Steel	
Y	1	STREET LIGHTING	ESTATE ROAD 8	GRIMSBY	524725.83	410119.99	2008		48173	1 Urbis LED	Teceo 48 LED 500mA	79 Watts	10.00 Metres	Steel	
Y	2	STREET LIGHTING	ESTATE ROAD 8	GRIMSBY	524703.13	410111.87	2007		48174	1 Urbis LED	Teceo 48 LED 500mA	79 Watts	10.00 Metres	Steel	
Y	3	STREET LIGHTING	ESTATE ROAD 8	GRIMSBY	524664.15	410142.29	2008		48175	1 Urbis LED	Teceo 48 LED 500mA	79 Watts	10.00 Metres	Steel	
Y	4	STREET LIGHTING	ESTATE ROAD 8	GRIMSBY	524627.4	410149.7	2008		48176	1 Urbis LED	Teceo 48 LED 500mA	79 Watts	10.00 Metres	Steel	
Y	5	STREET LIGHTING	ESTATE ROAD 8	GRIMSBY	524616.33	410182.68	2008		48177	1 Urbis LED	Teceo 48 LED 500mA	79 Watts	10.00 Metres	Steel	
Y	6	STREET LIGHTING	ESTATE ROAD 8	GRIMSBY	524633.31	410216.13	2008		48178	1 Urbis LED	Teceo 48 LED 500mA	79 Watts	10.00 Metres	Steel	
Y	7	STREET LIGHTING	ESTATE ROAD 8	GRIMSBY	524663.16	410229.57	2008		48179	1 Urbis LED	Teceo 48 LED 500mA	79 Watts	10.00 Metres	Steel	
Y	8	STREET LIGHTING	ESTATE ROAD 8	GRIMSBY	524681.31	410200.72	2008		48180	1 Urbis LED	Teceo 48 LED 500mA	79 Watts	10.00 Metres	Steel	
Y	9	STREET LIGHTING	ESTATE ROAD 8	GRIMSBY	524703.07	410174.03	2008		48181	1 Urbis LED	Teceo 48 LED 500mA	79 Watts	10.00 Metres	Steel	
Y	10	STREET LIGHTING	ESTATE ROAD 8	GRIMSBY	524731.66	410156.22	2008		48182	1 Urbis LED	Teceo 48 LED 500mA	79 Watts	10.00 Metres	Steel	
Y	11	STREET LIGHTING	ESTATE ROAD 8	GRIMSBY	524746.14	410120.43	2008		48183	1 Urbis LED	Teceo 48 LED 500mA	79 Watts	10.00 Metres	Steel	
Y	12	STREET LIGHTING	ESTATE ROAD 8	GRIMSBY	524772.79	410104.61	2008		48184	1 Urbis LED	Teceo 48 LED 500mA	79 Watts	10.00 Metres	Steel	
Y	13	STREET LIGHTING	ESTATE ROAD 8	GRIMSBY	524792.31	410080.44	2008		48185	1 Urbis LED	Teceo 48 LED 500mA	79 Watts	10.00 Metres	Steel	
Y	14	STREET LIGHTING	ESTATE ROAD 8	GRIMSBY	524812.31	410047.59	2008		48186	1 Urbis LED	Teceo 48 LED 500mA	79 Watts	10.00 Metres	Steel	
Y	1	STREET LIGHTING	LAFOREY ROAD	GRIMSBY	524565	411084.71	1994		52151	Urbis	AXIA 3.2 24 LED 540mA	41 Watts	8.00 Metres	Galvanised Steel	
Y	2	STREET LIGHTING	LAFOREY ROAD	GRIMSBY				20/02/2025	70189				8.00 Metres	Galvanised Steel	
Y	3	STREET LIGHTING	LAFOREY ROAD	GRIMSBY	524516.01	411116.55	2016		52153	Urbis	AXIA 3.2 24 LED 540mA	41 Watts	8.00 Metres	Galvanised Steel	
Y	4	STREET LIGHTING	LAFOREY ROAD	GRIMSBY	524491.46	411119.9	1994		52154	Urbis	AXIA 3.2 24 LED 540mA	41 Watts	8.00 Metres	Galvanised Steel	
Y	5	STREET LIGHTING	LAFOREY ROAD	GRIMSBY	524462.6	411119.33	1994		52155	1 Urbis LED	Teceo 32 LED 500mA	52 Watts	8.00 Metres	Galvanised Steel	
Y	6	STREET LIGHTING	LAFOREY ROAD	GRIMSBY	524435.26	411107.25	1994		52156	1 Urbis LED	Teceo 32 LED 500mA	52 Watts	8.00 Metres	Galvanised Steel	
Y	7	STREET LIGHTING	LAFOREY ROAD	GRIMSBY	524408.67	411114.02	1994		52157	1 Urbis LED	Teceo 32 LED 500mA	52 Watts	8.00 Metres	Galvanised Steel	
Y	8	STREET LIGHTING	LAFOREY ROAD	GRIMSBY	524381.59	411102.75	1994		52158	Urbis	AXIA 3.2 24 LED 540mA	41 Watts	8.00 Metres	Galvanised Steel	
Y	9	STREET LIGHTING	LAFOREY ROAD	GRIMSBY	524364.62	411103.51	2008		52159	1 Urbis LED	Teceo 32 LED 500mA	52 Watts	8.00 Metres	Steel	
Y	10	STREET LIGHTING	LAFOREY ROAD	GRIMSBY	524341.59	411108.58	1994		52160	Urbis	AXIA 3.2 24 LED 540mA	41 Watts	8.00 Metres	Galvanised Steel	
Y	11	STREET LIGHTING	LAFOREY ROAD	GRIMSBY	524323.36	411114.78	1994		52161	1 Urbis LED	Teceo 32 LED 500mA	52 Watts	8.00 Metres	Galvanised Steel	
Y	12	STREET LIGHTING	LAFOREY ROAD	GRIMSBY	524313	411134.35	2023	27/03/2023	69214	Urbis	AXIA 3.2 24 LED 540mA	41 Watts	8.00 Metres	Galvanised Steel	
Y	13	STREET LIGHTING	LAFOREY ROAD	GRIMSBY	524289.94	411128.96	1994		52163	1 Urbis LED	Teceo 32 LED 500mA	52 Watts	8.00 Metres	Galvanised Steel	
Y	1	STREET LIGHTING	SARGON WAY	GRIMSBY	524468.17	411098.33	1992		56601	1 Urbis LED	Teceo 24 LED 500mA	40 Watts	8.00 Metres	Galvanised Steel	
Y	3	STREET LIGHTING	SARGON WAY	GRIMSBY	524475.76	411063.33	1992		56603	1 Urbis LED	Teceo 24 LED 500mA	40 Watts	8.00 Metres	Galvanised Steel	
Y	4	STREET LIGHTING	SARGON WAY	GRIMSBY	524454.5	411045.42	2006		56604	1 Urbis LED	Teceo 24 LED 500mA	40 Watts	8.00 Metres	Stainless Steel	
Y	1	STREET LIGHTING	ESTUARY WAY	GRIMSBY	525731.47	410825.7	1996		48187	1 Urbis LED	Teceo 32 LED 500mA	52 Watts	8.00 Metres	Galvanised Steel	
Y	2	STREET LIGHTING	ESTUARY WAY	GRIMSBY	525744.44	410791.57	1996		48188	1 Urbis LED	Teceo 32 LED 500mA	52 Watts	8.00 Metres	Galvanised Steel	
Y	3	STREET LIGHTING	ESTUARY WAY	GRIMSBY	525768.54	410762.71	1996		48189	1 Urbis LED	Teceo 32 LED 500mA	52 Watts	8.00 Metres	Galvanised Steel	
Y	4	STREET LIGHTING	ESTUARY WAY	GRIMSBY	525789	410735.47	1996		48190	1 Urbis LED	Teceo 32 LED 500mA	52 Watts	8.00 Metres	Galvanised Steel	
Y	6	STREET LIGHTING	ESTUARY WAY	GRIMSBY	525826.46	410736.28	1996		48191	1 Urbis LED	Teceo 32 LED 500mA	52 Watts	8.00 Metres	Galvanised Steel	
Y	7	STREET LIGHTING	ESTUARY WAY	GRIMSBY	525854.62	410755.29	1996		48192	1 Urbis LED	Teceo 32 LED 500mA	52 Watts	8.00 Metres	Galvanised Steel	
Y	8	STREET LIGHTING	ESTUARY WAY	GRIMSBY	525876.89	410770.99	1996		48193	1 Urbis LED	Teceo 32 LED 500mA	52 Watts	8.00 Metres	Galvanised Steel	
Y	1	STREET LIGHTING	FOOTPATH BETWEEN GENESIS WAY	GRIMSBY	524172.41	411230.57	2008		48712	Urbis	Axia 8 LED 350mA	10 Watts	6.00 Metres	Steel	
Y	2	STREET LIGHTING	FOOTPATH BETWEEN GENESIS WAY	GRIMSBY	524194.67	411210.82	2008		48713	Urbis	Axia 8 LED 350mA	10 Watts	6.00 Metres	Steel	
Y	3	STREET LIGHTING	FOOTPATH BETWEEN GENESIS WAY	GRIMSBY	524214.7	411193.8	2008		48714	Urbis	Axia 8 LED 350mA	10 Watts	6.00 Metres	Steel	
Y	4	STREET LIGHTING	FOOTPATH BETWEEN GENESIS WAY	GRIMSBY	524227.1	411169.1	2008		48715	Urbis	Axia 8 LED 350mA	10 Watts	6.00 Metres	Steel	
Y	5	STREET LIGHTING	FOOTPATH BETWEEN GENESIS WAY	GRIMSBY	524252.7	411158.2	2008		48716	Urbis	Axia 8 LED 350mA	10 Watts	6.00 Metres	Steel	
Y	1	STREET LIGHTING	ATHENA DRIVE	GRIMSBY	525471.16	410751.99	1997		43463	1 Urbis LED	Teceo 24 LED 500mA	40 Watts	8.00 Metres	Galvanised Steel	
Y	2	STREET LIGHTING	ATHENA DRIVE	GRIMSBY	525471.37	410780.45	1996		43464	1 Urbis LED	Teceo 24 LED 500mA	40 Watts	8.00 Metres	Galvanised Steel	
Y	3	STREET LIGHTING	ATHENA DRIVE	GRIMSBY	525472.18	410809.51	1996		43465	1 Urbis LED	Teceo 24 LED 500mA	40 Watts	8.00 Metres	Galvanised Steel	
Y	4	STREET LIGHTING	ATHENA DRIVE	GRIMSBY	525458.81	410812.55	1999		43466	1 Urbis LED	Teceo 24 LED 500mA	40 Watts	8.00 Metres	Galvanised Steel	
Y	5	STREET LIGHTING	ATHENA DRIVE	GRIMSBY	525478.05	410834.22	1999		43467	1 Urbis LED	Teceo 24 LED 500mA	40 Watts	8.00 Metres	Galvanised Steel	
Y	6	STREET LIGHTING	ATHENA DRIVE	GRIMSBY	525454.15	410835.84	1999		43468	1 Urbis LED	Teceo 24 LED 500mA	40 Watts	8.00 Metres	Galvanised Steel	
Y	7	STREET LIGHTING	ATHENA DRIVE	GRIMSBY	525461.45	410853.77	1999		43469	1 Urbis LED	Teceo 24 LED 500mA	40 Watts	8.00 Metres	Galvanised Steel	
Y	8	STREET LIGHTING	ATHENA DRIVE	GRIMSBY	525471.98	410881.21	1998		43470	1 Urbis LED	Teceo 24 LED 500mA	40 Watts	8.00 Metres	Galvanised Steel	
Y	9	STREET LIGHTING	ATHENA DRIVE	GRIMSBY	525461.08	410915.75	2020	06/07/2020	67972	Urbis	Teceo 24 LED 500mA	40 Watts	8.00 Metres	Galvanised Steel	
Y	1	STREET LIGHTING	ATHENIAN WAY	GRIMSBY	524305.64	411106.43	1997		43472	1 Urbis LED	Teceo 16 LED 500mA	28 Watts	8.00 Metres	Galvanised Steel	
Y	2	STREET LIGHTING	ATHENIAN WAY	GRIMSBY	524286.4	411088.2	1997		43473	1 Urbis LED	Teceo 16 LED 500mA	28 Watts	8.00 Metres	Galvanised Steel	
Y	3	STREET LIGHTING	ATHENIAN WAY	GRIMSBY	524299.31	411069.09	1997		43474	1 Urbis LED	Teceo 16 LED 500mA	28 Watts	8.00 Metres	Galvanised Steel	
Y	4	STREET LIGHTING	ATHENIAN WAY	GRIMSBY	524275.22	411061.81	2020	14/07/2020	67971	Urbis	Teceo 16 LED 500mA	25 Watts	8.00 Metres	Galvanised Steel	
Y	5	STREET LIGHTING	ATHENIAN WAY	GRIMSBY	524277.53	411040.1	1997		43476	1 Urbis LED	Teceo 16 LED 500mA	28 Watts	8.00 Metres	Galvanised Steel	
Y	1	STREET LIGHTING	GATE WAY	GRIMSBY	526265.37	410856.64	2019	25/04/2019	67413	Urbis	Teceo 48 LED 500mA	79 Watts	10.00 Metres	Galvanised Steel	
Y	2	STREET LIGHTING	GATE WAY	GRIMSBY	526298.17	410849.45	2019	25/04/2019	67414	Urbis	Teceo 48 LED 500mA	79 Watts	10.00 Metres	Galvanised Steel	
Y	3	STREET LIGHTING	GATE WAY	GRIMSBY	526329.4	410849.09	2019	25/04/2019	67415	Urbis	Teceo 48 LED 500mA	79 Watts	10.00 Metres	Galvanised Steel	
Y	1	STREET LIGHTING	WESTWARD HO	GRIMSBY	526508.23	408342.06	2024	08/07/2024	70122	Urbis	AXIA 3.3 48 LED 540mA	78 Watts	8.00 Metres	Galvanised Steel	
Y	2	STREET LIGHTING	WESTWARD HO	GRIMSBY	526466.54	408350.06	2024	08/07/2024	70123	Urbis	AXIA 3.3 48 LED 540mA	78 Watts	8.00 Metres	Galvanised Steel	
Y	3	STREET LIGHTING	WESTWARD HO	GRIMSBY	526424.52	408331.05	2024	08/07/2024	70124	Urbis	AXIA 3.3 48 LED 540mA	78 Watts	8.00 Metres	Galvanised Steel	
Y	4	STREET LIGHTING	WESTWARD HO	GRIMSBY	526389.5	408338.06	2024	08/07/2024	70125	Urbis	AXIA 3.3 48 LED 540mA	78 Watts	8.00 Metres	Galvanised Steel	
Y	5	STREET LIGHTING	WESTWARD HO	GRIMSBY	526351.81	408319.71	2024	08/07/2024	70126	Urbis	AXIA 3.3 48 LED 540mA	78 Watts	8.00 Metres	Galvanised Steel	
Y	6	STREET LIGHTING	WESTWARD HO	GRIMSBY	526309.46	408328.38	2024	08/07/2024	70127	Urbis	AXIA 3.3 48 LED 540mA	78 Watts	8.00 Metres	Galvanised Steel	
Y	7	STREET LIGHTING	WESTWARD HO	GRIMSBY	526264.9	408306.73	2024	08/07/2024	70128	Urbis	AXIA 3.3 48 LED 540mA	78 Watts	8.00 Metres	Galvanised Steel	
Y	8	STREET LIGHTING	WESTWARD HO	GRIMSBY	526220.41	408312.83	2024	08/07/2024	70129	Urbis	AXIA 3.3 48 LED 540mA	78 Watts	8.00 Metres	Galvanised Steel	
Y	9	STREET LIGHTING	WESTWARD HO	GRIMSBY	526178.53	408307.5	2024	08/07/2024	70130	Urbis	AXIA 3.3 48 LED 540mA	78 Watts	8.00 Metres	Galvanised Steel	
Y	10	STREET LIGHTING	WESTWARD HO	GRIMSBY	526143.89	408289.29	1970		60592	1 Urbis LED	Teceo 48 LED 700mA	104 Watts	8.00 Metres	Galvanised Steel	
Y	11	STREET LIGHTING	WESTWARD HO	GRIMSBY	526111.47	408293.65	2021	02/09/2021	68434	Urbis	Teceo 48 LED 700mA	104 Watts	8.00 Metres	Galvanised Steel	
Y	12	STREET LIGHTING	WESTWARD HO	GRIMSBY	526088.45	408295.45	2024	08/07/2024	70131	Urbis	AXIA 3.3 48 LED 540mA	78 Watts	8.00 Metres	Galvanised Steel	
Y	13	STREET LIGHTING	WESTWARD HO	GRIMSBY	526050.82	408281.05	1970		60595	Urbis	Axia 24 LED 540mA	41 Watts	8.00 Metres	Galvanised Steel	
Y	14	STREET LIGHTING	WESTWARD HO	GRIMSBY	526007.92	408290.53	1970		60596	1 Urbis LED	Teceo 48 LED 700mA	104 Watts	8.00 Metres	Galvanised Steel	
Y	15	STREET LIGHTING	WESTWARD HO	GRIMSBY	525976.73	408315.02	2024	08/07/2024	70132	Urbis	AXIA 3.3 48 LED 540mA	78 Watts	8.00 Metres	Galvanised Steel	
Y	16	STREET LIGHTING	WESTWARD HO	GRIMSBY	525941.79	408310.01	1970		60598	1 Urbis LED	Teceo 48 LED 700mA	104 Watts	8.00 Metres	Galvanised Steel	
Y	17	STREET LIGHTING	WESTWARD HO	GRIMSBY	525910.81	408335.65	2024	08/07/2024	70133	Urbis	AXIA 3.3 48 LED 540mA	78 Watts	8.00 Metres	Galvanised Steel	
Y	18	STREET LIGHTING	WESTWARD HO	GRIMSBY	525869.25	408331.55	1970		60600	1 Urbis LED	Teceo 48 LED 700mA	104 Watts	8.00 Metres	Galvanised Steel	
Y	19	STREET LIGHTING	WESTWARD HO	GRIMSBY	525831.87	408342.78	1970		60601	1 Urbis LED	Teceo 48 LED 700mA	104 Watts	8.00 Metres	Galvanised Steel	
Y	20	STREET LIGHTING	WESTWARD HO	GRIMSBY	525797.91	408352.24	1970		60602	1 Urbis LED	Teceo 48 LED 700mA	104 Watts	8.00 Metres	Galvanised Steel	
Y	21	STREET LIGHTING	WESTWARD HO	GRIMSBY	525762.82	408362.59	1970		60603	1 Urbis LED	Teceo 48 LED 700mA	104 Watts	8.00 Metres	Galvanised Steel	
Y	22	STREET LIGHTING	WESTWARD HO	GRIMSBY	525732.19	408383.1	1970		60604	1 Urbis LED	Teceo 48 LED 700mA	104 Watts	8.00 Metres	Galvanised Steel	
Y	23	STREET LIGHTING	WESTWARD HO	GRIMSBY	525695.98	408386.52	1970		60605	1 Urbis LED	Teceo 48 LED 700mA	104 Watts	8.00 Metres	Galvanised Steel	
Y	24	STREET LIGHTING	WESTWARD HO	GRIMSBY	525660.34	408375.81	2024	08/07/2024	70134	Urbis	AXIA 3.3 48 LED 540mA	78 Watts	8.00 Metres	Galvanised Steel	
Y	25	STREET LIGHTING	WESTWARD HO	GRIMSBY	525616.51	408389.09	2024	08/07/2024	70135	Urbis	AXIA 3.3 48 LED 540mA	78 Watts	8.00 Metres	Galvanised Steel	
Y	26	STREET LIGHTING	WESTWARD HO	GRIMSBY	525576.79	408377.12	2024	08/07/2024	70136	Urbis	AXIA 3.3 48 LED 540mA	78 Watts	8.00 Metres	Galvanised Steel	
Y	27	STREET LIGHTING	WESTWARD HO	GRIMSBY	525542.16	408390.46	2024	08/07/2024	70137	Urbis	AXIA 3.3 48 LED 540mA	78 Watts	8.00 Metres	Galvanised Steel	
Y	28	STREET LIGHTING	WESTWARD HO	GRIMSBY	525504.63	408377.67	1999		60610	1 Urbis LED	Teceo 48 LED 700mA	104 Watts	8.00 Metres	Galvanised Steel	
Y	29	STREET LIGHTING	WESTWARD HO	GRIMSBY	525470.21	408390.47	1970		60611	1 Urbis LED	Teceo 48 LED 700mA	104 Watts	10.00 Metres	Galvanised Steel	
Y	1	STREET LIGHTING	CLEE VILLAGE	GRIMSBY	529169	408638	2002		46218	Urbis	Axia 16 LED 350mA	19 Watts	6.00 Metres	Galvanised Steel	
Y	2	STREET LIGHTING	CLEE VILLAGE	GRIMSBY	529183.85	408537.3	1995		46219	Urbis	Axia 16 LED 350mA	19 Watts	6.00 Metres	Galvanised Steel	
Y	1	STREET LIGHTING	UPPER BURGESS STREET SOUTH OF	GRIMSBY	527177.77	409442.64	1998		59509	1 Urbis LED	Teceo 32 LED 500mA	52 Watts	8.00 Metres	Galvanised Steel	
Y	2	STREET LIGHTING	UPPER BURGESS STREET SOUTH OF	GRIMSBY	527206.49	409469.06	1998		59510	1 Urbis LED	Teceo 32 LED 500mA	52 Watts	8.00 Metres	Galvanised Steel	
Y	3	STREET LIGHTING	UPPER BURGESS STREET SOUTH OF	GRIMSBY	527218.96	409501.28	1998		59511	1 Urbis LED	Teceo 32 LED 500mA	52 Watts	8.00 Metres	Galvanised Steel	

Y	1	STREET LIGHTING	UPPER BURGESS STREET NORTH OF	GRIMSBY	527220.06	409663.76	2008		61935	1 Urbis LED	Teceo 32 LED 500mA	52 Watts	6.00 Metres	Steel	
Y	1	STREET LIGHTING	UPPER BURGESS STREET NORTH OF	GRIMSBY	527220.06	409663.76	2008		62469	WRTL		52 Watts	6.00 Metres	Steel	
Y	2	STREET LIGHTING	UPPER BURGESS STREET NORTH OF	GRIMSBY	527226.39	409638	2008		61936	1 Urbis LED	Teceo 32 LED 500mA	52 Watts	6.00 Metres	Steel	
Y	2	STREET LIGHTING	UPPER BURGESS STREET NORTH OF	GRIMSBY	527226.39	409638	2008		62470	WRTL		52 Watts	6.00 Metres	Steel	
Y	1	STREET LIGHTING	HOSPITAL OFF SCARTHO ROAD	GRIMSBY	526510.59	407062.69	2018	01/07/2018	51016	1 Urbis LED	Teceo 40 LED 500mA	64 Watts	12.00 Metres	Galvanised Steel	
Y	1	STREET LIGHTING	MARKET HALL SERVICE ROAD	GRIMSBY	526627.13	409304.25	1993		53322	1 Urbis LED	Teceo 40 LED 500mA	64 Watts	8.00 Metres	Steel	
Y	2	STREET LIGHTING	MARKET HALL SERVICE ROAD	GRIMSBY	526633.41	409285.32	1993		53323	1 Urbis LED	Teceo 40 LED 500mA	64 Watts	8.00 Metres	Steel	
Y	3	STREET LIGHTING	MARKET HALL SERVICE ROAD	GRIMSBY	526638.27	409272.15	1993		53324	1 Urbis LED	Teceo 40 LED 500mA	64 Watts	8.00 Metres	Steel	
Y	1	STREET LIGHTING	ASDA ACCESS ROADS TO	GRIMSBY	527504.97	409590.37	1990		66284	1 Urbis LED	Teceo 24 LED 500mA	40 Watts	10.00 Metres	Galvanised Steel	
Y	2	STREET LIGHTING	ASDA ACCESS ROADS TO	GRIMSBY	527508.21	409610.43	1990		66285	1 Urbis LED	Teceo 24 LED 500mA	40 Watts	10.00 Metres	Galvanised Steel	
Y	1	STREET LIGHTING	FOOTPATH BETWEEN UNITY ROAD	GRIMSBY	529138.79	408682.07	2011		62938	Urbis	Axia 16 LED 350mA	19 Watts	6.00 Metres	Steel	
Y	2	STREET LIGHTING	FOOTPATH BETWEEN UNITY ROAD	GRIMSBY	529164.86	408677.52	2011		62939	Urbis	Axia 16 LED 350mA	19 Watts	6.00 Metres	Steel	
Y	3	STREET LIGHTING	FOOTPATH BETWEEN UNITY ROAD	GRIMSBY	529183.15	408687.57	2011		62940	Urbis	Axia 16 LED 350mA	19 Watts	6.00 Metres	Steel	
Y	1	STREET LIGHTING	MFI ACCESS ROAD TO	GRIMSBY	527066.24	409559.03	1988		53032	1 Urbis LED	Ampera 48 LED 700mA	104 Watts	10.00 Metres	Galvanised Steel	
Y	1	STREET LIGHTING	LACEBY ROAD	GRIMSBY	526386.04	407883.97	2009		51958	1 Urbis LED	Teceo 48 LED 700mA	104 Watts	12.00 Metres	Steel	
Y	2	STREET LIGHTING	LACEBY ROAD	GRIMSBY	526352.66	407876.89	2009		51959	1 Urbis LED	Teceo 48 LED 700mA	104 Watts	12.00 Metres	Steel	
Y	3	STREET LIGHTING	LACEBY ROAD	GRIMSBY	526322.36	407853.06	2009		51960	1 Urbis LED	Teceo 48 LED 700mA	104 Watts	12.00 Metres	Steel	
Y	4	STREET LIGHTING	LACEBY ROAD	GRIMSBY	526285.54	407869.95	2009		51961	1 Urbis LED	Teceo 48 LED 700mA	104 Watts	12.00 Metres	Steel	
Y	5	STREET LIGHTING	LACEBY ROAD	GRIMSBY	526250.91	407876.87	2009		51962	Urbis	Teceo 48 LED 700mA	104 Watts	12.00 Metres	Steel	
Y	6	STREET LIGHTING	LACEBY ROAD	GRIMSBY	526213.08	407874.34	2009		51963	1 Urbis LED	Teceo 48 LED 700mA	104 Watts	12.00 Metres	Steel	
Y	7	STREET LIGHTING	LACEBY ROAD	GRIMSBY	526179.63	407901.7	2009		51964	1 Urbis LED	Teceo 48 LED 700mA	104 Watts	12.00 Metres	Steel	
Y	8	STREET LIGHTING	LACEBY ROAD	GRIMSBY	526143.25	407887.49			67357	Urbis	Teceo 48 LED 700mA	104 Watts			
Y	9	STREET LIGHTING	LACEBY ROAD	GRIMSBY	526106.49	407889.54	2009		51966	1 Urbis LED	Teceo 48 LED 700mA	104 Watts	12.00 Metres	Steel	
Y	10	STREET LIGHTING	LACEBY ROAD	GRIMSBY	526071.36	407892.24	2009		51967	1 Urbis LED	Teceo 48 LED 700mA	104 Watts	12.00 Metres	Steel	
Y	11	STREET LIGHTING	LACEBY ROAD	GRIMSBY	526035.55	407895.11	2009		51968	1 Urbis LED	Teceo 48 LED 700mA	104 Watts	12.00 Metres	Steel	
Y	12	STREET LIGHTING	LACEBY ROAD	GRIMSBY	526000.58	407894.44	2009		51969	1 Urbis LED	Teceo 48 LED 700mA	104 Watts	12.00 Metres	Steel	
Y	13	STREET LIGHTING	LACEBY ROAD	GRIMSBY	525960.21	407901.36	2009		51970	1 Urbis LED	Teceo 48 LED 700mA	104 Watts	12.00 Metres	Steel	
Y	14	STREET LIGHTING	LACEBY ROAD	GRIMSBY	525928.12	407888.86	2009		51971	1 Urbis LED	Teceo 48 LED 700mA	104 Watts	12.00 Metres	Steel	
Y	15	STREET LIGHTING	LACEBY ROAD	GRIMSBY	525894.85	407876.2	2009		51972	1 Urbis LED	Teceo 48 LED 700mA	104 Watts	12.00 Metres	Steel	
Y	16	STREET LIGHTING	LACEBY ROAD	GRIMSBY	525858.53	407862.68	2009		51973	1 Urbis LED	Teceo 48 LED 700mA	104 Watts	12.00 Metres	Steel	
Y	17	STREET LIGHTING	LACEBY ROAD	GRIMSBY	525824.41	407851.03	2009		51974	1 Urbis LED	Teceo 48 LED 700mA	104 Watts	12.00 Metres	Steel	
Y	18	STREET LIGHTING	LACEBY ROAD	GRIMSBY	525798.57	407822.99	2009		51975	1 Urbis LED	Teceo 48 LED 700mA	104 Watts	12.00 Metres	Steel	
Y	19	STREET LIGHTING	LACEBY ROAD	GRIMSBY	525759.55	407829.07	2009		51976	1 Urbis LED	Teceo 48 LED 700mA	104 Watts	12.00 Metres	Steel	
Y	20	STREET LIGHTING	LACEBY ROAD	GRIMSBY	525728.13	407799.51	2009		51977	1 Urbis LED	Teceo 48 LED 700mA	104 Watts	12.00 Metres	Steel	
Y	21	STREET LIGHTING	LACEBY ROAD	GRIMSBY	525691.64	407806.27	2009		51978	1 Urbis LED	Teceo 48 LED 700mA	104 Watts	12.00 Metres	Steel	
Y	22	STREET LIGHTING	LACEBY ROAD	GRIMSBY	525664.96	407780.42	2009		51979	1 Urbis LED	Teceo 48 LED 700mA	104 Watts	12.00 Metres	Steel	
Y	23	STREET LIGHTING	LACEBY ROAD	GRIMSBY	525626.78	407787.69	2009		51980	1 Urbis LED	Teceo 48 LED 700mA	104 Watts	12.00 Metres	Steel	
Y	24	STREET LIGHTING	LACEBY ROAD	GRIMSBY	525609.85	407764.79	1975		51981	1 Urbis LED	Teceo 48 LED 700mA	104 Watts	12.00 Metres	Galvanised Steel	
Y	25	STREET LIGHTING	LACEBY ROAD	GRIMSBY	525589.96	407777.86	1975		61756	1 Urbis LED	Teceo 48 LED 700mA	104 Watts	12.00 Metres	Galvanised Steel	
Y	25	STREET LIGHTING	LACEBY ROAD	GRIMSBY	525589.96	407777.86	1975		62288	1 Urbis LED	Teceo 48 LED 700mA	104 Watts	12.00 Metres	Galvanised Steel	
Y	26	STREET LIGHTING	LACEBY ROAD	GRIMSBY	525568.98	407754.38	1975		51982	1 Urbis LED	Teceo 48 LED 700mA	104 Watts	12.00 Metres	Galvanised Steel	
Y	27	STREET LIGHTING	LACEBY ROAD	GRIMSBY	525541.17	407766.26	1975		51983	1 Urbis LED	Teceo 48 LED 700mA	104 Watts	12.00 Metres	Galvanised Steel	
Y	28	STREET LIGHTING	LACEBY ROAD	GRIMSBY	525528.84	407745.73	1975		51984	1 Urbis LED	Teceo 48 LED 700mA	104 Watts	12.00 Metres	Galvanised Steel	
Y	29	STREET LIGHTING	LACEBY ROAD	GRIMSBY	525492.4	407760.67	2020	12/03/2020	67817	Urbis	Teceo 48 LED 700mA	104 Watts			
Y	30	STREET LIGHTING	LACEBY ROAD	GRIMSBY	525459.24	407738.82	1975		51985	1 Urbis LED	Teceo 48 LED 700mA	104 Watts	12.00 Metres	Galvanised Steel	
Y	31	STREET LIGHTING	LACEBY ROAD	GRIMSBY	525419.47	407752.72	1975		62290	1 Urbis LED	Teceo 48 LED 700mA	104 Watts	12.00 Metres	Galvanised Steel	
Y	32	STREET LIGHTING	LACEBY ROAD	GRIMSBY	525384.15	407732.01	1975		51986	1 Urbis LED	Teceo 48 LED 700mA	104 Watts	12.00 Metres	Galvanised Steel	
Y	33	STREET LIGHTING	LACEBY ROAD	GRIMSBY	525346.22	407746.09	1975		51987	1 Urbis LED	Teceo 48 LED 700mA	104 Watts	12.00 Metres	Galvanised Steel	
Y	34	STREET LIGHTING	LACEBY ROAD	GRIMSBY	525313.63	407725.38	1975		51988	1 Urbis LED	Teceo 48 LED 700mA	104 Watts	12.00 Metres	Galvanised Steel	
Y	35	STREET LIGHTING	LACEBY ROAD	GRIMSBY	525279.94	407740.29	1975		51989	1 Urbis LED	Teceo 48 LED 700mA	104 Watts	12.00 Metres	Galvanised Steel	
Y	36	STREET LIGHTING	LACEBY ROAD	GRIMSBY	525244.4	407719.39	1975		51990	1 Urbis LED	Teceo 48 LED 700mA	104 Watts	12.00 Metres	Galvanised Steel	
Y	37	STREET LIGHTING	LACEBY ROAD	GRIMSBY	525207.58	407733.57	1975		51991	1 Urbis LED	Teceo 48 LED 700mA	104 Watts	12.00 Metres	Galvanised Steel	
Y	38	STREET LIGHTING	LACEBY ROAD	GRIMSBY	525172.23	407731.27	1975		51992	1 Urbis LED	Teceo 48 LED 700mA	104 Watts	12.00 Metres	Galvanised Steel	
Y	39	STREET LIGHTING	LACEBY ROAD	GRIMSBY	525144.42	407728.55			67576	Urbis	Teceo 48 LED 700mA	104 Watts	12.00 Metres	Galvanised Steel	
Y	40	STREET LIGHTING	LACEBY ROAD	GRIMSBY	525115.9	407722.02	2020	05/11/2020	68003	Urbis	Teceo 48 LED 700mA	104 Watts	12.00 Metres	Galvanised Steel	
Y	41	STREET LIGHTING	LACEBY ROAD	GRIMSBY	525081.83	407707.33	1975		51995	1 Urbis LED	Teceo 48 LED 700mA	104 Watts	12.00 Metres	Galvanised Steel	
Y	42	STREET LIGHTING	LACEBY ROAD	GRIMSBY	525048.32	407694.72	1975		51996	1 Urbis LED	Teceo 48 LED 700mA	104 Watts	12.00 Metres	Galvanised Steel	
Y	43	STREET LIGHTING	LACEBY ROAD	GRIMSBY	525019.23	407682.29	1975		51997	1 Urbis LED	Teceo 48 LED 700mA	104 Watts	12.00 Metres	Galvanised Steel	
Y	44	STREET LIGHTING	LACEBY ROAD	GRIMSBY	524997.37	407672.83	1975		51998	1 Urbis LED	Teceo 48 LED 700mA	104 Watts	12.00 Metres	Galvanised Steel	
Y	45	STREET LIGHTING	LACEBY ROAD	GRIMSBY	524972.06	407661.97	2017	27/09/2017	51999	1 Urbis LED	Teceo 48 LED 700mA	104 Watts	12.00 Metres	Galvanised Steel	
Y	46	STREET LIGHTING	LACEBY ROAD	GRIMSBY	524942.39	407647.78	1975		52000	1 Urbis LED	Teceo 48 LED 700mA	104 Watts	12.00 Metres	Galvanised Steel	
Y	47	STREET LIGHTING	LACEBY ROAD	GRIMSBY	524935.58	407628.82	1975		52001	1 Urbis LED	Teceo 48 LED 700mA	104 Watts	12.00 Metres	Galvanised Steel	
Y	48	STREET LIGHTING	LACEBY ROAD	GRIMSBY					70056	Urbis	Teceo 48 LED 700mA	104 Watts			
Y	49	STREET LIGHTING	LACEBY ROAD	GRIMSBY	524886.24	407598.53	2013		52003	1 Urbis LED	Teceo 48 LED 700mA	104 Watts	12.00 Metres	Galvanised Steel	
Y	50	STREET LIGHTING	LACEBY ROAD	GRIMSBY	524856.23	407585.91	1975		52004	1 Urbis LED	Teceo 48 LED 700mA	104 Watts	12.00 Metres	Galvanised Steel	
Y	51	STREET LIGHTING	LACEBY ROAD	GRIMSBY	524832.34	407580.37			69021						
Y	52	STREET LIGHTING	LACEBY ROAD	GRIMSBY	524802.59	407578.99			69019	Urbis	Teceo 48 LED 700mA	104 Watts			
Y	53	STREET LIGHTING	LACEBY ROAD	GRIMSBY	524758.9	407581.52			69020	Urbis	Teceo 48 LED 700mA	104 Watts			
Y	54	STREET LIGHTING	LACEBY ROAD	GRIMSBY	524732.1	407582.27	2004		52008	1 Urbis LED	Teceo 48 LED 700mA	104 Watts	12.00 Metres	Stainless Steel	
Y	55	STREET LIGHTING	LACEBY ROAD	GRIMSBY	524695.28	407584.11	1975		52009	1 Urbis LED	Teceo 48 LED 700mA	104 Watts	12.00 Metres	Galvanised Steel	
Y	56	STREET LIGHTING	LACEBY ROAD	GRIMSBY	524670.79	407589.91	1975		52010	1 Urbis LED	Teceo 48 LED 700mA	104 Watts	12.00 Metres	Galvanised Steel	
Y	57	STREET LIGHTING	LACEBY ROAD	GRIMSBY	524649.58	407601.19			69038	Urbis	Teceo 48 LED 700mA	104 Watts			
Y	58	STREET LIGHTING	LACEBY ROAD	GRIMSBY	524642.62	407624.98	1975		52012	1 Urbis LED	Teceo 48 LED 700mA	104 Watts	12.00 Metres	Galvanised Steel	
Y	59	STREET LIGHTING	LACEBY ROAD	GRIMSBY	524612.61	407637.22	1975		52013	1 Urbis LED	Teceo 48 LED 700mA	104 Watts	12.00 Metres	Galvanised Steel	
Y	60	STREET LIGHTING	LACEBY ROAD	GRIMSBY	524579.1	407645.97	1975		52014	1 Urbis LED	Teceo 48 LED 700mA	104 Watts	12.00 Metres	Galvanised Steel	
Y	61	STREET LIGHTING	LACEBY ROAD	GRIMSBY	524545.59	407650.02	2007		52015	1 Urbis LED	Teceo 48 LED 700mA	104 Watts	12.00 Metres	Steel	
Y	62	STREET LIGHTING	LACEBY ROAD	GRIMSBY	524513.19	407639.71	1975		52016	1 Urbis LED	Teceo 48 LED 700mA	104 Watts	12.00 Metres	Galvanised Steel	
Y	63	STREET LIGHTING	LACEBY ROAD	GRIMSBY	524480.23	407656.28	1975		52017	1 Urbis LED	Teceo 48 LED 700mA	104 Watts	12.00 Metres	Galvanised Steel	
Y	64	STREET LIGHTING	LACEBY ROAD	GRIMSBY	524445.06	407645.69	1975		52018	1 Urbis LED	Teceo 48 LED 700mA	104 Watts	12.00 Metres	Galvanised Steel	
Y	65	STREET LIGHTING	LACEBY ROAD	GRIMSBY	524414.13	407661.8	1975		52019	1 Urbis LED	Teceo 48 LED 700mA	104 Watts	12.00 Metres	Galvanised Steel	
Y	66	STREET LIGHTING	LACEBY ROAD	GRIMSBY	524382.07	407646.4	1975		52020	1 Urbis LED	Teceo 48 LED 700mA	104 Watts	12.00 Metres	Galvanised Steel	
Y	67	STREET LIGHTING	LACEBY ROAD	GRIMSBY	524380.99	407665.67	1975		52021	1 Urbis LED	Teceo 48 LED 700mA	104 Watts	12.00 Metres	Galvanised Steel	
Y	68	STREET LIGHTING	LACEBY ROAD	GRIMSBY	524311.2	407640.51	1975		61759	1 Urbis LED	Teceo 48 LED 700mA	104 Watts	12.00 Metres	Galvanised Steel	
Y	68	STREET LIGHTING	LACEBY ROAD	GRIMSBY	524311.2	407640.51	1975		62291	1 Urbis LED	Teceo 48 LED 700mA	104 Watts	12.00 Metres	Galvanised Steel	
Y	69	STREET LIGHTING	LACEBY ROAD	GRIMSBY	524265.17	407631.39	1975		61760	1 Urbis LED	Teceo 48 LED 700mA	104 Watts	12.00 Metres	Galvanised Steel	
Y	69	STREET LIGHTING	LACEBY ROAD	GRIMSBY	524265.17	407631.39	1975		62292	1 Urbis LED	Teceo 48 LED 700mA	104 Watts	12.00 Metres	Galvanised Steel	
Y	70	STREET LIGHTING	LACEBY ROAD	GRIMSBY	524213.06	407621.36	1975		61761	1 Urbis LED	Teceo 48 LED 700mA	104 Watts	12.00 Metres	Galvanised Steel	
Y	70	STREET LIGHTING	LACEBY ROAD	GRIMSBY	524213.06	407621.36	1975		62293	1 Urbis LED	Teceo 48 LED 700mA	104 Watts	12.00 Metres	Galvanised Steel	
Y	71	STREET LIGHTING	LACEBY ROAD	GRIMSBY	524159.67	407611.51	1975		61762	1 Urbis LED	Teceo 48 LED 700mA	104 Watts	12.00 Metres	Galvanised Steel	
Y	71	STREET LIGHTING	LACEBY ROAD	GRIMSBY	524159.67	407611.51	1975		62294	1 Urbis LED	Teceo 48 LED 700mA	104 Watts	12.00 Metres	Galvanised Steel	
Y	72	STREET LIGHTING	LACEBY ROAD	GRIMSBY	524107.75	407601.47	1975		61763	1 Urbis LED	Teceo 48 LED 700mA	104 Watts	12.00 Metres	Galvanised Steel	
Y	72	STREET LIGHTING	LACEBY ROAD	GRIMSBY	524107.75	407601.47	1975		62295	1 Urbis LED	Teceo 48 LED 700mA	104 Watts	12.00 Metres	Galvanised Steel	
Y	73	STREET LIGHTING	LACEBY ROAD	GRIMSBY	524059.14	407592.18	1975		61764	1 Urbis LED	Teceo 48 LED 700mA	104 Watts	12.00 Metres	Galvanised Steel	
Y	73	STREET LIGHTING	LACEBY ROAD	GRIMSBY	524059.14	407592.18	1975		62296	1 Urbis LED	Teceo 48 LED 700mA	104 Watts	12.00 Metres	Galvanised Steel	
Y	74	STREET LIGHTING	LACEBY ROAD	GRIMSBY	524027.29	407586.47	1975		61765	1 Urbis LED	Teceo 48 LED 700mA	104 Watts	12.00 Metres	Galvanised Steel	
Y	74	STREET LIGHTING	LACEBY ROAD	GRIMSBY	524027.29	407586.47	1975		62297	1 Urbis LED	Teceo 48 LED 700mA	104 Watts	12.00 Metres	Galvanised Steel	
Y	75	STREET LIGHTING	LACEBY ROAD	GRIMSBY	523980.71	407577.63	1975		61766	1 Urbis LED	Teceo 48 LED 700mA	104 Watts	12.00 Metres	Galvanised Steel	
Y	75	STREET LIGHTING	LACEBY ROAD	GRIMSBY	523980.71	407577.63	1975		62298	1 Urbis LED	Teceo 48 LED 700mA	104 Watts	12.00 Metres	Galvanised Steel	
Y	76	STREET LIGHTING	LACEBY ROAD	GRIMSBY	523926.58	407568.42	1975		61767	1 Urbis LED	Teceo 48 LED 700mA	104 Watts	12.00 Metres	Galvanised Steel	
Y	76	STREET LIGHTING	LACEBY ROAD	GRIMSBY	523926.58	407568.42	1975		62299	1 Urbis LED	Teceo 48 LED 700mA	104 Watts	12.00 Metres	Galvanised Steel	
Y	77	STREET LIGHTING	LACEBY ROAD	GRIMSBY	523904.12	407552.31	1975		52022	1 Urbis LED	Teceo 48 LED 700mA	104 Watts	10.00 Metres	Galvanised Steel	
Y	78	STREET LIGHTING	LACEBY ROAD	GRIMSBY	523877.42	407560.69	1975		61768	1 Urbis LED	Teceo 48 LED 700mA	104 Watts	12.00 Metres	Galvanised Steel	
Y	78	STREET LIGHTING	LACEBY ROAD	GRIMSBY	523877.42	407560.69	1975		62300	1 Urbis LED	Teceo 48 LED 700mA	104 Watts	12.00 Metres	Galvanised Steel	
Y	79	STREET LIGHTING	LACEBY ROAD	GRIMSBY	523866.56	407544.49	1975		52023	1 Urbis LED	Teceo 48 LED 700mA	104 Watts	10.00 Metres	Galvanised Steel	
Y	80	STREET LIGHTING	LACEBY ROAD	GRIMSBY	523861.42	407570.56	1975		52024	1 Urbis LED	Teceo 48 LED 700mA	104 Watts	10.00 Metres	Galvanised Steel	
Y	81	STREET LIGHTING	LACEBY ROAD	GRIMSBY	523845.2	407554.8	1975		61769	1 Urbis LED	Teceo 48 LED 700mA	104 Watts	12.00 Metres	Galvanised Steel	
Y	81	STREET LIGHTING	LACEBY ROAD	GRIMSBY	523845.2	407554.8	1975		62301	1 Urbis LED	Teceo 48 LED 700mA	104 Watts	12.00 Metres	Galvanised Steel	
Y	82	STREET LIGHTING	LACEBY ROAD	GRIMSBY	523827.34	407534.27	1975		52025	1 Urbis LED	Teceo 48 LED 700mA	104 Watts	10.00 Metres	Galvanised Steel	
Y	83	STREET LIGHTING	LACEBY ROAD	GRIMSBY	523820.38	407566.26	1975		52026	1 Urbis LED	Teceo 48 LED 700mA	104 Watts	10.00 Metres	Galvanised Steel	
Y	84	STREET LIGHTING	LACEBY ROAD	GRIMSBY	523808.01	407545.68	1975		61770	Urbis	Teceo 48 LED 700mA	104 Watts	12.00 Metres	Galvanised Steel	

Y	84	STREET LIGHTING	LACEBY ROAD	GRIMSBY	523808.01	407545.68	1975		62302	1 Urbis LED	Teceo 48 LED 700mA	104 Watts	12.00 Metres	Galvanised Steel	
Y	85	STREET LIGHTING	LACEBY ROAD	GRIMSBY	523799.72	407529.11	1975		52027	1 Urbis LED	Teceo 48 LED 700mA	104 Watts	10.00 Metres	Galvanised Steel	
Y	86	STREET LIGHTING	LACEBY ROAD	GRIMSBY	523785.48	407557.15	1975		52028	1 Urbis LED	Teceo 48 LED 700mA	104 Watts	10.00 Metres	Galvanised Steel	
Y	87	STREET LIGHTING	LACEBY ROAD	GRIMSBY	523773.58	407537.03	1995		61771	1 Urbis LED	Teceo 48 LED 700mA	104 Watts	12.00 Metres	Galvanised Steel	
Y	87	STREET LIGHTING	LACEBY ROAD	GRIMSBY	523773.58	407537.03	1995		62303	1 Urbis LED	Teceo 48 LED 700mA	104 Watts	12.00 Metres	Galvanised Steel	
Y	88	STREET LIGHTING	LACEBY ROAD	GRIMSBY	523747.91	407548.3	1975		52029	1 Urbis LED	Teceo 48 LED 700mA	104 Watts	10.00 Metres	Galvanised Steel	
Y	89	STREET LIGHTING	LACEBY ROAD	GRIMSBY	523737.77	407530.39	2003		61772	1 Urbis LED	Teceo 48 LED 700mA	104 Watts	12.00 Metres	Stainless Steel	
Y	89	STREET LIGHTING	LACEBY ROAD	GRIMSBY	523737.77	407530.39	2003		62304	1 Urbis LED	Teceo 48 LED 700mA	104 Watts	12.00 Metres	Stainless Steel	
Y	90	STREET LIGHTING	LACEBY ROAD	GRIMSBY	523695.05	407523.21	1995		61773	1 Urbis LED	Teceo 48 LED 700mA	104 Watts	12.00 Metres	Galvanised Steel	
Y	90	STREET LIGHTING	LACEBY ROAD	GRIMSBY	523695.05	407523.21	1995		62305	1 Urbis LED	Teceo 48 LED 700mA	104 Watts	12.00 Metres	Galvanised Steel	
Y	91	STREET LIGHTING	LACEBY ROAD	GRIMSBY	523658.04	407517.32	1995		61774	1 Urbis LED	Teceo 48 LED 700mA	104 Watts	12.00 Metres	Galvanised Steel	
Y	91	STREET LIGHTING	LACEBY ROAD	GRIMSBY	523658.04	407517.32	1995		62306	1 Urbis LED	Teceo 48 LED 700mA	104 Watts	12.00 Metres	Galvanised Steel	
Y	92	STREET LIGHTING	LACEBY ROAD	GRIMSBY	523608.33	407508.39	1995		61775	1 Urbis LED	Teceo 48 LED 700mA	104 Watts	12.00 Metres	Galvanised Steel	
Y	92	STREET LIGHTING	LACEBY ROAD	GRIMSBY	523608.33	407508.39	1995		62307	1 Urbis LED	Teceo 48 LED 700mA	104 Watts	12.00 Metres	Galvanised Steel	
Y	93	STREET LIGHTING	LACEBY ROAD	GRIMSBY	523557.1	407498.62	1975		61776	1 Urbis LED	Teceo 48 LED 700mA	104 Watts	12.00 Metres	Galvanised Steel	
Y	93	STREET LIGHTING	LACEBY ROAD	GRIMSBY	523557.1	407498.62	1975		62308	1 Urbis LED	Teceo 48 LED 700mA	104 Watts	12.00 Metres	Galvanised Steel	
Y	94	STREET LIGHTING	LACEBY ROAD	GRIMSBY	523517.5	407491.97	1975		61777	1 Urbis LED	Teceo 48 LED 700mA	104 Watts	12.00 Metres	Galvanised Steel	
Y	94	STREET LIGHTING	LACEBY ROAD	GRIMSBY	523517.5	407491.97	1975		62309	1 Urbis LED	Teceo 48 LED 700mA	104 Watts	12.00 Metres	Galvanised Steel	
Y	95	STREET LIGHTING	LACEBY ROAD	GRIMSBY	523463.29	407481.56	2011		61778	1 Urbis LED	Teceo 48 LED 700mA	104 Watts	12.00 Metres	Galvanised Steel	
Y	95	STREET LIGHTING	LACEBY ROAD	GRIMSBY	523463.29	407481.56	2011		62310	1 Urbis LED	Teceo 48 LED 700mA	104 Watts	12.00 Metres	Galvanised Steel	
Y	96	STREET LIGHTING	LACEBY ROAD	GRIMSBY	523414.32	407469.8	1975		61779	1 Urbis LED	Teceo 48 LED 700mA	104 Watts	12.00 Metres	Galvanised Steel	
Y	96	STREET LIGHTING	LACEBY ROAD	GRIMSBY	523414.32	407469.8	1975		62311	1 Urbis LED	Teceo 48 LED 700mA	104 Watts	12.00 Metres	Galvanised Steel	
Y	97	STREET LIGHTING	LACEBY ROAD	GRIMSBY	523383.76	407460.78	1975		61780	1 Urbis LED	Teceo 48 LED 700mA	104 Watts	12.00 Metres	Galvanised Steel	
Y	97	STREET LIGHTING	LACEBY ROAD	GRIMSBY	523383.76	407460.78	1975		62312	1 Urbis LED	Teceo 48 LED 700mA	104 Watts	12.00 Metres	Galvanised Steel	
Y	98	STREET LIGHTING	LACEBY ROAD	GRIMSBY	523349.79	407433.5	1995		52030	1 Urbis LED	Teceo 48 LED 700mA	104 Watts	12.00 Metres	Galvanised Steel	
Y	99	STREET LIGHTING	LACEBY ROAD	GRIMSBY	523341.52	407457.97	1995		52031	1 Urbis LED	Teceo 48 LED 700mA	104 Watts	12.00 Metres	Galvanised Steel	
Y	1	STREET LIGHTING	PEAKS PARKWAY FROM VICTORIA	GRIMSBY	527245.75	409543.81	1998		54898	1 Urbis LED	Teceo 48 LED 700mA	104 Watts	12.00 Metres	Galvanised Steel	
Y	2	STREET LIGHTING	PEAKS PARKWAY FROM VICTORIA	GRIMSBY	527225.9	409531.66	1998		61891	1 Urbis LED	Teceo 48 LED 700mA	104 Watts	12.00 Metres	Galvanised Steel	
Y	2	STREET LIGHTING	PEAKS PARKWAY FROM VICTORIA	GRIMSBY	527225.9	409531.66	1998		62425	1 Urbis LED	Teceo 48 LED 700mA	104 Watts	12.00 Metres	Galvanised Steel	
Y	3	STREET LIGHTING	PEAKS PARKWAY FROM VICTORIA	GRIMSBY	527230.96	409484.27	1998		54899	1 Urbis LED	Teceo 48 LED 700mA	104 Watts	10.00 Metres	Galvanised Steel	
Y	4	STREET LIGHTING	PEAKS PARKWAY FROM VICTORIA	GRIMSBY	527253.04	409491.15	1998		54900	1 Urbis LED	Teceo 48 LED 700mA	104 Watts	10.00 Metres	Galvanised Steel	
Y	5	STREET LIGHTING	PEAKS PARKWAY FROM VICTORIA	GRIMSBY	527263.37	409443.15	1998		54901	1 Urbis LED	Teceo 48 LED 700mA	104 Watts	10.00 Metres	Galvanised Steel	
Y	6	STREET LIGHTING	PEAKS PARKWAY FROM VICTORIA	GRIMSBY	527256.28	409401.53	1998		54902	1 Urbis LED	Teceo 48 LED 700mA	104 Watts	10.00 Metres	Galvanised Steel	
Y	7	STREET LIGHTING	PEAKS PARKWAY FROM VICTORIA	GRIMSBY	527274.91	409364.06	1998		54903	Urbis	Teceo 48 LED 700mA	104 Watts	10.00 Metres	Galvanised Steel	
Y	8	STREET LIGHTING	PEAKS PARKWAY FROM VICTORIA	GRIMSBY	527276.53	409322.95	1998		54904	1 Urbis LED	Teceo 48 LED 700mA	104 Watts	10.00 Metres	Galvanised Steel	
Y	9	STREET LIGHTING	PEAKS PARKWAY FROM VICTORIA	GRIMSBY	527275.31	409275.76	1998		54905	1 Urbis LED	Teceo 48 LED 700mA	104 Watts	10.00 Metres	Galvanised Steel	
Y	10	STREET LIGHTING	PEAKS PARKWAY FROM VICTORIA	GRIMSBY	527258.1	409236.77	1998		54906	1 Urbis LED	Teceo 48 LED 700mA	104 Watts	10.00 Metres	Galvanised Steel	
Y	11	STREET LIGHTING	PEAKS PARKWAY FROM VICTORIA	GRIMSBY	527257.49	409205.28	1998		54907	1 Urbis LED	Teceo 48 LED 700mA	104 Watts	10.00 Metres	Steel	
Y	12	STREET LIGHTING	PEAKS PARKWAY FROM VICTORIA	GRIMSBY	527257.89	409169.93	1998		54908	1 Urbis LED	Teceo 48 LED 700mA	104 Watts	10.00 Metres	Steel	
Y	13	STREET LIGHTING	PEAKS PARKWAY FROM VICTORIA	GRIMSBY	527280.17	409137.63	1998		54909	1 Urbis LED	Teceo 48 LED 700mA	104 Watts	10.00 Metres	Steel	
Y	14	STREET LIGHTING	PEAKS PARKWAY FROM VICTORIA	GRIMSBY	527264.52	409112.28	1998		54910	1 Urbis LED	Teceo 48 LED 700mA	104 Watts	10.00 Metres	Steel	
Y	15	STREET LIGHTING	PEAKS PARKWAY FROM VICTORIA	GRIMSBY	527289.03	409093.75	1998		54911	1 Urbis LED	Teceo 48 LED 700mA	104 Watts	10.00 Metres	Steel	
Y	16	STREET LIGHTING	PEAKS PARKWAY FROM VICTORIA	GRIMSBY	527295.11	409058.2	1998		54912	1 Urbis LED	Teceo 48 LED 700mA	104 Watts	10.00 Metres	Steel	
Y	17	STREET LIGHTING	PEAKS PARKWAY FROM VICTORIA	GRIMSBY	527302.4	409023.67	1998		54913	1 Urbis LED	Teceo 48 LED 700mA	104 Watts	10.00 Metres	Steel	
Y	18	STREET LIGHTING	PEAKS PARKWAY FROM VICTORIA	GRIMSBY	527311.3	408988.77	1998		54914	1 Urbis LED	Teceo 48 LED 700mA	104 Watts	10.00 Metres	Steel	
Y	19	STREET LIGHTING	PEAKS PARKWAY FROM VICTORIA	GRIMSBY	527320.61	408955.05	1998		54915	1 Urbis LED	Teceo 48 LED 700mA	104 Watts	10.00 Metres	Steel	
Y	20	STREET LIGHTING	PEAKS PARKWAY FROM VICTORIA	GRIMSBY	527330.13	408919.5	1998		54916	1 Urbis LED	Teceo 48 LED 700mA	104 Watts	10.00 Metres	Steel	
Y	21	STREET LIGHTING	PEAKS PARKWAY FROM VICTORIA	GRIMSBY	527339.04	408888.82	1998		54917	1 Urbis LED	Teceo 48 LED 700mA	104 Watts	10.00 Metres	Steel	
Y	22	STREET LIGHTING	PEAKS PARKWAY FROM VICTORIA	GRIMSBY	527348.96	408854.9	1998		54918	1 Urbis LED	Teceo 48 LED 700mA	104 Watts	10.00 Metres	Steel	
Y	23	STREET LIGHTING	PEAKS PARKWAY FROM VICTORIA	GRIMSBY	527357.98	408824.62	1998		54919	1 Urbis LED	Teceo 48 LED 700mA	104 Watts	10.00 Metres	Steel	
Y	24	STREET LIGHTING	PEAKS PARKWAY FROM VICTORIA	GRIMSBY	527349.12	408790.89	1998		54920	1 Urbis LED	Teceo 48 LED 700mA	104 Watts	10.00 Metres	Steel	
Y	25	STREET LIGHTING	PEAKS PARKWAY FROM VICTORIA	GRIMSBY	527377.87	408756.36	1998		54921	1 Urbis LED	Teceo 48 LED 700mA	104 Watts	10.00 Metres	Steel	
Y	26	STREET LIGHTING	PEAKS PARKWAY FROM VICTORIA	GRIMSBY	527359.24	408751.3	1998		54922	1 Urbis LED	Teceo 48 LED 700mA	104 Watts	10.00 Metres	Steel	
Y	27	STREET LIGHTING	PEAKS PARKWAY FROM VICTORIA	GRIMSBY	527390.73	408710.51	1998		54923	1 Urbis LED	Teceo 48 LED 700mA	104 Watts	10.00 Metres	Steel	
Y	28	STREET LIGHTING	PEAKS PARKWAY FROM VICTORIA	GRIMSBY	527370.74	408705.7	1998		54924	1 Urbis LED	Teceo 48 LED 700mA	104 Watts	10.00 Metres	Steel	
Y	29	STREET LIGHTING	PEAKS PARKWAY FROM VICTORIA	GRIMSBY	527402.89	408665.07	1998		54925	1 Urbis LED	Teceo 48 LED 700mA	104 Watts	10.00 Metres	Steel	
Y	30	STREET LIGHTING	PEAKS PARKWAY FROM VICTORIA	GRIMSBY	527382.38	408659.25	1998		54926	1 Urbis LED	Teceo 48 LED 700mA	104 Watts	10.00 Metres	Steel	
Y	31	STREET LIGHTING	PEAKS PARKWAY FROM VICTORIA	GRIMSBY	527416.81	408618.74	1998		54927	1 Urbis LED	Teceo 48 LED 700mA	104 Watts	10.00 Metres	Steel	
Y	32	STREET LIGHTING	PEAKS PARKWAY FROM VICTORIA	GRIMSBY	527395.04	408612.41	1998		54928	1 Urbis LED	Teceo 48 LED 700mA	104 Watts	10.00 Metres	Steel	
Y	33	STREET LIGHTING	PEAKS PARKWAY FROM VICTORIA	GRIMSBY	527428.46	408572.03	1998		54929	1 Urbis LED	Teceo 48 LED 700mA	104 Watts	10.00 Metres	Steel	
Y	34	STREET LIGHTING	PEAKS PARKWAY FROM VICTORIA	GRIMSBY	527408.46	408563.67	1998		54930	1 Urbis LED	Teceo 48 LED 700mA	104 Watts	10.00 Metres	Steel	
Y	35	STREET LIGHTING	PEAKS PARKWAY FROM VICTORIA	GRIMSBY	527440.1	408525.95	1998		54931	1 Urbis LED	Teceo 48 LED 700mA	104 Watts	10.00 Metres	Steel	
Y	36	STREET LIGHTING	PEAKS PARKWAY FROM VICTORIA	GRIMSBY	527421.88	408518.61	1998		54932	1 Urbis LED	Teceo 48 LED 700mA	104 Watts	10.00 Metres	Steel	
Y	37	STREET LIGHTING	PEAKS PARKWAY FROM VICTORIA	GRIMSBY	527452	408481.78	1998		54933	1 Urbis LED	Teceo 48 LED 700mA	104 Watts	10.00 Metres	Steel	
Y	38	STREET LIGHTING	PEAKS PARKWAY FROM VICTORIA	GRIMSBY	527436.56	408474.43	1998		54934	1 Urbis LED	Teceo 48 LED 700mA	104 Watts	10.00 Metres	Steel	
Y	39	STREET LIGHTING	PEAKS PARKWAY FROM VICTORIA	GRIMSBY	527463.14	408438.1	1998		54935	1 Urbis LED	Teceo 48 LED 700mA	104 Watts	10.00 Metres	Steel	
Y	40	STREET LIGHTING	PEAKS PARKWAY FROM VICTORIA	GRIMSBY	527470.99	408409.12	1998		54936	1 Urbis LED	Teceo 48 LED 700mA	104 Watts	10.00 Metres	Steel	
Y	41	STREET LIGHTING	PEAKS PARKWAY FROM VICTORIA	GRIMSBY	527480.36	408375.32	1998		54937	1 Urbis LED	Teceo 48 LED 700mA	104 Watts	10.00 Metres	Steel	
Y	42	STREET LIGHTING	PEAKS PARKWAY FROM VICTORIA	GRIMSBY	527490.23	408342.03	1998		54938	1 Urbis LED	Teceo 48 LED 700mA	104 Watts	10.00 Metres	Steel	
Y	43	STREET LIGHTING	PEAKS PARKWAY FROM VICTORIA	GRIMSBY	527500.61	408308.23	1998		54939	1 Urbis LED	Teceo 48 LED 700mA	104 Watts	10.00 Metres	Steel	
Y	44	STREET LIGHTING	PEAKS PARKWAY FROM VICTORIA	GRIMSBY	527513.52	408268.99	1998		54940	1 Urbis LED	Teceo 48 LED 700mA	104 Watts	10.00 Metres	Steel	
Y	45	STREET LIGHTING	PEAKS PARKWAY FROM VICTORIA	GRIMSBY	527495.04	408264.18	1998		54941	1 Urbis LED	Teceo 48 LED 700mA	104 Watts	10.00 Metres	Steel	
Y	46	STREET LIGHTING	PEAKS PARKWAY FROM VICTORIA	GRIMSBY	527527.19	408224.94	1998		54942	1 Urbis LED	Teceo 48 LED 700mA	104 Watts	10.00 Metres	Steel	
Y	47	STREET LIGHTING	PEAKS PARKWAY FROM VICTORIA	GRIMSBY	527506.94	408220.89	1998		54943	1 Urbis LED	Teceo 48 LED 700mA	104 Watts	10.00 Metres	Steel	
Y	48	STREET LIGHTING	PEAKS PARKWAY FROM VICTORIA	GRIMSBY	527541.37	408179.75	1998		54944	1 Urbis LED	Teceo 48 LED 700mA	104 Watts	10.00 Metres	Steel	
Y	49	STREET LIGHTING	PEAKS PARKWAY FROM VICTORIA	GRIMSBY	527518.84	408176.71	1998		54945	1 Urbis LED	Teceo 48 LED 700mA	104 Watts	10.00 Metres	Steel	
Y	50	STREET LIGHTING	PEAKS PARKWAY FROM VICTORIA	GRIMSBY	527555.55	408134.56	1998		54946	1 Urbis LED	Teceo 48 LED 700mA	104 Watts	10.00 Metres	Steel	
Y	51	STREET LIGHTING	PEAKS PARKWAY FROM VICTORIA	GRIMSBY	527530.74	408134.81	1998		54947	1 Urbis LED	Teceo 48 LED 700mA	104 Watts	10.00 Metres	Steel	
Y	52	STREET LIGHTING	PEAKS PARKWAY FROM VICTORIA	GRIMSBY	527568.46	408088.48	1998		54948	1 Urbis LED	Teceo 48 LED 700mA	104 Watts	10.00 Metres	Steel	
Y	53	STREET LIGHTING	PEAKS PARKWAY FROM VICTORIA	GRIMSBY	527545.17	408080.63	1998		54949	1 Urbis LED	Teceo 48 LED 700mA	104 Watts	10.00 Metres	Steel	
Y	54	STREET LIGHTING	PEAKS PARKWAY FROM VICTORIA	GRIMSBY	527581.52	408039.48	1998		54950	1 Urbis LED	Teceo 48 LED 700mA	104 Watts	10.00 Metres	Steel	
Y	55	STREET LIGHTING	PEAKS PARKWAY FROM VICTORIA	GRIMSBY	527558.84	408032.39	1998		54951	1 Urbis LED	Teceo 48 LED 700mA	104 Watts	10.00 Metres	Steel	
Y	56	STREET LIGHTING	PEAKS PARKWAY FROM VICTORIA	GRIMSBY	527592.13	407995.09	1998		54952	1 Urbis LED	Teceo 48 LED 700mA	104 Watts	10.00 Metres	Steel	
Y	57	STREET LIGHTING	PEAKS PARKWAY FROM VICTORIA	GRIMSBY	527570.49	407989.64	1998		54953	1 Urbis LED	Teceo 48 LED 700mA	104 Watts	10.00 Metres	Steel	
Y	58	STREET LIGHTING	PEAKS PARKWAY FROM VICTORIA	GRIMSBY	527602.33	407948.87	1998		54954	1 Urbis LED	Teceo 48 LED 700mA	104 Watts	10.00 Metres	Steel	
Y	59	STREET LIGHTING	PEAKS PARKWAY FROM VICTORIA	GRIMSBY	527584.31	407943.4	1998		54955	1 Urbis LED	Teceo 48 LED 700mA	104 Watts	10.00 Metres	Steel	
Y	60	STREET LIGHTING	PEAKS PARKWAY FROM VICTORIA	GRIMSBY	527610.64	407914.44	1997		54956	1 Urbis LED	Teceo 48 LED 500mA	79 Watts	10.00 Metres	Galvanised Steel	
Y	61	STREET LIGHTING	PEAKS PARKWAY FROM VICTORIA	GRIMSBY	527594.23	407909.18	1997		54957	1 Urbis LED	Teceo 48 LED 700mA	104 Watts	10.00 Metres	Galvanised Steel	
Y	62	STREET LIGHTING	PEAKS PARKWAY FROM VICTORIA	GRIMSBY	527617.32	407889.23	1997		54958	1 Urbis LED	Teceo 48 LED 500mA	79 Watts	10.00 Metres	Galvanised Steel	
Y	63	STREET LIGHTING	PEAKS PARKWAY FROM VICTORIA	GRIMSBY	527624.41	407860.57	1997		54959	1 Urbis LED	Teceo 48 LED 500mA	79 Watts	10.00 Metres	Galvanised Steel	
Y	64	STREET LIGHTING	PEAKS PARKWAY FROM VICTORIA	GRIMSBY	527631.5	407830.29	1997		54960	1 Urbis LED	Teceo 48 LED 500mA	79 Watts	10.00 Metres	Galvanised Steel	
Y	65	STREET LIGHTING	PEAKS PARKWAY FROM VICTORIA	GRIMSBY	527639.6	407801.03	1997		54961	1 Urbis LED	Teceo 48 LED 500mA	79 Watts	10.00 Metres	Galvanised Steel	
Y	66	STREET LIGHTING	PEAKS PARKWAY FROM VICTORIA	GRIMSBY	527647.9	407771.96	1997		54962	1 Urbis LED	Teceo 48 LED 500mA	79 Watts	10.00 Metres	Galvanised Steel	
Y	67	STREET LIGHTING	PEAKS PARKWAY FROM VICTORIA	GRIMSBY	527655.8	407742.5	1997		54963	1 Urbis LED	Teceo 48 LED 500mA	79 Watts	10.00 Metres	Galvanised Steel	
Y	68	STREET LIGHTING	PEAKS PARKWAY FROM VICTORIA	GRIMSBY	527663.7	407713.03	1997		54964	1 Urbis LED	Teceo 48 LED 500mA	79 Watts	10.00 Metres	Galvanised Steel	
Y	69	STREET LIGHTING	PEAKS PARKWAY FROM VICTORIA	GRIMSBY	527671.8	407683.56	1997		54965	1 Urbis LED	Teceo 48 LED 500mA	79 Watts	10.00 Metres	Galvanised Steel	
Y	70	STREET LIGHTING	PEAKS PARKWAY FROM VICTORIA	GRIMSBY	527664.11	407649.44	1997		54966	1 Urbis LED	Teceo 48 LED 500mA	79 Watts	10.00 Metres	Galvanised Steel	
Y	71	STREET LIGHTING	PEAKS PARKWAY FROM VICTORIA	GRIMSBY	527671.81	407619.97	1997		54967	1 Urbis LED	Teceo 48 LED 500mA	79 Watts	10.00 Metres	Galvanised Steel	
Y	72	STREET LIGHTING	PEAKS PARKWAY FROM VICTORIA	GRIMSBY	527681.62	407592.58	2024	06/02/2024	69796	Urbis	Teceo 48 LED 700mA	104 Watts	12.00 Metres	Galvanised Steel	
Y	73	STREET LIGHTING	PEAKS PARKWAY FROM VICTORIA	GRIMSBY	527688.21	407561.84	1997		54969	1 Urbis LED	Teceo 40 LED 500mA	64 Watts	10.00 Metres	Galvanised Steel	
Y	74	STREET LIGHTING	PEAKS PARKWAY FROM VICTORIA	GRIMSBY	527696.52	407532.58	1997		54970	1 Urbis LED	Teceo 48 LED 500mA	79 Watts	10.00 Metres	Galvanised Steel	
Y	75	STREET LIGHTING	PEAKS PARKWAY FROM VICTORIA	GRIMSBY	527704.41	407502.91	1997		54971	1 Urbis LED	Teceo 48 LED 500mA	79 Watts	10.00 Metres	Galvanised Steel	
Y	76	STREET LIGHTING	PEAKS PARKWAY FROM VICTORIA	GRIMSBY	527711.1	407473.44	1997		54972	1 Urbis LED	Teceo 48 LED 500mA	79 Watts	10.00 Metres	Galvanised Steel	
Y	77	STREET LIGHTING	PEAKS PARKWAY FROM VICTORIA	GRIMSBY	527719	407443.57	1997		54973	1 Urbis LED	Teceo 48 LED 700mA	104 Watts	10.00 Metres	Galvanised Steel	
Y	78	STREET LIGHTING	PEAKS PARKWAY FROM VICTORIA	GRIMSBY	527728.11	407414.5	1997		54974	1 Urbis LED	Teceo 48 LED 500mA	79 Watts	10.00 Metres	Galvanised Steel	
Y	79	STREET LIGHTING	PEAKS PARKWAY FROM VICTORIA	GRIMSBY	527737.02	407385.04	1997		54975	1 Urbis LED	Teceo 48 LED 500mA	79 Watts	10.00 Metres	Galvanised Steel	
Y	80	STREET LIGHTING	PEAKS PARKWAY FROM VICTORIA	GRIMSBY	527745.53	407355.77	1997		54976	1 Urbis LED	Teceo 48 LED 500mA	79 Watts	10.00 Metres	Galvanised Steel	
Y	81	STREET LIGHTING	PEAKS PARKWAY FROM VICTORIA	GRIMSBY	527754.24	407326.51	1997		54977	1 Urbis LED	Teceo 48 LED 500mA	79 Watts	10.00 Metres	Galvanised Steel	
Y	82	STREET LIGHTING	PEAKS PARKWAY FROM VICTORIA	GRIMSBY	527762.95	407297.44	1997		54978	1 Urbis LED	Teceo 48 LED 500mA	79 Watts	10.00 Metres	Galvanised Steel	
Y	83	STREET LIGHTING	PEAKS PARKWAY FROM VICTORIA	GRIMSBY	527771.66	407267.77	1997		54979	1 Urbis LED	Teceo 48 LED 500mA	79 Watts	10.00 Metres	Galvanised Steel	

Y	84	STREET LIGHTING	PEAKS PARKWAY FROM VICTORIA	GRIMSBY	527779.76	407238.71	1997		54980	1 Urbis LED	Teceo 48 LED 500mA	79 Watts	10.00 Metres	Galvanised Steel	
Y	85	STREET LIGHTING	PEAKS PARKWAY FROM VICTORIA	GRIMSBY	527788.07	407208.84	1997		54981	1 Urbis LED	Teceo 48 LED 500mA	79 Watts	10.00 Metres	Galvanised Steel	
Y	86	STREET LIGHTING	PEAKS PARKWAY FROM VICTORIA	GRIMSBY	527796.17	407179.37	1997		54982	1 Urbis LED	Teceo 48 LED 500mA	79 Watts	10.00 Metres	Galvanised Steel	
Y	87	STREET LIGHTING	PEAKS PARKWAY FROM VICTORIA	GRIMSBY	527803.86	407149.5	1997		54983	1 Urbis LED	Teceo 48 LED 500mA	79 Watts	10.00 Metres	Galvanised Steel	
Y	88	STREET LIGHTING	PEAKS PARKWAY FROM VICTORIA	GRIMSBY	527811.97	407120.44	2009		54984	1 Urbis LED	Teceo 48 LED 500mA	79 Watts	10.00 Metres	Steel	
Y	89	STREET LIGHTING	PEAKS PARKWAY FROM VICTORIA	GRIMSBY	527819.66	407090.97	2002		54985	1 Urbis LED	Teceo 48 LED 500mA	79 Watts	10.00 Metres	Stainless Steel	
Y	90	STREET LIGHTING	PEAKS PARKWAY FROM VICTORIA	GRIMSBY	527827.97	407061.3	1997		54986	1 Urbis LED	Teceo 48 LED 500mA	79 Watts	10.00 Metres	Galvanised Steel	
Y	91	STREET LIGHTING	PEAKS PARKWAY FROM VICTORIA	GRIMSBY	527835.66	407032.44	1997		54987	1 Urbis LED	Teceo 48 LED 500mA	79 Watts	10.00 Metres	Galvanised Steel	
Y	1	STREET LIGHTING	AINSLIE PARK FOOTPATH	GRIMSBY	527060.66	408988.34	1998		42763	Urbis	Axia 8 LED 350mA	10 Watts	6.00 Metres	Steel	
Y	2	STREET LIGHTING	AINSLIE PARK FOOTPATH	GRIMSBY	527084.35	408984.9	1998		42764	Urbis	Axia 8 LED 350mA	10 Watts	6.00 Metres	Steel	
Y	3	STREET LIGHTING	AINSLIE PARK FOOTPATH	GRIMSBY	527110.89	408977.81	1998		42765	Urbis	Axia 8 LED 350mA	10 Watts	6.00 Metres	Steel	
Y	4	STREET LIGHTING	AINSLIE PARK FOOTPATH	GRIMSBY	527138.43	408984.39	1998		42766	Urbis	Axia 8 LED 350mA	10 Watts	6.00 Metres	Steel	
Y	5	STREET LIGHTING	AINSLIE PARK FOOTPATH	GRIMSBY	527163.55	408978.42	1998		42767	Urbis	Axia 8 LED 350mA	10 Watts	6.00 Metres	Steel	
Y	6	STREET LIGHTING	AINSLIE PARK FOOTPATH	GRIMSBY	527185.42	408962.42	1998		42768	Urbis	Axia 8 LED 350mA	10 Watts	6.00 Metres	Steel	
Y	7	STREET LIGHTING	AINSLIE PARK FOOTPATH	GRIMSBY	527213.98	408957.45	1998		42769	Urbis	Axia 8 LED 350mA	10 Watts	6.00 Metres	Steel	
Y	8	STREET LIGHTING	AINSLIE PARK FOOTPATH	GRIMSBY	527231.19	408944.8	2021	08/06/2021	42770	Urbis	Axia 8 LED 350mA	10 Watts	6.00 Metres	Galvanised Steel	
Y	9	STREET LIGHTING	AINSLIE PARK FOOTPATH	GRIMSBY	527244.96	408918.87			42771	Urbis	Axia 8 LED 350mA	10 Watts	6.00 Metres	Steel	
Y	10	STREET LIGHTING	AINSLIE PARK FOOTPATH	GRIMSBY	527268.05	408910.06	1998		42772	Urbis	Axia 8 LED 350mA	10 Watts	6.00 Metres	Steel	
Y	11	STREET LIGHTING	AINSLIE PARK FOOTPATH	GRIMSBY	527295.39	408906.82	1998		42773	Urbis	Axia 8 LED 350mA	10 Watts	6.00 Metres	Steel	
Y	12	STREET LIGHTING	AINSLIE PARK FOOTPATH	GRIMSBY	527306.53	408885.46	1998		42774	1 Urbis LED	Axia 16 LED 500mA	28 Watts	6.00 Metres	Steel	
Y	1	STREET LIGHTING	BARCROFT STREET	CLEETHORPES	529193.17	410132.67	2007		43596	1 Urbis LED	Axia 16 LED 500mA	28 Watts	6.00 Metres	Steel	
Y	2	STREET LIGHTING	BARCROFT STREET	CLEETHORPES	529168.54	410107.92	2007		43597	1 Urbis LED	Axia 16 LED 500mA	28 Watts	6.00 Metres	Steel	
Y	3	STREET LIGHTING	BARCROFT STREET	CLEETHORPES	529163.96	410074.02	2007		43598	1 Urbis LED	Axia 16 LED 500mA	28 Watts	6.00 Metres	Steel	
Y	4	STREET LIGHTING	BARCROFT STREET	CLEETHORPES	529139.83	410049.51	2007		43599	1 Urbis LED	Axia 16 LED 500mA	28 Watts	6.00 Metres	Steel	
Y	5	STREET LIGHTING	BARCROFT STREET	CLEETHORPES	529135.62	410016.48	2007		43600	1 Urbis LED	Axia 16 LED 500mA	28 Watts	6.00 Metres	Steel	
Y	6	STREET LIGHTING	BARCROFT STREET	CLEETHORPES	529121.96	409989.34	2007		43601	1 Urbis LED	Axia 16 LED 500mA	28 Watts	6.00 Metres	Steel	
Y	7	STREET LIGHTING	BARCROFT STREET	CLEETHORPES	529099.7	409968.39	2007		43602	1 Urbis LED	Axia 16 LED 500mA	28 Watts	6.00 Metres	Steel	
Y	8	STREET LIGHTING	BARCROFT STREET	CLEETHORPES	529086.34	409916.83	2007		43603	1 Urbis LED	Axia 16 LED 500mA	28 Watts	6.00 Metres	Steel	
Y	9	STREET LIGHTING	BARCROFT STREET	CLEETHORPES	529072.9	409889.5	2007		43604	1 Urbis LED	Axia 16 LED 500mA	28 Watts	6.00 Metres	Steel	
Y	10	STREET LIGHTING	BARCROFT STREET	CLEETHORPES	529048.88	409866.11	2007		43605	1 Urbis LED	Axia 16 LED 500mA	28 Watts	6.00 Metres	Steel	
Y	11	STREET LIGHTING	BARCROFT STREET	CLEETHORPES	529045.01	409833.3	2007		43606	1 Urbis LED	Axia 16 LED 500mA	28 Watts	6.00 Metres	Steel	
Y	12	STREET LIGHTING	BARCROFT STREET	CLEETHORPES	529020.39	409808.38	2007		43607	1 Urbis LED	Axia 16 LED 500mA	28 Watts	6.00 Metres	Steel	
Y	13	STREET LIGHTING	BARCROFT STREET	CLEETHORPES	529016.15	409775.09	2007		43608	1 Urbis LED	Axia 16 LED 500mA	28 Watts	6.00 Metres	Steel	
Y	14	STREET LIGHTING	BARCROFT STREET	CLEETHORPES	528992.13	409751.4	2007		43609	1 Urbis LED	Axia 16 LED 500mA	28 Watts	6.00 Metres	Steel	
Y	15	STREET LIGHTING	BARCROFT STREET	CLEETHORPES	528983.87	409710.07	2007		43610	1 Urbis LED	Axia 16 LED 500mA	28 Watts	6.00 Metres	Steel	
Y	16	STREET LIGHTING	BARCROFT STREET	CLEETHORPES	528960.3	409686.54	2007		43611	1 Urbis LED	Axia 16 LED 500mA	28 Watts	6.00 Metres	Steel	
Y	17	STREET LIGHTING	BARCROFT STREET	CLEETHORPES	528956.99	409655.08	2007		43612	1 Urbis LED	Axia 16 LED 500mA	28 Watts	6.00 Metres	Steel	
Y	18	STREET LIGHTING	BARCROFT STREET	CLEETHORPES	528933.46	409632.14	2007		43613	1 Urbis LED	Axia 16 LED 500mA	28 Watts	6.00 Metres	Steel	
Y	19	STREET LIGHTING	BARCROFT STREET	CLEETHORPES	528919.83	409604.19	2007		43614	1 Urbis LED	Axia 16 LED 500mA	28 Watts	6.00 Metres	Steel	
Y	20	STREET LIGHTING	BARCROFT STREET	CLEETHORPES	528916.63	409572.58	2007		43615	1 Urbis LED	Axia 16 LED 500mA	28 Watts	6.00 Metres	Steel	
Y	21	STREET LIGHTING	BARCROFT STREET	CLEETHORPES	528893.25	409549.9	2007		43616	1 Urbis LED	Axia 16 LED 500mA	28 Watts	6.00 Metres	Steel	
Y	22	STREET LIGHTING	BARCROFT STREET	CLEETHORPES	528888.63	409515.78	2007		43617	1 Urbis LED	Axia 16 LED 500mA	28 Watts	6.00 Metres	Steel	
Y	23	STREET LIGHTING	BARCROFT STREET	CLEETHORPES	528868.14	409499.79	2007		43618	1 Urbis LED	Axia 16 LED 500mA	28 Watts	6.00 Metres	Steel	
Y	24	STREET LIGHTING	BARCROFT STREET	CLEETHORPES	528847.27	409479.07	2007		43619	1 Urbis LED	Axia 16 LED 500mA	28 Watts	6.00 Metres	Steel	
Y	25	STREET LIGHTING	BARCROFT STREET	CLEETHORPES	528870.77	409468.71	2007		43620	1 Urbis LED	Axia 16 LED 500mA	28 Watts	6.00 Metres	Steel	
Y	1	STREET LIGHTING	BARNETT PLACE	CLEETHORPES	528992.81	409360.08	1993		43713	Urbis	Axia 16 LED 350mA	19 Watts	5.00 Metres	Galvanised Steel	
Y	2	STREET LIGHTING	BARNETT PLACE	CLEETHORPES	528982.94	409334.07	1993		43714	Urbis	Axia 16 LED 350mA	19 Watts	5.00 Metres	Galvanised Steel	
Y	3	STREET LIGHTING	BARNETT PLACE	CLEETHORPES	528982.43	409306.67	1993		43715	Urbis	Axia 16 LED 350mA	19 Watts	5.00 Metres	Galvanised Steel	
Y	4	STREET LIGHTING	BARNETT PLACE	CLEETHORPES	528985.98	409275.53	1993		43716	Urbis	Axia 16 LED 350mA	19 Watts	5.00 Metres	Galvanised Steel	
Y	5	STREET LIGHTING	BARNETT PLACE	CLEETHORPES	529005.73	409259.77	2003		43717	Urbis	Axia 16 LED 350mA	19 Watts	5.00 Metres	Stainless Steel	
Y	6	STREET LIGHTING	BARNETT PLACE	CLEETHORPES	529020.54	409248.83	1995		43718	Urbis	Axia 16 LED 350mA	19 Watts	5.00 Metres	Galvanised Steel	
Y	7	STREET LIGHTING	BARNETT PLACE	CLEETHORPES	529025.6	409221.81	1995		43719	Urbis	Axia 16 LED 350mA	19 Watts	5.00 Metres	Galvanised Steel	
Y	8	STREET LIGHTING	BARNETT PLACE	CLEETHORPES	529031.8	409201.37	1995		43720	Urbis	Axia 16 LED 350mA	19 Watts	5.00 Metres	Galvanised Steel	
Y	9	STREET LIGHTING	BARNETT PLACE	CLEETHORPES	529034.33	409255.15	1993		43721	Urbis	Axia 16 LED 350mA	19 Watts	5.00 Metres	Galvanised Steel	
Y	10	STREET LIGHTING	BARNETT PLACE	CLEETHORPES	529054.33	409265.09	1993		43722	Urbis	Axia 16 LED 350mA	19 Watts	5.00 Metres	Galvanised Steel	
Y	11	STREET LIGHTING	BARNETT PLACE	CLEETHORPES	529061.68	409277.31	1995		43723	Urbis	Axia 16 LED 350mA	19 Watts	5.00 Metres	Galvanised Steel	
Y	12	STREET LIGHTING	BARNETT PLACE	CLEETHORPES	529058.64	409301.93	1995		43724	Urbis	Axia 16 LED 350mA	19 Watts	5.00 Metres	Galvanised Steel	
Y	13	STREET LIGHTING	BARNETT PLACE	CLEETHORPES	529082.05	409256.42	1993		43725	Urbis	Axia 16 LED 350mA	19 Watts	5.00 Metres	Galvanised Steel	
Y	14	STREET LIGHTING	BARNETT PLACE	CLEETHORPES	529079.78	409233.7	1993		43726	Urbis	Axia 16 LED 350mA	19 Watts	5.00 Metres	Galvanised Steel	
Y	15	STREET LIGHTING	BARNETT PLACE	CLEETHORPES	529054.21	409240.85	1993		43727	Urbis	Axia 16 LED 350mA	19 Watts	5.00 Metres	Galvanised Steel	
Y	1	STREET LIGHTING	BLUNDELL AVENUE	CLEETHORPES	529398.59	410061.35	2012		44277	1 Urbis LED	Axia 16 LED 500mA	28 Watts	6.00 Metres	Steel	
Y	2	STREET LIGHTING	BLUNDELL AVENUE	CLEETHORPES	529372.59	410035.07	2012		44278	1 Urbis LED	Axia 16 LED 500mA	28 Watts	6.00 Metres	Steel	
Y	3	STREET LIGHTING	BLUNDELL AVENUE	CLEETHORPES	529367.46	409998.63	2012		44279	1 Urbis LED	Axia 16 LED 500mA	28 Watts	6.00 Metres	Steel	
Y	4	STREET LIGHTING	BLUNDELL AVENUE	CLEETHORPES	529353.83	409971.21	2012		44280	1 Urbis LED	Axia 16 LED 500mA	28 Watts	6.00 Metres	Steel	
Y	5	STREET LIGHTING	BLUNDELL AVENUE	CLEETHORPES	529327.74	409945.02	2012		44281	1 Urbis LED	Axia 16 LED 500mA	28 Watts	6.00 Metres	Steel	
Y	6	STREET LIGHTING	BLUNDELL AVENUE	CLEETHORPES	529317.25	409923.77	2012		44282	1 Urbis LED	Axia 16 LED 500mA	28 Watts	6.00 Metres	Steel	
Y	7	STREET LIGHTING	BLUNDELL AVENUE	CLEETHORPES	529302.08	409892.92	2012		44283	1 Urbis LED	Axia 16 LED 500mA	28 Watts	6.00 Metres	Steel	
Y	8	STREET LIGHTING	BLUNDELL AVENUE	CLEETHORPES	529290.04	409868.65	2012		44284	1 Urbis LED	Axia 16 LED 500mA	28 Watts	6.00 Metres	Steel	
Y	9	STREET LIGHTING	BLUNDELL AVENUE	CLEETHORPES	529279.35	409820.03	2012		44285	1 Urbis LED	Axia 16 LED 500mA	28 Watts	6.00 Metres	Steel	
Y	10	STREET LIGHTING	BLUNDELL AVENUE	CLEETHORPES	529251.66	409791.28	2012		44286	1 Urbis LED	Axia 16 LED 500mA	28 Watts	6.00 Metres	Steel	
Y	11	STREET LIGHTING	BLUNDELL AVENUE	CLEETHORPES	529247.33	409755.01	2012		44287	1 Urbis LED	Axia 16 LED 500mA	28 Watts	6.00 Metres	Steel	
Y	12	STREET LIGHTING	BLUNDELL AVENUE	CLEETHORPES	529221.09	409728.63	2012		44288	1 Urbis LED	Axia 16 LED 500mA	28 Watts	6.00 Metres	Steel	
Y	13	STREET LIGHTING	BLUNDELL AVENUE	CLEETHORPES	529216.28	409692.12	2012		44289	1 Urbis LED	Axia 16 LED 500mA	28 Watts	6.00 Metres	Steel	
Y	14	STREET LIGHTING	BLUNDELL AVENUE	CLEETHORPES	529191.86	409669.91	2012		44290	1 Urbis LED	Axia 16 LED 500mA	28 Watts	6.00 Metres	Steel	
Y	15	STREET LIGHTING	BLUNDELL AVENUE	CLEETHORPES	529181.25	409648.68	2012		44291	1 Urbis LED	Axia 16 LED 500mA	28 Watts	6.00 Metres	Steel	
Y	1	STREET LIGHTING	BRAMHALL STREET	CLEETHORPES	529604.3	409665.1	2008		44555	1 Urbis LED	Axia 16 LED 500mA	28 Watts	6.00 Metres	Steel	
Y	2	STREET LIGHTING	BRAMHALL STREET	CLEETHORPES	529581.03	409642.83	2008		44556	1 Urbis LED	Axia 16 LED 500mA	28 Watts	6.00 Metres	Steel	
Y	3	STREET LIGHTING	BRAMHALL STREET	CLEETHORPES	529566.82	409613.35	2008		44557	1 Urbis LED	Axia 16 LED 500mA	28 Watts	6.00 Metres	Galvanised Steel	
Y	4	STREET LIGHTING	BRAMHALL STREET	CLEETHORPES	529558.21	409575.31	2015	30/07/2015	44558	1 Urbis LED	Axia 16 LED 500mA	28 Watts	6.00 Metres	Galvanised Steel	
Y	5	STREET LIGHTING	BRAMHALL STREET	CLEETHORPES	529534.03	409544.43	2014	15/10/2014	44559	1 Urbis LED	Teceo 32 LED 500mA	28 Watts	6.00 Metres	Galvanised Steel	
Y	6	STREET LIGHTING	BRAMHALL STREET	CLEETHORPES	529523.65	409505.19	2015	30/07/2015	44560	1 Urbis LED	Axia 16 LED 500mA	28 Watts	6.00 Metres	Galvanised Steel	
Y	7	STREET LIGHTING	BRAMHALL STREET	CLEETHORPES	529501.88	409457.91	1998		44561	1 Urbis LED	Axia 16 LED 500mA	28 Watts	6.00 Metres	Galvanised Steel	
Y	8	STREET LIGHTING	BRAMHALL STREET	CLEETHORPES	529485.8	409449.55	1998		44562	1 Urbis LED	Axia 16 LED 500mA	28 Watts	6.00 Metres	Galvanised Steel	
Y	9	STREET LIGHTING	BRAMHALL STREET	CLEETHORPES	529466.44	409431.07	1998		44563	1 Urbis LED	Axia 16 LED 500mA	28 Watts	6.00 Metres	Galvanised Steel	
Y	10	STREET LIGHTING	BRAMHALL STREET	CLEETHORPES	529488.71	409421.9	1998		44564	1 Urbis LED	Axia 16 LED 500mA	28 Watts	6.00 Metres	Galvanised Steel	
Y	1	STREET LIGHTING	BRERETON AVENUE	CLEETHORPES	528706.46	409871.99	1989		44592	1 Urbis LED	Teceo 40 LED 500mA	64 Watts	8.00 Metres	Galvanised Steel	
Y	2	STREET LIGHTING	BRERETON AVENUE	CLEETHORPES	528737.6	409844.46	1989		44593	1 Urbis LED	Teceo 40 LED 500mA	64 Watts	8.00 Metres	Galvanised Steel	
Y	3	STREET LIGHTING	BRERETON AVENUE	CLEETHORPES	528774.18	409839.47	1989		44594	1 Urbis LED	Teceo 40 LED 500mA	64 Watts	8.00 Metres	Galvanised Steel	
Y	4	STREET LIGHTING	BRERETON AVENUE	CLEETHORPES	528791.78	409817.89	1989		44595	1 Urbis LED	Teceo 40 LED 500mA	64 Watts	8.00 Metres	Galvanised Steel	
Y	5	STREET LIGHTING	BRERETON AVENUE	CLEETHORPES	528824.81	409814.66	1989		44596	1 Urbis LED	Teceo 40 LED 500mA	64 Watts	8.00 Metres	Galvanised Steel	
Y	6	STREET LIGHTING	BRERETON AVENUE	CLEETHORPES	528846.21	409791.43	1989		44597	1 Urbis LED	Teceo 40 LED 500mA	64 Watts	8.00 Metres	Galvanised Steel	
Y	7	STREET LIGHTING	BRERETON AVENUE	CLEETHORPES	528874.69	409790.36	1989		44598	1 Urbis LED	Teceo 40 LED 500mA	64 Watts	8.00 Metres	Galvanised Steel	
Y	8	STREET LIGHTING	BRERETON AVENUE	CLEETHORPES	528899.62	409765.61	1989		44599	1 Urbis LED	Teceo 40 LED 500mA	64 Watts	8.00 Metres	Galvanised Steel	
Y	9	STREET LIGHTING	BRERETON AVENUE	CLEETHORPES	528932.91	409762.26	1989		44600	1 Urbis LED	Teceo 40 LED 500mA	64 Watts	8.00 Metres	Galvanised Steel	
Y	10	STREET LIGHTING	BRERETON AVENUE	CLEETHORPES	528952.66	409739.92	1989		44601	1 Urbis LED	Teceo 40 LED 500mA	64 Watts	8.00 Metres	Galvanised Steel	
Y	11	STREET LIGHTING	BRERETON AVENUE	CLEETHORPES	528981.9	409737.57	1989		44602	1 Urbis LED	Teceo 40 LED 500mA	64 Watts	8.00 Metres	Galvanised Steel	
Y	12	STREET LIGHTING	BRERETON AVENUE	CLEETHORPES	528999.73	409717.01	1989		44603	1 Urbis LED	Teceo 40 LED 500mA	64 Watts	8.00 Metres	Galvanised Steel	
Y	13	STREET LIGHTING	BRERETON AVENUE	CLEETHORPES	529034.49	409712	1989		44604	1 Urbis LED	Teceo 40 LED 500mA	64 Watts	8.00 Metres	Galvanised Steel	
Y	14	STREET LIGHTING	BRERETON AVENUE	CLEETHORPES	529056.13	409689.15	1989		44605	1 Urbis LED	Teceo 40 LED 500mA	64 Watts	8.00 Metres	Galvanised Steel	
Y	15	STREET LIGHTING	BRERETON AVENUE	CLEETHORPES	529086.51	409686.68	1989		44606	1 Urbis LED	Teceo 40 LED 500mA	64 Watts	8.00 Metres	Galvanised Steel	
Y	16	STREET LIGHTING	BRERETON AVENUE	CLEETHORPES	529108.29	409663.2	2017		44607	1 Urbis LED	Teceo 40 LED 500mA	64 Watts	8.00 Metres	Galvanised Steel	
Y	17	STREET LIGHTING	BRERETON AVENUE	CLEETHORPES	529132.97	409651.62	2017		44608	1 Urbis LED	Teceo 40 LED 500mA	64 Watts	8.00 Metres	Galvanised Steel	
Y	18	STREET LIGHTING	BRERETON AVENUE	CLEETHORPES	529163.98	409649.03	1989		44609	1 Urbis LED	Teceo 40 LED 500mA	64 Watts	8.00 Metres	Galvanised Steel	
Y	19	STREET LIGHTING	BRERETON AVENUE	CLEETHORPES	529184.23	409626.06	1989		44610	1 Urbis LED	Teceo 40 LED 500mA	64 Watts	8.00 Metres	Galvanised Steel	
Y	20	STREET LIGHTING	BRERETON AVENUE	CLEETHORPES	529216.64	409622.77	1989		44611	Urbis	Ampera 48 LED 700mA	104 Watts	8.00 Metres	Galvanised Steel	
Y	21	STREET LIGHTING	BRERETON AVENUE	CLEETHORPES	529238.28	409599.16	2017		44612	1 Urbis LED	Teceo 40 LED 500mA	64 Watts	8.00 Metres	Galvanised Steel	
Y	22	STREET LIGHTING	BRERETON AVENUE	CLEETHORPES	529267.65	409598.21	1989		44613	1 Urbis LED	Teceo 40 LED 500mA	64 Watts	8.00 Metres	Galvanised Steel	
Y	23	STREET LIGHTING	BRERETON AVENUE	CLEETHORPES	529282.46	409578.02	2017		44614	1 Urbis LED	Teceo 40 LED 500mA	64 Watts	8.00 Metres	Galvanised Steel	
Y	24	STREET LIGHTING	BRERETON AVENUE	CLEETHORPES	529318.91	409572.77	2017		44615	1 Urbis LED	Teceo 40 LED 500mA	64 Watts	8.00 Metres	Galvanised Steel	
Y	25	STREET LIGHTING	BRERETON AVENUE	CLEETHORPES	529336.13	409551.44	1989		44616	1 Urbis LED	Teceo 40 LED 500mA	64 Watts	8.00 Metres	Galvanised Steel	

Y	26	STREET LIGHTING	BRERETON AVENUE	CLEETHORPES	529367.39	409548.78	2017		44617	1 Urbis LED	Teceo 40 LED 500mA	64 Watts	8.00 Metres	Galvanised Steel	
Y	27	STREET LIGHTING	BRERETON AVENUE	CLEETHORPES	529394.36	409522.58	1989		44618	1 Urbis LED	Teceo 40 LED 500mA	64 Watts	8.00 Metres	Galvanised Steel	
Y	28	STREET LIGHTING	BRERETON AVENUE	CLEETHORPES	529425.87	409520.62	1989		44619	1 Urbis LED	Teceo 40 LED 500mA	64 Watts	8.00 Metres	Galvanised Steel	
Y	29	STREET LIGHTING	BRERETON AVENUE	CLEETHORPES	529447.01	409496.51	1989		44620	1 Urbis LED	Teceo 40 LED 500mA	64 Watts	8.00 Metres	Galvanised Steel	
Y	30	STREET LIGHTING	BRERETON AVENUE	CLEETHORPES	529470.05	409498.41	1989		44621	1 Urbis LED	Teceo 40 LED 500mA	64 Watts	8.00 Metres	Galvanised Steel	
Y	31	STREET LIGHTING	BRERETON AVENUE	CLEETHORPES	529485.24	409477.71	1989		44622	1 Urbis LED	Teceo 40 LED 500mA	64 Watts	8.00 Metres	Galvanised Steel	
Y	32	STREET LIGHTING	BRERETON AVENUE	CLEETHORPES	529521.57	409473.09	1989		44623	1 Urbis LED	Teceo 40 LED 500mA	64 Watts	8.00 Metres	Galvanised Steel	
Y	33	STREET LIGHTING	BRERETON AVENUE	CLEETHORPES	529530.81	409442.52	1989		44624	1 Urbis LED	Teceo 40 LED 500mA	64 Watts	8.00 Metres	Galvanised Steel	
Y	34	STREET LIGHTING	BRERETON AVENUE	CLEETHORPES	529557.77	409427.65	1989		44625	1 Urbis LED	Teceo 40 LED 500mA	64 Watts	8.00 Metres	Galvanised Steel	
Y	35	STREET LIGHTING	BRERETON AVENUE	CLEETHORPES	529564.86	409398.22	1989		44626	1 Urbis LED	Teceo 40 LED 500mA	64 Watts	8.00 Metres	Galvanised Steel	
Y	36	STREET LIGHTING	BRERETON AVENUE	CLEETHORPES	529593.34	409381.96	1989		44627	1 Urbis LED	Teceo 40 LED 500mA	64 Watts	8.00 Metres	Galvanised Steel	
Y	37	STREET LIGHTING	BRERETON AVENUE	CLEETHORPES	529602.71	409351.26	1989		44628	1 Urbis LED	Teceo 40 LED 500mA	64 Watts	8.00 Metres	Galvanised Steel	
Y	38	STREET LIGHTING	BRERETON AVENUE	CLEETHORPES	529628.91	409337.78	1989		44629	1 Urbis LED	Teceo 40 LED 500mA	64 Watts	8.00 Metres	Galvanised Steel	
Y	39	STREET LIGHTING	BRERETON AVENUE	CLEETHORPES	529634.1	409312.15	1989		44630	1 Urbis LED	Teceo 40 LED 500mA	64 Watts	8.00 Metres	Galvanised Steel	
Y	40	STREET LIGHTING	BRERETON AVENUE	CLEETHORPES	529664.61	409293.86	1989		44631	1 Urbis LED	Teceo 40 LED 500mA	64 Watts	8.00 Metres	Galvanised Steel	
Y	41	STREET LIGHTING	BRERETON AVENUE	CLEETHORPES	529670.43	409266.65	1989		44632	1 Urbis LED	Teceo 40 LED 500mA	64 Watts	8.00 Metres	Galvanised Steel	
Y	42	STREET LIGHTING	BRERETON AVENUE	CLEETHORPES	529696.5	409253.23	1989		44633	1 Urbis LED	Teceo 40 LED 500mA	64 Watts	8.00 Metres	Galvanised Steel	
Y	43	STREET LIGHTING	BRERETON AVENUE	CLEETHORPES	529706.44	409221.36	1989		44634	1 Urbis LED	Teceo 40 LED 500mA	64 Watts	8.00 Metres	Galvanised Steel	
Y	44	STREET LIGHTING	BRERETON AVENUE	CLEETHORPES	529735.55	409204.21	1989		44635	1 Urbis LED	Teceo 40 LED 500mA	64 Watts	8.00 Metres	Galvanised Steel	
Y	45	STREET LIGHTING	BRERETON AVENUE	CLEETHORPES	529745.42	409172.88	1989		44636	1 Urbis LED	Teceo 40 LED 500mA	64 Watts	8.00 Metres	Galvanised Steel	
Y	46	STREET LIGHTING	BRERETON AVENUE	CLEETHORPES	529772.89	409159.91	1989		44637	1 Urbis LED	Teceo 40 LED 500mA	64 Watts	8.00 Metres	Galvanised Steel	
Y	47	STREET LIGHTING	BRERETON AVENUE	CLEETHORPES	529780.36	409129.21	2017		44638	1 Urbis LED	Teceo 40 LED 500mA	64 Watts	8.00 Metres	Galvanised Steel	
Y	48	STREET LIGHTING	BRERETON AVENUE	CLEETHORPES	529808.46	409112.95	1989		44639	1 Urbis LED	Teceo 40 LED 500mA	64 Watts	8.00 Metres	Galvanised Steel	
Y	49	STREET LIGHTING	BRERETON AVENUE	CLEETHORPES	529814.41	409086.18	1989		44640	1 Urbis LED	Teceo 40 LED 500mA	64 Watts	8.00 Metres	Galvanised Steel	
Y	50	STREET LIGHTING	BRERETON AVENUE	CLEETHORPES	529844.79	409069.28	1989		44641	1 Urbis LED	Teceo 40 LED 500mA	64 Watts	8.00 Metres	Galvanised Steel	
Y	51	STREET LIGHTING	BRERETON AVENUE	CLEETHORPES	529852.26	409038.97	1989		44642	1 Urbis LED	Teceo 40 LED 500mA	64 Watts	8.00 Metres	Galvanised Steel	
Y	52	STREET LIGHTING	BRERETON AVENUE	CLEETHORPES	529873.4	409031.31	2017		44643	1 Urbis LED	Teceo 40 LED 500mA	64 Watts	8.00 Metres	Galvanised Steel	
Y	53	STREET LIGHTING	BRERETON AVENUE	CLEETHORPES	529883.68	408999.61	1989		44644	1 Urbis LED	Teceo 40 LED 500mA	64 Watts	8.00 Metres	Galvanised Steel	
Y	54	STREET LIGHTING	BRERETON AVENUE	CLEETHORPES	529910.91	408984.09	1989		44645	1 Urbis LED	Teceo 40 LED 500mA	64 Watts	8.00 Metres	Galvanised Steel	
Y	55	STREET LIGHTING	BRERETON AVENUE	CLEETHORPES	529918.48	408955.52	1989		44646	1 Urbis LED	Teceo 40 LED 500mA	64 Watts	8.00 Metres	Galvanised Steel	
Y	56	STREET LIGHTING	BRERETON AVENUE	CLEETHORPES	529944.81	408941.24	1989		44647	1 Urbis LED	Teceo 40 LED 500mA	64 Watts	8.00 Metres	Galvanised Steel	
Y	57	STREET LIGHTING	BRERETON AVENUE	CLEETHORPES	529960	408903.87	1989		44648	1 Urbis LED	Teceo 40 LED 500mA	64 Watts	8.00 Metres	Galvanised Steel	
Y	58	STREET LIGHTING	BRERETON AVENUE	CLEETHORPES	529987.74	408888.38	1989		44649	1 Urbis LED	Teceo 40 LED 500mA	64 Watts	8.00 Metres	Galvanised Steel	
Y	59	STREET LIGHTING	BRERETON AVENUE	CLEETHORPES	529998.93	408854.95	1989		44650	1 Urbis LED	Teceo 40 LED 500mA	64 Watts	8.00 Metres	Galvanised Steel	
Y	60	STREET LIGHTING	BRERETON AVENUE	CLEETHORPES	530027.03	408839.57	1989		44651	1 Urbis LED	Teceo 40 LED 500mA	64 Watts	12.00 Metres	Galvanised Steel	
Y	1	STREET LIGHTING	BUTLER PLACE	CLEETHORPES	528916.7	409250.4	2010		44990	1 Urbis LED	Axia 16 LED 500mA	28 Watts	6.00 Metres	Steel	
Y	2	STREET LIGHTING	BUTLER PLACE	CLEETHORPES	528885.69	409245.19	2010		44991	1 Urbis LED	Axia 16 LED 500mA	28 Watts	6.00 Metres	Steel	
Y	3	STREET LIGHTING	BUTLER PLACE	CLEETHORPES	528858.56	409227.5	2010		44992	1 Urbis LED	Axia 16 LED 500mA	28 Watts	6.00 Metres	Steel	
Y	1	STREET LIGHTING	CLERKE STREET	CLEETHORPES	528703.93	409786.74	1988		46292	1 Urbis LED	Axia 16 LED 500mA	28 Watts	6.00 Metres	Galvanised Steel	
Y	2	STREET LIGHTING	CLERKE STREET	CLEETHORPES	528728.36	409762.94	1988		46293	1 Urbis LED	Axia 16 LED 500mA	28 Watts	6.00 Metres	Galvanised Steel	
Y	3	STREET LIGHTING	CLERKE STREET	CLEETHORPES	528759.75	409759.84	1988		46294	1 Urbis LED	Axia 16 LED 500mA	28 Watts	6.00 Metres	Galvanised Steel	
Y	4	STREET LIGHTING	CLERKE STREET	CLEETHORPES	528782.79	409736.36	1988		46295	1 Urbis LED	Axia 16 LED 500mA	28 Watts	6.00 Metres	Galvanised Steel	
Y	5	STREET LIGHTING	CLERKE STREET	CLEETHORPES	528814.81	409732.88	1988		46296	1 Urbis LED	Axia 16 LED 500mA	28 Watts	6.00 Metres	Galvanised Steel	
Y	6	STREET LIGHTING	CLERKE STREET	CLEETHORPES	528836.58	409710.16	1988		46297	1 Urbis LED	Axia 16 LED 500mA	28 Watts	6.00 Metres	Galvanised Steel	
Y	7	STREET LIGHTING	CLERKE STREET	CLEETHORPES	528871.14	409693.58	1988		46298	1 Urbis LED	Axia 16 LED 500mA	28 Watts	6.00 Metres	Galvanised Steel	
Y	1	STREET LIGHTING	COLSON PLACE	CLEETHORPES	528923.75	409417.32	2009	16/11/2009	46422	Urbis	Axia 16 LED 350mA	19 Watts	6.00 Metres	Galvanised Steel	
Y	2	STREET LIGHTING	COLSON PLACE	CLEETHORPES	528917.28	409444.61	2013	18/06/2013	46423	Urbis	Axia 16 LED 350mA	19 Watts	6.00 Metres	Steel	
Y	3	STREET LIGHTING	COLSON PLACE	CLEETHORPES	528937.4	409436.04	2013	18/06/2013	46424	Urbis	Axia 16 LED 350mA	19 Watts	6.00 Metres	Steel	
Y	1	STREET LIGHTING	COMBE STREET	CLEETHORPES	529413.38	409767.2	2010		46478	1 Urbis LED	Axia 16 LED 500mA	28 Watts	6.00 Metres	Steel	
Y	2	STREET LIGHTING	COMBE STREET	CLEETHORPES	529392.15	409747.75	2010		46479	1 Urbis LED	Axia 16 LED 500mA	28 Watts	6.00 Metres	Steel	
Y	3	STREET LIGHTING	COMBE STREET	CLEETHORPES	529381.72	409726.95	2010		46480	1 Urbis LED	Axia 16 LED 500mA	28 Watts	6.00 Metres	Steel	
Y	4	STREET LIGHTING	COMBE STREET	CLEETHORPES	529376.62	409691.02	2010		46481	1 Urbis LED	Axia 16 LED 500mA	28 Watts	6.00 Metres	Steel	
Y	5	STREET LIGHTING	COMBE STREET	CLEETHORPES	529351.07	409664.43	2010		46482	1 Urbis LED	Axia 16 LED 500mA	28 Watts	6.00 Metres	Steel	
Y	6	STREET LIGHTING	COMBE STREET	CLEETHORPES	529345.85	409628.38	2010		46483	1 Urbis LED	Axia 16 LED 500mA	28 Watts	6.00 Metres	Steel	
Y	7	STREET LIGHTING	COMBE STREET	CLEETHORPES	529322.07	409606.01	2010		46484	1 Urbis LED	Axia 16 LED 500mA	28 Watts	6.00 Metres	Steel	
Y	8	STREET LIGHTING	COMBE STREET	CLEETHORPES	529310.43	409582.13	2010		46485	1 Urbis LED	Axia 16 LED 500mA	28 Watts	6.00 Metres	Steel	
Y	1	STREET LIGHTING	CRAVEN ROAD	CLEETHORPES	528869.3	409318.73	2010		46880	1 Urbis LED	Teceo 16 LED 500mA	28 Watts	6.00 Metres	Steel	
Y	2	STREET LIGHTING	CRAVEN ROAD	CLEETHORPES	528842.64	409295.48	2010		46881	1 Urbis LED	Teceo 16 LED 500mA	28 Watts	6.00 Metres	Steel	
Y	3	STREET LIGHTING	CRAVEN ROAD	CLEETHORPES	528804.58	409286.74	2010		46882	1 Urbis LED	Teceo 16 LED 500mA	28 Watts	6.00 Metres	Steel	
Y	4	STREET LIGHTING	CRAVEN ROAD	CLEETHORPES	528781	409275.33	2010		46883	1 Urbis LED	Teceo 16 LED 500mA	28 Watts	6.00 Metres	Steel	
Y	1	STREET LIGHTING	DAUBNEY STREET	CLEETHORPES	529121.43	410153.23	2006		47304	1 Urbis LED	Axia 16 LED 500mA	28 Watts	6.00 Metres	Stainless Steel	
Y	2	STREET LIGHTING	DAUBNEY STREET	CLEETHORPES	529096.2	410124.37	2007		47305	1 Urbis LED	Axia 16 LED 500mA	28 Watts	6.00 Metres	Galvanised Steel	
Y	3	STREET LIGHTING	DAUBNEY STREET	CLEETHORPES	529091.9	410091.2	2007		47306	1 Urbis LED	Axia 16 LED 500mA	28 Watts	6.00 Metres	Galvanised Steel	
Y	4	STREET LIGHTING	DAUBNEY STREET	CLEETHORPES	529064.18	410059.62	2007		47307	1 Urbis LED	Axia 16 LED 500mA	28 Watts	6.00 Metres	Galvanised Steel	
Y	5	STREET LIGHTING	DAUBNEY STREET	CLEETHORPES	529057.98	410022.28	2007		47308	1 Urbis LED	Axia 16 LED 500mA	28 Watts	6.00 Metres	Galvanised Steel	
Y	6	STREET LIGHTING	DAUBNEY STREET	CLEETHORPES	529032.41	409995.39	2006		47309	1 Urbis LED	Axia 16 LED 500mA	28 Watts	6.00 Metres	Stainless Steel	
Y	7	STREET LIGHTING	DAUBNEY STREET	CLEETHORPES	529023.67	409953.17	2000		47310	1 Urbis LED	Axia 16 LED 500mA	28 Watts	6.00 Metres	Galvanised Steel	
Y	8	STREET LIGHTING	DAUBNEY STREET	CLEETHORPES	528997.73	409924.88	2000		47311	1 Urbis LED	Axia 16 LED 500mA	28 Watts	6.00 Metres	Galvanised Steel	
Y	9	STREET LIGHTING	DAUBNEY STREET	CLEETHORPES	528993.8	409892.29	2000		47312	1 Urbis LED	Axia 16 LED 500mA	28 Watts	6.00 Metres	Galvanised Steel	
Y	10	STREET LIGHTING	DAUBNEY STREET	CLEETHORPES	528971.14	409870.58	2000		47313	1 Urbis LED	Axia 16 LED 500mA	28 Watts	6.00 Metres	Galvanised Steel	
Y	11	STREET LIGHTING	DAUBNEY STREET	CLEETHORPES	528964.44	409833.37	2000		47314	1 Urbis LED	Axia 16 LED 500mA	28 Watts	6.00 Metres	Galvanised Steel	
Y	12	STREET LIGHTING	DAUBNEY STREET	CLEETHORPES	528946.32	409796.38	2000		47315	1 Urbis LED	Axia 16 LED 500mA	28 Watts	6.00 Metres	Galvanised Steel	
Y	13	STREET LIGHTING	DAUBNEY STREET	CLEETHORPES	528924.55	409776.57	2000		47316	1 Urbis LED	Axia 16 LED 500mA	28 Watts	6.00 Metres	Galvanised Steel	
Y	14	STREET LIGHTING	DAUBNEY STREET	CLEETHORPES	528921	409745.25	2000		47317	1 Urbis LED	Axia 16 LED 500mA	28 Watts	6.00 Metres	Galvanised Steel	
Y	15	STREET LIGHTING	DAUBNEY STREET	CLEETHORPES	528896.19	409719.49	2000		47318	1 Urbis LED	Axia 16 LED 500mA	28 Watts	6.00 Metres	Galvanised Steel	
Y	16	STREET LIGHTING	DAUBNEY STREET	CLEETHORPES	528892.52	409687.55	2000		47319	1 Urbis LED	Axia 16 LED 500mA	28 Watts	6.00 Metres	Galvanised Steel	
Y	17	STREET LIGHTING	DAUBNEY STREET	CLEETHORPES	528866.7	409659.26	2000		47320	1 Urbis LED	Axia 16 LED 500mA	28 Watts	6.00 Metres	Galvanised Steel	
Y	18	STREET LIGHTING	DAUBNEY STREET	CLEETHORPES	528861.13	409624.07	2000		47321	1 Urbis LED	Axia 16 LED 500mA	28 Watts	6.00 Metres	Galvanised Steel	
Y	19	STREET LIGHTING	DAUBNEY STREET	CLEETHORPES	528847.84	409597.07	2000		47322	1 Urbis LED	Axia 16 LED 500mA	28 Watts	6.00 Metres	Galvanised Steel	
Y	20	STREET LIGHTING	DAUBNEY STREET	CLEETHORPES	528825.56	409575.49	2000		47323	1 Urbis LED	Axia 16 LED 500mA	28 Watts	6.00 Metres	Galvanised Steel	
Y	21	STREET LIGHTING	DAUBNEY STREET	CLEETHORPES	528823.86	409547.87	2021	10/12/2021	68785	Urbis	Axia 24 LED 500mA	28 Watts	6.00 Metres	Galvanised Steel	
Y	22	STREET LIGHTING	DAUBNEY STREET	CLEETHORPES	528799.87	409523.47	2000		47325	1 Urbis LED	Axia 16 LED 500mA	28 Watts	6.00 Metres	Galvanised Steel	
Y	23	STREET LIGHTING	DAUBNEY STREET	CLEETHORPES	528797.46	409495.81	2000		47326	1 Urbis LED	Axia 16 LED 500mA	28 Watts	6.00 Metres	Galvanised Steel	
Y	24	STREET LIGHTING	DAUBNEY STREET	CLEETHORPES	528772.02	409468.16	2000		47327	1 Urbis LED	Axia 16 LED 500mA	28 Watts	6.00 Metres	Galvanised Steel	
Y	25	STREET LIGHTING	DAUBNEY STREET	CLEETHORPES	528758.23	409440.35	2000		47328	1 Urbis LED	Axia 16 LED 500mA	28 Watts	6.00 Metres	Galvanised Steel	
Y	1	STREET LIGHTING	DAVIE PLACE	CLEETHORPES	528945.08	409183.1	2010		47392	1 Urbis LED	Teceo 16 LED 500mA	28 Watts	6.00 Metres	Steel	
Y	2	STREET LIGHTING	DAVIE PLACE	CLEETHORPES	528920.68	409171.35	2010		47393	1 Urbis LED	Teceo 16 LED 500mA	28 Watts	6.00 Metres	Steel	
Y	3	STREET LIGHTING	DAVIE PLACE	CLEETHORPES	528891.23	409161.26	2010		47394	1 Urbis LED	Teceo 16 LED 500mA	28 Watts	6.00 Metres	Steel	
Y	1	STREET LIGHTING	DOUGLAS ROAD	CLEETHORPES	529805.61	409668.29	1990		47534	1 Urbis LED	Axia 16 LED 500mA	28 Watts	6.00 Metres	Galvanised Steel	
Y	2	STREET LIGHTING	DOUGLAS ROAD	CLEETHORPES	529822.44	409694.94	1990		47535	1 Urbis LED	Axia 16 LED 500mA	28 Watts	6.00 Metres	Galvanised Steel	
Y	3	STREET LIGHTING	DOUGLAS ROAD	CLEETHORPES	529841.56	409710.07	1990		47536	1 Urbis LED	Axia 16 LED 500mA	28 Watts	6.00 Metres	Galvanised Steel	
Y	4	STREET LIGHTING	DOUGLAS ROAD	CLEETHORPES	529864.85	409728.61	1990		47537	1 Urbis LED	Axia 16 LED 500mA	28 Watts	6.00 Metres	Galvanised Steel	
Y	1	STREET LIGHTING	DUGARD ROAD	CLEETHORPES	528896.71	409384.74	2010		47590	1 Urbis LED	Teceo 16 LED 500mA	28 Watts	6.00 Metres	Steel	
Y	2	STREET LIGHTING	DUGARD ROAD	CLEETHORPES	528881.07	409362.41	2010		47591	1 Urbis LED	Teceo 16 LED 500mA	28 Watts	6.00 Metres	Steel	
Y	3	STREET LIGHTING	DUGARD ROAD	CLEETHORPES	528897.65	409328.57	2010		47592	1 Urbis LED	Teceo 16 LED 500mA	28 Watts	6.00 Metres	Steel	
Y	4	STREET LIGHTING	DUGARD ROAD	CLEETHORPES	528904.61	409290.53	2010		47593	1 Urbis LED	Axia 16 LED 500mA	28 Watts	6.00 Metres	Steel	
Y	5	STREET LIGHTING	DUGARD ROAD	CLEETHORPES	528930.44	409262.22	2010		47594	1 Urbis LED	Teceo 16 LED 500mA	28 Watts	6.00 Metres	Steel	
Y	6	STREET LIGHTING	DUGARD ROAD	CLEETHORPES	528936.93	409224.48	2010		47595	1 Urbis LED	Teceo 16 LED 500mA	28 Watts	6.00 Metres	Steel	
Y	7	STREET LIGHTING	DUGARD ROAD	CLEETHORPES	528963.04	409195.97	2010		47596	1 Urbis LED	Teceo 16 LED 500mA	28 Watts	6.00 Metres	Steel	
Y	8	STREET LIGHTING	DUGARD ROAD	CLEETHORPES	528971.23	409156.07	2010		47597	1 Urbis LED	Teceo 16 LED 500mA	28 Watts	6.00 Metres	Steel	
Y	9	STREET LIGHTING	DUGARD ROAD	CLEETHORPES	528987.7	409113.95	2010		47598	1 Urbis LED	Teceo 24 LED 500mA	40 Watts	6.00 Metres	Steel	
Y	10	STREET LIGHTING	DUGARD ROAD	CLEETHORPES	528943.85	409107.37	2010		47599	1 Urbis LED	Teceo 24 LED 500mA	40 Watts	6.00 Metres	Steel	
Y	11	STREET LIGHTING	DUGARD ROAD	CLEETHORPES	528915.35	409078.78	2010		47600	1 Urbis LED	Teceo 24 LED 500mA	40 Watts	6.00 Metres	Steel	
Y	12	STREET LIGHTING	DUGARD ROAD	CLEETHORPES	528881.85	409073.47	2010		47601	1 Urbis LED	Teceo 24 LED 500mA	40 Watts	8.00 Metres	Steel	
Y	1	STREET LIGHTING	ELLISTON STREET	CLEETHORPES	529536.57	409691.64	2007		47945	1 Urbis LED	Teceo 24 LED 500mA	40 Watts	6.00 Metres	Steel	
Y	2	STREET LIGHTING	ELLISTON STREET	CLEETHORPES	529513.09	409667.84	2007		47946	1 Urbis LED	Teceo 24 LED 500mA	40 Watts	6.00 Metres	Steel	
Y	3	STREET LIGHTING	ELLISTON STREET	CLEETHORPES	529508.85	409635.23	2007		47947	1 Urbis LED	Teceo 24 LED 500mA	40 Watts	6.00 Metres	Steel	
Y	4	STREET LIGHTING	ELLISTON STREET	CLEETHORPES	529486.02	409612.22	2007		47948	1 Urbis LED	Teceo 24 LED 500mA	40 Watts	6.00 Metres	Steel	
Y	5	STREET LIGHTING	ELLISTON STREET	CLEETHORPES	529482.02	409580.16	2007		47949	1 Urbis LED	Teceo 24 LED 500mA	40 Watts	6.00 Metres	Steel	
Y	6	STREET LIGHTING	ELLISTON STREET	CLEETHORPES	529458.97	409557.55	2007		47950	1 Urbis LED	Teceo 24 LED 500mA	40 Watts	6.00 Metres	Steel	

Y	7	STREET LIGHTING	ELLISTON STREET	CLEETHORPES	529446.07	409531.5	2007		47951	1 Urbis LED	Teceo 24 LED 500mA	40 Watts	6.00 Metres	Steel	
Y	8	STREET LIGHTING	ELLISTON STREET	CLEETHORPES	529421.91	409483.03	2007		47952	1 Urbis LED	Teceo 24 LED 500mA	40 Watts	6.00 Metres	Steel	
Y	9	STREET LIGHTING	ELLISTON STREET	CLEETHORPES	529407.25	409449.3	2007		47953	1 Urbis LED	Teceo 24 LED 500mA	40 Watts	6.00 Metres	Steel	
Y	10	STREET LIGHTING	ELLISTON STREET	CLEETHORPES	529394	409426.98	2007		47954	1 Urbis LED	Teceo 24 LED 500mA	40 Watts	6.00 Metres	Steel	
Y	11	STREET LIGHTING	ELLISTON STREET	CLEETHORPES	529381.29	409401.51	2007		47955	1 Urbis LED	Teceo 24 LED 500mA	40 Watts	6.00 Metres	Steel	
Y	12	STREET LIGHTING	ELLISTON STREET	CLEETHORPES	529380.29	409334.9	2007		47956	1 Urbis LED	Teceo 24 LED 500mA	40 Watts	6.00 Metres	Steel	
Y	13	STREET LIGHTING	ELLISTON STREET	CLEETHORPES	529357.55	409354.06	2007		47957	1 Urbis LED	Teceo 24 LED 500mA	40 Watts	6.00 Metres	Steel	
Y	14	STREET LIGHTING	ELLISTON STREET	CLEETHORPES	529344.8	409328.45	2007		47958	1 Urbis LED	Teceo 24 LED 500mA	40 Watts	6.00 Metres	Steel	
Y	1	STREET LIGHTING	FREESTON STREET	CLEETHORPES	528735.84	409609.54	2014		49008	1 Urbis LED	Axia 16 LED 500mA	28 Watts	6.00 Metres	Galvanised Steel	
Y	2	STREET LIGHTING	FREESTON STREET	CLEETHORPES	528762.18	409586.55	2018	18/06/2018	67065	Urbis	Ampera 16 LED 500mA	28 Watts	6.00 Metres	Galvanised Steel	
Y	3	STREET LIGHTING	FREESTON STREET	CLEETHORPES	528796.22	409581.69	2014		49010	1 Urbis LED	Axia 16 LED 500mA	28 Watts	6.00 Metres	Galvanised Steel	
Y	4	STREET LIGHTING	FREESTON STREET	CLEETHORPES	528829.26	409553.72	1991		49011	1 Urbis LED	Axia 16 LED 500mA	28 Watts	6.00 Metres	Galvanised Steel	
Y	5	STREET LIGHTING	FREESTON STREET	CLEETHORPES	528865.35	409547.93	2018	18/06/2018	67066	Urbis	Ampera 16 LED 500mA	28 Watts	6.00 Metres	Galvanised Steel	
Y	6	STREET LIGHTING	FREESTON STREET	CLEETHORPES	528902.56	409529.79	2002		49013	1 Urbis LED	Axia 16 LED 500mA	28 Watts	6.00 Metres	Stainless Steel	
Y	7	STREET LIGHTING	FREESTON STREET	CLEETHORPES	528926.01	409518.67	2018	18/06/2018	67067	Urbis	Ampera 16 LED 500mA	28 Watts	6.00 Metres	Galvanised Steel	
Y	8	STREET LIGHTING	FREESTON STREET	CLEETHORPES	528949.65	409494.61	2018	18/06/2018	67068	Urbis	Ampera 16 LED 500mA	28 Watts	6.00 Metres	Galvanised Steel	
Y	9	STREET LIGHTING	FREESTON STREET	CLEETHORPES	528986.99	409488.22	2018	18/06/2018	67069	Urbis	Ampera 16 LED 500mA	28 Watts	6.00 Metres	Galvanised Steel	
Y	1	STREET LIGHTING	FULLER STREET	CLEETHORPES	529549.38	409741.89	2008		49051	1 Urbis LED	Teceo 16 LED 500mA	28 Watts	6.00 Metres	Stainless Steel	
Y	2	STREET LIGHTING	FULLER STREET	CLEETHORPES	529574.38	409767	2008		49052	1 Urbis LED	Teceo 16 LED 500mA	28 Watts	6.00 Metres	Stainless Steel	
Y	3	STREET LIGHTING	FULLER STREET	CLEETHORPES	529577.09	409798.01	2008		49053	1 Urbis LED	Teceo 16 LED 500mA	28 Watts	6.00 Metres	Stainless Steel	
Y	4	STREET LIGHTING	FULLER STREET	CLEETHORPES	529601.95	409823.13	2008		49054	1 Urbis LED	Teceo 16 LED 500mA	28 Watts	6.00 Metres	Stainless Steel	
Y	5	STREET LIGHTING	FULLER STREET	CLEETHORPES	529606.56	409857.78	2008		49055	1 Urbis LED	Teceo 16 LED 500mA	28 Watts	6.00 Metres	Stainless Steel	
Y	6	STREET LIGHTING	FULLER STREET	CLEETHORPES	529630.15	409880.24	2008		49056	1 Urbis LED	Teceo 16 LED 500mA	28 Watts	6.00 Metres	Stainless Steel	
Y	7	STREET LIGHTING	FULLER STREET	CLEETHORPES	529635.38	409916.13	2008		49057	1 Urbis LED	Teceo 16 LED 500mA	28 Watts	6.00 Metres	Stainless Steel	
Y	8	STREET LIGHTING	FULLER STREET	CLEETHORPES	529660.27	409941.23	2008		49058	1 Urbis LED	Teceo 16 LED 500mA	28 Watts	6.00 Metres	Stainless Steel	
Y	1	STREET LIGHTING	GARNETT STREET	CLEETHORPES	529585.44	409610.71	1992		49098	Urbis	Axia 16 LED 350mA	19 Watts	6.00 Metres	Galvanised Steel	
Y	2	STREET LIGHTING	GARNETT STREET	CLEETHORPES	529609.61	409597.23	1992		49099	Urbis	Axia 16 LED 350mA	19 Watts	6.00 Metres	Galvanised Steel	
Y	3	STREET LIGHTING	GARNETT STREET	CLEETHORPES	529616.07	409571.47	1992		49100	Urbis	Axia 16 LED 350mA	19 Watts	6.00 Metres	Galvanised Steel	
Y	4	STREET LIGHTING	GARNETT STREET	CLEETHORPES	529639.99	409556.22	1992		49101	Urbis	Axia 16 LED 350mA	19 Watts	6.00 Metres	Galvanised Steel	
Y	5	STREET LIGHTING	GARNETT STREET	CLEETHORPES	529647.21	409532.23	1992		49102	Urbis	Axia 16 LED 350mA	19 Watts	6.00 Metres	Galvanised Steel	
Y	6	STREET LIGHTING	GARNETT STREET	CLEETHORPES	529666.82	409507.61	1992		49103	Urbis	Axia 16 LED 350mA	19 Watts	6.00 Metres	Galvanised Steel	
Y	1	STREET LIGHTING	HARRINGTON STREET	CLEETHORPES	528878.83	410255.73	1986		50244	1 Urbis LED	Teceo 32 LED 500mA	52 Watts	8.00 Metres	Galvanised Steel	
Y	2	STREET LIGHTING	HARRINGTON STREET	CLEETHORPES	528913.14	410244.78	1986		50245	1 Urbis LED	Teceo 32 LED 500mA	52 Watts	8.00 Metres	Galvanised Steel	
Y	3	STREET LIGHTING	HARRINGTON STREET	CLEETHORPES	528937.19	410237.13	1986		50246	1 Urbis LED	Teceo 32 LED 500mA	52 Watts	8.00 Metres	Galvanised Steel	
Y	4	STREET LIGHTING	HARRINGTON STREET	CLEETHORPES	528973.26	410226.05	1986		50247	1 Urbis LED	Teceo 32 LED 500mA	52 Watts	8.00 Metres	Galvanised Steel	
Y	5	STREET LIGHTING	HARRINGTON STREET	CLEETHORPES	529004.02	410215.86	1986		50248	1 Urbis LED	Teceo 32 LED 500mA	52 Watts	8.00 Metres	Galvanised Steel	
Y	6	STREET LIGHTING	HARRINGTON STREET	CLEETHORPES	529039.08	410204.53	1986		50249	Urbis	AXIA 3.2 32 LED 510mA	50 Watts	8.00 Metres	Galvanised Steel	
Y	7	STREET LIGHTING	HARRINGTON STREET	CLEETHORPES	529070.09	410194.85	1986		50250	1 Urbis LED	Teceo 32 LED 500mA	52 Watts	8.00 Metres	Galvanised Steel	
Y	8	STREET LIGHTING	HARRINGTON STREET	CLEETHORPES	529101.1	410185.16	1986		50251	Urbis	AXIA 3.2 32 LED 510mA	50 Watts	8.00 Metres	Galvanised Steel	
Y	9	STREET LIGHTING	HARRINGTON STREET	CLEETHORPES	529135.41	410174.53	1986		50252	Urbis	AXIA 3.2 32 LED 510mA	50 Watts	8.00 Metres	Galvanised Steel	
Y	10	STREET LIGHTING	HARRINGTON STREET	CLEETHORPES	529161.99	410166.11	1986		50253	Urbis	AXIA 3.2 32 LED 510mA	50 Watts	8.00 Metres	Galvanised Steel	
Y	11	STREET LIGHTING	HARRINGTON STREET	CLEETHORPES	529189.58	410157.37	1986		50254	Urbis	AXIA 3.2 32 LED 510mA	50 Watts	8.00 Metres	Galvanised Steel	
Y	12	STREET LIGHTING	HARRINGTON STREET	CLEETHORPES	529226.67	410145.28	1986		50255	1 Urbis LED	Teceo 32 LED 500mA	52 Watts	8.00 Metres	Galvanised Steel	
Y	13	STREET LIGHTING	HARRINGTON STREET	CLEETHORPES	529258.31	410134.97	1986		50256	Urbis	AXIA 3.2 32 LED 510mA	50 Watts	8.00 Metres	Galvanised Steel	
Y	14	STREET LIGHTING	HARRINGTON STREET	CLEETHORPES	529295.27	410121.23	1986		50257	1 Urbis LED	Teceo 32 LED 500mA	52 Watts	8.00 Metres	Galvanised Steel	
Y	15	STREET LIGHTING	HARRINGTON STREET	CLEETHORPES	529321.6	410111.55	1986		50258	1 Urbis LED	Teceo 32 LED 500mA	52 Watts	8.00 Metres	Galvanised Steel	
Y	16	STREET LIGHTING	HARRINGTON STREET	CLEETHORPES	529352.99	410099.59	1986		50259	1 Urbis LED	Teceo 32 LED 500mA	52 Watts	8.00 Metres	Galvanised Steel	
Y	17	STREET LIGHTING	HARRINGTON STREET	CLEETHORPES	529383.88	410087.37	1986		50260	1 Urbis LED	Teceo 32 LED 500mA	52 Watts	8.00 Metres	Galvanised Steel	
Y	18	STREET LIGHTING	HARRINGTON STREET	CLEETHORPES	529411.5	410075.51	1986		50261	Urbis	AXIA 3.2 32 LED 510mA	50 Watts	8.00 Metres	Galvanised Steel	
Y	19	STREET LIGHTING	HARRINGTON STREET	CLEETHORPES	529445.42	410059.75	1986		50262	1 Urbis LED	Teceo 32 LED 500mA	52 Watts	8.00 Metres	Galvanised Steel	
Y	20	STREET LIGHTING	HARRINGTON STREET	CLEETHORPES	529476.31	410050.64	1986		50263	1 Urbis LED	Axia 16 LED 500mA	28 Watts	5.00 Metres	Galvanised Steel	
Y	21	STREET LIGHTING	HARRINGTON STREET	CLEETHORPES	529502.89	410037.79	1986		50264	1 Urbis LED	Axia 16 LED 500mA	28 Watts	5.00 Metres	Galvanised Steel	
Y	22	STREET LIGHTING	HARRINGTON STREET	CLEETHORPES	529539.98	410019.12	2017		50265	1 Urbis LED	Axia 16 LED 500mA	28 Watts	6.00 Metres	Galvanised Steel	
Y	23	STREET LIGHTING	HARRINGTON STREET	CLEETHORPES	529567.7	410004.63	1986		50266	1 Urbis LED	Axia 16 LED 500mA	28 Watts	5.00 Metres	Galvanised Steel	
Y	24	STREET LIGHTING	HARRINGTON STREET	CLEETHORPES	529590.1	409992.98	2019	24/01/2019	50267	Urbis	Axia 16 LED 500mA	28 Watts	6.00 Metres	Galvanised Steel	
Y	25	STREET LIGHTING	HARRINGTON STREET	CLEETHORPES	529622.61	409975.47	1986		50268	1 Urbis LED	Axia 16 LED 500mA	28 Watts	5.00 Metres	Galvanised Steel	
Y	26	STREET LIGHTING	HARRINGTON STREET	CLEETHORPES	529653.24	409958.95	1986		50269	1 Urbis LED	Axia 16 LED 500mA	28 Watts	5.00 Metres	Galvanised Steel	
Y	27	STREET LIGHTING	HARRINGTON STREET	CLEETHORPES	529675.77	409944.96	1986		50270	1 Urbis LED	Axia 16 LED 500mA	28 Watts	5.00 Metres	Galvanised Steel	
Y	28	STREET LIGHTING	HARRINGTON STREET	CLEETHORPES	529708.94	409925.02	2024	20/09/2024	50271	Urbis	Axia 24 LED 500mA	28 Watts	6.00 Metres	Galvanised Steel	
Y	1	STREET LIGHTING	HART STREET	CLEETHORPES	529349.34	409798.85	1992		50282	1 Urbis LED	Axia 16 LED 500mA	28 Watts	6.00 Metres	Galvanised Steel	
Y	2	STREET LIGHTING	HART STREET	CLEETHORPES	529326.81	409778.28	1992		50283	1 Urbis LED	Axia 16 LED 500mA	28 Watts	6.00 Metres	Galvanised Steel	
Y	3	STREET LIGHTING	HART STREET	CLEETHORPES	529324.91	409749.42	1992		50284	1 Urbis LED	Axia 16 LED 500mA	28 Watts	6.00 Metres	Galvanised Steel	
Y	4	STREET LIGHTING	HART STREET	CLEETHORPES	529311.74	409722.65	1992		50285	1 Urbis LED	Axia 16 LED 500mA	28 Watts	6.00 Metres	Galvanised Steel	
Y	5	STREET LIGHTING	HART STREET	CLEETHORPES	529290.73	409704.49	1992		50286	1 Urbis LED	Axia 16 LED 500mA	28 Watts	6.00 Metres	Galvanised Steel	
Y	6	STREET LIGHTING	HART STREET	CLEETHORPES	529290.35	409679.61	1992		50287	1 Urbis LED	Axia 16 LED 500mA	28 Watts	6.00 Metres	Galvanised Steel	
Y	7	STREET LIGHTING	HART STREET	CLEETHORPES	529278.83	409655.88	1992		50288	1 Urbis LED	Axia 16 LED 500mA	28 Watts	6.00 Metres	Galvanised Steel	
Y	8	STREET LIGHTING	HART STREET	CLEETHORPES	529267.31	409632.78	1992		50289	1 Urbis LED	Axia 16 LED 500mA	28 Watts	6.00 Metres	Galvanised Steel	
Y	9	STREET LIGHTING	HART STREET	CLEETHORPES	529246.3	409614.11	1992		50290	1 Urbis LED	Axia 16 LED 500mA	28 Watts	6.00 Metres	Galvanised Steel	
Y	1	STREET LIGHTING	IMPERIAL AVENUE	CLEETHORPES	529351.94	409829.53	2011		51287	1 Urbis LED	Axia 16 LED 500mA	28 Watts	6.00 Metres	Steel	
Y	2	STREET LIGHTING	IMPERIAL AVENUE	CLEETHORPES	529375.18	409851.75	2011		51288	1 Urbis LED	Axia 16 LED 500mA	28 Watts	6.00 Metres	Steel	
Y	3	STREET LIGHTING	IMPERIAL AVENUE	CLEETHORPES	529377.93	409881.72	2011		51289	1 Urbis LED	Axia 16 LED 500mA	28 Watts	6.00 Metres	Steel	
Y	4	STREET LIGHTING	IMPERIAL AVENUE	CLEETHORPES	529397.9	409898.44	2011		51290	1 Urbis LED	Axia 16 LED 500mA	28 Watts	6.00 Metres	Steel	
Y	1	STREET LIGHTING	JENNER PLACE	CLEETHORPES	528780.75	409510.12	2015	30/07/2015	51441	Urbis	Axia 16 LED 350mA	19 Watts	6.00 Metres	Galvanised Steel	
Y	2	STREET LIGHTING	JENNER PLACE	CLEETHORPES	528750.5	409519.61	2015	30/07/2015	51442	Urbis	Axia 16 LED 350mA	19 Watts	6.00 Metres	Galvanised Steel	
Y	1	STREET LIGHTING	JOHNSON STREET	CLEETHORPES	528717.97	409689.84	1972		51448	1 Urbis LED	Teceo 24 LED 500mA	40 Watts	5.00 Metres	Galvanised Steel	
Y	2	STREET LIGHTING	JOHNSON STREET	CLEETHORPES	528755.57	409680.28	1972		51449	1 Urbis LED	Teceo 24 LED 500mA	40 Watts	5.00 Metres	Galvanised Steel	
Y	3	STREET LIGHTING	JOHNSON STREET	CLEETHORPES	528791.26	409653.51	1977		51450	1 Urbis LED	Teceo 24 LED 500mA	40 Watts	5.00 Metres	Galvanised Steel	
Y	4	STREET LIGHTING	JOHNSON STREET	CLEETHORPES	528830.5	409643.76	2014		51451	1 Urbis LED	Teceo 24 LED 500mA	40 Watts	6.00 Metres	Galvanised Steel	
Y	1	STREET LIGHTING	KATHLEEN AVENUE	CLEETHORPES	529791.81	409627.92	2016	12/09/2016	51471	Urbis	Axia 16 LED 350mA	19 Watts	6.00 Metres	Galvanised Steel	
Y	2	STREET LIGHTING	KATHLEEN AVENUE	CLEETHORPES	529768.78	409652.48	1951	16/12/2014	51472	Urbis	Axia 16 LED 350mA	19 Watts	6.00 Metres	Galvanised Steel	
Y	1	STREET LIGHTING	LAURIER STREET	CLEETHORPES	529853.96	409660.89	1990		52383	Urbis	Axia 16 LED 350mA	19 Watts	6.00 Metres	Galvanised Steel	
Y	2	STREET LIGHTING	LAURIER STREET	CLEETHORPES	529845.98	409687.78	1990		52384	Urbis	Axia 16 LED 350mA	19 Watts	6.00 Metres	Galvanised Steel	
Y	1	STREET LIGHTING	LESTRANGE STREET	CLEETHORPES	529722.1	409530.51	1991		52481	1 Urbis LED	Teceo 24 LED 500mA	40 Watts	6.00 Metres	Galvanised Steel	
Y	2	STREET LIGHTING	LESTRANGE STREET	CLEETHORPES	529703.36	409528.23	1991		52482	1 Urbis LED	Teceo 24 LED 500mA	40 Watts	6.00 Metres	Galvanised Steel	
Y	3	STREET LIGHTING	LESTRANGE STREET	CLEETHORPES	529683.62	409499.35	1991		52483	1 Urbis LED	Teceo 24 LED 500mA	40 Watts	6.00 Metres	Galvanised Steel	
Y	4	STREET LIGHTING	LESTRANGE STREET	CLEETHORPES	529662.96	409482.88	1991		52484	1 Urbis LED	Teceo 24 LED 500mA	40 Watts	6.00 Metres	Galvanised Steel	
Y	5	STREET LIGHTING	LESTRANGE STREET	CLEETHORPES	529636.13	409474.84	1991		52485	1 Urbis LED	Teceo 24 LED 500mA	40 Watts	6.00 Metres	Galvanised Steel	
Y	6	STREET LIGHTING	LESTRANGE STREET	CLEETHORPES	529618.53	409447.75	1991		52486	1 Urbis LED	Teceo 24 LED 500mA	40 Watts	6.00 Metres	Galvanised Steel	
Y	7	STREET LIGHTING	LESTRANGE STREET	CLEETHORPES	529592.33	409440.1	1991		52487	1 Urbis LED	Teceo 24 LED 500mA	40 Watts	6.00 Metres	Galvanised Steel	
Y	8	STREET LIGHTING	LESTRANGE STREET	CLEETHORPES	529570.69	409422.95	1991		52488	1 Urbis LED	Teceo 24 LED 500mA	40 Watts	6.00 Metres	Galvanised Steel	
Y	9	STREET LIGHTING	LESTRANGE STREET	CLEETHORPES	529553.35	409393.77	1991		52489	1 Urbis LED	Teceo 32 LED 500mA	52 Watts	8.00 Metres	Galvanised Steel	
Y	10	STREET LIGHTING	LESTRANGE STREET	CLEETHORPES	529525.75	409387	1991		52490	1 Urbis LED	Teceo 32 LED 500mA	52 Watts	8.00 Metres	Galvanised Steel	
Y	11	STREET LIGHTING	LESTRANGE STREET	CLEETHORPES	529509.3	409359.03	1991		52491	1 Urbis LED	Teceo 32 LED 500mA	52 Watts	8.00 Metres	Galvanised Steel	
Y	12	STREET LIGHTING	LESTRANGE STREET	CLEETHORPES	529479.17	409350.36	1991		52492	1 Urbis LED	Teceo 32 LED 500mA	52 Watts	8.00 Metres	Galvanised Steel	
Y	13	STREET LIGHTING	LESTRANGE STREET	CLEETHORPES	529464.74	409323.65	1991		52493	1 Urbis LED	Teceo 32 LED 500mA	52 Watts	8.00 Metres	Galvanised Steel	
Y	14	STREET LIGHTING	LESTRANGE STREET	CLEETHORPES	529432.34	409312.91	1991		52494	1 Urbis LED	Teceo 32 LED 500mA	52 Watts	8.00 Metres	Galvanised Steel	
Y	15	STREET LIGHTING	LESTRANGE STREET	CLEETHORPES	529412.34	409288.42	1991		52495	1 Urbis LED	Teceo 32 LED 500mA	52 Watts	8.00 Metres	Galvanised Steel	
Y	16	STREET LIGHTING	LESTRANGE STREET	CLEETHORPES	529386.12	409280.49	1991		52496	1 Urbis LED	Teceo 32 LED 500mA	52 Watts	8.00 Metres	Galvanised Steel	
Y	1	STREET LIGHTING	LEWIS ROAD	CLEETHORPES	529899.81	409659.77	2016	30/06/2016	66834	Urbis	Axia 16 LED 350mA	19 Watts	6.00 Metres	Galvanised Steel	
Y	2	STREET LIGHTING	LEWIS ROAD	CLEETHORPES	529917.12	409635.76	2016	30/06/2016	52499	Urbis	Axia 16 LED 350mA	19 Watts	6.00 Metres	Galvanised Steel	
Y	1	STREET LIGHTING	LOVETT STREET	CLEETHORPES	529265.73	410119.69	2012		62639	1 Urbis LED	Teceo 16 LED 500mA	28 Watts	6.00 Metres	Steel	
Y	2	STREET LIGHTING	LOVETT STREET	CLEETHORPES	529241.95	410094.95	2012		62640	1 Urbis LED	Teceo 16 LED 500mA	28 Watts	6.00 Metres	Steel	
Y	3	STREET LIGHTING	LOVETT STREET	CLEETHORPES	529229.99	410070.77	2012		62641	1 Urbis LED	Teceo 16 LED 500mA	28 Watts	6.00 Metres	Steel	
Y	4	STREET LIGHTING	LOVETT STREET	CLEETHORPES	529224.32	410037.53	2012		52940	1 Urbis LED	Teceo 16 LED 500mA	28 Watts	6.00 Metres	Steel	
Y	5	STREET LIGHTING	LOVETT STREET	CLEETHORPES	529200.9	410009.81	2012		52941	1 Urbis LED	Teceo 16 LED 500mA	28 Watts	6.00 Metres	Steel	
Y	6	STREET LIGHTING	LOVETT STREET	CLEETHORPES	529186.21	409982.57	2012		62642	1 Urbis LED	Teceo 16 LED 500mA	28 Watts	6.00 Metres	Steel	
Y	7	STREET LIGHTING	LOVETT STREET	CLEETHORPES	529180.28	409946.66	2012		62643	1 Urbis LED	Teceo 16 LED 500mA	28 Watts	6.00 Metres	Steel	
Y	8	STREET LIGHTING	LOVETT STREET	CLEETHORPES	529160.55	409930.65	2012		62647	1 Urbis LED	Teceo 16 LED 500mA	28 Watts	6.00 Metres	Steel	
Y	9	STREET LIGHTING	LOVETT STREET	CLEETHORPES	529150.64	409886.42	2012		62646	1 Urbis LED	Teceo 16 LED 500mA	28 Watts	6.00 Metres	Steel	
Y	10	STREET LIGHTING	LOVETT STREET	CLEETHORPES	529125.17	409859.08	2012		62645	1 Urbis LED	Teceo 16 LED 500mA	28 Watts	6.00 Metres	Steel	

Y	11	STREET LIGHTING	LOVETT STREET	CLEETHORPES	529118.18	409820.69	2012		62644	1 Urbis LED	Teceo 16 LED 500mA	28 Watts	6.00 Metres	Steel	
Y	12	STREET LIGHTING	LOVETT STREET	CLEETHORPES	529093.94	409794.44	2012		52942	1 Urbis LED	Teceo 16 LED 500mA	28 Watts	6.00 Metres	Steel	
Y	13	STREET LIGHTING	LOVETT STREET	CLEETHORPES	529087.57	409758.86	2012		62648	1 Urbis LED	Teceo 16 LED 500mA	28 Watts	6.00 Metres	Steel	
Y	14	STREET LIGHTING	LOVETT STREET	CLEETHORPES	529062.93	409733.25	2012		52943	1 Urbis LED	Teceo 16 LED 500mA	28 Watts	6.00 Metres	Steel	
Y	15	STREET LIGHTING	LOVETT STREET	CLEETHORPES	529052.27	409711.62	2012		62649	1 Urbis LED	Teceo 16 LED 500mA	28 Watts	6.00 Metres	Steel	
Y	16	STREET LIGHTING	LOVETT STREET	CLEETHORPES	529050.06	409683.14	2012		52944	1 Urbis LED	Teceo 16 LED 500mA	28 Watts	6.00 Metres	Steel	
Y	17	STREET LIGHTING	LOVETT STREET	CLEETHORPES	529037.94	409658.55	2012		52945	1 Urbis LED	Teceo 16 LED 500mA	28 Watts	6.00 Metres	Steel	
Y	18	STREET LIGHTING	LOVETT STREET	CLEETHORPES	529013.19	409631.75	2012		52946	1 Urbis LED	Teceo 16 LED 500mA	28 Watts	6.00 Metres	Steel	
Y	19	STREET LIGHTING	LOVETT STREET	CLEETHORPES	528999.59	409605.07	2005		52947	1 Urbis LED	Teceo 16 LED 500mA	28 Watts	6.00 Metres	Stainless Steel	
Y	20	STREET LIGHTING	LOVETT STREET	CLEETHORPES	528986.4	409577.01	2012		52948	1 Urbis LED	Teceo 16 LED 500mA	28 Watts	6.00 Metres	Steel	
Y	21	STREET LIGHTING	LOVETT STREET	CLEETHORPES	528980.09	409541.16	2012		52949	1 Urbis LED	Teceo 16 LED 500mA	28 Watts	6.00 Metres	Steel	
Y	22	STREET LIGHTING	LOVETT STREET	CLEETHORPES	528954.08	409512.77	2012		52950	1 Urbis LED	Teceo 16 LED 500mA	28 Watts	6.00 Metres	Steel	
Y	1	STREET LIGHTING	MANCHESTER STREET	CLEETHORPES	529624.42	409704.77	2006		53169	1 Urbis LED	Axia 16 LED 500mA	28 Watts	6.00 Metres	Stainless Steel	
Y	2	STREET LIGHTING	MANCHESTER STREET	CLEETHORPES	529630.99	409721.08	1992		53170	1 Urbis LED	Axia 16 LED 500mA	28 Watts	6.00 Metres	Galvanised Steel	
Y	3	STREET LIGHTING	MANCHESTER STREET	CLEETHORPES	529636.44	409754.56	1992		53171	1 Urbis LED	Axia 16 LED 500mA	28 Watts	6.00 Metres	Galvanised Steel	
Y	4	STREET LIGHTING	MANCHESTER STREET	CLEETHORPES	529661.12	409780.19	1992		53172	1 Urbis LED	Axia 16 LED 500mA	28 Watts	6.00 Metres	Galvanised Steel	
Y	5	STREET LIGHTING	MANCHESTER STREET	CLEETHORPES	529664.41	409810.95	1992		53173	1 Urbis LED	Axia 16 LED 500mA	28 Watts	6.00 Metres	Galvanised Steel	
Y	6	STREET LIGHTING	MANCHESTER STREET	CLEETHORPES	529686.94	409832.66	1992		53174	1 Urbis LED	Axia 16 LED 500mA	28 Watts	6.00 Metres	Galvanised Steel	
Y	7	STREET LIGHTING	MANCHESTER STREET	CLEETHORPES	529690.61	409864.37	1992		53175	1 Urbis LED	Axia 16 LED 500mA	28 Watts	6.00 Metres	Galvanised Steel	
Y	8	STREET LIGHTING	MANCHESTER STREET	CLEETHORPES	529714.03	409887.4	1992		53176	1 Urbis LED	Axia 16 LED 500mA	28 Watts	6.00 Metres	Galvanised Steel	
Y	9	STREET LIGHTING	MANCHESTER STREET	CLEETHORPES	529727.7	409914.81	1992		53177	1 Urbis LED	Axia 16 LED 500mA	28 Watts	6.00 Metres	Galvanised Steel	
Y	1	STREET LIGHTING	MATHEWS STREET	CLEETHORPES	529406.71	409389.96	1983		53412	1 Urbis LED	Axia 16 LED 500mA	28 Watts	5.00 Metres	Galvanised Steel	
Y	2	STREET LIGHTING	MATHEWS STREET	CLEETHORPES	529431.01	409370.15	2015	30/07/2015	53413	1 Urbis LED	Axia 16 LED 500mA	28 Watts	6.00 Metres	Galvanised Steel	
Y	3	STREET LIGHTING	MATHEWS STREET	CLEETHORPES	529455.57	409348.44	1987		53414	1 Urbis LED	Axia 16 LED 500mA	28 Watts	5.00 Metres	Galvanised Steel	
Y	1	STREET LIGHTING	MAY STREET	CLEETHORPES	529549.11	409543.05	1995		53428	Urbis	Axia 16 LED 350mA	19 Watts	6.00 Metres	Galvanised Steel	
Y	2	STREET LIGHTING	MAY STREET	CLEETHORPES	529567.46	409520.65	1995		53429	Urbis	Axia 16 LED 350mA	19 Watts	6.00 Metres	Galvanised Steel	
Y	3	STREET LIGHTING	MAY STREET	CLEETHORPES	529590.75	409508.56	1995		53430	Urbis	Axia 16 LED 350mA	19 Watts	6.00 Metres	Galvanised Steel	
Y	4	STREET LIGHTING	MAY STREET	CLEETHORPES	529607.71	409487.74	1995		53431	Urbis	Axia 16 LED 350mA	19 Watts	6.00 Metres	Galvanised Steel	
Y	5	STREET LIGHTING	MAY STREET	CLEETHORPES	529614.17	409462.16	1995		53432	Urbis	Axia 16 LED 350mA	19 Watts	6.00 Metres	Galvanised Steel	
Y	1	STREET LIGHTING	MONTAGUE STREET	CLEETHORPES	528834.25	410145.79	2008		53765	1 Urbis LED	Teceo 24 LED 500mA	40 Watts	6.00 Metres	Stainless Steel	
Y	2	STREET LIGHTING	MONTAGUE STREET	CLEETHORPES	528855.43	410123.41	2008		53766	1 Urbis LED	Teceo 24 LED 500mA	40 Watts	6.00 Metres	Stainless Steel	
Y	3	STREET LIGHTING	MONTAGUE STREET	CLEETHORPES	528890.33	410118.8	2008		53767	1 Urbis LED	Teceo 24 LED 500mA	40 Watts	6.00 Metres	Stainless Steel	
Y	4	STREET LIGHTING	MONTAGUE STREET	CLEETHORPES	528914.54	410094.79	2008		53768	1 Urbis LED	Teceo 24 LED 500mA	40 Watts	6.00 Metres	Stainless Steel	
Y	5	STREET LIGHTING	MONTAGUE STREET	CLEETHORPES	528948.16	410091.22	2008		53769	1 Urbis LED	Teceo 24 LED 500mA	40 Watts	6.00 Metres	Stainless Steel	
Y	6	STREET LIGHTING	MONTAGUE STREET	CLEETHORPES	528973	410066	2008		53770	1 Urbis LED	Teceo 24 LED 500mA	40 Watts	6.00 Metres	Stainless Steel	
Y	1	STREET LIGHTING	NEVILLE STREET	CLEETHORPES	529482.64	409768.88	1990		54000	1 Urbis LED	Axia 16 LED 500mA	28 Watts	6.00 Metres	Galvanised Steel	
Y	2	STREET LIGHTING	NEVILLE STREET	CLEETHORPES	529495.42	409794.64	1990		54001	1 Urbis LED	Axia 16 LED 500mA	28 Watts	6.00 Metres	Galvanised Steel	
Y	3	STREET LIGHTING	NEVILLE STREET	CLEETHORPES	529508.71	409822.11	1990		54002	1 Urbis LED	Axia 16 LED 500mA	28 Watts	6.00 Metres	Galvanised Steel	
Y	4	STREET LIGHTING	NEVILLE STREET	CLEETHORPES	529529.85	409840.4	1990		54003	1 Urbis LED	Axia 16 LED 500mA	28 Watts	6.00 Metres	Galvanised Steel	
Y	5	STREET LIGHTING	NEVILLE STREET	CLEETHORPES	529534.79	409874.51	1990		54004	1 Urbis LED	Axia 16 LED 500mA	28 Watts	6.00 Metres	Galvanised Steel	
Y	6	STREET LIGHTING	NEVILLE STREET	CLEETHORPES	529557.32	409895.97	1990		54005	1 Urbis LED	Axia 16 LED 500mA	28 Watts	6.00 Metres	Galvanised Steel	
Y	7	STREET LIGHTING	NEVILLE STREET	CLEETHORPES	529561.5	409928.75	1990		54006	1 Urbis LED	Axia 16 LED 500mA	28 Watts	6.00 Metres	Galvanised Steel	
Y	8	STREET LIGHTING	NEVILLE STREET	CLEETHORPES	529584.41	409950.72	1990		54007	1 Urbis LED	Axia 16 LED 500mA	28 Watts	6.00 Metres	Galvanised Steel	
Y	9	STREET LIGHTING	NEVILLE STREET	CLEETHORPES	529598.08	409978.63	1990		54008	1 Urbis LED	Axia 16 LED 500mA	28 Watts	6.00 Metres	Galvanised Steel	
Y	1	STREET LIGHTING	OLIVER STREET	CLEETHORPES	529723.4	409881.2	1990		54403	1 Urbis LED	Axia 16 LED 500mA	28 Watts	6.00 Metres	Galvanised Steel	
Y	2	STREET LIGHTING	OLIVER STREET	CLEETHORPES	529744.41	409859.62	1990		54404	1 Urbis LED	Axia 16 LED 500mA	28 Watts	6.00 Metres	Galvanised Steel	
Y	3	STREET LIGHTING	OLIVER STREET	CLEETHORPES	529777.32	409854.88	1990		54405	1 Urbis LED	Axia 16 LED 500mA	28 Watts	6.00 Metres	Galvanised Steel	
Y	4	STREET LIGHTING	OLIVER STREET	CLEETHORPES	529803.27	409838.36	1990		54406	1 Urbis LED	Axia 16 LED 500mA	28 Watts	6.00 Metres	Galvanised Steel	
Y	5	STREET LIGHTING	OLIVER STREET	CLEETHORPES	529818.33	409814.12	1990		54407	1 Urbis LED	Axia 16 LED 500mA	28 Watts	6.00 Metres	Galvanised Steel	
Y	6	STREET LIGHTING	OLIVER STREET	CLEETHORPES	529850.48	409803.36	1990		54408	1 Urbis LED	Axia 16 LED 500mA	28 Watts	6.00 Metres	Galvanised Steel	
Y	7	STREET LIGHTING	OLIVER STREET	CLEETHORPES	529869.09	409776.65	1990		54409	1 Urbis LED	Axia 16 LED 500mA	28 Watts	6.00 Metres	Galvanised Steel	
Y	8	STREET LIGHTING	OLIVER STREET	CLEETHORPES	529894.53	409768.68	1990		54410	1 Urbis LED	Axia 16 LED 500mA	28 Watts	6.00 Metres	Galvanised Steel	
Y	9	STREET LIGHTING	OLIVER STREET	CLEETHORPES	529914.79	409745.26	1990		54411	1 Urbis LED	Axia 16 LED 500mA	28 Watts	6.00 Metres	Galvanised Steel	
Y	10	STREET LIGHTING	OLIVER STREET	CLEETHORPES	529925.67	409716.72	1990		54412	1 Urbis LED	Axia 16 LED 500mA	28 Watts	6.00 Metres	Galvanised Steel	
Y	1	STREET LIGHTING	PARK VIEW	CLEETHORPES	529112.91	409647.82	1992		54705	1 Urbis LED	Axia 16 LED 500mA	28 Watts	6.00 Metres	Galvanised Steel	
Y	2	STREET LIGHTING	PARK VIEW	CLEETHORPES	529092.78	409630.29	1992		54706	1 Urbis LED	Axia 16 LED 500mA	28 Watts	6.00 Metres	Galvanised Steel	
Y	3	STREET LIGHTING	PARK VIEW	CLEETHORPES	529081.77	409608.27	1992		54707	1 Urbis LED	Axia 16 LED 500mA	28 Watts	6.00 Metres	Galvanised Steel	
Y	4	STREET LIGHTING	PARK VIEW	CLEETHORPES	529071.01	409586.56	1992		54708	1 Urbis LED	Axia 16 LED 500mA	28 Watts	6.00 Metres	Galvanised Steel	
Y	5	STREET LIGHTING	PARK VIEW	CLEETHORPES	529059.87	409564.15	1992		54709	1 Urbis LED	Axia 16 LED 500mA	28 Watts	6.00 Metres	Galvanised Steel	
Y	6	STREET LIGHTING	PARK VIEW	CLEETHORPES	529049.24	409542.83	1992		54710	1 Urbis LED	Axia 16 LED 500mA	28 Watts	6.00 Metres	Galvanised Steel	
Y	7	STREET LIGHTING	PARK VIEW	CLEETHORPES	529037.97	409520.61	1992		54711	1 Urbis LED	Axia 16 LED 500mA	28 Watts	6.00 Metres	Galvanised Steel	
Y	8	STREET LIGHTING	PARK VIEW	CLEETHORPES	529027.21	409498.52	1992		54712	1 Urbis LED	Axia 16 LED 500mA	28 Watts	6.00 Metres	Galvanised Steel	
Y	9	STREET LIGHTING	PARK VIEW	CLEETHORPES	529015.44	409475.04	1992		54713	1 Urbis LED	Axia 16 LED 500mA	28 Watts	6.00 Metres	Galvanised Steel	
Y	10	STREET LIGHTING	PARK VIEW	CLEETHORPES	529003.04	409449.73	1992		54714	1 Urbis LED	Axia 16 LED 500mA	28 Watts	6.00 Metres	Galvanised Steel	
Y	11	STREET LIGHTING	PARK VIEW	CLEETHORPES	528990.63	409424.86	1992		54715	1 Urbis LED	Axia 16 LED 500mA	28 Watts	6.00 Metres	Galvanised Steel	
Y	12	STREET LIGHTING	PARK VIEW	CLEETHORPES	528980.76	409397.33	1992		54716	1 Urbis LED	Axia 16 LED 500mA	28 Watts	6.00 Metres	Galvanised Steel	
Y	1	STREET LIGHTING	PHELPS STREET	CLEETHORPES	528963.11	410019.11	2008		55382	1 Urbis LED	Axia 16 LED 500mA	28 Watts	6.00 Metres	Stainless Steel	
Y	2	STREET LIGHTING	PHELPS STREET	CLEETHORPES	528985.05	410032.21	2008		55383	1 Urbis LED	Axia 16 LED 500mA	28 Watts	6.00 Metres	Stainless Steel	
Y	3	STREET LIGHTING	PHELPS STREET	CLEETHORPES	528996.33	410060.48	2008		55384	1 Urbis LED	Axia 16 LED 500mA	28 Watts	6.00 Metres	Stainless Steel	
Y	4	STREET LIGHTING	PHELPS STREET	CLEETHORPES	529010.65	410089.42	2008		55385	1 Urbis LED	Axia 16 LED 500mA	28 Watts	6.00 Metres	Stainless Steel	
Y	5	STREET LIGHTING	PHELPS STREET	CLEETHORPES	529024.84	410118.27	2008		55386	1 Urbis LED	Axia 16 LED 500mA	28 Watts	6.00 Metres	Stainless Steel	
Y	6	STREET LIGHTING	PHELPS STREET	CLEETHORPES	529040.15	410149.51	2008		55387	1 Urbis LED	Axia 16 LED 500mA	28 Watts	6.00 Metres	Stainless Steel	
Y	7	STREET LIGHTING	PHELPS STREET	CLEETHORPES	529053.04	410175.25	2008		55388	1 Urbis LED	Axia 16 LED 500mA	28 Watts	6.00 Metres	Stainless Steel	
Y	8	STREET LIGHTING	PHELPS STREET	CLEETHORPES	529062	410194	2008		55389	1 Urbis LED	Axia 16 LED 500mA	28 Watts	6.00 Metres	Stainless Steel	
Y	1	STREET LIGHTING	SIDNEY STREET	CLEETHORPES	528774.65	410023.62	1988		57190	1 Urbis LED	Axia 16 LED 500mA	28 Watts	6.00 Metres	Galvanised Steel	
Y	2	STREET LIGHTING	SIDNEY STREET	CLEETHORPES	528790.98	410003.94	1988		57191	1 Urbis LED	Axia 16 LED 500mA	28 Watts	6.00 Metres	Galvanised Steel	
Y	3	STREET LIGHTING	SIDNEY STREET	CLEETHORPES	528828.19	409997.6	1988		57192	1 Urbis LED	Axia 16 LED 500mA	28 Watts	6.00 Metres	Galvanised Steel	
Y	4	STREET LIGHTING	SIDNEY STREET	CLEETHORPES	528848.95	409975.96	1988		57193	1 Urbis LED	Axia 16 LED 500mA	28 Watts	6.00 Metres	Galvanised Steel	
Y	5	STREET LIGHTING	SIDNEY STREET	CLEETHORPES	528883.76	409970.7	1988		57194	1 Urbis LED	Axia 16 LED 500mA	28 Watts	6.00 Metres	Galvanised Steel	
Y	6	STREET LIGHTING	SIDNEY STREET	CLEETHORPES	528905.03	409948.68	1988		57195	1 Urbis LED	Axia 16 LED 500mA	28 Watts	6.00 Metres	Galvanised Steel	
Y	7	STREET LIGHTING	SIDNEY STREET	CLEETHORPES	528933.63	409946.72	1988		57196	1 Urbis LED	Axia 16 LED 500mA	28 Watts	6.00 Metres	Galvanised Steel	
Y	8	STREET LIGHTING	SIDNEY STREET	CLEETHORPES	528955.11	409924.33	1988		57197	1 Urbis LED	Axia 16 LED 500mA	28 Watts	6.00 Metres	Galvanised Steel	
Y	9	STREET LIGHTING	SIDNEY STREET	CLEETHORPES	528982.45	409911.35	1988		57198	1 Urbis LED	Axia 16 LED 500mA	28 Watts	6.00 Metres	Galvanised Steel	
Y	1	STREET LIGHTING	SIDNEY WAY	CLEETHORPES	528801.12	409987.92	1992		57204	1 Urbis LED	Axia 16 LED 500mA	28 Watts	5.00 Metres	Galvanised Steel	
Y	2	STREET LIGHTING	SIDNEY WAY	CLEETHORPES	528796.93	409961.66	1992		57205	1 Urbis LED	Axia 16 LED 500mA	28 Watts	5.00 Metres	Galvanised Steel	
Y	3	STREET LIGHTING	SIDNEY WAY	CLEETHORPES	528815.99	409956.47	2019	10/12/2019	67646	Urbis	Teceo 16 LED 500mA	28 Watts	6.00 Metres	Galvanised Steel	
Y	4	STREET LIGHTING	SIDNEY WAY	CLEETHORPES	528836.04	409944.76	1992		57207	1 Urbis LED	Axia 16 LED 500mA	28 Watts	5.00 Metres	Galvanised Steel	
Y	5	STREET LIGHTING	SIDNEY WAY	CLEETHORPES	528849.2	409932.93	1992		57208	1 Urbis LED	Axia 16 LED 500mA	28 Watts	5.00 Metres	Galvanised Steel	
Y	1	STREET LIGHTING	STANHOPE PLACE	CLEETHORPES	529315.23	409284.45	2013		58123	Urbis	Axia 16 LED 350mA	19 Watts	6.00 Metres	Steel	
Y	2	STREET LIGHTING	STANHOPE PLACE	CLEETHORPES	529288.36	409264.53	2013		58124	Urbis	Axia 16 LED 350mA	19 Watts	6.00 Metres	Steel	
Y	3	STREET LIGHTING	STANHOPE PLACE	CLEETHORPES	529280	409283.98	2013		58125	Urbis	Axia 16 LED 350mA	19 Watts	6.00 Metres	Steel	
Y	1	STREET LIGHTING	SUGGITTS COURT	CLEETHORPES	529870.16	409609	1981		58553	Urbis	Axia 16 LED 350mA	19 Watts	5.00 Metres	Galvanised Steel	
Y	2	STREET LIGHTING	SUGGITTS COURT	CLEETHORPES	529882.06	409593.87	1981		58554	Urbis	Axia 16 LED 350mA	19 Watts	5.00 Metres	Galvanised Steel	
Y	1	STREET LIGHTING	SUGGITTS LANE	CLEETHORPES	529756.52	409568.65	1989		58555	1 Urbis LED	Teceo 16 LED 500mA	28 Watts	5.00 Metres	Cast Iron	
Y	2	STREET LIGHTING	SUGGITTS LANE	CLEETHORPES	529793.48	409586.56	1989		58556	1 Urbis LED	Teceo 16 LED 500mA	28 Watts	5.00 Metres	Galvanised Steel	
Y	3	STREET LIGHTING	SUGGITTS LANE	CLEETHORPES	529816.64	409617.09	2006		58557	1 Urbis LED	Teceo 16 LED 500mA	28 Watts	6.00 Metres	Stainless Steel	
Y	4	STREET LIGHTING	SUGGITTS LANE	CLEETHORPES	529846.62	409640.52	2016	30/06/2016	58558	Urbis	Teceo 16 LED 500mA	25 Watts	6.00 Metres	Galvanised Steel	
Y	5	STREET LIGHTING	SUGGITTS LANE	CLEETHORPES	529880.1	409655.91	2008		58559	1 Urbis LED	Teceo 16 LED 500mA	28 Watts	6.00 Metres	Steel	
Y	6	STREET LIGHTING	SUGGITTS LANE	CLEETHORPES	529906.55	409688.07	2008		58560	1 Urbis LED	Teceo 16 LED 500mA	28 Watts	6.00 Metres	Steel	
Y	7	STREET LIGHTING	SUGGITTS LANE	CLEETHORPES	529941.75	409706.28	2014		58561	1 Urbis LED	Teceo 16 LED 500mA	28 Watts	6.00 Metres	Galvanised Steel	
Y	8	STREET LIGHTING	SUGGITTS LANE	CLEETHORPES	529968.08	409736.73	1998		58562	1 Urbis LED	Teceo 16 LED 500mA	28 Watts	5.00 Metres	Galvanised Steel	
Y	1	STREET LIGHTING	SUSSEX STREET	CLEETHORPES	528738.75	409948.97	1989		58600	1 Urbis LED	Axia 16 LED 500mA	28 Watts	6.00 Metres	Galvanised Steel	
Y	2	STREET LIGHTING	SUSSEX STREET	CLEETHORPES	528761.28	409936.69	1989		58601	1 Urbis LED	Axia 16 LED 500mA	28 Watts	6.00 Metres	Galvanised Steel	
Y	3	STREET LIGHTING	SUSSEX STREET	CLEETHORPES	528784.44	409926.75	1989		58602	1 Urbis LED	Axia 16 LED 500mA	28 Watts	6.00 Metres	Galvanised Steel	
Y	4	STREET LIGHTING	SUSSEX STREET	CLEETHORPES	528809.76	409914.41	1989		58603	1 Urbis LED	Axia 16 LED 500mA	28 Watts	6.00 Metres	Galvanised Steel	
Y	5	STREET LIGHTING	SUSSEX STREET	CLEETHORPES	528835.58	409901.63	1989		58604	1 Urbis LED	Axia 16 LED 500mA	28 Watts	6.00 Metres	Galvanised Steel	
Y	6	STREET LIGHTING	SUSSEX STREET	CLEETHORPES	528860.39	409889.6	1989		58605	1 Urbis LED	Axia 16 LED 500mA	28 Watts	6.00 Metres	Galvanised Steel	
Y	7	STREET LIGHTING	SUSSEX STREET	CLEETHORPES	528884.56	409877.89	1989		58606	1 Urbis LED	Axia 16 LED 500mA	28 Watts	6.00 Metres	Galvanised Steel	
Y	8	STREET LIGHTING	SUSSEX STREET	CLEETHORPES	528907.85	409866.44	1989		58607	1 Urbis LED	Axia 16 LED 500mA	28 Watts	6.00 Metres	Galvanised Steel	
Y	9	STREET LIGHTING	SUSSEX STREET	CLEETHORPES	528931.65	409854.92	1989		58608	1 Urbis LED	Axia 16 LED 500mA	28 Watts	6.00 Metres	Galvanised Steel	

Y	10	STREET LIGHTING	SUSSEX STREET	CLEETHORPES	528953.8	409844.1	1989		58609	1 Urbis LED	Axia 16 LED 500mA	28 Watts	6.00 Metres	Galvanised Steel	
Y	1	STREET LIGHTING	TAYLOR STREET	CLEETHORPES	528859.22	410201.07	2008		58765	1 Urbis LED	Teceo 24 LED 500mA	40 Watts	6.00 Metres	Stainless Steel	
Y	2	STREET LIGHTING	TAYLOR STREET	CLEETHORPES	528879.28	410179.26	2008		58766	1 Urbis LED	Teceo 24 LED 500mA	40 Watts	6.00 Metres	Stainless Steel	
Y	3	STREET LIGHTING	TAYLOR STREET	CLEETHORPES	528908.75	410177.36	2008		58767	1 Urbis LED	Teceo 24 LED 500mA	40 Watts	6.00 Metres	Stainless Steel	
Y	4	STREET LIGHTING	TAYLOR STREET	CLEETHORPES	528933.15	410153.4	2008		58768	1 Urbis LED	Teceo 24 LED 500mA	40 Watts	6.00 Metres	Stainless Steel	
Y	5	STREET LIGHTING	TAYLOR STREET	CLEETHORPES	528969.39	410148.42	2008		58769	1 Urbis LED	Teceo 24 LED 500mA	40 Watts	6.00 Metres	Stainless Steel	
Y	6	STREET LIGHTING	TAYLOR STREET	CLEETHORPES	528993.58	410124.31	2008		58770	1 Urbis LED	Teceo 24 LED 500mA	40 Watts	6.00 Metres	Stainless Steel	
Y	1	STREET LIGHTING	TIVERTON STREET	CLEETHORPES	529336.49	410101.46	2012		59246	1 Urbis LED	Axia 16 LED 500mA	28 Watts	6.00 Metres	Steel	
Y	2	STREET LIGHTING	TIVERTON STREET	CLEETHORPES	529323.93	410075.72	2012		59247	1 Urbis LED	Axia 16 LED 500mA	28 Watts	6.00 Metres	Steel	
Y	3	STREET LIGHTING	TIVERTON STREET	CLEETHORPES	529298.72	410048.65	2012		59248	1 Urbis LED	Axia 16 LED 500mA	28 Watts	6.00 Metres	Steel	
Y	4	STREET LIGHTING	TIVERTON STREET	CLEETHORPES	529292.62	410012.47	2012		59249	1 Urbis LED	Axia 16 LED 500mA	28 Watts	6.00 Metres	Steel	
Y	5	STREET LIGHTING	TIVERTON STREET	CLEETHORPES	529266.33	409982.16	2012		59250	1 Urbis LED	Axia 16 LED 500mA	28 Watts	6.00 Metres	Steel	
Y	6	STREET LIGHTING	TIVERTON STREET	CLEETHORPES	529258.39	409943.3	2012		59251	1 Urbis LED	Axia 16 LED 500mA	28 Watts	6.00 Metres	Steel	
Y	7	STREET LIGHTING	TIVERTON STREET	CLEETHORPES	529236.89	409923.48	2012		59252	1 Urbis LED	Axia 16 LED 500mA	28 Watts	6.00 Metres	Steel	
Y	8	STREET LIGHTING	TIVERTON STREET	CLEETHORPES	529224.71	409898.77	2004		59253	1 Urbis LED	Axia 16 LED 500mA	28 Watts	6.00 Metres	Stainless Steel	
Y	9	STREET LIGHTING	TIVERTON STREET	CLEETHORPES	529209.47	409867.49	2012		59254	1 Urbis LED	Axia 16 LED 500mA	28 Watts	6.00 Metres	Steel	
Y	10	STREET LIGHTING	TIVERTON STREET	CLEETHORPES	529203.19	409830.87	2012		59255	1 Urbis LED	Axia 16 LED 500mA	28 Watts	6.00 Metres	Steel	
Y	11	STREET LIGHTING	TIVERTON STREET	CLEETHORPES	529177.84	409803.38	2012		59256	1 Urbis LED	Axia 16 LED 500mA	28 Watts	6.00 Metres	Steel	
Y	12	STREET LIGHTING	TIVERTON STREET	CLEETHORPES	529170.46	409764.34	2012		59257	1 Urbis LED	Axia 16 LED 500mA	28 Watts	6.00 Metres	Steel	
Y	13	STREET LIGHTING	TIVERTON STREET	CLEETHORPES	529145.14	409736.8	2012		59258	1 Urbis LED	Axia 16 LED 500mA	28 Watts	6.00 Metres	Steel	
Y	14	STREET LIGHTING	TIVERTON STREET	CLEETHORPES	529139.11	409700.37	2012		59259	1 Urbis LED	Axia 16 LED 500mA	28 Watts	6.00 Metres	Steel	
Y	15	STREET LIGHTING	TIVERTON STREET	CLEETHORPES	529116.89	409679.54	2012		59260	1 Urbis LED	Axia 16 LED 500mA	28 Watts	6.00 Metres	Steel	
Y	1	STREET LIGHTING	WARD STREET	CLEETHORPES	529476.08	409731.54	2008		59798	1 Urbis LED	Axia 16 LED 500mA	28 Watts	6.00 Metres	Stainless Steel	
Y	2	STREET LIGHTING	WARD STREET	CLEETHORPES	529452.2	409707.54	2008		59799	1 Urbis LED	Axia 16 LED 500mA	28 Watts	6.00 Metres	Stainless Steel	
Y	3	STREET LIGHTING	WARD STREET	CLEETHORPES	529446.5	409671.24	2008		59800	1 Urbis LED	Axia 16 LED 500mA	28 Watts	6.00 Metres	Stainless Steel	
Y	4	STREET LIGHTING	WARD STREET	CLEETHORPES	529421.34	409644.84	2008		59801	1 Urbis LED	Axia 16 LED 500mA	28 Watts	6.00 Metres	Stainless Steel	
Y	5	STREET LIGHTING	WARD STREET	CLEETHORPES	529405.98	409613.69	2008		59802	1 Urbis LED	Axia 16 LED 500mA	28 Watts	6.00 Metres	Stainless Steel	
Y	6	STREET LIGHTING	WARD STREET	CLEETHORPES	529401.93	409580.51	2008		59803	1 Urbis LED	Axia 16 LED 500mA	28 Watts	6.00 Metres	Stainless Steel	
Y	7	STREET LIGHTING	WARD STREET	CLEETHORPES	529378.31	409556.59	2008		59804	1 Urbis LED	Axia 16 LED 500mA	28 Watts	6.00 Metres	Stainless Steel	
Y	8	STREET LIGHTING	WARD STREET	CLEETHORPES	529371.39	409518.58	2008		59805	1 Urbis LED	Axia 16 LED 500mA	28 Watts	6.00 Metres	Stainless Steel	
Y	1	STREET LIGHTING	WARNEFORD ROAD	CLEETHORPES	529686.78	409671.12	2016	19/09/2016	59811	1 Urbis LED	Teceo 24 LED 500mA	40 Watts	6.00 Metres	Galvanised Steel	
Y	2	STREET LIGHTING	WARNEFORD ROAD	CLEETHORPES	529718.55	409690.9	2016	19/09/2016	59812	1 Urbis LED	Teceo 24 LED 500mA	40 Watts	6.00 Metres	Galvanised Steel	
Y	3	STREET LIGHTING	WARNEFORD ROAD	CLEETHORPES	529741.21	409719.32	2016	19/09/2016	59813	1 Urbis LED	Teceo 24 LED 500mA	40 Watts	6.00 Metres	Galvanised Steel	
Y	4	STREET LIGHTING	WARNEFORD ROAD	CLEETHORPES	529775.89	409735.71	1987		59814	1 Urbis LED	Teceo 24 LED 500mA	40 Watts	5.00 Metres	Galvanised Steel	
Y	5	STREET LIGHTING	WARNEFORD ROAD	CLEETHORPES	529814.12	409774.96	2016	19/09/2016	59815	1 Urbis LED	Teceo 24 LED 500mA	40 Watts	6.00 Metres	Galvanised Steel	
Y	1	STREET LIGHTING	WILSON STREET	CLEETHORPES	529694.26	409812.21	2006		60757	1 Urbis LED	Axia 16 LED 500mA	28 Watts	6.00 Metres	Stainless Steel	
Y	2	STREET LIGHTING	WILSON STREET	CLEETHORPES	529708.28	409794.26	2006		60758	1 Urbis LED	Axia 16 LED 500mA	28 Watts	6.00 Metres	Stainless Steel	
Y	3	STREET LIGHTING	WILSON STREET	CLEETHORPES	529732.32	409793.89	2006		60759	1 Urbis LED	Axia 16 LED 500mA	28 Watts	6.00 Metres	Stainless Steel	
Y	4	STREET LIGHTING	WILSON STREET	CLEETHORPES	529761.12	409764.83	1985		60760	1 Urbis LED	Axia 16 LED 500mA	28 Watts	5.00 Metres	Galvanised Steel	
Y	1	STREET LIGHTING	YOUNG PLACE	CLEETHORPES	528802.41	409391.53	2013		61426	Urbis	Axia 16 LED 350mA	19 Watts	6.00 Metres	Steel	
Y	2	STREET LIGHTING	YOUNG PLACE	CLEETHORPES	528796.11	409361.85	2013		61427	Urbis	Axia 16 LED 350mA	19 Watts	6.00 Metres	Steel	
Y	3	STREET LIGHTING	YOUNG PLACE	CLEETHORPES	528816.84	409351.65	2013		61428	Urbis	Axia 16 LED 350mA	19 Watts	6.00 Metres	Steel	
Y	1	STREET LIGHTING	PARK STREET	GRIMSBY	528872.11	410246.23	2007		54676	1 Urbis LED	Teceo 48 LED 700mA	104 Watts	10.00 Metres	Steel	
Y	2	STREET LIGHTING	PARK STREET	GRIMSBY	528847.45	410222.2	2007		54677	1 Urbis LED	Teceo 48 LED 700mA	104 Watts	10.00 Metres	Steel	
Y	3	STREET LIGHTING	PARK STREET	GRIMSBY	528843.71	410189.22	2007		54678	1 Urbis LED	Teceo 48 LED 700mA	104 Watts	10.00 Metres	Steel	
Y	4	STREET LIGHTING	PARK STREET	GRIMSBY	528818.8	410164.13	2007		54679	1 Urbis LED	Teceo 48 LED 700mA	104 Watts	10.00 Metres	Steel	
Y	5	STREET LIGHTING	PARK STREET	GRIMSBY	528812.33	410123.6	2002		54680	1 Urbis LED	Teceo 48 LED 700mA	104 Watts	8.00 Metres	Stainless Steel	
Y	6	STREET LIGHTING	PARK STREET	GRIMSBY	528786.78	410107.87	1991		54681	1 Urbis LED	Teceo 48 LED 700mA	104 Watts	12.00 Metres	Galvanised Steel	
Y	7	STREET LIGHTING	PARK STREET	GRIMSBY	528780.98	410062.54	1991		54682	1 Urbis LED	Teceo 48 LED 700mA	104 Watts	12.00 Metres	Galvanised Steel	
Y	8	STREET LIGHTING	PARK STREET	GRIMSBY	528760.85	410045.26	1991		54683	1 Urbis LED	Teceo 40 LED 500mA	64 Watts	8.00 Metres	Galvanised Steel	
Y	9	STREET LIGHTING	PARK STREET	GRIMSBY	528758.7	410013.68	1991		54684	1 Urbis LED	Teceo 40 LED 500mA	64 Watts	8.00 Metres	Galvanised Steel	
Y	10	STREET LIGHTING	PARK STREET	GRIMSBY	528734.78	409991.59	1991		54685	1 Urbis LED	Teceo 40 LED 500mA	64 Watts	8.00 Metres	Galvanised Steel	
Y	11	STREET LIGHTING	PARK STREET	GRIMSBY	528731.84	409958.04	1991		54686	1 Urbis LED	Teceo 40 LED 500mA	64 Watts	8.00 Metres	Galvanised Steel	
Y	12	STREET LIGHTING	PARK STREET	GRIMSBY	528710.87	409936.63	2024	04/09/2024	69978	Urbis	Teceo 40 LED 500mA	64 Watts	8.00 Metres	Galvanised Steel	
Y	13	STREET LIGHTING	PARK STREET	GRIMSBY	528707.56	409908.56			69979						
Y	14	STREET LIGHTING	PARK STREET	GRIMSBY	528694.73	409882.43	1991		54689	1 Urbis LED	Teceo 40 LED 500mA	64 Watts	8.00 Metres	Galvanised Steel	
Y	15	STREET LIGHTING	PARK STREET	GRIMSBY	528678.58	409864.19	1991		54690	1 Urbis LED	Teceo 40 LED 500mA	64 Watts	8.00 Metres	Galvanised Steel	
Y	16	STREET LIGHTING	PARK STREET	GRIMSBY	528680.61	409831.34	1991		54691	1 Urbis LED	Teceo 40 LED 500mA	64 Watts	8.00 Metres	Galvanised Steel	
Y	17	STREET LIGHTING	PARK STREET	GRIMSBY	528681.87	409797.3	1991		54692	1 Urbis LED	Teceo 40 LED 500mA	64 Watts	8.00 Metres	Galvanised Steel	
Y	18	STREET LIGHTING	PARK STREET	GRIMSBY	528693.39	409775.59	1991		54693	1 Urbis LED	Teceo 40 LED 500mA	64 Watts	8.00 Metres	Galvanised Steel	
Y	19	STREET LIGHTING	PARK STREET	GRIMSBY	528693.27	409744.29	1991		54694	1 Urbis LED	Teceo 40 LED 500mA	64 Watts	8.00 Metres	Galvanised Steel	
Y	20	STREET LIGHTING	PARK STREET	GRIMSBY	528681.54	409713.74	2004		54695	1 Urbis LED	Teceo 40 LED 500mA	64 Watts	8.00 Metres	Stainless Steel	
Y	21	STREET LIGHTING	PARK STREET	GRIMSBY	528693.65	409688.09	2017	17/07/2017	54696	1 Urbis LED	Teceo 40 LED 500mA	64 Watts	8.00 Metres	Galvanised Steel	
Y	22	STREET LIGHTING	PARK STREET	GRIMSBY	528694.15	409659.86	1991		54697	1 Urbis LED	Teceo 40 LED 500mA	64 Watts	8.00 Metres	Galvanised Steel	
Y	23	STREET LIGHTING	PARK STREET	GRIMSBY	528682.93	409627.12	2023	12/06/2023	69257	Urbis	Teceo 40 LED 500mA	64 Watts	8.00 Metres	Galvanised Steel	
Y	24	STREET LIGHTING	PARK STREET	GRIMSBY	528694.79	409602.71	1991		54699	1 Urbis LED	Teceo 40 LED 500mA	64 Watts	8.00 Metres	Galvanised Steel	
Y	25	STREET LIGHTING	PARK STREET	GRIMSBY	528685.04	409575.56	1991		54700	1 Urbis LED	Teceo 40 LED 500mA	64 Watts	8.00 Metres	Galvanised Steel	
Y	27	STREET LIGHTING	PARK STREET	GRIMSBY	528685.8	409516.13	1991		54702	1 Urbis LED	Teceo 40 LED 500mA	64 Watts	8.00 Metres	Galvanised Steel	
Y	28	STREET LIGHTING	PARK STREET	GRIMSBY	528696.18	409487.46	1991		54703	1 Urbis LED	Teceo 40 LED 500mA	64 Watts	8.00 Metres	Galvanised Steel	
Y	29	STREET LIGHTING	PARK STREET	GRIMSBY	528695.42	409456.9	1991		54704	1 Urbis LED	Teceo 40 LED 500mA	64 Watts	8.00 Metres	Galvanised Steel	
Y	1	STREET LIGHTING	QUEEN MARY AVENUE	CLEETHORPES	528708.47	409430.27	1983		55765	1 Urbis LED	Teceo 32 LED 500mA	52 Watts	10.00 Metres	Galvanised Steel	
Y	2	STREET LIGHTING	QUEEN MARY AVENUE	CLEETHORPES	528726.82	409438.24	1983		55766	1 Urbis LED	Teceo 32 LED 500mA	52 Watts	8.00 Metres	Galvanised Steel	
Y	3	STREET LIGHTING	QUEEN MARY AVENUE	CLEETHORPES	528759.04	409418.67	2006		55767	1 Urbis LED	Teceo 32 LED 500mA	52 Watts	8.00 Metres	Stainless Steel	
Y	4	STREET LIGHTING	QUEEN MARY AVENUE	CLEETHORPES	528784.67	409426.16	1999		55768	1 Urbis LED	Teceo 32 LED 500mA	52 Watts	8.00 Metres	Galvanised Steel	
Y	5	STREET LIGHTING	QUEEN MARY AVENUE	CLEETHORPES	528815.17	409420.15	1983		55769	1 Urbis LED	Teceo 32 LED 500mA	52 Watts	8.00 Metres	Galvanised Steel	
Y	6	STREET LIGHTING	QUEEN MARY AVENUE	CLEETHORPES	528839.99	409404.09	1983		55770	1 Urbis LED	Teceo 32 LED 500mA	52 Watts	8.00 Metres	Galvanised Steel	
Y	7	STREET LIGHTING	QUEEN MARY AVENUE	CLEETHORPES	528878.25	409407.33	2023	08/09/2023	69304	Urbis	Teceo 32 LED 500mA	52 Watts	8.00 Metres	Galvanised Steel	
Y	8	STREET LIGHTING	QUEEN MARY AVENUE	CLEETHORPES	528904.03	409401.43	1983		55772	1 Urbis LED	Teceo 32 LED 500mA	52 Watts	8.00 Metres	Galvanised Steel	
Y	9	STREET LIGHTING	QUEEN MARY AVENUE	CLEETHORPES	528936.44	409384.2	1983		55773	1 Urbis LED	Teceo 32 LED 500mA	52 Watts	8.00 Metres	Galvanised Steel	
Y	10	STREET LIGHTING	QUEEN MARY AVENUE	CLEETHORPES	528972.51	409387.69	2007		55774	1 Urbis LED	Teceo 32 LED 500mA	52 Watts	8.00 Metres	Galvanised Steel	
Y	11	STREET LIGHTING	QUEEN MARY AVENUE	CLEETHORPES	529000.41	409381.81	2017		55775	1 Urbis LED	Teceo 32 LED 500mA	52 Watts	8.00 Metres	Galvanised Steel	
Y	12	STREET LIGHTING	QUEEN MARY AVENUE	CLEETHORPES	529033.32	409364.98	1983		55776	1 Urbis LED	Teceo 32 LED 500mA	52 Watts	8.00 Metres	Galvanised Steel	
Y	13	STREET LIGHTING	QUEEN MARY AVENUE	CLEETHORPES	529061.93	409369.1	1983		55777	1 Urbis LED	Teceo 32 LED 500mA	52 Watts	8.00 Metres	Galvanised Steel	
Y	14	STREET LIGHTING	QUEEN MARY AVENUE	CLEETHORPES	529086.74	409353.97	1983		55778	1 Urbis LED	Teceo 32 LED 500mA	52 Watts	8.00 Metres	Galvanised Steel	
Y	15	STREET LIGHTING	QUEEN MARY AVENUE	CLEETHORPES	529113.07	409358.91	1983		55779	1 Urbis LED	Teceo 32 LED 500mA	52 Watts	8.00 Metres	Galvanised Steel	
Y	16	STREET LIGHTING	QUEEN MARY AVENUE	CLEETHORPES	529143.57	409342.14	2017		55780	1 Urbis LED	Teceo 32 LED 500mA	52 Watts	8.00 Metres	Galvanised Steel	
Y	17	STREET LIGHTING	QUEEN MARY AVENUE	CLEETHORPES	529179.27	409345.62	1983		55781	1 Urbis LED	Teceo 32 LED 500mA	52 Watts	8.00 Metres	Galvanised Steel	
Y	18	STREET LIGHTING	QUEEN MARY AVENUE	CLEETHORPES	529207.62	409329.29	1983		55782	1 Urbis LED	Teceo 32 LED 500mA	52 Watts	8.00 Metres	Galvanised Steel	
Y	19	STREET LIGHTING	QUEEN MARY AVENUE	CLEETHORPES	529237.75	409333.41	1983		55783	1 Urbis LED	Teceo 32 LED 500mA	52 Watts	8.00 Metres	Galvanised Steel	
Y	20	STREET LIGHTING	QUEEN MARY AVENUE	CLEETHORPES	529268.89	409316.76	1983		55784	1 Urbis LED	Teceo 32 LED 500mA	52 Watts	8.00 Metres	Galvanised Steel	
Y	21	STREET LIGHTING	QUEEN MARY AVENUE	CLEETHORPES	529293.19	409321.89	1983		55785	1 Urbis LED	Teceo 32 LED 500mA	52 Watts	8.00 Metres	Galvanised Steel	
Y	22	STREET LIGHTING	QUEEN MARY AVENUE	CLEETHORPES	529329.59	409314.04	1983		55786	1 Urbis LED	Teceo 40 LED 500mA	64 Watts	8.00 Metres	Galvanised Steel	
Y	23	STREET LIGHTING	QUEEN MARY AVENUE	CLEETHORPES	529353.89	409288.15	1983		55787	1 Urbis LED	Teceo 40 LED 500mA	64 Watts	8.00 Metres	Galvanised Steel	
Y	1	STREET LIGHTING	SUGGITTS ORCHARD	CLEETHORPES	529958.58	409706.78	1981		58563	1 Urbis LED	Axia 16 LED 500mA	28 Watts	5.00 Metres	Galvanised Steel	
Y	2	STREET LIGHTING	SUGGITTS ORCHARD	CLEETHORPES	529980.1	409678.62	1981		58564	1 Urbis LED	Axia 16 LED 500mA	28 Watts	5.00 Metres	Galvanised Steel	
Y	3	STREET LIGHTING	SUGGITTS ORCHARD	CLEETHORPES	529981.75	409653.5	1981		58565	1 Urbis LED	Axia 16 LED 500mA	28 Watts	5.00 Metres	Galvanised Steel	
Y	4	STREET LIGHTING	SUGGITTS ORCHARD	CLEETHORPES	530007.57	409680.14	1981		58566	1 Urbis LED	Axia 16 LED 500mA	28 Watts	5.00 Metres	Galvanised Steel	
Y	1	STREET LIGHTING	GRIMSBY ROAD	CLEETHORPES	528807.61	410086.09	1994		49776	1 Urbis LED	Ampera 48 LED 700mA	104 Watts	12.00 Metres	Galvanised Steel	
Y	2	STREET LIGHTING	GRIMSBY ROAD	CLEETHORPES	528799	410066.72	1994		49777	1 Urbis LED	Ampera 48 LED 700mA	104 Watts	12.00 Metres	Galvanised Steel	
Y	3	STREET LIGHTING	GRIMSBY ROAD	CLEETHORPES	528838.16	410069.8	1994		62964	1 Urbis LED	Ampera 48 LED 700mA	104 Watts	12.00 Metres	Galvanised Steel	
Y	4	STREET LIGHTING	GRIMSBY ROAD	CLEETHORPES	528832.38	410053.18	1994		62965	1 Urbis LED	Ampera 48 LED 700mA	104 Watts	12.00 Metres	Galvanised Steel	
Y	5	STREET LIGHTING	GRIMSBY ROAD	CLEETHORPES	528871.41	410053.88	1994		49778	1 Urbis LED	Teceo 48 LED 700mA	104 Watts	12.00 Metres	Galvanised Steel	
Y	6	STREET LIGHTING	GRIMSBY ROAD	CLEETHORPES	528905.71	410037.23	1992		49779	1 Urbis LED	Ampera 48 LED 700mA	104 Watts	10.00 Metres	Galvanised Steel	
Y	7	STREET LIGHTING	GRIMSBY ROAD	CLEETHORPES	528934.31	410023.5	1992		49780	1 Urbis LED	Ampera 48 LED 700mA	104 Watts	10.00 Metres	Galvanised Steel	
Y	8	STREET LIGHTING	GRIMSBY ROAD	CLEETHORPES	528959.02	409993.72	1992		49781	1 Urbis LED	Ampera 48 LED 700mA	104 Watts	10.00 Metres	Galvanised Steel	
Y	9	STREET LIGHTING	GRIMSBY ROAD	CLEETHORPES	528987.12	409980.24	1992		49782	1 Urbis LED	Ampera 48 LED 700mA	104 Watts	10.00 Metres	Galvanised Steel	
Y	10	STREET LIGHTING	GRIMSBY ROAD	CLEETHORPES	529021.25	409980.04	1992		49783	1 Urbis LED	Ampera 48 LED 700mA	104 Watts	10.00 Metres	Galvanised Steel	
Y	11	STREET LIGHTING	GRIMSBY ROAD	CLEETHORPES	529041.37	409954.21	1993		49784	1 Urbis LED	Ampera 48 LED 700mA	104 Watts	12.00 Metres	Galvanised Steel	
Y	12	STREET LIGHTING	GRIMSBY ROAD	CLEETHORPES	529071.88	409939.72	1993		49785	1 Urbis LED	Ampera 48 LED 700mA	104 Watts	12.00 Metres	Galvanised Steel	
Y	13	STREET LIGHTING	GRIMSBY ROAD	CLEETHORPES	529110.99	409937.12	2010		49786	1 Urbis LED	Ampera 48 LED 700mA	104 Watts	12.00 Metres	Steel	

Y	14	STREET LIGHTING	GRIMSBY ROAD	CLEETHORPES	529137.57	409907.44	1993		49787	1 Urbis LED	Ampera 48 LED 700mA	104 Watts	12.00 Metres	Galvanised Steel	
Y	15	STREET LIGHTING	GRIMSBY ROAD	CLEETHORPES	529177.07	409905.6	1992		49788	1 Urbis LED	Ampera 48 LED 700mA	104 Watts	10.00 Metres	Galvanised Steel	
Y	16	STREET LIGHTING	GRIMSBY ROAD	CLEETHORPES	529201.62	409879.21	1993		49789	1 Urbis LED	Ampera 48 LED 700mA	104 Watts	12.00 Metres	Galvanised Steel	
Y	17	STREET LIGHTING	GRIMSBY ROAD	CLEETHORPES	529239.59	409875.48	1994		49790	1 Urbis LED	Ampera 48 LED 700mA	104 Watts	12.00 Metres	Galvanised Steel	
Y	18	STREET LIGHTING	GRIMSBY ROAD	CLEETHORPES	529269.97	409847.44	1994		49791	1 Urbis LED	Ampera 48 LED 700mA	104 Watts	12.00 Metres	Galvanised Steel	
Y	19	STREET LIGHTING	GRIMSBY ROAD	CLEETHORPES	529306.05	409841.93	1994		49792	1 Urbis LED	Ampera 48 LED 700mA	104 Watts	12.00 Metres	Galvanised Steel	
Y	20	STREET LIGHTING	GRIMSBY ROAD	CLEETHORPES	529334.02	409815.54	1994		49793	1 Urbis LED	Ampera 48 LED 700mA	104 Watts	12.00 Metres	Galvanised Steel	
Y	21	STREET LIGHTING	GRIMSBY ROAD	CLEETHORPES	529368.96	409812.44	1994		49794	1 Urbis LED	Ampera 48 LED 700mA	104 Watts	12.00 Metres	Galvanised Steel	
Y	22	STREET LIGHTING	GRIMSBY ROAD	CLEETHORPES	529398.07	409784.78	1994		49795	1 Urbis LED	Ampera 48 LED 700mA	104 Watts	12.00 Metres	Galvanised Steel	
Y	23	STREET LIGHTING	GRIMSBY ROAD	CLEETHORPES	529432.88	409781.93	1994		49796	1 Urbis LED	Ampera 48 LED 700mA	104 Watts	12.00 Metres	Galvanised Steel	
Y	24	STREET LIGHTING	GRIMSBY ROAD	CLEETHORPES	529460.34	409753.9	1994		49797	1 Urbis LED	Ampera 48 LED 700mA	104 Watts	12.00 Metres	Galvanised Steel	
Y	25	STREET LIGHTING	GRIMSBY ROAD	CLEETHORPES	529501.23	409749.72	1992		49798	1 Urbis LED	Ampera 48 LED 700mA	104 Watts	10.00 Metres	Galvanised Steel	
Y	26	STREET LIGHTING	GRIMSBY ROAD	CLEETHORPES	529524.9	409723.2	1994		49799	1 Urbis LED	Ampera 48 LED 700mA	104 Watts	12.00 Metres	Galvanised Steel	
Y	27	STREET LIGHTING	GRIMSBY ROAD	CLEETHORPES	529565.28	409717.57	1994		49800	1 Urbis LED	Ampera 48 LED 700mA	104 Watts	12.00 Metres	Galvanised Steel	
Y	28	STREET LIGHTING	GRIMSBY ROAD	CLEETHORPES	529599.07	409701.81	1994		49801	1 Urbis LED	Ampera 48 LED 700mA	104 Watts	12.00 Metres	Galvanised Steel	
Y	29	STREET LIGHTING	GRIMSBY ROAD	CLEETHORPES	529620.84	409673.26	1994		49802	1 Urbis LED	Ampera 48 LED 700mA	104 Watts	12.00 Metres	Galvanised Steel	
Y	30	STREET LIGHTING	GRIMSBY ROAD	CLEETHORPES	529657.8	409663.83	1994		49803	1 Urbis LED	Ampera 48 LED 700mA	104 Watts	12.00 Metres	Galvanised Steel	
Y	31	STREET LIGHTING	GRIMSBY ROAD	CLEETHORPES	529665.65	409629.09	1994		49804	1 Urbis LED	Ampera 48 LED 700mA	104 Watts	12.00 Metres	Galvanised Steel	
Y	32	STREET LIGHTING	GRIMSBY ROAD	CLEETHORPES	529697.68	409614.72	1994		49805	1 Urbis LED	Ampera 48 LED 700mA	104 Watts	12.00 Metres	Galvanised Steel	
Y	33	STREET LIGHTING	GRIMSBY ROAD	CLEETHORPES	529704.72	409579.5	1992		49806	1 Urbis LED	Ampera 48 LED 700mA	104 Watts	12.00 Metres	Galvanised Steel	
Y	34	STREET LIGHTING	GRIMSBY ROAD	CLEETHORPES	529735.97	409562.75	2008		49807	1 Urbis LED	Ampera 48 LED 700mA	104 Watts	12.00 Metres	Steel	
Y	35	STREET LIGHTING	GRIMSBY ROAD	CLEETHORPES	529747.11	409524.91	1994		49808	1 Urbis LED	Ampera 48 LED 700mA	104 Watts	12.00 Metres	Galvanised Steel	
Y	36	STREET LIGHTING	GRIMSBY ROAD	CLEETHORPES	529769.26	409496.24	1994		49809	1 Urbis LED	Ampera 48 LED 700mA	104 Watts	12.00 Metres	Galvanised Steel	
Y	37	STREET LIGHTING	GRIMSBY ROAD	CLEETHORPES	529803.06	409479.84	1992		49810	1 Urbis LED	Ampera 48 LED 700mA	104 Watts	10.00 Metres	Galvanised Steel	
Y	38	STREET LIGHTING	GRIMSBY ROAD	CLEETHORPES	529812.04	409441.87	1992		49811	1 Urbis LED	Ampera 48 LED 700mA	104 Watts	10.00 Metres	Galvanised Steel	
Y	39	STREET LIGHTING	GRIMSBY ROAD	CLEETHORPES	529844.83	409423.73	1992		49812	1 Urbis LED	Ampera 48 LED 700mA	104 Watts	10.00 Metres	Galvanised Steel	
Y	40	STREET LIGHTING	GRIMSBY ROAD	CLEETHORPES	529867.48	409397.15	1992		49813	1 Urbis LED	Teceo 48 LED 700mA	104 Watts	10.00 Metres	Galvanised Steel	
Y	41	STREET LIGHTING	GRIMSBY ROAD	CLEETHORPES	529877.99	409359.36	1992		49814	1 Urbis LED	Ampera 48 LED 700mA	104 Watts	10.00 Metres	Galvanised Steel	
Y	42	STREET LIGHTING	GRIMSBY ROAD	CLEETHORPES	529902.29	409351.58	1992		49815	1 Urbis LED	Ampera 48 LED 700mA	104 Watts	10.00 Metres	Galvanised Steel	
Y	43	STREET LIGHTING	GRIMSBY ROAD	CLEETHORPES	529925.58	409323.67	1992		49816	1 Urbis LED	Ampera 48 LED 700mA	104 Watts	10.00 Metres	Galvanised Steel	
Y	44	STREET LIGHTING	GRIMSBY ROAD	CLEETHORPES	529943.05	409301.9	1992		49817	1 Urbis LED	Ampera 48 LED 700mA	104 Watts	10.00 Metres	Galvanised Steel	
Y	45	STREET LIGHTING	GRIMSBY ROAD	CLEETHORPES	529949.63	409266.71	1992		49818	1 Urbis LED	Ampera 48 LED 700mA	104 Watts	10.00 Metres	Galvanised Steel	
Y	46	STREET LIGHTING	GRIMSBY ROAD	CLEETHORPES	529969.88	409240.82	1992		49819	1 Urbis LED	Ampera 48 LED 700mA	104 Watts	10.00 Metres	Galvanised Steel	
Y	47	STREET LIGHTING	GRIMSBY ROAD	CLEETHORPES	530000.26	409228.54	1992		49820	1 Urbis LED	Ampera 48 LED 700mA	104 Watts	10.00 Metres	Galvanised Steel	
Y	48	STREET LIGHTING	GRIMSBY ROAD	CLEETHORPES	530007.48	409192.48	1992		49821	Urbis	AXIA 48 LED 730mA	102 Watts	10.00 Metres	Galvanised Steel	
Y	49	STREET LIGHTING	GRIMSBY ROAD	CLEETHORPES	530039.63	409176.47	1992		49822	1 Urbis LED	Ampera 48 LED 700mA	104 Watts	10.00 Metres	Galvanised Steel	
Y	50	STREET LIGHTING	GRIMSBY ROAD	CLEETHORPES	530051.02	409137.54	1994		49823	1 Urbis LED	Ampera 48 LED 700mA	104 Watts	12.00 Metres	Galvanised Steel	
Y	51	STREET LIGHTING	GRIMSBY ROAD	CLEETHORPES	530071.78	409110.2	1994		49824	1 Urbis LED	Ampera 48 LED 700mA	104 Watts	12.00 Metres	Galvanised Steel	
Y	52	STREET LIGHTING	GRIMSBY ROAD	CLEETHORPES	530126.56	409067.56	2008		66457	1 Urbis LED	Ampera 48 LED 700mA	104 Watts	12.00 Metres	Galvanised Steel	
Y	53	STREET LIGHTING	GRIMSBY ROAD	CLEETHORPES	530126.21	409067.3	2008		49825	1 Urbis LED	Ampera 48 LED 700mA	104 Watts	12.00 Metres	Steel	
Y	54	STREET LIGHTING	GRIMSBY ROAD	CLEETHORPES	530133.17	409032.62	1994		49826	1 Urbis LED	Ampera 48 LED 700mA	104 Watts	12.00 Metres	Galvanised Steel	
Y	55	STREET LIGHTING	GRIMSBY ROAD	CLEETHORPES	530207.89	409027.43	2019	03/10/2019	67383	Urbis	Ampera 48 LED 700mA	104 Watts	12.00 Metres	Galvanised Steel	
Y	56	STREET LIGHTING	GRIMSBY ROAD	CLEETHORPES	530191.27	408985.5	1994		49828	1 Urbis LED	Ampera 48 LED 700mA	104 Watts	12.00 Metres	Galvanised Steel	
Y	1	STREET LIGHTING	ANTHONYS BANK ROAD	FITTIES	533064.78	405956.46	2007		43258	DW Windsor	Lancaster 15 LED	30 Watts	5.00 Metres	Steel	
Y	2	STREET LIGHTING	ANTHONYS BANK ROAD	FITTIES	533084.81	405925.69	2007		43259	DW Windsor	Lancaster 15 LED	30 Watts	5.00 Metres	Steel	
Y	3	STREET LIGHTING	ANTHONYS BANK ROAD	FITTIES	533104.64	405896.74	2007		43260	DW Windsor	Lancaster 15 LED	30 Watts	5.00 Metres	Steel	
Y	4	STREET LIGHTING	ANTHONYS BANK ROAD	FITTIES	533126.35	405863.25	2007		43261	DW Windsor	Lancaster 15 LED	30 Watts	5.00 Metres	Steel	
Y	5	STREET LIGHTING	ANTHONYS BANK ROAD	FITTIES	533143.81	405835.77	2007		43262	DW Windsor	Lancaster 15 LED	30 Watts	5.00 Metres	Steel	
Y	6	STREET LIGHTING	ANTHONYS BANK ROAD	FITTIES	533164.85	405804.82	2007		43263	DW Windsor	Lancaster 15 LED	30 Watts	5.00 Metres	Steel	
Y	7	STREET LIGHTING	ANTHONYS BANK ROAD	FITTIES	533185.71	405772.18	2007		43264	DW Windsor	Lancaster 15 LED	30 Watts	5.00 Metres	Steel	
Y	8	STREET LIGHTING	ANTHONYS BANK ROAD	FITTIES	533206.79	405740.32	2007		43265	DW Windsor	Lancaster 15 LED	30 Watts	5.00 Metres	Steel	
Y	9	STREET LIGHTING	ANTHONYS BANK ROAD	FITTIES	533227.36	405709.29	2007		43266	DW Windsor	Lancaster 15 LED	30 Watts	5.00 Metres	Steel	
Y	10	STREET LIGHTING	ANTHONYS BANK ROAD	FITTIES	533248.34	405677.19	2007		43267	DW Windsor	Lancaster 15 LED	30 Watts	5.00 Metres	Steel	
Y	11	STREET LIGHTING	ANTHONYS BANK ROAD	FITTIES	533269.5	405644.74	2007		43268	DW Windsor	Lancaster 15 LED	30 Watts	5.00 Metres	Steel	
Y	12	STREET LIGHTING	ANTHONYS BANK ROAD	FITTIES	533279.1	405620.41	2008		43269	DW Windsor	Lancaster 15 LED	30 Watts	5.00 Metres	Steel	
Y	13	STREET LIGHTING	ANTHONYS BANK ROAD	FITTIES	533302.91	405595.25	2008		43270	DW Windsor	Lancaster 15 LED	30 Watts	5.00 Metres	Steel	
Y	14	STREET LIGHTING	ANTHONYS BANK ROAD	FITTIES	533317.5	405561.31	2008		43271	DW Windsor	Lancaster 15 LED	30 Watts	5.00 Metres	Steel	
Y	15	STREET LIGHTING	ANTHONYS BANK ROAD	FITTIES	533316.41	405537.4	2008		43272	DW Windsor	Lancaster 15 LED	30 Watts	5.00 Metres	Steel	
Y	16	STREET LIGHTING	ANTHONYS BANK ROAD	FITTIES	533310.02	405517.46	2009		43273	DW Windsor	Lancaster 15 LED	30 Watts	5.00 Metres	Steel	
Y	17	STREET LIGHTING	ANTHONYS BANK ROAD	FITTIES	533302.24	405482.7	2009		43274	DW Windsor	Lancaster 15 LED	30 Watts	5.00 Metres	Steel	
Y	18	STREET LIGHTING	ANTHONYS BANK ROAD	FITTIES	533296.38	405454.95	2009		43275	DW Windsor	Lancaster 15 LED	30 Watts	5.00 Metres	Steel	
Y	19	STREET LIGHTING	ANTHONYS BANK ROAD	FITTIES	533288.42	405417.89	2009		43276	DW Windsor	Lancaster 15 LED	30 Watts	5.00 Metres	Steel	
Y	1	STREET LIGHTING	GRANNIES LANE	CLEETHORPES	530987.97	408437.3	2008		49440	Urbis	Axia 8 LED 350mA	10 Watts	6.00 Metres	Steel	
Y	2	STREET LIGHTING	GRANNIES LANE	CLEETHORPES	530968	408448.37	2008		49441	Urbis	Axia 8 LED 350mA	10 Watts	6.00 Metres	Steel	
Y	3	STREET LIGHTING	GRANNIES LANE	CLEETHORPES	530953.25	408457.73	2008		49442	Urbis	Axia 8 LED 350mA	10 Watts	6.00 Metres	Steel	
Y	1	STREET LIGHTING	GRIMSBY ROAD ACCESS ROADS	CLEETHORPES	528827.11	410110.75	1994		49920	Urbis	Axia 16 LED 350mA	19 Watts	6.00 Metres	Galvanised Steel	
Y	2	STREET LIGHTING	GRIMSBY ROAD ACCESS ROADS	CLEETHORPES	528852.67	410117.38	1994		61636	Thorn		8 Watts	5.00 Metres	Unknown	
Y	3	STREET LIGHTING	GRIMSBY ROAD ACCESS ROADS	CLEETHORPES	528872.44	410089.2	2014	08/05/2014	49921	Urbis	Axia 16 LED 350mA	19 Watts	6.00 Metres	Steel	
Y	4	STREET LIGHTING	GRIMSBY ROAD ACCESS ROADS	CLEETHORPES	528880.52	410104.02	1994		61637	Thorn		8 Watts	5.00 Metres	Unknown	
Y	5	STREET LIGHTING	GRIMSBY ROAD ACCESS ROADS	CLEETHORPES	528912.49	410088.15	1994		61638	Thorn		8 Watts	5.00 Metres	Unknown	
Y	6	STREET LIGHTING	GRIMSBY ROAD ACCESS ROADS	CLEETHORPES	528917.53	410067.24	2014		49922	Urbis	Axia 16 LED 350mA	19 Watts	6.00 Metres	Galvanised Steel	
Y	7	STREET LIGHTING	GRIMSBY ROAD ACCESS ROADS	CLEETHORPES	528953.37	410049.67	2014		49923	Urbis	Axia 16 LED 350mA	19 Watts	6.00 Metres	Galvanised Steel	
Y	1	STREET LIGHTING	SUSSEX RECREATION GROUND FROM	CLEETHORPES	529893.41	408969.77	2015		66439	1 Urbis LED	Axia 16 LED 500mA	28 Watts	6.00 Metres	Galvanised Steel	
Y	2	STREET LIGHTING	SUSSEX RECREATION GROUND FROM	CLEETHORPES	529874.87	408954.81	2015		66440	1 Urbis LED	Axia 16 LED 500mA	28 Watts	6.00 Metres	Galvanised Steel	
Y	3	STREET LIGHTING	SUSSEX RECREATION GROUND FROM	CLEETHORPES	529877.58	408932.21	2015		66441	1 Urbis LED	Axia 16 LED 500mA	28 Watts	6.00 Metres	Galvanised Steel	
Y	4	STREET LIGHTING	SUSSEX RECREATION GROUND FROM	CLEETHORPES	529890.12	408916.17	2015		66447	1 Urbis LED	Teceo 96 LED 500mA	104 Watts	10.00 Metres	Galvanised Steel	
Y	5	STREET LIGHTING	SUSSEX RECREATION GROUND FROM	CLEETHORPES	529909.72	408890.66	2015		66442	1 Urbis LED	Axia 16 LED 500mA	28 Watts	6.00 Metres	Galvanised Steel	
Y	6	STREET LIGHTING	SUSSEX RECREATION GROUND FROM	CLEETHORPES	529940.15	408901.06	2015		66448	1 Urbis LED	Axia 16 LED 500mA	28 Watts	6.00 Metres	Galvanised Steel	
Y	7	STREET LIGHTING	SUSSEX RECREATION GROUND FROM	CLEETHORPES	529925.68	408871.28	2015		66443	1 Urbis LED	Axia 16 LED 500mA	28 Watts	6.00 Metres	Galvanised Steel	
Y	8	STREET LIGHTING	SUSSEX RECREATION GROUND FROM	CLEETHORPES	529941.43	408849.97	2015		66444	1 Urbis LED	Axia 16 LED 500mA	28 Watts	6.00 Metres	Galvanised Steel	
Y	9	STREET LIGHTING	SUSSEX RECREATION GROUND FROM	CLEETHORPES	529964.31	408831.87	2015		66445	1 Urbis LED	Axia 16 LED 500mA	28 Watts	6.00 Metres	Galvanised Steel	
Y	10	STREET LIGHTING	SUSSEX RECREATION GROUND FROM	CLEETHORPES	529988.61	408846.91	2015		66446	1 Urbis LED	Axia 16 LED 500mA	28 Watts	6.00 Metres	Galvanised Steel	
Y	1	STREET LIGHTING	CONSTITUTIONAL AVENUE	CLEETHORPES	529417.49	409799.21	2011		46575	1 Urbis LED	Teceo 24 LED 500mA	40 Watts	6.00 Metres	Steel	
Y	2	STREET LIGHTING	CONSTITUTIONAL AVENUE	CLEETHORPES	529440.11	409820.91	2011		46576	1 Urbis LED	Teceo 24 LED 500mA	40 Watts	6.00 Metres	Steel	
Y	3	STREET LIGHTING	CONSTITUTIONAL AVENUE	CLEETHORPES	529442.67	409850.77	2011		46577	1 Urbis LED	Teceo 24 LED 500mA	40 Watts	6.00 Metres	Steel	
Y	4	STREET LIGHTING	CONSTITUTIONAL AVENUE	CLEETHORPES	529465.07	409871.35	2011		46578	1 Urbis LED	Teceo 24 LED 500mA	40 Watts	6.00 Metres	Steel	
Y	1	STREET LIGHTING	BENNETT ROAD	CLEETHORPES	529906.02	409379	2013	04/06/2013	44049	1 Urbis LED	Teceo 24 LED 500mA	40 Watts	6.00 Metres	Galvanised Steel	
Y	2	STREET LIGHTING	BENNETT ROAD	CLEETHORPES	529941.72	409397.8	2016	07/09/2016	44050	1 Urbis LED	Teceo 24 LED 500mA	40 Watts	6.00 Metres	Galvanised Steel	
Y	3	STREET LIGHTING	BENNETT ROAD	CLEETHORPES	529968.05	409428.3	2016	07/09/2016	44051	1 Urbis LED	Teceo 24 LED 500mA	40 Watts	6.00 Metres	Galvanised Steel	
Y	1	STREET LIGHTING	CAMPDEN CRESCENT	CLEETHORPES	529599.75	409334.51	1990		45186	Urbis	Axia 16 LED 350mA	19 Watts	5.00 Metres	Galvanised Steel	
Y	2	STREET LIGHTING	CAMPDEN CRESCENT	CLEETHORPES	529572.92	409324.19	1990		45187	Urbis	Axia 16 LED 350mA	19 Watts	5.00 Metres	Galvanised Steel	
Y	3	STREET LIGHTING	CAMPDEN CRESCENT	CLEETHORPES	529549.5	409304.13	1990		45188	Urbis	Axia 16 LED 350mA	19 Watts	5.00 Metres	Galvanised Steel	
Y	4	STREET LIGHTING	CAMPDEN CRESCENT	CLEETHORPES	529539.12	409277.3	1990		45189	Urbis	Axia 16 LED 350mA	19 Watts	5.00 Metres	Galvanised Steel	
Y	5	STREET LIGHTING	CAMPDEN CRESCENT	CLEETHORPES	529540.51	409251.41	1990		45190	Urbis	Axia 16 LED 350mA	19 Watts	5.00 Metres	Galvanised Steel	
Y	6	STREET LIGHTING	CAMPDEN CRESCENT	CLEETHORPES	529557.09	409224.2	1990		45191	Urbis	Axia 16 LED 350mA	19 Watts	5.00 Metres	Galvanised Steel	
Y	7	STREET LIGHTING	CAMPDEN CRESCENT	CLEETHORPES	529584.69	409207.55	1990		45192	Urbis	Axia 16 LED 350mA	19 Watts	5.00 Metres	Galvanised Steel	
Y	8	STREET LIGHTING	CAMPDEN CRESCENT	CLEETHORPES	529596.84	409179.01	1990		45193	Urbis	Axia 16 LED 350mA	19 Watts	5.00 Metres	Galvanised Steel	
Y	9	STREET LIGHTING	CAMPDEN CRESCENT	CLEETHORPES	529624.18	409165.27	1990		45194	Urbis	Axia 16 LED 350mA	19 Watts	5.00 Metres	Galvanised Steel	
Y	10	STREET LIGHTING	CAMPDEN CRESCENT	CLEETHORPES	529638.48	409130.9	1990		45195	Urbis	Axia 16 LED 350mA	19 Watts	5.00 Metres	Galvanised Steel	
Y	11	STREET LIGHTING	CAMPDEN CRESCENT	CLEETHORPES	529662.15	409115.27	1990		45196	Urbis	Axia 16 LED 350mA	19 Watts	5.00 Metres	Galvanised Steel	
Y	12	STREET LIGHTING	CAMPDEN CRESCENT	CLEETHORPES	529681.52	409087.3	1990		45197	Urbis	Axia 16 LED 350mA	19 Watts	5.00 Metres	Galvanised Steel	
Y	13	STREET LIGHTING	CAMPDEN CRESCENT	CLEETHORPES	529692.02	409055.84	1990		45198	Urbis	Axia 16 LED 350mA	19 Watts	5.00 Metres	Galvanised Steel	
Y	14	STREET LIGHTING	CAMPDEN CRESCENT	CLEETHORPES	529710.63	409033.31	1990		45199	Urbis	Axia 16 LED 350mA	19 Watts	5.00 Metres	Galvanised Steel	
Y	15	STREET LIGHTING	CAMPDEN CRESCENT	CLEETHORPES	529738.1	409021.41	1990		45200	Urbis	Axia 16 LED 350mA	19 Watts	5.00 Metres	Galvanised Steel	
Y	16	STREET LIGHTING	CAMPDEN CRESCENT	CLEETHORPES	529769.99	409025.02	1990		45201	Urbis	Axia 16 LED 350mA	19 Watts	5.00 Metres	Galvanised Steel	
Y	17	STREET LIGHTING	CAMPDEN CRESCENT	CLEETHORPES	529792.52	409040.33	1990		45202	Urbis	Axia 16 LED 350mA	19 Watts	5.00 Metres	Galvanised Steel	
Y	18	STREET LIGHTING	CAMPDEN CRESCENT	CLEETHORPES	529816.8	409059.89	1990		45203	Urbis	Axia 16 LED 350mA	19 Watts	5.00 Metres	Galvanised Steel	
Y	1	STREET LIGHTING	CHAPMAN ROAD	CLEETHORPES	529857.67	409423.37	1994		45623	Urbis	Axia 16 LED 350mA	19 Watts	6.00 Metres	Galvanised Steel	
Y	2	STREET LIGHTING	CHAPMAN ROAD	CLEETHORPES	529883.87	409430.39	1994		45624	Urbis	Axia 16 LED 350mA	19 Watts	6.00 Metres	Galvanised Steel	
Y	3	STREET LIGHTING	CHAPMAN ROAD	CLEETHORPES	529897.03	409454.38	1994		45625	Urbis	Axia 16 LED 350mA	19 Watts	6.00 Metres	Galvanised Steel	

Y	4	STREET LIGHTING	CHAPMAN ROAD	CLEETHORPES	529925.13	409463.17	1994		45626	Urbis	Axia 16 LED 350mA	19 Watts	6.00 Metres	Galvanised Steel	
Y	5	STREET LIGHTING	CHAPMAN ROAD	CLEETHORPES	529934.12	409483.49	1994		45627	Urbis	Axia 16 LED 350mA	19 Watts	6.00 Metres	Galvanised Steel	
Y	1	STREET LIGHTING	CONYARD ROAD	CLEETHORPES	530120.15	409096.41	2012		46621	1 Urbis LED	Teceo 32 LED 500mA	52 Watts	6.00 Metres	Steel	
Y	1	STREET LIGHTING	CRAMPIN ROAD	CLEETHORPES	530004.91	409305.87	2016	30/06/2016	66508	Urbis	Axia 16 LED 350mA	19 Watts	6.00 Metres	Galvanised Steel	
Y	2	STREET LIGHTING	CRAMPIN ROAD	CLEETHORPES	530015.44	409289.91	2016	30/06/2016	46859	Urbis	Axia 16 LED 350mA	19 Watts	6.00 Metres	Galvanised Steel	
Y	3	STREET LIGHTING	CRAMPIN ROAD	CLEETHORPES	530027.93	409276.51	2016	30/06/2016	66509	Urbis	Axia 16 LED 350mA	19 Watts	6.00 Metres	Galvanised Steel	
Y	1	STREET LIGHTING	FISHER PLACE	CLEETHORPES	529757.76	409128.76	2011	23/09/2011	48614	1 Urbis LED	Teceo 32 LED 500mA	28 Watts	6.00 Metres	Galvanised Steel	
Y	2	STREET LIGHTING	FISHER PLACE	CLEETHORPES	529728.21	409107.71	2018	18/05/2018	48615	1 Urbis LED	Teceo 32 LED 500mA	28 Watts	6.00 Metres	Galvanised Steel	
Y	1	STREET LIGHTING	FRANKLAND PLACE	CLEETHORPES	529631.96	409364.59	2018	04/05/2018	48924	1 Urbis LED	Teceo 24 LED 500mA	40 Watts	6.00 Metres	Galvanised Steel	
Y	2	STREET LIGHTING	FRANKLAND PLACE	CLEETHORPES	529651.71	409391.51	2018	04/05/2018	48925	1 Urbis LED	Teceo 24 LED 500mA	40 Watts	6.00 Metres	Galvanised Steel	
Y	1	STREET LIGHTING	GORING PLACE	CLEETHORPES	529843.61	409081.66	2002		49379	Urbis	Axia 16 LED 350mA	19 Watts	5.00 Metres	Stainless Steel	
Y	2	STREET LIGHTING	GORING PLACE	CLEETHORPES	529868	409092	2002		49380	Urbis	Axia 16 LED 350mA	19 Watts	5.00 Metres	Stainless Steel	
Y	3	STREET LIGHTING	GORING PLACE	CLEETHORPES	529876.86	409112.43	2002		49381	Urbis	Axia 16 LED 350mA	19 Watts	5.00 Metres	Stainless Steel	
Y	1	STREET LIGHTING	HUTCHINSON ROAD	CLEETHORPES	530010.18	409347.77	2007		51245	Urbis	Axia 16 LED 350mA	19 Watts	5.00 Metres	Steel	
Y	2	STREET LIGHTING	HUTCHINSON ROAD	CLEETHORPES	530001.41	409374.95	2007		51246	Urbis	Axia 16 LED 350mA	19 Watts	5.00 Metres	Steel	
Y	3	STREET LIGHTING	HUTCHINSON ROAD	CLEETHORPES	529977.72	409385.67	2007		51247	Urbis	Axia 16 LED 350mA	19 Watts	5.00 Metres	Steel	
Y	1	STREET LIGHTING	MACHRAY PLACE	CLEETHORPES	529995.14	409191.49	1997		53064	Urbis	Axia 16 LED 350mA	19 Watts	5.00 Metres	Galvanised Steel	
Y	2	STREET LIGHTING	MACHRAY PLACE	CLEETHORPES	529972.11	409173.58	1997		53065	Urbis	Axia 16 LED 350mA	19 Watts	5.00 Metres	Galvanised Steel	
Y	3	STREET LIGHTING	MACHRAY PLACE	CLEETHORPES	529962.36	409160.73	1997		53066	Urbis	Axia 16 LED 350mA	19 Watts	5.00 Metres	Galvanised Steel	
Y	4	STREET LIGHTING	MACHRAY PLACE	CLEETHORPES	529946.28	409174.43	1997		53067	Urbis	Axia 16 LED 350mA	19 Watts	5.00 Metres	Galvanised Steel	
Y	1	STREET LIGHTING	NEPTUNE STREET	CLEETHORPES	530400.47	409195.23	2001		53992	1 Urbis LED	Axia 16 LED 500mA	28 Watts	6.00 Metres	Galvanised Steel	
Y	2	STREET LIGHTING	NEPTUNE STREET	CLEETHORPES	530368.04	409221.04	1992		53993	1 Urbis LED	Axia 16 LED 500mA	28 Watts	5.00 Metres	Galvanised Steel	
Y	3	STREET LIGHTING	NEPTUNE STREET	CLEETHORPES	530355.76	409249.96	2023	14/02/2023	69198	Urbis	Axia 24 LED 500mA	28 Watts	6.00 Metres	Galvanised Steel	
Y	4	STREET LIGHTING	NEPTUNE STREET	CLEETHORPES	530339.99	409269.17	2006		53995	1 Urbis LED	Axia 16 LED 500mA	28 Watts	6.00 Metres	Stainless Steel	
Y	5	STREET LIGHTING	NEPTUNE STREET	CLEETHORPES	530324.2	409289.17	2006		53996	1 Urbis LED	Axia 16 LED 500mA	28 Watts	6.00 Metres	Stainless Steel	
Y	6	STREET LIGHTING	NEPTUNE STREET	CLEETHORPES	530296.98	409305.94	2014		53997	1 Urbis LED	Axia 16 LED 500mA	28 Watts	6.00 Metres	Galvanised Steel	
Y	8	STREET LIGHTING	NEPTUNE STREET	CLEETHORPES	530257.23	409355.81	2015	30/07/2015	53999	1 Urbis LED	Axia 16 LED 500mA	28 Watts	6.00 Metres	Galvanised Steel	
Y	1	STREET LIGHTING	NORFOLK LANE	CLEETHORPES	530464.89	409243.16	1990		54192	1 Urbis LED	Teceo 24 LED 500mA	40 Watts	8.00 Metres	Galvanised Steel	
Y	2	STREET LIGHTING	NORFOLK LANE	CLEETHORPES	530452.87	409258.17	1990		54193	1 Urbis LED	axia 3.1 16 LED 620mA	32 Watts	8.00 Metres	Galvanised Steel	
Y	3	STREET LIGHTING	NORFOLK LANE	CLEETHORPES	530435.78	409279.24	1990		54194	1 Urbis LED	Teceo 24 LED 500mA	40 Watts	8.00 Metres	Galvanised Steel	
Y	4	STREET LIGHTING	NORFOLK LANE	CLEETHORPES	530418.31	409300.57	1990		54195	1 Urbis LED	Teceo 24 LED 500mA	40 Watts	8.00 Metres	Galvanised Steel	
Y	1	STREET LIGHTING	NORTH PROMENADE	CLEETHORPES	530730.23	408986.09	1995		61820	GoodLight	30 LED Bulb	30 Watts	8.00 Metres	Steel	
Y	1	STREET LIGHTING	NORTH PROMENADE	CLEETHORPES	530730.23	408986.09	1995		62352	GoodLight	30 LED Bulb	30 Watts	8.00 Metres	Steel	
Y	2	STREET LIGHTING	NORTH PROMENADE	CLEETHORPES	530720.61	408999.81	1995		61821	GoodLight	30 LED Bulb	30 Watts	6.00 Metres	Steel	
Y	2	STREET LIGHTING	NORTH PROMENADE	CLEETHORPES	530720.61	408999.81	1995		62353	GoodLight	30 LED Bulb	30 Watts	6.00 Metres	Steel	
Y	3	STREET LIGHTING	NORTH PROMENADE	CLEETHORPES	530712.94	409012.26	1995		61822	GoodLight	30 LED Bulb	30 Watts	6.00 Metres	Steel	
Y	3	STREET LIGHTING	NORTH PROMENADE	CLEETHORPES	530712.94	409012.26	1995		62354	GoodLight	30 LED Bulb	30 Watts	6.00 Metres	Steel	
Y	4	STREET LIGHTING	NORTH PROMENADE	CLEETHORPES	530703.07	409027.83	1995		61823	GoodLight	30 LED Bulb	30 Watts	6.00 Metres	Steel	
Y	4	STREET LIGHTING	NORTH PROMENADE	CLEETHORPES	530703.07	409027.83	1995		62355	GoodLight	30 LED Bulb	30 Watts	6.00 Metres	Steel	
Y	5	STREET LIGHTING	NORTH PROMENADE	CLEETHORPES	530692.66	409045.29	1995		61824	GoodLight	30 LED Bulb	30 Watts	6.00 Metres	Steel	
Y	5	STREET LIGHTING	NORTH PROMENADE	CLEETHORPES	530692.66	409045.29	1995		62356	GoodLight	30 LED Bulb	30 Watts	6.00 Metres	Steel	
Y	6	STREET LIGHTING	NORTH PROMENADE	CLEETHORPES	530682.18	409062.57	1995		61825	GoodLight	30 LED Bulb	30 Watts	6.00 Metres	Steel	
Y	6	STREET LIGHTING	NORTH PROMENADE	CLEETHORPES	530682.18	409062.57	1995		62357	GoodLight	30 LED Bulb	30 Watts	6.00 Metres	Steel	
Y	7	STREET LIGHTING	NORTH PROMENADE	CLEETHORPES	530667.91	409066.63	1995		61826	Urbis	Axia 8 LED 350mA	10 Watts	6.00 Metres	Steel	
Y	8	STREET LIGHTING	NORTH PROMENADE	CLEETHORPES	530672.67	409078.48	1995		61827	GoodLight	30 LED Bulb	30 Watts	6.00 Metres	Steel	
Y	8	STREET LIGHTING	NORTH PROMENADE	CLEETHORPES	530672.67	409078.48	1995		62359	GoodLight	30 LED Bulb	30 Watts	6.00 Metres	Steel	
Y	9	STREET LIGHTING	NORTH PROMENADE	CLEETHORPES	530661.33	409096.61	1995		61828	GoodLight	30 LED Bulb	30 Watts	6.00 Metres	Steel	
Y	9	STREET LIGHTING	NORTH PROMENADE	CLEETHORPES	530661.33	409096.61	1995		62360	GoodLight	30 LED Bulb	30 Watts	6.00 Metres	Steel	
Y	10	STREET LIGHTING	NORTH PROMENADE	CLEETHORPES	530651	409113.93	1995		61829	GoodLight	30 LED Bulb	30 Watts	6.00 Metres	Steel	
Y	10	STREET LIGHTING	NORTH PROMENADE	CLEETHORPES	530651	409113.93	1995		62361	GoodLight	30 LED Bulb	30 Watts	6.00 Metres	Steel	
Y	11	STREET LIGHTING	NORTH PROMENADE	CLEETHORPES	530640.88	409130.94	1995		61830	GoodLight	30 LED Bulb	30 Watts	6.00 Metres	Steel	
Y	11	STREET LIGHTING	NORTH PROMENADE	CLEETHORPES	530640.88	409130.94	1995		62362	GoodLight	30 LED Bulb	30 Watts	6.00 Metres	Steel	
Y	12	STREET LIGHTING	NORTH PROMENADE	CLEETHORPES	530640.47	409136.54	1995		61831	GoodLight	30 LED Bulb	30 Watts	6.00 Metres	Steel	
Y	12	STREET LIGHTING	NORTH PROMENADE	CLEETHORPES	530640.47	409136.54	1995		62363	GoodLight	30 LED Bulb	30 Watts	6.00 Metres	Steel	
Y	13	STREET LIGHTING	NORTH PROMENADE	CLEETHORPES	530633.28	409148.6	1995		61832	GoodLight	30 LED Bulb	30 Watts	6.00 Metres	Steel	
Y	13	STREET LIGHTING	NORTH PROMENADE	CLEETHORPES	530633.28	409148.6	1995		62364	GoodLight	30 LED Bulb	30 Watts	6.00 Metres	Steel	
Y	14	STREET LIGHTING	NORTH PROMENADE	CLEETHORPES	530623.16	409165.36	1995		61833	GoodLight	30 LED Bulb	30 Watts	6.00 Metres	Steel	
Y	14	STREET LIGHTING	NORTH PROMENADE	CLEETHORPES	530623.16	409165.36	1995		62365	GoodLight	30 LED Bulb	30 Watts	6.00 Metres	Steel	
Y	15	STREET LIGHTING	NORTH PROMENADE	CLEETHORPES	530599.77	409172.75	1995		61834	Urbis	Axia 8 LED 350mA	10 Watts	6.00 Metres	Steel	
Y	16	STREET LIGHTING	NORTH PROMENADE	CLEETHORPES	530614.95	409178.28	1995		61835	GoodLight	30 LED Bulb	30 Watts	6.00 Metres	Steel	
Y	16	STREET LIGHTING	NORTH PROMENADE	CLEETHORPES	530614.95	409178.28	1995		62367	GoodLight	30 LED Bulb	30 Watts	6.00 Metres	Steel	
Y	17	STREET LIGHTING	NORTH PROMENADE	CLEETHORPES	530604.85	409187.28	1995		61836	Urbis	Axia 8 LED 350mA	10 Watts	6.00 Metres	Steel	
Y	18	STREET LIGHTING	NORTH PROMENADE	CLEETHORPES	530606.37	409192.14	1995		61837	GoodLight	30 LED Bulb	30 Watts	6.00 Metres	Steel	
Y	18	STREET LIGHTING	NORTH PROMENADE	CLEETHORPES	530606.37	409192.14	1995		62369	GoodLight	30 LED Bulb	30 Watts	6.00 Metres	Steel	
Y	19	STREET LIGHTING	NORTH PROMENADE	CLEETHORPES	530598.7	409203.8	1995		61838	GoodLight	30 LED Bulb	30 Watts	6.00 Metres	Steel	
Y	19	STREET LIGHTING	NORTH PROMENADE	CLEETHORPES	530598.7	409203.8	1995		62370	GoodLight	30 LED Bulb	30 Watts	6.00 Metres	Steel	
Y	20	STREET LIGHTING	NORTH PROMENADE	CLEETHORPES	530589.51	409218.49	1995		61839	GoodLight	30 LED Bulb	30 Watts	6.00 Metres	Steel	
Y	20	STREET LIGHTING	NORTH PROMENADE	CLEETHORPES	530589.51	409218.49	1995		62371	GoodLight	30 LED Bulb	30 Watts	6.00 Metres	Steel	
Y	21	STREET LIGHTING	NORTH PROMENADE	CLEETHORPES	530579.11	409234.78	1995		61840	GoodLight	30 LED Bulb	30 Watts	6.00 Metres	Steel	
Y	21	STREET LIGHTING	NORTH PROMENADE	CLEETHORPES	530579.11	409234.78	1995		62372	GoodLight	30 LED Bulb	30 Watts	6.00 Metres	Steel	
Y	22	STREET LIGHTING	NORTH PROMENADE	CLEETHORPES	530570.91	409247.09	1995		61841	GoodLight	30 LED Bulb	30 Watts	6.00 Metres	Steel	
Y	22	STREET LIGHTING	NORTH PROMENADE	CLEETHORPES	530570.91	409247.09	1995		62373	GoodLight	30 LED Bulb	30 Watts	6.00 Metres	Steel	
Y	23	STREET LIGHTING	NORTH PROMENADE	CLEETHORPES	530564.98	409249.22	1995		61842	GoodLight	30 LED Bulb	30 Watts	6.00 Metres	Steel	
Y	23	STREET LIGHTING	NORTH PROMENADE	CLEETHORPES	530564.98	409249.22	1995		62374	GoodLight	30 LED Bulb	30 Watts	6.00 Metres	Steel	
Y	24	STREET LIGHTING	NORTH PROMENADE	CLEETHORPES	530555.44	409264.34	1995		61843	GoodLight	30 LED Bulb	30 Watts	6.00 Metres	Steel	
Y	24	STREET LIGHTING	NORTH PROMENADE	CLEETHORPES	530555.44	409264.34	1995		62375	GoodLight	30 LED Bulb	30 Watts	6.00 Metres	Steel	
Y	25	STREET LIGHTING	NORTH PROMENADE	CLEETHORPES	530544.81	409280.36	1995		61844	GoodLight	30 LED Bulb	30 Watts	6.00 Metres	Steel	
Y	25	STREET LIGHTING	NORTH PROMENADE	CLEETHORPES	530544.81	409280.36	1995		62376	GoodLight	30 LED Bulb	30 Watts	6.00 Metres	Steel	
Y	26	STREET LIGHTING	NORTH PROMENADE	CLEETHORPES	530534.43	409297.13	1995		61845	GoodLight	30 LED Bulb	30 Watts	6.00 Metres	Steel	
Y	26	STREET LIGHTING	NORTH PROMENADE	CLEETHORPES	530534.43	409297.13	1995		62377	GoodLight	30 LED Bulb	30 Watts	6.00 Metres	Steel	
Y	27	STREET LIGHTING	NORTH PROMENADE	CLEETHORPES	530525.37	409295.6	1995		61846	Urbis	Axia 8 LED 350mA	10 Watts	6.00 Metres	Steel	
Y	28	STREET LIGHTING	NORTH PROMENADE	CLEETHORPES	530529.11	409305.55	1995		61847	Urbis	Axia 8 LED 350mA	10 Watts	6.00 Metres	Steel	
Y	29	STREET LIGHTING	NORTH PROMENADE	CLEETHORPES	530517.72	409322.07	1995		61848	GoodLight	30 LED Bulb	30 Watts	6.00 Metres	Steel	
Y	29	STREET LIGHTING	NORTH PROMENADE	CLEETHORPES	530517.72	409322.07	1995		62380	GoodLight	30 LED Bulb	30 Watts	6.00 Metres	Steel	
Y	30	STREET LIGHTING	NORTH PROMENADE	CLEETHORPES	530506.28	409338.23	1995		61849	GoodLight	30 LED Bulb	30 Watts	6.00 Metres	Steel	
Y	30	STREET LIGHTING	NORTH PROMENADE	CLEETHORPES	530506.28	409338.23	1995		62381	GoodLight	30 LED Bulb	30 Watts	6.00 Metres	Steel	
Y	31	STREET LIGHTING	NORTH PROMENADE	CLEETHORPES	530494.2	409354.14	1995		61850	GoodLight	30 LED Bulb	30 Watts	6.00 Metres	Steel	
Y	31	STREET LIGHTING	NORTH PROMENADE	CLEETHORPES	530494.2	409354.14	1995		62382	GoodLight	30 LED Bulb	30 Watts	6.00 Metres	Steel	
Y	32	STREET LIGHTING	NORTH PROMENADE	CLEETHORPES	530482.5	409370.32	1995		61851	GoodLight	30 LED Bulb	30 Watts	6.00 Metres	Steel	
Y	32	STREET LIGHTING	NORTH PROMENADE	CLEETHORPES	530482.5	409370.32	1995		62383	GoodLight	30 LED Bulb	30 Watts	6.00 Metres	Steel	
Y	33	STREET LIGHTING	NORTH PROMENADE	CLEETHORPES	530470.96	409385.13	1995		61852	GoodLight	30 LED Bulb	30 Watts	6.00 Metres	Steel	
Y	33	STREET LIGHTING	NORTH PROMENADE	CLEETHORPES	530470.96	409385.13	1995		62384	GoodLight	30 LED Bulb	30 Watts	6.00 Metres	Steel	
Y	34	STREET LIGHTING	NORTH PROMENADE	CLEETHORPES	530452.77	409390.58	1995		61853	Urbis	Axia 8 LED 350mA	10 Watts	6.00 Metres	Steel	
Y	35	STREET LIGHTING	NORTH PROMENADE	CLEETHORPES	530456.2	409401.93	1995		61854	GoodLight	30 LED Bulb	30 Watts	6.00 Metres	Steel	
Y	35	STREET LIGHTING	NORTH PROMENADE	CLEETHORPES	530456.2	409401.93	1995		62386	GoodLight	30 LED Bulb	30 Watts	6.00 Metres	Steel	
Y	36	STREET LIGHTING	NORTH PROMENADE	CLEETHORPES	530445.14	409415.36	1995		61855	GoodLight	30 LED Bulb	30 Watts	6.00 Metres	Steel	
Y	36	STREET LIGHTING	NORTH PROMENADE	CLEETHORPES	530445.14	409415.36	1995		62387	GoodLight	30 LED Bulb	30 Watts	6.00 Metres	Steel	
Y	37	STREET LIGHTING	NORTH PROMENADE	CLEETHORPES	530434.96	409434.73	1995		61856	GoodLight	30 LED Bulb	30 Watts	6.00 Metres	Steel	
Y	37	STREET LIGHTING	NORTH PROMENADE	CLEETHORPES	530434.96	409434.73	1995		62388	GoodLight	30 LED Bulb	30 Watts	6.00 Metres	Steel	
Y	38	STREET LIGHTING	NORTH PROMENADE	CLEETHORPES	530423.72	409449.65	1995		61857	GoodLight	30 LED Bulb	30 Watts	6.00 Metres	Steel	
Y	38	STREET LIGHTING	NORTH PROMENADE	CLEETHORPES	530423.72	409449.65	1995		62389	GoodLight	30 LED Bulb	30 Watts	6.00 Metres	Steel	
Y	39	STREET LIGHTING	NORTH PROMENADE	CLEETHORPES	530410.89	409466.13	1995		61858	GoodLight	30 LED Bulb	30 Watts	6.00 Metres	Steel	
Y	39	STREET LIGHTING	NORTH PROMENADE	CLEETHORPES	530410.89	409466.13	1995		62390	GoodLight	30 LED Bulb	30 Watts	6.00 Metres	Steel	
Y	40	STREET LIGHTING	NORTH PROMENADE	CLEETHORPES	530396.44	409485.29	1995		61859	GoodLight	30 LED Bulb	30 Watts	6.00 Metres	Steel	
Y	40	STREET LIGHTING	NORTH PROMENADE	CLEETHORPES	530396.44	409485.29	1995		62391	GoodLight	30 LED Bulb	30 Watts	6.00 Metres	Steel	
Y	41	STREET LIGHTING	NORTH PROMENADE	CLEETHORPES	530381.71	409481.68	1995		61860	Urbis	Axia 8 LED 350mA	10 Watts	6.00 Metres	Steel	
Y	42	STREET LIGHTING	NORTH PROMENADE	CLEETHORPES	530387.1	409496.94	1995		61862	GoodLight	30 LED Bulb	30 Watts	6.00 Metres	Steel	
Y	42	STREET LIGHTING	NORTH PROMENADE	CLEETHORPES	530387.1	409496.94	1995		62394	Urbis		30 Watts	6.00 Metres	Steel	
Y	43	STREET LIGHTING	NORTH PROMENADE	CLEETHORPES	530382.77	409494.44	1995		61861	Urbis	Axia 8 LED 350mA	10 Watts	6.00 Metres	Steel	
Y	44	STREET LIGHTING	NORTH PROMENADE	CLEETHORPES	530376.32	409512.1	1995		61863	GoodLight	30 LED Bulb	30 Watts	6.00 Metres	Steel	

Y	44	STREET LIGHTING	NORTH PROMENADE	CLEETHORPES	530376.32	409512.1	1995		62395	GoodLight	30 LED Bulb	30 Watts	6.00 Metres	Steel	
Y	45	STREET LIGHTING	NORTH PROMENADE	CLEETHORPES	530364.16	409527.82	1995		61864	GoodLight	30 LED Bulb	30 Watts	6.00 Metres	Steel	
Y	45	STREET LIGHTING	NORTH PROMENADE	CLEETHORPES	530364.16	409527.82	1995		62396	GoodLight	30 LED Bulb	30 Watts	6.00 Metres	Steel	
Y	46	STREET LIGHTING	NORTH PROMENADE	CLEETHORPES	530352.01	409543.73	1995		61865	GoodLight	30 LED Bulb	30 Watts	6.00 Metres	Steel	
Y	46	STREET LIGHTING	NORTH PROMENADE	CLEETHORPES	530352.01	409543.73	1995		62397	GoodLight	30 LED Bulb	30 Watts	6.00 Metres	Steel	
Y	47	STREET LIGHTING	NORTH PROMENADE	CLEETHORPES	530341	409558.01	1995		61866	GoodLight	30 LED Bulb	30 Watts	6.00 Metres	Steel	
Y	47	STREET LIGHTING	NORTH PROMENADE	CLEETHORPES	530341	409558.01	1995		62398	GoodLight	30 LED Bulb	30 Watts	6.00 Metres	Steel	
Y	48	STREET LIGHTING	NORTH PROMENADE	CLEETHORPES	530329.91	409549.58	1995		61867	Urbis	Axia 8 LED 350mA	10 Watts	6.00 Metres	Steel	
Y	49	STREET LIGHTING	NORTH PROMENADE	CLEETHORPES	530333.52	409560.58	1995		61868	Urbis	Axia 8 LED 350mA	10 Watts	6.00 Metres	Steel	
Y	50	STREET LIGHTING	NORTH PROMENADE	CLEETHORPES	530321.89	409576.44	1995		61869	GoodLight	30 LED Bulb	30 Watts	6.00 Metres	Steel	
Y	50	STREET LIGHTING	NORTH PROMENADE	CLEETHORPES	530321.89	409576.44	1995		62401	GoodLight	30 LED Bulb	30 Watts	6.00 Metres	Steel	
Y	51	STREET LIGHTING	NORTH PROMENADE	CLEETHORPES	530302.65	409584.14	1995		61870	GoodLight	30 LED Bulb	30 Watts	6.00 Metres	Steel	
Y	51	STREET LIGHTING	NORTH PROMENADE	CLEETHORPES	530302.65	409584.14	1995		62402	GoodLight	30 LED Bulb	30 Watts	6.00 Metres	Steel	
Y	52	STREET LIGHTING	NORTH PROMENADE	CLEETHORPES	530288.88	409602.69	1995		61871	GoodLight	30 LED Bulb	30 Watts	6.00 Metres	Steel	
Y	52	STREET LIGHTING	NORTH PROMENADE	CLEETHORPES	530288.88	409602.69	1995		62403	GoodLight	30 LED Bulb	30 Watts	6.00 Metres	Steel	
Y	53	STREET LIGHTING	NORTH PROMENADE	CLEETHORPES	530274.4	409621.04	1995		61872	GoodLight	30 LED Bulb	30 Watts	6.00 Metres	Steel	
Y	53	STREET LIGHTING	NORTH PROMENADE	CLEETHORPES	530274.4	409621.04	1995		62404	GoodLight	30 LED Bulb	30 Watts	6.00 Metres	Steel	
Y	54	STREET LIGHTING	NORTH PROMENADE	CLEETHORPES	530250.99	409632.56	2022	13/05/2022	61873	GoodLight	30 LED Bulb	30 Watts	8.00 Metres	Galvanised Steel	
Y	54	STREET LIGHTING	NORTH PROMENADE	CLEETHORPES	530250.99	409632.56	2022		62405	GoodLight	30 LED Bulb	30 Watts	8.00 Metres	Galvanised Steel	
Y	55	STREET LIGHTING	NORTH PROMENADE	CLEETHORPES	530256.72	409651.42	1995		61874	GoodLight	30 LED Bulb	30 Watts	6.00 Metres	Steel	
Y	55	STREET LIGHTING	NORTH PROMENADE	CLEETHORPES	530256.72	409651.42	1995		62406	GoodLight	30 LED Bulb	30 Watts	6.00 Metres	Steel	
Y	1	STREET LIGHTING	PARRIS PLACE	CLEETHORPES	529818.09	409306.94	2011		54732	1 Urbis LED	Axia 16 LED 500mA	28 Watts	6.00 Metres	Steel	
Y	2	STREET LIGHTING	PARRIS PLACE	CLEETHORPES	529801.13	409339.54	2015	30/07/2015	54733	1 Urbis LED	Axia 16 LED 500mA	28 Watts	6.00 Metres	Galvanised Steel	
Y	3	STREET LIGHTING	PARRIS PLACE	CLEETHORPES	529774.55	409358.18	2015	30/07/2015	54734	1 Urbis LED	Axia 16 LED 500mA	28 Watts	6.00 Metres	Galvanised Steel	
Y	1	STREET LIGHTING	PELHAM SQUARE	CLEETHORPES	530055.21	409392.46	1997		55251	1 Urbis LED	Axia 16 LED 500mA	28 Watts	5.00 Metres	Galvanised Steel	
Y	2	STREET LIGHTING	PELHAM SQUARE	CLEETHORPES	530032.18	409428.6	2016	30/06/2016	55252	1 Urbis LED	Axia 16 LED 500mA	28 Watts	6.00 Metres	Galvanised Steel	
Y	1	STREET LIGHTING	PENDRETH PLACE	CLEETHORPES	529676	409297	2000		55264	1 Urbis LED	Axia 16 LED 500mA	28 Watts	6.00 Metres	Galvanised Steel	
Y	2	STREET LIGHTING	PENDRETH PLACE	CLEETHORPES	529710	409313	2000		55265	1 Urbis LED	Axia 16 LED 500mA	28 Watts	6.00 Metres	Galvanised Steel	
Y	1	STREET LIGHTING	POPLAR GROVE	CLEETHORPES	530317.04	409088.81	1988		55525	Urbis	Axia 16 LED 350mA	19 Watts	5.00 Metres	Galvanised Steel	
Y	2	STREET LIGHTING	POPLAR GROVE	CLEETHORPES	530327.68	409068.24	2015	30/07/2015	55526	Urbis	Axia 16 LED 350mA	19 Watts	6.00 Metres	Galvanised Steel	
Y	1	STREET LIGHTING	POPLAR ROAD	CLEETHORPES	530183.35	409010.37	1988		55527	Urbis	Axia 16 LED 350mA	19 Watts	5.00 Metres	Galvanised Steel	
Y	2	STREET LIGHTING	POPLAR ROAD	CLEETHORPES	530215.65	409022.29	1988		55528	Urbis	Axia 16 LED 350mA	19 Watts	5.00 Metres	Galvanised Steel	
Y	3	STREET LIGHTING	POPLAR ROAD	CLEETHORPES	530238.69	409040.46	1988		55529	Urbis	Axia 16 LED 350mA	19 Watts	5.00 Metres	Galvanised Steel	
Y	4	STREET LIGHTING	POPLAR ROAD	CLEETHORPES	530255.53	409065.33	1988		55530	Urbis	Axia 16 LED 350mA	19 Watts	5.00 Metres	Galvanised Steel	
Y	5	STREET LIGHTING	POPLAR ROAD	CLEETHORPES	530283.63	409076.4	1988		55531	Urbis	Axia 16 LED 350mA	19 Watts	5.00 Metres	Galvanised Steel	
Y	6	STREET LIGHTING	POPLAR ROAD	CLEETHORPES	530300.21	409101.28	1988		55532	Urbis	Axia 16 LED 350mA	19 Watts	5.00 Metres	Galvanised Steel	
Y	7	STREET LIGHTING	POPLAR ROAD	CLEETHORPES	530326.66	409110.65	1988		55533	Urbis	Axia 16 LED 350mA	19 Watts	5.00 Metres	Galvanised Steel	
Y	8	STREET LIGHTING	POPLAR ROAD	CLEETHORPES	530343.88	409136.22	1988		55534	Urbis	Axia 16 LED 350mA	19 Watts	5.00 Metres	Galvanised Steel	
Y	9	STREET LIGHTING	POPLAR ROAD	CLEETHORPES	530364.89	409152.61	1988		55535	Urbis	Axia 16 LED 350mA	19 Watts	5.00 Metres	Galvanised Steel	
Y	10	STREET LIGHTING	POPLAR ROAD	CLEETHORPES	530394.64	409165.08	1983		55536	Urbis	Axia 16 LED 350mA	19 Watts	8.00 Metres	Galvanised Steel	
Y	11	STREET LIGHTING	POPLAR ROAD	CLEETHORPES	530415.4	409193.5	1983		55537	Urbis	Axia 16 LED 350mA	19 Watts	8.00 Metres	Galvanised Steel	
Y	12	STREET LIGHTING	POPLAR ROAD	CLEETHORPES	530437.8	409211.07	1983		55538	Urbis	Axia 16 LED 350mA	19 Watts	8.00 Metres	Galvanised Steel	
Y	13	STREET LIGHTING	POPLAR ROAD	CLEETHORPES	530461.98	409229.99	1983		55539	Urbis	Axia 16 LED 350mA	19 Watts	8.00 Metres	Galvanised Steel	
Y	1	STREET LIGHTING	REYNOLDS STREET	CLEETHORPES	530037.3	409133.86	2018	04/05/2018	56035	Urbis	Ampera 16 LED 500mA	28 Watts	6.00 Metres	Galvanised Steel	
Y	2	STREET LIGHTING	REYNOLDS STREET	CLEETHORPES	530016.14	409117.34	2018	04/05/2018	67056	Urbis	Ampera 16 LED 500mA	28 Watts	6.00 Metres	Galvanised Steel	
Y	3	STREET LIGHTING	REYNOLDS STREET	CLEETHORPES	529988.18	409108.1	1999		56036	1 Urbis LED	Teceo 16 LED 500mA	28 Watts	6.00 Metres	Steel	
Y	4	STREET LIGHTING	REYNOLDS STREET	CLEETHORPES	529968.59	409079.59	2010	01/11/2010	56037	1 Urbis LED	Teceo 16 LED 500mA	28 Watts	6.00 Metres	Galvanised Steel	
Y	5	STREET LIGHTING	REYNOLDS STREET	CLEETHORPES	529942.17	409072.57	2010		56038	1 Urbis LED	Teceo 16 LED 500mA	28 Watts	6.00 Metres	Steel	
Y	6	STREET LIGHTING	REYNOLDS STREET	CLEETHORPES	529923.7	409044.34	2010		56039	1 Urbis LED	Teceo 16 LED 500mA	28 Watts	6.00 Metres	Steel	
Y	7	STREET LIGHTING	REYNOLDS STREET	CLEETHORPES	529892.37	409033.58	2010		56040	1 Urbis LED	Teceo 16 LED 500mA	28 Watts	6.00 Metres	Steel	
Y	8	STREET LIGHTING	REYNOLDS STREET	CLEETHORPES	529867.43	409000.13	1993		56041	1 Urbis LED	Teceo 16 LED 500mA	28 Watts	6.00 Metres	Galvanised Steel	
Y	9	STREET LIGHTING	REYNOLDS STREET	CLEETHORPES	529843.63	408981.97	1993		56042	1 Urbis LED	Teceo 16 LED 500mA	28 Watts	6.00 Metres	Galvanised Steel	
Y	10	STREET LIGHTING	REYNOLDS STREET	CLEETHORPES	529817.31	408974.57	1993		56043	1 Urbis LED	Teceo 16 LED 500mA	28 Watts	6.00 Metres	Galvanised Steel	
Y	11	STREET LIGHTING	REYNOLDS STREET	CLEETHORPES	529804.65	408951.34	1993		56044	1 Urbis LED	Teceo 16 LED 500mA	28 Watts	6.00 Metres	Galvanised Steel	
Y	12	STREET LIGHTING	REYNOLDS STREET	CLEETHORPES	529777.94	408944.06	1993		56045	1 Urbis LED	Teceo 16 LED 500mA	28 Watts	6.00 Metres	Galvanised Steel	
Y	13	STREET LIGHTING	REYNOLDS STREET	CLEETHORPES	529756.42	408927.16	1993		56046	1 Urbis LED	Teceo 16 LED 500mA	28 Watts	6.00 Metres	Galvanised Steel	
Y	1	STREET LIGHTING	ROBSON ROAD	CLEETHORPES	529879.81	409334.33	2018	04/05/2018	56209	Urbis	Ampera 16 LED 500mA	28 Watts	6.00 Metres	Galvanised Steel	
Y	2	STREET LIGHTING	ROBSON ROAD	CLEETHORPES	529845.71	409320.26	2018	04/05/2018	67057	Urbis	Ampera 16 LED 500mA	28 Watts	6.00 Metres	Galvanised Steel	
Y	3	STREET LIGHTING	ROBSON ROAD	CLEETHORPES	529823.78	409289.22	2018	04/05/2018	67058	Urbis	Ampera 16 LED 500mA	28 Watts	6.00 Metres	Galvanised Steel	
Y	4	STREET LIGHTING	ROBSON ROAD	CLEETHORPES	529791.12	409276.59	2018	04/05/2018	67059	Urbis	Ampera 16 LED 500mA	28 Watts	6.00 Metres	Galvanised Steel	
Y	5	STREET LIGHTING	ROBSON ROAD	CLEETHORPES	529777.39	409251.86	2018	04/05/2018	67060	Urbis	Ampera 16 LED 500mA	28 Watts	6.00 Metres	Galvanised Steel	
Y	6	STREET LIGHTING	ROBSON ROAD	CLEETHORPES	529736.88	409232.93	2018	04/05/2018	67061	Urbis	Ampera 16 LED 500mA	28 Watts	6.00 Metres	Galvanised Steel	
Y	7	STREET LIGHTING	ROBSON ROAD	CLEETHORPES	529699.71	409189.78	2018	04/05/2018	67062	Urbis	Ampera 16 LED 500mA	28 Watts	6.00 Metres	Galvanised Steel	
Y	8	STREET LIGHTING	ROBSON ROAD	CLEETHORPES	529663.12	409173.66	2018	04/05/2018	67063	Urbis	Ampera 16 LED 500mA	28 Watts	6.00 Metres	Galvanised Steel	
Y	9	STREET LIGHTING	ROBSON ROAD	CLEETHORPES	529650.75	409150.55	2018	04/05/2018	67064	Urbis	Ampera 16 LED 500mA	28 Watts	6.00 Metres	Galvanised Steel	
Y	1	STREET LIGHTING	SAUNBY GROVE	CLEETHORPES			2024	30/10/2024	70045	Urbis	Axia 16 LED 350mA	19 Watts	6.00 Metres	Galvanised Steel	
Y	2	STREET LIGHTING	SAUNBY GROVE	CLEETHORPES	530269.29	409280.83	2000		56606	Urbis	Axia 16 LED 350mA	19 Watts	6.00 Metres	Steel	
Y	3	STREET LIGHTING	SAUNBY GROVE	CLEETHORPES	530247.64	409262.57	2000		56607	Urbis	Axia 16 LED 350mA	19 Watts	6.00 Metres	Steel	
Y	4	STREET LIGHTING	SAUNBY GROVE	CLEETHORPES	530277.9	409255.6	2000		56608	Urbis	Axia 16 LED 350mA	19 Watts	6.00 Metres	Steel	
Y	5	STREET LIGHTING	SAUNBY GROVE	CLEETHORPES	530301.82	409238.26	2000		56609	Urbis	Axia 16 LED 350mA	19 Watts	6.00 Metres	Steel	
Y	6	STREET LIGHTING	SAUNBY GROVE	CLEETHORPES	530314.35	409217.44	2000		56610	Urbis	Axia 16 LED 350mA	19 Watts	6.00 Metres	Steel	
Y	1	STREET LIGHTING	SIDNEY COURT	CLEETHORPES	528923.76	409932.03	1989		57183	Urbis	Axia 16 LED 350mA	19 Watts	5.00 Metres	Galvanised Steel	
Y	2	STREET LIGHTING	SIDNEY COURT	CLEETHORPES	528907.81	409921.09	1989		57184	Urbis	Axia 16 LED 350mA	19 Watts	5.00 Metres	Galvanised Steel	
Y	3	STREET LIGHTING	SIDNEY COURT	CLEETHORPES	528891.87	409914.82	1989		57185	Urbis	Axia 16 LED 350mA	19 Watts	5.00 Metres	Galvanised Steel	
Y	1	STREET LIGHTING	SIMONS PLACE	CLEETHORPES	529649.04	409275.03	2009		57232	1 Urbis LED	Axia 16 LED 500mA	28 Watts	6.00 Metres	Steel	
Y	2	STREET LIGHTING	SIMONS PLACE	CLEETHORPES	529637.61	409243.41	2009		57233	1 Urbis LED	Axia 16 LED 500mA	28 Watts	6.00 Metres	Steel	
Y	3	STREET LIGHTING	SIMONS PLACE	CLEETHORPES	529620.65	409264.32	2009		57234	1 Urbis LED	Axia 16 LED 500mA	28 Watts	6.00 Metres	Steel	
Y	1	STREET LIGHTING	ST HELIERS ROAD	CLEETHORPES	530066	409169.79	1988		57704	1 Urbis LED	Axia 16 LED 500mA	28 Watts	6.00 Metres	Galvanised Steel	
Y	2	STREET LIGHTING	ST HELIERS ROAD	CLEETHORPES	530094.61	409178.34	1988		57705	1 Urbis LED	Axia 16 LED 500mA	28 Watts	6.00 Metres	Galvanised Steel	
Y	3	STREET LIGHTING	ST HELIERS ROAD	CLEETHORPES	530119.8	409198.53	1988		57706	1 Urbis LED	Axia 16 LED 500mA	28 Watts	6.00 Metres	Galvanised Steel	
Y	4	STREET LIGHTING	ST HELIERS ROAD	CLEETHORPES	530143.47	409217.58	1988		57707	1 Urbis LED	Axia 16 LED 500mA	28 Watts	6.00 Metres	Galvanised Steel	
Y	5	STREET LIGHTING	ST HELIERS ROAD	CLEETHORPES	530162.58	409246.31	1988		57708	1 Urbis LED	Axia 16 LED 500mA	28 Watts	6.00 Metres	Galvanised Steel	
Y	6	STREET LIGHTING	ST HELIERS ROAD	CLEETHORPES	530194.73	409257.89	1988		57709	1 Urbis LED	Axia 16 LED 500mA	28 Watts	6.00 Metres	Galvanised Steel	
Y	7	STREET LIGHTING	ST HELIERS ROAD	CLEETHORPES	530212.96	409286.56	1988		57710	1 Urbis LED	Axia 16 LED 500mA	28 Watts	6.00 Metres	Galvanised Steel	
Y	8	STREET LIGHTING	ST HELIERS ROAD	CLEETHORPES	530246.25	409299.15	1988		57711	1 Urbis LED	Axia 16 LED 500mA	28 Watts	6.00 Metres	Galvanised Steel	
Y	9	STREET LIGHTING	ST HELIERS ROAD	CLEETHORPES	530271.56	409319.66	1988		57712	1 Urbis LED	Axia 16 LED 500mA	28 Watts	6.00 Metres	Galvanised Steel	
Y	1	STREET LIGHTING	TENNYSON ROAD	CLEETHORPES	530029	409223	2002		58840	1 Urbis LED	Axia 16 LED 500mA	28 Watts	6.00 Metres	Stainless Steel	
Y	2	STREET LIGHTING	TENNYSON ROAD	CLEETHORPES	530049	409240	2002		58841	1 Urbis LED	Axia 16 LED 500mA	28 Watts	6.00 Metres	Stainless Steel	
Y	3	STREET LIGHTING	TENNYSON ROAD	CLEETHORPES	530069.53	409255.66	2004		58842	1 Urbis LED	Axia 16 LED 500mA	28 Watts	6.00 Metres	Stainless Steel	
Y	4	STREET LIGHTING	TENNYSON ROAD	CLEETHORPES	530090.52	409270.18	2015	30/07/2015	58843	1 Urbis LED	Axia 16 LED 500mA	28 Watts	6.00 Metres	Galvanised Steel	
Y	5	STREET LIGHTING	TENNYSON ROAD	CLEETHORPES	530106	409284	2002		58844	1 Urbis LED	Axia 16 LED 500mA	28 Watts	6.00 Metres	Stainless Steel	
Y	6	STREET LIGHTING	TENNYSON ROAD	CLEETHORPES	530126	409301	2002		58845	1 Urbis LED	Axia 16 LED 500mA	28 Watts	6.00 Metres	Stainless Steel	
Y	7	STREET LIGHTING	TENNYSON ROAD	CLEETHORPES	530151.41	409308.91	2015	30/07/2015	58846	1 Urbis LED	Axia 16 LED 500mA	28 Watts	6.00 Metres	Galvanised Steel	
Y	8	STREET LIGHTING	TENNYSON ROAD	CLEETHORPES	530174.15	409339.25	2009		58847	1 Urbis LED	Axia 16 LED 500mA	28 Watts	6.00 Metres	Steel	
Y	9	STREET LIGHTING	TENNYSON ROAD	CLEETHORPES	530211.79	409356.89	2015	30/07/2015	58848	1 Urbis LED	Axia 16 LED 500mA	28 Watts	6.00 Metres	Galvanised Steel	
Y	10	STREET LIGHTING	TENNYSON ROAD	CLEETHORPES	530236.85	409387.52	2009		58849	1 Urbis LED	Axia 16 LED 500mA	28 Watts	6.00 Metres	Steel	
Y	1	STREET LIGHTING	TWYNING PLACE	CLEETHORPES	529775.51	409470.44	1992		59495	Urbis	Axia 16 LED 350mA	19 Watts	5.00 Metres	Galvanised Steel	
Y	2	STREET LIGHTING	TWYNING PLACE	CLEETHORPES	529748.93	409459.24	1992		59496	Urbis	Axia 16 LED 350mA	19 Watts	5.00 Metres	Galvanised Steel	
Y	3	STREET LIGHTING	TWYNING PLACE	CLEETHORPES	529720.64	409434.39	2019	10/12/2019	67645	Urbis	Axia 16 LED 350mA	19 Watts	6.00 Metres	Galvanised Steel	
Y	1	STREET LIGHTING	HIGH STREET	CLEETHORPES	530591.71	408948.61	2019	01/01/2019	70179	1 Urbis LED	Yoa Maxi 64 LED 700 mA	139 Watts	10.00 Metres	Galvanised Steel	
Y	2	STREET LIGHTING	HIGH STREET	CLEETHORPES	530578.03	408963.55	2019	01/01/2019	70180	1 Urbis LED	Yoa Maxi 64 LED 700 mA	139 Watts	10.00 Metres	Galvanised Steel	
Y	3	STREET LIGHTING	HIGH STREET	CLEETHORPES	530570.06	408937.91	2019	01/01/2019	70181	1 Urbis LED	Yoa Maxi 64 LED 700 mA	139 Watts	10.00 Metres	Galvanised Steel	
Y	4	STREET LIGHTING	HIGH STREET	CLEETHORPES	530532.84	408933.67	2019	01/01/2019	70182	1 Urbis LED	Yoa Maxi 64 LED 700 mA	139 Watts	10.00 Metres	Galvanised Steel	
Y	5	STREET LIGHTING	HIGH STREET	CLEETHORPES	530509.81	408908.42	2019	01/01/2019	70183	1 Urbis LED	Yoa Maxi 64 LED 700 mA	139 Watts	10.00 Metres	Galvanised Steel	
Y	6	STREET LIGHTING	HIGH STREET	CLEETHORPES	530499.32	408924.95	2019	01/01/2019	70184	1 Urbis LED	Yoa Maxi 64 LED 700 mA	139 Watts	10.00 Metres	Galvanised Steel	
Y	7	STREET LIGHTING	HIGH STREET	CLEETHORPES	530469.18	408914.49	2019	01/01/2019	70185	1 Urbis LED	Yoa Maxi 64 LED 700 mA	139 Watts	10.00 Metres	Galvanised Steel	
Y	8	STREET LIGHTING	HIGH STREET	CLEETHORPES	530446.57	408903.92	2019	01/01/2019	70186	1 Urbis LED	Yoa Maxi 64 LED 700 mA	139 Watts	10.00 Metres	Galvanised Steel	
Y	9	STREET LIGHTING	HIGH STREET	CLEETHORPES	530432.97	408877.47	2019	01/01/2019	70187	1 Urbis LED	Yoa Maxi 64 LED 700 mA	139 Watts	10.00 Metres	Galvanised Steel	
Y	10	STREET LIGHTING	HIGH STREET	CLEETHORPES	530399.43	408880.71	2019	01/01/2019	70188	1 Urbis LED	Yoa Maxi 64 LED 700 mA	139 Watts	10.00 Metres	Galvanised Steel	
Y	1	STREET LIGHTING	PRINCES ROAD	CLEETHORPES	530250.44	408953.12	1983		55635	Urbis	AXIA 3.2 32 LED 510mA	50 Watts	8.00 Metres	Galvanised Steel	

Y	2	STREET LIGHTING	PRINCES ROAD	CLEETHORPES	530289.17	408967.36	1983		55636	1 Urbis LED	Teceo 40 LED 500mA	64 Watts	8.00 Metres	Galvanised Steel	
Y	3	STREET LIGHTING	PRINCES ROAD	CLEETHORPES	530302.84	408991.41	1983		55637	Urbis	AXIA 3.2 32 LED 510mA	50 Watts	8.00 Metres	Galvanised Steel	
Y	4	STREET LIGHTING	PRINCES ROAD	CLEETHORPES	530336.64	408998.81	1983		55638	Urbis	AXIA 3.2 32 LED 510mA	50 Watts	8.00 Metres	Galvanised Steel	
Y	5	STREET LIGHTING	PRINCES ROAD	CLEETHORPES	530350.05	409024.76	1983		55639	Urbis	AXIA 3.2 32 LED 510mA	50 Watts	8.00 Metres	Galvanised Steel	
Y	6	STREET LIGHTING	PRINCES ROAD	CLEETHORPES	530381.44	409032.67	1983		55640	1 Urbis LED	Teceo 40 LED 500mA	64 Watts	8.00 Metres	Galvanised Steel	
Y	7	STREET LIGHTING	PRINCES ROAD	CLEETHORPES	530400.05	409060.77	1983		55641	Urbis	AXIA 3.2 32 LED 510mA	50 Watts	8.00 Metres	Galvanised Steel	
Y	8	STREET LIGHTING	PRINCES ROAD	CLEETHORPES	530433.85	409068.55	1983		55642	Urbis	AXIA 3.2 32 LED 510mA	50 Watts	8.00 Metres	Galvanised Steel	
Y	9	STREET LIGHTING	PRINCES ROAD	CLEETHORPES	530445.49	409092.92	1983		55643	Urbis	AXIA 3.2 32 LED 510mA	50 Watts	8.00 Metres	Galvanised Steel	
Y	10	STREET LIGHTING	PRINCES ROAD	CLEETHORPES	530471.44	409097.22	1983		55644	1 Urbis LED	Teceo 40 LED 500mA	64 Watts	8.00 Metres	Galvanised Steel	
Y	11	STREET LIGHTING	PRINCES ROAD	CLEETHORPES	530496.37	409129.37	1983		55645	Urbis	AXIA 3.2 32 LED 510mA	50 Watts	8.00 Metres	Galvanised Steel	
Y	1	STREET LIGHTING	ISAACS HILL	CLEETHORPES	530370.7	408855.89	1995		51364	1 Urbis LED	Teceo 48 LED 700mA	104 Watts	12.00 Metres	Galvanised Steel	
Y	2	STREET LIGHTING	ISAACS HILL	CLEETHORPES	530349.69	408863.17	1995		51365	1 Urbis LED	Teceo 48 LED 700mA	104 Watts	12.00 Metres	Galvanised Steel	
Y	3	STREET LIGHTING	ISAACS HILL	CLEETHORPES	530321.8	408877.7	2009		51366	1 Urbis LED	Teceo 48 LED 700mA	104 Watts	12.00 Metres	Steel	
Y	4	STREET LIGHTING	ISAACS HILL	CLEETHORPES	530296.27	408891.53	1995		51367	1 Urbis LED	Teceo 48 LED 700mA	104 Watts	12.00 Metres	Galvanised Steel	
Y	5	STREET LIGHTING	ISAACS HILL	CLEETHORPES	530269.31	408905.51	1995		51368	1 Urbis LED	Teceo 48 LED 700mA	104 Watts	12.00 Metres	Galvanised Steel	
Y	1	STREET LIGHTING	STATION ROAD	CLEETHORPES				02/12/2024	70048	Urbis	Teceo 40 LED 500mA	64 Watts	8.00 Metres	Galvanised Steel	
Y	2	STREET LIGHTING	STATION ROAD	CLEETHORPES	530542.11	409070.71	1985		58177	1 Urbis LED	Teceo 40 LED 500mA	64 Watts	8.00 Metres	Galvanised Steel	
Y	3	STREET LIGHTING	STATION ROAD	CLEETHORPES	530558.32	409095.01	1985		58178	1 Urbis LED	Teceo 40 LED 500mA	64 Watts	8.00 Metres	Galvanised Steel	
Y	4	STREET LIGHTING	STATION ROAD	CLEETHORPES	530547.3	409110.9	1985		58179	1 Urbis LED	Teceo 40 LED 500mA	64 Watts	8.00 Metres	Galvanised Steel	
Y	5	STREET LIGHTING	STATION ROAD	CLEETHORPES	530554.77	409129.57	1985		58180	1 Urbis LED	Teceo 40 LED 500mA	64 Watts	8.00 Metres	Galvanised Steel	
Y	6	STREET LIGHTING	STATION ROAD	CLEETHORPES	530537.05	409153.43	2003		58181	Philips		66 Watts	8.00 Metres	Galvanised Steel	
Y	7	STREET LIGHTING	STATION ROAD	CLEETHORPES	530519.58	409179.25	2003		58182	Philips		66 Watts	8.00 Metres	Galvanised Steel	
Y	8	STREET LIGHTING	STATION ROAD	CLEETHORPES	530505.02	409203.93	2003		58183	Philips		66 Watts	8.00 Metres	Galvanised Steel	
Y	9	STREET LIGHTING	STATION ROAD	CLEETHORPES	530488.31	409230.19	2009		58184	1 Urbis LED	Teceo 40 LED 500mA	64 Watts	8.00 Metres	Steel	
Y	1	STREET LIGHTING	PELHAM ROAD	CLEETHORPES	529960.21	409296.8	2015	18/09/2015	55158	1 Urbis LED	Teceo 32 LED 500mA	52 Watts	6.00 Metres	Galvanised Steel	
Y	2	STREET LIGHTING	PELHAM ROAD	CLEETHORPES	529990.71	409321.8	1983		55159	1 Urbis LED	Teceo 32 LED 500mA	52 Watts	6.00 Metres	Galvanised Steel	
Y	3	STREET LIGHTING	PELHAM ROAD	CLEETHORPES	530024.38	409336.23	2014	15/10/2014	55160	1 Urbis LED	Teceo 32 LED 500mA	52 Watts	6.00 Metres	Galvanised Steel	
Y	4	STREET LIGHTING	PELHAM ROAD	CLEETHORPES	530043.96	409363.58	2002		55161	1 Urbis LED	Teceo 32 LED 500mA	52 Watts	6.00 Metres	Stainless Steel	
Y	5	STREET LIGHTING	PELHAM ROAD	CLEETHORPES	530073.76	409387.8	2002		55162	1 Urbis LED	Teceo 32 LED 500mA	52 Watts	6.00 Metres	Stainless Steel	
Y	1	STREET LIGHTING	HAWTHORNE AVENUE	CLEETHORPES	529832.09	409605	1990		50375	1 Urbis LED	Teceo 16 LED 500mA	28 Watts	6.00 Metres	Galvanised Steel	
Y	2	STREET LIGHTING	HAWTHORNE AVENUE	CLEETHORPES	529841.46	409575.7	1990		50376	1 Urbis LED	Teceo 16 LED 500mA	28 Watts	6.00 Metres	Galvanised Steel	
Y	3	STREET LIGHTING	HAWTHORNE AVENUE	CLEETHORPES	529868.68	409557.79	1990		50377	1 Urbis LED	Teceo 16 LED 500mA	28 Watts	6.00 Metres	Galvanised Steel	
Y	4	STREET LIGHTING	HAWTHORNE AVENUE	CLEETHORPES	529877.41	409528.99	1990		50378	1 Urbis LED	Teceo 16 LED 500mA	28 Watts	6.00 Metres	Galvanised Steel	
Y	5	STREET LIGHTING	HAWTHORNE AVENUE	CLEETHORPES	529902.35	409514.5	1990		50379	1 Urbis LED	Teceo 16 LED 500mA	28 Watts	6.00 Metres	Galvanised Steel	
Y	6	STREET LIGHTING	HAWTHORNE AVENUE	CLEETHORPES	529914.12	409482.54	1990		50380	1 Urbis LED	Teceo 16 LED 500mA	28 Watts	6.00 Metres	Galvanised Steel	
Y	1	STREET LIGHTING	GRANT STREET	CLEETHORPES	530584.27	408984.26	1985		58173	1 Urbis LED	Teceo 40 LED 500mA	64 Watts	8.00 Metres	Galvanised Steel	
Y	2	STREET LIGHTING	GRANT STREET	CLEETHORPES	530575.91	408995.78	1988		58174	1 Urbis LED	Teceo 40 LED 500mA	64 Watts	8.00 Metres	Galvanised Steel	
Y	3	STREET LIGHTING	GRANT STREET	CLEETHORPES	530551.1	409011.41	1985		58175	1 Urbis LED	Teceo 40 LED 500mA	64 Watts	8.00 Metres	Galvanised Steel	
Y	4	STREET LIGHTING	GRANT STREET	CLEETHORPES	530533.63	409048.5	1984		49443	1 Urbis LED	Teceo 24 LED 500mA	40 Watts	8.00 Metres	Galvanised Steel	
Y	5	STREET LIGHTING	GRANT STREET	CLEETHORPES	530503	409071.98	1984		49444	1 Urbis LED	Teceo 24 LED 500mA	40 Watts	8.00 Metres	Galvanised Steel	
Y	6	STREET LIGHTING	GRANT STREET	CLEETHORPES	530494.9	409101.6	1984		49445	1 Urbis LED	Teceo 24 LED 500mA	40 Watts	8.00 Metres	Galvanised Steel	
Y	7	STREET LIGHTING	GRANT STREET	CLEETHORPES	530471.88	409131.06	2003		49446	Urbis		70 Watts	8.00 Metres	Steel	
Y	8	STREET LIGHTING	GRANT STREET	CLEETHORPES	530457.81	409150.2	2003		49447	Urbis		70 Watts	8.00 Metres	Steel	
Y	9	STREET LIGHTING	GRANT STREET	CLEETHORPES	530444.34	409168.56	2003		49448	Urbis		70 Watts	8.00 Metres	Steel	
Y	10	STREET LIGHTING	GRANT STREET	CLEETHORPES	530432.42	409184.18	2003		49449	Urbis		70 Watts	8.00 Metres	Steel	
Y	1	STREET LIGHTING	COLLEGE STREET	CLEETHORPES	530338.25	408900.55	2011		46380	1 Urbis LED	Axia 16 LED 500mA	28 Watts	6.00 Metres	Steel	
Y	2	STREET LIGHTING	COLLEGE STREET	CLEETHORPES	530361.1	408929.97	2011		46381	1 Urbis LED	Axia 16 LED 500mA	28 Watts	6.00 Metres	Steel	
Y	3	STREET LIGHTING	COLLEGE STREET	CLEETHORPES	530394.88	408941.25	2011		46382	1 Urbis LED	Axia 16 LED 500mA	28 Watts	6.00 Metres	Steel	
Y	4	STREET LIGHTING	COLLEGE STREET	CLEETHORPES	530418.89	408971.97	2011		46383	1 Urbis LED	Axia 16 LED 500mA	28 Watts	6.00 Metres	Steel	
Y	5	STREET LIGHTING	COLLEGE STREET	CLEETHORPES	530454.17	408984.14	2011		46384	1 Urbis LED	Axia 16 LED 500mA	28 Watts	6.00 Metres	Steel	
Y	6	STREET LIGHTING	COLLEGE STREET	CLEETHORPES	530475.32	409012.65	2011		46385	1 Urbis LED	Axia 16 LED 500mA	28 Watts	6.00 Metres	Steel	
Y	7	STREET LIGHTING	COLLEGE STREET	CLEETHORPES	530509.76	409024.12	2011		46386	1 Urbis LED	Axia 16 LED 500mA	28 Watts	6.00 Metres	Steel	
Y	1	STREET LIGHTING	GRANT STREET CAR PARK	CLEETHORPES	530473.04	409132.03	2003		61621	Urbis		150 Watts	8.00 Metres	Steel	
Y	1	STREET LIGHTING	GRANT STREET CAR PARK	CLEETHORPES	530473.04	409132.03	2003		62153	Urbis		150 Watts	8.00 Metres	Steel	
Y	2	STREET LIGHTING	GRANT STREET CAR PARK	CLEETHORPES	530458.98	409150.98	2003		61622	Urbis		150 Watts	8.00 Metres	Steel	
Y	2	STREET LIGHTING	GRANT STREET CAR PARK	CLEETHORPES	530458.98	409150.98	2003		62154	Urbis		150 Watts	8.00 Metres	Steel	
Y	3	STREET LIGHTING	GRANT STREET CAR PARK	CLEETHORPES	530445.7	409169.34	2003		61623	Urbis		150 Watts	8.00 Metres	Steel	
Y	3	STREET LIGHTING	GRANT STREET CAR PARK	CLEETHORPES	530445.7	409169.34	2003		62155	Urbis		150 Watts	8.00 Metres	Steel	
Y	4	STREET LIGHTING	GRANT STREET CAR PARK	CLEETHORPES	530433.5	409185.16	2003		61624	Urbis		150 Watts	8.00 Metres	Steel	
Y	4	STREET LIGHTING	GRANT STREET CAR PARK	CLEETHORPES	530433.5	409185.16	2003		62156	Urbis		150 Watts	8.00 Metres	Steel	
Y	5	STREET LIGHTING	GRANT STREET CAR PARK	CLEETHORPES	530512.5	409159.77	2003		61625	Urbis		150 Watts	8.00 Metres	Steel	
Y	5	STREET LIGHTING	GRANT STREET CAR PARK	CLEETHORPES	530512.5	409159.77	2003		62157	Urbis		150 Watts	8.00 Metres	Steel	
Y	6	STREET LIGHTING	GRANT STREET CAR PARK	CLEETHORPES	530501.76	409178.71	2003		61626	Urbis		150 Watts	8.00 Metres	Steel	
Y	6	STREET LIGHTING	GRANT STREET CAR PARK	CLEETHORPES	530501.76	409178.71	2003		62158	Urbis		150 Watts	8.00 Metres	Steel	
Y	7	STREET LIGHTING	GRANT STREET CAR PARK	CLEETHORPES	530488.47	409200.2	2003		61627	Urbis		150 Watts	8.00 Metres	Steel	
Y	7	STREET LIGHTING	GRANT STREET CAR PARK	CLEETHORPES	530488.47	409200.2	2003		62159	Urbis		150 Watts	8.00 Metres	Steel	
Y	8	STREET LIGHTING	GRANT STREET CAR PARK	CLEETHORPES	530478.32	409215.24	2003		61628	Urbis		150 Watts	8.00 Metres	Steel	
Y	8	STREET LIGHTING	GRANT STREET CAR PARK	CLEETHORPES	530478.32	409215.24	2003		62160	Urbis		150 Watts	8.00 Metres	Steel	
Y	1	STREET LIGHTING	HIGH STREET CAR PARK	CLEETHORPES	530398.57	408888.11	2017		50713	1 Urbis LED	Teceo 40 LED 500mA	64 Watts	8.00 Metres	Galvanised Steel	
Y	2	STREET LIGHTING	HIGH STREET CAR PARK	CLEETHORPES	530422.64	408898.62	2017		66909	1 Urbis LED	Teceo 40 LED 500mA	64 Watts	8.00 Metres	Galvanised Steel	
Y	3	STREET LIGHTING	HIGH STREET CAR PARK	CLEETHORPES	530441.51	408906.33	2017		66910	1 Urbis LED	Teceo 40 LED 500mA	64 Watts	8.00 Metres	Galvanised Steel	
Y	4	STREET LIGHTING	HIGH STREET CAR PARK	CLEETHORPES	530439.41	408930.14	2017		66911	1 Urbis LED	Ampera 48 LED 700mA	104 Watts	8.00 Metres	Galvanised Steel	
Y	1	STREET LIGHTING	STATION APPROACH	CLEETHORPES	530568.31	409107.48	1985		58155	1 Urbis LED	Teceo 40 LED 500mA	64 Watts	8.00 Metres	Galvanised Steel	
Y	1	STREET LIGHTING	BEACON COURT	GRIMSBY	529844.1	408702.16	2006		43851	Urbis	Axia 16 LED 350mA	19 Watts	5.00 Metres	Stainless Steel	
Y	2	STREET LIGHTING	BEACON COURT	GRIMSBY	529824.92	408731.24	2015	30/07/2015	43852	Urbis	Axia 16 LED 350mA	19 Watts	6.00 Metres	Galvanised Steel	
Y	3	STREET LIGHTING	BEACON COURT	GRIMSBY	529804.41	408760.04	2015	30/07/2015	43853	Urbis	Axia 16 LED 350mA	19 Watts	6.00 Metres	Galvanised Steel	
Y	4	STREET LIGHTING	BEACON COURT	GRIMSBY	529786.06	408785.36	2012	28/08/2012	43854	Urbis	Axia 16 LED 350mA	19 Watts	6.00 Metres	Galvanised Steel	
Y	5	STREET LIGHTING	BEACON COURT	GRIMSBY	529775.3	408809.47	2015	30/07/2015	43855	Urbis	Axia 16 LED 350mA	19 Watts	6.00 Metres	Galvanised Steel	
Y	1	STREET LIGHTING	BEELEY ROAD	GRIMSBY	529396.17	408488.45	2017		43930	1 Urbis LED	Axia 16 LED 500mA	28 Watts	6.00 Metres	Galvanised Steel	
Y	2	STREET LIGHTING	BEELEY ROAD	GRIMSBY	529371.36	408527.48	1968		43931	1 Urbis LED	Axia 16 LED 500mA	28 Watts	5.00 Metres	Steel	
Y	3	STREET LIGHTING	BEELEY ROAD	GRIMSBY	529339.72	408554.5	1968		43932	1 Urbis LED	Axia 16 LED 500mA	28 Watts	5.00 Metres	Steel	
Y	4	STREET LIGHTING	BEELEY ROAD	GRIMSBY	529313.39	408595.51	1968		43933	1 Urbis LED	Axia 16 LED 500mA	28 Watts	5.00 Metres	Steel	
Y	5	STREET LIGHTING	BEELEY ROAD	GRIMSBY	529279.09	408625.89	1968		43934	1 Urbis LED	Axia 16 LED 500mA	28 Watts	5.00 Metres	Steel	
Y	6	STREET LIGHTING	BEELEY ROAD	GRIMSBY	529263.89	408640.68	2011		43935	1 Urbis LED	Axia 16 LED 500mA	28 Watts	6.00 Metres	Steel	
Y	7	STREET LIGHTING	BEELEY ROAD	GRIMSBY	529225.26	408667.52	2008		43936	1 Urbis LED	Axia 16 LED 500mA	28 Watts	6.00 Metres	Steel	
Y	8	STREET LIGHTING	BEELEY ROAD	GRIMSBY	529230.36	408680.07	2011		43937	1 Urbis LED	Axia 16 LED 500mA	28 Watts	6.00 Metres	Steel	
Y	9	STREET LIGHTING	BEELEY ROAD	GRIMSBY	529219.14	408710.02	2011		43938	1 Urbis LED	Axia 16 LED 500mA	28 Watts	6.00 Metres	Steel	
Y	1	STREET LIGHTING	BESTALL ROAD	GRIMSBY	529481.64	408533.65	2014		44096	1 Urbis LED	Teceo 16 LED 500mA	28 Watts	6.00 Metres	Galvanised Steel	
Y	2	STREET LIGHTING	BESTALL ROAD	GRIMSBY	529469.61	408575.55	2016	25/01/2016	44097	1 Urbis LED	Teceo 16 LED 500mA	28 Watts	6.00 Metres	Galvanised Steel	
Y	1	STREET LIGHTING	CLAREMONT ROAD	GRIMSBY	529746.03	408750.27	2003		46111	1 Urbis LED	Teceo 16 LED 500mA	28 Watts	5.00 Metres	Stainless Steel	
Y	2	STREET LIGHTING	CLAREMONT ROAD	GRIMSBY	529704.07	408724.05	1995		46112	1 Urbis LED	Teceo 16 LED 500mA	28 Watts	5.00 Metres	Galvanised Steel	
Y	3	STREET LIGHTING	CLAREMONT ROAD	GRIMSBY	529649.07	408679.01	2016	16/03/2016	69936	1 Urbis LED	Teceo 16 LED 500mA	28 Watts	6.00 Metres	Galvanised Steel	
Y	4	STREET LIGHTING	CLAREMONT ROAD	GRIMSBY	529620.37	408669.13	2016	16/03/2016	46113	1 Urbis LED	Teceo 16 LED 500mA	28 Watts	6.00 Metres	Galvanised Steel	
Y	5	STREET LIGHTING	CLAREMONT ROAD	GRIMSBY	529582.83	408636.41	2016	16/03/2016	46114	1 Urbis LED	Teceo 16 LED 500mA	28 Watts	6.00 Metres	Galvanised Steel	
Y	6	STREET LIGHTING	CLAREMONT ROAD	GRIMSBY	529551.21	408616.15	2010	24/05/2010	46115	1 Urbis LED	Teceo 16 LED 500mA	28 Watts	6.00 Metres	Galvanised Steel	
Y	1	STREET LIGHTING	KELHAM ROAD	GRIMSBY	529687.22	408647.46	2002		51513	1 Urbis LED	Teceo 24 LED 500mA	40 Watts	6.00 Metres	Stainless Steel	
Y	2	STREET LIGHTING	KELHAM ROAD	GRIMSBY	529668.74	408688.16	2016	26/02/2016	51514	1 Urbis LED	Teceo 24 LED 500mA	40 Watts	6.00 Metres	Galvanised Steel	
Y	3	STREET LIGHTING	KELHAM ROAD	GRIMSBY	529633.43	408718.22	2016	26/02/2016	51515	1 Urbis LED	Teceo 24 LED 500mA	40 Watts	6.00 Metres	Galvanised Steel	
Y	1	STREET LIGHTING	ANN GROVE	CLEETHORPES	529771.47	407548.73	1956		43239	1 Urbis LED	Axia 16 LED 500mA	28 Watts	5.00 Metres	Galvanised Steel	
Y	2	STREET LIGHTING	ANN GROVE	CLEETHORPES	529760.84	407578.66	2014	15/11/2014	43240	1 Urbis LED	Axia 16 LED 500mA	28 Watts	6.00 Metres	Galvanised Steel	
Y	3	STREET LIGHTING	ANN GROVE	CLEETHORPES	529756.79	407608.54	2014	15/11/2014	43241	1 Urbis LED	Axia 16 LED 500mA	28 Watts	6.00 Metres	Galvanised Steel	
Y	1	STREET LIGHTING	APPLEGARTH CLOSE	CLEETHORPES	529609.95	408103.54	1985		43297	1 Urbis LED	Axia 16 LED 500mA	28 Watts	5.00 Metres	Galvanised Steel	
Y	1	STREET LIGHTING	BALMORAL ROAD	CLEETHORPES	529336.63	407928.27	1990		43576	1 Urbis LED	Teceo 24 LED 500mA	40 Watts	8.00 Metres	Galvanised Steel	
Y	2	STREET LIGHTING	BALMORAL ROAD	CLEETHORPES	529347.89	407902.23	1990		43577	1 Urbis LED	Teceo 24 LED 500mA	40 Watts	8.00 Metres	Galvanised Steel	
Y	3	STREET LIGHTING	BALMORAL ROAD	CLEETHORPES	529375.11	407888.24	1990		43578	1 Urbis LED	Teceo 24 LED 500mA	40 Watts	8.00 Metres	Galvanised Steel	
Y	4	STREET LIGHTING	BALMORAL ROAD	CLEETHORPES	529391.81	407861.47	1990		43579	1 Urbis LED	Teceo 24 LED 500mA	40 Watts	8.00 Metres	Galvanised Steel	
Y	5	STREET LIGHTING	BALMORAL ROAD	CLEETHORPES	529417.38	407850.26	1990		43580	1 Urbis LED	Teceo 24 LED 500mA	40 Watts	8.00 Metres	Galvanised Steel	
Y	6	STREET LIGHTING	BALMORAL ROAD	CLEETHORPES	529442.82	407846.53	1990		43581	1 Urbis LED	Teceo 24 LED 500mA	40 Watts	8.00 Metres	Galvanised Steel	
Y	7	STREET LIGHTING	BALMORAL ROAD	CLEETHORPES	529462.06	407858.11	1990		43582	1 Urbis LED	Teceo 24 LED 500mA	40 Watts	8.00 Metres	Galvanised Steel	
Y	8	STREET LIGHTING	BALMORAL ROAD	CLEETHORPES	529494.97	407858.68	1990		43583	1 Urbis LED	Teceo 24 LED 500mA	40 Watts	8.00 Metres	Galvanised Steel	

Y	1	STREET LIGHTING	BEACON AVENUE	CLEETHORPES	529868.05	408665.79	1992		43834	1 Urbis LED	Teceo 24 LED 500mA	40 Watts	8.00 Metres	Galvanised Steel	
Y	2	STREET LIGHTING	BEACON AVENUE	CLEETHORPES	529873.37	408641.93	1992		43835	1 Urbis LED	Teceo 24 LED 500mA	40 Watts	8.00 Metres	Galvanised Steel	
Y	3	STREET LIGHTING	BEACON AVENUE	CLEETHORPES	529893.11	408629.96	1992		43836	1 Urbis LED	Teceo 24 LED 500mA	40 Watts	8.00 Metres	Galvanised Steel	
Y	4	STREET LIGHTING	BEACON AVENUE	CLEETHORPES	529906.53	408610.91	1992		43837	1 Urbis LED	Teceo 24 LED 500mA	40 Watts	8.00 Metres	Galvanised Steel	
Y	5	STREET LIGHTING	BEACON AVENUE	CLEETHORPES	529920.08	408591.42	1992		43838	1 Urbis LED	Teceo 24 LED 500mA	40 Watts	8.00 Metres	Galvanised Steel	
Y	6	STREET LIGHTING	BEACON AVENUE	CLEETHORPES	529935.77	408569.34	1992		43839	1 Urbis LED	Teceo 24 LED 500mA	40 Watts	8.00 Metres	Galvanised Steel	
Y	7	STREET LIGHTING	BEACON AVENUE	CLEETHORPES	529949.7	408549.4	1992		43840	1 Urbis LED	Teceo 24 LED 500mA	40 Watts	8.00 Metres	Galvanised Steel	
Y	8	STREET LIGHTING	BEACON AVENUE	CLEETHORPES	529954.88	408525.92	1992		43841	1 Urbis LED	Teceo 24 LED 500mA	40 Watts	8.00 Metres	Galvanised Steel	
Y	9	STREET LIGHTING	BEACON AVENUE	CLEETHORPES	529976.02	408512.06	1992		43842	1 Urbis LED	Teceo 24 LED 500mA	40 Watts	8.00 Metres	Galvanised Steel	
Y	10	STREET LIGHTING	BEACON AVENUE	CLEETHORPES	529981.85	408486.94	1992		43843	1 Urbis LED	Teceo 24 LED 500mA	40 Watts	8.00 Metres	Galvanised Steel	
Y	11	STREET LIGHTING	BEACON AVENUE	CLEETHORPES	530002.1	408475.61	1992		43844	1 Urbis LED	Teceo 24 LED 500mA	40 Watts	8.00 Metres	Galvanised Steel	
Y	12	STREET LIGHTING	BEACON AVENUE	CLEETHORPES	530018.3	408452.44	1992		43845	1 Urbis LED	Teceo 24 LED 500mA	40 Watts	8.00 Metres	Galvanised Steel	
Y	13	STREET LIGHTING	BEACON AVENUE	CLEETHORPES	530021.85	408430.36	1992		43846	1 Urbis LED	Teceo 24 LED 500mA	40 Watts	8.00 Metres	Galvanised Steel	
Y	14	STREET LIGHTING	BEACON AVENUE	CLEETHORPES	530038.43	408407.95	1992		43847	1 Urbis LED	Teceo 24 LED 500mA	40 Watts	8.00 Metres	Galvanised Steel	
Y	15	STREET LIGHTING	BEACON AVENUE	CLEETHORPES	530052.73	408384.66	1992		43848	1 Urbis LED	Teceo 24 LED 500mA	40 Watts	8.00 Metres	Galvanised Steel	
Y	16	STREET LIGHTING	BEACON AVENUE	CLEETHORPES	530066.28	408359.67	1992		43849	1 Urbis LED	Teceo 24 LED 500mA	40 Watts	8.00 Metres	Galvanised Steel	
Y	17	STREET LIGHTING	BEACON AVENUE	CLEETHORPES	530079.36	408335.73	1992		43850	1 Urbis LED	Teceo 24 LED 500mA	40 Watts	8.00 Metres	Galvanised Steel	
Y	1	STREET LIGHTING	BRIAN AVENUE	CLEETHORPES	529838.03	407652.24	1965		44658	1 Urbis LED	Teceo 24 LED 500mA	40 Watts	5.00 Metres	Galvanised Steel	
Y	2	STREET LIGHTING	BRIAN AVENUE	CLEETHORPES	529851.85	407626.44	1965		44659	1 Urbis LED	Teceo 24 LED 500mA	40 Watts	5.00 Metres	Galvanised Steel	
Y	3	STREET LIGHTING	BRIAN AVENUE	CLEETHORPES	529854.76	407588.53	1965		44660	1 Urbis LED	Teceo 24 LED 500mA	40 Watts	5.00 Metres	Galvanised Steel	
Y	4	STREET LIGHTING	BRIAN AVENUE	CLEETHORPES	529843.37	407561.32	1965		44661	1 Urbis LED	Teceo 24 LED 500mA	40 Watts	5.00 Metres	Galvanised Steel	
Y	5	STREET LIGHTING	BRIAN AVENUE	CLEETHORPES	529807.8	407551.13	1965		44662	1 Urbis LED	Teceo 24 LED 500mA	40 Watts	5.00 Metres	Galvanised Steel	
Y	6	STREET LIGHTING	BRIAN AVENUE	CLEETHORPES	529778.44	407525.12	1965		44663	1 Urbis LED	Teceo 24 LED 500mA	40 Watts	5.00 Metres	Galvanised Steel	
Y	7	STREET LIGHTING	BRIAN AVENUE	CLEETHORPES	529747.3	407521.76	1965		44664	1 Urbis LED	Teceo 24 LED 500mA	40 Watts	5.00 Metres	Galvanised Steel	
Y	8	STREET LIGHTING	BRIAN AVENUE	CLEETHORPES	529725.78	407501.2	1965		44665	1 Urbis LED	Teceo 24 LED 500mA	40 Watts	5.00 Metres	Galvanised Steel	
Y	9	STREET LIGHTING	BRIAN AVENUE	CLEETHORPES	529691.73	407501.7	1965		44666	1 Urbis LED	Teceo 24 LED 500mA	40 Watts	5.00 Metres	Galvanised Steel	
Y	10	STREET LIGHTING	BRIAN AVENUE	CLEETHORPES	529660.94	407480.94	2021	05/07/2021	68564	Urbis	Teceo 24 LED 500mA	40 Watts	6.00 Metres	Galvanised Steel	
Y	11	STREET LIGHTING	BRIAN AVENUE	CLEETHORPES	529631.36	407482.59	1965		44668	1 Urbis LED	Teceo 24 LED 500mA	40 Watts	5.00 Metres	Galvanised Steel	
Y	12	STREET LIGHTING	BRIAN AVENUE	CLEETHORPES	529600.98	407460.25	1965		44669	1 Urbis LED	Teceo 24 LED 500mA	40 Watts	5.00 Metres	Galvanised Steel	
Y	13	STREET LIGHTING	BRIAN AVENUE	CLEETHORPES	529565.01	407459.19	1965		44670	1 Urbis LED	Teceo 24 LED 500mA	40 Watts	5.00 Metres	Galvanised Steel	
Y	14	STREET LIGHTING	BRIAN AVENUE	CLEETHORPES	529546.11	407433.36	2018	17/07/2018	67234	Urbis	Teceo 24 LED 500mA	40 Watts	6.00 Metres	Galvanised Steel	
Y	15	STREET LIGHTING	BRIAN AVENUE	CLEETHORPES	529516.47	407431.54	2018	17/07/2018	67235	Urbis	Teceo 24 LED 500mA	40 Watts	6.00 Metres	Galvanised Steel	
Y	16	STREET LIGHTING	BRIAN AVENUE	CLEETHORPES	529499.33	407411.38	2018	17/07/2018	67236	Urbis	Teceo 24 LED 500mA	40 Watts	6.00 Metres	Galvanised Steel	
Y	17	STREET LIGHTING	BRIAN AVENUE	CLEETHORPES	529471.11	407409.57	2018	17/07/2018	67237	Urbis	Teceo 24 LED 500mA	40 Watts	6.00 Metres	Galvanised Steel	
Y	18	STREET LIGHTING	BRIAN AVENUE	CLEETHORPES	529446.92	407385.98	2018	17/07/2018	67238	Urbis	Teceo 24 LED 500mA	40 Watts	6.00 Metres	Galvanised Steel	
Y	19	STREET LIGHTING	BRIAN AVENUE	CLEETHORPES	529415.67	407384.77	2018	17/07/2018	67239	Urbis	Teceo 24 LED 500mA	40 Watts	6.00 Metres	Galvanised Steel	
Y	20	STREET LIGHTING	BRIAN AVENUE	CLEETHORPES	529387.24	407365.42	2018	17/07/2018	67240	Urbis	Teceo 24 LED 500mA	40 Watts	6.00 Metres	Galvanised Steel	
Y	21	STREET LIGHTING	BRIAN AVENUE	CLEETHORPES	529355.75	407371.13	2020	04/05/2020	67863	Urbis	Teceo 24 LED 500mA	40 Watts	6.00 Metres	Galvanised Steel	
Y	1	STREET LIGHTING	CHATSWORTH PLACE	CLEETHORPES	529374.81	407866.36	2009		45669	Urbis	Axia 16 LED 350mA	19 Watts	6.00 Metres	Steel	
Y	2	STREET LIGHTING	CHATSWORTH PLACE	CLEETHORPES	529355.53	407846.22	2009		45670	Urbis	Axia 16 LED 350mA	19 Watts	6.00 Metres	Steel	
Y	3	STREET LIGHTING	CHATSWORTH PLACE	CLEETHORPES	529333.94	407826.59	2009		45671	Urbis	Axia 16 LED 350mA	19 Watts	6.00 Metres	Steel	
Y	4	STREET LIGHTING	CHATSWORTH PLACE	CLEETHORPES	529314.75	407808.27	2009		45672	Urbis	Axia 16 LED 350mA	19 Watts	6.00 Metres	Steel	
Y	5	STREET LIGHTING	CHATSWORTH PLACE	CLEETHORPES	529295.4	407789.26	2009		45673	Urbis	Axia 16 LED 350mA	19 Watts	6.00 Metres	Steel	
Y	6	STREET LIGHTING	CHATSWORTH PLACE	CLEETHORPES	529281.53	407765.26	2009		45674	Urbis	Axia 16 LED 350mA	19 Watts	6.00 Metres	Steel	
Y	7	STREET LIGHTING	CHATSWORTH PLACE	CLEETHORPES	529266.36	407780.29	2009		45675	Urbis	Axia 16 LED 350mA	19 Watts	6.00 Metres	Steel	
Y	8	STREET LIGHTING	CHATSWORTH PLACE	CLEETHORPES	529256.25	407757.32	2009		45676	Urbis	Axia 16 LED 350mA	19 Watts	6.00 Metres	Steel	
Y	1	STREET LIGHTING	CHESTER PLACE	CLEETHORPES	529039.71	408104.37	2015	30/07/2015	45832	Urbis	Axia 16 LED 350mA	19 Watts	6.00 Metres	Galvanised Steel	
Y	2	STREET LIGHTING	CHESTER PLACE	CLEETHORPES	529010.47	408086.46	2015	30/07/2015	45833	Urbis	Axia 16 LED 350mA	19 Watts	6.00 Metres	Galvanised Steel	
Y	1	STREET LIGHTING	COULBECK DRIVE	CLEETHORPES	529650.51	408061.68	2001		46812	Urbis	Axia 16 LED 350mA	19 Watts	5.00 Metres	Galvanised Steel	
Y	2	STREET LIGHTING	COULBECK DRIVE	CLEETHORPES	529644.76	408091.2	2014	15/10/2014	46813	Urbis	Axia 16 LED 350mA	19 Watts	6.00 Metres	Galvanised Steel	
Y	3	STREET LIGHTING	COULBECK DRIVE	CLEETHORPES	529626.28	408120.63	1998		46814	Urbis	Axia 16 LED 350mA	19 Watts	5.00 Metres	Galvanised Steel	
Y	4	STREET LIGHTING	COULBECK DRIVE	CLEETHORPES	529608.18	408134.11	1995		46815	Urbis	Axia 16 LED 350mA	19 Watts	5.00 Metres	Galvanised Steel	
Y	1	STREET LIGHTING	CRIDLING PLACE	CLEETHORPES	529878.05	407952.29	1994		46914	Urbis	Axia 16 LED 350mA	19 Watts	6.00 Metres	Galvanised Steel	
Y	2	STREET LIGHTING	CRIDLING PLACE	CLEETHORPES	529852.61	407933.87	1994		46915	Urbis	Axia 16 LED 350mA	19 Watts	6.00 Metres	Galvanised Steel	
Y	3	STREET LIGHTING	CRIDLING PLACE	CLEETHORPES	529827.04	407923.43	1994		46916	Urbis	Axia 16 LED 350mA	19 Watts	6.00 Metres	Galvanised Steel	
Y	4	STREET LIGHTING	CRIDLING PLACE	CLEETHORPES	529812.23	407909.06	1994		46917	Urbis	Axia 16 LED 350mA	19 Watts	6.00 Metres	Galvanised Steel	
Y	1	STREET LIGHTING	CURZON AVENUE	CLEETHORPES	529477.78	408015.37	2023	21/07/2023	69296	Urbis	AXIA 3.2 32 LED 510mA	50 Watts	8.00 Metres	Galvanised Steel	
Y	2	STREET LIGHTING	CURZON AVENUE	CLEETHORPES	529506.1	408022.27	2023	21/07/2023	69329	Urbis	Teceo 32 LED 500mA	52 Watts	8.00 Metres	Galvanised Steel	
Y	3	STREET LIGHTING	CURZON AVENUE	CLEETHORPES	529542.35	408011.88	2023	21/07/2023	69330	Urbis	Teceo 32 LED 500mA	52 Watts	8.00 Metres	Galvanised Steel	
Y	4	STREET LIGHTING	CURZON AVENUE	CLEETHORPES	529573.09	408025.28	2023	21/07/2023	69331	Urbis	Teceo 32 LED 500mA	52 Watts	8.00 Metres	Galvanised Steel	
Y	5	STREET LIGHTING	CURZON AVENUE	CLEETHORPES	529612.21	408027.65	2023	21/07/2023	69332	Urbis	Teceo 32 LED 500mA	52 Watts	8.00 Metres	Galvanised Steel	
Y	6	STREET LIGHTING	CURZON AVENUE	CLEETHORPES	529637.47	408049.98	2023	21/07/2023	69333	Urbis	AXIA 3.2 24 LED 540mA	41 Watts	8.00 Metres	Galvanised Steel	
Y	7	STREET LIGHTING	CURZON AVENUE	CLEETHORPES	529662.19	408047.07	2023	21/07/2023	69334	Urbis	Teceo 32 LED 500mA	52 Watts	8.00 Metres	Galvanised Steel	
Y	8	STREET LIGHTING	CURZON AVENUE	CLEETHORPES	529695.35	408061.51	2023	21/07/2023	69335	Urbis	Teceo 32 LED 500mA	52 Watts	8.00 Metres	Galvanised Steel	
Y	9	STREET LIGHTING	CURZON AVENUE	CLEETHORPES	529726.18	408088.09	2023	21/07/2023	69336	Urbis	Teceo 32 LED 500mA	52 Watts	8.00 Metres	Galvanised Steel	
Y	10	STREET LIGHTING	CURZON AVENUE	CLEETHORPES	529759.47	408100.8	2023	21/07/2023	69337	Urbis	Teceo 32 LED 500mA	52 Watts	8.00 Metres	Galvanised Steel	
Y	11	STREET LIGHTING	CURZON AVENUE	CLEETHORPES	529794.32	408102.16	2023	21/07/2023	69338	Urbis	Teceo 32 LED 500mA	52 Watts	8.00 Metres	Galvanised Steel	
Y	12	STREET LIGHTING	CURZON AVENUE	CLEETHORPES	529824.75	408125.18	2023	21/07/2023	69339	Urbis	Teceo 32 LED 500mA	52 Watts	8.00 Metres	Galvanised Steel	
Y	13	STREET LIGHTING	CURZON AVENUE	CLEETHORPES	529858.27	408124.73	2023	21/07/2023	69340	Urbis	Teceo 32 LED 500mA	52 Watts	8.00 Metres	Galvanised Steel	
Y	14	STREET LIGHTING	CURZON AVENUE	CLEETHORPES	529893.9	408148.4	2023	21/07/2023	69341	Urbis	Teceo 32 LED 500mA	52 Watts	8.00 Metres	Galvanised Steel	
Y	1	STREET LIGHTING	CURZON COURT	CLEETHORPES	529579.65	408006.71	2014	15/11/2014	47195	Urbis	Axia 16 LED 350mA	19 Watts	6.00 Metres	Galvanised Steel	
Y	2	STREET LIGHTING	CURZON COURT	CLEETHORPES	529576.87	407973.23	2014	15/11/2014	47196	Urbis	Axia 16 LED 350mA	19 Watts	6.00 Metres	Galvanised Steel	
Y	3	STREET LIGHTING	CURZON COURT	CLEETHORPES	529587.76	407942.79	1965		47197	Urbis	Axia 16 LED 350mA	19 Watts	6.00 Metres	Galvanised Steel	
Y	4	STREET LIGHTING	CURZON COURT	CLEETHORPES	529583.05	407914.16	2014	15/11/2014	47198	Urbis	Axia 16 LED 350mA	19 Watts	6.00 Metres	Galvanised Steel	
Y	5	STREET LIGHTING	CURZON COURT	CLEETHORPES	529590.79	407894.63	2014	15/11/2014	47199	Urbis	Axia 16 LED 350mA	19 Watts	6.00 Metres	Galvanised Steel	
Y	6	STREET LIGHTING	CURZON COURT	CLEETHORPES	529568.36	407895.11	1965		47200	Urbis	Axia 16 LED 350mA	19 Watts	5.00 Metres	Steel	
Y	7	STREET LIGHTING	CURZON COURT	CLEETHORPES	529557.99	407896.82	1965		47201	Urbis	Axia 16 LED 350mA	19 Watts	5.00 Metres	Galvanised Steel	
Y	8	STREET LIGHTING	CURZON COURT	CLEETHORPES	529550.9	407913.59	1965		47202	Urbis	Axia 16 LED 350mA	19 Watts	5.00 Metres	Galvanised Steel	
Y	9	STREET LIGHTING	CURZON COURT	CLEETHORPES	529539.38	407897.84	1965		47203	Urbis	Axia 16 LED 350mA	19 Watts	5.00 Metres	Galvanised Steel	
Y	1	STREET LIGHTING	DUDLEY PLACE	CLEETHORPES	529920.06	407883.8	2014	15/10/2014	47576	1 Urbis LED	Axia 16 LED 500mA	28 Watts	6.00 Metres	Galvanised Steel	
Y	2	STREET LIGHTING	DUDLEY PLACE	CLEETHORPES	529876.4	407858.48	2014	15/10/2014	47577	1 Urbis LED	Axia 16 LED 500mA	28 Watts	6.00 Metres	Galvanised Steel	
Y	3	STREET LIGHTING	DUDLEY PLACE	CLEETHORPES	529860.45	407837.92	1989		47578	1 Urbis LED	Axia 16 LED 500mA	28 Watts	6.00 Metres	Galvanised Steel	
Y	4	STREET LIGHTING	DUDLEY PLACE	CLEETHORPES	529829.94	407826.27	1988		47579	1 Urbis LED	Axia 16 LED 500mA	28 Watts	5.00 Metres	Galvanised Steel	
Y	5	STREET LIGHTING	DUDLEY PLACE	CLEETHORPES	529798.05	407812.92	2014	15/10/2014	47580	1 Urbis LED	Axia 16 LED 500mA	28 Watts	6.00 Metres	Steel	
Y	1	STREET LIGHTING	DURHAM ROAD	CLEETHORPES	529239.19	407964.07	2018	17/07/2018	67225	Urbis	Teceo 24 LED 500mA	40 Watts	6.00 Metres	Galvanised Steel	
Y	2	STREET LIGHTING	DURHAM ROAD	CLEETHORPES	529249.84	407992.14	2018	17/07/2018	67226	Urbis	Teceo 24 LED 500mA	40 Watts	6.00 Metres	Galvanised Steel	
Y	3	STREET LIGHTING	DURHAM ROAD	CLEETHORPES	529283.74	407998.95	2018	17/07/2018	67227	Urbis	Teceo 24 LED 500mA	40 Watts	6.00 Metres	Galvanised Steel	
Y	1	STREET LIGHTING	KENILWORTH ROAD	CLEETHORPES	529934.17	407718.04	2005		51534	1 Urbis LED	Axia 16 LED 500mA	28 Watts	6.00 Metres	Stainless Steel	
Y	2	STREET LIGHTING	KENILWORTH ROAD	CLEETHORPES	529913.71	407749.1	2015	30/07/2015	51535	1 Urbis LED	Axia 16 LED 500mA	28 Watts	6.00 Metres	Galvanised Steel	
Y	1	STREET LIGHTING	LINCOLN ROAD	CLEETHORPES	529101.84	408084.01	1979		52559	1 Urbis LED	Teceo 24 LED 500mA	40 Watts	5.00 Metres	Galvanised Steel	
Y	2	STREET LIGHTING	LINCOLN ROAD	CLEETHORPES	529128.88	408100.42	2018	17/07/2018	67220	Urbis	Teceo 24 LED 500mA	40 Watts	6.00 Metres	Galvanised Steel	
Y	3	STREET LIGHTING	LINCOLN ROAD	CLEETHORPES	529167.57	408125.41	2018	17/07/2018	67221	Urbis	Teceo 24 LED 500mA	40 Watts	6.00 Metres	Galvanised Steel	
Y	1	STREET LIGHTING	MONTGOMERY ROAD	CLEETHORPES	529596.15	408423.88	2018	16/08/2018	66984	Urbis	Teceo 24 LED 500mA	40 Watts	6.00 Metres	Galvanised Steel	
Y	2	STREET LIGHTING	MONTGOMERY ROAD	CLEETHORPES	529617.64	408385.33	1937	14/06/2002	53776	1 Urbis LED	Teceo 24 LED 500mA	40 Watts	6.00 Metres	Galvanised Steel	
Y	3	STREET LIGHTING	MONTGOMERY ROAD	CLEETHORPES	529613.51	408346.11	2018	16/08/2018	67118	Urbis	Teceo 24 LED 500mA	40 Watts	6.00 Metres	Galvanised Steel	
Y	4	STREET LIGHTING	MONTGOMERY ROAD	CLEETHORPES	529626.88	408312.53	1995		53778	1 Urbis LED	Teceo 24 LED 500mA	40 Watts	6.00 Metres	Galvanised Steel	
Y	5	STREET LIGHTING	MONTGOMERY ROAD	CLEETHORPES	529625.73	408280.55	2018	16/08/2018	67119	Urbis	Teceo 24 LED 500mA	40 Watts	6.00 Metres	Galvanised Steel	
Y	6	STREET LIGHTING	MONTGOMERY ROAD	CLEETHORPES	529655.58	408309.04	2018	16/08/2018	67120	Urbis	Teceo 24 LED 500mA	40 Watts	6.00 Metres	Galvanised Steel	
Y	7	STREET LIGHTING	MONTGOMERY ROAD	CLEETHORPES	529695.66	408327.66	2018	16/08/2018	67121	Urbis	Teceo 24 LED 500mA	40 Watts	6.00 Metres	Galvanised Steel	
Y	8	STREET LIGHTING	MONTGOMERY ROAD	CLEETHORPES	529733.09	408357.06	2018	16/08/2018	67122	Urbis	Teceo 24 LED 500mA	40 Watts	6.00 Metres	Galvanised Steel	
Y	9	STREET LIGHTING	MONTGOMERY ROAD	CLEETHORPES	529759.35	408389.65	1978		53783	1 Urbis LED	Teceo 24 LED 500mA	40 Watts	5.00 Metres	Galvanised Steel	
Y	1	STREET LIGHTING	NORMANDY ROAD	CLEETHORPES	529535.49	408429.99	2018	05/10/2018	66983	Urbis	Ampera 16 LED 500mA	28 Watts	6.00 Metres	Galvanised Steel	
Y	2	STREET LIGHTING	NORMANDY ROAD	CLEETHORPES	529564.52	408432.3	1995		54202	1 Urbis LED	Teceo 16 LED 500mA	28 Watts	6.00 Metres	Galvanised Steel	
Y	3	STREET LIGHTING	NORMANDY ROAD	CLEETHORPES	529588.11	408455.71	2018	05/10/2018	67006	Urbis	Ampera 16 LED 500mA	28 Watts	6.00 Metres	Galvanised Steel	
Y	4	STREET LIGHTING	NORMANDY ROAD	CLEETHORPES	529626.72	408464.85	2018	14/06/2018	54204	1 Urbis LED	Teceo 16 LED 500mA	28 Watts	6.00 Metres	Galvanised Steel	
Y	5	STREET LIGHTING	NORMANDY ROAD	CLEETHORPES	529658.75	408489.22	2018	05/10/2018	54205	1 Urbis LED	Teceo 16 LED 500mA	28 Watts	6.00 Metres	Galvanised Steel	
Y	6	STREET LIGHTING	NORMANDY ROAD	CLEETHORPES	529702.8	408499.79	2012		54206	1 Urbis LED	Teceo 16 LED 500mA	28 Watts	6.00 Metres	Galvanised Steel	
Y	7	STREET LIGHTING	NORMANDY ROAD	CLEETHORPES	529733.53	408477.53	2018	05/10/2018	67007	Urbis	Ampera 16 LED 500mA	28 Watts	6.00 Metres	Galvanised Steel	
Y	8	STREET LIGHTING	NORMANDY ROAD	CLEETHORPES	529750.16	408436.91	2018	05/10/2018	67008	Urbis	Ampera 16 LED 500mA	28 Watts	6.00 Metres	Galvanised Steel	
Y	9	STREET LIGHTING	NORMANDY ROAD	CLEETHORPES	529784.7	408404.29	2004		54209	1 Urbis LED	Teceo 16 LED 500mA	28 Watts	6.00 Metres	Stainless Steel	

Y	1	STREET LIGHTING	PHILIP GROVE	CLEETHORPES	529580.86	407544.95	1988		55409	Urbis	Axia 16 LED 350mA	19 Watts	5.00 Metres	Galvanised Steel	
Y	2	STREET LIGHTING	PHILIP GROVE	CLEETHORPES	529612.63	407551.34	1988		55410	Urbis	Axia 16 LED 350mA	19 Watts	5.00 Metres	Galvanised Steel	
Y	3	STREET LIGHTING	PHILIP GROVE	CLEETHORPES	529637.82	407564.31	1988		55411	Urbis	Axia 16 LED 350mA	19 Watts	5.00 Metres	Galvanised Steel	
Y	4	STREET LIGHTING	PHILIP GROVE	CLEETHORPES	529658.45	407579.75	1988		55412	Urbis	Axia 16 LED 350mA	19 Watts	5.00 Metres	Galvanised Steel	
Y	5	STREET LIGHTING	PHILIP GROVE	CLEETHORPES	529665.54	407611.08	1988		55413	Urbis	Axia 16 LED 350mA	19 Watts	5.00 Metres	Galvanised Steel	
Y	6	STREET LIGHTING	PHILIP GROVE	CLEETHORPES	529647.95	407636.33	1988		55414	Urbis	Axia 16 LED 350mA	19 Watts	5.00 Metres	Galvanised Steel	
Y	7	STREET LIGHTING	PHILIP GROVE	CLEETHORPES	529617.57	407642.15	1988		55415	Urbis	Axia 16 LED 350mA	19 Watts	5.00 Metres	Galvanised Steel	
Y	8	STREET LIGHTING	PHILIP GROVE	CLEETHORPES	529596.81	407662.09	1988		55416	Urbis	Axia 16 LED 350mA	19 Watts	5.00 Metres	Galvanised Steel	
Y	9	STREET LIGHTING	PHILIP GROVE	CLEETHORPES	529567.19	407667.34	1988		55417	Urbis	Axia 16 LED 350mA	19 Watts	5.00 Metres	Galvanised Steel	
Y	10	STREET LIGHTING	PHILIP GROVE	CLEETHORPES	529543.52	407651.2	1989		55418	Urbis	Axia 16 LED 350mA	19 Watts	5.00 Metres	Galvanised Steel	
Y	1	STREET LIGHTING	SCHOOL WALK	CLEETHORPES	529100.36	408153.18	2018	17/07/2018	67228	Urbis	Teceo 24 LED 500mA	40 Watts	6.00 Metres	Galvanised Steel	
Y	2	STREET LIGHTING	SCHOOL WALK	CLEETHORPES	529118.51	408185.77	2018	17/07/2018	67229	Urbis	Teceo 24 LED 500mA	40 Watts	6.00 Metres	Galvanised Steel	
Y	3	STREET LIGHTING	SCHOOL WALK	CLEETHORPES	529151.61	408183.49	2015	09/03/2015	67230	Urbis	Axia 16 LED 500mA	28 Watts	6.00 Metres	Galvanised Steel	
Y	4	STREET LIGHTING	SCHOOL WALK	CLEETHORPES	529191.73	408156.46	2003		56750	1 Urbis LED	Axia 16 LED 500mA	28 Watts	6.00 Metres	Stainless Steel	
Y	5	STREET LIGHTING	SCHOOL WALK	CLEETHORPES	529217.99	408120.96	2018	17/07/2018	67231	Urbis	Teceo 24 LED 500mA	40 Watts	6.00 Metres	Galvanised Steel	
Y	6	STREET LIGHTING	SCHOOL WALK	CLEETHORPES	529225.36	408067.01	2013		67233	Urbis	Teceo 24 LED 500mA	40 Watts	6.00 Metres	Steel	
Y	7	STREET LIGHTING	SCHOOL WALK	CLEETHORPES	529254.63	408094.25	2018	17/07/2018	67232	Urbis	Teceo 24 LED 500mA	40 Watts	6.00 Metres	Galvanised Steel	
Y	8	STREET LIGHTING	SCHOOL WALK	CLEETHORPES	529277.43	408059	1987		56754	1 Urbis LED	Axia 16 LED 500mA	28 Watts	5.00 Metres	Galvanised Steel	
Y	9	STREET LIGHTING	SCHOOL WALK	CLEETHORPES	529316	408032	2001		56755	1 Urbis LED	Axia 16 LED 500mA	28 Watts	6.00 Metres	Galvanised Steel	
Y	1	STREET LIGHTING	STEVENSON PLACE	CLEETHORPES	529679.09	408355.83	2018	16/08/2018	66982	Urbis	Ampera 16 LED 500mA	28 Watts	6.00 Metres	Galvanised Steel	
Y	2	STREET LIGHTING	STEVENSON PLACE	CLEETHORPES	529670.91	408393.84	2018	05/10/2018	67002	Urbis	Ampera 16 LED 500mA	28 Watts	6.00 Metres	Galvanised Steel	
Y	3	STREET LIGHTING	STEVENSON PLACE	CLEETHORPES	529676.87	408425.19	2018	05/10/2018	67003	Urbis	Ampera 16 LED 500mA	28 Watts	6.00 Metres	Galvanised Steel	
Y	4	STREET LIGHTING	STEVENSON PLACE	CLEETHORPES	529698.37	408414.37	2018	05/10/2018	67004	Urbis	Ampera 16 LED 500mA	28 Watts	6.00 Metres	Galvanised Steel	
Y	5	STREET LIGHTING	STEVENSON PLACE	CLEETHORPES	529720.56	408383.85	2018	05/10/2018	67005	Urbis	Ampera 16 LED 500mA	28 Watts	6.00 Metres	Galvanised Steel	
Y	1	STREET LIGHTING	TERRINGTON PLACE	CLEETHORPES	529677.57	407815.88	1988		58857	Urbis	Axia 16 LED 350mA	19 Watts	5.00 Metres	Galvanised Steel	
Y	2	STREET LIGHTING	TERRINGTON PLACE	CLEETHORPES	529701.24	407823.66	1989		58858	Urbis	Axia 16 LED 350mA	19 Watts	5.00 Metres	Galvanised Steel	
Y	3	STREET LIGHTING	TERRINGTON PLACE	CLEETHORPES	529722	407848.41	1988		58859	Urbis	Axia 16 LED 350mA	19 Watts	5.00 Metres	Galvanised Steel	
Y	4	STREET LIGHTING	TERRINGTON PLACE	CLEETHORPES	529749.34	407858.73	1988		58860	Urbis	Axia 16 LED 350mA	19 Watts	5.00 Metres	Galvanised Steel	
Y	5	STREET LIGHTING	TERRINGTON PLACE	CLEETHORPES	529765.04	407874.61	1988		58861	Urbis	Axia 16 LED 350mA	19 Watts	5.00 Metres	Galvanised Steel	
Y	1	STREET LIGHTING	WARWICK ROAD	CLEETHORPES	529563.63	407827.91	1988		59822	1 Urbis LED	Teceo 16 LED 500mA	28 Watts	6.00 Metres	Galvanised Steel	
Y	2	STREET LIGHTING	WARWICK ROAD	CLEETHORPES	529600	407842	1988		59823	1 Urbis LED	Teceo 16 LED 500mA	28 Watts	6.00 Metres	Galvanised Steel	
Y	3	STREET LIGHTING	WARWICK ROAD	CLEETHORPES	529618	407865	1988		59824	1 Urbis LED	Teceo 16 LED 500mA	28 Watts	6.00 Metres	Galvanised Steel	
Y	4	STREET LIGHTING	WARWICK ROAD	CLEETHORPES	529649.44	407873.54	1988		59825	1 Urbis LED	Teceo 16 LED 500mA	28 Watts	6.00 Metres	Galvanised Steel	
Y	5	STREET LIGHTING	WARWICK ROAD	CLEETHORPES	529667.04	407900.69	1988		59826	1 Urbis LED	Teceo 16 LED 500mA	28 Watts	6.00 Metres	Galvanised Steel	
Y	6	STREET LIGHTING	WARWICK ROAD	CLEETHORPES	529695.52	407908.53	1988		59827	1 Urbis LED	Teceo 16 LED 500mA	28 Watts	6.00 Metres	Galvanised Steel	
Y	7	STREET LIGHTING	WARWICK ROAD	CLEETHORPES	529717.54	407938.34	1988		59828	1 Urbis LED	Teceo 16 LED 500mA	28 Watts	6.00 Metres	Galvanised Steel	
Y	8	STREET LIGHTING	WARWICK ROAD	CLEETHORPES	529742.6	407957.52	1988		59829	1 Urbis LED	Teceo 16 LED 500mA	28 Watts	6.00 Metres	Galvanised Steel	
Y	9	STREET LIGHTING	WARWICK ROAD	CLEETHORPES	529775.51	407969.35	1988		59830	1 Urbis LED	Teceo 16 LED 500mA	28 Watts	6.00 Metres	Galvanised Steel	
Y	10	STREET LIGHTING	WARWICK ROAD	CLEETHORPES	529793.11	407995.93	1988		59831	1 Urbis LED	Teceo 16 LED 500mA	28 Watts	6.00 Metres	Galvanised Steel	
Y	11	STREET LIGHTING	WARWICK ROAD	CLEETHORPES	529823.52	408005.67	1988		59832	1 Urbis LED	Teceo 16 LED 500mA	28 Watts	6.00 Metres	Galvanised Steel	
Y	12	STREET LIGHTING	WARWICK ROAD	CLEETHORPES	529837.32	408029.4	1988		59833	1 Urbis LED	Teceo 16 LED 500mA	28 Watts	6.00 Metres	Galvanised Steel	
Y	13	STREET LIGHTING	WARWICK ROAD	CLEETHORPES	529872.76	408043.39	1988		59834	1 Urbis LED	Teceo 16 LED 500mA	28 Watts	6.00 Metres	Galvanised Steel	
Y	14	STREET LIGHTING	WARWICK ROAD	CLEETHORPES	529891.62	408068.93	2014	15/11/2014	59835	1 Urbis LED	Teceo 16 LED 500mA	28 Watts	6.00 Metres	Galvanised Steel	
Y	15	STREET LIGHTING	WARWICK ROAD	CLEETHORPES	529901.51	408100.05	2014	15/11/2014	59836	1 Urbis LED	Teceo 16 LED 500mA	28 Watts	6.00 Metres	Galvanised Steel	
Y	16	STREET LIGHTING	WARWICK ROAD	CLEETHORPES	529901.89	408128.98	2000		59837	1 Urbis LED	Teceo 16 LED 500mA	28 Watts	6.00 Metres	Galvanised Steel	
Y	1	STREET LIGHTING	WINDSOR ROAD	CLEETHORPES	529054.36	408157.7	2008		60890	1 Urbis LED	Teceo 16 LED 500mA	28 Watts	6.00 Metres	Steel	
Y	2	STREET LIGHTING	WINDSOR ROAD	CLEETHORPES	529057.81	408132.88	2008		60891	1 Urbis LED	Teceo 16 LED 500mA	28 Watts	6.00 Metres	Steel	
Y	3	STREET LIGHTING	WINDSOR ROAD	CLEETHORPES	529074.79	408107.55	2008		60892	1 Urbis LED	Teceo 16 LED 500mA	28 Watts	6.00 Metres	Steel	
Y	4	STREET LIGHTING	WINDSOR ROAD	CLEETHORPES	529069.41	408068.72	2008		60893	1 Urbis LED	Teceo 16 LED 500mA	28 Watts	6.00 Metres	Steel	
Y	5	STREET LIGHTING	WINDSOR ROAD	CLEETHORPES	529090.09	408041.49	2008		60894	1 Urbis LED	Teceo 16 LED 500mA	28 Watts	6.00 Metres	Steel	
Y	6	STREET LIGHTING	WINDSOR ROAD	CLEETHORPES	529095.72	408008.64	2008		60895	1 Urbis LED	Teceo 16 LED 500mA	28 Watts	6.00 Metres	Steel	
Y	7	STREET LIGHTING	WINDSOR ROAD	CLEETHORPES	529124.33	407992.05	2008		60896	1 Urbis LED	Teceo 16 LED 500mA	28 Watts	6.00 Metres	Steel	
Y	8	STREET LIGHTING	WINDSOR ROAD	CLEETHORPES	529141.22	407964.51	2008		60897	1 Urbis LED	Teceo 16 LED 500mA	28 Watts	6.00 Metres	Steel	
Y	9	STREET LIGHTING	WINDSOR ROAD	CLEETHORPES	529175.04	407959.04	2008		60898	1 Urbis LED	Teceo 16 LED 500mA	28 Watts	6.00 Metres	Steel	
Y	10	STREET LIGHTING	WINDSOR ROAD	CLEETHORPES	529206.15	407949.84	2008		60899	1 Urbis LED	Teceo 16 LED 500mA	28 Watts	6.00 Metres	Steel	
Y	11	STREET LIGHTING	WINDSOR ROAD	CLEETHORPES	529234.46	407931.51	2008		60900	1 Urbis LED	Teceo 16 LED 500mA	28 Watts	6.00 Metres	Steel	
Y	12	STREET LIGHTING	WINDSOR ROAD	CLEETHORPES	529260.48	407910.34	2008		60901	1 Urbis LED	Teceo 16 LED 500mA	28 Watts	6.00 Metres	Steel	
Y	1	STREET LIGHTING	YORK PLACE	CLEETHORPES	529183	407931	2009		61419	Urbis	Axia 16 LED 350mA	19 Watts	6.00 Metres	Steel	
Y	2	STREET LIGHTING	YORK PLACE	CLEETHORPES	529175	407904	2009		61420	Urbis	Axia 16 LED 350mA	19 Watts	6.00 Metres	Steel	
Y	1	STREET LIGHTING	DAVENPORT DRIVE	CLEETHORPES	529498.71	408485.64	1990		47334	1 Urbis LED	Teceo 40 LED 500mA	64 Watts	8.00 Metres	Galvanised Steel	
Y	2	STREET LIGHTING	DAVENPORT DRIVE	CLEETHORPES	529491.37	408462.04	1990		47335	1 Urbis LED	Teceo 40 LED 500mA	64 Watts	8.00 Metres	Galvanised Steel	
Y	3	STREET LIGHTING	DAVENPORT DRIVE	CLEETHORPES	529501.06	408443.84	1990		47336	Urbis	AXIA 3.2 32 LED 510mA	50 Watts	8.00 Metres	Galvanised Steel	
Y	4	STREET LIGHTING	DAVENPORT DRIVE	CLEETHORPES	529525.17	408432.99	1990		47337	1 Urbis LED	Teceo 40 LED 500mA	64 Watts	8.00 Metres	Galvanised Steel	
Y	5	STREET LIGHTING	DAVENPORT DRIVE	CLEETHORPES	529519.92	408405.45	1990		47338	1 Urbis LED	Teceo 40 LED 500mA	64 Watts	8.00 Metres	Galvanised Steel	
Y	6	STREET LIGHTING	DAVENPORT DRIVE	CLEETHORPES	529537.64	408395.83	1990		47339	1 Urbis LED	Teceo 40 LED 500mA	64 Watts	8.00 Metres	Galvanised Steel	
Y	7	STREET LIGHTING	DAVENPORT DRIVE	CLEETHORPES	529529.51	408365.33	2019	29/03/2019	67358	Urbis	AXIA 3.2 32 LED 510mA	50 Watts	8.00 Metres	Galvanised Steel	
Y	8	STREET LIGHTING	DAVENPORT DRIVE	CLEETHORPES	529548.02	408342.6	1990		47341	Urbis	AXIA 3.2 32 LED 510mA	50 Watts	8.00 Metres	Galvanised Steel	
Y	9	STREET LIGHTING	DAVENPORT DRIVE	CLEETHORPES	529536.25	408306.15	1990		47342	1 Urbis LED	Teceo 40 LED 500mA	64 Watts	8.00 Metres	Galvanised Steel	
Y	10	STREET LIGHTING	DAVENPORT DRIVE	CLEETHORPES	529551.44	408285.26	1990		47343	1 Urbis LED	Teceo 40 LED 500mA	64 Watts	8.00 Metres	Galvanised Steel	
Y	11	STREET LIGHTING	DAVENPORT DRIVE	CLEETHORPES	529534.85	408259.06	1990		47344	1 Urbis LED	Teceo 40 LED 500mA	64 Watts	8.00 Metres	Galvanised Steel	
Y	12	STREET LIGHTING	DAVENPORT DRIVE	CLEETHORPES	529546.25	408233.49	1990		47345	1 Urbis LED	Teceo 40 LED 500mA	64 Watts	8.00 Metres	Galvanised Steel	
Y	13	STREET LIGHTING	DAVENPORT DRIVE	CLEETHORPES	529525.36	408209	1990		47346	1 Urbis LED	Teceo 40 LED 500mA	64 Watts	8.00 Metres	Galvanised Steel	
Y	14	STREET LIGHTING	DAVENPORT DRIVE	CLEETHORPES	529533.08	408181.97	1990		47347	1 Urbis LED	Teceo 40 LED 500mA	64 Watts	8.00 Metres	Galvanised Steel	
Y	15	STREET LIGHTING	DAVENPORT DRIVE	CLEETHORPES	529507.89	408158.36	1990		47348	1 Urbis LED	Teceo 40 LED 500mA	64 Watts	8.00 Metres	Galvanised Steel	
Y	16	STREET LIGHTING	DAVENPORT DRIVE	CLEETHORPES	529509.16	408127.35	1990		47349	Urbis	AXIA 3.2 32 LED 510mA	50 Watts	8.00 Metres	Galvanised Steel	
Y	17	STREET LIGHTING	DAVENPORT DRIVE	CLEETHORPES	529484.35	408109.44	1990		47350	1 Urbis LED	Teceo 40 LED 500mA	64 Watts	8.00 Metres	Galvanised Steel	
Y	18	STREET LIGHTING	DAVENPORT DRIVE	CLEETHORPES	529481.56	408075.45	1990		47351	1 Urbis LED	Teceo 40 LED 500mA	64 Watts	8.00 Metres	Galvanised Steel	
Y	19	STREET LIGHTING	DAVENPORT DRIVE	CLEETHORPES	529459.41	408067.29	1990		47352	Urbis	AXIA 3.2 32 LED 510mA	50 Watts	8.00 Metres	Galvanised Steel	
Y	20	STREET LIGHTING	DAVENPORT DRIVE	CLEETHORPES	529403.65	408004.01	1990		47353	1 Urbis LED	Teceo 40 LED 500mA	64 Watts	8.00 Metres	Galvanised Steel	
Y	21	STREET LIGHTING	DAVENPORT DRIVE	CLEETHORPES	529367.57	407991.16	1990		47354	1 Urbis LED	Teceo 40 LED 500mA	64 Watts	8.00 Metres	Galvanised Steel	
Y	22	STREET LIGHTING	DAVENPORT DRIVE	CLEETHORPES	529348.84	407952.93	1990		47355	1 Urbis LED	Teceo 40 LED 500mA	64 Watts	8.00 Metres	Galvanised Steel	
Y	23	STREET LIGHTING	DAVENPORT DRIVE	CLEETHORPES	529316.31	407942.11	1990		47356	1 Urbis LED	Teceo 40 LED 500mA	64 Watts	8.00 Metres	Galvanised Steel	
Y	24	STREET LIGHTING	DAVENPORT DRIVE	CLEETHORPES	529295.55	407922.05	1990		47357	1 Urbis LED	Teceo 40 LED 500mA	64 Watts	8.00 Metres	Galvanised Steel	
Y	25	STREET LIGHTING	DAVENPORT DRIVE	CLEETHORPES	529291.62	407886.03	1990		47358	1 Urbis LED	Teceo 40 LED 500mA	64 Watts	8.00 Metres	Galvanised Steel	
Y	26	STREET LIGHTING	DAVENPORT DRIVE	CLEETHORPES	529260.48	407889.13	1990		47359	1 Urbis LED	Teceo 40 LED 500mA	64 Watts	8.00 Metres	Galvanised Steel	
Y	27	STREET LIGHTING	DAVENPORT DRIVE	CLEETHORPES	529244.79	407854.07	1990		47360	1 Urbis LED	Teceo 40 LED 500mA	64 Watts	8.00 Metres	Galvanised Steel	
Y	28	STREET LIGHTING	DAVENPORT DRIVE	CLEETHORPES	529210.99	407841.98	1990		47361	1 Urbis LED	Teceo 40 LED 500mA	64 Watts	8.00 Metres	Galvanised Steel	
Y	29	STREET LIGHTING	DAVENPORT DRIVE	CLEETHORPES	529193.78	407805.89	1990		47362	1 Urbis LED	Teceo 40 LED 500mA	64 Watts	8.00 Metres	Galvanised Steel	
Y	30	STREET LIGHTING	DAVENPORT DRIVE	CLEETHORPES	529158.03	407792.21	2008		47363	1 Urbis LED	Teceo 48 LED 500mA	79 Watts	10.00 Metres	Steel	
Y	1	STREET LIGHTING	LADY FRANCES CRESCENT	CLEETHORPES	529508.31	408410.32	1990		52077	Urbis	Axia 16 LED 350mA	19 Watts	6.00 Metres	Galvanised Steel	
Y	2	STREET LIGHTING	LADY FRANCES CRESCENT	CLEETHORPES	529475.27	408403.93	1990		52078	Urbis	Axia 16 LED 350mA	19 Watts	6.00 Metres	Galvanised Steel	
Y	3	STREET LIGHTING	LADY FRANCES CRESCENT	CLEETHORPES	529454.77	408389.31	1990		52079	Urbis	Axia 16 LED 350mA	19 Watts	6.00 Metres	Galvanised Steel	
Y	4	STREET LIGHTING	LADY FRANCES CRESCENT	CLEETHORPES	529460.98	408366.54	1990		52080	Urbis	Axia 16 LED 350mA	19 Watts	6.00 Metres	Galvanised Steel	
Y	5	STREET LIGHTING	LADY FRANCES CRESCENT	CLEETHORPES	529458.44	408341.54	1990		52081	Urbis	Axia 16 LED 350mA	19 Watts	6.00 Metres	Galvanised Steel	
Y	6	STREET LIGHTING	LADY FRANCES CRESCENT	CLEETHORPES	529471.61	408316.54	1990		52082	Urbis	Axia 16 LED 350mA	19 Watts	6.00 Metres	Galvanised Steel	
Y	7	STREET LIGHTING	LADY FRANCES CRESCENT	CLEETHORPES	529472.49	408292.17	1990		52083	Urbis	Axia 16 LED 350mA	19 Watts	6.00 Metres	Galvanised Steel	
Y	8	STREET LIGHTING	LADY FRANCES CRESCENT	CLEETHORPES	529471.1	408258.5	1990		52084	Urbis	Axia 16 LED 350mA	19 Watts	6.00 Metres	Galvanised Steel	
Y	9	STREET LIGHTING	LADY FRANCES CRESCENT	CLEETHORPES	529460.47	408232.36	1990		52085	Urbis	Axia 16 LED 350mA	19 Watts	6.00 Metres	Galvanised Steel	
Y	10	STREET LIGHTING	LADY FRANCES CRESCENT	CLEETHORPES	529438.57	408241.92	1990		52086	Urbis	Axia 16 LED 350mA	19 Watts	6.00 Metres	Galvanised Steel	
Y	11	STREET LIGHTING	LADY FRANCES CRESCENT	CLEETHORPES	529424.01	408270.78	1990		52087	Urbis	Axia 16 LED 350mA	19 Watts	6.00 Metres	Galvanised Steel	
Y	12	STREET LIGHTING	LADY FRANCES CRESCENT	CLEETHORPES	529404.27	408292.61	1990		52088	Urbis	Axia 16 LED 350mA	19 Watts	6.00 Metres	Galvanised Steel	
Y	13	STREET LIGHTING	LADY FRANCES CRESCENT	CLEETHORPES	529380.09	408306.6	1990		52089	Urbis	Axia 16 LED 350mA	19 Watts	6.00 Metres	Galvanised Steel	
Y	14	STREET LIGHTING	LADY FRANCES CRESCENT	CLEETHORPES	529385.4	408334.63	1990		52090	Urbis	Axia 16 LED 350mA	19 Watts	6.00 Metres	Galvanised Steel	
Y	15	STREET LIGHTING	LADY FRANCES CRESCENT	CLEETHORPES	529412.74	408345.01	1990		52091	Urbis	Axia 16 LED 350mA	19 Watts	6.00 Metres	Galvanised Steel	
Y	16	STREET LIGHTING	LADY FRANCES CRESCENT	CLEETHORPES	529431.22	408370.71	1990		52092	Urbis	Axia 16 LED 350mA	19 Watts	6.00 Metres	Galvanised Steel	
Y	1	STREET LIGHTING	PENSHURST ROAD	CLEETHORPES	529636.31	407848.09	2015	30/07/2015	55278	1 Urbis LED	Axia 16 LED 500mA	28 Watts	6.00 Metres	Galvanised Steel	
Y	2	STREET LIGHTING	PENSHURST ROAD	CLEETHORPES	529644.91	407820.56	2015	30/07/2015	55279	1 Urbis LED	Axia 16 LED 500mA	28 Watts	6.00 Metres	Galvanised Steel	
Y	3	STREET LIGHTING	PENSHURST ROAD	CLEETHORPES	529663.27	407800.63	2015	30/07/2015	55280	1 Urbis LED	Axia 16 LED 500mA	28 Watts	6.00 Metres	Galvanised Steel	
Y	4	STREET LIGHTING	PENSHURST ROAD	CLEETHORPES	529681.37	407784.17	2015	30/07/2015	55281	Urbis	Axia 16 LED 350mA	19 Watts	6.00 Metres	Galvanised Steel	
Y	5	STREET LIGHTING	PENSHURST ROAD	CLEETHORPES	529717.44	407772.21	2015	30/07/2015	55282	1 Urbis LED	Axia 16 LED 500mA	28 Watts	6.00 Metres	Galvanised Steel	

Y	6	STREET LIGHTING	PENSHURST ROAD	CLEETHORPES	529742.76	407750.25	2015	30/07/2015	55283	1 Urbis LED	Axia 16 LED 500mA	28 Watts	6.00 Metres	Galvanised Steel	
Y	7	STREET LIGHTING	PENSHURST ROAD	CLEETHORPES	529778.71	407750.69	2015	30/07/2015	55284	1 Urbis LED	Axia 16 LED 500mA	28 Watts	6.00 Metres	Galvanised Steel	
Y	8	STREET LIGHTING	PENSHURST ROAD	CLEETHORPES	529811.36	407738.86	2015	30/07/2015	55285	1 Urbis LED	Axia 16 LED 500mA	28 Watts	6.00 Metres	Galvanised Steel	
Y	9	STREET LIGHTING	PENSHURST ROAD	CLEETHORPES	529845.29	407749.05	2015	30/07/2015	55286	1 Urbis LED	Axia 16 LED 500mA	28 Watts	6.00 Metres	Galvanised Steel	
Y	10	STREET LIGHTING	PENSHURST ROAD	CLEETHORPES	529877.56	407749.87	2015	30/07/2015	55287	1 Urbis LED	Axia 16 LED 500mA	28 Watts	6.00 Metres	Galvanised Steel	
Y	11	STREET LIGHTING	PENSHURST ROAD	CLEETHORPES	529898.52	407776.57	2015	30/07/2015	55288	1 Urbis LED	Axia 16 LED 500mA	28 Watts	6.00 Metres	Galvanised Steel	
Y	12	STREET LIGHTING	PENSHURST ROAD	CLEETHORPES	529933.58	407781.89	2015	30/07/2015	55289	1 Urbis LED	Axia 16 LED 500mA	28 Watts	6.00 Metres	Galvanised Steel	
Y	13	STREET LIGHTING	PENSHURST ROAD	CLEETHORPES	529952.19	407806.06	2015	30/07/2015	55290	1 Urbis LED	Axia 16 LED 500mA	28 Watts	6.00 Metres	Galvanised Steel	
Y	14	STREET LIGHTING	PENSHURST ROAD	CLEETHORPES	529967.38	407831.06	2015	30/07/2015	55291	1 Urbis LED	Axia 16 LED 500mA	28 Watts	6.00 Metres	Galvanised Steel	
Y	15	STREET LIGHTING	PENSHURST ROAD	CLEETHORPES	530006.52	407827.72	2015	30/07/2015	55292	1 Urbis LED	Axia 16 LED 500mA	28 Watts	6.00 Metres	Galvanised Steel	
Y	16	STREET LIGHTING	PENSHURST ROAD	CLEETHORPES	529954.75	407868.35	2015	30/07/2015	55293	1 Urbis LED	Axia 16 LED 500mA	28 Watts	6.00 Metres	Galvanised Steel	
Y	17	STREET LIGHTING	PENSHURST ROAD	CLEETHORPES	529940.95	407900.82	2012	27/03/2012	55294	1 Urbis LED	Axia 16 LED 500mA	28 Watts	6.00 Metres	Steel	
Y	18	STREET LIGHTING	PENSHURST ROAD	CLEETHORPES	529919.56	407917.22	2014	15/11/2014	55295	1 Urbis LED	Axia 16 LED 500mA	28 Watts	6.00 Metres	Galvanised Steel	
Y	19	STREET LIGHTING	PENSHURST ROAD	CLEETHORPES	529901.08	407943.3	2014	15/11/2014	55296	1 Urbis LED	Axia 16 LED 500mA	28 Watts	6.00 Metres	Galvanised Steel	
Y	20	STREET LIGHTING	PENSHURST ROAD	CLEETHORPES	529892.73	407968.8	2014	15/11/2014	55297	1 Urbis LED	Axia 16 LED 500mA	28 Watts	6.00 Metres	Galvanised Steel	
Y	21	STREET LIGHTING	PENSHURST ROAD	CLEETHORPES	529871.34	407985.71	2014	15/11/2014	55298	1 Urbis LED	Axia 16 LED 500mA	28 Watts	6.00 Metres	Galvanised Steel	
Y	22	STREET LIGHTING	PENSHURST ROAD	CLEETHORPES	529860.58	408017.29	1989		55299	1 Urbis LED	Axia 16 LED 500mA	28 Watts	5.00 Metres	Galvanised Steel	
Y	1	STREET LIGHTING	PHILIP AVENUE	CLEETHORPES	529583.51	407481.71	1988		55390	Urbis	Axia 16 LED 350mA	19 Watts	6.00 Metres	Galvanised Steel	
Y	2	STREET LIGHTING	PHILIP AVENUE	CLEETHORPES	529583	407512.28	1988		55391	Urbis	Axia 16 LED 350mA	19 Watts	6.00 Metres	Galvanised Steel	
Y	3	STREET LIGHTING	PHILIP AVENUE	CLEETHORPES	529563.01	407531.71	1988		55392	Urbis	Axia 16 LED 350mA	19 Watts	6.00 Metres	Galvanised Steel	
Y	4	STREET LIGHTING	PHILIP AVENUE	CLEETHORPES	529561.74	407563.23	1988		55393	Urbis	Axia 16 LED 350mA	19 Watts	6.00 Metres	Galvanised Steel	
Y	5	STREET LIGHTING	PHILIP AVENUE	CLEETHORPES	529540.73	407586.08	1989		55394	Urbis	Axia 16 LED 350mA	19 Watts	6.00 Metres	Galvanised Steel	
Y	6	STREET LIGHTING	PHILIP AVENUE	CLEETHORPES	529539.72	407617.78	1988		55395	Urbis	Axia 16 LED 350mA	19 Watts	6.00 Metres	Galvanised Steel	
Y	7	STREET LIGHTING	PHILIP AVENUE	CLEETHORPES	529520.98	407635.06	1988		55396	Urbis	Axia 16 LED 350mA	19 Watts	6.00 Metres	Galvanised Steel	
Y	8	STREET LIGHTING	PHILIP AVENUE	CLEETHORPES	529511.11	407659.24	1988		55397	Urbis	Axia 16 LED 350mA	19 Watts	6.00 Metres	Galvanised Steel	
Y	9	STREET LIGHTING	PHILIP AVENUE	CLEETHORPES	529507.44	407686.9	2018	12/07/2018	55398	Urbis	Axia 16 LED 350mA	19 Watts	6.00 Metres	Galvanised Steel	
Y	10	STREET LIGHTING	PHILIP AVENUE	CLEETHORPES	529490.1	407707.97	1989		55399	Urbis	Axia 16 LED 350mA	19 Watts	6.00 Metres	Galvanised Steel	
Y	11	STREET LIGHTING	PHILIP AVENUE	CLEETHORPES	529519.97	407699.62	1988		55400	Urbis	Axia 16 LED 350mA	19 Watts	6.00 Metres	Galvanised Steel	
Y	12	STREET LIGHTING	PHILIP AVENUE	CLEETHORPES	529547.95	407709.94	1988		55401	Urbis	Axia 16 LED 350mA	19 Watts	6.00 Metres	Galvanised Steel	
Y	13	STREET LIGHTING	PHILIP AVENUE	CLEETHORPES	529563.14	407737.78	1988		55402	Urbis	Axia 16 LED 350mA	19 Watts	6.00 Metres	Galvanised Steel	
Y	14	STREET LIGHTING	PHILIP AVENUE	CLEETHORPES	529592.38	407749.37	1988		55403	Urbis	Axia 16 LED 350mA	19 Watts	6.00 Metres	Galvanised Steel	
Y	1	STREET LIGHTING	SOLOMON COURT	CLEETHORPES	529906.94	408056.46	2014	15/11/2014	57293	Urbis	Axia 16 LED 350mA	19 Watts	6.00 Metres	Galvanised Steel	
Y	2	STREET LIGHTING	SOLOMON COURT	CLEETHORPES	529923.63	408066.96	2023	10/11/2023	69453	Urbis	Axia 16 LED 350mA	19 Watts	6.00 Metres	Steel	
Y	3	STREET LIGHTING	SOLOMON COURT	CLEETHORPES	529941.62	408067.35	2014	15/11/2014	57295	Urbis	Axia 16 LED 350mA	19 Watts	6.00 Metres	Galvanised Steel	
Y	4	STREET LIGHTING	SOLOMON COURT	CLEETHORPES	529917.44	408035.77	2014	15/11/2014	57296	Urbis	Axia 16 LED 350mA	19 Watts	6.00 Metres	Galvanised Steel	
Y	5	STREET LIGHTING	SOLOMON COURT	CLEETHORPES	529935.67	408022.54	2001		57297	Urbis	Axia 16 LED 350mA	19 Watts	5.00 Metres	Galvanised Steel	
Y	1	STREET LIGHTING	CLEE ROAD	CLEETHORPES	530182.19	408912.24	1995		46178	1 Urbis LED	Ampera 48 LED 700mA	104 Watts	12.00 Metres	Galvanised Steel	
Y	2	STREET LIGHTING	CLEE ROAD	CLEETHORPES	530152.95	408870.47	2009		46179	1 Urbis LED	Ampera 48 LED 700mA	104 Watts	12.00 Metres	Steel	
Y	3	STREET LIGHTING	CLEE ROAD	CLEETHORPES	530097.63	408853.63	1995		46180	1 Urbis LED	Ampera 48 LED 700mA	104 Watts	12.00 Metres	Galvanised Steel	
Y	4	STREET LIGHTING	CLEE ROAD	CLEETHORPES	530079.28	408827.24	1995		46181	1 Urbis LED	Ampera 48 LED 700mA	104 Watts	12.00 Metres	Galvanised Steel	
Y	5	STREET LIGHTING	CLEE ROAD	CLEETHORPES	530050.17	408830.34	1995		46182	1 Urbis LED	Ampera 48 LED 700mA	104 Watts	12.00 Metres	Galvanised Steel	
Y	6	STREET LIGHTING	CLEE ROAD	CLEETHORPES	530023.58	408799.83	1995		46183	1 Urbis LED	Ampera 48 LED 700mA	104 Watts	12.00 Metres	Galvanised Steel	
Y	7	STREET LIGHTING	CLEE ROAD	CLEETHORPES	529994.03	408798.88	1995		46184	1 Urbis LED	Ampera 48 LED 700mA	104 Watts	12.00 Metres	Galvanised Steel	
Y	8	STREET LIGHTING	CLEE ROAD	CLEETHORPES	529969.35	408765.59	1995		46185	1 Urbis LED	Ampera 48 LED 700mA	104 Watts	12.00 Metres	Galvanised Steel	
Y	9	STREET LIGHTING	CLEE ROAD	CLEETHORPES	529927	408756.01	2009		46186	1 Urbis LED	Ampera 48 LED 700mA	104 Watts	12.00 Metres	Steel	
Y	10	STREET LIGHTING	CLEE ROAD	CLEETHORPES	529907.83	408719.45	1995		46187	1 Urbis LED	Ampera 48 LED 700mA	104 Watts	12.00 Metres	Galvanised Steel	
Y	11	STREET LIGHTING	CLEE ROAD	CLEETHORPES	529877.58	408692.05	2009		46188	1 Urbis LED	Ampera 48 LED 700mA	104 Watts	12.00 Metres	Steel	
Y	12	STREET LIGHTING	CLEE ROAD	CLEETHORPES	529848.97	408686.48	1995		46189	1 Urbis LED	Ampera 48 LED 700mA	104 Watts	12.00 Metres	Galvanised Steel	
Y	13	STREET LIGHTING	CLEE ROAD	CLEETHORPES	529838.84	408660.08	1995		46190	1 Urbis LED	Ampera 48 LED 700mA	104 Watts	12.00 Metres	Galvanised Steel	
Y	14	STREET LIGHTING	CLEE ROAD	CLEETHORPES	529805.55	408644.13	1995		46191	1 Urbis LED	Ampera 48 LED 700mA	104 Watts	12.00 Metres	Galvanised Steel	
Y	15	STREET LIGHTING	CLEE ROAD	CLEETHORPES	529759.5	408641.45			69898	Urbis	Ampera Maxi 80 LED 700m	163 Watts			
Y	16	STREET LIGHTING	CLEE ROAD	CLEETHORPES	529731.53	408607.74	1995		46193	1 Urbis LED	Ampera 48 LED 700mA	104 Watts	12.00 Metres	Galvanised Steel	
Y	17	STREET LIGHTING	CLEE ROAD	CLEETHORPES	529690.8	408607.3	2009		46194	1 Urbis LED	Ampera 48 LED 700mA	104 Watts	12.00 Metres	Steel	
Y	18	STREET LIGHTING	CLEE ROAD	CLEETHORPES	529661.76	408573.36	1995		46195	1 Urbis LED	Ampera 48 LED 700mA	104 Watts	12.00 Metres	Galvanised Steel	
Y	19	STREET LIGHTING	CLEE ROAD	CLEETHORPES	529607.6	408571.5	2009		46196	1 Urbis LED	Ampera 48 LED 700mA	104 Watts	12.00 Metres	Steel	
Y	20	STREET LIGHTING	CLEE ROAD	CLEETHORPES	529587.71	408536.9	1995		46197	1 Urbis LED	Ampera 48 LED 700mA	104 Watts	12.00 Metres	Galvanised Steel	
Y	21	STREET LIGHTING	CLEE ROAD	CLEETHORPES	529544	408535.4	2009		46198	1 Urbis LED	Ampera 48 LED 700mA	104 Watts	12.00 Metres	Steel	
Y	22	STREET LIGHTING	CLEE ROAD	CLEETHORPES	529511.63	408499.69	1995		46199	1 Urbis LED	Ampera 48 LED 700mA	104 Watts	12.00 Metres	Galvanised Steel	
Y	23	STREET LIGHTING	CLEE ROAD	CLEETHORPES	529479.61	408501.65	1995		46200	1 Urbis LED	Ampera 48 LED 700mA	104 Watts	12.00 Metres	Galvanised Steel	
Y	24	STREET LIGHTING	CLEE ROAD	CLEETHORPES	529462.27	408474.63	1995		46201	1 Urbis LED	Ampera 48 LED 700mA	104 Watts	12.00 Metres	Galvanised Steel	
Y	25	STREET LIGHTING	CLEE ROAD	CLEETHORPES	529428.98	408448.3	1995		46202	1 Urbis LED	Ampera 48 LED 700mA	104 Watts	12.00 Metres	Galvanised Steel	
Y	26	STREET LIGHTING	CLEE ROAD	CLEETHORPES	529389.61	408440.38	1995		46203	1 Urbis LED	Ampera 48 LED 700mA	104 Watts	12.00 Metres	Galvanised Steel	
Y	27	STREET LIGHTING	CLEE ROAD	CLEETHORPES	529364.17	408425.26	1995		46204	1 Urbis LED	Ampera 48 LED 700mA	104 Watts	12.00 Metres	Galvanised Steel	
Y	28	STREET LIGHTING	CLEE ROAD	CLEETHORPES	529347.33	408401.36	2019	13/11/2019	67504	Urbis	Ampera 48 LED 700mA	104 Watts	12.00 Metres	Galvanised Steel	
Y	29	STREET LIGHTING	CLEE ROAD	CLEETHORPES	529308.8	408391.8	2009		46206	1 Urbis LED	Ampera 48 LED 700mA	104 Watts	12.00 Metres	Steel	
Y	30	STREET LIGHTING	CLEE ROAD	CLEETHORPES	529279.49	408365.77	1995		46207	1 Urbis LED	Ampera 48 LED 700mA	104 Watts	12.00 Metres	Galvanised Steel	
Y	31	STREET LIGHTING	CLEE ROAD	CLEETHORPES	529261.51	408335.01	1995		46208	1 Urbis LED	Ampera 48 LED 700mA	104 Watts	12.00 Metres	Galvanised Steel	
Y	32	STREET LIGHTING	CLEE ROAD	CLEETHORPES	529219.6	408321.2	2009		46209	1 Urbis LED	Ampera 48 LED 700mA	104 Watts	12.00 Metres	Steel	
Y	33	STREET LIGHTING	CLEE ROAD	CLEETHORPES	529202.78	408288.14	1995		46210	1 Urbis LED	Ampera 48 LED 700mA	104 Watts	12.00 Metres	Galvanised Steel	
Y	34	STREET LIGHTING	CLEE ROAD	CLEETHORPES	529160.04	408271.64	1995		46211	1 Urbis LED	Ampera 48 LED 700mA	104 Watts	12.00 Metres	Galvanised Steel	
Y	35	STREET LIGHTING	CLEE ROAD	CLEETHORPES	529137.66	408236.25	1995		46212	1 Urbis LED	Ampera 48 LED 700mA	104 Watts	12.00 Metres	Galvanised Steel	
Y	36	STREET LIGHTING	CLEE ROAD	CLEETHORPES	529096.4	408221.69	1995		46213	1 Urbis LED	Ampera 48 LED 700mA	104 Watts	12.00 Metres	Galvanised Steel	
Y	37	STREET LIGHTING	CLEE ROAD	CLEETHORPES	529071.59	408184.85	1995		46214	1 Urbis LED	Ampera 48 LED 700mA	104 Watts	12.00 Metres	Galvanised Steel	
Y	38	STREET LIGHTING	CLEE ROAD	CLEETHORPES	529030.32	408169.54	1995		46215	1 Urbis LED	Ampera 48 LED 700mA	104 Watts	12.00 Metres	Galvanised Steel	
Y	39	STREET LIGHTING	CLEE ROAD	CLEETHORPES	529017	408140	2009		46216	1 Urbis LED	Ampera 48 LED 700mA	104 Watts	12.00 Metres	Steel	
Y	40	STREET LIGHTING	CLEE ROAD	CLEETHORPES	528978.43	408112.26	1995		46217	1 Urbis LED	Ampera 48 LED 700mA	104 Watts	12.00 Metres	Galvanised Steel	
Y	1	STREET LIGHTING	WELBECK ROAD	CLEETHORPES	529145.42	408060.43	2018	17/07/2018	67222	Urbis	Teceo 24 LED 500mA	40 Watts	6.00 Metres	Galvanised Steel	
Y	2	STREET LIGHTING	WELBECK ROAD	CLEETHORPES	529180.49	408034.71	2018	17/07/2018	67223	Urbis	Teceo 24 LED 500mA	40 Watts	6.00 Metres	Galvanised Steel	
Y	3	STREET LIGHTING	WELBECK ROAD	CLEETHORPES	529212.36	408003.21	2018	17/07/2018	67224	Urbis	Teceo 24 LED 500mA	40 Watts	6.00 Metres	Galvanised Steel	
Y	1	STREET LIGHTING	CROSS STREET	CLEETHORPES	530496.08	408852.81	1995		47100	1 Urbis LED	Teceo 16 LED 500mA	28 Watts	6.00 Metres	Galvanised Steel	
Y	2	STREET LIGHTING	CROSS STREET	CLEETHORPES	530478.1	408868.06	1995		47101	1 Urbis LED	Teceo 16 LED 500mA	28 Watts	6.00 Metres	Galvanised Steel	
Y	3	STREET LIGHTING	CROSS STREET	CLEETHORPES	530475.32	408891.22	1995		47102	1 Urbis LED	Teceo 24 LED 500mA	40 Watts	8.00 Metres	Galvanised Steel	
Y	4	STREET LIGHTING	CROSS STREET	CLEETHORPES	530447.27	408917.63	1995		47103	1 Urbis LED	Teceo 24 LED 500mA	40 Watts	8.00 Metres	Galvanised Steel	
Y	5	STREET LIGHTING	CROSS STREET	CLEETHORPES	530436.74	408934.9	2009		47104	1 Urbis LED	Teceo 24 LED 500mA	40 Watts	6.00 Metres	Steel	
Y	6	STREET LIGHTING	CROSS STREET	CLEETHORPES	530425.68	408950.74	1995		47105	1 Urbis LED	Teceo 16 LED 500mA	28 Watts	6.00 Metres	Galvanised Steel	
Y	1	STREET LIGHTING	ALBERT ROAD	CLEETHORPES	530747.69	408766.93	2003		42844	DW Windsor	Windsor 15 LED	35 Watts	5.00 Metres	Cast Iron	
Y	2	STREET LIGHTING	ALBERT ROAD	CLEETHORPES	530722.3	408759.34	2003		42845	DW Windsor	Windsor 15 LED	35 Watts	5.00 Metres	Cast Iron	
Y	3	STREET LIGHTING	ALBERT ROAD	CLEETHORPES	530700.27	408744.31	2003		42846	DW Windsor	Windsor 15 LED	35 Watts	5.00 Metres	Cast Iron	
Y	4	STREET LIGHTING	ALBERT ROAD	CLEETHORPES	530681.89	408731.46	2003		42847	DW Windsor	Windsor 15 LED	35 Watts	5.00 Metres	Cast Iron	
Y	5	STREET LIGHTING	ALBERT ROAD	CLEETHORPES	530662.68	408718.42	2003		42848	DW Windsor	Windsor 15 LED	35 Watts	5.00 Metres	Cast Iron	
Y	6	STREET LIGHTING	ALBERT ROAD	CLEETHORPES	530645.62	408697.5	2003		42849	DW Windsor	Windsor 15 LED	35 Watts	5.00 Metres	Cast Iron	
Y	7	STREET LIGHTING	ALBERT ROAD	CLEETHORPES	530615.71	408690.04	2003		42850	DW Windsor	Windsor 15 LED	35 Watts	5.00 Metres	Cast Iron	
Y	8	STREET LIGHTING	ALBERT ROAD	CLEETHORPES	530595.64	408677.97	2003		42851	DW Windsor	Windsor 15 LED	35 Watts	5.00 Metres	Cast Iron	
Y	9	STREET LIGHTING	ALBERT ROAD	CLEETHORPES	530572.61	408664.37	2003		42852	DW Windsor	Windsor 15 LED	35 Watts	5.00 Metres	Cast Iron	
Y	1	STREET LIGHTING	BENTLEY STREET	CLEETHORPES	530420.91	408824.02	2004		44052	1 Urbis LED	Teceo 24 LED 500mA	40 Watts	8.00 Metres	Galvanised Steel	
Y	2	STREET LIGHTING	BENTLEY STREET	CLEETHORPES	530397.63	408820.09	2004		44053	1 Urbis LED	Teceo 24 LED 500mA	40 Watts	8.00 Metres	Galvanised Steel	
Y	3	STREET LIGHTING	BENTLEY STREET	CLEETHORPES	530371.55	408789.33	1981		44054	1 Urbis LED	Teceo 24 LED 500mA	40 Watts	8.00 Metres	Galvanised Steel	
Y	4	STREET LIGHTING	BENTLEY STREET	CLEETHORPES	530335.48	408776.23	1981		44055	1 Urbis LED	Teceo 24 LED 500mA	40 Watts	8.00 Metres	Galvanised Steel	
Y	5	STREET LIGHTING	BENTLEY STREET	CLEETHORPES	530310.92	408745.15	1981		44056	1 Urbis LED	Teceo 24 LED 500mA	40 Watts	8.00 Metres	Galvanised Steel	
Y	6	STREET LIGHTING	BENTLEY STREET	CLEETHORPES	530272.95	408729.45	1981		44057	1 Urbis LED	Teceo 24 LED 500mA	40 Watts	8.00 Metres	Galvanised Steel	
Y	7	STREET LIGHTING	BENTLEY STREET	CLEETHORPES	530253.96	408702.05	1981		44058	1 Urbis LED	Teceo 24 LED 500mA	40 Watts	8.00 Metres	Galvanised Steel	
Y	8	STREET LIGHTING	BENTLEY STREET	CLEETHORPES	530228.64	408683	1981		44059	1 Urbis LED	Teceo 24 LED 500mA	40 Watts	8.00 Metres	Galvanised Steel	
Y	9	STREET LIGHTING	BENTLEY STREET	CLEETHORPES	530193.71	408669.39	1981		44060	1 Urbis LED	Teceo 24 LED 500mA	40 Watts	8.00 Metres	Galvanised Steel	
Y	10	STREET LIGHTING	BENTLEY STREET	CLEETHORPES	530171.3	408639.71	1981		44061	1 Urbis LED	Teceo 24 LED 500mA	40 Watts	8.00 Metres	Galvanised Steel	
Y	11	STREET LIGHTING	BENTLEY STREET	CLEETHORPES	530148.26	408635.34	1981		44062	1 Urbis LED	Teceo 24 LED 500mA	40 Watts	8.00 Metres	Galvanised Steel	
Y	12	STREET LIGHTING	BENTLEY STREET	CLEETHORPES	530124.47	408604.39	1981		44063	1 Urbis LED	Teceo 24 LED 500mA	40 Watts	8.00 Metres	Galvanised Steel	
Y	13	STREET LIGHTING	BENTLEY STREET	CLEETHORPES	530090.16	408591.8	1981		44064	1 Urbis LED	Teceo 24 LED 500mA	40 Watts	8.00 Metres	Galvanised Steel	
Y	14	STREET LIGHTING	BENTLEY STREET	CLEETHORPES	530059.18	408573.27	2022	03/11/2022	69044	Urbis	Teceo 24 LED 500mA	40 Watts	8.00 Metres	Galvanised Steel	
Y	15	STREET LIGHTING	BENTLEY STREET	CLEETHORPES	530051.22	408549.49	2004		44066	1 Urbis LED	Teceo 24 LED 500mA	40 Watts	8.00 Metres	Galvanised Steel	
Y	16	STREET LIGHTING	BENTLEY STREET	CLEETHORPES	530018.86	408538.3	2004		44067	1 Urbis LED	Teceo 24 LED 500mA	40 Watts	8.00 Metres	Galvanised Steel	

Y	17	STREET LIGHTING	BENTLEY STREET	CLEETHORPES	529989.49	408515.9	2004		44068	1 Urbis LED	Teceo 24 LED 500mA	40 Watts	8.00 Metres	Galvanised Steel	
Y	18	STREET LIGHTING	BENTLEY STREET	CLEETHORPES	529967.73	408490.46	2004		44069	1 Urbis LED	Teceo 24 LED 500mA	40 Watts	6.00 Metres	Galvanised Steel	
Y	19	STREET LIGHTING	BENTLEY STREET	CLEETHORPES	529930.98	408479.89	2004		44070	1 Urbis LED	Teceo 24 LED 500mA	40 Watts	6.00 Metres	Galvanised Steel	
Y	20	STREET LIGHTING	BENTLEY STREET	CLEETHORPES	529905.02	408452.66	2004		44071	1 Urbis LED	Teceo 24 LED 500mA	40 Watts	6.00 Metres	Galvanised Steel	
Y	21	STREET LIGHTING	BENTLEY STREET	CLEETHORPES	529874.04	408441.99	2004		44072	1 Urbis LED	Teceo 24 LED 500mA	40 Watts	6.00 Metres	Galvanised Steel	
Y	22	STREET LIGHTING	BENTLEY STREET	CLEETHORPES	529842.53	408408.22	2004		44073	1 Urbis LED	Teceo 24 LED 500mA	40 Watts	6.00 Metres	Galvanised Steel	
Y	23	STREET LIGHTING	BENTLEY STREET	CLEETHORPES	529813.34	408390.36	2004		44074	1 Urbis LED	Teceo 24 LED 500mA	40 Watts	6.00 Metres	Galvanised Steel	
Y	1	STREET LIGHTING	BOWLING LANE	CLEETHORPES	530534.1	408681.4	1998		44450	1 Urbis LED	Axia 16 LED 500mA	28 Watts	6.00 Metres	Galvanised Steel	
Y	2	STREET LIGHTING	BOWLING LANE	CLEETHORPES	530513.98	408671.98	2007		44451	1 Urbis LED	Axia 16 LED 500mA	28 Watts	6.00 Metres	Galvanised Steel	
Y	3	STREET LIGHTING	BOWLING LANE	CLEETHORPES	530488.03	408649.89	2011		44452	1 Urbis LED	Axia 16 LED 500mA	28 Watts	6.00 Metres	Steel	
Y	4	STREET LIGHTING	BOWLING LANE	CLEETHORPES	530468.2	408642	2002		44453	1 Urbis LED	Axia 16 LED 500mA	28 Watts	6.00 Metres	Stainless Steel	
Y	5	STREET LIGHTING	BOWLING LANE	CLEETHORPES	530439.72	408623.04	2002		44454	1 Urbis LED	Axia 16 LED 500mA	28 Watts	6.00 Metres	Stainless Steel	
Y	6	STREET LIGHTING	BOWLING LANE	CLEETHORPES	530397.32	408591.89	2018	01/10/2018	67134	Urbis	Axia 16 LED 500mA	28 Watts	6.00 Metres	Steel	
Y	7	STREET LIGHTING	BOWLING LANE	CLEETHORPES	530339.51	408550.12	2018	01/10/2018	67218	Urbis	Axia 16 LED 500mA	28 Watts	6.00 Metres	Steel	
Y	1	STREET LIGHTING	BURSAR STREET	CLEETHORPES	530305.84	408876.66	2005		44961	1 Urbis LED	Teceo 24 LED 500mA	40 Watts	6.00 Metres	Stainless Steel	
Y	2	STREET LIGHTING	BURSAR STREET	CLEETHORPES	530277.14	408855.13	2005		44962	1 Urbis LED	Teceo 24 LED 500mA	40 Watts	6.00 Metres	Stainless Steel	
Y	3	STREET LIGHTING	BURSAR STREET	CLEETHORPES	530238.88	408839.76	2005		44963	1 Urbis LED	Teceo 24 LED 500mA	40 Watts	6.00 Metres	Galvanised Steel	
Y	4	STREET LIGHTING	BURSAR STREET	CLEETHORPES	530223.15	408814.28	2005		44964	1 Urbis LED	Teceo 24 LED 500mA	40 Watts	6.00 Metres	Stainless Steel	
Y	5	STREET LIGHTING	BURSAR STREET	CLEETHORPES	530193.99	408792.31	2005		44965	1 Urbis LED	Teceo 24 LED 500mA	40 Watts	6.00 Metres	Stainless Steel	
Y	6	STREET LIGHTING	BURSAR STREET	CLEETHORPES	530157.34	408777.52	2005		44966	1 Urbis LED	Teceo 24 LED 500mA	40 Watts	6.00 Metres	Galvanised Steel	
Y	7	STREET LIGHTING	BURSAR STREET	CLEETHORPES	530135.35	408761.54	2005		44967	1 Urbis LED	Teceo 24 LED 500mA	40 Watts	6.00 Metres	Stainless Steel	
Y	8	STREET LIGHTING	BURSAR STREET	CLEETHORPES	530122.43	408737.81	2005		44968	1 Urbis LED	Teceo 24 LED 500mA	40 Watts	6.00 Metres	Stainless Steel	
Y	1	STREET LIGHTING	CENTRAL PROMENADE	CLEETHORPES	530742.6	408969.5	1995		61478	GoodLight	30 LED Bulb	30 Watts	8.00 Metres	Steel	
Y	1	STREET LIGHTING	CENTRAL PROMENADE	CLEETHORPES	530742.6	408969.5	1995		62010	GoodLight	30 LED Bulb	30 Watts	8.00 Metres	Steel	
Y	2	STREET LIGHTING	CENTRAL PROMENADE	CLEETHORPES	530750.5	408954.3	1995		61479	GoodLight	30 LED Bulb	30 Watts	6.00 Metres	Steel	
Y	2	STREET LIGHTING	CENTRAL PROMENADE	CLEETHORPES	530750.5	408954.3	1995		62011	GoodLight	30 LED Bulb	30 Watts	6.00 Metres	Steel	
Y	3	STREET LIGHTING	CENTRAL PROMENADE	CLEETHORPES	530762.71	408932.3	1995		61480	GoodLight	30 LED Bulb	30 Watts	6.00 Metres	Steel	
Y	3	STREET LIGHTING	CENTRAL PROMENADE	CLEETHORPES	530762.71	408932.3	1995		62012	GoodLight	30 LED Bulb	30 Watts	6.00 Metres	Steel	
Y	4	STREET LIGHTING	CENTRAL PROMENADE	CLEETHORPES	530769.3	408921.36	1995		61481	GoodLight	30 LED Bulb	30 Watts	6.00 Metres	Steel	
Y	4	STREET LIGHTING	CENTRAL PROMENADE	CLEETHORPES	530769.3	408921.36	1995		62013	GoodLight	30 LED Bulb	30 Watts	6.00 Metres	Steel	
Y	5	STREET LIGHTING	CENTRAL PROMENADE	CLEETHORPES	530779.95	408904.25	1995		61482	GoodLight	30 LED Bulb	30 Watts	6.00 Metres	Steel	
Y	5	STREET LIGHTING	CENTRAL PROMENADE	CLEETHORPES	530779.95	408904.25	1995		62014	GoodLight	30 LED Bulb	30 Watts	6.00 Metres	Steel	
Y	6	STREET LIGHTING	CENTRAL PROMENADE	CLEETHORPES	530790.13	408887.55	1995		61483	GoodLight	30 LED Bulb	30 Watts	6.00 Metres	Steel	
Y	6	STREET LIGHTING	CENTRAL PROMENADE	CLEETHORPES	530790.13	408887.55	1995		62015	GoodLight	30 LED Bulb	30 Watts	6.00 Metres	Steel	
Y	7	STREET LIGHTING	CENTRAL PROMENADE	CLEETHORPES	530800.92	408870.65	1995		61484	GoodLight	30 LED Bulb	30 Watts	6.00 Metres	Steel	
Y	7	STREET LIGHTING	CENTRAL PROMENADE	CLEETHORPES	530800.92	408870.65	1995		62016	GoodLight	30 LED Bulb	30 Watts	6.00 Metres	Steel	
Y	8	STREET LIGHTING	CENTRAL PROMENADE	CLEETHORPES	530812	408854.25	1995		61485	GoodLight	30 LED Bulb	30 Watts	6.00 Metres	Steel	
Y	8	STREET LIGHTING	CENTRAL PROMENADE	CLEETHORPES	530812	408854.25	1995		62017	GoodLight	30 LED Bulb	30 Watts	6.00 Metres	Steel	
Y	9	STREET LIGHTING	CENTRAL PROMENADE	CLEETHORPES	530823.62	408837.61	1995		61486	GoodLight	30 LED Bulb	30 Watts	6.00 Metres	Steel	
Y	9	STREET LIGHTING	CENTRAL PROMENADE	CLEETHORPES	530823.62	408837.61	1995		62018	GoodLight	30 LED Bulb	30 Watts	6.00 Metres	Steel	
Y	10	STREET LIGHTING	CENTRAL PROMENADE	CLEETHORPES	530835.24	408821.44	1995		61487	GoodLight	30 LED Bulb	30 Watts	6.00 Metres	Steel	
Y	10	STREET LIGHTING	CENTRAL PROMENADE	CLEETHORPES	530835.24	408821.44	1995		62019	GoodLight	30 LED Bulb	30 Watts	6.00 Metres	Steel	
Y	11	STREET LIGHTING	CENTRAL PROMENADE	CLEETHORPES	530848.38	408803.75	1995		61488	GoodLight	30 LED Bulb	30 Watts	6.00 Metres	Steel	
Y	11	STREET LIGHTING	CENTRAL PROMENADE	CLEETHORPES	530848.38	408803.75	1995		62020	GoodLight	30 LED Bulb	30 Watts	6.00 Metres	Steel	
Y	12	STREET LIGHTING	CENTRAL PROMENADE	CLEETHORPES	530860.23	408787.73	1995		61489	GoodLight	30 LED Bulb	30 Watts	6.00 Metres	Steel	
Y	12	STREET LIGHTING	CENTRAL PROMENADE	CLEETHORPES	530860.23	408787.73	1995		62021	GoodLight	30 LED Bulb	30 Watts	6.00 Metres	Steel	
Y	13	STREET LIGHTING	CENTRAL PROMENADE	CLEETHORPES	530872.25	408771.54	1995		61490	GoodLight	30 LED Bulb	30 Watts	6.00 Metres	Steel	
Y	13	STREET LIGHTING	CENTRAL PROMENADE	CLEETHORPES	530872.25	408771.54	1995		62022	GoodLight	30 LED Bulb	30 Watts	6.00 Metres	Steel	
Y	14	STREET LIGHTING	CENTRAL PROMENADE	CLEETHORPES	530884.63	408755.82	1995		61491	GoodLight	30 LED Bulb	30 Watts	6.00 Metres	Steel	
Y	14	STREET LIGHTING	CENTRAL PROMENADE	CLEETHORPES	530884.63	408755.82	1995		62023	GoodLight	30 LED Bulb	30 Watts	6.00 Metres	Steel	
Y	15	STREET LIGHTING	CENTRAL PROMENADE	CLEETHORPES	530897.16	408740.44	1995		61492	GoodLight	30 LED Bulb	30 Watts	6.00 Metres	Steel	
Y	15	STREET LIGHTING	CENTRAL PROMENADE	CLEETHORPES	530897.16	408740.44	1995		62024	GoodLight	30 LED Bulb	30 Watts	6.00 Metres	Steel	
Y	16	STREET LIGHTING	CENTRAL PROMENADE	CLEETHORPES	530909.23	408725.59	1995		61493	GoodLight	30 LED Bulb	30 Watts	6.00 Metres	Steel	
Y	16	STREET LIGHTING	CENTRAL PROMENADE	CLEETHORPES	530909.23	408725.59	1995		62025	GoodLight	30 LED Bulb	30 Watts	6.00 Metres	Steel	
Y	17	STREET LIGHTING	CENTRAL PROMENADE	CLEETHORPES	530922.3	408710.02	1995		61494	GoodLight	30 LED Bulb	30 Watts	6.00 Metres	Steel	
Y	17	STREET LIGHTING	CENTRAL PROMENADE	CLEETHORPES	530922.3	408710.02	1995		62026	GoodLight	30 LED Bulb	30 Watts	6.00 Metres	Steel	
Y	18	STREET LIGHTING	CENTRAL PROMENADE	CLEETHORPES	530934.9	408694.34	1995		61495	GoodLight	30 LED Bulb	30 Watts	6.00 Metres	Steel	
Y	18	STREET LIGHTING	CENTRAL PROMENADE	CLEETHORPES	530934.9	408694.34	1995		62027	GoodLight	30 LED Bulb	30 Watts	6.00 Metres	Steel	
Y	19	STREET LIGHTING	CENTRAL PROMENADE	CLEETHORPES	530946.9	408678.54	1995		61496	GoodLight	30 LED Bulb	30 Watts	6.00 Metres	Steel	
Y	19	STREET LIGHTING	CENTRAL PROMENADE	CLEETHORPES	530946.9	408678.54	1995		62028	GoodLight	30 LED Bulb	30 Watts	6.00 Metres	Steel	
Y	20	STREET LIGHTING	CENTRAL PROMENADE	CLEETHORPES	530959.05	408663.09	1995		61497	GoodLight	30 LED Bulb	30 Watts	6.00 Metres	Steel	
Y	20	STREET LIGHTING	CENTRAL PROMENADE	CLEETHORPES	530959.05	408663.09	1995		62029	GoodLight	30 LED Bulb	30 Watts	6.00 Metres	Steel	
Y	21	STREET LIGHTING	CENTRAL PROMENADE	CLEETHORPES	530970.9	408647.09	1995		61498	GoodLight	30 LED Bulb	30 Watts	6.00 Metres	Steel	
Y	21	STREET LIGHTING	CENTRAL PROMENADE	CLEETHORPES	530970.9	408647.09	1995		62030	GoodLight	30 LED Bulb	30 Watts	6.00 Metres	Steel	
Y	22	STREET LIGHTING	CENTRAL PROMENADE	CLEETHORPES	530982.37	408631.41	1995		61499	GoodLight	30 LED Bulb	30 Watts	6.00 Metres	Steel	
Y	22	STREET LIGHTING	CENTRAL PROMENADE	CLEETHORPES	530982.37	408631.41	1995		62031	GoodLight	30 LED Bulb	30 Watts	6.00 Metres	Steel	
Y	23	STREET LIGHTING	CENTRAL PROMENADE	CLEETHORPES	530994.22	408614.89	1995		61500	GoodLight	30 LED Bulb	30 Watts	6.00 Metres	Steel	
Y	23	STREET LIGHTING	CENTRAL PROMENADE	CLEETHORPES	530994.22	408614.89	1995		62032	GoodLight	30 LED Bulb	30 Watts	6.00 Metres	Steel	
Y	24	STREET LIGHTING	CENTRAL PROMENADE	CLEETHORPES	531005.83	408598.45	1995		61501	GoodLight	30 LED Bulb	30 Watts	6.00 Metres	Steel	
Y	24	STREET LIGHTING	CENTRAL PROMENADE	CLEETHORPES	531005.83	408598.45	1995		62033	GoodLight	30 LED Bulb	30 Watts	6.00 Metres	Steel	
Y	25	STREET LIGHTING	CENTRAL PROMENADE	CLEETHORPES	531016.69	408581.97	1995		61502	GoodLight	30 LED Bulb	30 Watts	6.00 Metres	Steel	
Y	25	STREET LIGHTING	CENTRAL PROMENADE	CLEETHORPES	531016.69	408581.97	1995		62034	GoodLight	30 LED Bulb	30 Watts	6.00 Metres	Steel	
Y	26	STREET LIGHTING	CENTRAL PROMENADE	CLEETHORPES	531027.78	408565.12	1995		61503	GoodLight	30 LED Bulb	30 Watts	6.00 Metres	Steel	
Y	26	STREET LIGHTING	CENTRAL PROMENADE	CLEETHORPES	531027.78	408565.12	1995		62035	GoodLight	30 LED Bulb	30 Watts	6.00 Metres	Steel	
Y	27	STREET LIGHTING	CENTRAL PROMENADE	CLEETHORPES	531039.78	408546.55	1995		61504	GoodLight	30 LED Bulb	30 Watts	6.00 Metres	Steel	
Y	27	STREET LIGHTING	CENTRAL PROMENADE	CLEETHORPES	531039.78	408546.55	1995		62036	GoodLight	30 LED Bulb	30 Watts	6.00 Metres	Steel	
Y	28	STREET LIGHTING	CENTRAL PROMENADE	CLEETHORPES	531050.94	408529.01	1995		61505	GoodLight	30 LED Bulb	30 Watts	6.00 Metres	Steel	
Y	28	STREET LIGHTING	CENTRAL PROMENADE	CLEETHORPES	531050.94	408529.01	1995		62037	GoodLight	30 LED Bulb	30 Watts	6.00 Metres	Steel	
Y	29	STREET LIGHTING	CENTRAL PROMENADE	CLEETHORPES	531062.48	408511.66	1995		61506	GoodLight	30 LED Bulb	30 Watts	6.00 Metres	Steel	
Y	29	STREET LIGHTING	CENTRAL PROMENADE	CLEETHORPES	531062.48	408511.66	1995		62038	GoodLight	30 LED Bulb	30 Watts	6.00 Metres	Steel	
Y	30	STREET LIGHTING	CENTRAL PROMENADE	CLEETHORPES	531074.63	408492.52	1995		61507	GoodLight	30 LED Bulb	30 Watts	6.00 Metres	Steel	
Y	30	STREET LIGHTING	CENTRAL PROMENADE	CLEETHORPES	531074.63	408492.52	1995		62039	GoodLight	30 LED Bulb	30 Watts	6.00 Metres	Steel	
Y	1	STREET LIGHTING	COSGROVE STREET	CLEETHORPES	530565.32	408827.69	1988		46777	1 Urbis LED	Teceo 16 LED 500mA	28 Watts	6.00 Metres	Galvanised Steel	
Y	2	STREET LIGHTING	COSGROVE STREET	CLEETHORPES	530567.85	408793.57	1988		46778	1 Urbis LED	Teceo 16 LED 500mA	28 Watts	6.00 Metres	Galvanised Steel	
Y	3	STREET LIGHTING	COSGROVE STREET	CLEETHORPES	530591.27	408764.71	1988		46779	1 Urbis LED	Teceo 16 LED 500mA	28 Watts	6.00 Metres	Galvanised Steel	
Y	4	STREET LIGHTING	COSGROVE STREET	CLEETHORPES	530599.62	408717.95	1988		46780	1 Urbis LED	Teceo 16 LED 500mA	28 Watts	6.00 Metres	Galvanised Steel	
Y	1	STREET LIGHTING	CROWHILL AVENUE	CLEETHORPES	530436.05	408489.64	2008		47109	1 Urbis LED	Teceo 24 LED 500mA	40 Watts	5.00 Metres	Galvanised Steel	
Y	2	STREET LIGHTING	CROWHILL AVENUE	CLEETHORPES	530405.37	408513.74	2008		47110	1 Urbis LED	Teceo 24 LED 500mA	40 Watts	5.00 Metres	Galvanised Steel	
Y	3	STREET LIGHTING	CROWHILL AVENUE	CLEETHORPES	530393.72	408547.16	2008		47111	1 Urbis LED	Teceo 24 LED 500mA	40 Watts	5.00 Metres	Galvanised Steel	
Y	4	STREET LIGHTING	CROWHILL AVENUE	CLEETHORPES	530367.52	408565.45	2008		47112	1 Urbis LED	Teceo 24 LED 500mA	40 Watts	5.00 Metres	Galvanised Steel	
Y	5	STREET LIGHTING	CROWHILL AVENUE	CLEETHORPES	530355.88	408599.12	2008		47113	1 Urbis LED	Teceo 24 LED 500mA	40 Watts	5.00 Metres	Galvanised Steel	
Y	6	STREET LIGHTING	CROWHILL AVENUE	CLEETHORPES	530327.15	408620.45	2008		47114	1 Urbis LED	Teceo 24 LED 500mA	40 Watts	5.00 Metres	Galvanised Steel	
Y	7	STREET LIGHTING	CROWHILL AVENUE	CLEETHORPES	530317.4	408651.78	2008		47115	1 Urbis LED	Teceo 24 LED 500mA	40 Watts	5.00 Metres	Galvanised Steel	
Y	8	STREET LIGHTING	CROWHILL AVENUE	CLEETHORPES	530300.19	408675.39	2008		47116	1 Urbis LED	Teceo 24 LED 500mA	40 Watts	5.00 Metres	Galvanised Steel	
Y	1	STREET LIGHTING	DE LACY LANE	CLEETHORPES	530579.6	408695.19	2011		47429	Urbis	Axia 8 LED 350mA	10 Watts	6.00 Metres	Steel	
Y	2	STREET LIGHTING	DE LACY LANE	CLEETHORPES	530590.46	408701.61	2011		47430	Urbis	Axia 16 LED 350mA	19 Watts	6.00 Metres	Steel	
Y	1	STREET LIGHTING	DOLPHIN STREET	CLEETHORPES	530625.76	408863.63	2016	30/06/2016	47496	1 Urbis LED	Teceo 16 LED 500mA	28 Watts	6.00 Metres	Galvanised Steel	
Y	2	STREET LIGHTING	DOLPHIN STREET	CLEETHORPES	530646.64	408831.35	2016	30/06/2016	47497	1 Urbis LED	Teceo 16 LED 500mA	28 Watts	6.00 Metres	Galvanised Steel	
Y	3	STREET LIGHTING	DOLPHIN STREET	CLEETHORPES	530666.51	408801.54	2016	30/06/2016	47498	1 Urbis LED	Teceo 16 LED 500mA	28 Watts	6.00 Metres	Galvanised Steel	
Y	4	STREET LIGHTING	DOLPHIN STREET	CLEETHORPES	530689.3	408777.5	2023	14/02/2023	69203	Urbis	Axia 16 LED 350mA	19 Watts	6.00 Metres	Galvanised Steel	
Y	5	STREET LIGHTING	DOLPHIN STREET	CLEETHORPES	530711.65	408794.5	1995		47500	1 Urbis LED	Teceo 16 LED 500mA	28 Watts	5.00 Metres	Galvanised Steel	
Y	1	STREET LIGHTING	ELM ROAD	CLEETHORPES	530464.47	408717.13	1996		47975	1 Urbis LED	Teceo 16 LED 500mA	28 Watts	5.00 Metres	Galvanised Steel	
Y	2	STREET LIGHTING	ELM ROAD	CLEETHORPES	530439.53	408699.09	1996		47976	1 Urbis LED	Teceo 16 LED 500mA	28 Watts	6.00 Metres	Galvanised Steel	
Y	3	STREET LIGHTING	ELM ROAD	CLEETHORPES	530398.52	408669.85	1998		47977	1 Urbis LED	Axia 16 LED 500mA	28 Watts	5.00 Metres	Steel	
Y	4	STREET LIGHTING	ELM ROAD	CLEETHORPES	530363.21	408647.76	1937	17/06/1999	47978	1 Urbis LED	Teceo 16 LED 500mA	28 Watts	5.00 Metres	Steel	
Y	1	STREET LIGHTING	FAIRVIEW AVENUE	CLEETHORPES	530219.91	408668.47	2023	19/01/2023	69210	Urbis	Axia 24 LED 500mA	28 Watts	6.00 Metres	Galvanised Steel	
Y	2	STREET LIGHTING	FAIRVIEW AVENUE	CLEETHORPES	530228.04	408638.34	1993		48312	1 Urbis LED	Axia 16 LED 500mA	28 Watts	6.00 Metres	Galvanised Steel	
Y	3	STREET LIGHTING	FAIRVIEW AVENUE	CLEETHORPES	530251.58	408623.59	1993		48313	1 Urbis LED	Axia 16 LED 500mA	28 Watts	6.00 Metres	Galvanised Steel	
Y	4	STREET LIGHTING	FAIRVIEW AVENUE	CLEETHORPES	530257.03	408598.72	1993		48314	1 Urbis LED	Axia 16 LED 500mA	28 Watts	6.00 Metres	Galvanised Steel	
Y	5	STREET LIGHTING	FAIRVIEW AVENUE	CLEETHORPES	530281.2	408582.96	1993		48315	1 Urbis LED	Axia 16 LED 500mA	28 Watts	6.00 Metres	Galvanised Steel	

Y	6	STREET LIGHTING	FAIRVIEW AVENUE	CLEETHORPES	530296.14	408563.03	1993		48316	1 Urbis LED	Axia 16 LED 500mA	28 Watts	6.00 Metres	Galvanised Steel	
Y	7	STREET LIGHTING	FAIRVIEW AVENUE	CLEETHORPES	530303.48	408534.74	1993		48317	1 Urbis LED	Axia 16 LED 500mA	28 Watts	6.00 Metres	Galvanised Steel	
Y	8	STREET LIGHTING	FAIRVIEW AVENUE	CLEETHORPES	530327.03	408521.13	1993		48318	1 Urbis LED	Axia 16 LED 500mA	28 Watts	6.00 Metres	Galvanised Steel	
Y	9	STREET LIGHTING	FAIRVIEW AVENUE	CLEETHORPES	530334.24	408493.6	1993		48319	1 Urbis LED	Axia 16 LED 500mA	28 Watts	6.00 Metres	Galvanised Steel	
Y	10	STREET LIGHTING	FAIRVIEW AVENUE	CLEETHORPES	530357.28	408479.74	1993		48320	1 Urbis LED	Axia 16 LED 500mA	28 Watts	6.00 Metres	Galvanised Steel	
Y	11	STREET LIGHTING	FAIRVIEW AVENUE	CLEETHORPES	530363.74	408453.6	1993		48321	1 Urbis LED	Axia 16 LED 500mA	28 Watts	6.00 Metres	Galvanised Steel	
Y	1	STREET LIGHTING	GILES STREET	CLEETHORPES	530182.34	408750.47	2014		49266	1 Urbis LED	Teceo 24 LED 500mA	40 Watts	6.00 Metres	Galvanised Steel	
Y	2	STREET LIGHTING	GILES STREET	CLEETHORPES	530200.46	408711.05	2018	02/08/2018	66968	Urbis	Teceo 24 LED 500mA	40 Watts	6.00 Metres	Galvanised Steel	
Y	1	STREET LIGHTING	KEW ROAD	CLEETHORPES	530493.17	408519	1979		51583	Urbis	Axia 16 LED 350mA	19 Watts	5.00 Metres	Galvanised Steel	
Y	2	STREET LIGHTING	KEW ROAD	CLEETHORPES	530466.72	408537.48	1979		51584	Urbis	Axia 16 LED 350mA	19 Watts	5.00 Metres	Galvanised Steel	
Y	3	STREET LIGHTING	KEW ROAD	CLEETHORPES	530457.6	408568.3	1979		51585	Urbis	Axia 16 LED 350mA	19 Watts	5.00 Metres	Galvanised Steel	
Y	4	STREET LIGHTING	KEW ROAD	CLEETHORPES	530432.67	408583.68	1979		51586	Urbis	Axia 16 LED 350mA	19 Watts	5.00 Metres	Galvanised Steel	
Y	5	STREET LIGHTING	KEW ROAD	CLEETHORPES	530425.71	408610.96	1979		51587	Urbis	Axia 16 LED 350mA	19 Watts	5.00 Metres	Galvanised Steel	
Y	1	STREET LIGHTING	KNOLL STREET	CLEETHORPES	530870.93	408634.79	1998		51933	Urbis	AXIA 3.2 32 LED 510mA	50 Watts	8.00 Metres	Galvanised Steel	
Y	2	STREET LIGHTING	KNOLL STREET	CLEETHORPES	530842.49	408626.82	1998		51934	1 Urbis LED	Teceo 40 LED 500mA	64 Watts	8.00 Metres	Galvanised Steel	
Y	3	STREET LIGHTING	KNOLL STREET	CLEETHORPES	530824.16	408600	1998		51935	Urbis	AXIA 3.2 32 LED 510mA	50 Watts	8.00 Metres	Galvanised Steel	
Y	4	STREET LIGHTING	KNOLL STREET	CLEETHORPES	530790.48	408589.94	1998		51936	1 Urbis LED	Teceo 40 LED 500mA	64 Watts	8.00 Metres	Galvanised Steel	
Y	1	STREET LIGHTING	MILL HILL CRESCENT	CLEETHORPES	530039.89	408435.69	2018	18/06/2018	67093	Urbis	Axia 16 LED 350mA	19 Watts	6.00 Metres	Galvanised Steel	
Y	2	STREET LIGHTING	MILL HILL CRESCENT	CLEETHORPES	530064.32	408442.71	2018	18/06/2018	53624	Urbis	Axia 16 LED 350mA	19 Watts	6.00 Metres	Galvanised Steel	
Y	1	STREET LIGHTING	MILL PLACE	CLEETHORPES	530598.92	408842.93	1994		53629	1 Urbis LED	Axia 16 LED 500mA	28 Watts	5.00 Metres	Galvanised Steel	
Y	2	STREET LIGHTING	MILL PLACE	CLEETHORPES	530614.11	408812.11	1994		53630	1 Urbis LED	Axia 16 LED 500mA	28 Watts	5.00 Metres	Galvanised Steel	
Y	3	STREET LIGHTING	MILL PLACE	CLEETHORPES	530617.53	408778.25	1994		53631	1 Urbis LED	Axia 16 LED 500mA	28 Watts	5.00 Metres	Galvanised Steel	
Y	4	STREET LIGHTING	MILL PLACE	CLEETHORPES	530639.93	408750.53	1994		53632	1 Urbis LED	Axia 16 LED 500mA	28 Watts	5.00 Metres	Galvanised Steel	
Y	5	STREET LIGHTING	MILL PLACE	CLEETHORPES	530658.41	408760.91	1994		53633	1 Urbis LED	Axia 16 LED 500mA	28 Watts	5.00 Metres	Galvanised Steel	
Y	1	STREET LIGHTING	MILL ROAD	CLEETHORPES	530611.38	408561.12	1995		53634	1 Urbis LED	Teceo 24 LED 500mA	40 Watts	10.00 Metres	Galvanised Steel	
Y	2	STREET LIGHTING	MILL ROAD	CLEETHORPES	530586.06	408557.01	1988		53635	1 Urbis LED	Teceo 24 LED 500mA	40 Watts	8.00 Metres	Galvanised Steel	
Y	3	STREET LIGHTING	MILL ROAD	CLEETHORPES	530562.14	408544.29	1988		53636	1 Urbis LED	Teceo 24 LED 500mA	40 Watts	8.00 Metres	Galvanised Steel	
Y	4	STREET LIGHTING	MILL ROAD	CLEETHORPES	530535.56	408520.68	1988		53637	1 Urbis LED	axia 3.1 16 LED 620mA	32 Watts	8.00 Metres	Galvanised Steel	
Y	5	STREET LIGHTING	MILL ROAD	CLEETHORPES	530505.18	408513.15	1988		53638	1 Urbis LED	Teceo 24 LED 500mA	40 Watts	8.00 Metres	Galvanised Steel	
Y	6	STREET LIGHTING	MILL ROAD	CLEETHORPES	530479.49	408490.05	1988		53639	1 Urbis LED	axia 3.1 16 LED 620mA	32 Watts	8.00 Metres	Galvanised Steel	
Y	7	STREET LIGHTING	MILL ROAD	CLEETHORPES	530449.11	408482.65	1988		53640	1 Urbis LED	Teceo 24 LED 500mA	40 Watts	8.00 Metres	Galvanised Steel	
Y	8	STREET LIGHTING	MILL ROAD	CLEETHORPES	530426.45	408460.81	1988		53641	1 Urbis LED	Teceo 24 LED 500mA	40 Watts	8.00 Metres	Galvanised Steel	
Y	9	STREET LIGHTING	MILL ROAD	CLEETHORPES	530396.96	408454.04	1988		53642	1 Urbis LED	Teceo 24 LED 500mA	40 Watts	8.00 Metres	Galvanised Steel	
Y	10	STREET LIGHTING	MILL ROAD	CLEETHORPES	530380.12	408436.38	1988		53643	1 Urbis LED	Teceo 24 LED 500mA	40 Watts	8.00 Metres	Galvanised Steel	
Y	11	STREET LIGHTING	MILL ROAD	CLEETHORPES	530360.76	408434.17	1988		53644	1 Urbis LED	Teceo 24 LED 500mA	40 Watts	8.00 Metres	Galvanised Steel	
Y	12	STREET LIGHTING	MILL ROAD	CLEETHORPES	530340.51	408414.3	1988		53645	1 Urbis LED	Teceo 24 LED 500mA	40 Watts	5.00 Metres	Galvanised Steel	
Y	13	STREET LIGHTING	MILL ROAD	CLEETHORPES	530307.17	408405.14	1988		53646	1 Urbis LED	Teceo 24 LED 500mA	40 Watts	5.00 Metres	Galvanised Steel	
Y	14	STREET LIGHTING	MILL ROAD	CLEETHORPES	530281.6	408382.29	1988		53647	1 Urbis LED	Teceo 24 LED 500mA	40 Watts	5.00 Metres	Galvanised Steel	
Y	15	STREET LIGHTING	MILL ROAD	CLEETHORPES	530252.11	408374.89	1988		53648	1 Urbis LED	Teceo 24 LED 500mA	40 Watts	5.00 Metres	Galvanised Steel	
Y	16	STREET LIGHTING	MILL ROAD	CLEETHORPES	530230.21	408354.44	1988		53649	1 Urbis LED	Teceo 24 LED 500mA	40 Watts	5.00 Metres	Galvanised Steel	
Y	17	STREET LIGHTING	MILL ROAD	CLEETHORPES	530201.98	408347.55	1988		53650	1 Urbis LED	Teceo 24 LED 500mA	40 Watts	5.00 Metres	Galvanised Steel	
Y	18	STREET LIGHTING	MILL ROAD	CLEETHORPES	530175.02	408324.83	1988		53651	1 Urbis LED	Teceo 24 LED 500mA	40 Watts	5.00 Metres	Galvanised Steel	
Y	19	STREET LIGHTING	MILL ROAD	CLEETHORPES	530142.24	408315.52	1988		53652	1 Urbis LED	Teceo 24 LED 500mA	40 Watts	5.00 Metres	Galvanised Steel	
Y	20	STREET LIGHTING	MILL ROAD	CLEETHORPES	530125.78	408295.97	1988		53653	1 Urbis LED	Teceo 24 LED 500mA	40 Watts	8.00 Metres	Galvanised Steel	
Y	1	STREET LIGHTING	OOLE ROAD	CLEETHORPES	530770.55	408681.47	2016	31/03/2016	54413	Urbis	Axia 16 LED 350mA	19 Watts	6.00 Metres	Galvanised Steel	
Y	2	STREET LIGHTING	OOLE ROAD	CLEETHORPES	530774.51	408666.81	2016	31/03/2016	66465	1 Urbis LED	Teceo 24 LED 500mA	40 Watts	6.00 Metres	Galvanised Steel	
Y	3	STREET LIGHTING	OOLE ROAD	CLEETHORPES	530781.09	408655.83	2016	31/03/2016	54414	Urbis	Axia 16 LED 350mA	19 Watts	6.00 Metres	Galvanised Steel	
Y	4	STREET LIGHTING	OOLE ROAD	CLEETHORPES	530755.79	408638.44	2016	31/03/2016	54415	Urbis	Axia 16 LED 350mA	19 Watts	6.00 Metres	Galvanised Steel	
Y	5	STREET LIGHTING	OOLE ROAD	CLEETHORPES	530726.46	408617.97	2016	31/03/2016	54416	Urbis	Axia 16 LED 350mA	19 Watts	6.00 Metres	Galvanised Steel	
Y	6	STREET LIGHTING	OOLE ROAD	CLEETHORPES	530699.23	408599.35	2000		54417	Urbis	Axia 16 LED 350mA	19 Watts	6.00 Metres	Galvanised Steel	
Y	1	STREET LIGHTING	SEA ROAD	CLEETHORPES	530661.95	408934.36	2019	01/01/2019	70049	1 Urbis LED	Yoa Maxi 64 LED 700 mA	139 Watts	10.00 Metres	Galvanised Steel	
Y	2	STREET LIGHTING	SEA ROAD	CLEETHORPES	530673.82	408919.77	2019	01/01/2019	70050	1 Urbis LED	Yoa Maxi 64 LED 700 mA	139 Watts	10.00 Metres	Galvanised Steel	
Y	3	STREET LIGHTING	SEA ROAD	CLEETHORPES	530692.51	408959.98	2019	01/01/2019	70051	1 Urbis LED	Yoa Maxi 64 LED 700 mA	139 Watts	10.00 Metres	Galvanised Steel	
Y	4	STREET LIGHTING	SEA ROAD	CLEETHORPES	530700.96	408938.84	2019	01/01/2019	70052	1 Urbis LED	Yoa Maxi 64 LED 700 mA	139 Watts	10.00 Metres	Galvanised Steel	
Y	5	STREET LIGHTING	SEA ROAD	CLEETHORPES	530712.64	408974.64	2019	01/01/2019	70053	1 Urbis LED	Yoa Maxi 64 LED 700 mA	139 Watts	10.00 Metres	Galvanised Steel	
Y	6	STREET LIGHTING	SEA ROAD	CLEETHORPES	530729.76	408952.56	2019	01/01/2019	70054	1 Urbis LED	Yoa Maxi 64 LED 700 mA	139 Watts	10.00 Metres	Galvanised Steel	
Y	1	STREET LIGHTING	SHORT STREET	CLEETHORPES	530458.35	408820.65	1998		57178	Sugg	Rochester 48 LED	60 Watts	8.00 Metres	Steel	
Y	2	STREET LIGHTING	SHORT STREET	CLEETHORPES	530491.64	408829.89	1998		57179	Sugg	Rochester 48 LED	60 Watts	8.00 Metres	Steel	
Y	1	STREET LIGHTING	ST HUGHS AVENUE	CLEETHORPES	529935.99	408723.33	2007		57719	1 Urbis LED	Teceo 40 LED 500mA	64 Watts	9.00 Metres	Steel	
Y	2	STREET LIGHTING	ST HUGHS AVENUE	CLEETHORPES	529963.35	408703.51	2007		57720	1 Urbis LED	Teceo 40 LED 500mA	64 Watts	9.00 Metres	Steel	
Y	3	STREET LIGHTING	ST HUGHS AVENUE	CLEETHORPES	529972.21	408674.65	2007		57721	1 Urbis LED	Teceo 40 LED 500mA	64 Watts	9.00 Metres	Steel	
Y	4	STREET LIGHTING	ST HUGHS AVENUE	CLEETHORPES	529999.05	408654.66	2007		57722	Urbis	AXIA 3.2 32 LED 510mA	50 Watts	9.00 Metres	Steel	
Y	5	STREET LIGHTING	ST HUGHS AVENUE	CLEETHORPES	530009.74	408623.71	2007		57723	1 Urbis LED	Teceo 40 LED 500mA	64 Watts	9.00 Metres	Steel	
Y	6	STREET LIGHTING	ST HUGHS AVENUE	CLEETHORPES	530037.71	408602.13	2007		57724	Urbis	AXIA 3.2 32 LED 510mA	50 Watts	9.00 Metres	Steel	
Y	7	STREET LIGHTING	ST HUGHS AVENUE	CLEETHORPES	530046.87	408572.04	2007		57725	1 Urbis LED	Teceo 40 LED 500mA	64 Watts	9.00 Metres	Steel	
Y	8	STREET LIGHTING	ST HUGHS AVENUE	CLEETHORPES	530090.42	408517.81	2007		57726	1 Urbis LED	Teceo 40 LED 500mA	64 Watts	8.00 Metres	Steel	
Y	9	STREET LIGHTING	ST HUGHS AVENUE	CLEETHORPES	530112.32	408488.31	2007		57727	1 Urbis LED	Teceo 40 LED 500mA	64 Watts	9.00 Metres	Steel	
Y	1	STREET LIGHTING	ST PETERS AVENUE	CLEETHORPES	530421.25	408858.96	1994		57944	1 Urbis LED	Teceo 48 LED 500mA	79 Watts	8.00 Metres	Galvanised Steel	
Y	2	STREET LIGHTING	ST PETERS AVENUE	CLEETHORPES	530437.83	408836.43	1994		57945	1 Urbis LED	Teceo 48 LED 500mA	79 Watts	8.00 Metres	Galvanised Steel	
Y	3	STREET LIGHTING	ST PETERS AVENUE	CLEETHORPES	530446.69	408807.63	1994		57946	1 Urbis LED	Teceo 48 LED 500mA	79 Watts	8.00 Metres	Galvanised Steel	
Y	4	STREET LIGHTING	ST PETERS AVENUE	CLEETHORPES	530468.47	408793.39	2008		57947	1 Urbis LED	Teceo 48 LED 500mA	79 Watts	10.00 Metres	Steel	
Y	5	STREET LIGHTING	ST PETERS AVENUE	CLEETHORPES	530472.26	408771.43	1994		57948	1 Urbis LED	Teceo 48 LED 500mA	79 Watts	8.00 Metres	Galvanised Steel	
Y	6	STREET LIGHTING	ST PETERS AVENUE	CLEETHORPES	530498.33	408755.74	2024	11/07/2024	69937	Urbis	Teceo 48 LED 500mA	79 Watts	8.00 Metres	Galvanised Steel	
Y	7	STREET LIGHTING	ST PETERS AVENUE	CLEETHORPES	530503.65	408726.62	1994		57950	Urbis	AXIA 3.2 32 LED 630 mA	62 Watts	8.00 Metres	Galvanised Steel	
Y	8	STREET LIGHTING	ST PETERS AVENUE	CLEETHORPES	530527.2	408709.34	1994		57951	1 Urbis LED	Teceo 48 LED 500mA	79 Watts	8.00 Metres	Galvanised Steel	
Y	9	STREET LIGHTING	ST PETERS AVENUE	CLEETHORPES	530542.89	408689.59	1994		57952	1 Urbis LED	Teceo 48 LED 500mA	79 Watts	8.00 Metres	Galvanised Steel	
Y	10	STREET LIGHTING	ST PETERS AVENUE	CLEETHORPES	530551.88	408660.29	1994		57953	1 Urbis LED	Teceo 48 LED 500mA	79 Watts	8.00 Metres	Galvanised Steel	
Y	11	STREET LIGHTING	ST PETERS AVENUE	CLEETHORPES	530573.72	408644.56	1994		57954	1 Urbis LED	Teceo 48 LED 500mA	79 Watts	8.00 Metres	Galvanised Steel	
Y	12	STREET LIGHTING	ST PETERS AVENUE	CLEETHORPES	530593.09	408621.84	1994		57955	1 Urbis LED	Teceo 48 LED 500mA	79 Watts	8.00 Metres	Galvanised Steel	
Y	13	STREET LIGHTING	ST PETERS AVENUE	CLEETHORPES	530594.61	408601.65	2014		57956	1 Urbis LED	Teceo 48 LED 500mA	79 Watts	8.00 Metres	Galvanised Steel	
Y	14	STREET LIGHTING	ST PETERS AVENUE	CLEETHORPES	530609.67	408581.84	1994		57957	1 Urbis LED	Teceo 48 LED 500mA	79 Watts	10.00 Metres	Galvanised Steel	
Y	15	STREET LIGHTING	ST PETERS AVENUE	CLEETHORPES	530634.99	408563.8	1994		57958	1 Urbis LED	Teceo 48 LED 500mA	79 Watts	10.00 Metres	Galvanised Steel	
Y	16	STREET LIGHTING	ST PETERS AVENUE	CLEETHORPES	530638	408541.47	1994		57959	1 Urbis LED	Teceo 48 LED 500mA	79 Watts	8.00 Metres	Galvanised Steel	
Y	17	STREET LIGHTING	ST PETERS AVENUE	CLEETHORPES	530662.68	408523.43	1994		57960	Urbis	AXIA 3.2 32 LED 630 mA	62 Watts	8.00 Metres	Galvanised Steel	
Y	18	STREET LIGHTING	ST PETERS AVENUE	CLEETHORPES	530680.15	408498.18	1994		57961	1 Urbis LED	Teceo 48 LED 500mA	79 Watts	8.00 Metres	Galvanised Steel	
Y	19	STREET LIGHTING	ST PETERS AVENUE	CLEETHORPES	530698.12	408478.37	1994		57962	1 Urbis LED	Teceo 48 LED 500mA	79 Watts	8.00 Metres	Galvanised Steel	
Y	20	STREET LIGHTING	ST PETERS AVENUE	CLEETHORPES	530709.64	408446.09	1994		57963	1 Urbis LED	Teceo 48 LED 700mA	104 Watts	8.00 Metres	Galvanised Steel	
Y	21	STREET LIGHTING	ST PETERS AVENUE	CLEETHORPES	530734.45	408430.46	1994		57964	1 Urbis LED	Teceo 48 LED 700mA	104 Watts	8.00 Metres	Galvanised Steel	
Y	22	STREET LIGHTING	ST PETERS AVENUE	CLEETHORPES	530744.19	408399.38	2014		57965	1 Urbis LED	Teceo 48 LED 700mA	104 Watts	8.00 Metres	Galvanised Steel	
Y	23	STREET LIGHTING	ST PETERS AVENUE	CLEETHORPES	530758.24	408380.33	1994		57966	Urbis	AXIA 3.3 48 LED 540mA	78 Watts	8.00 Metres	Galvanised Steel	
Y	1	STREET LIGHTING	WESTFIELD GROVE	CLEETHORPES	529969.71	408630.98	1989		60394	1 Urbis LED	Axia 16 LED 500mA	28 Watts	5.00 Metres	Galvanised Steel	
Y	1	STREET LIGHTING	WOLLASTON ROAD	CLEETHORPES	530043.62	408798.26	1994		61081	1 Urbis LED	Teceo 48 LED 700mA	104 Watts	12.00 Metres	Galvanised Steel	
Y	2	STREET LIGHTING	WOLLASTON ROAD	CLEETHORPES	530062.6	408773.13	1994		61082	1 Urbis LED	Teceo 24 LED 500mA	40 Watts	8.00 Metres	Galvanised Steel	
Y	3	STREET LIGHTING	WOLLASTON ROAD	CLEETHORPES	530086.4	408760.79	1994		61083	1 Urbis LED	Teceo 24 LED 500mA	40 Watts	8.00 Metres	Galvanised Steel	
Y	4	STREET LIGHTING	WOLLASTON ROAD	CLEETHORPES	530098.05	408725.66	1994		61084	1 Urbis LED	Teceo 24 LED 500mA	40 Watts	8.00 Metres	Galvanised Steel	
Y	5	STREET LIGHTING	WOLLASTON ROAD	CLEETHORPES	530126.15	408707.06	1994		61085	1 Urbis LED	Teceo 24 LED 500mA	40 Watts	8.00 Metres	Galvanised Steel	
Y	6	STREET LIGHTING	WOLLASTON ROAD	CLEETHORPES	530134.5	408677.63	1994		61086	1 Urbis LED	Teceo 24 LED 500mA	40 Watts	8.00 Metres	Galvanised Steel	
Y	7	STREET LIGHTING	WOLLASTON ROAD	CLEETHORPES	530161.46	408660.09	1994		61087	1 Urbis LED	Teceo 24 LED 500mA	40 Watts	8.00 Metres	Galvanised Steel	
Y	1	STREET LIGHTING	YARRA ROAD	CLEETHORPES	530787.13	408733.77	1995		61376	Urbis	Axia 16 LED 350mA	19 Watts	5.00 Metres	Galvanised Steel	
Y	2	STREET LIGHTING	YARRA ROAD	CLEETHORPES	530767.51	408708.9	1995		61377	Urbis	Axia 16 LED 350mA	19 Watts	5.00 Metres	Galvanised Steel	
Y	3	STREET LIGHTING	YARRA ROAD	CLEETHORPES	530738.52	408698.84	1995		61378	Urbis	Axia 16 LED 350mA	19 Watts	5.00 Metres	Galvanised Steel	
Y	4	STREET LIGHTING	YARRA ROAD	CLEETHORPES	530718.9	408674.6	1995		61379	Urbis	Axia 16 LED 350mA	19 Watts	5.00 Metres	Galvanised Steel	
Y	5	STREET LIGHTING	YARRA ROAD	CLEETHORPES	530692.83	408666.56	1995		61380	Urbis	Axia 16 LED 350mA	19 Watts	5.00 Metres	Galvanised Steel	
Y	6	STREET LIGHTING	YARRA ROAD	CLEETHORPES	530683.59	408640.04	1995		61381	Urbis	Axia 16 LED 350mA	19 Watts	5.00 Metres	Galvanised Steel	
Y	7	STREET LIGHTING	YARRA ROAD	CLEETHORPES	530678.9	408608.91	1995		61382	Urbis	Axia 16 LED 350mA	19 Watts	5.00 Metres	Galvanised Steel	
Y	1	STREET LIGHTING	CLAYMORE CLOSE	CLEETHORPES	530265.31	408576.13	2013		46145	Urbis	Axia 16 LED 350mA	19 Watts	6.00 Metres	Steel	
Y	2	STREET LIGHTING	CLAYMORE CLOSE	CLEETHORPES	530238.58	408555.97	2013		46146	Urbis	Axia 16 LED 350mA	19 Watts	6.00 Metres	Steel	
Y	3	STREET LIGHTING	CLAYMORE CLOSE	CLEETHORPES	530246.73	408530.65	2013		46147	Urbis	Axia 16 LED 350mA	19 Watts	6.00 Metres	Steel	
Y	4	STREET LIGHTING	CLAYMORE CLOSE	CLEETHORPES	530250.47	408508.57	2013		46148	Urbis	Axia 16 LED 350mA	19 Watts	6.00 Metres	Steel	
Y	5	STREET LIGHTING	CLAYMORE CLOSE	CLEETHORPES	530273.29	408495.15	2013		46149	Urbis	Axia 16 LED 350mA	19 Watts	6.00 Metres	Steel	

Y	6	STREET LIGHTING	CLAYMORE CLOSE	CLEETHORPES	530277.6	408470.51	2002		46150	Urbis	Axia 16 LED 350mA	19 Watts	6.00 Metres	Stainless Steel	
Y	7	STREET LIGHTING	CLAYMORE CLOSE	CLEETHORPES	530247.75	408443.78	2013		46151	Urbis	Axia 16 LED 350mA	19 Watts	6.00 Metres	Steel	
Y	8	STREET LIGHTING	CLAYMORE CLOSE	CLEETHORPES	530229.29	408434.89	2013		46152	Urbis	Axia 16 LED 350mA	19 Watts	6.00 Metres	Steel	
Y	9	STREET LIGHTING	CLAYMORE CLOSE	CLEETHORPES	530279.77	408432.03	2002		46153	Urbis	Axia 16 LED 350mA	19 Watts	6.00 Metres	Galvanised Steel	
Y	10	STREET LIGHTING	CLAYMORE CLOSE	CLEETHORPES	530203.58	408487.1	2013		46154	Urbis	Axia 16 LED 350mA	19 Watts	6.00 Metres	Steel	
Y	11	STREET LIGHTING	CLAYMORE CLOSE	CLEETHORPES	530203.45	408500.06	2005		46155	Urbis	Axia 16 LED 350mA	19 Watts	6.00 Metres	Stainless Steel	
Y	12	STREET LIGHTING	CLAYMORE CLOSE	CLEETHORPES	530224.82	408516.67	2013		46156	Urbis	Axia 16 LED 350mA	19 Watts	6.00 Metres	Steel	
Y	13	STREET LIGHTING	CLAYMORE CLOSE	CLEETHORPES	530221.7	408561.23	2013		46157	Urbis	Axia 16 LED 350mA	19 Watts	6.00 Metres	Steel	
Y	14	STREET LIGHTING	CLAYMORE CLOSE	CLEETHORPES	530199.67	408571.37	2013		46158	Urbis	Axia 16 LED 350mA	19 Watts	6.00 Metres	Steel	
Y	15	STREET LIGHTING	CLAYMORE CLOSE	CLEETHORPES	530173.96	408560.21	2013		46159	Urbis	Axia 16 LED 350mA	19 Watts	6.00 Metres	Steel	
Y	16	STREET LIGHTING	CLAYMORE CLOSE	CLEETHORPES	530170.28	408542.83	2013		46160	Urbis	Axia 16 LED 350mA	19 Watts	6.00 Metres	Steel	
Y	1	STREET LIGHTING	SAXON CRESCENT	CLEETHORPES	530005.15	408685.79	2018	19/06/2018	56624	Urbis	Axia 16 LED 350mA	19 Watts	6.00 Metres	Galvanised Steel	
Y	2	STREET LIGHTING	SAXON CRESCENT	CLEETHORPES	530026.49	408676.33	2007		56625	1 Urbis LED	Axia 16 LED 500mA	28 Watts	6.00 Metres	Galvanised Steel	
Y	3	STREET LIGHTING	SAXON CRESCENT	CLEETHORPES	530049.04	408695.53	2018	19/06/2018	67092	Urbis	Axia 16 LED 350mA	19 Watts	6.00 Metres	Galvanised Steel	
Y	4	STREET LIGHTING	SAXON CRESCENT	CLEETHORPES	530023.38	408653.51	1987		56626	1 Urbis LED	Axia 16 LED 500mA	28 Watts	5.00 Metres	Galvanised Steel	
Y	1	STREET LIGHTING	ELM AVENUE	CLEETHORPES	530432.05	408715.85	2002		66419	1 Urbis LED	Axia 16 LED 500mA	28 Watts	5.00 Metres	Stainless Steel	
Y	2	STREET LIGHTING	ELM AVENUE	CLEETHORPES	530415.61	408738.53	2002		66418	1 Urbis LED	Axia 16 LED 500mA	28 Watts	5.00 Metres	Stainless Steel	
Y	3	STREET LIGHTING	ELM AVENUE	CLEETHORPES	530393.34	408754.31	2002		66417	1 Urbis LED	Axia 16 LED 500mA	28 Watts	5.00 Metres	Stainless Steel	
Y	1	STREET LIGHTING	ALEXANDRA ROAD	CLEETHORPES	530932.38	408634.85	2019	01/01/2019	69812	1 Urbis LED	Yoa Maxi 64 LED 700 mA	139 Watts	10.00 Metres	Galvanised Steel	
Y	2	STREET LIGHTING	ALEXANDRA ROAD	CLEETHORPES	530904.37	408624.72	2019	01/01/2019	69817	1 Urbis LED	Yoa Maxi 64 LED 700 mA	139 Watts	10.00 Metres	Galvanised Steel	
Y	3	STREET LIGHTING	ALEXANDRA ROAD	CLEETHORPES	530911.78	408639.58	2019	01/01/2019	69818	1 Urbis LED	Yoa Maxi 64 LED 700 mA	139 Watts	10.00 Metres	Galvanised Steel	
Y	4	STREET LIGHTING	ALEXANDRA ROAD	CLEETHORPES	530858.37	408665.6	2019	01/01/2019	69819	1 Urbis LED	Yoa Maxi 64 LED 700 mA	139 Watts	10.00 Metres	Galvanised Steel	
Y	5	STREET LIGHTING	ALEXANDRA ROAD	CLEETHORPES	530871.12	408675.04	2019	01/01/2019	69820	1 Urbis LED	Yoa Maxi 64 LED 700 mA	139 Watts	10.00 Metres	Galvanised Steel	
Y	6	STREET LIGHTING	ALEXANDRA ROAD	CLEETHORPES	530830.13	408696.95	2019	01/01/2019	69821	1 Urbis LED	Yoa Maxi 64 LED 700 mA	139 Watts	10.00 Metres	Galvanised Steel	
Y	7	STREET LIGHTING	ALEXANDRA ROAD	CLEETHORPES	530843.38	408706.22	2019	01/01/2019	69822	1 Urbis LED	Yoa Maxi 64 LED 700 mA	139 Watts	10.00 Metres	Galvanised Steel	
Y	8	STREET LIGHTING	ALEXANDRA ROAD	CLEETHORPES	530802.22	408729.63	2019	01/01/2019	69823	1 Urbis LED	Yoa Maxi 64 LED 700 mA	139 Watts	10.00 Metres	Galvanised Steel	
Y	9	STREET LIGHTING	ALEXANDRA ROAD	CLEETHORPES	530813.93	408739.48	2019	01/01/2019	69824	1 Urbis LED	Yoa Maxi 64 LED 700 mA	139 Watts	10.00 Metres	Galvanised Steel	
Y	10	STREET LIGHTING	ALEXANDRA ROAD	CLEETHORPES	530773.89	408760.4	2019	01/01/2019	69825	1 Urbis LED	Yoa Maxi 64 LED 700 mA	139 Watts	10.00 Metres	Galvanised Steel	
Y	11	STREET LIGHTING	ALEXANDRA ROAD	CLEETHORPES	530786.59	408770.32	2019	01/01/2019	69826	1 Urbis LED	Yoa Maxi 64 LED 700 mA	139 Watts	10.00 Metres	Galvanised Steel	
Y	12	STREET LIGHTING	ALEXANDRA ROAD	CLEETHORPES	530742.93	408795.5	2019	01/01/2019	69827	1 Urbis LED	Yoa Maxi 64 LED 700 mA	139 Watts	10.00 Metres	Galvanised Steel	
Y	13	STREET LIGHTING	ALEXANDRA ROAD	CLEETHORPES	530756.11	408804.47	2019	01/01/2019	69828	1 Urbis LED	Yoa Maxi 64 LED 700 mA	139 Watts	10.00 Metres	Galvanised Steel	
Y	14	STREET LIGHTING	ALEXANDRA ROAD	CLEETHORPES	530714.09	408827.82	2019	01/01/2019	69829	1 Urbis LED	Yoa Maxi 64 LED 700 mA	139 Watts	10.00 Metres	Galvanised Steel	
Y	15	STREET LIGHTING	ALEXANDRA ROAD	CLEETHORPES	530726.63	408837.66	2019	01/01/2019	69830	1 Urbis LED	Yoa Maxi 64 LED 700 mA	139 Watts	10.00 Metres	Galvanised Steel	
Y	16	STREET LIGHTING	ALEXANDRA ROAD	CLEETHORPES	530683.77	408862.51	2019	01/01/2019	69831	1 Urbis LED	Yoa Maxi 64 LED 700 mA	139 Watts	10.00 Metres	Galvanised Steel	
Y	17	STREET LIGHTING	ALEXANDRA ROAD	CLEETHORPES	530695.6	408872.51	2019	01/01/2019	69832	1 Urbis LED	Yoa Maxi 64 LED 700 mA	139 Watts	10.00 Metres	Galvanised Steel	
Y	18	STREET LIGHTING	ALEXANDRA ROAD	CLEETHORPES	530658.83	408892.15	2019	01/01/2019	69833	1 Urbis LED	Yoa Maxi 64 LED 700 mA	139 Watts	10.00 Metres	Galvanised Steel	
Y	19	STREET LIGHTING	ALEXANDRA ROAD	CLEETHORPES	530668.48	408899.37	2019	01/01/2019	69834	1 Urbis LED	Yoa Maxi 64 LED 700 mA	139 Watts	10.00 Metres	Galvanised Steel	
Y	20	STREET LIGHTING	ALEXANDRA ROAD	CLEETHORPES	530627.61	408924.68	2019	01/01/2019	69835	1 Urbis LED	Yoa Maxi 64 LED 700 mA	139 Watts	10.00 Metres	Galvanised Steel	
Y	21	STREET LIGHTING	ALEXANDRA ROAD	CLEETHORPES	530639.69	408935.69	2019	01/01/2019	69836	1 Urbis LED	Yoa Maxi 64 LED 700 mA	139 Watts	10.00 Metres	Galvanised Steel	
Y	22	STREET LIGHTING	ALEXANDRA ROAD	CLEETHORPES	530598.75	408965.06	2019	01/01/2019	69837	1 Urbis LED	Yoa Maxi 64 LED 700 mA	139 Watts	10.00 Metres	Galvanised Steel	
Y	1	STREET LIGHTING	FREDERICK STREET	CLEETHORPES	530266.37	408809.84	1995		48934	1 Urbis LED	Teceo 24 LED 500mA	40 Watts	6.00 Metres	Galvanised Steel	
Y	2	STREET LIGHTING	FREDERICK STREET	CLEETHORPES	530280.29	408773.77	2018	02/08/2018	66969	Urbis	Teceo 24 LED 500mA	40 Watts	6.00 Metres	Galvanised Steel	
Y	1	STREET LIGHTING	GLEBE ROAD	CLEETHORPES	530547.1	408553.58	1985		49279	1 Urbis LED	Axia 16 LED 500mA	28 Watts	5.00 Metres	Galvanised Steel	
Y	2	STREET LIGHTING	GLEBE ROAD	CLEETHORPES	530520.64	408571.37	1985		49280	1 Urbis LED	Axia 16 LED 500mA	28 Watts	5.00 Metres	Galvanised Steel	
Y	3	STREET LIGHTING	GLEBE ROAD	CLEETHORPES	530511.78	408601.69	1985		49281	1 Urbis LED	Axia 16 LED 500mA	28 Watts	5.00 Metres	Galvanised Steel	
Y	4	STREET LIGHTING	GLEBE ROAD	CLEETHORPES	530484.57	408619.73	1985		49282	1 Urbis LED	Axia 16 LED 500mA	28 Watts	5.00 Metres	Galvanised Steel	
Y	5	STREET LIGHTING	GLEBE ROAD	CLEETHORPES	530480.52	408643.84	1985		49283	1 Urbis LED	Axia 16 LED 500mA	28 Watts	5.00 Metres	Galvanised Steel	
Y	1	STREET LIGHTING	OSBORNE STREET	CLEETHORPES	530558.95	408886.17	1977		54494	1 Urbis LED	Teceo 24 LED 500mA	40 Watts	8.00 Metres	Galvanised Steel	
Y	1	STREET LIGHTING	MARKET STREET	CLEETHORPES	530632.49	408905.48	1998		53325	Sugg	Rochester 48 LED	60 Watts	8.00 Metres	Steel	
Y	2	STREET LIGHTING	MARKET STREET	CLEETHORPES	530606.24	408883.41	1998		53326	Sugg	Rochester 48 LED	60 Watts	8.00 Metres	Steel	
Y	3	STREET LIGHTING	MARKET STREET	CLEETHORPES	530589.76	408864.69	1998		53327	Sugg	Rochester 48 LED	60 Watts	8.00 Metres	Steel	
Y	4	STREET LIGHTING	MARKET STREET	CLEETHORPES	530577.21	408871.72	1998		53328	Sugg	Rochester 48 LED	60 Watts	8.00 Metres	Steel	
Y	5	STREET LIGHTING	MARKET STREET	CLEETHORPES	530552.65	408861.53	1998		53329	Sugg	Rochester 48 LED	60 Watts	8.00 Metres	Steel	
Y	6	STREET LIGHTING	MARKET STREET	CLEETHORPES	530569.99	408845.27	1998		53330	Sugg	Rochester 48 LED	60 Watts	8.00 Metres	Steel	
Y	7	STREET LIGHTING	MARKET STREET	CLEETHORPES	530545.31	408847.8	1998		53331	Sugg	Windsor 24 LED	50 Watts	5.00 Metres	Steel	
Y	8	STREET LIGHTING	MARKET STREET	CLEETHORPES	530514.43	408839.07	1998		53332	Sugg	Windsor 24 LED	50 Watts	5.00 Metres	Steel	
Y	9	STREET LIGHTING	MARKET STREET	CLEETHORPES	530520.25	408825.52	1998		53333	Sugg	Rochester 48 LED	60 Watts	8.00 Metres	Steel	
Y	10	STREET LIGHTING	MARKET STREET	CLEETHORPES	530518.48	408853.31	1998		53334	Sugg	Rochester 48 LED	60 Watts	8.00 Metres	Steel	
Y	1	STREET LIGHTING	FOOTPATH BETWEEN MARKET STREET	CLEETHORPES	530538.75	408883.31	1963		48763	Urbis	Axia 16 LED 350mA	19 Watts	5.00 Metres	Steel	
Y	1	STREET LIGHTING	MAEGAN WAY	CLEETHORPES	530227.99	408467.41	2011	02/09/2011	53068	Urbis	Axia 8 LED 350mA	10 Watts	6.00 Metres	Steel	
Y	2	STREET LIGHTING	MAEGAN WAY	CLEETHORPES	530196.34	408508.25	2006		53069	Urbis	Axia 8 LED 350mA	10 Watts	6.00 Metres	Galvanised Steel	
Y	3	STREET LIGHTING	MAEGAN WAY	CLEETHORPES	530185.18	408527.86	2006		53070	Urbis	Axia 8 LED 350mA	10 Watts	6.00 Metres	Galvanised Steel	
Y	5	STREET LIGHTING	MAEGAN WAY	CLEETHORPES	530155.83	408520.76	2007		53071	Urbis	Axia 8 LED 350mA	10 Watts	5.00 Metres	Galvanised Steel	
Y	6	STREET LIGHTING	MAEGAN WAY	CLEETHORPES	530187.35	408479.5	2000		53072	1 Urbis LED	Axia 16 LED 500mA	28 Watts	6.00 Metres	Galvanised Steel	
Y	1	STREET LIGHTING	CUTTLEBY	CLEETHORPES	530663.13	408684.09	1994		47208	Urbis	Axia 16 LED 350mA	19 Watts	5.00 Metres	Galvanised Steel	
Y	2	STREET LIGHTING	CUTTLEBY	CLEETHORPES	530667.51	408651.72	1994		47209	Urbis	Axia 16 LED 350mA	19 Watts	5.00 Metres	Galvanised Steel	
Y	3	STREET LIGHTING	CUTTLEBY	CLEETHORPES	530665.56	408615.72	1994		47210	Urbis	Axia 16 LED 350mA	19 Watts	5.00 Metres	Galvanised Steel	
Y	1	STREET LIGHTING	ST PETERS AVENUE MINI	CLEETHORPES	530771.03	408380.59	1988		57974	1 Urbis LED	Teceo 24 LED 500mA	40 Watts	8.00 Metres	Galvanised Steel	
Y	2	STREET LIGHTING	ST PETERS AVENUE MINI	CLEETHORPES	530786.67	408369.09	1988		57975	1 Urbis LED	Teceo 24 LED 500mA	40 Watts	8.00 Metres	Galvanised Steel	
Y	3	STREET LIGHTING	ST PETERS AVENUE MINI	CLEETHORPES	530777.56	408359.21	1988		57976	1 Urbis LED	Teceo 24 LED 500mA	40 Watts	8.00 Metres	Galvanised Steel	
Y	4	STREET LIGHTING	ST PETERS AVENUE MINI	CLEETHORPES	530762.42	408367.29	1988		57977	Urbis	AXIA 3.2 32 LED 510mA	50 Watts	8.00 Metres	Galvanised Steel	
Y	1	STREET LIGHTING	YARRA ROAD CAR PARK	CLEETHORPES	530735.41	408713.27	2018	31/10/2018	68419	Urbis	Teceo 24 LED 500mA	40 Watts	6.00 Metres	Galvanised Steel	
Y	2	STREET LIGHTING	YARRA ROAD CAR PARK	CLEETHORPES	530705.37	408706.98	2018	31/10/2018	68422	Urbis	Teceo 24 LED 500mA	40 Watts	6.00 Metres	Galvanised Steel	
Y	1	STREET LIGHTING	DOLPHIN GARDENS	CLEETHORPES	530624	408961	2001		47494	1 Urbis LED	Axia 16 LED 500mA	28 Watts	5.00 Metres	Galvanised Steel	
Y	2	STREET LIGHTING	DOLPHIN GARDENS	CLEETHORPES	530646	408977	2001		47495	1 Urbis LED	Axia 16 LED 500mA	28 Watts	5.00 Metres	Galvanised Steel	
Y	1	STREET LIGHTING	THE GATHERUMS	CLEETHORPES	530077.67	408371.44	1998		58994	Urbis	Axia 16 LED 350mA	19 Watts	5.00 Metres	Steel	
Y	2	STREET LIGHTING	THE GATHERUMS	CLEETHORPES	530107.67	408379.1	1998		58995	Urbis	Axia 16 LED 350mA	19 Watts	5.00 Metres	Steel	
Y	3	STREET LIGHTING	THE GATHERUMS	CLEETHORPES	530123.11	408403.08	1998		58996	Urbis	Axia 16 LED 350mA	19 Watts	5.00 Metres	Steel	
Y	4	STREET LIGHTING	THE GATHERUMS	CLEETHORPES	530158.3	408413.91	1998		58997	Urbis	Axia 16 LED 350mA	19 Watts	5.00 Metres	Steel	
Y	5	STREET LIGHTING	THE GATHERUMS	CLEETHORPES	530184.5	408429.41	1998		58998	Urbis	Axia 16 LED 350mA	19 Watts	5.00 Metres	Steel	
Y	1	STREET LIGHTING	COTSWOLD CLOSE	CLEETHORPES	530224.08	407069.63	2011		46781	Urbis	Axia 16 LED 350mA	19 Watts	6.00 Metres	Steel	
Y	2	STREET LIGHTING	COTSWOLD CLOSE	CLEETHORPES	530211.99	407093.9	2011		46782	Urbis	Axia 16 LED 350mA	19 Watts	6.00 Metres	Steel	
Y	3	STREET LIGHTING	COTSWOLD CLOSE	CLEETHORPES	530212.87	407116.94	2011		46783	Urbis	Axia 16 LED 350mA	19 Watts	6.00 Metres	Steel	
Y	4	STREET LIGHTING	COTSWOLD CLOSE	CLEETHORPES	530231.4	407128.59	2011		46784	Urbis	Axia 16 LED 350mA	19 Watts	6.00 Metres	Steel	
Y	1	STREET LIGHTING	FOOTPATH BETWEEN CEDAR CLOSE	CLEETHORPES	529840.3	406692.81	1997		48694	1 Urbis LED	Axia 16 LED 500mA	28 Watts	5.00 Metres	Galvanised Steel	
Y	1	STREET LIGHTING	ASHBY ROAD	CLEETHORPES	529872.29	407413.61	1997		43412	1 Urbis LED	Axia 16 LED 500mA	28 Watts	6.00 Metres	Galvanised Steel	
Y	2	STREET LIGHTING	ASHBY ROAD	CLEETHORPES	529904.82	407402.97	1997		43413	1 Urbis LED	Axia 16 LED 500mA	28 Watts	6.00 Metres	Galvanised Steel	
Y	3	STREET LIGHTING	ASHBY ROAD	CLEETHORPES	529944.57	407415.32	1997		43414	1 Urbis LED	Axia 16 LED 500mA	28 Watts	6.00 Metres	Galvanised Steel	
Y	4	STREET LIGHTING	ASHBY ROAD	CLEETHORPES	529980.14	407405.82	1997		43415	1 Urbis LED	Axia 16 LED 500mA	28 Watts	6.00 Metres	Galvanised Steel	
Y	5	STREET LIGHTING	ASHBY ROAD	CLEETHORPES	529994.31	407373.8	1997		43416	1 Urbis LED	Axia 16 LED 500mA	28 Watts	6.00 Metres	Galvanised Steel	
Y	6	STREET LIGHTING	ASHBY ROAD	CLEETHORPES	530010.26	407344.37	1997		43417	1 Urbis LED	Axia 16 LED 500mA	28 Watts	6.00 Metres	Galvanised Steel	
Y	7	STREET LIGHTING	ASHBY ROAD	CLEETHORPES	530004.44	407327.78	1997		43418	1 Urbis LED	Axia 16 LED 500mA	28 Watts	6.00 Metres	Galvanised Steel	
Y	8	STREET LIGHTING	ASHBY ROAD	CLEETHORPES	529975.58	407282.47	1997		43419	1 Urbis LED	Axia 16 LED 500mA	28 Watts	6.00 Metres	Galvanised Steel	
Y	9	STREET LIGHTING	ASHBY ROAD	CLEETHORPES	529939.38	407263.92	1997		43420	1 Urbis LED	Axia 16 LED 500mA	28 Watts	6.00 Metres	Galvanised Steel	
Y	10	STREET LIGHTING	ASHBY ROAD	CLEETHORPES	529911.78	407239.68	1997		43421	1 Urbis LED	Axia 16 LED 500mA	28 Watts	6.00 Metres	Galvanised Steel	
Y	11	STREET LIGHTING	ASHBY ROAD	CLEETHORPES	529870.36	407223.28	1997		43422	1 Urbis LED	Axia 16 LED 500mA	28 Watts	6.00 Metres	Galvanised Steel	
Y	1	STREET LIGHTING	BEAUFORT CRESCENT	CLEETHORPES	529974.13	407029.34	1981		43859	1 Urbis LED	Axia 16 LED 500mA	28 Watts	5.00 Metres	Galvanised Steel	
Y	2	STREET LIGHTING	BEAUFORT CRESCENT	CLEETHORPES	529968.31	407008.01	1981		43860	1 Urbis LED	Axia 16 LED 500mA	28 Watts	5.00 Metres	Galvanised Steel	
Y	3	STREET LIGHTING	BEAUFORT CRESCENT	CLEETHORPES	529941.22	406985.04	1981		43861	1 Urbis LED	Axia 16 LED 500mA	28 Watts	5.00 Metres	Galvanised Steel	
Y	4	STREET LIGHTING	BEAUFORT CRESCENT	CLEETHORPES	529910.16	406965.04	2004		43862	1 Urbis LED	Axia 16 LED 500mA	28 Watts	6.00 Metres	Stainless Steel	
Y	5	STREET LIGHTING	BEAUFORT CRESCENT	CLEETHORPES	529881.86	406973.49	1981		43863	1 Urbis LED	Axia 16 LED 500mA	28 Watts	5.00 Metres	Galvanised Steel	
Y	6	STREET LIGHTING	BEAUFORT CRESCENT	CLEETHORPES	529845.15	406963.87	1981		43864	1 Urbis LED	Axia 16 LED 500mA	28 Watts	5.00 Metres	Galvanised Steel	
Y	7	STREET LIGHTING	BEAUFORT CRESCENT	CLEETHORPES	529823.89	406963.04	1981		43865	1 Urbis LED	Axia 16 LED 500mA	28 Watts	5.00 Metres	Galvanised Steel	
Y	8	STREET LIGHTING	BEAUFORT CRESCENT	CLEETHORPES	529799.71	406942.22	1981		43866	1 Urbis LED	Axia 16 LED 500mA	28 Watts	5.00 Metres	Galvanised Steel	
Y	1	STREET LIGHTING	BEECH WAY	CLEETHORPES	529744.47	406698.39	1981		43901	Urbis	Axia 16 LED 350mA	19 Watts	5.00 Metres	Galvanised Steel	
Y	2	STREET LIGHTING	BEECH WAY	CLEETHORPES	529718.65	406703.01	1981		43902	Urbis	Axia 16 LED 350mA	19 Watts	5.00 Metres	Galvanised Steel	
Y	3	STREET LIGHTING	BEECH WAY	CLEETHORPES	529709.16	406680.22	2002		43903	Urbis	Axia 16 LED 350mA	19 Watts	5.00 Metres	Stainless Steel	
Y	4	STREET LIGHTING	BEECH WAY	CLEETHORPES	529724.1	406667.1	2002		43904	Urbis	Axia 16 LED 350mA	19 Watts	5.00 Metres	Stainless Steel	
Y	5	STREET LIGHTING	BEECH WAY	CLEETHORPES	529705.46	406660.53	2002		43905	Urbis	Axia 16 LED 350mA	19 Watts	5.00 Metres	Stainless Steel	
Y	6	STREET LIGHTING	BEECH WAY	CLEETHORPES	529686.33	406662.92	2002		43906	Urbis	Axia 16 LED 350mA	19 Watts	5.00 Metres	Stainless Steel	

Y	7	STREET LIGHTING	BEECH WAY	CLEETHORPES	529681	406685	2003		43907	Urbis	Axia 16 LED 350mA	19 Watts	5.00 Metres	Stainless Steel	
Y	1	STREET LIGHTING	BELMONT CLOSE	CLEETHORPES	529901.35	407263.6	2014	15/11/2014	43979	Urbis	Axia 16 LED 350mA	19 Watts	6.00 Metres	Galvanised Steel	
Y	2	STREET LIGHTING	BELMONT CLOSE	CLEETHORPES	529887.3	407284.67	2014	15/11/2014	43980	Urbis	Axia 16 LED 350mA	19 Watts	6.00 Metres	Galvanised Steel	
Y	3	STREET LIGHTING	BELMONT CLOSE	CLEETHORPES	529859.45	407292.27	2014	15/11/2014	43981	Urbis	Axia 16 LED 350mA	19 Watts	6.00 Metres	Galvanised Steel	
Y	4	STREET LIGHTING	BELMONT CLOSE	CLEETHORPES	529872.62	407306.89	2014	15/11/2014	43982	Urbis	Axia 16 LED 350mA	19 Watts	6.00 Metres	Galvanised Steel	
Y	1	STREET LIGHTING	BELVOIR ROAD	CLEETHORPES	529922.24	407085.7	1988		44000	1 Urbis LED	Teceo 48 LED 500mA	79 Watts	10.00 Metres	Galvanised Steel	
Y	2	STREET LIGHTING	BELVOIR ROAD	CLEETHORPES	529950.85	407060.7	1988		44001	1 Urbis LED	Teceo 48 LED 500mA	79 Watts	10.00 Metres	Galvanised Steel	
Y	3	STREET LIGHTING	BELVOIR ROAD	CLEETHORPES	529985.66	407048.62	1988		44002	1 Urbis LED	Teceo 48 LED 500mA	79 Watts	10.00 Metres	Galvanised Steel	
Y	4	STREET LIGHTING	BELVOIR ROAD	CLEETHORPES	530021.86	407038.62	1988		44003	1 Urbis LED	Teceo 48 LED 500mA	79 Watts	10.00 Metres	Galvanised Steel	
Y	5	STREET LIGHTING	BELVOIR ROAD	CLEETHORPES	530057.5	407020.77	1988		44004	1 Urbis LED	Teceo 48 LED 500mA	79 Watts	10.00 Metres	Galvanised Steel	
Y	6	STREET LIGHTING	BELVOIR ROAD	CLEETHORPES	530082.56	406987.8	1988		44005	1 Urbis LED	Teceo 48 LED 500mA	79 Watts	10.00 Metres	Galvanised Steel	
Y	7	STREET LIGHTING	BELVOIR ROAD	CLEETHORPES	530103.96	406960.01	1988		44006	1 Urbis LED	Teceo 48 LED 500mA	79 Watts	10.00 Metres	Galvanised Steel	
Y	8	STREET LIGHTING	BELVOIR ROAD	CLEETHORPES	530130.16	406924.95	1988		44007	1 Urbis LED	Teceo 48 LED 500mA	79 Watts	10.00 Metres	Galvanised Steel	
Y	9	STREET LIGHTING	BELVOIR ROAD	CLEETHORPES	530135.28	406896.64	1988		44008	1 Urbis LED	Teceo 48 LED 500mA	79 Watts	10.00 Metres	Galvanised Steel	
Y	10	STREET LIGHTING	BELVOIR ROAD	CLEETHORPES	530123.15	406863.33	2021	12/02/2021	68286	Urbis	AXIA 3.2 32 LED 630 mA	62 Watts	12.00 Metres	Galvanised Steel	
Y	11	STREET LIGHTING	BELVOIR ROAD	CLEETHORPES	530105.28	406830.32	1988		44010	1 Urbis LED	Teceo 48 LED 500mA	79 Watts	10.00 Metres	Galvanised Steel	
Y	12	STREET LIGHTING	BELVOIR ROAD	CLEETHORPES	530080.85	406803.93	1988		44011	Urbis	AXIA 3.2 32 LED 630 mA	62 Watts	10.00 Metres	Galvanised Steel	
Y	13	STREET LIGHTING	BELVOIR ROAD	CLEETHORPES	530075.67	406771.08	1988		44012	1 Urbis LED	Teceo 48 LED 500mA	79 Watts	10.00 Metres	Galvanised Steel	
Y	14	STREET LIGHTING	BELVOIR ROAD	CLEETHORPES	530051.65	406746.46	1988		44013	1 Urbis LED	Teceo 48 LED 500mA	79 Watts	10.00 Metres	Galvanised Steel	
Y	15	STREET LIGHTING	BELVOIR ROAD	CLEETHORPES	530046.71	406713.93	1988		44014	1 Urbis LED	Teceo 48 LED 500mA	79 Watts	10.00 Metres	Galvanised Steel	
Y	16	STREET LIGHTING	BELVOIR ROAD	CLEETHORPES	530030.39	406686.97	1988		44015	1 Urbis LED	Teceo 48 LED 500mA	79 Watts	10.00 Metres	Galvanised Steel	
Y	17	STREET LIGHTING	BELVOIR ROAD	CLEETHORPES	530003.42	406662.35	1988		44016	1 Urbis LED	Teceo 48 LED 500mA	79 Watts	10.00 Metres	Galvanised Steel	
Y	18	STREET LIGHTING	BELVOIR ROAD	CLEETHORPES	529972.03	406647.54	1988		44017	1 Urbis LED	Teceo 48 LED 500mA	79 Watts	10.00 Metres	Galvanised Steel	
Y	19	STREET LIGHTING	BELVOIR ROAD	CLEETHORPES	529952.79	406616.47	1988		44018	1 Urbis LED	Teceo 48 LED 500mA	79 Watts	10.00 Metres	Galvanised Steel	
Y	20	STREET LIGHTING	BELVOIR ROAD	CLEETHORPES	529921.53	406601.85	1988		44019	Urbis	AXIA 3.2 32 LED 630 mA	62 Watts	10.00 Metres	Galvanised Steel	
Y	21	STREET LIGHTING	BELVOIR ROAD	CLEETHORPES	529905.33	406574.69	2000		44020	1 Urbis LED	Teceo 48 LED 500mA	79 Watts	10.00 Metres	Galvanised Steel	
Y	22	STREET LIGHTING	BELVOIR ROAD	CLEETHORPES	529868.11	406580.33	1988		44021	1 Urbis LED	Teceo 48 LED 500mA	79 Watts	10.00 Metres	Galvanised Steel	
Y	23	STREET LIGHTING	BELVOIR ROAD	CLEETHORPES	529841.41	406608.94	1988		44022	1 Urbis LED	Teceo 48 LED 500mA	79 Watts	10.00 Metres	Galvanised Steel	
Y	24	STREET LIGHTING	BELVOIR ROAD	CLEETHORPES	529809	406628.75	1995		44023	1 Urbis LED	Teceo 48 LED 500mA	79 Watts	10.00 Metres	Galvanised Steel	
Y	25	STREET LIGHTING	BELVOIR ROAD	CLEETHORPES	529770.65	406650.58	1995		44024	1 Urbis LED	Teceo 48 LED 500mA	79 Watts	10.00 Metres	Galvanised Steel	
Y	26	STREET LIGHTING	BELVOIR ROAD	CLEETHORPES	529739.26	406638.62	1995		44025	1 Urbis LED	Teceo 48 LED 500mA	79 Watts	10.00 Metres	Galvanised Steel	
Y	27	STREET LIGHTING	BELVOIR ROAD	CLEETHORPES	529705.72	406615.65	1995		44026	1 Urbis LED	Teceo 48 LED 500mA	79 Watts	10.00 Metres	Galvanised Steel	
Y	1	STREET LIGHTING	BLENHEIM PLACE	CLEETHORPES	530304.68	407837.4	1975		44226	1 Urbis LED	Axia 16 LED 500mA	28 Watts	5.00 Metres	Galvanised Steel	
Y	2	STREET LIGHTING	BLENHEIM PLACE	CLEETHORPES	530307.21	407867.59	1975		44227	Urbis	Axia 16 LED 350mA	19 Watts	5.00 Metres	Galvanised Steel	
Y	3	STREET LIGHTING	BLENHEIM PLACE	CLEETHORPES	530290.63	407887.02	1975		44228	Urbis	Axia 16 LED 350mA	19 Watts	5.00 Metres	Galvanised Steel	
Y	1	STREET LIGHTING	BRAEMAR ROAD	CLEETHORPES	530350.75	407810	1997		44541	1 Urbis LED	Axia 16 LED 500mA	28 Watts	6.00 Metres	Galvanised Steel	
Y	2	STREET LIGHTING	BRAEMAR ROAD	CLEETHORPES	530372.78	407774.18	1997		44542	1 Urbis LED	Axia 16 LED 500mA	28 Watts	6.00 Metres	Galvanised Steel	
Y	3	STREET LIGHTING	BRAEMAR ROAD	CLEETHORPES	530390.5	407744.31	1997		44543	1 Urbis LED	Axia 16 LED 500mA	28 Watts	6.00 Metres	Galvanised Steel	
Y	4	STREET LIGHTING	BRAEMAR ROAD	CLEETHORPES	530379.87	407717.86	1997		44544	1 Urbis LED	Axia 16 LED 500mA	28 Watts	6.00 Metres	Galvanised Steel	
Y	5	STREET LIGHTING	BRAEMAR ROAD	CLEETHORPES	530356.45	407694.38	1997		44545	1 Urbis LED	Axia 16 LED 500mA	28 Watts	6.00 Metres	Galvanised Steel	
Y	6	STREET LIGHTING	BRAEMAR ROAD	CLEETHORPES	530320.38	407669.95	1997		44546	1 Urbis LED	Axia 16 LED 500mA	28 Watts	6.00 Metres	Galvanised Steel	
Y	7	STREET LIGHTING	BRAEMAR ROAD	CLEETHORPES	530298.48	407635.84	1997		44547	1 Urbis LED	Axia 16 LED 500mA	28 Watts	6.00 Metres	Galvanised Steel	
Y	8	STREET LIGHTING	BRAEMAR ROAD	CLEETHORPES	530263.93	407612.93	1997		44548	1 Urbis LED	Axia 16 LED 500mA	28 Watts	6.00 Metres	Galvanised Steel	
Y	9	STREET LIGHTING	BRAEMAR ROAD	CLEETHORPES	530242.41	407579.57	1997		44549	1 Urbis LED	Axia 16 LED 500mA	28 Watts	6.00 Metres	Galvanised Steel	
Y	10	STREET LIGHTING	BRAEMAR ROAD	CLEETHORPES	530205.88	407555.15	1997		44550	1 Urbis LED	Axia 16 LED 500mA	28 Watts	6.00 Metres	Galvanised Steel	
Y	1	STREET LIGHTING	BRAMPTON WAY	CLEETHORPES	529923.38	407175.86	1997		44565	1 Urbis LED	Axia 16 LED 500mA	28 Watts	6.00 Metres	Galvanised Steel	
Y	2	STREET LIGHTING	BRAMPTON WAY	CLEETHORPES	529950.97	407186.81	1997		44566	1 Urbis LED	Axia 16 LED 500mA	28 Watts	6.00 Metres	Galvanised Steel	
Y	3	STREET LIGHTING	BRAMPTON WAY	CLEETHORPES	529985.15	407212.58	1997		44567	1 Urbis LED	Axia 16 LED 500mA	28 Watts	6.00 Metres	Galvanised Steel	
Y	4	STREET LIGHTING	BRAMPTON WAY	CLEETHORPES	530012.74	407241.5	1997		44568	1 Urbis LED	Axia 16 LED 500mA	28 Watts	6.00 Metres	Galvanised Steel	
Y	5	STREET LIGHTING	BRAMPTON WAY	CLEETHORPES	530035.9	407266.06	1997		44569	1 Urbis LED	Axia 16 LED 500mA	28 Watts	6.00 Metres	Galvanised Steel	
Y	6	STREET LIGHTING	BRAMPTON WAY	CLEETHORPES	530070.84	407288.78	2009		44570	1 Urbis LED	Axia 16 LED 500mA	28 Watts	6.00 Metres	Steel	
Y	1	STREET LIGHTING	CEDAR CLOSE	CLEETHORPES	529778.02	406701.62	1966		45518	1 Urbis LED	Axia 16 LED 500mA	28 Watts	5.00 Metres	Galvanised Steel	
Y	2	STREET LIGHTING	CEDAR CLOSE	CLEETHORPES	529796.5	406699.71	1966		45519	1 Urbis LED	Axia 16 LED 500mA	28 Watts	5.00 Metres	Galvanised Steel	
Y	3	STREET LIGHTING	CEDAR CLOSE	CLEETHORPES	529809.03	406680.03	1966		45520	1 Urbis LED	Axia 16 LED 500mA	28 Watts	5.00 Metres	Galvanised Steel	
Y	1	STREET LIGHTING	CHERRY DALE	CLEETHORPES	529679.73	407230.36	2014	15/11/2014	45800	1 Urbis LED	Axia 16 LED 500mA	28 Watts	6.00 Metres	Galvanised Steel	
Y	2	STREET LIGHTING	CHERRY DALE	CLEETHORPES	529648.85	407234.28	2014	15/11/2014	45801	1 Urbis LED	Axia 16 LED 500mA	28 Watts	6.00 Metres	Galvanised Steel	
Y	3	STREET LIGHTING	CHERRY DALE	CLEETHORPES	529627.46	407210.61	2014	15/11/2014	45802	1 Urbis LED	Axia 16 LED 500mA	28 Watts	6.00 Metres	Galvanised Steel	
Y	4	STREET LIGHTING	CHERRY DALE	CLEETHORPES	529613.73	407229.11	2014	15/11/2014	45803	1 Urbis LED	Axia 16 LED 500mA	28 Watts	6.00 Metres	Galvanised Steel	
Y	1	STREET LIGHTING	COTTESMORE ROAD	CLEETHORPES	530127.5	406942.74	1997		46799	Urbis	Axia 16 LED 350mA	19 Watts	5.00 Metres	Galvanised Steel	
Y	2	STREET LIGHTING	COTTESMORE ROAD	CLEETHORPES	530155.1	406954.32	1997		46800	Urbis	Axia 16 LED 350mA	19 Watts	5.00 Metres	Galvanised Steel	
Y	3	STREET LIGHTING	COTTESMORE ROAD	CLEETHORPES	530174.21	406979.45	1997		46801	Urbis	Axia 16 LED 350mA	19 Watts	5.00 Metres	Galvanised Steel	
Y	4	STREET LIGHTING	COTTESMORE ROAD	CLEETHORPES	530196.16	407009.73	2023	20/03/2023	69217	Urbis	Axia 16 LED 350mA	19 Watts	6.00 Metres	Galvanised Steel	
Y	5	STREET LIGHTING	COTTESMORE ROAD	CLEETHORPES	530211.5	407029.85	1997		46803	Urbis	Axia 16 LED 350mA	19 Watts	5.00 Metres	Galvanised Steel	
Y	6	STREET LIGHTING	COTTESMORE ROAD	CLEETHORPES	530220.81	407052.24	2011		46804	Urbis	Axia 16 LED 350mA	19 Watts	6.00 Metres	Steel	
Y	7	STREET LIGHTING	COTTESMORE ROAD	CLEETHORPES	530240.32	407050.65	2011		46805	Urbis	Axia 16 LED 350mA	19 Watts	6.00 Metres	Steel	
Y	8	STREET LIGHTING	COTTESMORE ROAD	CLEETHORPES	530254.53	407075.63	2011		46806	Urbis	Axia 16 LED 350mA	19 Watts	6.00 Metres	Steel	
Y	9	STREET LIGHTING	COTTESMORE ROAD	CLEETHORPES	530269.89	407087.28	2011		46807	Urbis	Axia 16 LED 350mA	19 Watts	6.00 Metres	Steel	
Y	1	STREET LIGHTING	CRAITHIE ROAD	CLEETHORPES	530321.26	407688.04	1988		46851	Urbis	Axia 16 LED 350mA	19 Watts	5.00 Metres	Galvanised Steel	
Y	2	STREET LIGHTING	CRAITHIE ROAD	CLEETHORPES	530308.98	407718.48	1988		46852	Urbis	Axia 16 LED 350mA	19 Watts	5.00 Metres	Galvanised Steel	
Y	3	STREET LIGHTING	CRAITHIE ROAD	CLEETHORPES	530284.05	407740.19	1988		46853	Urbis	Axia 16 LED 350mA	19 Watts	5.00 Metres	Galvanised Steel	
Y	4	STREET LIGHTING	CRAITHIE ROAD	CLEETHORPES	530270.12	407764.81	1988		46854	Urbis	Axia 16 LED 350mA	19 Watts	5.00 Metres	Galvanised Steel	
Y	5	STREET LIGHTING	CRAITHIE ROAD	CLEETHORPES	530272.53	407799.75	1988		46855	Urbis	Axia 16 LED 350mA	19 Watts	5.00 Metres	Galvanised Steel	
Y	1	STREET LIGHTING	ELDERBERRY WAY	CLEETHORPES	529864.22	406987.12	1973		47888	Urbis	Axia 16 LED 350mA	19 Watts	5.00 Metres	Galvanised Steel	
Y	2	STREET LIGHTING	ELDERBERRY WAY	CLEETHORPES	529868.27	407014.15	1973		47889	Urbis	Axia 16 LED 350mA	19 Watts	5.00 Metres	Galvanised Steel	
Y	3	STREET LIGHTING	ELDERBERRY WAY	CLEETHORPES	529882.57	407028.96	1973		47890	Urbis	Axia 16 LED 350mA	19 Watts	5.00 Metres	Galvanised Steel	
Y	1	STREET LIGHTING	ELWYN PLACE	CLEETHORPES	529616.21	406971.88	2014	15/11/2014	48004	Urbis	Axia 16 LED 350mA	19 Watts	6.00 Metres	Galvanised Steel	
Y	2	STREET LIGHTING	ELWYN PLACE	CLEETHORPES	529606.34	406945.62	2014	15/11/2014	48005	Urbis	Axia 16 LED 350mA	19 Watts	6.00 Metres	Galvanised Steel	
Y	3	STREET LIGHTING	ELWYN PLACE	CLEETHORPES	529611.02	406920.75	2014	15/11/2014	48006	Urbis	Axia 16 LED 350mA	19 Watts	6.00 Metres	Galvanised Steel	
Y	4	STREET LIGHTING	ELWYN PLACE	CLEETHORPES	529635.58	406902.33	2014	15/11/2014	48007	Urbis	Axia 16 LED 350mA	19 Watts	6.00 Metres	Galvanised Steel	
Y	5	STREET LIGHTING	ELWYN PLACE	CLEETHORPES	529646.97	406874.23	1993		48008	Urbis	Axia 16 LED 350mA	19 Watts	6.00 Metres	Steel	
Y	1	STREET LIGHTING	FITZWILLIAM MEWS	CLEETHORPES	530089.08	406854.68	2006		48636	1 Urbis LED	Axia 16 LED 500mA	28 Watts	5.00 Metres	Galvanised Steel	
Y	2	STREET LIGHTING	FITZWILLIAM MEWS	CLEETHORPES	530056.8	406871.46	1971		48637	1 Urbis LED	Axia 16 LED 500mA	28 Watts	5.00 Metres	Galvanised Steel	
Y	3	STREET LIGHTING	FITZWILLIAM MEWS	CLEETHORPES	530067.82	406893.93	1971		48638	1 Urbis LED	Axia 16 LED 500mA	28 Watts	5.00 Metres	Galvanised Steel	
Y	1	STREET LIGHTING	GRAINSBY AVENUE	CLEETHORPES	529821.85	407536.23	2014		49406	1 Urbis LED	Axia 16 LED 500mA	28 Watts	6.00 Metres	Galvanised Steel	
Y	2	STREET LIGHTING	GRAINSBY AVENUE	CLEETHORPES	529825.9	407510.6	2014	15/11/2014	49407	1 Urbis LED	Axia 16 LED 500mA	28 Watts	6.00 Metres	Galvanised Steel	
Y	3	STREET LIGHTING	GRAINSBY AVENUE	CLEETHORPES	529845.14	407486.99	2012	04/07/2012	49408	1 Urbis LED	Axia 16 LED 500mA	28 Watts	6.00 Metres	Galvanised Steel	
Y	4	STREET LIGHTING	GRAINSBY AVENUE	CLEETHORPES	529856.14	407462.73	2014	15/11/2014	49409	1 Urbis LED	Axia 16 LED 500mA	28 Watts	6.00 Metres	Galvanised Steel	
Y	5	STREET LIGHTING	GRAINSBY AVENUE	CLEETHORPES	529859.64	407431.27	2014	15/11/2014	49410	1 Urbis LED	Axia 16 LED 500mA	28 Watts	6.00 Metres	Galvanised Steel	
Y	6	STREET LIGHTING	GRAINSBY AVENUE	CLEETHORPES	529849.18	407413.05	2014	15/11/2014	49411	1 Urbis LED	Axia 16 LED 500mA	28 Watts	6.00 Metres	Galvanised Steel	
Y	7	STREET LIGHTING	GRAINSBY AVENUE	CLEETHORPES	529851.21	407395.27	2014	15/11/2014	49412	1 Urbis LED	Axia 16 LED 500mA	28 Watts	6.00 Metres	Galvanised Steel	
Y	8	STREET LIGHTING	GRAINSBY AVENUE	CLEETHORPES	529837.54	407369.89	2014	15/11/2014	49413	1 Urbis LED	Axia 16 LED 500mA	28 Watts	6.00 Metres	Galvanised Steel	
Y	9	STREET LIGHTING	GRAINSBY AVENUE	CLEETHORPES	529823.61	407351.98	2014	15/11/2014	49414	1 Urbis LED	Axia 16 LED 500mA	28 Watts	6.00 Metres	Galvanised Steel	
Y	10	STREET LIGHTING	GRAINSBY AVENUE	CLEETHORPES	529800.32	407328.37	2013		49415	1 Urbis LED	Axia 16 LED 500mA	28 Watts	6.00 Metres	Galvanised Steel	
Y	11	STREET LIGHTING	GRAINSBY AVENUE	CLEETHORPES	529780.58	407318.06	2014		49416	1 Urbis LED	Axia 16 LED 500mA	28 Watts	6.00 Metres	Galvanised Steel	
Y	12	STREET LIGHTING	GRAINSBY AVENUE	CLEETHORPES	529760.07	407302.3	2001		49417	1 Urbis LED	Axia 16 LED 500mA	28 Watts	6.00 Metres	Galvanised Steel	
Y	1	STREET LIGHTING	GREEN HILL	CLEETHORPES	529609.24	407135.54	2014	15/11/2014	49699	Urbis	Axia 16 LED 350mA	19 Watts	6.00 Metres	Galvanised Steel	
Y	2	STREET LIGHTING	GREEN HILL	CLEETHORPES	529588.05	407157.36	2002		49700	Urbis	Axia 16 LED 350mA	19 Watts	6.00 Metres	Stainless Steel	
Y	3	STREET LIGHTING	GREEN HILL	CLEETHORPES	529585.08	407191.92	2002		49701	Urbis	Axia 16 LED 350mA	19 Watts	6.00 Metres	Stainless Steel	
Y	4	STREET LIGHTING	GREEN HILL	CLEETHORPES	529568.55	407212.52	2014	15/11/2014	49702	Urbis	Axia 16 LED 350mA	19 Watts	6.00 Metres	Galvanised Steel	
Y	5	STREET LIGHTING	GREEN HILL	CLEETHORPES	529571.77	407232.25	2014	15/11/2014	49703	Urbis	Axia 16 LED 350mA	19 Watts	6.00 Metres	Galvanised Steel	
Y	1	STREET LIGHTING	GUNBY PLACE	CLEETHORPES	530158.97	407703.65	2014	15/11/2014	49969	Urbis	Axia 16 LED 350mA	19 Watts	6.00 Metres	Galvanised Steel	
Y	2	STREET LIGHTING	GUNBY PLACE	CLEETHORPES	530185.8	407718.72	2014	15/11/2014	49970	Urbis	Axia 16 LED 350mA	19 Watts	6.00 Metres	Galvanised Steel	
Y	3	STREET LIGHTING	GUNBY PLACE	CLEETHORPES	530204.15	407739.03	2014	15/11/2014	49971	Urbis	Axia 16 LED 350mA	19 Watts	6.00 Metres	Galvanised Steel	
Y	1	STREET LIGHTING	HAVERSTOE PLACE	CLEETHORPES	529437.98	407210.86	2014	15/11/2014	50332	Urbis	Axia 16 LED 350mA	19 Watts	6.00 Metres	Galvanised Steel	
Y	2	STREET LIGHTING	HAVERSTOE PLACE	CLEETHORPES	529425.45	407245.61	2014	15/11/2014	50333	Urbis	Axia 16 LED 350mA	19 Watts	6.00 Metres	Galvanised Steel	
Y	3	STREET LIGHTING	HAVERSTOE PLACE	CLEETHORPES	529431.65	407272	2014	15/11/2014	50334	Urbis	Axia 16 LED 350mA	19 Watts	6.00 Metres	Galvanised Steel	
Y	4	STREET LIGHTING	HAVERSTOE PLACE	CLEETHORPES	529441.23	407295.67	2003		50335	Urbis	Axia 16 LED 350mA	19 Watts	5.00 Metres	Stainless Steel	
Y	1	STREET LIGHTING	HEWITTS MANOR	CLEETHORPES	529619.73	406827.99	1988		50647	Urbis	Axia 16 LED 350mA	19 Watts	5.00 Metres	Galvanised Steel	
Y	2	STREET LIGHTING	HEWITTS MANOR	CLEETHORPES	529596.92	406854.5	1988		50648	Urbis	Axia 16 LED 350mA	19 Watts	5.00 Metres	Galvanised Steel	
Y	3	STREET LIGHTING	HEWITTS MANOR	CLEETHORPES	529570.72	406858.74	1988		50649	Urbis	Axia 16 LED 350mA	19 Watts	5.00 Metres	Galvanised Steel	

Y	4	STREET LIGHTING	HEWITTS MANOR	CLEETHORPES	529550.09	406842.47	1988		50650	Urbis	Axia 16 LED 350mA	19 Watts	5.00 Metres	Galvanised Steel	
Y	1	STREET LIGHTING	HIGHTHORPE CRESCENT	CLEETHORPES	529535.81	407291.11	2018	26/10/2018	67193	Urbis	Teceo 32 LED 500mA	52 Watts	6.00 Metres	Galvanised Steel	
Y	2	STREET LIGHTING	HIGHTHORPE CRESCENT	CLEETHORPES	529506.69	407267.38	2018	26/10/2018	67304	Urbis	Teceo 32 LED 500mA	52 Watts	6.00 Metres	Galvanised Steel	
Y	3	STREET LIGHTING	HIGHTHORPE CRESCENT	CLEETHORPES	529503.05	407227.19	2018	26/10/2018	67305	Urbis	Teceo 32 LED 500mA	52 Watts	6.00 Metres	Galvanised Steel	
Y	4	STREET LIGHTING	HIGHTHORPE CRESCENT	CLEETHORPES	529497.98	407191.75	2018	26/10/2018	67306	Urbis	Teceo 32 LED 500mA	52 Watts	6.00 Metres	Galvanised Steel	
Y	5	STREET LIGHTING	HIGHTHORPE CRESCENT	CLEETHORPES	529517.92	407162.79	2018	26/10/2018	67307	Urbis	Teceo 32 LED 500mA	52 Watts	6.00 Metres	Galvanised Steel	
Y	6	STREET LIGHTING	HIGHTHORPE CRESCENT	CLEETHORPES	529523.77	407127.98	2018	26/10/2018	67308	Urbis	AXIA 3.2 24 LED 540mA	41 Watts	6.00 Metres	Galvanised Steel	
Y	7	STREET LIGHTING	HIGHTHORPE CRESCENT	CLEETHORPES	529557.32	407093.01	2018	26/10/2018	67309	Urbis	Teceo 32 LED 500mA	52 Watts	6.00 Metres	Galvanised Steel	
Y	8	STREET LIGHTING	HIGHTHORPE CRESCENT	CLEETHORPES	529562.71	407074.18	2018	26/10/2018	67310	Urbis	Teceo 32 LED 500mA	52 Watts	6.00 Metres	Galvanised Steel	
Y	9	STREET LIGHTING	HIGHTHORPE CRESCENT	CLEETHORPES	529595.93	407052.19	2018	26/10/2018	67311	Urbis	AXIA 3.2 24 LED 540mA	41 Watts	6.00 Metres	Galvanised Steel	
Y	10	STREET LIGHTING	HIGHTHORPE CRESCENT	CLEETHORPES	529637.71	407047.76	2018	26/10/2018	67312	Urbis	Teceo 32 LED 500mA	52 Watts	6.00 Metres	Galvanised Steel	
Y	11	STREET LIGHTING	HIGHTHORPE CRESCENT	CLEETHORPES	529672.67	407058.68	2018	26/10/2018	67313	Urbis	Teceo 32 LED 500mA	52 Watts	6.00 Metres	Galvanised Steel	
Y	12	STREET LIGHTING	HIGHTHORPE CRESCENT	CLEETHORPES	529701.15	407080.51	2018	26/10/2018	67314	Urbis	Teceo 32 LED 500mA	52 Watts	6.00 Metres	Galvanised Steel	
Y	13	STREET LIGHTING	HIGHTHORPE CRESCENT	CLEETHORPES	529708.74	407099.34	2018	26/10/2018	67315	Urbis	AXIA 3.2 24 LED 540mA	41 Watts	6.00 Metres	Galvanised Steel	
Y	14	STREET LIGHTING	HIGHTHORPE CRESCENT	CLEETHORPES	529734.85	407116.59	2018	26/10/2018	67316	Urbis	AXIA 3.2 24 LED 540mA	41 Watts	6.00 Metres	Galvanised Steel	
Y	15	STREET LIGHTING	HIGHTHORPE CRESCENT	CLEETHORPES	529741.97	407146.81	2018	26/10/2018	67317	Urbis	Teceo 32 LED 500mA	52 Watts	6.00 Metres	Galvanised Steel	
Y	16	STREET LIGHTING	HIGHTHORPE CRESCENT	CLEETHORPES	529765.55	407169.44	2018	26/10/2018	67318	Urbis	Teceo 32 LED 500mA	52 Watts	6.00 Metres	Galvanised Steel	
Y	17	STREET LIGHTING	HIGHTHORPE CRESCENT	CLEETHORPES	529777.26	407190.96	2018	26/10/2018	67319	Urbis	Teceo 32 LED 500mA	52 Watts	6.00 Metres	Galvanised Steel	
Y	18	STREET LIGHTING	HIGHTHORPE CRESCENT	CLEETHORPES	529782.48	407219.44	2018	26/10/2018	67320	Urbis	AXIA 3.2 24 LED 540mA	41 Watts	6.00 Metres	Galvanised Steel	
Y	19	STREET LIGHTING	HIGHTHORPE CRESCENT	CLEETHORPES	529807.48	407239.06	2018	26/10/2018	67321	Urbis	Teceo 32 LED 500mA	52 Watts	6.00 Metres	Galvanised Steel	
Y	1	STREET LIGHTING	HOLLINGSWORTH CLOSE	CLEETHORPES	529929.29	406636.62	1973		50942	1 Urbis LED	Axia 16 LED 500mA	28 Watts	5.00 Metres	Galvanised Steel	
Y	2	STREET LIGHTING	HOLLINGSWORTH CLOSE	CLEETHORPES	529916.63	406666.24	1973		50943	1 Urbis LED	Axia 16 LED 500mA	28 Watts	5.00 Metres	Galvanised Steel	
Y	3	STREET LIGHTING	HOLLINGSWORTH CLOSE	CLEETHORPES	529890.3	406678.7	1973		50944	1 Urbis LED	Axia 16 LED 500mA	28 Watts	5.00 Metres	Galvanised Steel	
Y	4	STREET LIGHTING	HOLLINGSWORTH CLOSE	CLEETHORPES	529873.85	406697.88	1973		50945	1 Urbis LED	Axia 16 LED 500mA	28 Watts	5.00 Metres	Galvanised Steel	
Y	5	STREET LIGHTING	HOLLINGSWORTH CLOSE	CLEETHORPES	529905.11	406710.29	1973		50946	1 Urbis LED	Axia 16 LED 500mA	28 Watts	5.00 Metres	Galvanised Steel	
Y	1	STREET LIGHTING	INGRAM PLACE	CLEETHORPES	529750.7	407046.05	2006		51293	1 Urbis LED	Axia 16 LED 500mA	28 Watts	6.00 Metres	Stainless Steel	
Y	2	STREET LIGHTING	INGRAM PLACE	CLEETHORPES	529776.21	407030.49	2014	15/11/2014	51294	1 Urbis LED	Axia 16 LED 500mA	28 Watts	6.00 Metres	Galvanised Steel	
Y	3	STREET LIGHTING	INGRAM PLACE	CLEETHORPES	529784.06	406998.4	1966		51295	1 Urbis LED	Axia 16 LED 500mA	28 Watts	5.00 Metres	Galvanised Steel	
Y	4	STREET LIGHTING	INGRAM PLACE	CLEETHORPES	529759.12	406964.48	2014	15/11/2014	51296	1 Urbis LED	Axia 16 LED 500mA	28 Watts	6.00 Metres	Galvanised Steel	
Y	5	STREET LIGHTING	INGRAM PLACE	CLEETHORPES	529730.39	406946.95	2014	15/11/2014	51297	1 Urbis LED	Axia 16 LED 500mA	28 Watts	6.00 Metres	Galvanised Steel	
Y	6	STREET LIGHTING	INGRAM PLACE	CLEETHORPES	529715.96	406919.55	1966		51298	1 Urbis LED	Axia 16 LED 500mA	28 Watts	5.00 Metres	Galvanised Steel	
Y	1	STREET LIGHTING	IRBY COURT	CLEETHORPES	529647.42	407385.91	2014	15/11/2014	51361	1 Urbis LED	Axia 16 LED 500mA	28 Watts	6.00 Metres	Galvanised Steel	
Y	2	STREET LIGHTING	IRBY COURT	CLEETHORPES	529604	407374.33	2014	15/11/2014	51362	1 Urbis LED	Axia 16 LED 500mA	28 Watts	6.00 Metres	Galvanised Steel	
Y	3	STREET LIGHTING	IRBY COURT	CLEETHORPES	529577.29	407361.86	1995		51363	1 Urbis LED	Axia 16 LED 500mA	28 Watts	6.00 Metres	Galvanised Steel	
Y	1	STREET LIGHTING	ITTERBY CRESCENT	CLEETHORPES	529480.13	407217.63	1998		51375	Urbis	Axia 16 LED 350mA	19 Watts	6.00 Metres	Galvanised Steel	
Y	2	STREET LIGHTING	ITTERBY CRESCENT	CLEETHORPES	529455.57	407205.79	1998		51376	Urbis	Axia 16 LED 350mA	19 Watts	6.00 Metres	Galvanised Steel	
Y	3	STREET LIGHTING	ITTERBY CRESCENT	CLEETHORPES	529436.46	407182.81	1998		51377	Urbis	Axia 16 LED 350mA	19 Watts	6.00 Metres	Galvanised Steel	
Y	4	STREET LIGHTING	ITTERBY CRESCENT	CLEETHORPES	529439.12	407154.02	1998		51378	Urbis	Axia 16 LED 350mA	19 Watts	6.00 Metres	Galvanised Steel	
Y	5	STREET LIGHTING	ITTERBY CRESCENT	CLEETHORPES	529458.36	407122.25	1998		51379	Urbis	Axia 16 LED 350mA	19 Watts	6.00 Metres	Galvanised Steel	
Y	6	STREET LIGHTING	ITTERBY CRESCENT	CLEETHORPES	529458.61	407092.63	1998		51380	Urbis	Axia 16 LED 350mA	19 Watts	6.00 Metres	Galvanised Steel	
Y	7	STREET LIGHTING	ITTERBY CRESCENT	CLEETHORPES	529476.08	407059.53	1998		51381	Urbis	Axia 16 LED 350mA	19 Watts	6.00 Metres	Galvanised Steel	
Y	8	STREET LIGHTING	ITTERBY CRESCENT	CLEETHORPES	529495.83	407028.52	1998		51382	Urbis	Axia 16 LED 350mA	19 Watts	6.00 Metres	Galvanised Steel	
Y	9	STREET LIGHTING	ITTERBY CRESCENT	CLEETHORPES	529522.92	407006.05	1998		51383	Urbis	Axia 16 LED 350mA	19 Watts	6.00 Metres	Galvanised Steel	
Y	10	STREET LIGHTING	ITTERBY CRESCENT	CLEETHORPES	529560.64	407000.29	1998		51384	Urbis	Axia 16 LED 350mA	19 Watts	6.00 Metres	Galvanised Steel	
Y	11	STREET LIGHTING	ITTERBY CRESCENT	CLEETHORPES	529585.71	406981.64	1998		51385	Urbis	Axia 16 LED 350mA	19 Watts	6.00 Metres	Galvanised Steel	
Y	12	STREET LIGHTING	ITTERBY CRESCENT	CLEETHORPES	529613.43	406988.16	1998		51386	Urbis	Axia 16 LED 350mA	19 Watts	6.00 Metres	Galvanised Steel	
Y	13	STREET LIGHTING	ITTERBY CRESCENT	CLEETHORPES	529644.69	406979.24	1998		51387	Urbis	Axia 16 LED 350mA	19 Watts	6.00 Metres	Galvanised Steel	
Y	14	STREET LIGHTING	ITTERBY CRESCENT	CLEETHORPES	529672.66	406986.77	1998		51388	Urbis	Axia 16 LED 350mA	19 Watts	6.00 Metres	Galvanised Steel	
Y	15	STREET LIGHTING	ITTERBY CRESCENT	CLEETHORPES	529705.57	407002.02	1998		51389	Urbis	Axia 16 LED 350mA	19 Watts	6.00 Metres	Galvanised Steel	
Y	16	STREET LIGHTING	ITTERBY CRESCENT	CLEETHORPES	529734.18	407023.22	1998		51390	Urbis	Axia 16 LED 350mA	19 Watts	6.00 Metres	Galvanised Steel	
Y	17	STREET LIGHTING	ITTERBY CRESCENT	CLEETHORPES	529744.81	407051.64	1998		51391	Urbis	Axia 16 LED 350mA	19 Watts	6.00 Metres	Galvanised Steel	
Y	18	STREET LIGHTING	ITTERBY CRESCENT	CLEETHORPES	529724.94	407083.79	1998		51392	Urbis	Axia 16 LED 350mA	19 Watts	6.00 Metres	Galvanised Steel	
Y	1	STREET LIGHTING	LANSDOWN LINK	CLEETHORPES	530066.41	407309.86	1997		52288	1 Urbis LED	Axia 16 LED 500mA	28 Watts	6.00 Metres	Galvanised Steel	
Y	2	STREET LIGHTING	LANSDOWN LINK	CLEETHORPES	530030.84	407332.27	1997		52289	1 Urbis LED	Axia 16 LED 500mA	28 Watts	6.00 Metres	Galvanised Steel	
Y	1	STREET LIGHTING	LARCH ROAD	CLEETHORPES	529879.15	406951.68	1987		52341	1 Urbis LED	Axia 16 LED 500mA	28 Watts	5.00 Metres	Galvanised Steel	
Y	2	STREET LIGHTING	LARCH ROAD	CLEETHORPES	529880.17	406932	1987		52342	1 Urbis LED	Axia 16 LED 500mA	28 Watts	5.00 Metres	Galvanised Steel	
Y	3	STREET LIGHTING	LARCH ROAD	CLEETHORPES	529888.78	406897.7	1987		52343	1 Urbis LED	Axia 16 LED 500mA	28 Watts	5.00 Metres	Galvanised Steel	
Y	4	STREET LIGHTING	LARCH ROAD	CLEETHORPES	529912.7	406875.61	1987		52344	1 Urbis LED	Axia 16 LED 500mA	28 Watts	5.00 Metres	Galvanised Steel	
Y	5	STREET LIGHTING	LARCH ROAD	CLEETHORPES	529943.08	406891.75	1987		52345	1 Urbis LED	Axia 16 LED 500mA	28 Watts	5.00 Metres	Galvanised Steel	
Y	6	STREET LIGHTING	LARCH ROAD	CLEETHORPES	529967.94	406912.81	2022	10/01/2022	68804	Urbis	Axia 24 LED 500mA	28 Watts	6.00 Metres	Galvanised Steel	
Y	1	STREET LIGHTING	MILL GARTH	CLEETHORPES	529575.55	407092.19	2005		53614	Urbis	Axia 16 LED 350mA	19 Watts	6.00 Metres	Galvanised Steel	
Y	2	STREET LIGHTING	MILL GARTH	CLEETHORPES	529594.07	407107.2	2014	15/11/2014	53615	Urbis	Axia 16 LED 350mA	19 Watts	6.00 Metres	Galvanised Steel	
Y	3	STREET LIGHTING	MILL GARTH	CLEETHORPES	529619.13	407114.35	2014	15/11/2014	53616	Urbis	Axia 16 LED 350mA	19 Watts	6.00 Metres	Galvanised Steel	
Y	4	STREET LIGHTING	MILL GARTH	CLEETHORPES	529639.26	407134.67	2014	15/11/2014	53617	Urbis	Axia 16 LED 350mA	19 Watts	6.00 Metres	Galvanised Steel	
Y	5	STREET LIGHTING	MILL GARTH	CLEETHORPES	529671.79	407151.25	2014	15/11/2014	53618	Urbis	Axia 16 LED 350mA	19 Watts	6.00 Metres	Galvanised Steel	
Y	6	STREET LIGHTING	MILL GARTH	CLEETHORPES	529683.18	407182.51	2014	15/11/2014	53619	Urbis	Axia 16 LED 350mA	19 Watts	6.00 Metres	Galvanised Steel	
Y	7	STREET LIGHTING	MILL GARTH	CLEETHORPES	529702.8	407200.17	2014	15/11/2014	53620	Urbis	Axia 16 LED 350mA	19 Watts	6.00 Metres	Galvanised Steel	
Y	8	STREET LIGHTING	MILL GARTH	CLEETHORPES	529713.27	407224.28	2014	15/11/2014	53621	Urbis	Axia 16 LED 350mA	19 Watts	6.00 Metres	Galvanised Steel	
Y	9	STREET LIGHTING	MILL GARTH	CLEETHORPES	529737.7	407214.6	2014	15/11/2014	53622	Urbis	Axia 16 LED 350mA	19 Watts	6.00 Metres	Galvanised Steel	
Y	10	STREET LIGHTING	MILL GARTH	CLEETHORPES	529766.31	407209.09	2014	15/11/2014	53623	Urbis	Axia 16 LED 350mA	19 Watts	6.00 Metres	Galvanised Steel	
Y	1	STREET LIGHTING	NEWSTEAD ROAD	CLEETHORPES	530081.12	407771.18	1997		54159	1 Urbis LED	Teceo 24 LED 500mA	40 Watts	6.00 Metres	Galvanised Steel	
Y	2	STREET LIGHTING	NEWSTEAD ROAD	CLEETHORPES	530101.37	407734.34	1997		54160	1 Urbis LED	Teceo 24 LED 500mA	40 Watts	6.00 Metres	Galvanised Steel	
Y	3	STREET LIGHTING	NEWSTEAD ROAD	CLEETHORPES	530134.15	407711.94	1997		54161	1 Urbis LED	Teceo 24 LED 500mA	40 Watts	6.00 Metres	Galvanised Steel	
Y	4	STREET LIGHTING	NEWSTEAD ROAD	CLEETHORPES	530163.26	407681.24	1997		54162	1 Urbis LED	Teceo 24 LED 500mA	40 Watts	6.00 Metres	Galvanised Steel	
Y	5	STREET LIGHTING	NEWSTEAD ROAD	CLEETHORPES	530181.24	407646.62	1997		54163	1 Urbis LED	Teceo 24 LED 500mA	40 Watts	6.00 Metres	Galvanised Steel	
Y	1	STREET LIGHTING	ORMSBY CLOSE	CLEETHORPES	529775.77	407347.68	1979		54463	1 Urbis LED	Axia 16 LED 500mA	28 Watts	6.00 Metres	Steel	
Y	2	STREET LIGHTING	ORMSBY CLOSE	CLEETHORPES	529767.67	407373.88	2014	15/11/2014	54464	1 Urbis LED	Axia 16 LED 500mA	28 Watts	6.00 Metres	Galvanised Steel	
Y	1	STREET LIGHTING	PINE COURT	CLEETHORPES	529704.11	406824.61	1985		55495	1 Urbis LED	Axia 16 LED 500mA	28 Watts	5.00 Metres	Galvanised Steel	
Y	1	STREET LIGHTING	PRYSTIE PLACE	CLEETHORPES	529561.14	406980.61	2014	15/11/2014	55693	Urbis	Axia 16 LED 350mA	19 Watts	6.00 Metres	Galvanised Steel	
Y	2	STREET LIGHTING	PRYSTIE PLACE	CLEETHORPES	529545.2	406951.88	2014	15/11/2014	55694	Urbis	Axia 16 LED 350mA	19 Watts	6.00 Metres	Galvanised Steel	
Y	3	STREET LIGHTING	PRYSTIE PLACE	CLEETHORPES	529550.76	406924.92	2014	15/11/2014	55695	Urbis	Axia 16 LED 350mA	19 Watts	6.00 Metres	Galvanised Steel	
Y	4	STREET LIGHTING	PRYSTIE PLACE	CLEETHORPES	529549.75	406905.05	1983		55696	Urbis	Axia 16 LED 350mA	19 Watts	5.00 Metres	Galvanised Steel	
Y	5	STREET LIGHTING	PRYSTIE PLACE	CLEETHORPES	529533.68	406916	2014	15/11/2014	55697	Urbis	Axia 16 LED 350mA	19 Watts	6.00 Metres	Galvanised Steel	
Y	1	STREET LIGHTING	PYTCHLEY WALK	CLEETHORPES	530047.3	406995.95	1983		55722	1 Urbis LED	Axia 16 LED 500mA	28 Watts	5.00 Metres	Galvanised Steel	
Y	2	STREET LIGHTING	PYTCHLEY WALK	CLEETHORPES	530025.03	406988.8	1983		55723	1 Urbis LED	Axia 16 LED 500mA	28 Watts	5.00 Metres	Galvanised Steel	
Y	3	STREET LIGHTING	PYTCHLEY WALK	CLEETHORPES	530005.28	406956.46	1983		55724	1 Urbis LED	Axia 16 LED 500mA	28 Watts	5.00 Metres	Galvanised Steel	
Y	4	STREET LIGHTING	PYTCHLEY WALK	CLEETHORPES	529986.17	406938.16	1983		55725	1 Urbis LED	Axia 16 LED 500mA	28 Watts	5.00 Metres	Galvanised Steel	
Y	1	STREET LIGHTING	RAVENHILL CLOSE	CLEETHORPES	529954.64	407306.45	2014	15/11/2014	55920	Urbis	Axia 16 LED 350mA	19 Watts	6.00 Metres	Galvanised Steel	
Y	2	STREET LIGHTING	RAVENHILL CLOSE	CLEETHORPES	529936.54	407330.31	2014	15/11/2014	55921	Urbis	Axia 16 LED 350mA	19 Watts	6.00 Metres	Galvanised Steel	
Y	3	STREET LIGHTING	RAVENHILL CLOSE	CLEETHORPES	529916.04	407334.36	2014	15/11/2014	55922	Urbis	Axia 16 LED 350mA	19 Watts	6.00 Metres	Galvanised Steel	
Y	4	STREET LIGHTING	RAVENHILL CLOSE	CLEETHORPES	529926.29	407348.4	2014	15/11/2014	55923	Urbis	Axia 16 LED 350mA	19 Watts	6.00 Metres	Galvanised Steel	
Y	1	STREET LIGHTING	REDWOOD DRIVE	CLEETHORPES	529873.25	406900.19	1996		55971	Urbis	Axia 16 LED 350mA	19 Watts	5.00 Metres	Galvanised Steel	
Y	2	STREET LIGHTING	REDWOOD DRIVE	CLEETHORPES	529840.34	406891.14	1996		55972	Urbis	Axia 16 LED 350mA	19 Watts	5.00 Metres	Galvanised Steel	
Y	3	STREET LIGHTING	REDWOOD DRIVE	CLEETHORPES	529841.74	406858.28	1996		55973	Urbis	Axia 16 LED 350mA	19 Watts	5.00 Metres	Galvanised Steel	
Y	4	STREET LIGHTING	REDWOOD DRIVE	CLEETHORPES	529862.24	406836.7	1996		55974	Urbis	Axia 16 LED 350mA	19 Watts	5.00 Metres	Galvanised Steel	
Y	5	STREET LIGHTING	REDWOOD DRIVE	CLEETHORPES	529881.99	406817.84	1996		55975	Urbis	Axia 16 LED 350mA	19 Watts	5.00 Metres	Galvanised Steel	
Y	6	STREET LIGHTING	REDWOOD DRIVE	CLEETHORPES	529893.51	406806.39	1996		55976	Urbis	Axia 16 LED 350mA	19 Watts	5.00 Metres	Galvanised Steel	
Y	7	STREET LIGHTING	REDWOOD DRIVE	CLEETHORPES	529904.27	406818.63	1996		55977	Urbis	Axia 16 LED 350mA	19 Watts	5.00 Metres	Galvanised Steel	
Y	8	STREET LIGHTING	REDWOOD DRIVE	CLEETHORPES	529905.28	406799.7	1996		55978	Urbis	Axia 16 LED 350mA	19 Watts	5.00 Metres	Galvanised Steel	
Y	9	STREET LIGHTING	REDWOOD DRIVE	CLEETHORPES	529923.13	406798.19	1996		55979	Urbis	Axia 16 LED 350mA	19 Watts	5.00 Metres	Galvanised Steel	
Y	1	STREET LIGHTING	RUFFORD ROAD	CLEETHORPES	530228.46	407832.05	1995		56374	Urbis	Axia 16 LED 350mA	19 Watts	6.00 Metres	Galvanised Steel	
Y	2	STREET LIGHTING	RUFFORD ROAD	CLEETHORPES	530201.07	407821.22	1995		56375	Urbis	Axia 16 LED 350mA	19 Watts	6.00 Metres	Galvanised Steel	
Y	3	STREET LIGHTING	RUFFORD ROAD	CLEETHORPES	530181.72	407795.82	1995		56376	Urbis	Axia 16 LED 350mA	19 Watts	6.00 Metres	Galvanised Steel	
Y	4	STREET LIGHTING	RUFFORD ROAD	CLEETHORPES	530154.94	407786.18	1995		56377	Urbis	Axia 16 LED 350mA	19 Watts	6.00 Metres	Galvanised Steel	
Y	5	STREET LIGHTING	RUFFORD ROAD	CLEETHORPES	530139.49	407763.49	1995		56378	Urbis	Axia 16 LED 350mA	19 Watts	6.00 Metres	Galvanised Steel	
Y	6	STREET LIGHTING	RUFFORD ROAD	CLEETHORPES	530108.36	407750.76	1995		56379	Urbis	Axia 16 LED 350mA	19 Watts	6.00 Metres	Galvanised Steel	
Y	1	STREET LIGHTING	SWABY DRIVE	CLEETHORPES	529827.16	407483	2014	15/11/2014	58662	Urbis	Axia 16 LED 350mA	19 Watts	6.00 Metres	Galvanised Steel	
Y	2	STREET LIGHTING	SWABY DRIVE	CLEETHORPES	529802.86	407463.57	2014	15/11/2014	58663	Urbis	Axia 16 LED 350mA	19 Watts	6.00 Metres	Galvanised Steel	
Y	3	STREET LIGHTING	SWABY DRIVE	CLEETHORPES	529772.61	407457.56	2014	15/11/2014	58664	Urbis	Axia 16 LED 350mA	19 Watts	6.00 Metres	Galvanised Steel	
Y	4	STREET LIGHTING	SWABY DRIVE	CLEETHORPES	529752.35	407439.77	2014	15/11/2014	58665	Urbis	Axia 16 LED 350mA	19 Watts	6.00 Metres	Galvanised Steel	

Y	5	STREET LIGHTING	SWABY DRIVE	CLEETHORPES	529718.18	407432.12	2014	15/11/2014	58666	Urbis	Axia 16 LED 350mA	19 Watts	6.00 Metres	Galvanised Steel	
Y	6	STREET LIGHTING	SWABY DRIVE	CLEETHORPES	529696.91	407413.57	2014	15/11/2014	58667	Urbis	Axia 16 LED 350mA	19 Watts	6.00 Metres	Galvanised Steel	
Y	7	STREET LIGHTING	SWABY DRIVE	CLEETHORPES	529678	407414	2001		58668	Urbis	Axia 16 LED 350mA	19 Watts	6.00 Metres	Steel	
Y	8	STREET LIGHTING	SWABY DRIVE	CLEETHORPES	529656.53	407368.13	2014	15/11/2014	58669	Urbis	Axia 16 LED 350mA	19 Watts	6.00 Metres	Galvanised Steel	
Y	9	STREET LIGHTING	SWABY DRIVE	CLEETHORPES	529665.01	407346.29	2014	15/11/2014	58670	Urbis	Axia 16 LED 350mA	19 Watts	6.00 Metres	Galvanised Steel	
Y	10	STREET LIGHTING	SWABY DRIVE	CLEETHORPES	529659.95	407317.62	2022	29/06/2022	68931	Urbis	Axia 16 LED 350mA	19 Watts	6.00 Metres	Galvanised Steel	
Y	1	STREET LIGHTING	THORNTON CRESCENT	CLEETHORPES	530211.49	407882.63	1988		59147	Urbis	Axia 16 LED 350mA	19 Watts	5.00 Metres	Galvanised Steel	
Y	2	STREET LIGHTING	THORNTON CRESCENT	CLEETHORPES	530228.84	407859.78	1988		59148	Urbis	Axia 16 LED 350mA	19 Watts	5.00 Metres	Galvanised Steel	
Y	3	STREET LIGHTING	THORNTON CRESCENT	CLEETHORPES	530239.22	407833.96	1988		59149	Urbis	Axia 16 LED 350mA	19 Watts	5.00 Metres	Galvanised Steel	
Y	4	STREET LIGHTING	THORNTON CRESCENT	CLEETHORPES	530271.11	407821.87	1988		59150	Urbis	Axia 16 LED 350mA	19 Watts	5.00 Metres	Galvanised Steel	
Y	5	STREET LIGHTING	THORNTON CRESCENT	CLEETHORPES	530298.84	407806.11	1988		59151	Urbis	Axia 16 LED 350mA	19 Watts	5.00 Metres	Galvanised Steel	
Y	6	STREET LIGHTING	THORNTON CRESCENT	CLEETHORPES	530325.54	407807.95	1988		59152	Urbis	Axia 16 LED 350mA	19 Watts	5.00 Metres	Galvanised Steel	
Y	7	STREET LIGHTING	THORNTON CRESCENT	CLEETHORPES	530344.28	407824.02	1988		59153	Urbis	Axia 16 LED 350mA	19 Watts	5.00 Metres	Galvanised Steel	
Y	8	STREET LIGHTING	THORNTON CRESCENT	CLEETHORPES	530370.1	407830.42	1988		59154	Urbis	Axia 16 LED 350mA	19 Watts	5.00 Metres	Galvanised Steel	
Y	9	STREET LIGHTING	THORNTON CRESCENT	CLEETHORPES	530388.69	407853.89	2022	04/01/2022	68792	Urbis	Axia 16 LED 350mA	19 Watts	6.00 Metres	Galvanised Steel	
Y	1	STREET LIGHTING	WALNUT CRESCENT	CLEETHORPES	529700.04	406693.76	1989		59739	Urbis	Axia 16 LED 350mA	19 Watts	5.00 Metres	Galvanised Steel	
Y	2	STREET LIGHTING	WALNUT CRESCENT	CLEETHORPES	529673.52	406701.92	1989		66598	Urbis	Axia 16 LED 350mA	19 Watts	5.00 Metres	Galvanised Steel	
Y	3	STREET LIGHTING	WALNUT CRESCENT	CLEETHORPES	529674.34	406720.66	1989		59740	Urbis	Axia 16 LED 350mA	19 Watts	5.00 Metres	Galvanised Steel	
Y	4	STREET LIGHTING	WALNUT CRESCENT	CLEETHORPES	529665.61	406750.53	1989		59741	Urbis	Axia 16 LED 350mA	19 Watts	5.00 Metres	Galvanised Steel	
Y	5	STREET LIGHTING	WALNUT CRESCENT	CLEETHORPES	529675.99	406778.25	1989		59742	Urbis	Axia 16 LED 350mA	19 Watts	5.00 Metres	Galvanised Steel	
Y	6	STREET LIGHTING	WALNUT CRESCENT	CLEETHORPES	529705.25	406798.85	1989		59743	Urbis	Axia 16 LED 350mA	19 Watts	5.00 Metres	Galvanised Steel	
Y	7	STREET LIGHTING	WALNUT CRESCENT	CLEETHORPES	529732.02	406795.73	2012		59744	Urbis	Axia 16 LED 350mA	19 Watts	6.00 Metres	Steel	
Y	1	STREET LIGHTING	ASH COURT	CLEETHORPES	529836.25	406630.47	1980		43394	1 Urbis LED	Teceo 24 LED 500mA	40 Watts	8.00 Metres	Galvanised Steel	
Y	2	STREET LIGHTING	ASH COURT	CLEETHORPES	529825.36	406665.66	1980		43395	1 Urbis LED	Axia 16 LED 500mA	28 Watts	5.00 Metres	Galvanised Steel	
Y	3	STREET LIGHTING	ASH COURT	CLEETHORPES	529852.07	406643.32	1980		43396	1 Urbis LED	Axia 16 LED 500mA	28 Watts	5.00 Metres	Galvanised Steel	
Y	4	STREET LIGHTING	ASH COURT	CLEETHORPES	529884.22	406633.32	1995		43397	1 Urbis LED	Axia 16 LED 500mA	28 Watts	6.00 Metres	Galvanised Steel	
Y	5	STREET LIGHTING	ASH COURT	CLEETHORPES	529889.41	406602.5	1980		43398	1 Urbis LED	Axia 16 LED 500mA	28 Watts	5.00 Metres	Galvanised Steel	
Y	1	STREET LIGHTING	ASPEN COURT	CLEETHORPES	529974.38	406672.75	1980		43449	Urbis	Axia 16 LED 350mA	19 Watts	5.00 Metres	Galvanised Steel	
Y	2	STREET LIGHTING	ASPEN COURT	CLEETHORPES	529991.22	406688.88	1980		43450	Urbis	Axia 16 LED 350mA	19 Watts	5.00 Metres	Galvanised Steel	
Y	3	STREET LIGHTING	ASPEN COURT	CLEETHORPES	530006.84	406709.29	1980		43451	Urbis	Axia 16 LED 350mA	19 Watts	5.00 Metres	Galvanised Steel	
Y	4	STREET LIGHTING	ASPEN COURT	CLEETHORPES	529987.98	406723.53	1980		43452	Urbis	Axia 16 LED 350mA	19 Watts	5.00 Metres	Galvanised Steel	
Y	5	STREET LIGHTING	ASPEN COURT	CLEETHORPES	529969.87	406742.83	1980		43453	Urbis	Axia 16 LED 350mA	19 Watts	5.00 Metres	Galvanised Steel	
Y	6	STREET LIGHTING	ASPEN COURT	CLEETHORPES	529966.46	406769.28	1980		43454	Urbis	Axia 16 LED 350mA	19 Watts	5.00 Metres	Galvanised Steel	
Y	7	STREET LIGHTING	ASPEN COURT	CLEETHORPES	529987.72	406788.33	1980		43455	Urbis	Axia 16 LED 350mA	19 Watts	5.00 Metres	Galvanised Steel	
Y	1	STREET LIGHTING	DENBY DRIVE	CLEETHORPES	529427.39	407018.77	1998		47433	1 Urbis LED	Axia 16 LED 500mA	28 Watts	8.00 Metres	Galvanised Steel	
Y	1	STREET LIGHTING	HALTON PLACE	CLEETHORPES	529942.38	407683.1	1988		50076	Urbis	Axia 16 LED 350mA	19 Watts	5.00 Metres	Galvanised Steel	
Y	2	STREET LIGHTING	HALTON PLACE	CLEETHORPES	529947.31	407652.41	1988		50077	Urbis	Axia 16 LED 350mA	19 Watts	5.00 Metres	Galvanised Steel	
Y	3	STREET LIGHTING	HALTON PLACE	CLEETHORPES	529973.95	407649.26	1988		50078	Urbis	Axia 16 LED 350mA	19 Watts	5.00 Metres	Galvanised Steel	
Y	4	STREET LIGHTING	HALTON PLACE	CLEETHORPES	530002.3	407665.27	1988		50079	Urbis	Axia 16 LED 350mA	19 Watts	5.00 Metres	Galvanised Steel	
Y	5	STREET LIGHTING	HALTON PLACE	CLEETHORPES	530016.61	407645.33	1988		50080	Urbis	Axia 16 LED 350mA	19 Watts	5.00 Metres	Galvanised Steel	
Y	6	STREET LIGHTING	HALTON PLACE	CLEETHORPES	529976.1	407627.23	1988		50081	Urbis	Axia 16 LED 350mA	19 Watts	5.00 Metres	Galvanised Steel	
Y	7	STREET LIGHTING	HALTON PLACE	CLEETHORPES	529987.37	407594.13	1988		50082	Urbis	Axia 16 LED 350mA	19 Watts	5.00 Metres	Galvanised Steel	
Y	8	STREET LIGHTING	HALTON PLACE	CLEETHORPES	529960.02	407631.85	1988		50083	Urbis	Axia 16 LED 350mA	19 Watts	5.00 Metres	Galvanised Steel	
Y	9	STREET LIGHTING	HALTON PLACE	CLEETHORPES	529942	407632.86	1988		50084	Urbis	Axia 16 LED 350mA	19 Watts	5.00 Metres	Galvanised Steel	
Y	10	STREET LIGHTING	HALTON PLACE	CLEETHORPES	529916.93	407621.91	1988		50085	Urbis	Axia 16 LED 350mA	19 Watts	5.00 Metres	Galvanised Steel	
Y	11	STREET LIGHTING	HALTON PLACE	CLEETHORPES	529909.72	407596.02	1988		50086	Urbis	Axia 16 LED 350mA	19 Watts	5.00 Metres	Galvanised Steel	
Y	12	STREET LIGHTING	HALTON PLACE	CLEETHORPES	529917.93	407569.22	2022	10/01/2022	68803	Urbis	Axia 16 LED 350mA	19 Watts	6.00 Metres	Galvanised Steel	
Y	1	STREET LIGHTING	LYNTON RISE	CLEETHORPES	530253.51	407498.58	1988		53015	Urbis	Axia 16 LED 350mA	19 Watts	5.00 Metres	Galvanised Steel	
Y	2	STREET LIGHTING	LYNTON RISE	CLEETHORPES	530236.04	407527.38	1988		53016	Urbis	Axia 16 LED 350mA	19 Watts	5.00 Metres	Galvanised Steel	
Y	3	STREET LIGHTING	LYNTON RISE	CLEETHORPES	530203.89	407540.1	1988		53017	Urbis	Axia 16 LED 350mA	19 Watts	5.00 Metres	Galvanised Steel	
Y	4	STREET LIGHTING	LYNTON RISE	CLEETHORPES	530179.72	407553.65	1988		53018	Urbis	Axia 16 LED 350mA	19 Watts	5.00 Metres	Galvanised Steel	
Y	5	STREET LIGHTING	LYNTON RISE	CLEETHORPES	530149.47	407587.89	1988		53019	Urbis	Axia 16 LED 350mA	19 Watts	5.00 Metres	Galvanised Steel	
Y	6	STREET LIGHTING	LYNTON RISE	CLEETHORPES	530131.74	407596.81	1988		53020	Urbis	Axia 16 LED 350mA	19 Watts	5.00 Metres	Galvanised Steel	
Y	7	STREET LIGHTING	LYNTON RISE	CLEETHORPES	530154.28	407614.66	1988		53021	Urbis	Axia 16 LED 350mA	19 Watts	5.00 Metres	Galvanised Steel	
Y	8	STREET LIGHTING	LYNTON RISE	CLEETHORPES	530175.67	407632.32	1988		53022	Urbis	Axia 16 LED 350mA	19 Watts	5.00 Metres	Galvanised Steel	
Y	9	STREET LIGHTING	LYNTON RISE	CLEETHORPES	530203.01	407644.91	1988		53023	Urbis	Axia 16 LED 350mA	19 Watts	5.00 Metres	Galvanised Steel	
Y	10	STREET LIGHTING	LYNTON RISE	CLEETHORPES	530229.34	407666.62	1988		53024	Urbis	Axia 16 LED 350mA	19 Watts	5.00 Metres	Galvanised Steel	
Y	11	STREET LIGHTING	LYNTON RISE	CLEETHORPES	530245.54	407686.43	1988		53025	Urbis	Axia 16 LED 350mA	19 Watts	5.00 Metres	Galvanised Steel	
Y	1	STREET LIGHTING	MIDDLETHORPE ROAD	CLEETHORPES	529486.99	407390.56	2023	11/08/2023	69298	Urbis	Teceo 32 LED 500mA	52 Watts	8.00 Metres	Galvanised Steel	
Y	2	STREET LIGHTING	MIDDLETHORPE ROAD	CLEETHORPES	529491.26	407353.9	2023	11/08/2023	69342	Urbis	Teceo 32 LED 500mA	52 Watts	8.00 Metres	Galvanised Steel	
Y	3	STREET LIGHTING	MIDDLETHORPE ROAD	CLEETHORPES	529515.07	407320.34	2023	11/08/2023	69343	Urbis	Teceo 32 LED 500mA	52 Watts	8.00 Metres	Galvanised Steel	
Y	4	STREET LIGHTING	MIDDLETHORPE ROAD	CLEETHORPES	529544.33	407313.05	2023	11/08/2023	69344	Urbis	AXIA 3.2 24 LED 540mA	41 Watts	8.00 Metres	Galvanised Steel	
Y	5	STREET LIGHTING	MIDDLETHORPE ROAD	CLEETHORPES	529574.11	407292.29	2023	11/08/2023	69345	Urbis	AXIA 3.2 24 LED 540mA	41 Watts	8.00 Metres	Galvanised Steel	
Y	6	STREET LIGHTING	MIDDLETHORPE ROAD	CLEETHORPES	529603.55	407291.99	2023	11/08/2023	69346	Urbis	Teceo 32 LED 500mA	52 Watts	8.00 Metres	Galvanised Steel	
Y	7	STREET LIGHTING	MIDDLETHORPE ROAD	CLEETHORPES	529631.44	407296.43	2023	11/08/2023	69347	Urbis	Teceo 32 LED 500mA	52 Watts	8.00 Metres	Galvanised Steel	
Y	8	STREET LIGHTING	MIDDLETHORPE ROAD	CLEETHORPES	529658.68	407300.21	2023	11/08/2023	69348	Urbis	AXIA 3.2 24 LED 540mA	41 Watts	8.00 Metres	Galvanised Steel	
Y	9	STREET LIGHTING	MIDDLETHORPE ROAD	CLEETHORPES	529695.53	407308.1	2023	11/08/2023	69349	Urbis	Teceo 32 LED 500mA	52 Watts	8.00 Metres	Galvanised Steel	
Y	10	STREET LIGHTING	MIDDLETHORPE ROAD	CLEETHORPES	529727.48	407302.41	2023	11/08/2023	69350	Urbis	Teceo 32 LED 500mA	52 Watts	8.00 Metres	Galvanised Steel	
Y	11	STREET LIGHTING	MIDDLETHORPE ROAD	CLEETHORPES	529746.5	407288.34	2023	11/08/2023	69351	Urbis	Teceo 32 LED 500mA	52 Watts	8.00 Metres	Galvanised Steel	
Y	12	STREET LIGHTING	MIDDLETHORPE ROAD	CLEETHORPES	529780.75	407271	2023	11/08/2023	69352	Urbis	Teceo 32 LED 500mA	52 Watts	8.00 Metres	Galvanised Steel	
Y	13	STREET LIGHTING	MIDDLETHORPE ROAD	CLEETHORPES	529802.44	407254.8	2023	11/08/2023	69353	Urbis	Teceo 32 LED 500mA	52 Watts	8.00 Metres	Galvanised Steel	
Y	14	STREET LIGHTING	MIDDLETHORPE ROAD	CLEETHORPES	529835.7	407231.6	2023	11/08/2023	69354	Urbis	Teceo 32 LED 500mA	52 Watts	8.00 Metres	Galvanised Steel	
Y	15	STREET LIGHTING	MIDDLETHORPE ROAD	CLEETHORPES	529859.1	407207.13	2023	11/08/2023	69355	Urbis	AXIA 3.2 24 LED 540mA	41 Watts	8.00 Metres	Galvanised Steel	
Y	16	STREET LIGHTING	MIDDLETHORPE ROAD	CLEETHORPES	529889.16	407191.21	2023	11/08/2023	69356	Urbis	AXIA 3.2 24 LED 540mA	41 Watts	8.00 Metres	Galvanised Steel	
Y	17	STREET LIGHTING	MIDDLETHORPE ROAD	CLEETHORPES	529898.91	407170.02	2023	11/08/2023	69357	Urbis	AXIA 3.2 24 LED 540mA	41 Watts	8.00 Metres	Galvanised Steel	
Y	18	STREET LIGHTING	MIDDLETHORPE ROAD	CLEETHORPES	529916.68	407144.73	2013	01/09/2013	53587	1 Urbis LED	Teceo 40 LED 500mA	64 Watts	10.00 Metres	Steel	
Y	1	STREET LIGHTING	OAK WAY	CLEETHORPES	529759.4	406662.19	1996		54307	1 Urbis LED	Axia 16 LED 500mA	28 Watts	8.00 Metres	Galvanised Steel	
Y	2	STREET LIGHTING	OAK WAY	CLEETHORPES	529766.99	406684.02	2002		54308	1 Urbis LED	Axia 16 LED 500mA	28 Watts	6.00 Metres	Stainless Steel	
Y	3	STREET LIGHTING	OAK WAY	CLEETHORPES	529756.11	406718.07	2002		54309	1 Urbis LED	Axia 16 LED 500mA	28 Watts	6.00 Metres	Stainless Steel	
Y	4	STREET LIGHTING	OAK WAY	CLEETHORPES	529754.84	406746.55	2002		54310	1 Urbis LED	Axia 16 LED 500mA	28 Watts	6.00 Metres	Stainless Steel	
Y	5	STREET LIGHTING	OAK WAY	CLEETHORPES	529767.37	406774.72	2002		54311	1 Urbis LED	Axia 16 LED 500mA	28 Watts	6.00 Metres	Stainless Steel	
Y	6	STREET LIGHTING	OAK WAY	CLEETHORPES	529776.87	406801.05	1996		54312	1 Urbis LED	Axia 16 LED 500mA	28 Watts	5.00 Metres	Galvanised Steel	
Y	7	STREET LIGHTING	OAK WAY	CLEETHORPES	529890.52	406805.35	2023	20/03/2023	69216	Urbis	Axia 24 LED 500mA	28 Watts	6.00 Metres	Galvanised Steel	
Y	8	STREET LIGHTING	OAK WAY	CLEETHORPES	529804.21	406823.77	1996		54314	1 Urbis LED	Axia 16 LED 500mA	28 Watts	5.00 Metres	Galvanised Steel	
Y	9	STREET LIGHTING	OAK WAY	CLEETHORPES	529828.89	406800.54	1996		54315	1 Urbis LED	Axia 16 LED 500mA	28 Watts	5.00 Metres	Galvanised Steel	
Y	10	STREET LIGHTING	OAK WAY	CLEETHORPES	529853.32	406776.68	1996		54316	1 Urbis LED	Axia 16 LED 500mA	28 Watts	5.00 Metres	Galvanised Steel	
Y	11	STREET LIGHTING	OAK WAY	CLEETHORPES	529864.71	406772.57	1996		54317	1 Urbis LED	Axia 16 LED 500mA	28 Watts	5.00 Metres	Galvanised Steel	
Y	12	STREET LIGHTING	OAK WAY	CLEETHORPES	529876.23	406756.3	1996		54318	1 Urbis LED	Axia 16 LED 500mA	28 Watts	5.00 Metres	Galvanised Steel	
Y	13	STREET LIGHTING	OAK WAY	CLEETHORPES	529862.56	406755.86	1996		54319	1 Urbis LED	Axia 16 LED 500mA	28 Watts	5.00 Metres	Galvanised Steel	
Y	14	STREET LIGHTING	OAK WAY	CLEETHORPES	529843.07	406763.01	1996		54320	1 Urbis LED	Axia 16 LED 500mA	28 Watts	5.00 Metres	Galvanised Steel	
Y	1	STREET LIGHTING	QUORN MEWS	CLEETHORPES	530194.52	407030.24	1997		55853	Urbis	Axia 16 LED 350mA	19 Watts	5.00 Metres	Galvanised Steel	
Y	2	STREET LIGHTING	QUORN MEWS	CLEETHORPES	530171.86	407055.62	1997		55854	Urbis	Axia 16 LED 350mA	19 Watts	5.00 Metres	Galvanised Steel	
Y	3	STREET LIGHTING	QUORN MEWS	CLEETHORPES	530150.72	407080.5	1997		55855	Urbis	Axia 16 LED 350mA	19 Watts	5.00 Metres	Galvanised Steel	
Y	4	STREET LIGHTING	QUORN MEWS	CLEETHORPES	530150.47	407049.68	1997		55856	Urbis	Axia 16 LED 350mA	19 Watts	5.00 Metres	Galvanised Steel	
Y	5	STREET LIGHTING	QUORN MEWS	CLEETHORPES	530135.53	407031.89	1997		55857	Urbis	Axia 16 LED 350mA	19 Watts	5.00 Metres	Galvanised Steel	
Y	6	STREET LIGHTING	QUORN MEWS	CLEETHORPES	530131.99	407020.31	1997		55858	Urbis	Axia 16 LED 350mA	19 Watts	5.00 Metres	Galvanised Steel	
Y	7	STREET LIGHTING	QUORN MEWS	CLEETHORPES	530142.11	407002.27	1997		55859	Urbis	Axia 16 LED 350mA	19 Watts	5.00 Metres	Galvanised Steel	
Y	8	STREET LIGHTING	QUORN MEWS	CLEETHORPES	530111.48	407017.78	1997		55860	Urbis	Axia 16 LED 350mA	19 Watts	5.00 Metres	Galvanised Steel	
Y	9	STREET LIGHTING	QUORN MEWS	CLEETHORPES	530115.28	407031.2	1997		55861	Urbis	Axia 16 LED 350mA	19 Watts	5.00 Metres	Galvanised Steel	
Y	10	STREET LIGHTING	QUORN MEWS	CLEETHORPES	530095.41	407047.33	1997		55862	Urbis	Axia 16 LED 350mA	19 Watts	5.00 Metres	Galvanised Steel	
Y	1	STREET LIGHTING	SANDRINGHAM ROAD	CLEETHORPES	529460.42	408001.21	1990		56562	1 Urbis LED	Teceo 40 LED 500mA	64 Watts	10.00 Metres	Galvanised Steel	
Y	2	STREET LIGHTING	SANDRINGHAM ROAD	CLEETHORPES	529465.1	407969.69	1990		56563	1 Urbis LED	Teceo 40 LED 500mA	64 Watts	8.00 Metres	Galvanised Steel	
Y	3	STREET LIGHTING	SANDRINGHAM ROAD	CLEETHORPES	529461.43	407938.93	2014		56564	1 Urbis LED	Teceo 40 LED 500mA	64 Watts	8.00 Metres	Galvanised Steel	
Y	4	STREET LIGHTING	SANDRINGHAM ROAD	CLEETHORPES	529472.16	407909.29	1990		56565	1 Urbis LED	Teceo 40 LED 500mA	64 Watts	8.00 Metres	Galvanised Steel	
Y	5	STREET LIGHTING	SANDRINGHAM ROAD	CLEETHORPES	529486.59	407885.56	1990		56566	1 Urbis LED	Teceo 40 LED 500mA	64 Watts	8.00 Metres	Galvanised Steel	
Y	6	STREET LIGHTING	SANDRINGHAM ROAD	CLEETHORPES	529508.49	407874.8	1990		56567	1 Urbis LED	Teceo 40 LED 500mA	64 Watts	8.00 Metres	Galvanised Steel	
Y	7	STREET LIGHTING	SANDRINGHAM ROAD	CLEETHORPES	529519.5	407846.13	1990		56568	1 Urbis LED	Teceo 40 LED 500mA	64 Watts	8.00 Metres	Galvanised Steel	
Y	8	STREET LIGHTING	SANDRINGHAM ROAD	CLEETHORPES	529548.87	407829.74	1990		56569	1 Urbis LED	Teceo 40 LED 500mA	64 Watts	8.00 Metres	Galvanised Steel	
Y	9	STREET LIGHTING	SANDRINGHAM ROAD	CLEETHORPES	529556.84	407805.12	1990		56570	1 Urbis LED	Teceo 40 LED 500mA	64 Watts	8.00 Metres	Galvanised Steel	
Y	10	STREET LIGHTING	SANDRINGHAM ROAD	CLEETHORPES	529577.94	407782.08	1990		56571	1 Urbis LED	Teceo 40 LED 500mA	64 Watts	8.00 Metres	Galvanised Steel	

Y	11	STREET LIGHTING	SANDRINGHAM ROAD	CLEETHORPES	529607.18	407766.07	1990		56572	1 Urbis LED	Teceo 40 LED 500mA	64 Watts	8.00 Metres	Galvanised Steel	
Y	12	STREET LIGHTING	SANDRINGHAM ROAD	CLEETHORPES	529628.09	407735.85	2023	21/08/2023	69299	Urbis	Teceo 40 LED 500mA	64 Watts	8.00 Metres	Galvanised Steel	
Y	13	STREET LIGHTING	SANDRINGHAM ROAD	CLEETHORPES	529666.51	407721.07	2023	21/08/2023	69309	Urbis	Teceo 40 LED 500mA	64 Watts	8.00 Metres	Galvanised Steel	
Y	14	STREET LIGHTING	SANDRINGHAM ROAD	CLEETHORPES	529695.79	407693.58	2023	21/08/2023	69310	Urbis	Teceo 40 LED 500mA	64 Watts	8.00 Metres	Galvanised Steel	
Y	15	STREET LIGHTING	SANDRINGHAM ROAD	CLEETHORPES	529740.46	407687.65	2023	21/08/2023	69311	Urbis	Teceo 40 LED 500mA	64 Watts	8.00 Metres	Galvanised Steel	
Y	16	STREET LIGHTING	SANDRINGHAM ROAD	CLEETHORPES	529759.91	407670.32	2023	21/08/2023	69312	Urbis	Teceo 40 LED 500mA	64 Watts	8.00 Metres	Galvanised Steel	
Y	17	STREET LIGHTING	SANDRINGHAM ROAD	CLEETHORPES	529800	407665	2005		56578	1 Urbis LED	Teceo 40 LED 500mA	64 Watts	8.00 Metres	Stainless Steel	
Y	18	STREET LIGHTING	SANDRINGHAM ROAD	CLEETHORPES	529841.04	407675.01	2020	26/06/2020	67875	Urbis	Teceo 40 LED 500mA	64 Watts	8.00 Metres	Galvanised Steel	
Y	19	STREET LIGHTING	SANDRINGHAM ROAD	CLEETHORPES	529879.42	407674.29	2023	21/08/2023	69313	Urbis	Teceo 40 LED 500mA	64 Watts	8.00 Metres	Galvanised Steel	
Y	20	STREET LIGHTING	SANDRINGHAM ROAD	CLEETHORPES	529914.21	407695.74	2023	21/08/2023	69314	Urbis	Teceo 40 LED 500mA	64 Watts	8.00 Metres	Galvanised Steel	
Y	21	STREET LIGHTING	SANDRINGHAM ROAD	CLEETHORPES	529950.75	407704.72	2023	21/08/2023	69315	Urbis	Teceo 40 LED 500mA	64 Watts	8.00 Metres	Galvanised Steel	
Y	22	STREET LIGHTING	SANDRINGHAM ROAD	CLEETHORPES	529980.31	407735.55	2023	21/08/2023	69316	Urbis	Teceo 40 LED 500mA	64 Watts	8.00 Metres	Galvanised Steel	
Y	23	STREET LIGHTING	SANDRINGHAM ROAD	CLEETHORPES	530019.24	407752.47	2023	21/08/2023	69317	Urbis	Teceo 40 LED 500mA	64 Watts	8.00 Metres	Galvanised Steel	
Y	24	STREET LIGHTING	SANDRINGHAM ROAD	CLEETHORPES	530036.64	407777.24	2023	21/08/2023	69318	Urbis	Teceo 40 LED 500mA	64 Watts	8.00 Metres	Galvanised Steel	
Y	25	STREET LIGHTING	SANDRINGHAM ROAD	CLEETHORPES	530057.82	407793.29	2023	21/08/2023	69319	Urbis	Teceo 40 LED 500mA	64 Watts	8.00 Metres	Galvanised Steel	
Y	26	STREET LIGHTING	SANDRINGHAM ROAD	CLEETHORPES	530087.63	407803.8	2023	21/08/2023	69320	Urbis	Teceo 40 LED 500mA	64 Watts	8.00 Metres	Galvanised Steel	
Y	27	STREET LIGHTING	SANDRINGHAM ROAD	CLEETHORPES	530112.21	407835.24	2023	21/08/2023	69321	Urbis	Teceo 40 LED 500mA	64 Watts	8.00 Metres	Galvanised Steel	
Y	28	STREET LIGHTING	SANDRINGHAM ROAD	CLEETHORPES	530141.92	407845.3	2023	21/08/2023	69322	Urbis	Teceo 40 LED 500mA	64 Watts	8.00 Metres	Galvanised Steel	
Y	29	STREET LIGHTING	SANDRINGHAM ROAD	CLEETHORPES	530166.23	407876.68	2023	21/08/2023	69323	Urbis	Teceo 40 LED 500mA	64 Watts	8.00 Metres	Galvanised Steel	
Y	30	STREET LIGHTING	SANDRINGHAM ROAD	CLEETHORPES	530192.24	407896.25	2023	21/08/2023	69324	Urbis	Teceo 40 LED 500mA	64 Watts	8.00 Metres	Galvanised Steel	
Y	31	STREET LIGHTING	SANDRINGHAM ROAD	CLEETHORPES	530234.78	407917.04	2023	21/08/2023	69325	Urbis	Teceo 40 LED 500mA	64 Watts	8.00 Metres	Galvanised Steel	
Y	32	STREET LIGHTING	SANDRINGHAM ROAD	CLEETHORPES	530245.89	407937.87	2023	21/08/2023	69326	Urbis	Teceo 40 LED 500mA	64 Watts	8.00 Metres	Galvanised Steel	
Y	33	STREET LIGHTING	SANDRINGHAM ROAD	CLEETHORPES	530279.65	407951.02	2023	21/08/2023	69327	Urbis	Teceo 40 LED 500mA	64 Watts	8.00 Metres	Galvanised Steel	
Y	34	STREET LIGHTING	SANDRINGHAM ROAD	CLEETHORPES	530299.93	407979.6	2023	21/08/2023	69328	Urbis	Teceo 40 LED 500mA	64 Watts	8.00 Metres	Galvanised Steel	
Y	1	STREET LIGHTING	TAYLORS AVENUE	CLEETHORPES	530800.7	408047.35	1993		58771	1 Urbis LED	Teceo 48 LED 500mA	79 Watts	10.00 Metres	Galvanised Steel	
Y	2	STREET LIGHTING	TAYLORS AVENUE	CLEETHORPES	530805.26	408026.55	1993		58772	1 Urbis LED	Teceo 48 LED 500mA	79 Watts	10.00 Metres	Galvanised Steel	
Y	3	STREET LIGHTING	TAYLORS AVENUE	CLEETHORPES	530782.73	408028.51	1993		58773	1 Urbis LED	Teceo 48 LED 500mA	79 Watts	10.00 Metres	Galvanised Steel	
Y	4	STREET LIGHTING	TAYLORS AVENUE	CLEETHORPES	530766.89	407993.18	1991		58774	1 Urbis LED	Teceo 48 LED 500mA	79 Watts	10.00 Metres	Galvanised Steel	
Y	5	STREET LIGHTING	TAYLORS AVENUE	CLEETHORPES	530731.07	407974.13	1991		58775	1 Urbis LED	Teceo 48 LED 500mA	79 Watts	10.00 Metres	Galvanised Steel	
Y	6	STREET LIGHTING	TAYLORS AVENUE	CLEETHORPES	530719.68	407944.58	1991		58776	1 Urbis LED	Teceo 48 LED 500mA	79 Watts	10.00 Metres	Galvanised Steel	
Y	7	STREET LIGHTING	TAYLORS AVENUE	CLEETHORPES	530685.25	407926.16	1991		58777	1 Urbis LED	Ampera 48 LED 700mA	104 Watts	10.00 Metres	Galvanised Steel	
Y	8	STREET LIGHTING	TAYLORS AVENUE	CLEETHORPES	530671.7	407894.01	1991		58778	1 Urbis LED	Teceo 48 LED 500mA	79 Watts	10.00 Metres	Galvanised Steel	
Y	9	STREET LIGHTING	TAYLORS AVENUE	CLEETHORPES	530633.98	407872.05	1991		58779	1 Urbis LED	Ampera 48 LED 700mA	104 Watts	10.00 Metres	Galvanised Steel	
Y	10	STREET LIGHTING	TAYLORS AVENUE	CLEETHORPES	530621.45	407841.67	1988		58780	1 Urbis LED	Teceo 48 LED 500mA	79 Watts	10.00 Metres	Galvanised Steel	
Y	11	STREET LIGHTING	TAYLORS AVENUE	CLEETHORPES	530586.77	407822.62	1988		58781	1 Urbis LED	Teceo 48 LED 500mA	79 Watts	10.00 Metres	Galvanised Steel	
Y	12	STREET LIGHTING	TAYLORS AVENUE	CLEETHORPES	530570.44	407788.38	1988		58782	1 Urbis LED	Teceo 48 LED 500mA	79 Watts	10.00 Metres	Galvanised Steel	
Y	13	STREET LIGHTING	TAYLORS AVENUE	CLEETHORPES	530533.23	407767.25	1988		58783	1 Urbis LED	Teceo 48 LED 500mA	79 Watts	10.00 Metres	Galvanised Steel	
Y	14	STREET LIGHTING	TAYLORS AVENUE	CLEETHORPES	530520.57	407736.11	1988		58784	1 Urbis LED	Teceo 48 LED 500mA	79 Watts	10.00 Metres	Galvanised Steel	
Y	15	STREET LIGHTING	TAYLORS AVENUE	CLEETHORPES	530486.52	407719.34	1988		58785	1 Urbis LED	Teceo 48 LED 500mA	79 Watts	10.00 Metres	Galvanised Steel	
Y	16	STREET LIGHTING	TAYLORS AVENUE	CLEETHORPES	530465.89	407698.56	1988		58786	1 Urbis LED	Teceo 48 LED 500mA	79 Watts	10.00 Metres	Galvanised Steel	
Y	17	STREET LIGHTING	TAYLORS AVENUE	CLEETHORPES	530443.23	407672.23	1988		58787	1 Urbis LED	Teceo 48 LED 500mA	79 Watts	10.00 Metres	Galvanised Steel	
Y	18	STREET LIGHTING	TAYLORS AVENUE	CLEETHORPES	530423.74	407652.16	1988		58788	1 Urbis LED	Ampera 48 LED 700mA	104 Watts	10.00 Metres	Galvanised Steel	
Y	19	STREET LIGHTING	TAYLORS AVENUE	CLEETHORPES	530411.34	407624.56	1988		58789	1 Urbis LED	Teceo 48 LED 500mA	79 Watts	10.00 Metres	Galvanised Steel	
Y	20	STREET LIGHTING	TAYLORS AVENUE	CLEETHORPES	530379.31	407606.9	1988		58790	1 Urbis LED	Teceo 48 LED 500mA	79 Watts	10.00 Metres	Galvanised Steel	
Y	21	STREET LIGHTING	TAYLORS AVENUE	CLEETHORPES	530363.54	407573.52	1988		58791	1 Urbis LED	Teceo 48 LED 500mA	79 Watts	10.00 Metres	Galvanised Steel	
Y	22	STREET LIGHTING	TAYLORS AVENUE	CLEETHORPES	530329.6	407570.14	2023	22/09/2023	69306	Urbis	Teceo 48 LED 500mA	79 Watts	12.00 Metres	Galvanised Steel	
Y	23	STREET LIGHTING	TAYLORS AVENUE	CLEETHORPES	530316.83	407525.29	1988		58793	Urbis	AXIA 3.2 32 LED 630 mA	62 Watts	10.00 Metres	Galvanised Steel	
Y	24	STREET LIGHTING	TAYLORS AVENUE	CLEETHORPES	530285.9	407509.18	1988		58794	1 Urbis LED	Teceo 48 LED 500mA	79 Watts	10.00 Metres	Galvanised Steel	
Y	25	STREET LIGHTING	TAYLORS AVENUE	CLEETHORPES	530273.2	407479.63	1988		58795	1 Urbis LED	Teceo 48 LED 500mA	79 Watts	10.00 Metres	Galvanised Steel	
Y	26	STREET LIGHTING	TAYLORS AVENUE	CLEETHORPES	530244.58	407448.32	1988		58796	1 Urbis LED	Ampera 48 LED 700mA	104 Watts	10.00 Metres	Galvanised Steel	
Y	27	STREET LIGHTING	TAYLORS AVENUE	CLEETHORPES	530223.3	407426.42	1988		58797	1 Urbis LED	Teceo 48 LED 500mA	79 Watts	10.00 Metres	Galvanised Steel	
Y	28	STREET LIGHTING	TAYLORS AVENUE	CLEETHORPES	530191.63	407411.05	1988		58798	1 Urbis LED	Teceo 48 LED 500mA	79 Watts	10.00 Metres	Galvanised Steel	
Y	29	STREET LIGHTING	TAYLORS AVENUE	CLEETHORPES	530174.17	407374.7	1993		58799	1 Urbis LED	Teceo 48 LED 500mA	79 Watts	10.00 Metres	Galvanised Steel	
Y	30	STREET LIGHTING	TAYLORS AVENUE	CLEETHORPES	530137.21	407354.19	1988		58800	1 Urbis LED	Teceo 48 LED 500mA	79 Watts	10.00 Metres	Galvanised Steel	
Y	31	STREET LIGHTING	TAYLORS AVENUE	CLEETHORPES	530120.02	407318.93	1988		58801	1 Urbis LED	Teceo 48 LED 500mA	79 Watts	10.00 Metres	Galvanised Steel	
Y	32	STREET LIGHTING	TAYLORS AVENUE	CLEETHORPES	530090.63	407304.81	1993		58802	1 Urbis LED	Teceo 48 LED 500mA	79 Watts	10.00 Metres	Galvanised Steel	
Y	33	STREET LIGHTING	TAYLORS AVENUE	CLEETHORPES	530078.1	407274.62	1988		58803	1 Urbis LED	Teceo 48 LED 500mA	79 Watts	10.00 Metres	Galvanised Steel	
Y	34	STREET LIGHTING	TAYLORS AVENUE	CLEETHORPES	530043.41	407255.7	1988		58804	1 Urbis LED	Teceo 48 LED 500mA	79 Watts	10.00 Metres	Galvanised Steel	
Y	35	STREET LIGHTING	TAYLORS AVENUE	CLEETHORPES	530028.33	407222.63	1988		58805	1 Urbis LED	Teceo 48 LED 500mA	79 Watts	10.00 Metres	Galvanised Steel	
Y	36	STREET LIGHTING	TAYLORS AVENUE	CLEETHORPES	529992.25	407202.88	1988		58806	1 Urbis LED	Teceo 48 LED 500mA	79 Watts	10.00 Metres	Galvanised Steel	
Y	37	STREET LIGHTING	TAYLORS AVENUE	CLEETHORPES	529979.13	407169.49	2020	14/02/2020	67792	Urbis	Ampera 48 LED 700mA	104 Watts	12.00 Metres	Galvanised Steel	
Y	38	STREET LIGHTING	TAYLORS AVENUE	CLEETHORPES	529947.47	407160.73	2009		58808	1 Urbis LED	Ampera 48 LED 700mA	104 Watts	10.00 Metres	Steel	
Y	39	STREET LIGHTING	TAYLORS AVENUE	CLEETHORPES	529943.65	407132.64	1993		58809	1 Urbis LED	Ampera 48 LED 700mA	104 Watts	10.00 Metres	Galvanised Steel	
Y	40	STREET LIGHTING	TAYLORS AVENUE	CLEETHORPES	529904.96	407112.75	2009		58810	1 Urbis LED	Ampera 48 LED 700mA	104 Watts	10.00 Metres	Steel	
Y	41	STREET LIGHTING	TAYLORS AVENUE	CLEETHORPES	529882.31	407087.92	2009		58811	1 Urbis LED	Ampera 48 LED 700mA	104 Watts	10.00 Metres	Steel	
Y	42	STREET LIGHTING	TAYLORS AVENUE	CLEETHORPES	529860.79	407063.97	1993		58812	1 Urbis LED	Ampera 48 LED 700mA	104 Watts	10.00 Metres	Galvanised Steel	
Y	43	STREET LIGHTING	TAYLORS AVENUE	CLEETHORPES	529842.21	407027.47	1988		58813	1 Urbis LED	Teceo 48 LED 500mA	79 Watts	10.00 Metres	Galvanised Steel	
Y	44	STREET LIGHTING	TAYLORS AVENUE	CLEETHORPES	529812.97	407014.31	1988		58814	Urbis	AXIA 3.2 32 LED 630 mA	62 Watts	10.00 Metres	Galvanised Steel	
Y	45	STREET LIGHTING	TAYLORS AVENUE	CLEETHORPES	529791.8	406975.36	1991		58815	1 Urbis LED	Teceo 48 LED 500mA	79 Watts	10.00 Metres	Galvanised Steel	
Y	46	STREET LIGHTING	TAYLORS AVENUE	CLEETHORPES	529761.6	406961.09	1988		58816	1 Urbis LED	Teceo 48 LED 500mA	79 Watts	10.00 Metres	Galvanised Steel	
Y	47	STREET LIGHTING	TAYLORS AVENUE	CLEETHORPES	529740.8	406920.87	1993		58817	1 Urbis LED	Teceo 48 LED 500mA	79 Watts	10.00 Metres	Galvanised Steel	
Y	48	STREET LIGHTING	TAYLORS AVENUE	CLEETHORPES	529704.52	406901.26	1991		58818	1 Urbis LED	Teceo 48 LED 500mA	79 Watts	10.00 Metres	Galvanised Steel	
Y	49	STREET LIGHTING	TAYLORS AVENUE	CLEETHORPES	529685.19	406862.87	1988		58819	1 Urbis LED	Teceo 48 LED 500mA	79 Watts	10.00 Metres	Galvanised Steel	
Y	50	STREET LIGHTING	TAYLORS AVENUE	CLEETHORPES	529655.18	406849.34	1993		58820	1 Urbis LED	Teceo 48 LED 500mA	79 Watts	10.00 Metres	Galvanised Steel	
Y	51	STREET LIGHTING	TAYLORS AVENUE	CLEETHORPES	529638.79	406814.08	1988		58821	1 Urbis LED	Teceo 48 LED 500mA	79 Watts	10.00 Metres	Galvanised Steel	
Y	52	STREET LIGHTING	TAYLORS AVENUE	CLEETHORPES	529617.25	406790.61	1988		58822	1 Urbis LED	Teceo 48 LED 500mA	79 Watts	10.00 Metres	Galvanised Steel	
Y	1	STREET LIGHTING	THORESBY PLACE	CLEETHORPES	530115.67	407699.6	1997		59098	Urbis	Axia 16 LED 350mA	19 Watts	6.00 Metres	Galvanised Steel	
Y	2	STREET LIGHTING	THORESBY PLACE	CLEETHORPES	530087.83	407687.64	1997		59099	Urbis	Axia 16 LED 350mA	19 Watts	6.00 Metres	Galvanised Steel	
Y	3	STREET LIGHTING	THORESBY PLACE	CLEETHORPES	530100.99	407653.4	1997		59100	Urbis	Axia 16 LED 350mA	19 Watts	6.00 Metres	Galvanised Steel	
Y	4	STREET LIGHTING	THORESBY PLACE	CLEETHORPES	530075.29	407672.26	1997		59101	Urbis	Axia 16 LED 350mA	19 Watts	6.00 Metres	Galvanised Steel	
Y	5	STREET LIGHTING	THORESBY PLACE	CLEETHORPES	530062.26	407701.06	1997		59102	Urbis	Axia 16 LED 350mA	19 Watts	6.00 Metres	Galvanised Steel	
Y	1	STREET LIGHTING	WELLS CRESCENT	CLEETHORPES	530056.3	406774.38	1988		60253	Urbis	Axia 16 LED 350mA	19 Watts	5.00 Metres	Galvanised Steel	
Y	2	STREET LIGHTING	WELLS CRESCENT	CLEETHORPES	530033.01	406786.02	1988		60254	Urbis	Axia 16 LED 350mA	19 Watts	5.00 Metres	Galvanised Steel	
Y	3	STREET LIGHTING	WELLS CRESCENT	CLEETHORPES	530023.47	406764.89	1988		60255	Urbis	Axia 16 LED 350mA	19 Watts	5.00 Metres	Galvanised Steel	
Y	4	STREET LIGHTING	WELLS CRESCENT	CLEETHORPES	530047.06	406812.92	1988		60256	Urbis	Axia 16 LED 350mA	19 Watts	5.00 Metres	Galvanised Steel	
Y	5	STREET LIGHTING	WELLS CRESCENT	CLEETHORPES	530027.31	406839.5	1988		60257	Urbis	Axia 16 LED 350mA	19 Watts	5.00 Metres	Galvanised Steel	
Y	6	STREET LIGHTING	WELLS CRESCENT	CLEETHORPES	530011.15	406819.28	1988		60258	Urbis	Axia 16 LED 350mA	19 Watts	5.00 Metres	Galvanised Steel	
Y	7	STREET LIGHTING	WELLS CRESCENT	CLEETHORPES	530012.18	406802.87	1988		60259	Urbis	Axia 16 LED 350mA	19 Watts	5.00 Metres	Galvanised Steel	
Y	1	STREET LIGHTING	BUCK BECK WAY	CLEETHORPES	529822.05	406592.97	1966		44883	1 Urbis LED	Axia 16 LED 500mA	28 Watts	8.00 Metres	Galvanised Steel	
Y	2	STREET LIGHTING	BUCK BECK WAY	CLEETHORPES	529832.56	406567.03	1966		44884	1 Urbis LED	Axia 16 LED 500mA	28 Watts	5.00 Metres	Galvanised Steel	
Y	3	STREET LIGHTING	BUCK BECK WAY	CLEETHORPES	529858.63	406546.33	1966		44885	1 Urbis LED	Axia 16 LED 500mA	28 Watts	5.00 Metres	Galvanised Steel	
Y	4	STREET LIGHTING	BUCK BECK WAY	CLEETHORPES	529823.7	406546.71	1966		44886	1 Urbis LED	Axia 16 LED 500mA	28 Watts	5.00 Metres	Galvanised Steel	
Y	5	STREET LIGHTING	BUCK BECK WAY	CLEETHORPES	529800.66	406527.98	2007	14/11/2007	44887	1 Urbis LED	Axia 16 LED 500mA	28 Watts	6.00 Metres	Steel	
Y	6	STREET LIGHTING	BUCK BECK WAY	CLEETHORPES	529804.83	406574.3	1966		44888	1 Urbis LED	Axia 16 LED 500mA	28 Watts	5.00 Metres	Galvanised Steel	
Y	7	STREET LIGHTING	BUCK BECK WAY	CLEETHORPES	529786.73	406596.89	1966		44889	1 Urbis LED	Axia 16 LED 500mA	28 Watts	5.00 Metres	Galvanised Steel	
Y	8	STREET LIGHTING	BUCK BECK WAY	CLEETHORPES	529756.51	406582.66	2022	04/01/2022	68802	Urbis	Axia 24 LED 500mA	28 Watts	6.00 Metres	Galvanised Steel	
Y	9	STREET LIGHTING	BUCK BECK WAY	CLEETHORPES	529740.03	406563.29	1995		44891	1 Urbis LED	Axia 16 LED 500mA	28 Watts	6.00 Metres	Galvanised Steel	
Y	1	STREET LIGHTING	CATTISTOCK ROAD	CLEETHORPES	530036.04	407041.4	1997		45498	Urbis	Axia 16 LED 350mA	19 Watts	6.00 Metres	Galvanised Steel	
Y	2	STREET LIGHTING	CATTISTOCK ROAD	CLEETHORPES	530049.71	407070.71	1997		45499	Urbis	Axia 16 LED 350mA	19 Watts	6.00 Metres	Galvanised Steel	
Y	3	STREET LIGHTING	CATTISTOCK ROAD	CLEETHORPES	530080.85	407083.94	1997		45500	Urbis	Axia 16 LED 350mA	19 Watts	6.00 Metres	Galvanised Steel	
Y	4	STREET LIGHTING	CATTISTOCK ROAD	CLEETHORPES	530111.35	407103.37	1997		45501	Urbis	Axia 16 LED 350mA	19 Watts	6.00 Metres	Galvanised Steel	
Y	5	STREET LIGHTING	CATTISTOCK ROAD	CLEETHORPES	530135.59	407120.44	1997		45502	Urbis	Axia 16 LED 350mA	19 Watts	6.00 Metres	Galvanised Steel	
Y	6	STREET LIGHTING	CATTISTOCK ROAD	CLEETHORPES	530160.04	407138.47	2000		45503	Urbis	Axia 16 LED 350mA	19 Watts	6.00 Metres	Galvanised Steel	
Y	7	STREET LIGHTING	CATTISTOCK ROAD	CLEETHORPES	530180.86	407164.25	2000		45504	Urbis	Axia 16 LED 350mA	19 Watts	6.00 Metres	Galvanised Steel	
Y	8	STREET LIGHTING	CATTISTOCK ROAD	CLEETHORPES	530171.13	407192.96	2000		45505	Urbis	Axia 16 LED 350mA	19 Watts	6.00 Metres	Galvanised Steel	
Y	9	STREET LIGHTING	CATTISTOCK ROAD	CLEETHORPES	530155.86	407211.26	2000		45506	Urbis	Axia 16 LED 350mA	19 Watts	6.00 Metres	Galvanised Steel	
Y	10	STREET LIGHTING	CATTISTOCK ROAD	CLEETHORPES	530138.72	407228.11	2000		45507	Urbis	Axia 16 LED 350mA	19 Watts	6.00 Metres	Galvanised Steel	
Y	11	STREET LIGHTING	CATTISTOCK ROAD	CLEETHORPES	530116.96	407246.71	2000		45508	Urbis	Axia 16 LED 350mA	19 Watts	6.00 Metres	Galvanised Steel	
Y	12	STREET LIGHTING	CATTISTOCK ROAD	CLEETHORPES	530098.22	407261.84	2004		45509	Urbis	Axia 16 LED 350mA	19 Watts	6.00 Metres	Galvanised Steel	
Y	1	STREET LIGHTING	BELVOIR PARK WALK	CLEETHORPES	529888.48	406734.35	1981		43988	Urbis	Axia 16 LED 350mA	19 Watts	5.00 Metres	Galvanised Steel	

Y	2	STREET LIGHTING	BELVOIR PARK WALK	CLEETHORPES	529945.82	406721.81	2013		43989	Urbis	Axia 16 LED 350mA	19 Watts	6.00 Metres	Galvanised Steel	
Y	3	STREET LIGHTING	BELVOIR PARK WALK	CLEETHORPES	529931.01	406737.83	2013		43990	Urbis	Axia 16 LED 350mA	19 Watts	6.00 Metres	Galvanised Steel	
Y	4	STREET LIGHTING	BELVOIR PARK WALK	CLEETHORPES	529912.91	406755.55	1981		43991	Urbis	Axia 16 LED 350mA	19 Watts	5.00 Metres	Galvanised Steel	
Y	5	STREET LIGHTING	BELVOIR PARK WALK	CLEETHORPES	529935.44	406777.96	2007		43992	Urbis	Axia 16 LED 350mA	19 Watts	6.00 Metres	Steel	
Y	6	STREET LIGHTING	BELVOIR PARK WALK	CLEETHORPES	529957.34	406802.13	2007		43993	Urbis	Axia 16 LED 350mA	19 Watts	6.00 Metres	Steel	
Y	7	STREET LIGHTING	BELVOIR PARK WALK	CLEETHORPES	529978.35	406826.13	2010		43994	Urbis	Axia 16 LED 350mA	19 Watts	6.00 Metres	Steel	
Y	8	STREET LIGHTING	BELVOIR PARK WALK	CLEETHORPES	529999.11	406849.48	2023	20/03/2023	69218	Urbis	Axia 16 LED 350mA	19 Watts	6.00 Metres	Steel	
Y	9	STREET LIGHTING	BELVOIR PARK WALK	CLEETHORPES	530021.64	406875.11	2023	20/03/2023	69301	Urbis	Axia 16 LED 350mA	19 Watts	6.00 Metres	Steel	
Y	10	STREET LIGHTING	BELVOIR PARK WALK	CLEETHORPES	530038.23	406909.04	2017	28/07/2017	43997	Urbis	Axia 16 LED 350mA	19 Watts	6.00 Metres	Steel	
Y	11	STREET LIGHTING	BELVOIR PARK WALK	CLEETHORPES	529833.54	406746.37	2017	28/07/2017	43998	Urbis	Axia 16 LED 350mA	19 Watts	5.00 Metres	Galvanised Steel	
Y	12	STREET LIGHTING	BELVOIR PARK WALK	CLEETHORPES	529860.88	406713.71	1995		43999	Urbis	Axia 16 LED 350mA	19 Watts	5.00 Metres	Galvanised Steel	
Y	1	STREET LIGHTING	FOOTPATH BETWEEN QUORN MEWS	CLEETHORPES	530096.33	406996.59	1997		48776	Urbis	Axia 16 LED 350mA	19 Watts	5.00 Metres	Galvanised Steel	
Y	1	STREET LIGHTING	SANDRINGHAM ROAD RECTORY	CLEETHORPES	529529.12	407927.9	1993		56596	1 Urbis LED	Axia 16 LED 500mA	28 Watts	5.00 Metres	Galvanised Steel	
Y	1	STREET LIGHTING	SANDRINGHAM ROAD SHOPS	CLEETHORPES	529440.16	407937.1	2005		56598	1 Urbis LED	Axia 16 LED 500mA	28 Watts	6.00 Metres	Galvanised Steel	
Y	2	STREET LIGHTING	SANDRINGHAM ROAD SHOPS	CLEETHORPES	529444.47	407921.65	2005		56597	1 Urbis LED	Axia 16 LED 500mA	28 Watts	6.00 Metres	Galvanised Steel	
Y	3	STREET LIGHTING	SANDRINGHAM ROAD SHOPS	CLEETHORPES	529420.3	407933.78	2005		56599	1 Urbis LED	Axia 16 LED 500mA	28 Watts	6.00 Metres	Galvanised Steel	
Y	4	STREET LIGHTING	SANDRINGHAM ROAD SHOPS	CLEETHORPES	529425.67	407914.48	2005		56600	1 Urbis LED	Axia 16 LED 500mA	28 Watts	6.00 Metres	Galvanised Steel	
Y	1	STREET LIGHTING			529759	406843	1975		42726	Philips		26 Watts	5.00 Metres	Galvanised Steel	
Y	1	STREET LIGHTING	BEDALE PLACE	CLEETHORPES	530126.47	407133.12	2000		43877	Urbis	Axia 16 LED 350mA	19 Watts	6.00 Metres	Galvanised Steel	
Y	2	STREET LIGHTING	BEDALE PLACE	CLEETHORPES	530114.32	407160.01	2000		43878	Urbis	Axia 16 LED 350mA	19 Watts	6.00 Metres	Galvanised Steel	
Y	3	STREET LIGHTING	BEDALE PLACE	CLEETHORPES	530088.84	407174.43	2000		43879	Urbis	Axia 16 LED 350mA	19 Watts	6.00 Metres	Galvanised Steel	
Y	1	STREET LIGHTING	FERNIE PLACE	CLEETHORPES	530017.52	407118.3	2011		48489	Urbis	Axia 16 LED 350mA	19 Watts	6.00 Metres	Galvanised Steel	
Y	2	STREET LIGHTING	FERNIE PLACE	CLEETHORPES	530000.36	407102.67	2011		48490	Urbis	Axia 16 LED 350mA	19 Watts	6.00 Metres	Galvanised Steel	
Y	3	STREET LIGHTING	FERNIE PLACE	CLEETHORPES	529973.3	407109.24	2011		48491	Urbis	Axia 16 LED 350mA	19 Watts	6.00 Metres	Galvanised Steel	
Y	4	STREET LIGHTING	FERNIE PLACE	CLEETHORPES	529961.21	407128.18	2011		48492	Urbis	Axia 16 LED 350mA	19 Watts	6.00 Metres	Galvanised Steel	
Y	1	STREET LIGHTING	HEYTHROP ROAD	CLEETHORPES	530066.88	407097.1	1997		50661	Urbis	Axia 16 LED 350mA	19 Watts	6.00 Metres	Galvanised Steel	
Y	2	STREET LIGHTING	HEYTHROP ROAD	CLEETHORPES	530053.83	407124.78	2000		50662	Urbis	Axia 16 LED 350mA	19 Watts	6.00 Metres	Galvanised Steel	
Y	3	STREET LIGHTING	HEYTHROP ROAD	CLEETHORPES	530034.75	407140.14	2007		50663	Urbis	Axia 16 LED 350mA	19 Watts	6.00 Metres	Galvanised Steel	
Y	4	STREET LIGHTING	HEYTHROP ROAD	CLEETHORPES	530021.59	407163.85	2007		50664	Urbis	Axia 16 LED 350mA	19 Watts	6.00 Metres	Galvanised Steel	
Y	5	STREET LIGHTING	HEYTHROP ROAD	CLEETHORPES	530028.36	407190.68	2007		50665	Urbis	Axia 16 LED 350mA	19 Watts	6.00 Metres	Galvanised Steel	
Y	6	STREET LIGHTING	HEYTHROP ROAD	CLEETHORPES	530048	407211.9	2007		50666	Urbis	Axia 16 LED 350mA	19 Watts	6.00 Metres	Galvanised Steel	
Y	1	STREET LIGHTING	ARUNDEL PLACE	CLEETHORPES	530295.51	408173.07	2018	13/06/2018	43375	Urbis	Axia 16 LED 350mA	19 Watts	6.00 Metres	Galvanised Steel	
Y	2	STREET LIGHTING	ARUNDEL PLACE	CLEETHORPES	530303.06	408147.31	2018	13/06/2018	67080	Urbis	Axia 16 LED 350mA	19 Watts	6.00 Metres	Galvanised Steel	
Y	3	STREET LIGHTING	ARUNDEL PLACE	CLEETHORPES	530321.15	408129.13	2018	14/08/2018	43376	1 Urbis LED	Teceo 16 LED 500mA	28 Watts	6.00 Metres	Galvanised Steel	
Y	1	STREET LIGHTING	BARK STREET	CLEETHORPES	530928.69	408449.77	1993		43680	Urbis	Axia 16 LED 350mA	19 Watts	6.00 Metres	Galvanised Steel	
Y	2	STREET LIGHTING	BARK STREET	CLEETHORPES	530919.7	408433.57	1993		43681	Urbis	Axia 16 LED 350mA	19 Watts	6.00 Metres	Galvanised Steel	
Y	3	STREET LIGHTING	BARK STREET	CLEETHORPES	530910.71	408415.47	1993		43682	Urbis	Axia 16 LED 350mA	19 Watts	6.00 Metres	Galvanised Steel	
Y	4	STREET LIGHTING	BARK STREET	CLEETHORPES	530894.01	408397.43	1993		43683	Urbis	Axia 16 LED 350mA	19 Watts	6.00 Metres	Galvanised Steel	
Y	5	STREET LIGHTING	BARK STREET	CLEETHORPES	530875.53	408379.52	1993		43684	Urbis	Axia 16 LED 350mA	19 Watts	6.00 Metres	Galvanised Steel	
Y	6	STREET LIGHTING	BARK STREET	CLEETHORPES	530858.19	408362.88	1993		43685	Urbis	Axia 16 LED 350mA	19 Watts	6.00 Metres	Galvanised Steel	
Y	7	STREET LIGHTING	BARK STREET	CLEETHORPES	530845.02	408341.68	1993		43686	Urbis	Axia 16 LED 350mA	19 Watts	6.00 Metres	Galvanised Steel	
Y	1	STREET LIGHTING	BARKHOUSE LANE	CLEETHORPES	530941.49	408377.25	2018	14/09/2018	67125	Urbis	Axia 16 LED 500mA	28 Watts	6.00 Metres	Galvanised Steel	
Y	2	STREET LIGHTING	BARKHOUSE LANE	CLEETHORPES	530975.79	408364.32	2002		43691	1 Urbis LED	Axia 16 LED 500mA	28 Watts	6.00 Metres	Stainless Steel	
Y	3	STREET LIGHTING	BARKHOUSE LANE	CLEETHORPES	530999.33	408348.05	2002		43692	1 Urbis LED	Axia 16 LED 500mA	28 Watts	6.00 Metres	Stainless Steel	
Y	4	STREET LIGHTING	BARKHOUSE LANE	CLEETHORPES	531013.79	408323.39	2002		43693	1 Urbis LED	Axia 16 LED 500mA	28 Watts	6.00 Metres	Stainless Steel	
Y	1	STREET LIGHTING	BRIGHTON STREET	CLEETHORPES	531038.73	408481.51	1992		44707	Urbis	Axia 16 LED 350mA	19 Watts	6.00 Metres	Galvanised Steel	
Y	2	STREET LIGHTING	BRIGHTON STREET	CLEETHORPES	531032.43	408451.84	1992		44708	Urbis	Axia 16 LED 350mA	19 Watts	6.00 Metres	Galvanised Steel	
Y	3	STREET LIGHTING	BRIGHTON STREET	CLEETHORPES	531011.82	408434.28	1992		44709	Urbis	Axia 16 LED 350mA	19 Watts	6.00 Metres	Galvanised Steel	
Y	1	STREET LIGHTING	BROOKLANDS AVENUE	CLEETHORPES	531091.37	408285.49	2002		44871	1 Urbis LED	Axia 16 LED 500mA	28 Watts	5.00 Metres	Steel	
Y	2	STREET LIGHTING	BROOKLANDS AVENUE	CLEETHORPES	531136.18	408248.91	1997		44872	1 Urbis LED	Axia 16 LED 500mA	28 Watts	5.00 Metres	Galvanised Steel	
Y	3	STREET LIGHTING	BROOKLANDS AVENUE	CLEETHORPES	531095.17	408253.09	1997		44873	1 Urbis LED	Axia 16 LED 500mA	28 Watts	5.00 Metres	Galvanised Steel	
Y	4	STREET LIGHTING	BROOKLANDS AVENUE	CLEETHORPES	531080.8	408248.97	2006		44874	1 Urbis LED	Axia 16 LED 500mA	28 Watts	5.00 Metres	Steel	
Y	5	STREET LIGHTING	BROOKLANDS AVENUE	CLEETHORPES	531064.69	408228.36	2006		44875	1 Urbis LED	Axia 16 LED 500mA	28 Watts	5.00 Metres	Steel	
Y	6	STREET LIGHTING	BROOKLANDS AVENUE	CLEETHORPES	531045.7	408216.68	2006		44876	1 Urbis LED	Axia 16 LED 500mA	28 Watts	5.00 Metres	Steel	
Y	7	STREET LIGHTING	BROOKLANDS AVENUE	CLEETHORPES	531024.23	408204.01	2006		44877	1 Urbis LED	Axia 16 LED 500mA	28 Watts	5.00 Metres	Steel	
Y	1	STREET LIGHTING	CAMBRIDGE STREET	CLEETHORPES	530843.71	408458.92	1991		45166	1 Urbis LED	Teceo 40 LED 500mA	64 Watts	8.00 Metres	Galvanised Steel	
Y	2	STREET LIGHTING	CAMBRIDGE STREET	CLEETHORPES	530832.31	408494.74	2001		45167	1 Urbis LED	Teceo 40 LED 500mA	64 Watts	8.00 Metres	Galvanised Steel	
Y	3	STREET LIGHTING	CAMBRIDGE STREET	CLEETHORPES	530815.1	408518.22	1991		45168	1 Urbis LED	Teceo 40 LED 500mA	64 Watts	8.00 Metres	Galvanised Steel	
Y	4	STREET LIGHTING	CAMBRIDGE STREET	CLEETHORPES	530807	408557.08	1991		45169	1 Urbis LED	Teceo 40 LED 500mA	64 Watts	8.00 Metres	Galvanised Steel	
Y	5	STREET LIGHTING	CAMBRIDGE STREET	CLEETHORPES	530793.3	408576.11	1991		45170	Urbis	AXIA 3.2 32 LED 510mA	50 Watts	8.00 Metres	Galvanised Steel	
Y	6	STREET LIGHTING	CAMBRIDGE STREET	CLEETHORPES	530786.09	408558.09	1991		45171	Urbis	AXIA 3.2 32 LED 510mA	50 Watts	8.00 Metres	Galvanised Steel	
Y	7	STREET LIGHTING	CAMBRIDGE STREET	CLEETHORPES	530766.09	408562.9	1991		45172	Urbis	AXIA 3.2 32 LED 510mA	50 Watts	8.00 Metres	Galvanised Steel	
Y	8	STREET LIGHTING	CAMBRIDGE STREET	CLEETHORPES	530759.12	408580.05	1991		45173	1 Urbis LED	Teceo 40 LED 500mA	64 Watts	8.00 Metres	Galvanised Steel	
Y	9	STREET LIGHTING	CAMBRIDGE STREET	CLEETHORPES	530740.01	408569.04	1991		45174	1 Urbis LED	Teceo 40 LED 500mA	64 Watts	8.00 Metres	Galvanised Steel	
Y	10	STREET LIGHTING	CAMBRIDGE STREET	CLEETHORPES	530708.4	408586.94	2010		45175	1 Urbis LED	Teceo 40 LED 500mA	64 Watts	8.00 Metres	Galvanised Steel	
Y	11	STREET LIGHTING	CAMBRIDGE STREET	CLEETHORPES	530687.73	408578.09	1991		45176	1 Urbis LED	Teceo 40 LED 500mA	64 Watts	8.00 Metres	Galvanised Steel	
Y	12	STREET LIGHTING	CAMBRIDGE STREET	CLEETHORPES	530678.18	408597.06	1991		45177	Urbis	AXIA 3.2 32 LED 510mA	50 Watts	8.00 Metres	Galvanised Steel	
Y	13	STREET LIGHTING	CAMBRIDGE STREET	CLEETHORPES	530633.68	408586	1991		45178	1 Urbis LED	Teceo 40 LED 500mA	64 Watts	8.00 Metres	Galvanised Steel	
Y	1	STREET LIGHTING	CHAPMAN GROVE	CLEETHORPES	530600.68	408435.81	2018	04/05/2018	67076	Urbis	Axia 16 LED 350mA	19 Watts	6.00 Metres	Galvanised Steel	
Y	2	STREET LIGHTING	CHAPMAN GROVE	CLEETHORPES	530575.16	408422.48	1937		45620	1 Urbis LED	Axia 16 LED 500mA	28 Watts	5.00 Metres	Cast Iron	
Y	3	STREET LIGHTING	CHAPMAN GROVE	CLEETHORPES	530563.64	408438.36	1937		45621	1 Urbis LED	Axia 16 LED 500mA	28 Watts	5.00 Metres	Cast Iron	
Y	4	STREET LIGHTING	CHAPMAN GROVE	CLEETHORPES	530605.92	408413.03	2018	04/05/2018	67077	Urbis	Axia 16 LED 350mA	19 Watts	6.00 Metres	Galvanised Steel	
Y	5	STREET LIGHTING	CHAPMAN GROVE	CLEETHORPES	530627.69	408398.68	2018	04/05/2018	67078	Urbis	Axia 16 LED 350mA	19 Watts	6.00 Metres	Galvanised Steel	
Y	6	STREET LIGHTING	CHAPMAN GROVE	CLEETHORPES	530634.74	408372.57	2018	04/05/2018	67079	Urbis	Axia 16 LED 350mA	19 Watts	6.00 Metres	Galvanised Steel	
Y	1	STREET LIGHTING	CHARLES STREET	CLEETHORPES	530675.96	408475.54	1966		45659	Urbis	Axia 16 LED 350mA	19 Watts	5.00 Metres	Galvanised Steel	
Y	2	STREET LIGHTING	CHARLES STREET	CLEETHORPES	530647.81	408468.99	1966		45660	Urbis	Axia 16 LED 350mA	19 Watts	5.00 Metres	Galvanised Steel	
Y	3	STREET LIGHTING	CHARLES STREET	CLEETHORPES	530629.97	408444.75	1966		45661	Urbis	Axia 16 LED 350mA	19 Watts	5.00 Metres	Galvanised Steel	
Y	1	STREET LIGHTING	CLUMBER PLACE	CLEETHORPES	530353.3	408209.58	2014		46327	1 Urbis LED	Axia 16 LED 500mA	28 Watts	6.00 Metres	Galvanised Steel	
Y	2	STREET LIGHTING	CLUMBER PLACE	CLEETHORPES	530360.61	408187.36	2018	13/06/2018	67081	Urbis	Axia 16 LED 350mA	19 Watts	6.00 Metres	Galvanised Steel	
Y	3	STREET LIGHTING	CLUMBER PLACE	CLEETHORPES	530378.35	408169.56	2018	13/06/2018	46328	Urbis	Axia 16 LED 350mA	19 Watts	6.00 Metres	Galvanised Steel	
Y	1	STREET LIGHTING	GEORGE STREET	CLEETHORPES	530720.98	408415.84	1995		49183	Urbis	Axia 16 LED 350mA	19 Watts	6.00 Metres	Galvanised Steel	
Y	2	STREET LIGHTING	GEORGE STREET	CLEETHORPES	530706.17	408405.01	1995		49184	Urbis	Axia 16 LED 350mA	19 Watts	6.00 Metres	Galvanised Steel	
Y	3	STREET LIGHTING	GEORGE STREET	CLEETHORPES	530680.85	408400.39	1995		49185	Urbis	Axia 16 LED 350mA	19 Watts	6.00 Metres	Galvanised Steel	
Y	4	STREET LIGHTING	GEORGE STREET	CLEETHORPES	530660.48	408385.77	1995		49186	Urbis	Axia 16 LED 350mA	19 Watts	6.00 Metres	Galvanised Steel	
Y	5	STREET LIGHTING	GEORGE STREET	CLEETHORPES	530647.19	408363.31	1995		49187	Urbis	Axia 16 LED 350mA	19 Watts	6.00 Metres	Galvanised Steel	
Y	6	STREET LIGHTING	GEORGE STREET	CLEETHORPES	530621.62	408357.42	1995		49188	Urbis	Axia 16 LED 350mA	19 Watts	6.00 Metres	Galvanised Steel	
Y	7	STREET LIGHTING	GEORGE STREET	CLEETHORPES	530606.68	408333.82	1995		49189	Urbis	Axia 16 LED 350mA	19 Watts	6.00 Metres	Galvanised Steel	
Y	8	STREET LIGHTING	GEORGE STREET	CLEETHORPES	530581.14	408327.79	1995		49190	Urbis	Axia 16 LED 350mA	19 Watts	6.00 Metres	Galvanised Steel	
Y	9	STREET LIGHTING	GEORGE STREET	CLEETHORPES	530559.62	408312.03	1995		49191	Urbis	Axia 16 LED 350mA	19 Watts	6.00 Metres	Galvanised Steel	
Y	10	STREET LIGHTING	GEORGE STREET	CLEETHORPES	530540.76	408285.77	1995		49192	Urbis	Axia 16 LED 350mA	19 Watts	6.00 Metres	Galvanised Steel	
Y	11	STREET LIGHTING	GEORGE STREET	CLEETHORPES	530512.28	408278.49	1995		49193	Urbis	Axia 16 LED 350mA	19 Watts	6.00 Metres	Galvanised Steel	
Y	12	STREET LIGHTING	GEORGE STREET	CLEETHORPES	530487.35	408260.84	1995		49194	Urbis	Axia 16 LED 350mA	19 Watts	6.00 Metres	Galvanised Steel	
Y	13	STREET LIGHTING	GEORGE STREET	CLEETHORPES	530463.3	408243.43	1995		49195	Urbis	Axia 16 LED 350mA	19 Watts	6.00 Metres	Galvanised Steel	
Y	14	STREET LIGHTING	GEORGE STREET	CLEETHORPES	530443.93	408229.95	1995		49196	Urbis	Axia 16 LED 350mA	19 Watts	6.00 Metres	Galvanised Steel	
Y	1	STREET LIGHTING	HEY STREET	CLEETHORPES	530752.87	408014.14	2008		50657	1 Urbis LED	Axia 16 LED 500mA	28 Watts	6.00 Metres	Steel	
Y	2	STREET LIGHTING	HEY STREET	CLEETHORPES	530727.69	408038.77	2011		50658	1 Urbis LED	Axia 16 LED 500mA	28 Watts	6.00 Metres	Steel	
Y	3	STREET LIGHTING	HEY STREET	CLEETHORPES	530714.56	408063.68	2007		50659	1 Urbis LED	Axia 16 LED 500mA	28 Watts	6.00 Metres	Steel	
Y	4	STREET LIGHTING	HEY STREET	CLEETHORPES	530701.7	408087.77	2007		50660	1 Urbis LED	Axia 16 LED 500mA	28 Watts	6.00 Metres	Steel	
Y	1	STREET LIGHTING	HIGHGATE	CLEETHORPES	530858.56	408455.15	2014		50748	1 Urbis LED	Teceo 40 LED 500mA	64 Watts	6.00 Metres	Galvanised Steel	
Y	2	STREET LIGHTING	HIGHGATE	CLEETHORPES	530854.44	408437.67	2014		50749	1 Urbis LED	Teceo 40 LED 500mA	64 Watts	6.00 Metres	Galvanised Steel	
Y	3	STREET LIGHTING	HIGHGATE	CLEETHORPES	530824.19	408428.49	2015		50750	1 Urbis LED	Teceo 40 LED 500mA	64 Watts	6.00 Metres	Galvanised Steel	
Y	4	STREET LIGHTING	HIGHGATE	CLEETHORPES	530804.57	408408.3	1988		50751	Urbis	AXIA 3.2 32 LED 510mA	50 Watts	8.00 Metres	Galvanised Steel	
Y	5	STREET LIGHTING	HIGHGATE	CLEETHORPES	530796.98	408385.2	1993		50752	1 Urbis LED	Teceo 40 LED 500mA	64 Watts	8.00 Metres	Galvanised Steel	
Y	6	STREET LIGHTING	HIGHGATE	CLEETHORPES	530739.25	408345.45	1994		50753	1 Urbis LED	Teceo 40 LED 500mA	64 Watts	8.00 Metres	Galvanised Steel	
Y	7	STREET LIGHTING	HIGHGATE	CLEETHORPES	530716.47	408323.87	1994		50754	Urbis	AXIA 3.2 32 LED 510mA	50 Watts	8.00 Metres	Galvanised Steel	
Y	8	STREET LIGHTING	HIGHGATE	CLEETHORPES	530690.14	408305.83	1994		50755	1 Urbis LED	Teceo 40 LED 500mA	64 Watts	8.00 Metres	Galvanised Steel	
Y	9	STREET LIGHTING	HIGHGATE	CLEETHORPES	530669	408291.34	1994		50756	Urbis	AXIA 3.2 32 LED 510mA	50 Watts	8.00 Metres	Galvanised Steel	
Y	10	STREET LIGHTING	HIGHGATE	CLEETHORPES	530634.95	408265.39	1994		50757	Urbis	AXIA 3.2 32 LED 510mA	50 Watts	8.00 Metres	Steel	
Y	11	STREET LIGHTING	HIGHGATE	CLEETHORPES	530603.82	408243.53	2021	16/02/2021	68276	Urbis	AXIA 3.2 32 LED 510mA	50 Watts	8.00 Metres	Galvanised Steel	
Y	12	STREET LIGHTING	HIGHGATE	CLEETHORPES	530574.52	408212.97	1994		50759	1 Urbis LED	Teceo 40 LED 500mA	64 Watts	8.00 Metres	Steel	

Y	13	STREET LIGHTING	HIGHGATE	CLEETHORPES	530538.7	408198.22	1994		50760	1 Urbis LED	Teceo 40 LED 500mA	64 Watts	8.00 Metres	Steel	
Y	14	STREET LIGHTING	HIGHGATE	CLEETHORPES	530505.92	408175	1994		50761	1 Urbis LED	Teceo 40 LED 500mA	64 Watts	8.00 Metres	Steel	
Y	15	STREET LIGHTING	HIGHGATE	CLEETHORPES	530484.3	408149.57	1994		50762	Urbis	AXIA 3.2 32 LED 510mA	50 Watts	8.00 Metres	Steel	
Y	16	STREET LIGHTING	HIGHGATE	CLEETHORPES	530446.96	408134	1994		50763	1 Urbis LED	Teceo 40 LED 500mA	64 Watts	8.00 Metres	Steel	
Y	17	STREET LIGHTING	HIGHGATE	CLEETHORPES	530416.58	408112.04	1994		50764	1 Urbis LED	Teceo 40 LED 500mA	64 Watts	8.00 Metres	Steel	
Y	18	STREET LIGHTING	HIGHGATE	CLEETHORPES	530377.47	408108.05	2015	08/07/2015	50765	1 Urbis LED	Teceo 24 LED 500mA	40 Watts	6.00 Metres	Galvanised Steel	
Y	19	STREET LIGHTING	HIGHGATE	CLEETHORPES	530396.57	408085.16	2007		50766	1 Urbis LED	Teceo 40 LED 500mA	64 Watts	8.00 Metres	Steel	
Y	20	STREET LIGHTING	HIGHGATE	CLEETHORPES	530351.27	408063.81	1994		50767	Urbis	AXIA 3.2 32 LED 510mA	50 Watts	8.00 Metres	Steel	
Y	21	STREET LIGHTING	HIGHGATE	CLEETHORPES	530320.25	408039.89	1994		50768	1 Urbis LED	Teceo 40 LED 500mA	64 Watts	8.00 Metres	Steel	
Y	1	STREET LIGHTING	HINKLER STREET	CLEETHORPES	530493.99	408335.08	2018	18/06/2018	50864	Urbis	Teceo 24 LED 500mA	40 Watts	6.00 Metres	Galvanised Steel	
Y	2	STREET LIGHTING	HINKLER STREET	CLEETHORPES	530456.27	408302.33	2018	18/06/2018	50865	Urbis	Teceo 24 LED 500mA	40 Watts	6.00 Metres	Galvanised Steel	
Y	1	STREET LIGHTING	LINDSEY ROAD	CLEETHORPES	530655.35	407906.25	1992		52581	Urbis	Axia 16 LED 350mA	19 Watts	6.00 Metres	Galvanised Steel	
Y	2	STREET LIGHTING	LINDSEY ROAD	CLEETHORPES	530643.83	407932.13	1992		52582	Urbis	Axia 16 LED 350mA	19 Watts	6.00 Metres	Galvanised Steel	
Y	3	STREET LIGHTING	LINDSEY ROAD	CLEETHORPES	530621.42	407943.84	1992		52583	Urbis	Axia 16 LED 350mA	19 Watts	6.00 Metres	Galvanised Steel	
Y	4	STREET LIGHTING	LINDSEY ROAD	CLEETHORPES	530616.48	407969.22	1992		52584	Urbis	Axia 16 LED 350mA	19 Watts	6.00 Metres	Galvanised Steel	
Y	5	STREET LIGHTING	LINDSEY ROAD	CLEETHORPES	530592.81	407983.76	1992		52585	Urbis	Axia 16 LED 350mA	19 Watts	6.00 Metres	Galvanised Steel	
Y	6	STREET LIGHTING	LINDSEY ROAD	CLEETHORPES	530585.09	408012.43	1992		52586	Urbis	Axia 16 LED 350mA	19 Watts	6.00 Metres	Galvanised Steel	
Y	7	STREET LIGHTING	LINDSEY ROAD	CLEETHORPES	530561.84	408028.84	1992		52587	Urbis	Axia 16 LED 350mA	19 Watts	6.00 Metres	Galvanised Steel	
Y	8	STREET LIGHTING	LINDSEY ROAD	CLEETHORPES	530551.33	408057.99	1992		52588	Urbis	Axia 16 LED 350mA	19 Watts	6.00 Metres	Galvanised Steel	
Y	1	STREET LIGHTING	LUDLOW PLACE	CLEETHORPES	530249.26	408190.9	1992		52998	1 Urbis LED	Axia 16 LED 500mA	28 Watts	5.00 Metres	Galvanised Steel	
Y	2	STREET LIGHTING	LUDLOW PLACE	CLEETHORPES	530242.33	408213.85	2020	15/12/2020	68214	Urbis	Axia 24 LED 500mA	28 Watts	6.00 Metres	Galvanised Steel	
Y	1	STREET LIGHTING	MOLLISON AVENUE	CLEETHORPES	530589.75	408341.65	1995		53762	Urbis	Axia 16 LED 350mA	19 Watts	5.00 Metres	Galvanised Steel	
Y	2	STREET LIGHTING	MOLLISON AVENUE	CLEETHORPES	530583.8	408366.65	1995		53763	Urbis	Axia 16 LED 350mA	19 Watts	5.00 Metres	Galvanised Steel	
Y	3	STREET LIGHTING	MOLLISON AVENUE	CLEETHORPES	530566.71	408383.93	1995		53764	Urbis	Axia 16 LED 350mA	19 Watts	5.00 Metres	Galvanised Steel	
Y	1	STREET LIGHTING	NEW ROAD	CLEETHORPES	530873.15	408581.45	2003		54040	Urbis	Axia 16 LED 350mA	19 Watts	5.00 Metres	Stainless Steel	
Y	2	STREET LIGHTING	NEW ROAD	CLEETHORPES	530853.55	408607.98	2003		54041	Urbis	Axia 16 LED 350mA	19 Watts	5.00 Metres	Stainless Steel	
Y	1	STREET LIGHTING	NICHOLSON STREET	CLEETHORPES	530775.25	408156.79	2015	30/07/2015	54186	1 Urbis LED	Axia 16 LED 500mA	28 Watts	6.00 Metres	Galvanised Steel	
Y	2	STREET LIGHTING	NICHOLSON STREET	CLEETHORPES	530812.08	408167.23	2014	15/11/2014	54187	1 Urbis LED	Axia 16 LED 500mA	28 Watts	6.00 Metres	Galvanised Steel	
Y	3	STREET LIGHTING	NICHOLSON STREET	CLEETHORPES	530840.69	408190.33	2015	30/07/2015	54188	1 Urbis LED	Axia 16 LED 500mA	28 Watts	6.00 Metres	Galvanised Steel	
Y	1	STREET LIGHTING	NORTH STREET	CLEETHORPES	530964.85	408516.89	2019	04/02/2019	67275	Urbis	Axia 16 LED 500mA	28 Watts	6.00 Metres	Galvanised Steel	
Y	2	STREET LIGHTING	NORTH STREET	CLEETHORPES	530941.84	408529.61	2019	04/02/2019	67362	Urbis	Axia 16 LED 500mA	28 Watts	6.00 Metres	Galvanised Steel	
Y	3	STREET LIGHTING	NORTH STREET	CLEETHORPES	530958.26	408566.76	2019	04/02/2019	67363	Urbis	Axia 16 LED 500mA	28 Watts	6.00 Metres	Galvanised Steel	
Y	1	STREET LIGHTING	PARKER STREET	CLEETHORPES	530709.35	407975.3	2011		54725	1 Urbis LED	Axia 16 LED 500mA	28 Watts	6.00 Metres	Steel	
Y	2	STREET LIGHTING	PARKER STREET	CLEETHORPES	530676.87	407998.05	2011		54726	1 Urbis LED	Axia 16 LED 500mA	28 Watts	6.00 Metres	Steel	
Y	3	STREET LIGHTING	PARKER STREET	CLEETHORPES	530663.86	408032.83	2011		54727	1 Urbis LED	Axia 16 LED 500mA	28 Watts	6.00 Metres	Steel	
Y	4	STREET LIGHTING	PARKER STREET	CLEETHORPES	530641.86	408045.83	2011		54728	1 Urbis LED	Axia 16 LED 500mA	28 Watts	6.00 Metres	Steel	
Y	5	STREET LIGHTING	PARKER STREET	CLEETHORPES	530626.15	408084.68	2011		54729	1 Urbis LED	Axia 16 LED 500mA	28 Watts	6.00 Metres	Steel	
Y	6	STREET LIGHTING	PARKER STREET	CLEETHORPES	530606.6	408111.68	2011		54730	1 Urbis LED	Axia 16 LED 500mA	28 Watts	6.00 Metres	Steel	
Y	7	STREET LIGHTING	PARKER STREET	CLEETHORPES	530582.02	408128.02	2011		54731	1 Urbis LED	Axia 16 LED 500mA	28 Watts	6.00 Metres	Steel	
Y	1	STREET LIGHTING	ROWSTON STREET	CLEETHORPES	531100.29	408346.82	1985		56361	1 Urbis LED	Axia 16 LED 500mA	28 Watts	5.00 Metres	Galvanised Steel	
Y	2	STREET LIGHTING	ROWSTON STREET	CLEETHORPES	531072.46	408325.04	2016	19/09/2016	56362	1 Urbis LED	Axia 16 LED 500mA	28 Watts	6.00 Metres	Galvanised Steel	
Y	3	STREET LIGHTING	ROWSTON STREET	CLEETHORPES	531044.49	408300.73	2002		56363	1 Urbis LED	Axia 16 LED 500mA	28 Watts	6.00 Metres	Stainless Steel	
Y	4	STREET LIGHTING	ROWSTON STREET	CLEETHORPES	531020.06	408282.39	2016	30/06/2016	56364	1 Urbis LED	Axia 16 LED 500mA	28 Watts	6.00 Metres	Galvanised Steel	
Y	5	STREET LIGHTING	ROWSTON STREET	CLEETHORPES	530993.1	408268.65	2014		56365	1 Urbis LED	Axia 16 LED 500mA	28 Watts	6.00 Metres	Galvanised Steel	
Y	6	STREET LIGHTING	ROWSTON STREET	CLEETHORPES	530978.17	408251.25	2016	30/06/2016	56366	1 Urbis LED	Axia 16 LED 500mA	28 Watts	6.00 Metres	Steel	
Y	1	STREET LIGHTING	SEA VIEW STREET	CLEETHORPES	530925.01	408604.74	2008		56784	Urbis		27 Watts	5.00 Metres	Steel	
Y	2	STREET LIGHTING	SEA VIEW STREET	CLEETHORPES	530907.5	408588.41	2008		56785	Urbis		27 Watts	5.00 Metres	Steel	
Y	3	STREET LIGHTING	SEA VIEW STREET	CLEETHORPES	530891.35	408582.41	2008		56786	Urbis		27 Watts	5.00 Metres	Steel	
Y	4	STREET LIGHTING	SEA VIEW STREET	CLEETHORPES	530872.38	408566.17	2008		56787	Urbis		27 Watts	5.00 Metres	Steel	
Y	5	STREET LIGHTING	SEA VIEW STREET	CLEETHORPES	530859.13	408551.25	2008		56788	Urbis		27 Watts	5.00 Metres	Steel	
Y	6	STREET LIGHTING	SEA VIEW STREET	CLEETHORPES	530840.49	408547.47	2008		62992	Urbis		27 Watts	5.00 Metres	Steel	
Y	7	STREET LIGHTING	SEA VIEW STREET	CLEETHORPES	530826.13	408539.33	2008		62993	Urbis		27 Watts	5.00 Metres	Steel	
Y	8	STREET LIGHTING	SEA VIEW STREET	CLEETHORPES	530797.07	408526.72	1994		56791	Urbis	Axia 16 LED 350mA	19 Watts	6.00 Metres	Galvanised Steel	
Y	9	STREET LIGHTING	SEA VIEW STREET	CLEETHORPES	530771.5	408504.63	1994		56792	Urbis	Axia 16 LED 350mA	19 Watts	6.00 Metres	Galvanised Steel	
Y	10	STREET LIGHTING	SEA VIEW STREET	CLEETHORPES	530738.33	408493.68	1994		56793	Urbis	Axia 16 LED 350mA	19 Watts	6.00 Metres	Galvanised Steel	
Y	11	STREET LIGHTING	SEA VIEW STREET	CLEETHORPES	530716.82	408470.08	1994		56794	Urbis	Axia 16 LED 350mA	19 Watts	6.00 Metres	Galvanised Steel	
Y	1	STREET LIGHTING	SEGMERE STREET	CLEETHORPES	531147.84	408322.79	2005		56880	Urbis	Axia 16 LED 350mA	19 Watts	6.00 Metres	Stainless Steel	
Y	2	STREET LIGHTING	SEGMERE STREET	CLEETHORPES	531130.55	408308.88	2005		56881	Urbis	Axia 16 LED 350mA	19 Watts	6.00 Metres	Stainless Steel	
Y	3	STREET LIGHTING	SEGMERE STREET	CLEETHORPES	531112.56	408296.12	2005		56882	Urbis	Axia 16 LED 350mA	19 Watts	6.00 Metres	Stainless Steel	
Y	1	STREET LIGHTING	SHERBURN STREET	CLEETHORPES	526981.2	409345.06	2018	18/06/2018	67204	Urbis	Ampera 16 LED 500mA	28 Watts	6.00 Metres	Galvanised Steel	
Y	2	STREET LIGHTING	SHERBURN STREET	CLEETHORPES	530693.86	408114.06	1968		57145	1 Urbis LED	Teceo 16 LED 500mA	28 Watts	5.00 Metres	Galvanised Steel	
Y	3	STREET LIGHTING	SHERBURN STREET	CLEETHORPES	530667.21	408084.07	2018	18/06/2018	67205	Urbis	Ampera 16 LED 500mA	28 Watts	6.00 Metres	Galvanised Steel	
Y	4	STREET LIGHTING	SHERBURN STREET	CLEETHORPES	530628.42	408055.39	2018	18/06/2018	67206	Urbis	Ampera 16 LED 500mA	28 Watts	6.00 Metres	Galvanised Steel	
Y	5	STREET LIGHTING	SHERBURN STREET	CLEETHORPES	530496.76	407971.53	2020	05/06/2020	67877	Urbis	Teceo 16 LED 500mA	25 Watts	6.00 Metres	Galvanised Steel	
Y	6	STREET LIGHTING	SHERBURN STREET	CLEETHORPES	530566.39	408009.46	1996		57149	1 Urbis LED	Teceo 16 LED 500mA	28 Watts	6.00 Metres	Galvanised Steel	
Y	7	STREET LIGHTING	SHERBURN STREET	CLEETHORPES	530533.83	407998.63	2018	09/10/2018	57150	Urbis	Teceo 16 LED 500mA	28 Watts	6.00 Metres	Galvanised Steel	
Y	8	STREET LIGHTING	SHERBURN STREET	CLEETHORPES	530496.76	407971.53	2018	18/06/2018	67207	Urbis	Ampera 16 LED 500mA	28 Watts	6.00 Metres	Galvanised Steel	
Y	9	STREET LIGHTING	SHERBURN STREET	CLEETHORPES	530476.82	407955.69	2018	18/06/2018	67208	Urbis	Ampera 16 LED 500mA	28 Watts	6.00 Metres	Galvanised Steel	
Y	10	STREET LIGHTING	SHERBURN STREET	CLEETHORPES	530452.51	407939.57	2018	18/06/2018	67209	Urbis	Ampera 16 LED 500mA	28 Watts	6.00 Metres	Galvanised Steel	
Y	11	STREET LIGHTING	SHERBURN STREET	CLEETHORPES	530420.83	407916.08	2018	18/06/2018	67210	Urbis	Ampera 16 LED 500mA	28 Watts	6.00 Metres	Galvanised Steel	
Y	12	STREET LIGHTING	SHERBURN STREET	CLEETHORPES	530392.42	407896.41	2018	18/06/2018	67211	Urbis	Ampera 16 LED 500mA	28 Watts	6.00 Metres	Galvanised Steel	
Y	1	STREET LIGHTING	SOUTH STREET	CLEETHORPES	530998.86	408476.76	1985		57389	1 Urbis LED	Axia 16 LED 500mA	28 Watts	5.00 Metres	Galvanised Steel	
Y	1	STREET LIGHTING	TRINITY ROAD	CLEETHORPES	530492.31	407745.09	1992		59428	1 Urbis LED	Teceo 24 LED 500mA	40 Watts	8.00 Metres	Galvanised Steel	
Y	2	STREET LIGHTING	TRINITY ROAD	CLEETHORPES	530467.63	407759.33	1992		59429	1 Urbis LED	Teceo 24 LED 500mA	40 Watts	8.00 Metres	Galvanised Steel	
Y	3	STREET LIGHTING	TRINITY ROAD	CLEETHORPES	530451.3	407782.18	1992		59430	1 Urbis LED	Teceo 24 LED 500mA	40 Watts	8.00 Metres	Galvanised Steel	
Y	4	STREET LIGHTING	TRINITY ROAD	CLEETHORPES	530443.32	407814.01	1992		59431	1 Urbis LED	Teceo 24 LED 500mA	40 Watts	8.00 Metres	Galvanised Steel	
Y	5	STREET LIGHTING	TRINITY ROAD	CLEETHORPES	530425.22	407839.39	1992		59432	1 Urbis LED	Teceo 24 LED 500mA	40 Watts	8.00 Metres	Galvanised Steel	
Y	6	STREET LIGHTING	TRINITY ROAD	CLEETHORPES	530408.96	407862.82	1992		59433	1 Urbis LED	Teceo 24 LED 500mA	40 Watts	8.00 Metres	Galvanised Steel	
Y	7	STREET LIGHTING	TRINITY ROAD	CLEETHORPES	530381.24	407881.11	1992		59434	1 Urbis LED	Teceo 24 LED 500mA	40 Watts	8.00 Metres	Galvanised Steel	
Y	8	STREET LIGHTING	TRINITY ROAD	CLEETHORPES	530374.53	407910.8	1992		59435	1 Urbis LED	Teceo 24 LED 500mA	40 Watts	8.00 Metres	Galvanised Steel	
Y	9	STREET LIGHTING	TRINITY ROAD	CLEETHORPES	530348.71	407926.75	1992		59436	1 Urbis LED	Teceo 24 LED 500mA	40 Watts	8.00 Metres	Galvanised Steel	
Y	10	STREET LIGHTING	TRINITY ROAD	CLEETHORPES	530345.3	407953.27	1992		59437	1 Urbis LED	Teceo 24 LED 500mA	40 Watts	8.00 Metres	Galvanised Steel	
Y	11	STREET LIGHTING	TRINITY ROAD	CLEETHORPES	530321.12	407963.96	1999		59438	Urbis	AXIA 3.2 24 LED 540mA	41 Watts	8.00 Metres	Galvanised Steel	
Y	12	STREET LIGHTING	TRINITY ROAD	CLEETHORPES	530318.08	407996.05	1992		59439	1 Urbis LED	Teceo 24 LED 500mA	40 Watts	8.00 Metres	Galvanised Steel	
Y	13	STREET LIGHTING	TRINITY ROAD	CLEETHORPES	530291.16	408016.14	1992		59440	Urbis	AXIA 3.2 32 LED 510mA	50 Watts	8.00 Metres	Galvanised Steel	
Y	14	STREET LIGHTING	TRINITY ROAD	CLEETHORPES	530285.85	408048.54	1991		59441	Urbis	AXIA 3.2 32 LED 510mA	50 Watts	8.00 Metres	Galvanised Steel	
Y	15	STREET LIGHTING	TRINITY ROAD	CLEETHORPES	530256.48	408075.88	1991		59442	1 Urbis LED	Teceo 32 LED 500mA	52 Watts	8.00 Metres	Galvanised Steel	
Y	16	STREET LIGHTING	TRINITY ROAD	CLEETHORPES	530243.82	408114.99	1991		59443	1 Urbis LED	Teceo 32 LED 500mA	52 Watts	8.00 Metres	Galvanised Steel	
Y	17	STREET LIGHTING	TRINITY ROAD	CLEETHORPES	530211.92	408139.61	1991		59444	1 Urbis LED	Teceo 32 LED 500mA	52 Watts	8.00 Metres	Galvanised Steel	
Y	18	STREET LIGHTING	TRINITY ROAD	CLEETHORPES	530199.77	408177.96	1991		59445	1 Urbis LED	Teceo 32 LED 500mA	52 Watts	8.00 Metres	Galvanised Steel	
Y	19	STREET LIGHTING	TRINITY ROAD	CLEETHORPES	530168.51	408202.33	1991		59446	Urbis	AXIA 3.2 24 LED 540mA	41 Watts	8.00 Metres	Galvanised Steel	
Y	20	STREET LIGHTING	TRINITY ROAD	CLEETHORPES	530151.04	408247.7	1991		59447	1 Urbis LED	Teceo 32 LED 500mA	52 Watts	8.00 Metres	Galvanised Steel	
Y	21	STREET LIGHTING	TRINITY ROAD	CLEETHORPES	530115.44	408278.01	1991		59448	1 Urbis LED	Teceo 32 LED 500mA	52 Watts	8.00 Metres	Galvanised Steel	
Y	22	STREET LIGHTING	TRINITY ROAD	CLEETHORPES	530093.16	408312.06	1995		59449	1 Urbis LED	Teceo 32 LED 500mA	52 Watts	8.00 Metres	Galvanised Steel	
Y	1	STREET LIGHTING	WARDALL STREET	CLEETHORPES	530943.71	408577.28	2008		59806	Urbis		27 Watts	5.00 Metres	Steel	
Y	2	STREET LIGHTING	WARDALL STREET	CLEETHORPES	530916.9	408555.41	2008		61947	Urbis		39 Watts	8.00 Metres	Steel	
Y	2	STREET LIGHTING	WARDALL STREET	CLEETHORPES	530916.9	408555.41	2008		62496	Urbis		39 Watts	8.00 Metres	Steel	
Y	3	STREET LIGHTING	WARDALL STREET	CLEETHORPES	530904.35	408545.44	2008		61948	Urbis		39 Watts	8.00 Metres	Steel	
Y	3	STREET LIGHTING	WARDALL STREET	CLEETHORPES	530904.35	408545.44	2008		62497	Urbis		39 Watts	8.00 Metres	Steel	
Y	4	STREET LIGHTING	WARDALL STREET	CLEETHORPES	530885.32	408554.58	2008		59807	Urbis		27 Watts	5.00 Metres	Steel	
Y	5	STREET LIGHTING	WARDALL STREET	CLEETHORPES	530893.71	408531.85	2008		61949	Urbis		39 Watts	8.00 Metres	Steel	
Y	5	STREET LIGHTING	WARDALL STREET	CLEETHORPES	530893.71	408531.85	2008		62498	Urbis		39 Watts	8.00 Metres	Steel	
Y	6	STREET LIGHTING	WARDALL STREET	CLEETHORPES	530871.05	408518.12	2008		61950	Urbis		39 Watts	8.00 Metres	Steel	
Y	6	STREET LIGHTING	WARDALL STREET	CLEETHORPES	530871.05	408518.12	2008		62499	Urbis		39 Watts	8.00 Metres	Steel	
Y	7	STREET LIGHTING	WARDALL STREET	CLEETHORPES	530855.18	408509.72	2008		61951	Urbis		39 Watts	8.00 Metres	Steel	
Y	7	STREET LIGHTING	WARDALL STREET	CLEETHORPES	530855.18	408509.72	2008		62500	Urbis		39 Watts	8.00 Metres	Steel	
Y	8	STREET LIGHTING	WARDALL STREET	CLEETHORPES	530837.42	408511.6	2008		59808	Urbis		27 Watts	5.00 Metres	Steel	
Y	1	STREET LIGHTING	WENDOVER RISE	CLEETHORPES	530601.84	407853.8	2009		60266	1 Urbis LED	Teceo 24 LED 500mA	40 Watts	6.00 Metres	Steel	
Y	2	STREET LIGHTING	WENDOVER RISE	CLEETHORPES	530574.01	407867.54	2009		60267	1 Urbis LED	Teceo 24 LED 500mA	40 Watts	6.00 Metres	Steel	
Y	3	STREET LIGHTING	WENDOVER RISE	CLEETHORPES	530563.42	407900.59	2009		60268	1 Urbis LED	Teceo 24 LED 500mA	40 Watts	6.00 Metres	Steel	

Y	4	STREET LIGHTING	WENDOVER RISE	CLEETHORPES	530537.31	407919.36	2009		60269	1 Urbis LED	Teceo 24 LED 500mA	40 Watts	6.00 Metres	Steel	
Y	5	STREET LIGHTING	WENDOVER RISE	CLEETHORPES	530522.55	407955.59	2009		60270	1 Urbis LED	Teceo 24 LED 500mA	40 Watts	6.00 Metres	Steel	
Y	6	STREET LIGHTING	WENDOVER RISE	CLEETHORPES	530500.62	407984.67	2009		60271	1 Urbis LED	Teceo 24 LED 500mA	40 Watts	6.00 Metres	Steel	
Y	7	STREET LIGHTING	WENDOVER RISE	CLEETHORPES	530482.93	408009.5	2009		60272	1 Urbis LED	Teceo 24 LED 500mA	40 Watts	6.00 Metres	Steel	
Y	8	STREET LIGHTING	WENDOVER RISE	CLEETHORPES	530459.57	408028.99	2009		60273	1 Urbis LED	Teceo 24 LED 500mA	40 Watts	6.00 Metres	Steel	
Y	1	STREET LIGHTING	WEST STREET	CLEETHORPES	530577.99	408500.85	1989		60327	1 Urbis LED	Teceo 24 LED 500mA	40 Watts	5.00 Metres	Galvanised Steel	
Y	2	STREET LIGHTING	WEST STREET	CLEETHORPES	530612.67	408468.32	2014	15/11/2014	60328	1 Urbis LED	Teceo 24 LED 500mA	40 Watts	6.00 Metres	Galvanised Steel	
Y	1	STREET LIGHTING	WHITES ROAD	CLEETHORPES	530776.99	408265.61	2011		60659	1 Urbis LED	Teceo 16 LED 500mA	28 Watts	6.00 Metres	Steel	
Y	2	STREET LIGHTING	WHITES ROAD	CLEETHORPES	530806.59	408255.5	2011		60660	1 Urbis LED	Teceo 16 LED 500mA	28 Watts	6.00 Metres	Steel	
Y	3	STREET LIGHTING	WHITES ROAD	CLEETHORPES	530832.17	408221.49	2011		60661	1 Urbis LED	Teceo 16 LED 500mA	28 Watts	6.00 Metres	Steel	
Y	4	STREET LIGHTING	WHITES ROAD	CLEETHORPES	530869.85	408204.66	2011		60662	1 Urbis LED	Teceo 16 LED 500mA	28 Watts	6.00 Metres	Steel	
Y	5	STREET LIGHTING	WHITES ROAD	CLEETHORPES	530890.95	408173.64	2011		60663	1 Urbis LED	Teceo 16 LED 500mA	28 Watts	6.00 Metres	Steel	
Y	6	STREET LIGHTING	WHITES ROAD	CLEETHORPES	530930.61	408155.95	2011		60664	1 Urbis LED	Teceo 16 LED 500mA	28 Watts	6.00 Metres	Steel	
Y	7	STREET LIGHTING	WHITES ROAD	CLEETHORPES	530943.25	408124.91	2011		60665	1 Urbis LED	Teceo 16 LED 500mA	28 Watts	6.00 Metres	Steel	
Y	1	STREET LIGHTING	WILLIAM STREET	CLEETHORPES	530449	408462.31	1993		60686	1 Urbis LED	Teceo 16 LED 500mA	28 Watts	6.00 Metres	Galvanised Steel	
Y	2	STREET LIGHTING	WILLIAM STREET	CLEETHORPES	530454.57	408437.18	1993		60687	1 Urbis LED	Teceo 16 LED 500mA	28 Watts	6.00 Metres	Galvanised Steel	
Y	3	STREET LIGHTING	WILLIAM STREET	CLEETHORPES	530479.13	408420.85	1993		60688	1 Urbis LED	Teceo 16 LED 500mA	28 Watts	6.00 Metres	Galvanised Steel	
Y	4	STREET LIGHTING	WILLIAM STREET	CLEETHORPES	530482.92	408395.46	1993		60689	1 Urbis LED	Teceo 16 LED 500mA	28 Watts	6.00 Metres	Galvanised Steel	
Y	5	STREET LIGHTING	WILLIAM STREET	CLEETHORPES	530508.49	408375.65	1993		60690	1 Urbis LED	Teceo 16 LED 500mA	28 Watts	6.00 Metres	Galvanised Steel	
Y	6	STREET LIGHTING	WILLIAM STREET	CLEETHORPES	530524.82	408350.9	1993		60691	1 Urbis LED	Teceo 16 LED 500mA	28 Watts	6.00 Metres	Galvanised Steel	
Y	7	STREET LIGHTING	WILLIAM STREET	CLEETHORPES	530528.49	408326.03	1993		60692	1 Urbis LED	Teceo 16 LED 500mA	28 Watts	6.00 Metres	Galvanised Steel	
Y	8	STREET LIGHTING	WILLIAM STREET	CLEETHORPES	530539.75	408309.39	1993		60693	1 Urbis LED	Teceo 16 LED 500mA	28 Watts	6.00 Metres	Galvanised Steel	
Y	9	STREET LIGHTING	WILLIAM STREET	CLEETHORPES	530555.58	408285.78	1993		60694	1 Urbis LED	Teceo 16 LED 500mA	28 Watts	6.00 Metres	Galvanised Steel	
Y	10	STREET LIGHTING	WILLIAM STREET	CLEETHORPES	530580.76	408268.12	1993		60695	1 Urbis LED	Teceo 16 LED 500mA	28 Watts	6.00 Metres	Galvanised Steel	
Y	11	STREET LIGHTING	WILLIAM STREET	CLEETHORPES	530585.96	408241.41	1993		60696	1 Urbis LED	Teceo 16 LED 500mA	28 Watts	6.00 Metres	Galvanised Steel	
Y	1	STREET LIGHTING	WOODSLEY AVENUE	CLEETHORPES	530356.09	408046.07	2018	18/06/2018	67212	Urbis	Ampera 16 LED 500mA	28 Watts	6.00 Metres	Galvanised Steel	
Y	2	STREET LIGHTING	WOODSLEY AVENUE	CLEETHORPES	530383.38	408026.31	2018	18/06/2018	67213	Urbis	Ampera 16 LED 500mA	28 Watts	6.00 Metres	Galvanised Steel	
Y	3	STREET LIGHTING	WOODSLEY AVENUE	CLEETHORPES	530396.53	407990.49	2018	18/06/2018	67214	Urbis	Ampera 16 LED 500mA	28 Watts	6.00 Metres	Galvanised Steel	
Y	4	STREET LIGHTING	WOODSLEY AVENUE	CLEETHORPES	530430.77	407961.54	2018	18/06/2018	67215	Urbis	Ampera 16 LED 500mA	28 Watts	6.00 Metres	Galvanised Steel	
Y	5	STREET LIGHTING	WOODSLEY AVENUE	CLEETHORPES	530431.87	407941.92	1997		61173	1 Urbis LED	Teceo 24 LED 500mA	40 Watts	6.00 Metres	Galvanised Steel	
Y	6	STREET LIGHTING	WOODSLEY AVENUE	CLEETHORPES	530457.31	407908.56	1997		61174	1 Urbis LED	Teceo 24 LED 500mA	40 Watts	5.00 Metres	Galvanised Steel	
Y	7	STREET LIGHTING	WOODSLEY AVENUE	CLEETHORPES	530484.61	407883.59	2018	18/06/2018	67216	Urbis	Ampera 16 LED 500mA	28 Watts	6.00 Metres	Galvanised Steel	
Y	8	STREET LIGHTING	WOODSLEY AVENUE	CLEETHORPES	530499.21	407848.25	1993		61176	1 Urbis LED	Teceo 24 LED 500mA	40 Watts	5.00 Metres	Galvanised Steel	
Y	1	STREET LIGHTING	BARKHOUSE CLOSE	CLEETHORPES	530988.57	408366.18	1980		43687	1 Urbis LED	Axia 16 LED 500mA	28 Watts	5.00 Metres	Galvanised Steel	
Y	2	STREET LIGHTING	BARKHOUSE CLOSE	CLEETHORPES	531003.12	408381.3	2021	01/02/2021	68271	Urbis	Axia 24 LED 500mA	28 Watts	6.00 Metres	Galvanised Steel	
Y	3	STREET LIGHTING	BARKHOUSE CLOSE	CLEETHORPES	530992.01	408388.66	2021	01/02/2021	68449	Urbis	Axia 24 LED 500mA	28 Watts	6.00 Metres	Galvanised Steel	
Y	1	STREET LIGHTING	CORONATION ROAD	CLEETHORPES	530822.7	408380.34	1978		46727	1 Urbis LED	Teceo 32 LED 500mA	52 Watts	8.00 Metres	Galvanised Steel	
Y	2	STREET LIGHTING	CORONATION ROAD	CLEETHORPES	530834.72	408353.99	1978		46728	1 Urbis LED	Teceo 32 LED 500mA	52 Watts	8.00 Metres	Galvanised Steel	
Y	3	STREET LIGHTING	CORONATION ROAD	CLEETHORPES	530811.05	408315.89	2016	30/06/2016	68423	Urbis	Axia 16 LED 500mA	28 Watts	6.00 Metres	Galvanised Steel	
Y	4	STREET LIGHTING	CORONATION ROAD	CLEETHORPES	530797.61	408292.79	2016	30/06/2016	68424	Urbis	Axia 16 LED 500mA	28 Watts	6.00 Metres	Galvanised Steel	
Y	5	STREET LIGHTING	CORONATION ROAD	CLEETHORPES	530767.38	408279.82	2016	30/06/2016	68425	Urbis	Axia 16 LED 500mA	28 Watts	6.00 Metres	Galvanised Steel	
Y	6	STREET LIGHTING	CORONATION ROAD	CLEETHORPES	530742.85	408245.72	2014		46732	1 Urbis LED	Teceo 24 LED 500mA	40 Watts	6.00 Metres	Galvanised Steel	
Y	7	STREET LIGHTING	CORONATION ROAD	CLEETHORPES	530722.76	408226.57	2016	30/06/2016	68426	Urbis	Axia 16 LED 500mA	28 Watts	6.00 Metres	Galvanised Steel	
Y	1	STREET LIGHTING	HAIGH STREET	CLEETHORPES	531157.04	408275.28	1998		50016	Urbis	Axia 16 LED 350mA	19 Watts	5.00 Metres	Galvanised Steel	
Y	1	STREET LIGHTING	OSLEAR CRESCENT	CLEETHORPES	530315.58	408231.48	2014	15/11/2014	54501	1 Urbis LED	Axia 16 LED 500mA	28 Watts	6.00 Metres	Galvanised Steel	
Y	2	STREET LIGHTING	OSLEAR CRESCENT	CLEETHORPES	530298.62	408261.41	2014	15/11/2014	54502	1 Urbis LED	Axia 16 LED 500mA	28 Watts	6.00 Metres	Galvanised Steel	
Y	3	STREET LIGHTING	OSLEAR CRESCENT	CLEETHORPES	530287.73	408272.62	2014	15/11/2014	54503	1 Urbis LED	Axia 16 LED 500mA	28 Watts	6.00 Metres	Galvanised Steel	
Y	4	STREET LIGHTING	OSLEAR CRESCENT	CLEETHORPES	530295.71	408291.1	2014	15/11/2014	54504	1 Urbis LED	Axia 16 LED 500mA	28 Watts	6.00 Metres	Galvanised Steel	
Y	5	STREET LIGHTING	OSLEAR CRESCENT	CLEETHORPES	530315.83	408278.63	2014	15/11/2014	54505	1 Urbis LED	Axia 16 LED 500mA	28 Watts	6.00 Metres	Galvanised Steel	
Y	6	STREET LIGHTING	OSLEAR CRESCENT	CLEETHORPES	530330.64	408305.59	2014	15/11/2014	54506	1 Urbis LED	Axia 16 LED 500mA	28 Watts	6.00 Metres	Galvanised Steel	
Y	7	STREET LIGHTING	OSLEAR CRESCENT	CLEETHORPES	530367.98	408316.67	2014	15/11/2014	54507	1 Urbis LED	Axia 16 LED 500mA	28 Watts	6.00 Metres	Galvanised Steel	
Y	1	STREET LIGHTING	HIGH CLIFF ROAD	CLEETHORPES	530955.16	408611.88	1994		50670	1 Urbis LED	Teceo 48 LED 700mA	104 Watts	10.00 Metres	Galvanised Steel	
Y	2	STREET LIGHTING	HIGH CLIFF ROAD	CLEETHORPES	530978.7	408582.14	1994		50671	1 Urbis LED	Teceo 48 LED 700mA	104 Watts	10.00 Metres	Galvanised Steel	
Y	3	STREET LIGHTING	HIGH CLIFF ROAD	CLEETHORPES	530999.93	408555.89	1994		50672	1 Urbis LED	Teceo 48 LED 700mA	104 Watts	10.00 Metres	Galvanised Steel	
Y	4	STREET LIGHTING	HIGH CLIFF ROAD	CLEETHORPES	531022.96	408529.62	1994		50673	1 Urbis LED	Teceo 48 LED 700mA	104 Watts	10.00 Metres	Galvanised Steel	
Y	5	STREET LIGHTING	HIGH CLIFF ROAD	CLEETHORPES	531036.63	408494.68	1994		50674	1 Urbis LED	Teceo 48 LED 700mA	104 Watts	10.00 Metres	Galvanised Steel	
Y	1	STREET LIGHTING	THRUNSCOE ROAD	CLEETHORPES	530679.69	408276.13	1988		59191	1 Urbis LED	Teceo 24 LED 500mA	40 Watts	8.00 Metres	Galvanised Steel	
Y	2	STREET LIGHTING	THRUNSCOE ROAD	CLEETHORPES	530695.76	408268.47	1994		59192	1 Urbis LED	Teceo 24 LED 500mA	40 Watts	8.00 Metres	Galvanised Steel	
Y	3	STREET LIGHTING	THRUNSCOE ROAD	CLEETHORPES	530701.59	408235.25	1994		59193	1 Urbis LED	Teceo 40 LED 500mA	64 Watts	8.00 Metres	Galvanised Steel	
Y	4	STREET LIGHTING	THRUNSCOE ROAD	CLEETHORPES	530724.88	408213.67	1994		59194	1 Urbis LED	Teceo 24 LED 500mA	40 Watts	8.00 Metres	Galvanised Steel	
Y	5	STREET LIGHTING	THRUNSCOE ROAD	CLEETHORPES	530725.39	408189.94	1994		59195	1 Urbis LED	Teceo 24 LED 500mA	40 Watts	8.00 Metres	Galvanised Steel	
Y	6	STREET LIGHTING	THRUNSCOE ROAD	CLEETHORPES	530748.55	408169.12	1994		59196	1 Urbis LED	Teceo 24 LED 500mA	40 Watts	8.00 Metres	Galvanised Steel	
Y	7	STREET LIGHTING	THRUNSCOE ROAD	CLEETHORPES	530754.88	408134.31	1994		59197	1 Urbis LED	Teceo 24 LED 500mA	40 Watts	8.00 Metres	Galvanised Steel	
Y	8	STREET LIGHTING	THRUNSCOE ROAD	CLEETHORPES	530778.17	408113.11	1994		59198	1 Urbis LED	Teceo 24 LED 500mA	40 Watts	8.00 Metres	Galvanised Steel	
Y	9	STREET LIGHTING	THRUNSCOE ROAD	CLEETHORPES	530790.95	408089	1994		59199	1 Urbis LED	Teceo 24 LED 500mA	40 Watts	8.00 Metres	Galvanised Steel	
Y	10	STREET LIGHTING	THRUNSCOE ROAD	CLEETHORPES	530804.63	408063.05	1994		59200	1 Urbis LED	Teceo 24 LED 500mA	40 Watts	8.00 Metres	Galvanised Steel	
Y	1	STREET LIGHTING	RICHMOND ROAD	CLEETHORPES	530469.41	408161.84	2018	13/06/2018	67082	Urbis	Ampera 16 LED 500mA	28 Watts	6.00 Metres	Galvanised Steel	
Y	2	STREET LIGHTING	RICHMOND ROAD	CLEETHORPES	530461.56	408191.36	2018	13/06/2018	67083	Urbis	Ampera 16 LED 500mA	28 Watts	6.00 Metres	Galvanised Steel	
Y	3	STREET LIGHTING	RICHMOND ROAD	CLEETHORPES	530431.86	408215.23	2018	13/06/2018	67084	Urbis	Ampera 16 LED 500mA	28 Watts	6.00 Metres	Galvanised Steel	
Y	4	STREET LIGHTING	RICHMOND ROAD	CLEETHORPES	530422.56	408246.67	2018	13/06/2018	67085	Urbis	Ampera 16 LED 500mA	28 Watts	6.00 Metres	Galvanised Steel	
Y	5	STREET LIGHTING	RICHMOND ROAD	CLEETHORPES	530403.34	408270.54	2018	13/06/2018	67086	Urbis	Ampera 16 LED 500mA	28 Watts	6.00 Metres	Galvanised Steel	
Y	6	STREET LIGHTING	RICHMOND ROAD	CLEETHORPES	530372.08	408243.21	2018	13/06/2018	67087	Urbis	Ampera 16 LED 500mA	28 Watts	6.00 Metres	Galvanised Steel	
Y	7	STREET LIGHTING	RICHMOND ROAD	CLEETHORPES	530335.83	408228.37	2015		56100	1 Urbis LED	Teceo 16 LED 500mA	28 Watts	6.00 Metres	Galvanised Steel	
Y	8	STREET LIGHTING	RICHMOND ROAD	CLEETHORPES	530321.06	408207.31	2018	13/06/2018	67088	Urbis	Ampera 16 LED 500mA	28 Watts	6.00 Metres	Galvanised Steel	
Y	9	STREET LIGHTING	RICHMOND ROAD	CLEETHORPES	530278.51	408190.18	2018	13/06/2018	67089	Urbis	Ampera 16 LED 500mA	28 Watts	6.00 Metres	Galvanised Steel	
Y	10	STREET LIGHTING	RICHMOND ROAD	CLEETHORPES	530264.21	408167.41	2018	13/06/2018	67090	Urbis	Ampera 16 LED 500mA	28 Watts	6.00 Metres	Galvanised Steel	
Y	11	STREET LIGHTING	RICHMOND ROAD	CLEETHORPES	530227.48	408154.64	2018	13/06/2018	67091	Urbis	Ampera 16 LED 500mA	28 Watts	6.00 Metres	Galvanised Steel	
Y	1	STREET LIGHTING	OXFORD STREET	CLEETHORPES	530800.6	408356.11	1989		54528	Urbis	AXIA 3.2 32 LED 510mA	50 Watts	8.00 Metres	Galvanised Steel	
Y	2	STREET LIGHTING	OXFORD STREET	CLEETHORPES	530823.38	408338.77	1998		54529	Urbis	AXIA 3.2 32 LED 510mA	50 Watts	8.00 Metres	Galvanised Steel	
Y	3	STREET LIGHTING	OXFORD STREET	CLEETHORPES	530846.21	408307.54	1998		54530	Urbis	AXIA 3.2 32 LED 510mA	50 Watts	8.00 Metres	Galvanised Steel	
Y	4	STREET LIGHTING	OXFORD STREET	CLEETHORPES	530877.99	408282.67	1998		54531	Urbis	AXIA 3.2 32 LED 510mA	50 Watts	8.00 Metres	Galvanised Steel	
Y	5	STREET LIGHTING	OXFORD STREET	CLEETHORPES	530915.58	408266.79	1998		54532	1 Urbis LED	Teceo 40 LED 500mA	64 Watts	8.00 Metres	Galvanised Steel	
Y	6	STREET LIGHTING	OXFORD STREET	CLEETHORPES	530941.53	408232.17	1998		54533	Urbis	AXIA 3.2 32 LED 510mA	50 Watts	8.00 Metres	Galvanised Steel	
Y	7	STREET LIGHTING	OXFORD STREET	CLEETHORPES	530979.5	408216.28	1998		54534	1 Urbis LED	Teceo 40 LED 500mA	64 Watts	8.00 Metres	Galvanised Steel	
Y	8	STREET LIGHTING	OXFORD STREET	CLEETHORPES	531004.31	408187.54	1998		54535	1 Urbis LED	Teceo 40 LED 500mA	64 Watts	8.00 Metres	Galvanised Steel	
Y	9	STREET LIGHTING	OXFORD STREET	CLEETHORPES	531020.11	408149.1	1989		54536	Urbis	AXIA 3.2 32 LED 510mA	50 Watts	10.00 Metres	Galvanised Steel	
Y	10	STREET LIGHTING	OXFORD STREET	CLEETHORPES	531018.21	408125.82	1992		54537	Urbis	AXIA 3.2 24 LED 540mA	41 Watts	10.00 Metres	Galvanised Steel	
Y	11	STREET LIGHTING	OXFORD STREET	CLEETHORPES	531042.01	408098.03	1998		54538	1 Urbis LED	Teceo 32 LED 500mA	52 Watts	8.00 Metres	Galvanised Steel	
Y	12	STREET LIGHTING	OXFORD STREET	CLEETHORPES	531041	408072.97	1998		54539	1 Urbis LED	Teceo 32 LED 500mA	52 Watts	8.00 Metres	Galvanised Steel	
Y	13	STREET LIGHTING	OXFORD STREET	CLEETHORPES	531063.27	408047.09	1998		54540	Urbis	AXIA 3.2 24 LED 540mA	41 Watts	8.00 Metres	Galvanised Steel	
Y	14	STREET LIGHTING	OXFORD STREET	CLEETHORPES	531070.99	408002.98	1998		54541	Urbis	AXIA 3.2 24 LED 540mA	41 Watts	8.00 Metres	Galvanised Steel	
Y	15	STREET LIGHTING	OXFORD STREET	CLEETHORPES	531095.37	407971.77	1998		54542	1 Urbis LED	Teceo 32 LED 500mA	52 Watts	8.00 Metres	Galvanised Steel	
Y	16	STREET LIGHTING	OXFORD STREET	CLEETHORPES	531102.59	407929.5	1998		54543	1 Urbis LED	Teceo 32 LED 500mA	52 Watts	8.00 Metres	Galvanised Steel	
Y	17	STREET LIGHTING	OXFORD STREET	CLEETHORPES	531124.87	407902.98	1998		54544	1 Urbis LED	Teceo 32 LED 500mA	52 Watts	8.00 Metres	Galvanised Steel	
Y	18	STREET LIGHTING	OXFORD STREET	CLEETHORPES	531137.65	407878.74	1998		54545	1 Urbis LED	Teceo 32 LED 500mA	52 Watts	8.00 Metres	Galvanised Steel	
Y	19	STREET LIGHTING	OXFORD STREET	CLEETHORPES	531132.71	407852.85	1998		54546	1 Urbis LED	Teceo 32 LED 500mA	52 Watts	8.00 Metres	Galvanised Steel	
Y	1	STREET LIGHTING	HUMBER STREET	CLEETHORPES	530984.76	408528.94	2015	30/07/2015	51036	1 Urbis LED	Axia 16 LED 500mA	28 Watts	6.00 Metres	Galvanised Steel	
Y	2	STREET LIGHTING	HUMBER STREET	CLEETHORPES	530968.81	408498.5	2010	06/08/2010	51037	1 Urbis LED	Axia 16 LED 500mA	28 Watts	6.00 Metres	Galvanised Steel	
Y	3	STREET LIGHTING	HUMBER STREET	CLEETHORPES	530935.01	408470.4	2013		51038	1 Urbis LED	Axia 16 LED 500mA	28 Watts	6.00 Metres	Galvanised Steel	
Y	4	STREET LIGHTING	HUMBER STREET	CLEETHORPES	530910.33	408456.79	1990		51039	1 Urbis LED	Teceo 40 LED 500mA	64 Watts	6.00 Metres	Galvanised Steel	
Y	5	STREET LIGHTING	HUMBER STREET	CLEETHORPES	530884.63	408457.62	2015	30/07/2015	51040	1 Urbis LED	Axia 16 LED 500mA	28 Watts	6.00 Metres	Galvanised Steel	
Y	1	STREET LIGHTING	HOPE STREET	CLEETHORPES	531008.53	408418.59	1992		50998	Urbis	Axia 16 LED 350mA	19 Watts	5.00 Metres	Galvanised Steel	
Y	2	STREET LIGHTING	HOPE STREET	CLEETHORPES	531039.29	408397.83	1992		50999	Urbis	Axia 16 LED 350mA	19 Watts	5.00 Metres	Galvanised Steel	
Y	3	STREET LIGHTING	HOPE STREET	CLEETHORPES	531071.41	408384.09	1992		51000	Urbis	Axia 16 LED 350mA	19 Watts	5.00 Metres	Galvanised Steel	
Y	4	STREET LIGHTING	HOPE STREET	CLEETHORPES	531087.03	408358.94	1992		51001	Urbis	Axia 16 LED 350mA	19 Watts	5.00 Metres	Galvanised Steel	
Y	1	STREET LIGHTING	EDWARD STREET	CLEETHORPES	530467.73	408404.83	1996		47855	Urbis	Axia 16 LED 350mA	19 Watts	6.00 Metres	Galvanised Steel	
Y	2	STREET LIGHTING	EDWARD STREET	CLEETHORPES	530445.2	408389.07	1996		47856	Urbis	Axia 16 LED 350mA	19 Watts	6.00 Metres	Galvanised Steel	
Y	3	STREET LIGHTING	EDWARD STREET	CLEETHORPES	530431.15	408366.86	1996		47857	Urbis	Axia 16 LED 350mA	19 Watts	6.00 Metres	Galvanised Steel	
Y	4	STREET LIGHTING	EDWARD STREET	CLEETHORPES	530406.85	408362.62	1996		47858	Urbis	Axia 16 LED 350mA	19 Watts	6.00 Metres	Galvanised Steel	
Y	5	STREET LIGHTING	EDWARD STREET	CLEETHORPES	530381.03	408362.56	1996		47859	Urbis	Axia 16 LED 350mA	19 Watts	6.00 Metres	Galvanised Steel	

Y	6	STREET LIGHTING	EDWARD STREET	CLEETHORPES	530394.7	408340.21	1996		47860	Urbis	Axia 16 LED 350mA	19 Watts	6.00 Metres	Galvanised Steel	
Y	1	STREET LIGHTING	WINN COURT	CLEETHORPES	530290.01	408245.47	2014	15/11/2014	60926	Urbis	Axia 16 LED 350mA	19 Watts	6.00 Metres	Galvanised Steel	
Y	2	STREET LIGHTING	WINN COURT	CLEETHORPES	530280.52	408260.72	2014	15/11/2014	60927	Urbis	Axia 16 LED 350mA	19 Watts	6.00 Metres	Galvanised Steel	
Y	3	STREET LIGHTING	WINN COURT	CLEETHORPES	530270.52	408253.13	2014	15/11/2014	60928	Urbis	Axia 16 LED 350mA	19 Watts	6.00 Metres	Galvanised Steel	
Y	4	STREET LIGHTING	WINN COURT	CLEETHORPES	530269.13	408235.73	2014	15/11/2014	60929	Urbis	Axia 8 LED 350mA	10 Watts	6.00 Metres	Galvanised Steel	
Y	5	STREET LIGHTING	WINN COURT	CLEETHORPES	530260.9	408255.16	2013		60930	Urbis	Axia 8 LED 350mA	10 Watts	6.00 Metres	Steel	
Y	6	STREET LIGHTING	WINN COURT	CLEETHORPES	530242.8	408282.05	2013		60931	Urbis	Axia 8 LED 350mA	10 Watts	6.00 Metres	Steel	
Y	7	STREET LIGHTING	WINN COURT	CLEETHORPES	530265.08	408275.09	2013		60932	Urbis	Axia 8 LED 350mA	10 Watts	6.00 Metres	Steel	
Y	1	STREET LIGHTING	2ND AVENUE	HUMBERSTON	533284.23	405782.72	2008		42618	DW Windsor	Henley 15 LED	30 Watts	5.00 Metres	Steel	
Y	2	STREET LIGHTING	2ND AVENUE	HUMBERSTON	533263.33	405766.35	2008		42619	DW Windsor	Henley 15 LED	30 Watts	5.00 Metres	Steel	
Y	3	STREET LIGHTING	2ND AVENUE	HUMBERSTON	533248.63	405774.17	2008		42620	DW Windsor	Henley 15 LED	30 Watts	5.00 Metres	Steel	
Y	4	STREET LIGHTING	2ND AVENUE	HUMBERSTON	533232.64	405799.15	2008		42621	DW Windsor	Henley 15 LED	30 Watts	5.00 Metres	Steel	
Y	5	STREET LIGHTING	2ND AVENUE	HUMBERSTON	533218.36	405821.5	2008		42622	DW Windsor	Henley 15 LED	30 Watts	5.00 Metres	Steel	
Y	6	STREET LIGHTING	2ND AVENUE	HUMBERSTON	533201.7	405844.64	2008		42623	DW Windsor	Henley 15 LED	30 Watts	5.00 Metres	Steel	
Y	7	STREET LIGHTING	2ND AVENUE	HUMBERSTON	533185.41	405870.38	2008		42624	DW Windsor	Henley 15 LED	30 Watts	5.00 Metres	Steel	
Y	8	STREET LIGHTING	2ND AVENUE	HUMBERSTON	533171.89	405889.53	2008		42625	DW Windsor	Henley 15 LED	30 Watts	5.00 Metres	Steel	
Y	9	STREET LIGHTING	2ND AVENUE	HUMBERSTON	533159.04	405910.78	2008		42626	DW Windsor	Henley 15 LED	30 Watts	5.00 Metres	Steel	
Y	10	STREET LIGHTING	2ND AVENUE	HUMBERSTON	533140.74	405932.81	2008		42627	DW Windsor	Henley 15 LED	30 Watts	5.00 Metres	Steel	
Y	11	STREET LIGHTING	2ND AVENUE	HUMBERSTON	533126.18	405960.38	2008		42628	DW Windsor	Henley 15 LED	30 Watts	5.00 Metres	Steel	
Y	1	STREET LIGHTING	2ND MAIN ROAD	HUMBERSTON	533397.02	405685.6	2006		42629	DW Windsor	Henley 15 LED	30 Watts	5.00 Metres	Steel	
Y	2	STREET LIGHTING	2ND MAIN ROAD	HUMBERSTON	533366.56	405662.9	2006		42630	DW Windsor	Henley 15 LED	30 Watts	5.00 Metres	Steel	
Y	3	STREET LIGHTING	2ND MAIN ROAD	HUMBERSTON	533327.88	405647.59	2006		42631	DW Windsor	Henley 15 LED	30 Watts	5.00 Metres	Steel	
Y	4	STREET LIGHTING	2ND MAIN ROAD	HUMBERSTON	533350.65	405646	2006		42632	DW Windsor	Henley 15 LED	30 Watts	5.00 Metres	Steel	
Y	5	STREET LIGHTING	2ND MAIN ROAD	HUMBERSTON	533365.72	405613.22	2006		42633	DW Windsor	Henley 15 LED	30 Watts	5.00 Metres	Steel	
Y	6	STREET LIGHTING	2ND MAIN ROAD	HUMBERSTON	533376.87	405585.27	2006		42634	DW Windsor	Henley 15 LED	30 Watts	5.00 Metres	Steel	
Y	7	STREET LIGHTING	2ND MAIN ROAD	HUMBERSTON	533381.87	405556.62	2006		42635	DW Windsor	Henley 15 LED	30 Watts	5.00 Metres	Steel	
Y	8	STREET LIGHTING	2ND MAIN ROAD	HUMBERSTON	533371.63	405537.46	2006		42636	DW Windsor	Henley 15 LED	30 Watts	5.00 Metres	Steel	
Y	9	STREET LIGHTING	2ND MAIN ROAD	HUMBERSTON	533337.51	405535.75	2006		42637	DW Windsor	Henley 15 LED	30 Watts	5.00 Metres	Steel	
Y	10	STREET LIGHTING	2ND MAIN ROAD	HUMBERSTON	533380.97	405522.67	2006		42638	DW Windsor	Henley 15 LED	30 Watts	5.00 Metres	Steel	
Y	11	STREET LIGHTING	2ND MAIN ROAD	HUMBERSTON	533376.02	405498.53	2006		42639	DW Windsor	Henley 15 LED	30 Watts	5.00 Metres	Steel	
Y	12	STREET LIGHTING	2ND MAIN ROAD	HUMBERSTON	533367.33	405466.78	2006		42640	DW Windsor	Henley 15 LED	30 Watts	5.00 Metres	Steel	
Y	13	STREET LIGHTING	2ND MAIN ROAD	HUMBERSTON	533364.26	405437.27	2006		42641	DW Windsor	Henley 15 LED	30 Watts	5.00 Metres	Steel	
Y	1	STREET LIGHTING	1ST MAIN ROAD	HUMBERSTON	533113.7	405974.21	1970		42572	1 Urbis LED	Teceo 32 LED 500mA	52 Watts	8.00 Metres	Galvanised Steel	
Y	2	STREET LIGHTING	1ST MAIN ROAD	HUMBERSTON	533144.65	405986.48	2015		42573	1 Urbis LED	Teceo 32 LED 500mA	52 Watts	8.00 Metres	Galvanised Steel	
Y	3	STREET LIGHTING	1ST MAIN ROAD	HUMBERSTON	533172.51	405993.44	1970		42574	1 Urbis LED	Teceo 32 LED 500mA	52 Watts	8.00 Metres	Galvanised Steel	
Y	4	STREET LIGHTING	1ST MAIN ROAD	HUMBERSTON	533191.07	405973.31	1970		42575	1 Urbis LED	Teceo 32 LED 500mA	52 Watts	8.00 Metres	Galvanised Steel	
Y	5	STREET LIGHTING	1ST MAIN ROAD	HUMBERSTON	533217.16	405945.72	1970		42576	1 Urbis LED	Teceo 32 LED 500mA	52 Watts	8.00 Metres	Galvanised Steel	
Y	6	STREET LIGHTING	1ST MAIN ROAD	HUMBERSTON	533247.39	405957.16	1970		42577	1 Urbis LED	Teceo 32 LED 500mA	52 Watts	8.00 Metres	Galvanised Steel	
Y	7	STREET LIGHTING	1ST MAIN ROAD	HUMBERSTON	533275.6	405938.54	1970		42578	1 Urbis LED	Teceo 32 LED 500mA	52 Watts	8.00 Metres	Galvanised Steel	
Y	8	STREET LIGHTING	1ST MAIN ROAD	HUMBERSTON	533296.99	405907.99	1970		42579	1 Urbis LED	Teceo 32 LED 500mA	52 Watts	8.00 Metres	Galvanised Steel	
Y	9	STREET LIGHTING	1ST MAIN ROAD	HUMBERSTON	533318.27	405878.61	1970		42580	1 Urbis LED	Teceo 32 LED 500mA	52 Watts	8.00 Metres	Galvanised Steel	
Y	10	STREET LIGHTING	1ST MAIN ROAD	HUMBERSTON	533341.17	405847.67	1970		42581	1 Urbis LED	Teceo 32 LED 500mA	52 Watts	8.00 Metres	Galvanised Steel	
Y	11	STREET LIGHTING	1ST MAIN ROAD	HUMBERSTON	533357.82	405815.25	1970		42582	1 Urbis LED	Teceo 32 LED 500mA	52 Watts	8.00 Metres	Galvanised Steel	
Y	12	STREET LIGHTING	1ST MAIN ROAD	HUMBERSTON	533345.68	405789.45	1970		42583	1 Urbis LED	Teceo 32 LED 500mA	52 Watts	8.00 Metres	Galvanised Steel	
Y	13	STREET LIGHTING	1ST MAIN ROAD	HUMBERSTON	533317	405778.83	1970		42584	1 Urbis LED	Teceo 32 LED 500mA	52 Watts	8.00 Metres	Galvanised Steel	
Y	14	STREET LIGHTING	1ST MAIN ROAD	HUMBERSTON	533286.36	405796.58	1970		42585	1 Urbis LED	Teceo 32 LED 500mA	52 Watts	8.00 Metres	Galvanised Steel	
Y	15	STREET LIGHTING	1ST MAIN ROAD	HUMBERSTON	533268.35	405821.55	1970		42586	1 Urbis LED	Teceo 32 LED 500mA	52 Watts	8.00 Metres	Galvanised Steel	
Y	16	STREET LIGHTING	1ST MAIN ROAD	HUMBERSTON	533246.76	405850.02	1970		42587	1 Urbis LED	Teceo 32 LED 500mA	52 Watts	8.00 Metres	Galvanised Steel	
Y	17	STREET LIGHTING	1ST MAIN ROAD	HUMBERSTON	533224.15	405880.14	1970		42588	1 Urbis LED	Teceo 32 LED 500mA	52 Watts	8.00 Metres	Galvanised Steel	
Y	18	STREET LIGHTING	1ST MAIN ROAD	HUMBERSTON	533204.08	405908.8	1970		42589	1 Urbis LED	Teceo 32 LED 500mA	52 Watts	8.00 Metres	Galvanised Steel	
Y	19	STREET LIGHTING	1ST MAIN ROAD	HUMBERSTON	533353.19	405770.49	2006		42590	DW Windsor	Henley 15 LED	30 Watts	5.00 Metres	Steel	
Y	20	STREET LIGHTING	1ST MAIN ROAD	HUMBERSTON	533373.95	405742.87	2006		42591	DW Windsor	Henley 15 LED	30 Watts	5.00 Metres	Steel	
Y	21	STREET LIGHTING	1ST MAIN ROAD	HUMBERSTON	533390.18	405721.21	2006		42592	DW Windsor	Henley 15 LED	30 Watts	5.00 Metres	Steel	
Y	22	STREET LIGHTING	1ST MAIN ROAD	HUMBERSTON	533412.94	405704.32	2006		42593	DW Windsor	Henley 15 LED	30 Watts	5.00 Metres	Steel	
Y	23	STREET LIGHTING	1ST MAIN ROAD	HUMBERSTON	533430.14	405673.6	2006		42594	DW Windsor	Henley 15 LED	30 Watts	5.00 Metres	Steel	
Y	24	STREET LIGHTING	1ST MAIN ROAD	HUMBERSTON	533448.64	405645.92	2006		42595	DW Windsor	Henley 15 LED	30 Watts	5.00 Metres	Steel	
Y	25	STREET LIGHTING	1ST MAIN ROAD	HUMBERSTON	533466.95	405618.12	2006		42596	DW Windsor	Henley 15 LED	30 Watts	5.00 Metres	Steel	
Y	26	STREET LIGHTING	1ST MAIN ROAD	HUMBERSTON	533482.04	405590.6	2006		42597	DW Windsor	Henley 15 LED	30 Watts	5.00 Metres	Steel	
Y	27	STREET LIGHTING	1ST MAIN ROAD	HUMBERSTON	533492.3	405560.45	2006		42598	DW Windsor	Henley 15 LED	30 Watts	5.00 Metres	Steel	
Y	28	STREET LIGHTING	1ST MAIN ROAD	HUMBERSTON	533504.43	405528.46	2006		42599	DW Windsor	Henley 15 LED	30 Watts	5.00 Metres	Steel	
Y	29	STREET LIGHTING	1ST MAIN ROAD	HUMBERSTON	533515.05	405493.91	2006		42600	DW Windsor	Henley 15 LED	30 Watts	5.00 Metres	Steel	
Y	30	STREET LIGHTING	1ST MAIN ROAD	HUMBERSTON	533528.07	405459.07	2006		42601	DW Windsor	Henley 15 LED	30 Watts	5.00 Metres	Steel	
Y	31	STREET LIGHTING	1ST MAIN ROAD	HUMBERSTON	533537.59	405430.31	2006		42602	DW Windsor	Henley 15 LED	30 Watts	5.00 Metres	Steel	
Y	32	STREET LIGHTING	1ST MAIN ROAD	HUMBERSTON	533554.57	405400.51	2006		42603	DW Windsor	Henley 15 LED	30 Watts	5.00 Metres	Steel	
Y	33	STREET LIGHTING	1ST MAIN ROAD	HUMBERSTON	533527.78	405383.82	2006		42604	DW Windsor	Henley 15 LED	30 Watts	5.00 Metres	Steel	
Y	34	STREET LIGHTING	1ST MAIN ROAD	HUMBERSTON	533558.62	405368.6	2006		42605	DW Windsor	Henley 15 LED	30 Watts	5.00 Metres	Steel	
Y	35	STREET LIGHTING	1ST MAIN ROAD	HUMBERSTON	533569.27	405337.72	2006		42606	DW Windsor	Henley 15 LED	30 Watts	5.00 Metres	Steel	
Y	36	STREET LIGHTING	1ST MAIN ROAD	HUMBERSTON	533580.16	405309.83	2006		42607	DW Windsor	Henley 15 LED	30 Watts	5.00 Metres	Steel	
Y	37	STREET LIGHTING	1ST MAIN ROAD	HUMBERSTON	533592.92	405280.92	2006		42608	DW Windsor	Henley 15 LED	30 Watts	5.00 Metres	Steel	
Y	38	STREET LIGHTING	1ST MAIN ROAD	HUMBERSTON	533616.11	405255.56	2006		42609	DW Windsor	Henley 15 LED	30 Watts	5.00 Metres	Steel	
Y	39	STREET LIGHTING	1ST MAIN ROAD	HUMBERSTON	533624.25	405227	2006		42610	DW Windsor	Henley 15 LED	30 Watts	5.00 Metres	Steel	
Y	40	STREET LIGHTING	1ST MAIN ROAD	HUMBERSTON	533636.86	405194.58	2006		42611	DW Windsor	Henley 15 LED	30 Watts	5.00 Metres	Steel	
Y	41	STREET LIGHTING	1ST MAIN ROAD	HUMBERSTON	533646.27	405168.3	2006		42612	DW Windsor	Henley 15 LED	30 Watts	5.00 Metres	Steel	
Y	42	STREET LIGHTING	1ST MAIN ROAD	HUMBERSTON	533656.32	405135.3	2006		42613	DW Windsor	Henley 15 LED	30 Watts	5.00 Metres	Steel	
Y	43	STREET LIGHTING	1ST MAIN ROAD	HUMBERSTON	533664.38	405109.4	2006		42614	DW Windsor	Henley 15 LED	30 Watts	5.00 Metres	Steel	
Y	44	STREET LIGHTING	1ST MAIN ROAD	HUMBERSTON	533676.24	405073.92	2006		42615	DW Windsor	Henley 15 LED	30 Watts	5.00 Metres	Steel	
Y	45	STREET LIGHTING	1ST MAIN ROAD	HUMBERSTON	533652.13	405069.39	2006		42616	DW Windsor	Henley 15 LED	30 Watts	5.00 Metres	Steel	
Y	46	STREET LIGHTING	1ST MAIN ROAD	HUMBERSTON	533620.3	405067.99	2006		42617	DW Windsor	Henley 15 LED	30 Watts	5.00 Metres	Steel	
Y	1	STREET LIGHTING	GLEBE CLOSE	HUMBERSTON	530799.55	405054.76	2009		49275	Urbis	Axia 16 LED 350mA	19 Watts	6.00 Metres	Steel	
Y	2	STREET LIGHTING	GLEBE CLOSE	HUMBERSTON	530822.04	405058.78	2009		49276	Urbis	Axia 16 LED 350mA	19 Watts	6.00 Metres	Steel	
Y	3	STREET LIGHTING	GLEBE CLOSE	HUMBERSTON	530849.51	405063.72	2009		49277	Urbis	Axia 16 LED 350mA	19 Watts	6.00 Metres	Steel	
Y	4	STREET LIGHTING	GLEBE CLOSE	HUMBERSTON	530865.66	405075.35	2009		49278	Urbis	Axia 16 LED 350mA	19 Watts	6.00 Metres	Steel	
Y	1	STREET LIGHTING	LIME GROVE	HUMBERSTON	530943.07	404883.45	1993		52537	1 Urbis LED	Axia 16 LED 500mA	28 Watts	6.00 Metres	Galvanised Steel	
Y	2	STREET LIGHTING	LIME GROVE	HUMBERSTON	530914.59	404886.17	1993		52538	1 Urbis LED	Axia 16 LED 500mA	28 Watts	6.00 Metres	Galvanised Steel	
Y	3	STREET LIGHTING	LIME GROVE	HUMBERSTON	530884.21	404881.05	1993		52539	1 Urbis LED	Axia 16 LED 500mA	28 Watts	6.00 Metres	Galvanised Steel	
Y	4	STREET LIGHTING	LIME GROVE	HUMBERSTON	530857.12	404876.36	1993		52540	1 Urbis LED	Axia 16 LED 500mA	28 Watts	6.00 Metres	Galvanised Steel	
Y	5	STREET LIGHTING	LIME GROVE	HUMBERSTON	530833.71	404865.03	1993		52541	1 Urbis LED	Axia 16 LED 500mA	28 Watts	6.00 Metres	Galvanised Steel	
Y	6	STREET LIGHTING	LIME GROVE	HUMBERSTON	530831.17	404844.15	1993		52542	1 Urbis LED	Axia 16 LED 500mA	28 Watts	6.00 Metres	Galvanised Steel	
Y	7	STREET LIGHTING	LIME GROVE	HUMBERSTON	530816.62	404866.18	1993		52543	1 Urbis LED	Axia 16 LED 500mA	28 Watts	6.00 Metres	Galvanised Steel	
Y	8	STREET LIGHTING	LIME GROVE	HUMBERSTON	530811.68	404898.84	1993		52544	1 Urbis LED	Axia 16 LED 500mA	28 Watts	6.00 Metres	Galvanised Steel	
Y	9	STREET LIGHTING	LIME GROVE	HUMBERSTON	530812.7	404934.79	1993		52545	1 Urbis LED	Axia 16 LED 500mA	28 Watts	6.00 Metres	Galvanised Steel	
Y	1	STREET LIGHTING	LONSDALE CLOSE	HUMBERSTON	530967.15	404994.17	2002		52767	Urbis	Axia 16 LED 350mA	19 Watts	5.00 Metres	Stainless Steel	
Y	2	STREET LIGHTING	LONSDALE CLOSE	HUMBERSTON	530994.53	404996.99	2002		52768	Urbis	Axia 16 LED 350mA	19 Watts	5.00 Metres	Stainless Steel	
Y	3	STREET LIGHTING	LONSDALE CLOSE	HUMBERSTON	531015.72	405003.08	2003		52769	Urbis	Axia 16 LED 350mA	19 Watts	5.00 Metres	Stainless Steel	
Y	1	STREET LIGHTING	SOUTH SEA LANE	HUMBERSTON	531016.51	404789.16	2014		57382	1 Urbis LED	Axia 16 LED 500mA	28 Watts	6.00 Metres	Galvanised Steel	
Y	2	STREET LIGHTING	SOUTH SEA LANE	HUMBERSTON	531061.77	404789.65	2014		57383	1 Urbis LED	Axia 16 LED 500mA	28 Watts	6.00 Metres	Galvanised Steel	
Y	3	STREET LIGHTING	SOUTH SEA LANE	HUMBERSTON	531103.29	404808.6	2014		57384	1 Urbis LED	Axia 16 LED 500mA	28 Watts	6.00 Metres	Galvanised Steel	
Y	4	STREET LIGHTING	SOUTH SEA LANE	HUMBERSTON	531154.13	404812.35	2014		57385	1 Urbis LED	Axia 16 LED 500mA	28 Watts	6.00 Metres	Galvanised Steel	
Y	5	STREET LIGHTING	SOUTH SEA LANE	HUMBERSTON	531201.11	404811.57	2024	06/08/2024	69966	Urbis	Axia 16 LED 350mA	19 Watts	6.00 Metres	Galvanised Steel	
Y	1	STREET LIGHTING	WALK LANE	HUMBERSTON	530948.69	404766.7	2014	29/08/2014	59699	1 Urbis LED	Axia 16 LED 500mA	28 Watts	6.00 Metres	Galvanised Steel	
Y	2	STREET LIGHTING	WALK LANE	HUMBERSTON	530905.53	404747.78	2014	29/08/2014	59700	1 Urbis LED	Axia 16 LED 500mA	28 Watts	6.00 Metres	Galvanised Steel	
Y	3	STREET LIGHTING	WALK LANE	HUMBERSTON	530865.1	404741.38	2012	27/12/2012	68516	Urbis	Axia 16 LED 500mA	28 Watts	6.00 Metres	Galvanised Steel	
Y	4	STREET LIGHTING	WALK LANE	HUMBERSTON	530821.36	404733.54	2014	29/08/2014	59702	1 Urbis LED	Axia 16 LED 500mA	28 Watts	6.00 Metres	Galvanised Steel	
Y	1	STREET LIGHTING	GLEBE ROAD	HUMBERSTON	530799.15	404960.92	2014		49289	1 Urbis LED	Axia 16 LED 500mA	28 Watts	6.00 Metres	Galvanised Steel	
Y	2	STREET LIGHTING	GLEBE ROAD	HUMBERSTON	530802.44	404990.86			49290	1 Urbis LED	Axia 16 LED 500mA	28 Watts	6.00 Metres	Galvanised Steel	
Y	3	STREET LIGHTING	GLEBE ROAD	HUMBERSTON	530788.22	405018.97	2014		49291	1 Urbis LED	Axia 16 LED 500mA	28 Watts	6.00 Metres	Galvanised Steel	
Y	4	STREET LIGHTING	GLEBE ROAD	HUMBERSTON	530783.66	405047.44	2014		49292	1 Urbis LED	Axia 16 LED 500mA	28 Watts	6.00 Metres	Galvanised Steel	
Y	5	STREET LIGHTING	GLEBE ROAD	HUMBERSTON	530776.95	405083.39	2014		49293	1 Urbis LED	Axia 16 LED 500mA	28 Watts	6.00 Metres	Galvanised Steel	
Y	6	STREET LIGHTING	GLEBE ROAD	HUMBERSTON	530772.77	405111.43	1963		49294	1 Urbis LED	Axia 16 LED 500mA	28 Watts	5.00 Metres	Concrete	
Y	7	STREET LIGHTING	GLEBE ROAD	HUMBERSTON	530757.92	405133.26	1963		49295	1 Urbis LED	Axia 16 LED 500mA	28 Watts	5.00 Metres	Galvanised Steel	

Y	8	STREET LIGHTING	GLEBE ROAD	HUMBERSTON	530800.45	405133.51	2014		49296	1 Urbis LED	Axia 16 LED 500mA	28 Watts	6.00 Metres	Galvanised Steel	
Y	9	STREET LIGHTING	GLEBE ROAD	HUMBERSTON	530827.92	405123.96	2014		49297	1 Urbis LED	Axia 16 LED 500mA	28 Watts	6.00 Metres	Galvanised Steel	
Y	10	STREET LIGHTING	GLEBE ROAD	HUMBERSTON	530854.63	405135.54	2014		49298	1 Urbis LED	Axia 16 LED 500mA	28 Watts	6.00 Metres	Galvanised Steel	
Y	11	STREET LIGHTING	GLEBE ROAD	HUMBERSTON	530881.08	405130.15	2014		49299	1 Urbis LED	Axia 16 LED 500mA	28 Watts	6.00 Metres	Galvanised Steel	
Y	12	STREET LIGHTING	GLEBE ROAD	HUMBERSTON	530915.77	405137.05	1998		49300	1 Urbis LED	Axia 16 LED 500mA	28 Watts	6.00 Metres	Galvanised Steel	
Y	1	STREET LIGHTING	TETNEY ROAD	HUMBERSTON	530922.61	405235.84	1998		58862	1 Urbis LED	Teceo 48 LED 700mA	104 Watts	10.00 Metres	Galvanised Steel	
Y	2	STREET LIGHTING	TETNEY ROAD	HUMBERSTON	530918.36	405209.62	1998		58863	1 Urbis LED	Teceo 48 LED 700mA	104 Watts	10.00 Metres	Galvanised Steel	
Y	3	STREET LIGHTING	TETNEY ROAD	HUMBERSTON	530921.63	405177.48	1998		58864	1 Urbis LED	Teceo 40 LED 500mA	64 Watts	8.00 Metres	Galvanised Steel	
Y	4	STREET LIGHTING	TETNEY ROAD	HUMBERSTON	530936.46	405143.99	1997		58865	Urbis	AXIA 3.2 32 LED 510mA	50 Watts	8.00 Metres	Galvanised Steel	
Y	5	STREET LIGHTING	TETNEY ROAD	HUMBERSTON	530928.15	405116.55	1997		58866	1 Urbis LED	Teceo 40 LED 500mA	64 Watts	8.00 Metres	Galvanised Steel	
Y	6	STREET LIGHTING	TETNEY ROAD	HUMBERSTON	530942.53	405083.03	1990		58867	Urbis	AXIA 3.2 32 LED 510mA	50 Watts	8.00 Metres	Galvanised Steel	
Y	7	STREET LIGHTING	TETNEY ROAD	HUMBERSTON	530936.43	405044.39	1997		58868	1 Urbis LED	Teceo 40 LED 500mA	64 Watts	8.00 Metres	Galvanised Steel	
Y	8	STREET LIGHTING	TETNEY ROAD	HUMBERSTON	530948.96	405015.46	2012	01/10/2012	58869	Urbis	AXIA 3.2 32 LED 510mA	50 Watts	8.00 Metres	Galvanised Steel	
Y	9	STREET LIGHTING	TETNEY ROAD	HUMBERSTON	530942.89	404983.69	1997		58870	Urbis	AXIA 3.2 32 LED 510mA	50 Watts	8.00 Metres	Galvanised Steel	
Y	10	STREET LIGHTING	TETNEY ROAD	HUMBERSTON	530955.93	404953.96	1997		58871	Urbis	AXIA 3.2 32 LED 510mA	50 Watts	8.00 Metres	Galvanised Steel	
Y	11	STREET LIGHTING	TETNEY ROAD	HUMBERSTON	530950.1	404919.83	1997		58872	1 Urbis LED	Teceo 40 LED 500mA	64 Watts	8.00 Metres	Galvanised Steel	
Y	12	STREET LIGHTING	TETNEY ROAD	HUMBERSTON	530963.83	404892.12	1997		58873	1 Urbis LED	Teceo 40 LED 500mA	64 Watts	8.00 Metres	Galvanised Steel	
Y	13	STREET LIGHTING	TETNEY ROAD	HUMBERSTON	530957.5	404850.88	1997		58874	1 Urbis LED	Teceo 40 LED 500mA	64 Watts	8.00 Metres	Galvanised Steel	
Y	14	STREET LIGHTING	TETNEY ROAD	HUMBERSTON	530972.31	404815.31	1997		58875	Urbis	AXIA 3.2 32 LED 510mA	50 Watts	8.00 Metres	Galvanised Steel	
Y	15	STREET LIGHTING	TETNEY ROAD	HUMBERSTON	530965.35	404778.35	1997		58876	Urbis	AXIA 3.2 32 LED 510mA	50 Watts	8.00 Metres	Galvanised Steel	
Y	16	STREET LIGHTING	TETNEY ROAD	HUMBERSTON	530981.25	404747.14	1997		58877	1 Urbis LED	Teceo 40 LED 500mA	64 Watts	8.00 Metres	Galvanised Steel	
Y	17	STREET LIGHTING	TETNEY ROAD	HUMBERSTON	530979.53	404717.73	2016	01/10/2016	58878	Urbis	AXIA 3.2 32 LED 510mA	50 Watts	8.00 Metres	Galvanised Steel	
Y	18	STREET LIGHTING	TETNEY ROAD	HUMBERSTON	530996.74	404684.73	1997		58879	Urbis	AXIA 3.2 32 LED 510mA	50 Watts	8.00 Metres	Galvanised Steel	
Y	19	STREET LIGHTING	TETNEY ROAD	HUMBERSTON	530994.72	404648.58	1997		58880	1 Urbis LED	Teceo 48 LED 700mA	104 Watts	8.00 Metres	Galvanised Steel	
Y	20	STREET LIGHTING	TETNEY ROAD	HUMBERSTON	531013.96	404616.08	1997		58881	1 Urbis LED	Teceo 40 LED 500mA	64 Watts	8.00 Metres	Galvanised Steel	
Y	21	STREET LIGHTING	TETNEY ROAD	HUMBERSTON	531021.83	404582.2	2007		58882	1 Urbis LED	Teceo 40 LED 500mA	64 Watts	8.00 Metres	Steel	
Y	22	STREET LIGHTING	TETNEY ROAD	HUMBERSTON	531032.19	404549.5	2020	26/11/2020	68207	Urbis	Ampera 48 LED 700mA	104 Watts	8.00 Metres	Galvanised Steel	
Y	23	STREET LIGHTING	TETNEY ROAD	HUMBERSTON	531038.18	404514.74	2003		58884	1 Urbis LED	Teceo 40 LED 500mA	64 Watts	8.00 Metres	Stainless Steel	
Y	24	STREET LIGHTING	TETNEY ROAD	HUMBERSTON	531039.78	404481.91	2003		58885	1 Urbis LED	Teceo 40 LED 500mA	64 Watts	8.00 Metres	Stainless Steel	
Y	25	STREET LIGHTING	TETNEY ROAD	HUMBERSTON	531027.01	404449.44	2003		58886	1 Urbis LED	Teceo 40 LED 500mA	64 Watts	8.00 Metres	Stainless Steel	
Y	26	STREET LIGHTING	TETNEY ROAD	HUMBERSTON	530996.34	404433.89	2021	16/12/2021	68784	Urbis	mpera Maxi 128 LED 700m	277 Watts	8.00 Metres	Galvanised Steel	
Y	27	STREET LIGHTING	TETNEY ROAD	HUMBERSTON	530969.12	404409.05	2003		58888	1 Urbis LED	Teceo 40 LED 500mA	64 Watts	8.00 Metres	Stainless Steel	
Y	28	STREET LIGHTING	TETNEY ROAD	HUMBERSTON	530954.28	404375.06	2003		58889	1 Urbis LED	Teceo 40 LED 500mA	64 Watts	8.00 Metres	Stainless Steel	
Y	29	STREET LIGHTING	TETNEY ROAD	HUMBERSTON	530950.82	404342.2	2003		58890	1 Urbis LED	Teceo 40 LED 500mA	64 Watts	8.00 Metres	Stainless Steel	
Y	1	STREET LIGHTING	ADLARD GROVE	HUMBERSTON	530821.43	404931.94	1994		42751	Urbis	Axia 16 LED 350mA	19 Watts	5.00 Metres	Galvanised Steel	
Y	2	STREET LIGHTING	ADLARD GROVE	HUMBERSTON	530841.3	404927.07	1994		42752	Urbis	Axia 16 LED 350mA	19 Watts	5.00 Metres	Galvanised Steel	
Y	3	STREET LIGHTING	ADLARD GROVE	HUMBERSTON	530864.09	404937.64	1994		42753	Urbis	Axia 16 LED 350mA	19 Watts	5.00 Metres	Galvanised Steel	
Y	4	STREET LIGHTING	ADLARD GROVE	HUMBERSTON	530870.29	404957.76	1994		42754	Urbis	Axia 16 LED 350mA	19 Watts	5.00 Metres	Galvanised Steel	
Y	5	STREET LIGHTING	ADLARD GROVE	HUMBERSTON	530852.69	404978.08	1994		42755	Urbis	Axia 16 LED 350mA	19 Watts	5.00 Metres	Galvanised Steel	
Y	6	STREET LIGHTING	ADLARD GROVE	HUMBERSTON	530849.28	405001.05	1994		42756	Urbis	Axia 16 LED 350mA	19 Watts	5.00 Metres	Galvanised Steel	
Y	7	STREET LIGHTING	ADLARD GROVE	HUMBERSTON	530861.81	405001.75	1994		42757	Urbis	Axia 16 LED 350mA	19 Watts	5.00 Metres	Galvanised Steel	
Y	1	STREET LIGHTING	FOOTPATH BETWEEN GLEBE ROAD	HUMBERSTON	530731.8	405207.9	2010		48721	Urbis	Axia 16 LED 350mA	19 Watts	6.00 Metres	Galvanised Steel	
Y	2	STREET LIGHTING	FOOTPATH BETWEEN GLEBE ROAD	HUMBERSTON	530736.6	405182.1	2010		48722	Urbis	Axia 16 LED 350mA	19 Watts	6.00 Metres	Galvanised Steel	
Y	3	STREET LIGHTING	FOOTPATH BETWEEN GLEBE ROAD	HUMBERSTON	530745.4	405154.2	2010		48723	Urbis	Axia 16 LED 350mA	19 Watts	6.00 Metres	Galvanised Steel	
Y	1	STREET LIGHTING	GLEBE ROAD THE ELMS	HUMBERSTON	530854.81	405096.8	1999		49301	1 Urbis LED	Axia 16 LED 500mA	28 Watts	6.00 Metres	Galvanised Steel	
Y	2	STREET LIGHTING	GLEBE ROAD THE ELMS	HUMBERSTON	530834.43	405086.43	1999		49302	1 Urbis LED	Axia 16 LED 500mA	28 Watts	6.00 Metres	Galvanised Steel	
Y	3	STREET LIGHTING	GLEBE ROAD THE ELMS	HUMBERSTON	530812.78	405083.96	1999		49303	1 Urbis LED	Axia 16 LED 500mA	28 Watts	6.00 Metres	Galvanised Steel	
Y	1	STREET LIGHTING	BUTTERMERE CRESCENT	HUMBERSTON	530441.22	405905.88	1999		45021	1 Urbis LED	Axia 16 LED 500mA	28 Watts	6.00 Metres	Galvanised Steel	
Y	2	STREET LIGHTING	BUTTERMERE CRESCENT	HUMBERSTON	530442.36	405945.94	2014		45022	1 Urbis LED	Axia 16 LED 500mA	28 Watts	6.00 Metres	Steel	
Y	3	STREET LIGHTING	BUTTERMERE CRESCENT	HUMBERSTON	530421.61	405985.99	2014		45023	1 Urbis LED	Axia 16 LED 500mA	28 Watts	6.00 Metres	Steel	
Y	4	STREET LIGHTING	BUTTERMERE CRESCENT	HUMBERSTON	530389.71	405997.83	2014		45024	1 Urbis LED	Axia 16 LED 500mA	28 Watts	6.00 Metres	Steel	
Y	5	STREET LIGHTING	BUTTERMERE CRESCENT	HUMBERSTON	530359.96	405979.73	2014		45025	1 Urbis LED	Axia 16 LED 500mA	28 Watts	6.00 Metres	Steel	
Y	6	STREET LIGHTING	BUTTERMERE CRESCENT	HUMBERSTON	530356.04	405930.24	2014		45026	1 Urbis LED	Axia 16 LED 500mA	28 Watts	6.00 Metres	Steel	
Y	7	STREET LIGHTING	BUTTERMERE CRESCENT	HUMBERSTON	530361.74	405896.44	1999		45027	1 Urbis LED	Axia 16 LED 500mA	28 Watts	6.00 Metres	Galvanised Steel	
Y	1	STREET LIGHTING	CONISTON CRESCENT	HUMBERSTON	530153.84	406094.19	2014		46544	1 Urbis LED	Axia 16 LED 500mA	28 Watts	6.00 Metres	Steel	
Y	2	STREET LIGHTING	CONISTON CRESCENT	HUMBERSTON	530123.58	406079.57	2014		46545	1 Urbis LED	Axia 16 LED 500mA	28 Watts	6.00 Metres	Steel	
Y	3	STREET LIGHTING	CONISTON CRESCENT	HUMBERSTON	530125.73	406054.76	2014		46546	1 Urbis LED	Axia 16 LED 500mA	28 Watts	6.00 Metres	Steel	
Y	4	STREET LIGHTING	CONISTON CRESCENT	HUMBERSTON	530121.81	406006.93	2014		46547	1 Urbis LED	Axia 16 LED 500mA	28 Watts	6.00 Metres	Steel	
Y	5	STREET LIGHTING	CONISTON CRESCENT	HUMBERSTON	530142.18	405961.64	2014		46548	1 Urbis LED	Axia 16 LED 500mA	28 Watts	6.00 Metres	Steel	
Y	6	STREET LIGHTING	CONISTON CRESCENT	HUMBERSTON	530142.05	405921.7	2014		46549	1 Urbis LED	Axia 16 LED 500mA	28 Watts	6.00 Metres	Steel	
Y	7	STREET LIGHTING	CONISTON CRESCENT	HUMBERSTON	530164.45	405868.63	2014		46550	1 Urbis LED	Axia 16 LED 500mA	28 Watts	6.00 Metres	Steel	
Y	8	STREET LIGHTING	CONISTON CRESCENT	HUMBERSTON	530164.96	405824.32	2014		46551	1 Urbis LED	Axia 16 LED 500mA	28 Watts	6.00 Metres	Steel	
Y	9	STREET LIGHTING	CONISTON CRESCENT	HUMBERSTON	530197.24	405843.63	2014		46552	1 Urbis LED	Axia 16 LED 500mA	28 Watts	6.00 Metres	Steel	
Y	10	STREET LIGHTING	CONISTON CRESCENT	HUMBERSTON	530242.3	405856.47	1963		46553	1 Urbis LED	Axia 16 LED 500mA	28 Watts	6.00 Metres	Steel	
Y	11	STREET LIGHTING	CONISTON CRESCENT	HUMBERSTON	530297.87	405861.66	2014		46554	1 Urbis LED	Axia 16 LED 500mA	28 Watts	6.00 Metres	Steel	
Y	12	STREET LIGHTING	CONISTON CRESCENT	HUMBERSTON	530334.83	405880.84	1955		46555	1 Urbis LED	Axia 16 LED 500mA	28 Watts	6.00 Metres	Galvanised Steel	
Y	13	STREET LIGHTING	CONISTON CRESCENT	HUMBERSTON	530372.04	405875.52	2014		46556	1 Urbis LED	Axia 16 LED 500mA	28 Watts	6.00 Metres	Steel	
Y	14	STREET LIGHTING	CONISTON CRESCENT	HUMBERSTON	530400.31	405875.64	1999		46557	1 Urbis LED	Axia 16 LED 500mA	28 Watts	6.00 Metres	Galvanised Steel	
Y	15	STREET LIGHTING	CONISTON CRESCENT	HUMBERSTON	530428.54	405893.04	2014		46558	1 Urbis LED	Axia 16 LED 500mA	28 Watts	6.00 Metres	Steel	
Y	16	STREET LIGHTING	CONISTON CRESCENT	HUMBERSTON	530455.88	405890.7	2014		46559	1 Urbis LED	Axia 16 LED 500mA	28 Watts	6.00 Metres	Steel	
Y	17	STREET LIGHTING	CONISTON CRESCENT	HUMBERSTON	530485.25	405903.67	2014		46560	1 Urbis LED	Axia 16 LED 500mA	28 Watts	6.00 Metres	Steel	
Y	18	STREET LIGHTING	CONISTON CRESCENT	HUMBERSTON	530498.92	405932.22	2014		46561	1 Urbis LED	Axia 16 LED 500mA	28 Watts	6.00 Metres	Steel	
Y	19	STREET LIGHTING	CONISTON CRESCENT	HUMBERSTON	530518.79	405971.46	1999		46562	1 Urbis LED	Axia 16 LED 500mA	28 Watts	6.00 Metres	Galvanised Steel	
Y	20	STREET LIGHTING	CONISTON CRESCENT	HUMBERSTON	530516.38	405998.29	2014		46563	1 Urbis LED	Axia 16 LED 500mA	28 Watts	6.00 Metres	Steel	
Y	21	STREET LIGHTING	CONISTON CRESCENT	HUMBERSTON	530540.18	406025.82	2014		46564	1 Urbis LED	Axia 16 LED 500mA	28 Watts	6.00 Metres	Steel	
Y	1	STREET LIGHTING	DERWENT DRIVE	HUMBERSTON	530258.87	406176.8	2014		47451	1 Urbis LED	Axia 16 LED 500mA	28 Watts	6.00 Metres	Steel	
Y	2	STREET LIGHTING	DERWENT DRIVE	HUMBERSTON	530246.08	406153.76	2014		47452	1 Urbis LED	Axia 16 LED 500mA	28 Watts	6.00 Metres	Steel	
Y	3	STREET LIGHTING	DERWENT DRIVE	HUMBERSTON	530244.94	406114.65	2014		47453	1 Urbis LED	Axia 16 LED 500mA	28 Watts	6.00 Metres	Steel	
Y	4	STREET LIGHTING	DERWENT DRIVE	HUMBERSTON	530245.58	406074.02	2013	30/04/2013	47454	1 Urbis LED	Axia 16 LED 500mA	28 Watts	6.00 Metres	Steel	
Y	5	STREET LIGHTING	DERWENT DRIVE	HUMBERSTON	530268.87	406036.39	2014		47455	1 Urbis LED	Axia 16 LED 500mA	28 Watts	6.00 Metres	Steel	
Y	6	STREET LIGHTING	DERWENT DRIVE	HUMBERSTON	530269	405993.48	2014		47456	1 Urbis LED	Axia 16 LED 500mA	28 Watts	6.00 Metres	Steel	
Y	7	STREET LIGHTING	DERWENT DRIVE	HUMBERSTON	530284.06	405954.31	2014		47457	1 Urbis LED	Axia 16 LED 500mA	28 Watts	6.00 Metres	Steel	
Y	8	STREET LIGHTING	DERWENT DRIVE	HUMBERSTON	530283.43	405904.32	2014		47458	1 Urbis LED	Axia 16 LED 500mA	28 Watts	6.00 Metres	Steel	
Y	1	STREET LIGHTING	LITTLE BECK ROAD	HUMBERSTON	530584.74	405937.09	2014		52637	1 Urbis LED	Axia 16 LED 500mA	28 Watts	6.00 Metres	Galvanised Steel	
Y	2	STREET LIGHTING	LITTLE BECK ROAD	HUMBERSTON	530549.68	405926.52	1964		52638	1 Urbis LED	Axia 16 LED 500mA	28 Watts	5.00 Metres	Galvanised Steel	
Y	3	STREET LIGHTING	LITTLE BECK ROAD	HUMBERSTON	530521.83	405931.97	2014		52639	1 Urbis LED	Axia 16 LED 500mA	28 Watts	6.00 Metres	Galvanised Steel	
Y	1	STREET LIGHTING	ST CHRISTOPHERS ROAD	HUMBERSTON	530903.49	405556.81	2014		57631	1 Urbis LED	Axia 16 LED 500mA	28 Watts	6.00 Metres	Galvanised Steel	
Y	2	STREET LIGHTING	ST CHRISTOPHERS ROAD	HUMBERSTON	530864.76	405546.5	2014	29/08/2014	57632	1 Urbis LED	Axia 16 LED 500mA	28 Watts	6.00 Metres	Galvanised Steel	
Y	3	STREET LIGHTING	ST CHRISTOPHERS ROAD	HUMBERSTON	530814	405532.32	2014	29/08/2014	57633	1 Urbis LED	Axia 16 LED 500mA	28 Watts	6.00 Metres	Galvanised Steel	
Y	4	STREET LIGHTING	ST CHRISTOPHERS ROAD	HUMBERSTON	530760.25	405521.75	2014	29/08/2014	57634	1 Urbis LED	Axia 16 LED 500mA	28 Watts	6.00 Metres	Galvanised Steel	
Y	5	STREET LIGHTING	ST CHRISTOPHERS ROAD	HUMBERSTON	530706.6	405508.5	2002	18/11/2002	57635	1 Urbis LED	Axia 16 LED 500mA	28 Watts	6.00 Metres	Galvanised Steel	
Y	6	STREET LIGHTING	ST CHRISTOPHERS ROAD	HUMBERSTON	530675.07	405519.21	2014	29/08/2014	57636	1 Urbis LED	Axia 16 LED 500mA	28 Watts	6.00 Metres	Galvanised Steel	
Y	7	STREET LIGHTING	ST CHRISTOPHERS ROAD	HUMBERSTON	530660.26	405549.09	1967		57637	1 Urbis LED	Axia 16 LED 500mA	28 Watts	6.00 Metres	Galvanised Steel	
Y	8	STREET LIGHTING	ST CHRISTOPHERS ROAD	HUMBERSTON	530658.99	405589.97	2014	29/08/2014	57638	1 Urbis LED	Axia 16 LED 500mA	28 Watts	6.00 Metres	Galvanised Steel	
Y	9	STREET LIGHTING	ST CHRISTOPHERS ROAD	HUMBERSTON	530649.75	405633.3	2014	29/08/2014	57639	1 Urbis LED	Axia 16 LED 500mA	28 Watts	6.00 Metres	Galvanised Steel	
Y	10	STREET LIGHTING	ST CHRISTOPHERS ROAD	HUMBERSTON	530631.4	405673.37	1993		57640	1 Urbis LED	Axia 16 LED 500mA	28 Watts	6.00 Metres	Galvanised Steel	
Y	11	STREET LIGHTING	ST CHRISTOPHERS ROAD	HUMBERSTON	530626.96	405705.39	2012	04/07/2012	57641	1 Urbis LED	Axia 16 LED 500mA	28 Watts	6.00 Metres	Galvanised Steel	
Y	12	STREET LIGHTING	ST CHRISTOPHERS ROAD	HUMBERSTON	530636.46	405737.04	2014	29/08/2014	57642	1 Urbis LED	Axia 16 LED 500mA	28 Watts	6.00 Metres	Galvanised Steel	
Y	13	STREET LIGHTING	ST CHRISTOPHERS ROAD	HUMBERSTON	530681.63	405741.83	2002		57643	1 Urbis LED	Axia 16 LED 500mA	28 Watts	6.00 Metres	Stainless Steel	
Y	1	STREET LIGHTING	ST JOHNS ROAD	HUMBERSTON	530822.04	405596.6	2014	29/08/2014	57786	1 Urbis LED	Axia 16 LED 500mA	28 Watts	6.00 Metres	Galvanised Steel	
Y	2	STREET LIGHTING	ST JOHNS ROAD	HUMBERSTON	530779.28	405594.68	2021	13/08/2021	57787	Urbis	Axia 24 LED 500mA	28 Watts	6.00 Metres	Galvanised Steel	
Y	3	STREET LIGHTING	ST JOHNS ROAD	HUMBERSTON	530737.62	405579.64	2014	29/08/2014	57788	1 Urbis LED	Axia 16 LED 500mA	28 Watts	6.00 Metres	Galvanised Steel	
Y	4	STREET LIGHTING	ST JOHNS ROAD	HUMBERSTON	530710.15	405611.09	2014	29/08/2014	57789	1 Urbis LED	Axia 16 LED 500mA	28 Watts	6.00 Metres	Galvanised Steel	
Y	5	STREET LIGHTING	ST JOHNS ROAD	HUMBERSTON	530703.29	405653.11	2014	29/08/2014	57790	1 Urbis LED	Axia 16 LED 500mA	28 Watts	6.00 Metres	Galvanised Steel	
Y	6	STREET LIGHTING	ST JOHNS ROAD	HUMBERSTON	530679.49	405684.33	2014	29/08/2014	57791	1 Urbis LED	Axia 16 LED 500mA	28 Watts	6.00 Metres	Galvanised Steel	
Y	1	STREET LIGHTING	ST MARKS ROAD	HUMBERSTON	530848.12	405644.16	2014	29/08/2014	57808	1 Urbis LED	Axia 16 LED 500mA	28 Watts	6.00 Metres	Galvanised Steel	
Y	2	STREET LIGHTING	ST MARKS ROAD	HUMBERSTON	530858.04	405608.74	2006		57809	1 Urbis LED	Axia 16 LED 500mA	28 Watts	6.00 Metres	Stainless Steel	
Y	3	STREET LIGHTING	ST MARKS ROAD	HUMBERSTON	530857.23	405573.75	2014	29/08/2014	57810	1 Urbis LED	Axia 16 LED 500mA	28 Watts	6.00 Metres	Galvanised Steel	
Y	1	STREET LIGHTING	ST MATHEWS ROAD	HUMBERSTON	530902.99	405681.88	1995		57817	Urbis	Axia 16 LED 350mA	19 Watts	6.00 Metres	Galvanised Steel	
Y	2	STREET LIGHTING	ST MATHEWS ROAD	HUMBERSTON	530908.69	405654.97	1995		57818	Urbis	Axia 16 LED 350mA	19 Watts	6.00 Metres	Galvanised Steel	

Y	3	STREET LIGHTING	ST MATHEWS ROAD	HUMBERSTON	530908.94	405625.17	1995		57819	Urbis	Axia 16 LED 350mA	19 Watts	6.00 Metres	Galvanised Steel	
Y	4	STREET LIGHTING	ST MATHEWS ROAD	HUMBERSTON	530915.14	405596.75	1995		57820	Urbis	Axia 16 LED 350mA	19 Watts	6.00 Metres	Galvanised Steel	
Y	5	STREET LIGHTING	ST MATHEWS ROAD	HUMBERSTON	530927.04	405572.61	1995		57821	Urbis	Axia 16 LED 350mA	19 Watts	6.00 Metres	Galvanised Steel	
Y	6	STREET LIGHTING	ST MATHEWS ROAD	HUMBERSTON	530926.91	405544.6	1995		57822	Urbis	Axia 16 LED 350mA	19 Watts	6.00 Metres	Galvanised Steel	
Y	1	STREET LIGHTING	ST PETERS CRESCENT	HUMBERSTON	530639.43	405890.61	2014	29/08/2014	57978	1 Urbis LED	Axia 16 LED 500mA	28 Watts	6.00 Metres	Galvanised Steel	
Y	2	STREET LIGHTING	ST PETERS CRESCENT	HUMBERSTON	530675.88	405894.03	2014	29/08/2014	57979	1 Urbis LED	Axia 16 LED 500mA	28 Watts	6.00 Metres	Galvanised Steel	
Y	3	STREET LIGHTING	ST PETERS CRESCENT	HUMBERSTON	530713.98	405890.93	2014	29/08/2014	57980	1 Urbis LED	Axia 16 LED 500mA	28 Watts	6.00 Metres	Galvanised Steel	
Y	1	STREET LIGHTING	ST THOMAS CLOSE	HUMBERSTON	531014.6	405411.97	2002		57987	1 Urbis LED	Axia 16 LED 500mA	28 Watts	5.00 Metres	Galvanised Steel	
Y	2	STREET LIGHTING	ST THOMAS CLOSE	HUMBERSTON	530982.57	405410.26	2014	29/08/2014	57988	1 Urbis LED	Axia 16 LED 500mA	28 Watts	6.00 Metres	Galvanised Steel	
Y	3	STREET LIGHTING	ST THOMAS CLOSE	HUMBERSTON	530958.78	405401.83	1988		57989	1 Urbis LED	Axia 16 LED 500mA	28 Watts	5.00 Metres	Galvanised Steel	
Y	4	STREET LIGHTING	ST THOMAS CLOSE	HUMBERSTON	530935.36	405416.51	2006		57990	1 Urbis LED	Axia 16 LED 500mA	28 Watts	5.00 Metres	Stainless Steel	
Y	5	STREET LIGHTING	ST THOMAS CLOSE	HUMBERSTON	530926.75	405463.64	2014	29/08/2014	57991	1 Urbis LED	Axia 16 LED 500mA	28 Watts	6.00 Metres	Galvanised Steel	
Y	6	STREET LIGHTING	ST THOMAS CLOSE	HUMBERSTON	530910.42	405502.28	1960		57992	1 Urbis LED	Axia 16 LED 500mA	28 Watts	5.00 Metres	Galvanised Steel	
Y	1	STREET LIGHTING	THE CROFTS	HUMBERSTON	530881.86	405794.85	2014	29/08/2014	58971	1 Urbis LED	Axia 16 LED 500mA	28 Watts	6.00 Metres	Galvanised Steel	
Y	2	STREET LIGHTING	THE CROFTS	HUMBERSTON	530831.74	405786.37	2014	29/08/2014	58972	1 Urbis LED	Axia 16 LED 500mA	28 Watts	6.00 Metres	Galvanised Steel	
Y	1	STREET LIGHTING	WILTON ROAD	HUMBERSTON	529884.12	406392.93	1990		60761	1 Urbis LED	Teceo 40 LED 500mA	64 Watts	8.00 Metres	Galvanised Steel	
Y	2	STREET LIGHTING	WILTON ROAD	HUMBERSTON	529854.38	406374.77	1990		60762	1 Urbis LED	Teceo 40 LED 500mA	64 Watts	8.00 Metres	Galvanised Steel	
Y	3	STREET LIGHTING	WILTON ROAD	HUMBERSTON	529842.48	406342.87	1990		60763	1 Urbis LED	Teceo 40 LED 500mA	64 Watts	8.00 Metres	Galvanised Steel	
Y	4	STREET LIGHTING	WILTON ROAD	HUMBERSTON	529811.22	406321.04	1990		60764	1 Urbis LED	Teceo 40 LED 500mA	64 Watts	8.00 Metres	Galvanised Steel	
Y	5	STREET LIGHTING	WILTON ROAD	HUMBERSTON	529795.02	406285.6	1990		60765	1 Urbis LED	Teceo 40 LED 500mA	64 Watts	8.00 Metres	Galvanised Steel	
Y	6	STREET LIGHTING	WILTON ROAD	HUMBERSTON	529772.99	406259.71	1990		60766	1 Urbis LED	Teceo 40 LED 500mA	64 Watts	8.00 Metres	Galvanised Steel	
Y	7	STREET LIGHTING	WILTON ROAD	HUMBERSTON	529752.11	406236.42	1990		60767	1 Urbis LED	Teceo 40 LED 500mA	64 Watts	8.00 Metres	Galvanised Steel	
Y	8	STREET LIGHTING	WILTON ROAD	HUMBERSTON	529718.06	406224.97	1990		60768	1 Urbis LED	Teceo 40 LED 500mA	64 Watts	8.00 Metres	Galvanised Steel	
Y	9	STREET LIGHTING	WILTON ROAD	HUMBERSTON	529697.93	406196.17	1990		60769	1 Urbis LED	Teceo 40 LED 500mA	64 Watts	8.00 Metres	Galvanised Steel	
Y	10	STREET LIGHTING	WILTON ROAD	HUMBERSTON			2022	12/10/2022	69037	Urbis	Teceo 40 LED 500mA	64 Watts	8.00 Metres	Galvanised Steel	
Y	11	STREET LIGHTING	WILTON ROAD	HUMBERSTON	529636.21	406163.76	1990		60771	1 Urbis LED	Teceo 40 LED 500mA	64 Watts	8.00 Metres	Galvanised Steel	
Y	12	STREET LIGHTING	WILTON ROAD	HUMBERSTON	529618.95	406137.47	1990		60772	1 Urbis LED	Teceo 40 LED 500mA	64 Watts	8.00 Metres	Galvanised Steel	
Y	13	STREET LIGHTING	WILTON ROAD	HUMBERSTON	529589.2	406115.38	1990		60773	1 Urbis LED	Teceo 40 LED 500mA	64 Watts	8.00 Metres	Galvanised Steel	
Y	14	STREET LIGHTING	WILTON ROAD	HUMBERSTON	529566.54	406105.95	1990		60774	1 Urbis LED	Teceo 40 LED 500mA	64 Watts	8.00 Metres	Galvanised Steel	
Y	15	STREET LIGHTING	WILTON ROAD	HUMBERSTON	529550.34	406071.27	1990		60775	1 Urbis LED	Teceo 40 LED 500mA	64 Watts	8.00 Metres	Galvanised Steel	
Y	16	STREET LIGHTING	WILTON ROAD	HUMBERSTON	529557.94	406037.66	2022	10/05/2022	68918	Urbis	Teceo 40 LED 500mA	64 Watts	8.00 Metres	Galvanised Steel	
Y	17	STREET LIGHTING	WILTON ROAD	HUMBERSTON	529574.19	406009.97	1990		60777	1 Urbis LED	Teceo 40 LED 500mA	64 Watts	8.00 Metres	Galvanised Steel	
Y	18	STREET LIGHTING	WILTON ROAD	HUMBERSTON	529581.43	405972.04	2002		60778	1 Urbis LED	Teceo 40 LED 500mA	64 Watts	8.00 Metres	Stainless Steel	
Y	1	STREET LIGHTING	WINDERMERE CRESCENT	HUMBERSTON	530115.61	406247.06	2014		60881	1 Urbis LED	Axia 16 LED 500mA	28 Watts	6.00 Metres	Galvanised Steel	
Y	2	STREET LIGHTING	WINDERMERE CRESCENT	HUMBERSTON	530091.56	406227.63	2014		60882	1 Urbis LED	Axia 16 LED 500mA	28 Watts	6.00 Metres	Galvanised Steel	
Y	3	STREET LIGHTING	WINDERMERE CRESCENT	HUMBERSTON	530101.94	406183.58	2014		60883	1 Urbis LED	Axia 16 LED 500mA	28 Watts	6.00 Metres	Galvanised Steel	
Y	4	STREET LIGHTING	WINDERMERE CRESCENT	HUMBERSTON	530121.31	406147.38	2014		60884	1 Urbis LED	Axia 16 LED 500mA	28 Watts	6.00 Metres	Galvanised Steel	
Y	5	STREET LIGHTING	WINDERMERE CRESCENT	HUMBERSTON	530166.49	406131.47	2014		60885	1 Urbis LED	Axia 16 LED 500mA	28 Watts	6.00 Metres	Galvanised Steel	
Y	6	STREET LIGHTING	WINDERMERE CRESCENT	HUMBERSTON	530203.2	406108.24	2014		60886	1 Urbis LED	Axia 16 LED 500mA	28 Watts	6.00 Metres	Galvanised Steel	
Y	1	STREET LIGHTING	ENNERDALE CLOSE	HUMBERSTON	530374.39	406003.33	1997		48047	1 Urbis LED	Axia 16 LED 500mA	28 Watts	6.00 Metres	Galvanised Steel	
Y	2	STREET LIGHTING	ENNERDALE CLOSE	HUMBERSTON	530343.63	406031.88	2014		48048	1 Urbis LED	Axia 16 LED 500mA	28 Watts	6.00 Metres	Steel	
Y	3	STREET LIGHTING	ENNERDALE CLOSE	HUMBERSTON	530305.41	406046.37	2014		48049	1 Urbis LED	Axia 16 LED 500mA	28 Watts	6.00 Metres	Steel	
Y	1	STREET LIGHTING	GRASMERE GROVE	HUMBERSTON	530156.11	406014.72	2014		49523	1 Urbis LED	Axia 16 LED 500mA	28 Watts	6.00 Metres	Galvanised Steel	
Y	2	STREET LIGHTING	GRASMERE GROVE	HUMBERSTON	530191.43	406015.8	2014		49524	1 Urbis LED	Axia 16 LED 500mA	28 Watts	6.00 Metres	Galvanised Steel	
Y	1	STREET LIGHTING	JACKSON PLACE	HUMBERSTON	529656.07	406113.47	1966		51399	1 Urbis LED	Teceo 32 LED 500mA	52 Watts	5.00 Metres	Galvanised Steel	
Y	2	STREET LIGHTING	JACKSON PLACE	HUMBERSTON	529656.83	406063.01	2007		51400	1 Urbis LED	Teceo 32 LED 500mA	52 Watts	6.00 Metres	Stainless Steel	
Y	3	STREET LIGHTING	JACKSON PLACE	HUMBERSTON	529666.47	406016.71	2003		51401	1 Urbis LED	Teceo 32 LED 500mA	52 Watts	6.00 Metres	Stainless Steel	
Y	4	STREET LIGHTING	JACKSON PLACE	HUMBERSTON	529703.43	406005.63	2003		51402	1 Urbis LED	Teceo 32 LED 500mA	52 Watts	6.00 Metres	Stainless Steel	
Y	5	STREET LIGHTING	JACKSON PLACE	HUMBERSTON	529719.94	406018.67	2014	29/07/2014	51403	1 Urbis LED	Teceo 32 LED 500mA	52 Watts	6.00 Metres	Galvanised Steel	
Y	6	STREET LIGHTING	JACKSON PLACE	HUMBERSTON	529763.36	406017.6	2014	29/07/2014	51404	1 Urbis LED	Teceo 32 LED 500mA	52 Watts	6.00 Metres	Galvanised Steel	
Y	7	STREET LIGHTING	JACKSON PLACE	HUMBERSTON	529805.13	406036.55	2014	29/07/2014	51405	1 Urbis LED	Teceo 32 LED 500mA	52 Watts	6.00 Metres	Galvanised Steel	
Y	8	STREET LIGHTING	JACKSON PLACE	HUMBERSTON	529850.9	406035.33	2014		51406	1 Urbis LED	Teceo 32 LED 500mA	52 Watts	6.00 Metres	Galvanised Steel	
Y	1	STREET LIGHTING	LOMOND GROVE	HUMBERSTON	530251.66	405938.05	2014		52753	1 Urbis LED	Axia 16 LED 500mA	28 Watts	6.00 Metres	Steel	
Y	2	STREET LIGHTING	LOMOND GROVE	HUMBERSTON	530216.09	405931.6	2014		52754	1 Urbis LED	Axia 16 LED 500mA	28 Watts	6.00 Metres	Steel	
Y	1	STREET LIGHTING	PAUL CRESCENT	HUMBERSTON	530778.05	405978.15	2014	29/08/2014	54804	1 Urbis LED	Axia 16 LED 500mA	28 Watts	6.00 Metres	Galvanised Steel	
Y	2	STREET LIGHTING	PAUL CRESCENT	HUMBERSTON	530818.56	405984.16	2014		54805	1 Urbis LED	Axia 16 LED 500mA	28 Watts	6.00 Metres	Galvanised Steel	
Y	1	STREET LIGHTING	QUEEN ELIZABETH ROAD	HUMBERSTON	530907.31	405867.97	1998		55742	1 Urbis LED	Axia 16 LED 500mA	28 Watts	6.00 Metres	Galvanised Steel	
Y	2	STREET LIGHTING	QUEEN ELIZABETH ROAD	HUMBERSTON	530875.24	405870.34	1998		55743	1 Urbis LED	Axia 16 LED 500mA	28 Watts	6.00 Metres	Galvanised Steel	
Y	3	STREET LIGHTING	QUEEN ELIZABETH ROAD	HUMBERSTON	530849.46	405863.8	1998		55744	1 Urbis LED	Axia 16 LED 500mA	28 Watts	6.00 Metres	Galvanised Steel	
Y	4	STREET LIGHTING	QUEEN ELIZABETH ROAD	HUMBERSTON	530828.53	405846.91	1998		55745	1 Urbis LED	Axia 16 LED 500mA	28 Watts	6.00 Metres	Galvanised Steel	
Y	5	STREET LIGHTING	QUEEN ELIZABETH ROAD	HUMBERSTON	530796.13	405848.75	1998		55746	1 Urbis LED	Axia 16 LED 500mA	28 Watts	6.00 Metres	Galvanised Steel	
Y	6	STREET LIGHTING	QUEEN ELIZABETH ROAD	HUMBERSTON	530762.73	405839.67	1998		55747	1 Urbis LED	Axia 16 LED 500mA	28 Watts	6.00 Metres	Galvanised Steel	
Y	7	STREET LIGHTING	QUEEN ELIZABETH ROAD	HUMBERSTON	530731.22	405830.97	1998		55748	1 Urbis LED	Axia 16 LED 500mA	28 Watts	6.00 Metres	Galvanised Steel	
Y	8	STREET LIGHTING	QUEEN ELIZABETH ROAD	HUMBERSTON	530698.54	405822.01	1998		55749	1 Urbis LED	Axia 16 LED 500mA	28 Watts	6.00 Metres	Galvanised Steel	
Y	9	STREET LIGHTING	QUEEN ELIZABETH ROAD	HUMBERSTON	530676.39	405805.42	1998		55750	1 Urbis LED	Axia 16 LED 500mA	28 Watts	6.00 Metres	Galvanised Steel	
Y	10	STREET LIGHTING	QUEEN ELIZABETH ROAD	HUMBERSTON	530655.76	405815.74	1998		55751	1 Urbis LED	Axia 16 LED 500mA	28 Watts	6.00 Metres	Galvanised Steel	
Y	11	STREET LIGHTING	QUEEN ELIZABETH ROAD	HUMBERSTON	530623.86	405830.36	1998		55752	1 Urbis LED	Axia 16 LED 500mA	28 Watts	6.00 Metres	Galvanised Steel	
Y	12	STREET LIGHTING	QUEEN ELIZABETH ROAD	HUMBERSTON	530627.28	405864.79	1998		55753	1 Urbis LED	Axia 16 LED 500mA	28 Watts	6.00 Metres	Galvanised Steel	
Y	13	STREET LIGHTING	QUEEN ELIZABETH ROAD	HUMBERSTON	530610.69	405895.52	1998		55754	1 Urbis LED	Axia 16 LED 500mA	28 Watts	6.00 Metres	Galvanised Steel	
Y	14	STREET LIGHTING	QUEEN ELIZABETH ROAD	HUMBERSTON	530617.05	405920.96	1998		55755	1 Urbis LED	Axia 16 LED 500mA	28 Watts	6.00 Metres	Galvanised Steel	
Y	15	STREET LIGHTING	QUEEN ELIZABETH ROAD	HUMBERSTON	530624.13	405955.26	1998		55756	1 Urbis LED	Axia 16 LED 500mA	28 Watts	6.00 Metres	Galvanised Steel	
Y	16	STREET LIGHTING	QUEEN ELIZABETH ROAD	HUMBERSTON	530654.77	405955.07	1998		55757	1 Urbis LED	Axia 16 LED 500mA	28 Watts	6.00 Metres	Galvanised Steel	
Y	17	STREET LIGHTING	QUEEN ELIZABETH ROAD	HUMBERSTON	530682.99	405959.56	1998		55758	1 Urbis LED	Axia 16 LED 500mA	28 Watts	6.00 Metres	Galvanised Steel	
Y	18	STREET LIGHTING	QUEEN ELIZABETH ROAD	HUMBERSTON	530713.12	405975.45	1998		55759	1 Urbis LED	Axia 16 LED 500mA	28 Watts	6.00 Metres	Galvanised Steel	
Y	19	STREET LIGHTING	QUEEN ELIZABETH ROAD	HUMBERSTON	530742.61	405969.6	1998		55760	1 Urbis LED	Axia 16 LED 500mA	28 Watts	6.00 Metres	Galvanised Steel	
Y	20	STREET LIGHTING	QUEEN ELIZABETH ROAD	HUMBERSTON	530762.99	405944.28	1998		55761	1 Urbis LED	Axia 16 LED 500mA	28 Watts	6.00 Metres	Galvanised Steel	
Y	21	STREET LIGHTING	QUEEN ELIZABETH ROAD	HUMBERSTON	530761.22	405908.75	1998		55762	1 Urbis LED	Axia 16 LED 500mA	28 Watts	6.00 Metres	Galvanised Steel	
Y	22	STREET LIGHTING	QUEEN ELIZABETH ROAD	HUMBERSTON	530778.09	405888.69	2023	21/03/2023	69219	Urbis	Axia 24 LED 500mA	28 Watts	6.00 Metres	Galvanised Steel	
Y	23	STREET LIGHTING	QUEEN ELIZABETH ROAD	HUMBERSTON	530775.39	405854.58	1998		55764	1 Urbis LED	Axia 16 LED 500mA	28 Watts	6.00 Metres	Galvanised Steel	
Y	1	STREET LIGHTING	STEPHEN CRESCENT	HUMBERSTON	530947.99	405711.96	2006		58456	Urbis	Axia 16 LED 350mA	19 Watts	6.00 Metres	Stainless Steel	
Y	2	STREET LIGHTING	STEPHEN CRESCENT	HUMBERSTON	530920.63	405702.95	2006		58457	1 Urbis LED	Axia 16 LED 500mA	28 Watts	6.00 Metres	Stainless Steel	
Y	3	STREET LIGHTING	STEPHEN CRESCENT	HUMBERSTON	530897.8	405696.88	2006		58458	1 Urbis LED	Axia 16 LED 500mA	28 Watts	6.00 Metres	Stainless Steel	
Y	4	STREET LIGHTING	STEPHEN CRESCENT	HUMBERSTON	530871.66	405684.35	2014		58459	1 Urbis LED	Axia 16 LED 500mA	28 Watts	6.00 Metres	Galvanised Steel	
Y	5	STREET LIGHTING	STEPHEN CRESCENT	HUMBERSTON	530839.13	405682.77	2014		58460	1 Urbis LED	Axia 16 LED 500mA	28 Watts	6.00 Metres	Galvanised Steel	
Y	6	STREET LIGHTING	STEPHEN CRESCENT	HUMBERSTON	530801.96	405667.51	1998		58461	1 Urbis LED	Axia 16 LED 500mA	28 Watts	6.00 Metres	Galvanised Steel	
Y	7	STREET LIGHTING	STEPHEN CRESCENT	HUMBERSTON	530778.29	405647.7	2014		58462	1 Urbis LED	Axia 16 LED 500mA	28 Watts	6.00 Metres	Galvanised Steel	
Y	8	STREET LIGHTING	STEPHEN CRESCENT	HUMBERSTON	530752.45	405650.15	2008		58463	1 Urbis LED	Axia 16 LED 500mA	28 Watts	6.00 Metres	Steel	
Y	9	STREET LIGHTING	STEPHEN CRESCENT	HUMBERSTON	530763.64	405676.08	2008		58464	1 Urbis LED	Axia 16 LED 500mA	28 Watts	6.00 Metres	Steel	
Y	10	STREET LIGHTING	STEPHEN CRESCENT	HUMBERSTON	530736.88	405685.03	2008		58465	1 Urbis LED	Axia 16 LED 500mA	28 Watts	6.00 Metres	Steel	
Y	11	STREET LIGHTING	STEPHEN CRESCENT	HUMBERSTON	530729.18	405714.53	2014		58466	1 Urbis LED	Axia 16 LED 500mA	28 Watts	6.00 Metres	Galvanised Steel	
Y	12	STREET LIGHTING	STEPHEN CRESCENT	HUMBERSTON	530725.63	405759.23	2014		58467	1 Urbis LED	Axia 16 LED 500mA	28 Watts	6.00 Metres	Galvanised Steel	
Y	13	STREET LIGHTING	STEPHEN CRESCENT	HUMBERSTON	530717.15	405792.71	2013		58468	1 Urbis LED	Axia 16 LED 500mA	28 Watts	6.00 Metres	Galvanised Steel	
Y	2	STREET LIGHTING	WILTON ROAD ROAD 1	HUMBERSTON	529532.55	405966.95	1989		60780	1 Urbis LED	Teceo 24 LED 500mA	40 Watts	6.00 Metres	Galvanised Steel	
Y	3	STREET LIGHTING	WILTON ROAD ROAD 1	HUMBERSTON	529497.16	405959.8	1989		60781	1 Urbis LED	Teceo 24 LED 500mA	40 Watts	6.00 Metres	Galvanised Steel	
Y	4	STREET LIGHTING	WILTON ROAD ROAD 1	HUMBERSTON	529471.03	405954.33	1989		60782	1 Urbis LED	Teceo 24 LED 500mA	40 Watts	6.00 Metres	Galvanised Steel	
Y	5	STREET LIGHTING	WILTON ROAD ROAD 1	HUMBERSTON	529446.73	405938.03	1989		60783	1 Urbis LED	Teceo 24 LED 500mA	40 Watts	6.00 Metres	Galvanised Steel	
Y	1	STREET LIGHTING	GRIMSBY ROAD MINI ROUNDABOUT	HUMBERSTON	530096.45	406304.24	2003		49927	1 Urbis LED	Teceo 40 LED 500mA	64 Watts	8.00 Metres	Stainless Steel	
Y	2	STREET LIGHTING	GRIMSBY ROAD MINI ROUNDABOUT	HUMBERSTON	530110.23	406295.85	2003		49928	1 Urbis LED	Teceo 48 LED 500mA	79 Watts	8.00 Metres	Stainless Steel	
Y	1	STREET LIGHTING	GRIMSBY ROAD	HUMBERSTON	529616.06	406707.59	2022	28/06/2022	68285	Urbis	mpera Maxi 128 LED 700m	277 Watts	12.00 Metres	Galvanised Steel	
Y	2	STREET LIGHTING	GRIMSBY ROAD	HUMBERSTON	529633.49	406678.91	1988		49830	1 Urbis LED	Ampera 48 LED 700mA	104 Watts	10.00 Metres	Galvanised Steel	
Y	3	STREET LIGHTING	GRIMSBY ROAD	HUMBERSTON	529647.72	406639.14	1988		49831	1 Urbis LED	Ampera 48 LED 700mA	104 Watts	10.00 Metres	Galvanised Steel	
Y	4	STREET LIGHTING	GRIMSBY ROAD	HUMBERSTON	529673.87	406626.85	1988		49832	1 Urbis LED	Ampera 48 LED 700mA	104 Watts	10.00 Metres	Galvanised Steel	
Y	5	STREET LIGHTING	GRIMSBY ROAD	HUMBERSTON	529678.21	406597.07	1988		49833	1 Urbis LED	Ampera 48 LED 700mA	104 Watts	10.00 Metres	Galvanised Steel	
Y	6	STREET LIGHTING	GRIMSBY ROAD	HUMBERSTON	529716.47	406567.64	2009		49834	1 Urbis LED	Ampera 48 LED 700mA	104 Watts	12.00 Metres	Steel	
Y	7	STREET LIGHTING	GRIMSBY ROAD	HUMBERSTON	529735.82	406539.19	1988		49835	1 Urbis LED	Ampera 48 LED 700mA	104 Watts	10.00 Metres	Galvanised Steel	
Y	8	STREET LIGHTING	GRIMSBY ROAD	HUMBERSTON	529764.19	406503.31	1988		49836	1 Urbis LED	Ampera 48 LED 700mA	104 Watts	10.00 Metres	Galvanised Steel	
Y	9	STREET LIGHTING	GRIMSBY ROAD	HUMBERSTON	529797.51	406472.29	1988		49837	1 Urbis LED	Ampera 48 LED 700mA	104 Watts	10.00 Metres	Galvanised Steel	
Y	10	STREET LIGHTING	GRIMSBY ROAD	HUMBERSTON	529833.47	406447.81	1988		49838	1 Urbis LED	Ampera 48 LED 700mA	104 Watts	10.00 Metres	Galvanised Steel	
Y	11	STREET LIGHTING	GRIMSBY ROAD	HUMBERSTON	529860.69	406421.92	1988		49839	1 Urbis LED	Ampera 48 LED 700mA	104 Watts	10.00 Metres	Galvanised Steel	
Y	12	STREET LIGHTING	GRIMSBY ROAD	HUMBERSTON	529876.24	406407.34	2014		66809	1 Urbis LED	Teceo 40 LED 500mA	64 Watts	10.00 Metres	Steel	

Y	13	STREET LIGHTING	GRIMSBY ROAD	HUMBERSTON	529896.39	406416.18	2014		66811	1 Urbis LED	Teceo 40 LED 500mA	64 Watts	10.00 Metres	Steel	
Y	14	STREET LIGHTING	GRIMSBY ROAD	HUMBERSTON	529893.31	406397.01	2017		66810	1 Urbis LED	Teceo 40 LED 500mA	64 Watts	10.00 Metres	Steel	
Y	15	STREET LIGHTING	GRIMSBY ROAD	HUMBERSTON	529916.11	406391.71	1955		49841	1 Urbis LED	Ampera 48 LED 700mA	104 Watts	10.00 Metres	Concrete	
Y	16	STREET LIGHTING	GRIMSBY ROAD	HUMBERSTON	529947.56	406385.78	1955		49842	1 Urbis LED	Ampera 48 LED 700mA	104 Watts	10.00 Metres	Concrete	
Y	17	STREET LIGHTING	GRIMSBY ROAD	HUMBERSTON	529967.79	406361.65	1955		49843	1 Urbis LED	Ampera 48 LED 700mA	104 Watts	10.00 Metres	Concrete	
Y	18	STREET LIGHTING	GRIMSBY ROAD	HUMBERSTON	530005.97	406351.58	1955		49844	1 Urbis LED	Ampera 48 LED 700mA	104 Watts	10.00 Metres	Concrete	
Y	19	STREET LIGHTING	GRIMSBY ROAD	HUMBERSTON	530031.51	406324.36	1955		49845	1 Urbis LED	Ampera 48 LED 700mA	104 Watts	10.00 Metres	Concrete	
Y	20	STREET LIGHTING	GRIMSBY ROAD	HUMBERSTON	530068.27	406315.71	1955		49846	1 Urbis LED	Ampera 48 LED 700mA	104 Watts	10.00 Metres	Concrete	
Y	21	STREET LIGHTING	GRIMSBY ROAD	HUMBERSTON	530094.34	406286.89	2003		49847	1 Urbis LED	Ampera 48 LED 700mA	104 Watts	8.00 Metres	Stainless Steel	
Y	22	STREET LIGHTING	GRIMSBY ROAD	HUMBERSTON	530127.74	406280.79	1988		49848	1 Urbis LED	Ampera 48 LED 700mA	104 Watts	10.00 Metres	Galvanised Steel	
Y	23	STREET LIGHTING	GRIMSBY ROAD	HUMBERSTON	530155.05	406252.07	1955		49849	1 Urbis LED	Ampera 48 LED 700mA	104 Watts	10.00 Metres	Concrete	
Y	24	STREET LIGHTING	GRIMSBY ROAD	HUMBERSTON	530192.87	406242.79	1955		49850	1 Urbis LED	Ampera 48 LED 700mA	104 Watts	10.00 Metres	Concrete	
Y	25	STREET LIGHTING	GRIMSBY ROAD	HUMBERSTON	530207.81	406219.91	1988		49851	1 Urbis LED	Ampera 48 LED 700mA	104 Watts	10.00 Metres	Galvanised Steel	
Y	26	STREET LIGHTING	GRIMSBY ROAD	HUMBERSTON	530234.05	406219.02	1988		49852	1 Urbis LED	Ampera 48 LED 700mA	104 Watts	10.00 Metres	Galvanised Steel	
Y	27	STREET LIGHTING	GRIMSBY ROAD	HUMBERSTON	530248.91	406196.93	1955		49853	1 Urbis LED	Ampera 48 LED 700mA	104 Watts	10.00 Metres	Concrete	
Y	28	STREET LIGHTING	GRIMSBY ROAD	HUMBERSTON	530276.03	406194.63	1955		49854	1 Urbis LED	Ampera 48 LED 700mA	104 Watts	10.00 Metres	Concrete	
Y	29	STREET LIGHTING	GRIMSBY ROAD	HUMBERSTON	530296.01	406169.89	1955		49855	1 Urbis LED	Ampera 48 LED 700mA	104 Watts	10.00 Metres	Concrete	
Y	30	STREET LIGHTING	GRIMSBY ROAD	HUMBERSTON	530327.02	406164.85	1955		49856	1 Urbis LED	Ampera 48 LED 700mA	104 Watts	10.00 Metres	Concrete	
Y	31	STREET LIGHTING	GRIMSBY ROAD	HUMBERSTON	530353.18	406136.66	1955		49857	1 Urbis LED	Ampera 48 LED 700mA	104 Watts	10.00 Metres	Concrete	
Y	32	STREET LIGHTING	GRIMSBY ROAD	HUMBERSTON	530389.32	406128.62	1955		49858	1 Urbis LED	Ampera 48 LED 700mA	104 Watts	10.00 Metres	Concrete	
Y	33	STREET LIGHTING	GRIMSBY ROAD	HUMBERSTON	530414.59	406100.69	1955		49859	1 Urbis LED	Ampera 48 LED 700mA	104 Watts	10.00 Metres	Concrete	
Y	34	STREET LIGHTING	GRIMSBY ROAD	HUMBERSTON	530453.12	406091.24	1955		49860	1 Urbis LED	Ampera 48 LED 700mA	104 Watts	10.00 Metres	Concrete	
Y	35	STREET LIGHTING	GRIMSBY ROAD	HUMBERSTON	530477.87	406063.76	1955		49861	1 Urbis LED	Ampera 48 LED 700mA	104 Watts	10.00 Metres	Concrete	
Y	36	STREET LIGHTING	GRIMSBY ROAD	HUMBERSTON	530496.95	406054.48	1955		49862	1 Urbis LED	Ampera 48 LED 700mA	104 Watts	10.00 Metres	Concrete	
Y	37	STREET LIGHTING	GRIMSBY ROAD	HUMBERSTON	530521.88	406056.16	1955		49863	1 Urbis LED	Ampera 48 LED 700mA	104 Watts	10.00 Metres	Concrete	
Y	38	STREET LIGHTING	GRIMSBY ROAD	HUMBERSTON	530551.04	406033.44	1955		49864	1 Urbis LED	Ampera 48 LED 700mA	104 Watts	10.00 Metres	Concrete	
Y	39	STREET LIGHTING	GRIMSBY ROAD	HUMBERSTON	530571.27	406050.59	1988		49865	1 Urbis LED	Ampera 48 LED 700mA	104 Watts	10.00 Metres	Galvanised Steel	
Y	40	STREET LIGHTING	GRIMSBY ROAD	HUMBERSTON	530598.05	406036.71	1988		49866	1 Urbis LED	Ampera 48 LED 700mA	104 Watts	10.00 Metres	Galvanised Steel	
Y	41	STREET LIGHTING	GRIMSBY ROAD	HUMBERSTON	530630.84	406051.91	1988		49867	1 Urbis LED	Ampera 48 LED 700mA	104 Watts	10.00 Metres	Galvanised Steel	
Y	42	STREET LIGHTING	GRIMSBY ROAD	HUMBERSTON	530663.53	406042.46	1955		49868	1 Urbis LED	Ampera 48 LED 700mA	104 Watts	10.00 Metres	Concrete	
Y	43	STREET LIGHTING	GRIMSBY ROAD	HUMBERSTON	530696.76	406056.51	1955		49869	1 Urbis LED	Ampera 48 LED 700mA	104 Watts	10.00 Metres	Concrete	
Y	44	STREET LIGHTING	GRIMSBY ROAD	HUMBERSTON	530732.21	406050.24	1955		49870	1 Urbis LED	Ampera 48 LED 700mA	104 Watts	10.00 Metres	Concrete	
Y	45	STREET LIGHTING	GRIMSBY ROAD	HUMBERSTON	530761.71	406067.64	1955		49871	1 Urbis LED	Ampera 48 LED 700mA	104 Watts	10.00 Metres	Concrete	
Y	46	STREET LIGHTING	GRIMSBY ROAD	HUMBERSTON	530785.75	406075.69	2006		49872	1 Urbis LED	Ampera 48 LED 700mA	104 Watts	12.00 Metres	Stainless Steel	
Y	47	STREET LIGHTING	GRIMSBY ROAD	HUMBERSTON	530809.87	406078.51	1988		49873	1 Urbis LED	Ampera 48 LED 700mA	104 Watts	10.00 Metres	Galvanised Steel	
Y	48	STREET LIGHTING	GRIMSBY ROAD	HUMBERSTON	530831.17	406067.82	1988		49874	1 Urbis LED	Ampera 48 LED 700mA	104 Watts	10.00 Metres	Galvanised Steel	
Y	49	STREET LIGHTING	GRIMSBY ROAD	HUMBERSTON	530844.61	406084.88	1988		49875	1 Urbis LED	Ampera 48 LED 700mA	104 Watts	10.00 Metres	Galvanised Steel	
Y	50	STREET LIGHTING	GRIMSBY ROAD	HUMBERSTON	530853.97	406066.23	1988		49876	1 Urbis LED	Ampera 48 LED 700mA	104 Watts	10.00 Metres	Galvanised Steel	
Y	1	STREET LIGHTING	ST LUKES GROVE	HUMBERSTON	530797.79	405688.62	2005		57794	1 Urbis LED	Axia 16 LED 500mA	28 Watts	5.00 Metres	Stainless Steel	
Y	2	STREET LIGHTING	ST LUKES GROVE	HUMBERSTON	530787.03	405726.69	2014	29/08/2014	57795	1 Urbis LED	Axia 16 LED 500mA	28 Watts	6.00 Metres	Galvanised Steel	
Y	3	STREET LIGHTING	ST LUKES GROVE	HUMBERSTON	530778.04	405779.06	2014	29/08/2014	57796	1 Urbis LED	Axia 16 LED 500mA	28 Watts	6.00 Metres	Galvanised Steel	
Y	1	STREET LIGHTING	BEDFORD ROAD	CLEETHORPES	531375.95	406241.68	2021	29/07/2021	68589	Urbis	Teceo 24 LED 500mA	40 Watts	6.00 Metres	Galvanised Steel	
Y	2	STREET LIGHTING	BEDFORD ROAD	CLEETHORPES	531357.38	406268.21	2021	29/07/2021	68679	Urbis	Teceo 24 LED 500mA	40 Watts	6.00 Metres	Galvanised Steel	
Y	3	STREET LIGHTING	BEDFORD ROAD	CLEETHORPES	531360.52	406300.52	2021	29/07/2021	68680	Urbis	Teceo 24 LED 500mA	40 Watts	6.00 Metres	Galvanised Steel	
Y	4	STREET LIGHTING	BEDFORD ROAD	CLEETHORPES	531342.19	406325.61	2021	29/07/2021	68681	Urbis	Teceo 24 LED 500mA	40 Watts	6.00 Metres	Galvanised Steel	
Y	5	STREET LIGHTING	BEDFORD ROAD	CLEETHORPES	531345.32	406357.93	2021	29/07/2021	68682	Urbis	Teceo 24 LED 500mA	40 Watts	6.00 Metres	Galvanised Steel	
Y	6	STREET LIGHTING	BEDFORD ROAD	CLEETHORPES	531328.68	406378.43	2021	29/07/2021	68683	Urbis	Teceo 24 LED 500mA	40 Watts	6.00 Metres	Galvanised Steel	
Y	7	STREET LIGHTING	BEDFORD ROAD	CLEETHORPES	531333.51	406405.68	2021	29/07/2021	68684	Urbis	Teceo 24 LED 500mA	40 Watts	6.00 Metres	Galvanised Steel	
Y	8	STREET LIGHTING	BEDFORD ROAD	CLEETHORPES	531316.14	406429.8	2021	29/07/2021	68685	Urbis	Teceo 24 LED 500mA	40 Watts	6.00 Metres	Galvanised Steel	
Y	9	STREET LIGHTING	BEDFORD ROAD	CLEETHORPES	531320.01	406457.29	2021	29/07/2021	68686	Urbis	Teceo 24 LED 500mA	40 Watts	6.00 Metres	Galvanised Steel	
Y	10	STREET LIGHTING	BEDFORD ROAD	CLEETHORPES	531301.67	406481.17	2021	29/07/2021	68687	Urbis	Teceo 24 LED 500mA	40 Watts	6.00 Metres	Galvanised Steel	
Y	11	STREET LIGHTING	BEDFORD ROAD	CLEETHORPES	531306.01	406512.77	2021	29/07/2021	68688	Urbis	Teceo 24 LED 500mA	40 Watts	6.00 Metres	Galvanised Steel	
Y	12	STREET LIGHTING	BEDFORD ROAD	CLEETHORPES	531287.2	406537.61	2021	29/07/2021	68689	Urbis	Teceo 24 LED 500mA	40 Watts	6.00 Metres	Galvanised Steel	
Y	1	STREET LIGHTING	BERKELEY ROAD	CLEETHORPES	531404.57	406353.83	2010		44075	Philips		21 Watts	6.00 Metres	Steel	
Y	2	STREET LIGHTING	BERKELEY ROAD	CLEETHORPES	531411.81	406377.81	2010		44076	Philips		21 Watts	6.00 Metres	Steel	
Y	3	STREET LIGHTING	BERKELEY ROAD	CLEETHORPES	531397.77	406401.69	2010		44077	Philips		21 Watts	6.00 Metres	Steel	
Y	4	STREET LIGHTING	BERKELEY ROAD	CLEETHORPES	531397.77	406429.46	2010		44078	Philips		21 Watts	6.00 Metres	Steel	
Y	5	STREET LIGHTING	BERKELEY ROAD	CLEETHORPES	531380.76	406454.76	2010		44079	Philips		21 Watts	6.00 Metres	Steel	
Y	6	STREET LIGHTING	BERKELEY ROAD	CLEETHORPES	531381.58	406489.19	2010		44080	Urbis	Axia 16 LED 350mA	19 Watts	6.00 Metres	Steel	
Y	7	STREET LIGHTING	BERKELEY ROAD	CLEETHORPES	531366.8	406517.26	2010		44081	Philips		21 Watts	6.00 Metres	Steel	
Y	8	STREET LIGHTING	BERKELEY ROAD	CLEETHORPES	531369.18	406549.96	2010		44082	Philips		21 Watts	6.00 Metres	Steel	
Y	9	STREET LIGHTING	BERKELEY ROAD	CLEETHORPES	531359.23	406581.94	1998		44083	Urbis	Axia 16 LED 350mA	19 Watts	5.00 Metres	Galvanised Steel	
Y	10	STREET LIGHTING	BERKELEY ROAD	CLEETHORPES	531358.6	406608.84	1998		44084	Urbis	Axia 16 LED 350mA	19 Watts	5.00 Metres	Galvanised Steel	
Y	11	STREET LIGHTING	BERKELEY ROAD	CLEETHORPES	531383.92	406607.83	1998		44085	Urbis	Axia 16 LED 350mA	19 Watts	5.00 Metres	Galvanised Steel	
Y	12	STREET LIGHTING	BERKELEY ROAD	CLEETHORPES	531415.44	406609.22	1998		44086	Urbis	Axia 16 LED 350mA	19 Watts	5.00 Metres	Galvanised Steel	
Y	13	STREET LIGHTING	BERKELEY ROAD	CLEETHORPES	531439.49	406609.22	1998		44087	Urbis	Axia 16 LED 350mA	19 Watts	5.00 Metres	Galvanised Steel	
Y	14	STREET LIGHTING	BERKELEY ROAD	CLEETHORPES	531471.89	406612.26	1998		44088	Urbis	Axia 16 LED 350mA	19 Watts	5.00 Metres	Galvanised Steel	
Y	15	STREET LIGHTING	BERKELEY ROAD	CLEETHORPES	531490.37	406617.32	1998		44089	Urbis	Axia 16 LED 350mA	19 Watts	5.00 Metres	Galvanised Steel	
Y	1	STREET LIGHTING	BERNERS ROAD	CLEETHORPES	531542.66	406331.77	2014		44090	Urbis	Axia 16 LED 350mA	19 Watts	6.00 Metres	Galvanised Steel	
Y	2	STREET LIGHTING	BERNERS ROAD	CLEETHORPES	531543.93	406307.91	2014		44091	Urbis	Axia 16 LED 350mA	19 Watts	6.00 Metres	Galvanised Steel	
Y	3	STREET LIGHTING	BERNERS ROAD	CLEETHORPES	531545.09	406283.79	2014	15/10/2014	44092	Urbis	Axia 16 LED 350mA	19 Watts	6.00 Metres	Galvanised Steel	
Y	4	STREET LIGHTING	BERNERS ROAD	CLEETHORPES	531545.17	406258.27	1994		44093	Urbis	Axia 16 LED 350mA	19 Watts	6.00 Metres	Galvanised Steel	
Y	1	STREET LIGHTING	BLAKENEY LEA	CLEETHORPES	530882.07	406471.93	1993		44217	Urbis	Axia 16 LED 350mA	19 Watts	5.00 Metres	Galvanised Steel	
Y	2	STREET LIGHTING	BLAKENEY LEA	CLEETHORPES	530915.87	406464.14	1993		44218	Urbis	Axia 16 LED 350mA	19 Watts	5.00 Metres	Galvanised Steel	
Y	3	STREET LIGHTING	BLAKENEY LEA	CLEETHORPES	530945.36	406461.42	1993		44219	Urbis	Axia 16 LED 350mA	19 Watts	5.00 Metres	Galvanised Steel	
Y	4	STREET LIGHTING	BLAKENEY LEA	CLEETHORPES	530954.66	406491.41	2022	04/01/2022	68801	Urbis	Axia 16 LED 350mA	19 Watts	6.00 Metres	Galvanised Steel	
Y	5	STREET LIGHTING	BLAKENEY LEA	CLEETHORPES	530950.3	406507.24	1993		44221	Urbis	Axia 16 LED 350mA	19 Watts	5.00 Metres	Galvanised Steel	
Y	1	STREET LIGHTING	BURNHAM REACH	CLEETHORPES	530849.93	406362.77	1993		44949	Urbis	Axia 16 LED 350mA	19 Watts	5.00 Metres	Galvanised Steel	
Y	2	STREET LIGHTING	BURNHAM REACH	CLEETHORPES	530872.08	406349.63	1993		44950	Urbis	Axia 16 LED 350mA	19 Watts	5.00 Metres	Galvanised Steel	
Y	3	STREET LIGHTING	BURNHAM REACH	CLEETHORPES	530874.23	406365.68	1993		44951	Urbis	Axia 16 LED 350mA	19 Watts	5.00 Metres	Galvanised Steel	
Y	4	STREET LIGHTING	BURNHAM REACH	CLEETHORPES	530894.23	406334.06	1993		44952	Urbis	Axia 16 LED 350mA	19 Watts	5.00 Metres	Galvanised Steel	
Y	5	STREET LIGHTING	BURNHAM REACH	CLEETHORPES	530893.85	406315.13	1993		44953	Urbis	Axia 16 LED 350mA	19 Watts	5.00 Metres	Galvanised Steel	
Y	1	STREET LIGHTING	CHELSEA WALK	CLEETHORPES	531022.15	406483.01	1979		45757	Urbis	Axia 16 LED 350mA	19 Watts	5.00 Metres	Galvanised Steel	
Y	2	STREET LIGHTING	CHELSEA WALK	CLEETHORPES	531036.82	406500.63		24/02/2017	45758	Urbis	Axia 16 LED 350mA	19 Watts	6.00 Metres	Galvanised Steel	
Y	1	STREET LIGHTING	FAIRWAY COURT	CLEETHORPES	532077.28	406501.97	2014		48352	1 Urbis LED	Axia 16 LED 500mA	28 Watts	6.00 Metres	Galvanised Steel	
Y	2	STREET LIGHTING	FAIRWAY COURT	CLEETHORPES	532110.95	406503.8	2014		48353	1 Urbis LED	Axia 16 LED 500mA	28 Watts	6.00 Metres	Galvanised Steel	
Y	3	STREET LIGHTING	FAIRWAY COURT	CLEETHORPES	532136.27	406518.93	2014		48354	1 Urbis LED	Axia 16 LED 500mA	28 Watts	6.00 Metres	Galvanised Steel	
Y	4	STREET LIGHTING	FAIRWAY COURT	CLEETHORPES	532159.3	406519.12	2014		48355	1 Urbis LED	Axia 16 LED 500mA	28 Watts	6.00 Metres	Galvanised Steel	
Y	5	STREET LIGHTING	FAIRWAY COURT	CLEETHORPES	532169.93	406501.33	1965		48356	1 Urbis LED	Axia 16 LED 500mA	28 Watts	5.00 Metres	Galvanised Steel	
Y	6	STREET LIGHTING	FAIRWAY COURT	CLEETHORPES	532177.66	406482.41	2014		48357	1 Urbis LED	Axia 16 LED 500mA	28 Watts	6.00 Metres	Galvanised Steel	
Y	7	STREET LIGHTING	FAIRWAY COURT	CLEETHORPES	532188.23	406459.48	2012		48358	1 Urbis LED	Axia 16 LED 500mA	28 Watts	6.00 Metres	Steel	
Y	8	STREET LIGHTING	FAIRWAY COURT	CLEETHORPES	532173.48	406437.04	2014		48359	1 Urbis LED	Axia 16 LED 500mA	28 Watts	6.00 Metres	Galvanised Steel	
Y	9	STREET LIGHTING	FAIRWAY COURT	CLEETHORPES	532136.52	406432.54	2014		48360	1 Urbis LED	Axia 16 LED 500mA	28 Watts	6.00 Metres	Galvanised Steel	
Y	10	STREET LIGHTING	FAIRWAY COURT	CLEETHORPES	532096.77	406435.52	2014		48361	1 Urbis LED	Axia 16 LED 500mA	28 Watts	6.00 Metres	Galvanised Steel	
Y	1	STREET LIGHTING	HILTON COURT	CLEETHORPES	531864.06	406389.37	1999		50860	1 Urbis LED	Axia 16 LED 500mA	28 Watts	6.00 Metres	Galvanised Steel	
Y	2	STREET LIGHTING	HILTON COURT	CLEETHORPES	531871.65	406417.78	1999		50861	1 Urbis LED	Axia 16 LED 500mA	28 Watts	6.00 Metres	Galvanised Steel	
Y	3	STREET LIGHTING	HILTON COURT	CLEETHORPES	531857	406450	2002		50862	1 Urbis LED	Axia 16 LED 500mA	28 Watts	6.00 Metres	Galvanised Steel	
Y	4	STREET LIGHTING	HILTON COURT	CLEETHORPES	531861.15	406478.78	1992		50863	1 Urbis LED	Axia 16 LED 500mA	28 Watts	6.00 Metres	Galvanised Steel	
Y	1	STREET LIGHTING	KINGS MEWS	CLEETHORPES	532206.1	406326.8	1992		51697	Urbis	Axia 16 LED 350mA	19 Watts	5.00 Metres	Galvanised Steel	
Y	2	STREET LIGHTING	KINGS MEWS	CLEETHORPES	532224.98	406344.54	1992		51698	Urbis	Axia 16 LED 350mA	19 Watts	5.00 Metres	Galvanised Steel	
Y	3	STREET LIGHTING	KINGS MEWS	CLEETHORPES	532212.17	406359.81	1992		51699	Urbis	Axia 16 LED 350mA	19 Watts	5.00 Metres	Galvanised Steel	
Y	4	STREET LIGHTING	KINGS MEWS	CLEETHORPES	532227.77	406375.86	1992		51700	Urbis	Axia 16 LED 350mA	19 Watts	5.00 Metres	Galvanised Steel	
Y	5	STREET LIGHTING	KINGS MEWS	CLEETHORPES	532222.02	406398.54	1992		51701	Urbis	Axia 16 LED 350mA	19 Watts	5.00 Metres	Galvanised Steel	
Y	6	STREET LIGHTING	KINGS MEWS	CLEETHORPES	532209.16	406389.22	1992		51702	Urbis	Axia 16 LED 350mA	19 Watts	5.00 Metres	Galvanised Steel	
Y	7	STREET LIGHTING	KINGS MEWS	CLEETHORPES	532192.96	406394.6	1992		51703	Urbis	Axia 16 LED 350mA	19 Watts	5.00 Metres	Galvanised Steel	
Y	8	STREET LIGHTING	KINGS MEWS	CLEETHORPES	532167.14	406389.28	1992		51704	Urbis	Axia 16 LED 350mA	19 Watts	5.00 Metres	Galvanised Steel	
Y	1	STREET LIGHTING	PARK LANE	CLEETHORPES	530861.07	406100.3	1993		54654	Urbis	Axia 16 LED 350mA	19 Watts	6.00 Metres	Galvanised Steel	
Y	2	STREET LIGHTING	PARK LANE	CLEETHORPES	530856.51	406127.01	1993		54655	Urbis	Axia 16 LED 350mA	19 Watts	6.00 Metres	Galvanised Steel	
Y	3	STREET LIGHTING	PARK LANE	CLEETHORPES	530857.78	406151.81	1993		54656	Urbis	Axia 16 LED 350mA	19 Watts	5.00 Metres	Galvanised Steel	
Y	4	STREET LIGHTING	PARK LANE	CLEETHORPES	530856.13	406177.19	1993		54657	Urbis	Axia 16 LED 350mA	19 Watts	5.00 Metres	Galvanised Steel	

Y	5	STREET LIGHTING	PARK LANE	CLEETHORPES	530858.54	406209.15	1993		54658	Urbis	Axia 16 LED 350mA	19 Watts	6.00 Metres	Galvanised Steel	
Y	6	STREET LIGHTING	PARK LANE	CLEETHORPES	530841.07	406220.86	1994		54659	Urbis	Axia 16 LED 350mA	19 Watts	6.00 Metres	Galvanised Steel	
Y	7	STREET LIGHTING	PARK LANE	CLEETHORPES	530821.97	406243.53	1994		54660	Urbis	Axia 16 LED 350mA	19 Watts	6.00 Metres	Galvanised Steel	
Y	8	STREET LIGHTING	PARK LANE	CLEETHORPES	530824.11	406269.09	2009		54661	Urbis	Axia 16 LED 350mA	19 Watts	6.00 Metres	Steel	
Y	9	STREET LIGHTING	PARK LANE	CLEETHORPES	530810.2	406290.38	1994		54662	Urbis	Axia 16 LED 350mA	19 Watts	6.00 Metres	Galvanised Steel	
Y	10	STREET LIGHTING	PARK LANE	CLEETHORPES	530812.07	406314.9	1994		54663	Urbis	Axia 16 LED 350mA	19 Watts	6.00 Metres	Galvanised Steel	
Y	11	STREET LIGHTING	PARK LANE	CLEETHORPES	530817.52	406342.12	1994		54664	Urbis	Axia 16 LED 350mA	19 Watts	6.00 Metres	Galvanised Steel	
Y	12	STREET LIGHTING	PARK LANE	CLEETHORPES	530827.14	406365.22	1994		54665	Urbis	Axia 16 LED 350mA	19 Watts	6.00 Metres	Galvanised Steel	
Y	13	STREET LIGHTING	PARK LANE	CLEETHORPES	530849.03	406382.5	1993		54666	Urbis	Axia 16 LED 350mA	19 Watts	6.00 Metres	Galvanised Steel	
Y	14	STREET LIGHTING	PARK LANE	CLEETHORPES	530863.84	406406.29	1993		54667	Urbis	Axia 16 LED 350mA	19 Watts	6.00 Metres	Galvanised Steel	
Y	15	STREET LIGHTING	PARK LANE	CLEETHORPES	530873.59	406431.92	1993		54668	Urbis	Axia 16 LED 350mA	19 Watts	6.00 Metres	Galvanised Steel	
Y	16	STREET LIGHTING	PARK LANE	CLEETHORPES	530864.35	406458.82	1994		54669	Urbis	Axia 16 LED 350mA	19 Watts	6.00 Metres	Galvanised Steel	
Y	17	STREET LIGHTING	PARK LANE	CLEETHORPES	530868.66	406488.91	2021	25/02/2021	68311	Urbis	Axia 16 LED 350mA	19 Watts	6.00 Metres	Galvanised Steel	
Y	18	STREET LIGHTING	PARK LANE	CLEETHORPES	530858.53	406514.14	1994		54671	Urbis	Axia 16 LED 350mA	19 Watts	6.00 Metres	Galvanised Steel	
Y	1	STREET LIGHTING	RIVERSIDE DRIVE	CLEETHORPES	531931.62	406397.35	2004		56133	1 Urbis LED	Axia 16 LED 500mA	28 Watts	6.00 Metres	Stainless Steel	
Y	2	STREET LIGHTING	RIVERSIDE DRIVE	CLEETHORPES	531936.78	406434.27	2014		56134	1 Urbis LED	Axia 16 LED 500mA	28 Watts	6.00 Metres	Galvanised Steel	
Y	3	STREET LIGHTING	RIVERSIDE DRIVE	CLEETHORPES	531924.75	406463.45	1963		56135	1 Urbis LED	Axia 16 LED 500mA	28 Watts	6.00 Metres	Steel	
Y	4	STREET LIGHTING	RIVERSIDE DRIVE	CLEETHORPES	531932.73	406490.47	2014		56136	1 Urbis LED	Axia 16 LED 500mA	28 Watts	6.00 Metres	Galvanised Steel	
Y	5	STREET LIGHTING	RIVERSIDE DRIVE	CLEETHORPES	531957.41	406505.42	1999		56137	1 Urbis LED	Axia 16 LED 500mA	28 Watts	6.00 Metres	Steel	
Y	6	STREET LIGHTING	RIVERSIDE DRIVE	CLEETHORPES	531987.53	406511.6	2014		56138	1 Urbis LED	Axia 16 LED 500mA	28 Watts	6.00 Metres	Galvanised Steel	
Y	7	STREET LIGHTING	RIVERSIDE DRIVE	CLEETHORPES	532018.27	406519.59	2014		56139	1 Urbis LED	Axia 16 LED 500mA	28 Watts	6.00 Metres	Galvanised Steel	
Y	8	STREET LIGHTING	RIVERSIDE DRIVE	CLEETHORPES	532048.65	406523.07	1991		56140	1 Urbis LED	Axia 16 LED 500mA	28 Watts	5.00 Metres	Galvanised Steel	
Y	9	STREET LIGHTING	RIVERSIDE DRIVE	CLEETHORPES	532059.66	406490.54	2014		56141	1 Urbis LED	Axia 16 LED 500mA	28 Watts	6.00 Metres	Galvanised Steel	
Y	10	STREET LIGHTING	RIVERSIDE DRIVE	CLEETHORPES	532074.47	406465.92	2014		56142	1 Urbis LED	Axia 16 LED 500mA	28 Watts	6.00 Metres	Galvanised Steel	
Y	11	STREET LIGHTING	RIVERSIDE DRIVE	CLEETHORPES	532076.12	406430.41	2014		56143	1 Urbis LED	Axia 16 LED 500mA	28 Watts	6.00 Metres	Galvanised Steel	
Y	12	STREET LIGHTING	RIVERSIDE DRIVE	CLEETHORPES	532093.22	406409.68	2008		56144	1 Urbis LED	Axia 16 LED 500mA	28 Watts	6.00 Metres	Steel	
Y	13	STREET LIGHTING	RIVERSIDE DRIVE	CLEETHORPES	532107.13	406373.52	1999		56145	1 Urbis LED	Axia 16 LED 500mA	28 Watts	6.00 Metres	Galvanised Steel	
Y	14	STREET LIGHTING	RIVERSIDE DRIVE	CLEETHORPES	532117.64	406336.62	1963		56146	1 Urbis LED	Axia 16 LED 500mA	28 Watts	6.00 Metres	Galvanised Steel	
Y	1	STREET LIGHTING	ROCHESTER COURT	CLEETHORPES	531149.87	406483.96	1985		56217	Urbis	Axia 16 LED 350mA	19 Watts	5.00 Metres	Galvanised Steel	
Y	2	STREET LIGHTING	ROCHESTER COURT	CLEETHORPES	531137.34	406508.76	1985		56218	Urbis	Axia 16 LED 350mA	19 Watts	5.00 Metres	Galvanised Steel	
Y	1	STREET LIGHTING	ROYAL COURT	CLEETHORPES	531996	406494	2002		56367	Urbis	Axia 16 LED 350mA	19 Watts	5.00 Metres	Stainless Steel	
Y	2	STREET LIGHTING	ROYAL COURT	CLEETHORPES	531993	406493	2002		56368	Urbis	Axia 16 LED 350mA	19 Watts	5.00 Metres	Stainless Steel	
Y	3	STREET LIGHTING	ROYAL COURT	CLEETHORPES	532005.58	406448.34	2002		56369	Urbis	Axia 16 LED 350mA	19 Watts	5.00 Metres	Stainless Steel	
Y	1	STREET LIGHTING	RUSSELL COURT	CLEETHORPES	531484	406474	2001		56417	Urbis	Axia 16 LED 350mA	19 Watts	5.00 Metres	Galvanised Steel	
Y	2	STREET LIGHTING	RUSSELL COURT	CLEETHORPES	531458	406472	2002		56418	Urbis	Axia 16 LED 350mA	19 Watts	5.00 Metres	Stainless Steel	
Y	3	STREET LIGHTING	RUSSELL COURT	CLEETHORPES	531442	406477	2002		56419	Urbis	Axia 16 LED 350mA	19 Watts	5.00 Metres	Stainless Steel	
Y	1	STREET LIGHTING	SEAFORD ROAD	CLEETHORPES	531363.64	406338.4	2006		56803	Urbis	Axia 16 LED 350mA	19 Watts	6.00 Metres	Stainless Steel	
Y	2	STREET LIGHTING	SEAFORD ROAD	CLEETHORPES	531391.38	406332.23	2006		56804	Urbis	Axia 16 LED 350mA	19 Watts	6.00 Metres	Stainless Steel	
Y	3	STREET LIGHTING	SEAFORD ROAD	CLEETHORPES	531416.54	406333.22	2006		56805	Urbis	Axia 16 LED 350mA	19 Watts	6.00 Metres	Stainless Steel	
Y	4	STREET LIGHTING	SEAFORD ROAD	CLEETHORPES	531448.31	406334.31	2002		56806	Urbis	Axia 16 LED 350mA	19 Watts	6.00 Metres	Stainless Steel	
Y	5	STREET LIGHTING	SEAFORD ROAD	CLEETHORPES	531479.34	406346.57	2006		56807	Urbis	Axia 16 LED 350mA	19 Watts	6.00 Metres	Stainless Steel	
Y	6	STREET LIGHTING	SEAFORD ROAD	CLEETHORPES	531512.29	406339.04	2006		56808	Urbis	Axia 16 LED 350mA	19 Watts	6.00 Metres	Stainless Steel	
Y	7	STREET LIGHTING	SEAFORD ROAD	CLEETHORPES	531541.34	406351.28	1989		56809	Urbis	Axia 16 LED 350mA	19 Watts	6.00 Metres	Galvanised Steel	
Y	8	STREET LIGHTING	SEAFORD ROAD	CLEETHORPES	531573.99	406343.63	2000		56810	Urbis	Axia 16 LED 350mA	19 Watts	6.00 Metres	Galvanised Steel	
Y	9	STREET LIGHTING	SEAFORD ROAD	CLEETHORPES	531601.57	406356.29	1989		56811	Urbis	Axia 16 LED 350mA	19 Watts	6.00 Metres	Galvanised Steel	
Y	10	STREET LIGHTING	SEAFORD ROAD	CLEETHORPES	531635.84	406359.32	2009	02/02/2009	68459	Urbis	Axia 16 LED 350mA	19 Watts	6.00 Metres	Stainless Steel	
Y	11	STREET LIGHTING	SEAFORD ROAD	CLEETHORPES	531665.69	406360.18	1989		56813	Urbis	Axia 16 LED 350mA	19 Watts	6.00 Metres	Galvanised Steel	
Y	12	STREET LIGHTING	SEAFORD ROAD	CLEETHORPES	531697.76	406362.86	1989		56814	Urbis	Axia 16 LED 350mA	19 Watts	6.00 Metres	Galvanised Steel	
Y	13	STREET LIGHTING	SEAFORD ROAD	CLEETHORPES	531713.91	406363.62	1989		56815	Urbis	Axia 16 LED 350mA	19 Watts	6.00 Metres	Galvanised Steel	
Y	14	STREET LIGHTING	SEAFORD ROAD	CLEETHORPES	531736.57	406354.83	2001		56816	Urbis	Axia 16 LED 350mA	19 Watts	6.00 Metres	Galvanised Steel	
Y	15	STREET LIGHTING	SEAFORD ROAD	CLEETHORPES	531633.93	406357.54	2009	02/02/2009	68460	Urbis	Axia 16 LED 350mA	19 Watts	6.00 Metres	Stainless Steel	
Y	16	STREET LIGHTING	SEAFORD ROAD	CLEETHORPES	531789.69	406369.48	2009	02/02/2009	68461	Urbis	Axia 16 LED 350mA	19 Watts	6.00 Metres	Stainless Steel	
Y	17	STREET LIGHTING	SEAFORD ROAD	CLEETHORPES	531810.96	406372.37	1989		56819	Urbis	Axia 16 LED 350mA	19 Watts	6.00 Metres	Galvanised Steel	
Y	18	STREET LIGHTING	SEAFORD ROAD	CLEETHORPES	531841.84	406365.9	2003		56820	Urbis	Axia 16 LED 350mA	19 Watts	6.00 Metres	Stainless Steel	
Y	19	STREET LIGHTING	SEAFORD ROAD	CLEETHORPES	531871.01	406368.51	2009	02/02/2009	68462	Urbis	Axia 16 LED 350mA	19 Watts	6.00 Metres	Stainless Steel	
Y	20	STREET LIGHTING	SEAFORD ROAD	CLEETHORPES	531894.82	406381.49	2009	02/02/2009	68463	Urbis	Axia 16 LED 350mA	19 Watts	6.00 Metres	Stainless Steel	
Y	21	STREET LIGHTING	SEAFORD ROAD	CLEETHORPES	531925.12	406384.56	2009	02/02/2009	68464	Urbis	Axia 16 LED 350mA	19 Watts	6.00 Metres	Stainless Steel	
Y	22	STREET LIGHTING	SEAFORD ROAD	CLEETHORPES	531958.17	406378.21	2009	02/02/2009	68465	Urbis	Axia 16 LED 350mA	19 Watts	6.00 Metres	Stainless Steel	
Y	23	STREET LIGHTING	SEAFORD ROAD	CLEETHORPES	531985.43	406392.74	2004		56825	Urbis	Axia 16 LED 350mA	19 Watts	6.00 Metres	Galvanised Steel	
Y	24	STREET LIGHTING	SEAFORD ROAD	CLEETHORPES	532014.31	406384.5	1989		56826	Urbis	Axia 16 LED 350mA	19 Watts	6.00 Metres	Stainless Steel	
Y	25	STREET LIGHTING	SEAFORD ROAD	CLEETHORPES	532046.39	406391.46	2004		56827	Urbis	Axia 16 LED 350mA	19 Watts	6.00 Metres	Galvanised Steel	
Y	26	STREET LIGHTING	SEAFORD ROAD	CLEETHORPES	532073.36	406398.64	2003		56828	Urbis	Axia 16 LED 350mA	19 Watts	6.00 Metres	Stainless Steel	
Y	1	STREET LIGHTING	WALDORF ROAD	CLEETHORPES	531014.81	406391.71	2014		59688	Urbis	Axia 16 LED 350mA	19 Watts	6.00 Metres	Galvanised Steel	
Y	2	STREET LIGHTING	WALDORF ROAD	CLEETHORPES	531047.72	406390.88	2014		59689	Urbis	Axia 16 LED 350mA	19 Watts	6.00 Metres	Galvanised Steel	
Y	3	STREET LIGHTING	WALDORF ROAD	CLEETHORPES	531071.77	406402.59	1999		59690	Urbis	Axia 16 LED 350mA	19 Watts	5.00 Metres	Galvanised Steel	
Y	4	STREET LIGHTING	WALDORF ROAD	CLEETHORPES	531099.75	406400	2014		59691	Urbis	Axia 16 LED 350mA	19 Watts	6.00 Metres	Galvanised Steel	
Y	5	STREET LIGHTING	WALDORF ROAD	CLEETHORPES	531120.63	406411.83	2014		59692	Urbis	Axia 16 LED 350mA	19 Watts	5.00 Metres	Galvanised Steel	
Y	6	STREET LIGHTING	WALDORF ROAD	CLEETHORPES	531151.64	406410.32	2014		59693	Urbis	Axia 16 LED 350mA	19 Watts	6.00 Metres	Galvanised Steel	
Y	7	STREET LIGHTING	WALDORF ROAD	CLEETHORPES	531174.05	406421.52	2014		59694	Urbis	Axia 16 LED 350mA	19 Watts	6.00 Metres	Galvanised Steel	
Y	8	STREET LIGHTING	WALDORF ROAD	CLEETHORPES	531201.58	406419.43	2006		59695	Urbis	Axia 16 LED 350mA	19 Watts	5.00 Metres	Stainless Steel	
Y	9	STREET LIGHTING	WALDORF ROAD	CLEETHORPES	531230.12	406432.63	2014		59696	Urbis	Axia 16 LED 350mA	19 Watts	6.00 Metres	Galvanised Steel	
Y	1	STREET LIGHTING	WESTBURY PARK	CLEETHORPES	531229.9	406475.33	1989		60333	Urbis	Axia 16 LED 350mA	19 Watts	5.00 Metres	Galvanised Steel	
Y	2	STREET LIGHTING	WESTBURY PARK	CLEETHORPES	531200.15	406481.85	1989		60334	Urbis	Axia 16 LED 350mA	19 Watts	5.00 Metres	Galvanised Steel	
Y	1	STREET LIGHTING	WESTBURY ROAD	CLEETHORPES	530945.91	406295.47	1990		60335	Urbis	Axia 16 LED 350mA	19 Watts	5.00 Metres	Galvanised Steel	
Y	2	STREET LIGHTING	WESTBURY ROAD	CLEETHORPES	530955.53	406283.7	1990		60336	Urbis	Axia 16 LED 350mA	19 Watts	5.00 Metres	Galvanised Steel	
Y	3	STREET LIGHTING	WESTBURY ROAD	CLEETHORPES	530952.62	406255.03	1990		60337	Urbis	Axia 16 LED 350mA	19 Watts	5.00 Metres	Galvanised Steel	
Y	4	STREET LIGHTING	WESTBURY ROAD	CLEETHORPES	530972.11	406240.03	1990		60338	Urbis	Axia 16 LED 350mA	19 Watts	5.00 Metres	Galvanised Steel	
Y	5	STREET LIGHTING	WESTBURY ROAD	CLEETHORPES	530991.32	406250.26	2011		60339	Urbis	Axia 16 LED 350mA	19 Watts	6.00 Metres	Steel	
Y	6	STREET LIGHTING	WESTBURY ROAD	CLEETHORPES	531021.97	406241.04	2011		60340	Urbis	Axia 16 LED 350mA	19 Watts	6.00 Metres	Steel	
Y	7	STREET LIGHTING	WESTBURY ROAD	CLEETHORPES	531045.94	406255.92	2011		60341	Urbis	Axia 16 LED 350mA	19 Watts	6.00 Metres	Steel	
Y	8	STREET LIGHTING	WESTBURY ROAD	CLEETHORPES	531071.8	406261.72	2011		60342	Urbis	Axia 16 LED 350mA	19 Watts	6.00 Metres	Steel	
Y	9	STREET LIGHTING	WESTBURY ROAD	CLEETHORPES	531101.36	406257.94	2011		60343	Urbis	Axia 16 LED 350mA	19 Watts	6.00 Metres	Steel	
Y	10	STREET LIGHTING	WESTBURY ROAD	CLEETHORPES	531129.82	406276.07	2011		60344	Urbis	Axia 16 LED 350mA	19 Watts	6.00 Metres	Steel	
Y	11	STREET LIGHTING	WESTBURY ROAD	CLEETHORPES	531162.06	406272.84	2011		60345	Urbis	Axia 16 LED 350mA	19 Watts	6.00 Metres	Steel	
Y	12	STREET LIGHTING	WESTBURY ROAD	CLEETHORPES	531182.35	406288.86	2011		60346	Urbis	Axia 16 LED 350mA	19 Watts	6.00 Metres	Steel	
Y	13	STREET LIGHTING	WESTBURY ROAD	CLEETHORPES	531214	406285.31	2011		60347	Urbis	Axia 16 LED 350mA	19 Watts	6.00 Metres	Steel	
Y	14	STREET LIGHTING	WESTBURY ROAD	CLEETHORPES	531244.63	406295.84	2011		60348	Urbis	Axia 16 LED 350mA	19 Watts	6.00 Metres	Steel	
Y	15	STREET LIGHTING	WESTBURY ROAD	CLEETHORPES	531252.31	406318.32	2011		60349	Urbis	Axia 16 LED 350mA	19 Watts	6.00 Metres	Steel	
Y	16	STREET LIGHTING	WESTBURY ROAD	CLEETHORPES	531269.76	406333.76	2011		60350	Urbis	Axia 16 LED 350mA	19 Watts	6.00 Metres	Steel	
Y	17	STREET LIGHTING	WESTBURY ROAD	CLEETHORPES	531267.11	406363.93	2011		60351	Urbis	Axia 16 LED 350mA	19 Watts	6.00 Metres	Steel	
Y	18	STREET LIGHTING	WESTBURY ROAD	CLEETHORPES	531250.12	406387.71	2011		60352	Urbis	Axia 16 LED 350mA	19 Watts	6.00 Metres	Steel	
Y	19	STREET LIGHTING	WESTBURY ROAD	CLEETHORPES	531254.58	406414.39	2011		60353	Urbis	Axia 16 LED 350mA	19 Watts	6.00 Metres	Steel	
Y	20	STREET LIGHTING	WESTBURY ROAD	CLEETHORPES	531248.44	406438.3	2011		60354	Urbis	Axia 16 LED 350mA	19 Watts	6.00 Metres	Steel	
Y	21	STREET LIGHTING	WESTBURY ROAD	CLEETHORPES	531232.46	406457.69	2011		60355	Urbis	Axia 16 LED 350mA	19 Watts	6.00 Metres	Steel	
Y	22	STREET LIGHTING	WESTBURY ROAD	CLEETHORPES	531242.17	406494.83	1990		60356	Urbis	Axia 16 LED 350mA	19 Watts	5.00 Metres	Galvanised Steel	
Y	23	STREET LIGHTING	WESTBURY ROAD	CLEETHORPES	531238.88	406520.71	1990		60357	Urbis	Axia 16 LED 350mA	19 Watts	5.00 Metres	Galvanised Steel	
Y	24	STREET LIGHTING	WESTBURY ROAD	CLEETHORPES	531209.52	406528.5	1990		60358	Urbis	Axia 16 LED 350mA	19 Watts	5.00 Metres	Galvanised Steel	
Y	25	STREET LIGHTING	WESTBURY ROAD	CLEETHORPES	531195.09	406516.98	1990		60359	Urbis	Axia 16 LED 350mA	19 Watts	5.00 Metres	Galvanised Steel	
Y	1	STREET LIGHTING	WESTPORT ROAD	CLEETHORPES	531018.6	406261.43	2014		60567	Urbis	Axia 16 LED 350mA	19 Watts	6.00 Metres	Galvanised Steel	
Y	2	STREET LIGHTING	WESTPORT ROAD	CLEETHORPES	531022.4	406290.1	1999		60568	Urbis	Axia 16 LED 350mA	19 Watts	5.00 Metres	Galvanised Steel	
Y	3	STREET LIGHTING	WESTPORT ROAD	CLEETHORPES	531011.01	406316.55	1995		60569	Urbis	Axia 16 LED 350mA	19 Watts	6.00 Metres	Galvanised Steel	
Y	4	STREET LIGHTING	WESTPORT ROAD	CLEETHORPES	531013.16	406341.93	2014		60570	Urbis	Axia 16 LED 350mA	19 Watts	6.00 Metres	Galvanised Steel	
Y	5	STREET LIGHTING	WESTPORT ROAD	CLEETHORPES	531008.73	406363.83	2014		60571	Urbis	Axia 16 LED 350mA	19 Watts	6.00 Metres	Galvanised Steel	
Y	6	STREET LIGHTING	WESTPORT ROAD	CLEETHORPES	530998.73	406385.54	2014		60572	Urbis	Axia 16 LED 350mA	19 Watts	6.00 Metres	Galvanised Steel	
Y	7	STREET LIGHTING	WESTPORT ROAD	CLEETHORPES	531002.65	406409.28	1999		60573	Urbis	Axia 16 LED 350mA	19 Watts	5.00 Metres	Galvanised Steel	
Y	8	STREET LIGHTING	WESTPORT ROAD	CLEETHORPES	530991.39	406435.92	1989		60574	Urbis	Axia 16 LED 350mA	19 Watts	5.00 Metres	Galvanised Steel	
Y	9	STREET LIGHTING	WESTPORT ROAD	CLEETHORPES	531006.83	406463.07	1989		60575	Urbis	Axia 16 LED 350mA	19 Watts	5.00 Metres	Galvanised Steel	
Y	10	STREET LIGHTING	WESTPORT ROAD	CLEETHORPES	531036.2	406467.57	1989		60576	Urbis	Axia 16 LED 350mA	19 Watts	5.00 Metres	Galvanised Steel	
Y	11	STREET LIGHTING	WESTPORT ROAD	CLEETHORPES	531066.83	406457.38	1989		60577	Urbis	Axia 16 LED 350mA	19 Watts	5.00 Metres	Galvanised Steel	
Y	12	STREET LIGHTING	WESTPORT ROAD	CLEETHORPES	531100.5	406463.52	1989		60578	Urbis	Axia 16 LED 350mA	19 Watts	5.00 Metres	Galvanised Steel	

Y	1	STREET LIGHTING	WEYFORD ROAD	CLEETHORPES	531270.25	406395.99	2011		60615	Urbis	Axia 16 LED 350mA	19 Watts	6.00 Metres	Steel	
Y	2	STREET LIGHTING	WEYFORD ROAD	CLEETHORPES	531290.47	406401.13	2011		60616	Urbis	Axia 16 LED 350mA	19 Watts	6.00 Metres	Steel	
Y	3	STREET LIGHTING	WEYFORD ROAD	CLEETHORPES	531310.23	406406.19	2011		60617	Urbis	Axia 16 LED 350mA	19 Watts	6.00 Metres	Steel	
Y	1	STREET LIGHTING	WHITEHALL ROAD	CLEETHORPES	531087.12	406171.25	2011		60655	Urbis	Axia 16 LED 350mA	19 Watts	6.00 Metres	Steel	
Y	2	STREET LIGHTING	WHITEHALL ROAD	CLEETHORPES	531082.92	406193.43	2011		60656	Urbis	Axia 16 LED 350mA	19 Watts	6.00 Metres	Steel	
Y	3	STREET LIGHTING	WHITEHALL ROAD	CLEETHORPES	531078.81	406216.05	2011		60657	Urbis	Axia 16 LED 350mA	19 Watts	6.00 Metres	Steel	
Y	4	STREET LIGHTING	WHITEHALL ROAD	CLEETHORPES	531074.7	406239.01	2011		60658	Urbis	Axia 16 LED 350mA	19 Watts	6.00 Metres	Steel	
Y	1	STREET LIGHTING	CARLTON CLOSE	CLEETHORPES	531740.62	406373.72	2010		45250	Philips		21 Watts	6.00 Metres	Steel	
Y	2	STREET LIGHTING	CARLTON CLOSE	CLEETHORPES	531735.34	406398.24	2010		45251	Philips		21 Watts	6.00 Metres	Steel	
Y	3	STREET LIGHTING	CARLTON CLOSE	CLEETHORPES	531728.77	406425.96	2010		45252	Philips		21 Watts	6.00 Metres	Steel	
Y	4	STREET LIGHTING	CARLTON CLOSE	CLEETHORPES	531702.27	406425.43	2010		45253	Urbis	Axia 16 LED 350mA	19 Watts	6.00 Metres	Steel	
Y	5	STREET LIGHTING	CARLTON CLOSE	CLEETHORPES	531670.35	406423.43	2010		45254	Philips		21 Watts	6.00 Metres	Steel	
Y	6	STREET LIGHTING	CARLTON CLOSE	CLEETHORPES	531649.06	406429.66	2010		45255	Philips		21 Watts	6.00 Metres	Steel	
Y	1	STREET LIGHTING	CAVENDISH CLOSE	CLEETHORPES	531517.37	406415.09	2010		45510	Urbis	Axia 16 LED 350mA	19 Watts	6.00 Metres	Steel	
Y	2	STREET LIGHTING	CAVENDISH CLOSE	CLEETHORPES	531545.96	406415.73	2010		45511	Urbis	Axia 16 LED 350mA	19 Watts	6.00 Metres	Steel	
Y	3	STREET LIGHTING	CAVENDISH CLOSE	CLEETHORPES	531575.08	406417.5	2010		45512	Urbis	Axia 16 LED 350mA	19 Watts	6.00 Metres	Steel	
Y	4	STREET LIGHTING	CAVENDISH CLOSE	CLEETHORPES	531598.68	406418.8	2010		45513	Urbis	Axia 16 LED 350mA	19 Watts	6.00 Metres	Steel	
Y	5	STREET LIGHTING	CAVENDISH CLOSE	CLEETHORPES	531621.39	406420.52	2010		45514	Urbis	Axia 16 LED 350mA	19 Watts	6.00 Metres	Steel	
Y	1	STREET LIGHTING	CUMBERLAND ROAD	CLEETHORPES	531500.41	406357.4	2010		47166	Philips		21 Watts	6.00 Metres	Steel	
Y	2	STREET LIGHTING	CUMBERLAND ROAD	CLEETHORPES	531507.04	406391.93	2010		47167	Philips		21 Watts	6.00 Metres	Steel	
Y	3	STREET LIGHTING	CUMBERLAND ROAD	CLEETHORPES	531497.47	406417.99	2010		47168	Philips		21 Watts	6.00 Metres	Steel	
Y	4	STREET LIGHTING	CUMBERLAND ROAD	CLEETHORPES	531496.02	406449.46	2010		47169	Philips		21 Watts	6.00 Metres	Steel	
Y	5	STREET LIGHTING	CUMBERLAND ROAD	CLEETHORPES	531503.77	406479.21	2022	14/02/2022	68817	Urbis	Axia 24 LED 500mA	28 Watts	6.00 Metres	Galvanised Steel	
Y	6	STREET LIGHTING	CUMBERLAND ROAD	CLEETHORPES	531493.51	406509.48	2010		47171	Philips		21 Watts	6.00 Metres	Steel	
Y	7	STREET LIGHTING	CUMBERLAND ROAD	CLEETHORPES	531495.35	406534.48	2010		47172	Philips		21 Watts	6.00 Metres	Steel	
Y	8	STREET LIGHTING	CUMBERLAND ROAD	CLEETHORPES	531471.96	406546.36	2010		47173	Urbis	Axia 16 LED 500mA	28 Watts	6.00 Metres	Steel	
Y	9	STREET LIGHTING	CUMBERLAND ROAD	CLEETHORPES	531442.77	406533.74	2010		47174	Philips		21 Watts	6.00 Metres	Steel	
Y	10	STREET LIGHTING	CUMBERLAND ROAD	CLEETHORPES	531411.64	406529.78	2010		47175	Philips		21 Watts	6.00 Metres	Steel	
Y	11	STREET LIGHTING	CUMBERLAND ROAD	CLEETHORPES	531383.24	406534.95	2010		47176	Philips		21 Watts	6.00 Metres	Steel	
Y	1	STREET LIGHTING	FAIRFIELD COURT	CLEETHORPES	531182.28	406404.87	1965	17/09/1999	48265	Urbis	Axia 16 LED 350mA	19 Watts	5.00 Metres	Galvanised Steel	
Y	2	STREET LIGHTING	FAIRFIELD COURT	CLEETHORPES	531186.58	406383.17	2014		48266	Urbis	Axia 16 LED 350mA	19 Watts	6.00 Metres	Galvanised Steel	
Y	3	STREET LIGHTING	FAIRFIELD COURT	CLEETHORPES	531195.19	406357.82	2014		48267	Urbis	Axia 16 LED 350mA	19 Watts	6.00 Metres	Galvanised Steel	
Y	1	STREET LIGHTING	KINGSTON CLOSE	CLEETHORPES	531267.39	406304.5	2011		51856	1 Urbis LED	Axia 16 LED 500mA	28 Watts	6.00 Metres	Steel	
Y	2	STREET LIGHTING	KINGSTON CLOSE	CLEETHORPES	531291.09	406278.88	2011		51857	1 Urbis LED	Axia 16 LED 500mA	28 Watts	6.00 Metres	Steel	
Y	1	STREET LIGHTING	MAYFAIR COURT	CLEETHORPES	531028.77	406322.63	2007		53433	1 Urbis LED	Axia 16 LED 500mA	28 Watts	6.00 Metres	Stainless Steel	
Y	2	STREET LIGHTING	MAYFAIR COURT	CLEETHORPES	531056.58	406320.48	1994		53434	1 Urbis LED	Axia 16 LED 500mA	28 Watts	6.00 Metres	Galvanised Steel	
Y	3	STREET LIGHTING	MAYFAIR COURT	CLEETHORPES	531083.03	406331.68	2007		53435	1 Urbis LED	Axia 16 LED 500mA	28 Watts	6.00 Metres	Stainless Steel	
Y	4	STREET LIGHTING	MAYFAIR COURT	CLEETHORPES	531122.02	406336.68	2007		53436	1 Urbis LED	Axia 16 LED 500mA	28 Watts	6.00 Metres	Stainless Steel	
Y	1	STREET LIGHTING	NORTH SEA LANE	CLEETHORPES	530878.04	406095.15	2022	27/06/2022	54224	1 Urbis LED	Teceo 40 LED 500mA	64 Watts	10.00 Metres	Galvanised Steel	
Y	2	STREET LIGHTING	NORTH SEA LANE	CLEETHORPES	530895.21	406096.21	2022	27/06/2022	69145	1 Urbis LED	Teceo 40 LED 500mA	64 Watts	10.00 Metres	Galvanised Steel	
Y	3	STREET LIGHTING	NORTH SEA LANE	CLEETHORPES	530915.38	406092.37	2022	27/06/2022	69146	Urbis	AXIA 3.3 48 LED 540mA	78 Watts	10.00 Metres	Galvanised Steel	
Y	4	STREET LIGHTING	NORTH SEA LANE	CLEETHORPES	530930.69	406107.37	2022	27/06/2022	69147	1 Urbis LED	Teceo 40 LED 500mA	64 Watts	10.00 Metres	Galvanised Steel	
Y	5	STREET LIGHTING	NORTH SEA LANE	CLEETHORPES	530967.33	406109.67	2022	27/06/2022	69148	1 Urbis LED	Teceo 40 LED 500mA	64 Watts	10.00 Metres	Galvanised Steel	
Y	6	STREET LIGHTING	NORTH SEA LANE	CLEETHORPES	530995.07	406128.42	2022	27/06/2022	69149	1 Urbis LED	Teceo 40 LED 500mA	64 Watts	10.00 Metres	Galvanised Steel	
Y	7	STREET LIGHTING	NORTH SEA LANE	CLEETHORPES	531030.49	406139.95	2022	27/06/2022	69150	1 Urbis LED	Teceo 40 LED 500mA	64 Watts	10.00 Metres	Galvanised Steel	
Y	8	STREET LIGHTING	NORTH SEA LANE	CLEETHORPES	531066.74	406148.01	2022	27/06/2022	69151	1 Urbis LED	Teceo 40 LED 500mA	64 Watts	10.00 Metres	Galvanised Steel	
Y	9	STREET LIGHTING	NORTH SEA LANE	CLEETHORPES	531111.91	406146.68	2022	27/06/2022	69152	1 Urbis LED	Teceo 40 LED 500mA	64 Watts	10.00 Metres	Galvanised Steel	
Y	10	STREET LIGHTING	NORTH SEA LANE	CLEETHORPES	531133.17	406162.17	2022	27/06/2022	69153	1 Urbis LED	Teceo 40 LED 500mA	64 Watts	10.00 Metres	Galvanised Steel	
Y	11	STREET LIGHTING	NORTH SEA LANE	CLEETHORPES	531171.24	406157.82	2022	27/06/2022	69154	1 Urbis LED	Teceo 40 LED 500mA	64 Watts	10.00 Metres	Galvanised Steel	
Y	12	STREET LIGHTING	NORTH SEA LANE	CLEETHORPES	531202.03	406175.82	2022	27/06/2022	69155	Urbis	AXIA 3.3 48 LED 540mA	78 Watts	10.00 Metres	Galvanised Steel	
Y	13	STREET LIGHTING	NORTH SEA LANE	CLEETHORPES	531237.67	406179.97	2022	27/06/2022	69156	1 Urbis LED	Teceo 40 LED 500mA	64 Watts	10.00 Metres	Galvanised Steel	
Y	14	STREET LIGHTING	NORTH SEA LANE	CLEETHORPES	531262.99	406206.01	2022	27/06/2022	69157	1 Urbis LED	Teceo 40 LED 500mA	64 Watts	10.00 Metres	Galvanised Steel	
Y	15	STREET LIGHTING	NORTH SEA LANE	CLEETHORPES	531300.86	406205.08	2022	27/06/2022	69158	1 Urbis LED	Teceo 40 LED 500mA	64 Watts	10.00 Metres	Galvanised Steel	
Y	16	STREET LIGHTING	NORTH SEA LANE	CLEETHORPES	531322.73	406219.97	2013	21/01/2013	69183	Urbis	AXIA 3.3 48 LED 540mA	78 Watts	10.00 Metres	Galvanised Steel	
Y	17	STREET LIGHTING	NORTH SEA LANE	CLEETHORPES	531345.01	406223.51	2013	21/01/2013	69184	Urbis	Teceo 40 LED 500mA	64 Watts	10.00 Metres	Galvanised Steel	
Y	18	STREET LIGHTING	NORTH SEA LANE	CLEETHORPES	531369.72	406216.53	2022	27/06/2022	69159	Urbis	AXIA 3.3 48 LED 540mA	78 Watts	10.00 Metres	Galvanised Steel	
Y	19	STREET LIGHTING	NORTH SEA LANE	CLEETHORPES	531393.43	406218.44	2008		54242	1 Urbis LED	Teceo 40 LED 500mA	64 Watts	10.00 Metres	Steel	
Y	20	STREET LIGHTING	NORTH SEA LANE	CLEETHORPES	531405.16	406232.63	2015		54243	1 Urbis LED	Teceo 40 LED 500mA	64 Watts	10.00 Metres	Galvanised Steel	
Y	21	STREET LIGHTING	NORTH SEA LANE	CLEETHORPES	531440.43	406236.92	2022	27/06/2022	69160	1 Urbis LED	Teceo 40 LED 500mA	64 Watts	10.00 Metres	Galvanised Steel	
Y	22	STREET LIGHTING	NORTH SEA LANE	CLEETHORPES	531473.62	406239.51	2022	27/06/2022	69161	1 Urbis LED	Teceo 40 LED 500mA	64 Watts	10.00 Metres	Galvanised Steel	
Y	23	STREET LIGHTING	NORTH SEA LANE	CLEETHORPES	531511.29	406233.33	2022	27/06/2022	69162	1 Urbis LED	Teceo 40 LED 500mA	64 Watts	10.00 Metres	Galvanised Steel	
Y	24	STREET LIGHTING	NORTH SEA LANE	CLEETHORPES	531538.22	406246.4	2015		54247	1 Urbis LED	Teceo 40 LED 500mA	64 Watts	10.00 Metres	Galvanised Steel	
Y	25	STREET LIGHTING	NORTH SEA LANE	CLEETHORPES	531538.22	406246.41	2022	27/06/2022	69163	1 Urbis LED	Teceo 40 LED 500mA	64 Watts	10.00 Metres	Galvanised Steel	
Y	26	STREET LIGHTING	NORTH SEA LANE	CLEETHORPES	531573.46	406239.01	2022	27/06/2022	69164	1 Urbis LED	Teceo 40 LED 500mA	64 Watts	10.00 Metres	Galvanised Steel	
Y	27	STREET LIGHTING	NORTH SEA LANE	CLEETHORPES	531607.69	406253.08	2022	27/06/2022	69165	1 Urbis LED	Teceo 40 LED 500mA	64 Watts	10.00 Metres	Galvanised Steel	
Y	28	STREET LIGHTING	NORTH SEA LANE	CLEETHORPES	531642.32	406256.83	2022	27/06/2022	69166	1 Urbis LED	Teceo 40 LED 500mA	64 Watts	10.00 Metres	Galvanised Steel	
Y	29	STREET LIGHTING	NORTH SEA LANE	CLEETHORPES	531677.36	406260.17	2022	27/06/2022	69167	1 Urbis LED	Teceo 40 LED 500mA	64 Watts	10.00 Metres	Galvanised Steel	
Y	30	STREET LIGHTING	NORTH SEA LANE	CLEETHORPES	531750.88	406267.46	2022	27/06/2022	69168	1 Urbis LED	Teceo 40 LED 500mA	64 Watts	10.00 Metres	Galvanised Steel	
Y	31	STREET LIGHTING	NORTH SEA LANE	CLEETHORPES	531784.71	406260.47	2022	27/06/2022	69169	1 Urbis LED	Teceo 40 LED 500mA	64 Watts	10.00 Metres	Galvanised Steel	
Y	32	STREET LIGHTING	NORTH SEA LANE	CLEETHORPES	531822.57	406274.95	2022	27/06/2022	69170	1 Urbis LED	Teceo 40 LED 500mA	64 Watts	10.00 Metres	Galvanised Steel	
Y	33	STREET LIGHTING	NORTH SEA LANE	CLEETHORPES	531852.91	406267.16	2022	27/06/2022	69171	1 Urbis LED	Teceo 40 LED 500mA	64 Watts	10.00 Metres	Galvanised Steel	
Y	34	STREET LIGHTING	NORTH SEA LANE	CLEETHORPES	531891.38	406281.85	2006		54257	1 Urbis LED	Teceo 40 LED 500mA	64 Watts	10.00 Metres	Stainless Steel	
Y	35	STREET LIGHTING	NORTH SEA LANE	CLEETHORPES	531926.62	406274.45	2022	27/06/2022	69172	1 Urbis LED	Teceo 40 LED 500mA	64 Watts	10.00 Metres	Galvanised Steel	
Y	36	STREET LIGHTING	NORTH SEA LANE	CLEETHORPES	531962.26	406289.34	2022	27/06/2022	69173	1 Urbis LED	Teceo 40 LED 500mA	64 Watts	10.00 Metres	Galvanised Steel	
Y	37	STREET LIGHTING	NORTH SEA LANE	CLEETHORPES	531999.21	406282.22	2022	27/06/2022	69174	1 Urbis LED	Teceo 40 LED 500mA	64 Watts	10.00 Metres	Galvanised Steel	
Y	38	STREET LIGHTING	NORTH SEA LANE	CLEETHORPES	532029.54	406295.93	2022	27/06/2022	69175	1 Urbis LED	Teceo 40 LED 500mA	64 Watts	10.00 Metres	Galvanised Steel	
Y	39	STREET LIGHTING	NORTH SEA LANE	CLEETHORPES	532065.23	406289.21	2022	27/06/2022	69176	1 Urbis LED	Teceo 40 LED 500mA	64 Watts	10.00 Metres	Galvanised Steel	
Y	40	STREET LIGHTING	NORTH SEA LANE	CLEETHORPES	532100.93	406302.87	2022	27/06/2022	69177	1 Urbis LED	Teceo 40 LED 500mA	64 Watts	10.00 Metres	Galvanised Steel	
Y	41	STREET LIGHTING	NORTH SEA LANE	CLEETHORPES	532136.75	406296.15	2022	27/06/2022	69178	1 Urbis LED	Teceo 40 LED 500mA	64 Watts	10.00 Metres	Galvanised Steel	
Y	42	STREET LIGHTING	NORTH SEA LANE	CLEETHORPES	532173.83	406299.75	2022	27/06/2022	69179	1 Urbis LED	Teceo 40 LED 500mA	64 Watts	10.00 Metres	Galvanised Steel	
Y	43	STREET LIGHTING	NORTH SEA LANE	CLEETHORPES	532209.02	406303.47	2022	27/06/2022	69180	1 Urbis LED	Teceo 40 LED 500mA	64 Watts	10.00 Metres	Galvanised Steel	
Y	44	STREET LIGHTING	NORTH SEA LANE	CLEETHORPES	532244.01	406307.11	2022	27/06/2022	69181	1 Urbis LED	Teceo 40 LED 500mA	64 Watts	10.00 Metres	Galvanised Steel	
Y	45	STREET LIGHTING	NORTH SEA LANE	CLEETHORPES	532271.44	406308.65	2022	27/06/2022	69182	1 Urbis LED	Teceo 40 LED 500mA	64 Watts	10.00 Metres	Galvanised Steel	
Y	1	STREET LIGHTING	CARLYLE CLOSE	CLEETHORPES	531083.54	406476.23	1961		45268	Urbis	Axia 16 LED 350mA	19 Watts	5.00 Metres	Galvanised Steel	
Y	2	STREET LIGHTING	CARLYLE CLOSE	CLEETHORPES	531092.4	406511.74	1961		45269	Urbis	Axia 16 LED 350mA	19 Watts	5.00 Metres	Galvanised Steel	
Y	1	STREET LIGHTING	GROSVENOR COURT	CLEETHORPES	531417.34	406403.84	2010		49930	Philips		21 Watts	6.00 Metres	Steel	
Y	2	STREET LIGHTING	GROSVENOR COURT	CLEETHORPES	531444.38	406405.67	2010		49931	Philips		21 Watts	6.00 Metres	Steel	
Y	1	STREET LIGHTING	CRANBOURNE CLOSE	CLEETHORPES	530713.63	406191.5	1997		46860	Urbis	Axia 16 LED 350mA	19 Watts	5.00 Metres	Galvanised Steel	
Y	2	STREET LIGHTING	CRANBOURNE CLOSE	CLEETHORPES	530743.42	406187.86	2022	12/05/2022	68886	Urbis	Axia 24 LED 500mA	28 Watts	6.00 Metres	Galvanised Steel	
Y	3	STREET LIGHTING	CRANBOURNE CLOSE	CLEETHORPES	530771.23	406198.04	1997		46862	Urbis	Axia 16 LED 350mA	19 Watts	5.00 Metres	Galvanised Steel	
Y	4	STREET LIGHTING	CRANBOURNE CLOSE	CLEETHORPES	530790.98	406185.31	1997		46863	Urbis	Axia 16 LED 350mA	19 Watts	5.00 Metres	Galvanised Steel	
Y	5	STREET LIGHTING	CRANBOURNE CLOSE	CLEETHORPES	530788.19	406159.94	1997		46864	Urbis	Axia 16 LED 350mA	19 Watts	5.00 Metres	Galvanised Steel	
Y	6	STREET LIGHTING	CRANBOURNE CLOSE	CLEETHORPES	530746.29	406172.09	1997		46865	Urbis	Axia 16 LED 350mA	19 Watts	5.00 Metres	Galvanised Steel	
Y	7	STREET LIGHTING	CRANBOURNE CLOSE	CLEETHORPES	530729.33	406145.32	1997		46866	Urbis	Axia 16 LED 350mA	19 Watts	5.00 Metres	Galvanised Steel	
Y	8	STREET LIGHTING	CRANBOURNE CLOSE	CLEETHORPES	530727.18	406121.84	1997		46867	Urbis	Axia 16 LED 350mA	19 Watts	5.00 Metres	Galvanised Steel	
Y	1	STREET LIGHTING	HAYLING MERE	CLEETHORPES	530834.49	406253.66	1993		50433	Urbis	Axia 16 LED 350mA	19 Watts	5.00 Metres	Galvanised Steel	
Y	2	STREET LIGHTING	HAYLING MERE	CLEETHORPES	530861.96	406268.54	1993		50434	Urbis	Axia 16 LED 350mA	19 Watts	5.00 Metres	Galvanised Steel	
Y	3	STREET LIGHTING	HAYLING MERE	CLEETHORPES	530894.74	406263.41	1993		50435	Urbis	Axia 16 LED 350mA	19 Watts	5.00 Metres	Galvanised Steel	
Y	4	STREET LIGHTING	HAYLING MERE	CLEETHORPES	530904.74	406239.42	1993		50436	Urbis	Axia 16 LED 350mA	19 Watts	5.00 Metres	Galvanised Steel	
Y	5	STREET LIGHTING	HAYLING MERE	CLEETHORPES	530903.86	406216.96	1993		50437	Urbis	Axia 16 LED 350mA	19 Watts	5.00 Metres	Galvanised Steel	
Y	1	STREET LIGHTING	MARLBOROUGH WAY	CLEETHORPES	530807.28	406255.3	1994		53365	1 Urbis LED	Axia 16 LED 500mA	28 Watts	5.00 Metres	Galvanised Steel	
Y	2	STREET LIGHTING	MARLBOROUGH WAY	CLEETHORPES	530770.7	406262.07	1994		53366	1 Urbis LED	Axia 16 LED 500mA	28 Watts	5.00 Metres	Galvanised Steel	
Y	3	STREET LIGHTING	MARLBOROUGH WAY	CLEETHORPES	530740.19	406254.34	1994		53367	1 Urbis LED	Axia 16 LED 500mA	28 Watts	5.00 Metres	Galvanised Steel	
Y	4	STREET LIGHTING	MARLBOROUGH WAY	CLEETHORPES	530718.42	406231.37	1994		53368	1 Urbis LED	Axia 16 LED 500mA	28 Watts	5.00 Metres	Galvanised Steel	
Y	5	STREET LIGHTING	MARLBOROUGH WAY	CLEETHORPES	530709.69	406204.66	1994		53369	1 Urbis LED	Axia 16 LED 500mA	28 Watts	5.00 Metres	Galvanised Steel	
Y	6	STREET LIGHTING	MARLBOROUGH WAY	CLEETHORPES	530692.35	406187.89	1994		53370	1 Urbis LED	Axia 16 LED 500mA	28 Watts	5.00 Metres	Galvanised Steel	
Y	7	STREET LIGHTING	MARLBOROUGH WAY	CLEETHORPES	530672.6	406164.54	1994		53371	1 Urbis LED	Axia 16 LED 500mA	28 Watts	5.00 Metres	Galvanised Steel	
Y	8	STREET LIGHTING	MARLBOROUGH WAY	CLEETHORPES	530642.22	406171.44	1994		53372	1 Urbis LED	Axia 16 LED 500mA	28 Watts	5.00 Metres	Galvanised Steel	
Y	9	STREET LIGHTING	MARLBOROUGH WAY	CLEETHORPES	530618.93	406170.61	1998		53373	1 Urbis LED	Axia 16 LED 500mA	28 Watts	5.00 Metres	Galvanised Steel	
Y	10	STREET LIGHTING	MARLBOROUGH WAY	CLEETHORPES	530601.46	406180.17	1999		53374	1 Urbis LED	Axia 16 LED 500mA	28 Watts	5.00 Metres	Galvanised Steel	

Y	11	STREET LIGHTING	MARLBOROUGH WAY	CLEETHORPES	530584.5	406187.96	1998		53375	1 Urbis LED	Axia 16 LED 500mA	28 Watts	5.00 Metres	Galvanised Steel	
Y	12	STREET LIGHTING	MARLBOROUGH WAY	CLEETHORPES	530581.21	406216.25	1998		53376	1 Urbis LED	Axia 16 LED 500mA	28 Watts	5.00 Metres	Galvanised Steel	
Y	13	STREET LIGHTING	MARLBOROUGH WAY	CLEETHORPES	530595.42	406244.66	2022	06/01/2022	68805	Urbis	Axia 24 LED 500mA	28 Watts	6.00 Metres	Galvanised Steel	
Y	14	STREET LIGHTING	MARLBOROUGH WAY	CLEETHORPES	530588.56	406276.31	1998		53378	1 Urbis LED	Axia 16 LED 500mA	28 Watts	5.00 Metres	Galvanised Steel	
Y	15	STREET LIGHTING	MARLBOROUGH WAY	CLEETHORPES	530601.34	406302.77	1998		53379	1 Urbis LED	Axia 16 LED 500mA	28 Watts	5.00 Metres	Galvanised Steel	
Y	16	STREET LIGHTING	MARLBOROUGH WAY	CLEETHORPES	530602.1	406334.33	1999		53380	1 Urbis LED	Axia 16 LED 500mA	28 Watts	5.00 Metres	Galvanised Steel	
Y	17	STREET LIGHTING	MARLBOROUGH WAY	CLEETHORPES	530586.66	406362.32	1999		53381	1 Urbis LED	Axia 16 LED 500mA	28 Watts	5.00 Metres	Galvanised Steel	
Y	18	STREET LIGHTING	MARLBOROUGH WAY	CLEETHORPES	530580.32	406392.89	2001		53382	1 Urbis LED	Axia 16 LED 500mA	28 Watts	5.00 Metres	Galvanised Steel	
Y	19	STREET LIGHTING	MARLBOROUGH WAY	CLEETHORPES	530573.19	406425.07	2001		53383	1 Urbis LED	Axia 16 LED 500mA	28 Watts	5.00 Metres	Galvanised Steel	
Y	20	STREET LIGHTING	MARLBOROUGH WAY	CLEETHORPES	530576.37	406453.38	2001		53384	1 Urbis LED	Axia 16 LED 500mA	28 Watts	5.00 Metres	Galvanised Steel	
Y	1	STREET LIGHTING	FOOTPATH BETWEEN	CLEETHORPES	530582.4	406064.02	2003		48764	1 Urbis LED	Axia 16 LED 500mA	28 Watts	5.00 Metres	Galvanised Steel	
Y	2	STREET LIGHTING	FOOTPATH BETWEEN	CLEETHORPES	530595.25	406109.07	2003		48765	1 Urbis LED	Axia 16 LED 500mA	28 Watts	5.00 Metres	Galvanised Steel	
Y	3	STREET LIGHTING	FOOTPATH BETWEEN	CLEETHORPES	530609.77	406152.72	2003		48766	1 Urbis LED	Axia 16 LED 500mA	28 Watts	5.00 Metres	Galvanised Steel	
Y	1	STREET LIGHTING	FOOTPATH BETWEEN	CLEETHORPES	530614.64	406322.24	1998		48767	Urbis	Axia 16 LED 350mA	19 Watts	5.00 Metres	Galvanised Steel	
Y	1	STREET LIGHTING	ARDEN VILLAGE	CLEETHORPES	530706.04	406247.54	1996		43318	Urbis	Axia 16 LED 350mA	19 Watts	5.00 Metres	Galvanised Steel	
Y	2	STREET LIGHTING	ARDEN VILLAGE	CLEETHORPES	530685.67	406265.7	1996		43319	Urbis	Axia 16 LED 350mA	19 Watts	5.00 Metres	Galvanised Steel	
Y	3	STREET LIGHTING	ARDEN VILLAGE	CLEETHORPES	530663.9	406221.91	1996		43320	Urbis	Axia 16 LED 350mA	19 Watts	5.00 Metres	Galvanised Steel	
Y	4	STREET LIGHTING	ARDEN VILLAGE	CLEETHORPES	530668.71	406241.91	1996		43321	Urbis	Axia 16 LED 350mA	19 Watts	5.00 Metres	Galvanised Steel	
Y	5	STREET LIGHTING	ARDEN VILLAGE	CLEETHORPES	530671.21	406274.22	1996		43322	Urbis	Axia 16 LED 350mA	19 Watts	5.00 Metres	Galvanised Steel	
Y	6	STREET LIGHTING	ARDEN VILLAGE	CLEETHORPES	530664.25	406283.4	1996		43323	Urbis	Axia 16 LED 350mA	19 Watts	5.00 Metres	Galvanised Steel	
Y	7	STREET LIGHTING	ARDEN VILLAGE	CLEETHORPES	530675.01	406304.22	1996		43324	Urbis	Axia 16 LED 350mA	19 Watts	5.00 Metres	Galvanised Steel	
Y	8	STREET LIGHTING	ARDEN VILLAGE	CLEETHORPES	530706.93	406282.57	1996		43325	Urbis	Axia 16 LED 350mA	19 Watts	5.00 Metres	Galvanised Steel	
Y	9	STREET LIGHTING	ARDEN VILLAGE	CLEETHORPES	530726.81	406290.48	1996		43326	Urbis	Axia 16 LED 350mA	19 Watts	5.00 Metres	Galvanised Steel	
Y	1	STREET LIGHTING	CHELTENHAM WAY	CLEETHORPES	530850.68	406431.23	1998		45759	Urbis	Axia 16 LED 350mA	19 Watts	5.00 Metres	Galvanised Steel	
Y	2	STREET LIGHTING	CHELTENHAM WAY	CLEETHORPES	530827.01	406449.02	1998		45760	Urbis	Axia 16 LED 350mA	19 Watts	5.00 Metres	Galvanised Steel	
Y	3	STREET LIGHTING	CHELTENHAM WAY	CLEETHORPES	530806.76	406450.47	1999		45761	Urbis	Axia 16 LED 350mA	19 Watts	5.00 Metres	Galvanised Steel	
Y	4	STREET LIGHTING	CHELTENHAM WAY	CLEETHORPES	530803.59	406469.02	1999		45762	Urbis	Axia 16 LED 350mA	19 Watts	5.00 Metres	Galvanised Steel	
Y	5	STREET LIGHTING	CHELTENHAM WAY	CLEETHORPES	530773.98	406464.84	1999		45763	Urbis	Axia 16 LED 350mA	19 Watts	5.00 Metres	Galvanised Steel	
Y	6	STREET LIGHTING	CHELTENHAM WAY	CLEETHORPES	530780.56	406481.11	1999		45764	Urbis	Axia 16 LED 350mA	19 Watts	5.00 Metres	Galvanised Steel	
Y	7	STREET LIGHTING	CHELTENHAM WAY	CLEETHORPES	530749.55	406480.04	1999		45765	Urbis	Axia 16 LED 350mA	19 Watts	5.00 Metres	Galvanised Steel	
Y	8	STREET LIGHTING	CHELTENHAM WAY	CLEETHORPES	530725.37	406456.56	1999		45766	Urbis	Axia 16 LED 350mA	19 Watts	5.00 Metres	Galvanised Steel	
Y	9	STREET LIGHTING	CHELTENHAM WAY	CLEETHORPES	530699.04	406451.18	1999		45767	Urbis	Axia 16 LED 350mA	19 Watts	5.00 Metres	Galvanised Steel	
Y	10	STREET LIGHTING	CHELTENHAM WAY	CLEETHORPES	530670.44	406466.94	1999		45768	Urbis	Axia 16 LED 350mA	19 Watts	5.00 Metres	Galvanised Steel	
Y	11	STREET LIGHTING	CHELTENHAM WAY	CLEETHORPES	530666.76	406479.85	1999		45769	Urbis	Axia 16 LED 350mA	19 Watts	5.00 Metres	Galvanised Steel	
Y	12	STREET LIGHTING	CHELTENHAM WAY	CLEETHORPES	530640.44	406468.27	1999		45770	Urbis	Axia 16 LED 350mA	19 Watts	5.00 Metres	Galvanised Steel	
Y	13	STREET LIGHTING	CHELTENHAM WAY	CLEETHORPES	530602.86	406467.2	2001		45771	Urbis	Axia 16 LED 350mA	19 Watts	5.00 Metres	Galvanised Steel	
Y	14	STREET LIGHTING	CHELTENHAM WAY	CLEETHORPES	530573.23	406476.98	2001		45772	Urbis	Axia 16 LED 350mA	19 Watts	5.00 Metres	Galvanised Steel	
Y	15	STREET LIGHTING	CHELTENHAM WAY	CLEETHORPES	530542.51	406475.09	2001		45773	Urbis	Axia 16 LED 350mA	19 Watts	5.00 Metres	Galvanised Steel	
Y	16	STREET LIGHTING	CHELTENHAM WAY	CLEETHORPES	530514.91	406483.76	2001		45774	Urbis	Axia 16 LED 350mA	19 Watts	5.00 Metres	Galvanised Steel	
Y	17	STREET LIGHTING	CHELTENHAM WAY	CLEETHORPES	530481.45	406483.32	2001		45775	Urbis	Axia 16 LED 350mA	19 Watts	5.00 Metres	Galvanised Steel	
Y	18	STREET LIGHTING	CHELTENHAM WAY	CLEETHORPES	530462.69	406466.78	2019	11/02/2019	67322	Urbis	Axia 16 LED 350mA	19 Watts	6.00 Metres	Galvanised Steel	
Y	19	STREET LIGHTING	CHELTENHAM WAY	CLEETHORPES	530460.52	406437.7	2001		45777	Urbis	Axia 16 LED 350mA	19 Watts	5.00 Metres	Galvanised Steel	
Y	20	STREET LIGHTING	CHELTENHAM WAY	CLEETHORPES	530472.43	406413.44	2001		45778	Urbis	Axia 16 LED 350mA	19 Watts	5.00 Metres	Galvanised Steel	
Y	21	STREET LIGHTING	CHELTENHAM WAY	CLEETHORPES	530469.63	406384.85	2023	02/03/2023	69197	Urbis	Axia 16 LED 350mA	19 Watts	6.00 Metres	Galvanised Steel	
Y	1	STREET LIGHTING	KEMPTON VALE	CLEETHORPES	530682.16	406399.58	2004		51522	Urbis	Axia 16 LED 350mA	19 Watts	6.00 Metres	Stainless Steel	
Y	2	STREET LIGHTING	KEMPTON VALE	CLEETHORPES	530707.68	406395.92	2004		51523	Urbis	Axia 16 LED 350mA	19 Watts	6.00 Metres	Stainless Steel	
Y	3	STREET LIGHTING	KEMPTON VALE	CLEETHORPES	530736.89	406384.31	2004		51524	Urbis	Axia 16 LED 350mA	19 Watts	6.00 Metres	Stainless Steel	
Y	4	STREET LIGHTING	KEMPTON VALE	CLEETHORPES	530737.52	406358.68	2004		51525	Urbis	Axia 16 LED 350mA	19 Watts	6.00 Metres	Stainless Steel	
Y	1	STREET LIGHTING	DELAMERE COURT	CLEETHORPES	530652.87	406158.84	1992		47431	1 Urbis LED	Axia 16 LED 500mA	28 Watts	5.00 Metres	Galvanised Steel	
Y	2	STREET LIGHTING	DELAMERE COURT	CLEETHORPES	530644.14	406132.45	1992		47432	1 Urbis LED	Axia 16 LED 500mA	28 Watts	5.00 Metres	Galvanised Steel	
Y	1	STREET LIGHTING	LAMBOURN COURT	CLEETHORPES	530790.05	406449.65	1999		52219	Urbis	Axia 16 LED 350mA	19 Watts	5.00 Metres	Galvanised Steel	
Y	2	STREET LIGHTING	LAMBOURN COURT	CLEETHORPES	530771.32	406425.79	1999		52220	Urbis	Axia 16 LED 350mA	19 Watts	5.00 Metres	Galvanised Steel	
Y	1	STREET LIGHTING	GOODWOOD LANE	CLEETHORPES	530666.49	406445.47	2004		49373	Urbis	Axia 16 LED 350mA	19 Watts	6.00 Metres	Stainless Steel	
Y	2	STREET LIGHTING	GOODWOOD LANE	CLEETHORPES	530655.36	406419.78	2004		49374	Urbis	Axia 16 LED 350mA	19 Watts	6.00 Metres	Stainless Steel	
Y	3	STREET LIGHTING	GOODWOOD LANE	CLEETHORPES	530664.75	406392.4	2004		49375	Urbis	Axia 16 LED 350mA	19 Watts	6.00 Metres	Stainless Steel	
Y	4	STREET LIGHTING	GOODWOOD LANE	CLEETHORPES	530675.26	406380.51	2004		49376	Urbis	Axia 16 LED 350mA	19 Watts	6.00 Metres	Stainless Steel	
Y	5	STREET LIGHTING	GOODWOOD LANE	CLEETHORPES	530669.63	406360.4	2004		49377	Urbis	Axia 16 LED 350mA	19 Watts	6.00 Metres	Stainless Steel	
Y	6	STREET LIGHTING	GOODWOOD LANE	CLEETHORPES	530678.88	406335.88	2004		49378	Urbis	Axia 16 LED 350mA	19 Watts	6.00 Metres	Stainless Steel	
Y	1	STREET LIGHTING	STRANG WALK	HUMBERSTON	530978.34	405704.29	1985		58521	Urbis	Axia 16 LED 350mA	19 Watts	6.00 Metres	Galvanised Steel	
Y	2	STREET LIGHTING	STRANG WALK	HUMBERSTON	531000.92	405710.33	1985		58522	Urbis	Axia 16 LED 350mA	19 Watts	6.00 Metres	Galvanised Steel	
Y	3	STREET LIGHTING	STRANG WALK	HUMBERSTON	531029.53	405717.74	1985		58523	Urbis	Axia 16 LED 350mA	19 Watts	6.00 Metres	Galvanised Steel	
Y	4	STREET LIGHTING	STRANG WALK	HUMBERSTON	531055.48	405724.76	1985		58524	Urbis	Axia 16 LED 350mA	19 Watts	6.00 Metres	Galvanised Steel	
Y	5	STREET LIGHTING	STRANG WALK	HUMBERSTON	531086.74	405733.43	1985		58525	Urbis	Axia 16 LED 350mA	19 Watts	6.00 Metres	Galvanised Steel	
Y	6	STREET LIGHTING	STRANG WALK	HUMBERSTON	531115.56	405737.54	1985		58526	Urbis	Axia 16 LED 350mA	19 Watts	6.00 Metres	Galvanised Steel	
Y	1	STREET LIGHTING	ASHWOOD DRIVE	HUMBERSTON	531434.82	406037.36	1997		43442	1 Urbis LED	Axia 16 LED 500mA	28 Watts	6.00 Metres	Galvanised Steel	
Y	2	STREET LIGHTING	ASHWOOD DRIVE	HUMBERSTON	531443.55	406004.01	1997		43443	1 Urbis LED	Axia 16 LED 500mA	28 Watts	6.00 Metres	Galvanised Steel	
Y	3	STREET LIGHTING	ASHWOOD DRIVE	HUMBERSTON	531453.17	405968.32	1997		43444	1 Urbis LED	Axia 16 LED 500mA	28 Watts	6.00 Metres	Galvanised Steel	
Y	4	STREET LIGHTING	ASHWOOD DRIVE	HUMBERSTON	531463.17	405930.85	1997		43445	1 Urbis LED	Axia 16 LED 500mA	28 Watts	6.00 Metres	Galvanised Steel	
Y	5	STREET LIGHTING	ASHWOOD DRIVE	HUMBERSTON	531458.87	405905.41	1997		43446	1 Urbis LED	Axia 16 LED 500mA	28 Watts	6.00 Metres	Galvanised Steel	
Y	6	STREET LIGHTING	ASHWOOD DRIVE	HUMBERSTON	531470.01	405862.69	1997		43447	1 Urbis LED	Axia 16 LED 500mA	28 Watts	6.00 Metres	Galvanised Steel	
Y	7	STREET LIGHTING	ASHWOOD DRIVE	HUMBERSTON	531478.62	405829.91	1997		43448	1 Urbis LED	Axia 16 LED 500mA	28 Watts	6.00 Metres	Galvanised Steel	
Y	1	STREET LIGHTING	BURCOM AVENUE	HUMBERSTON	531298	405999.4	2014	29/07/2014	62918	Urbis	Axia 16 LED 350mA	19 Watts	6.00 Metres	Galvanised Steel	
Y	2	STREET LIGHTING	BURCOM AVENUE	HUMBERSTON	531333.95	405970.6	2014	29/07/2014	62919	Urbis	Axia 16 LED 350mA	19 Watts	6.00 Metres	Galvanised Steel	
Y	3	STREET LIGHTING	BURCOM AVENUE	HUMBERSTON	531381.92	405981.74	2014	29/07/2014	62920	1 Urbis LED	Axia 16 LED 500mA	28 Watts	6.00 Metres	Galvanised Steel	
Y	1	STREET LIGHTING	CARRINGTON DRIVE	HUMBERSTON	531650.16	406235.16	2000		45366	Urbis	Axia 16 LED 350mA	19 Watts	6.00 Metres	Galvanised Steel	
Y	2	STREET LIGHTING	CARRINGTON DRIVE	HUMBERSTON	531644.2	406206.31	2000		45367	Urbis	Axia 16 LED 350mA	19 Watts	6.00 Metres	Galvanised Steel	
Y	3	STREET LIGHTING	CARRINGTON DRIVE	HUMBERSTON	531660.7	406175.92	2000		45368	Urbis	Axia 16 LED 350mA	19 Watts	6.00 Metres	Galvanised Steel	
Y	4	STREET LIGHTING	CARRINGTON DRIVE	HUMBERSTON	531654.88	406143.4	2000		45369	Urbis	Axia 16 LED 350mA	19 Watts	6.00 Metres	Galvanised Steel	
Y	5	STREET LIGHTING	CARRINGTON DRIVE	HUMBERSTON	531670.42	406118.37	2000		45370	Urbis	Axia 16 LED 350mA	19 Watts	6.00 Metres	Galvanised Steel	
Y	6	STREET LIGHTING	CARRINGTON DRIVE	HUMBERSTON	531671.82	406088.44	2000		45371	Urbis	Axia 16 LED 350mA	19 Watts	6.00 Metres	Galvanised Steel	
Y	7	STREET LIGHTING	CARRINGTON DRIVE	HUMBERSTON	531659.29	406074.45	2000		45372	Urbis	Axia 16 LED 350mA	19 Watts	6.00 Metres	Galvanised Steel	
Y	8	STREET LIGHTING	CARRINGTON DRIVE	HUMBERSTON	531674.47	406067.23	2000		45373	Urbis	Axia 16 LED 350mA	19 Watts	6.00 Metres	Galvanised Steel	
Y	9	STREET LIGHTING	CARRINGTON DRIVE	HUMBERSTON	531675.65	406041.75	2000		45374	Urbis	Axia 16 LED 350mA	19 Watts	6.00 Metres	Galvanised Steel	
Y	10	STREET LIGHTING	CARRINGTON DRIVE	HUMBERSTON	531688.14	406018.95	2000		45375	Urbis	Axia 16 LED 350mA	19 Watts	6.00 Metres	Galvanised Steel	
Y	11	STREET LIGHTING	CARRINGTON DRIVE	HUMBERSTON	531685.01	405992.86	2000		45376	Urbis	Axia 16 LED 350mA	19 Watts	6.00 Metres	Galvanised Steel	
Y	12	STREET LIGHTING	CARRINGTON DRIVE	HUMBERSTON	531698.57	405965.76	2000		45377	Urbis	Axia 16 LED 350mA	19 Watts	6.00 Metres	Galvanised Steel	
Y	13	STREET LIGHTING	CARRINGTON DRIVE	HUMBERSTON	531704.51	405936.37	2000		45378	Urbis	Axia 16 LED 350mA	19 Watts	6.00 Metres	Galvanised Steel	
Y	14	STREET LIGHTING	CARRINGTON DRIVE	HUMBERSTON	531714.27	405910.63	2000		45379	Urbis	Axia 16 LED 350mA	19 Watts	6.00 Metres	Galvanised Steel	
Y	15	STREET LIGHTING	CARRINGTON DRIVE	HUMBERSTON	531711.39	405878.37	2000		45380	Urbis	Axia 16 LED 350mA	19 Watts	6.00 Metres	Galvanised Steel	
Y	1	STREET LIGHTING	CHIPPENDALE CLOSE	HUMBERSTON	531109.49	405864.43	1994		45930	1 Urbis LED	Axia 16 LED 500mA	28 Watts	5.00 Metres	Galvanised Steel	
Y	2	STREET LIGHTING	CHIPPENDALE CLOSE	HUMBERSTON	531145.19	405870.95	2014		45931	1 Urbis LED	Axia 16 LED 500mA	28 Watts	6.00 Metres	Galvanised Steel	
Y	1	STREET LIGHTING	CHURCH AVENUE	HUMBERSTON	530886.42	406064.11	1997		45934	1 Urbis LED	Teceo 48 LED 700mA	104 Watts	10.00 Metres	Galvanised Steel	
Y	2	STREET LIGHTING	CHURCH AVENUE	HUMBERSTON	530877.43	406043.67	1997		45935	1 Urbis LED	Teceo 48 LED 700mA	104 Watts	10.00 Metres	Galvanised Steel	
Y	3	STREET LIGHTING	CHURCH AVENUE	HUMBERSTON	530896.68	406024.69	2007		45936	1 Urbis LED	Teceo 48 LED 700mA	104 Watts	10.00 Metres	Steel	
Y	4	STREET LIGHTING	CHURCH AVENUE	HUMBERSTON	530894.22	405976	2007		45937	1 Urbis LED	Teceo 48 LED 700mA	104 Watts	10.00 Metres	Steel	
Y	5	STREET LIGHTING	CHURCH AVENUE	HUMBERSTON	530912.85	405942.89	1997		45938	1 Urbis LED	Teceo 48 LED 700mA	104 Watts	10.00 Metres	Galvanised Steel	
Y	6	STREET LIGHTING	CHURCH AVENUE	HUMBERSTON	530910.04	405909.84	1997		45939	1 Urbis LED	Teceo 48 LED 700mA	104 Watts	10.00 Metres	Galvanised Steel	
Y	7	STREET LIGHTING	CHURCH AVENUE	HUMBERSTON	530928.7	405878.96	1997		45940	1 Urbis LED	Teceo 48 LED 700mA	104 Watts	10.00 Metres	Galvanised Steel	
Y	8	STREET LIGHTING	CHURCH AVENUE	HUMBERSTON	530926.16	405841.37	1997		45941	1 Urbis LED	Teceo 48 LED 700mA	104 Watts	10.00 Metres	Galvanised Steel	
Y	9	STREET LIGHTING	CHURCH AVENUE	HUMBERSTON	530944.97	405811.9	1997		45942	1 Urbis LED	Teceo 48 LED 700mA	104 Watts	10.00 Metres	Galvanised Steel	
Y	10	STREET LIGHTING	CHURCH AVENUE	HUMBERSTON	530941.93	405777.97	1997		45943	1 Urbis LED	Teceo 48 LED 700mA	104 Watts	10.00 Metres	Galvanised Steel	
Y	11	STREET LIGHTING	CHURCH AVENUE	HUMBERSTON	530951.05	405746.26	1997		45944	1 Urbis LED	Teceo 48 LED 700mA	104 Watts	10.00 Metres	Galvanised Steel	
Y	12	STREET LIGHTING	CHURCH AVENUE	HUMBERSTON	530969.09	405711.5	1997		45945	1 Urbis LED	Teceo 48 LED 700mA	104 Watts	10.00 Metres	Galvanised Steel	
Y	13	STREET LIGHTING	CHURCH AVENUE	HUMBERSTON	530966.64	405674.49	1997		45946	1 Urbis LED	Teceo 48 LED 700mA	104 Watts	10.00 Metres	Galvanised Steel	
Y	14	STREET LIGHTING	CHURCH AVENUE	HUMBERSTON	530974.99	405640	1997		45947	1 Urbis LED	Teceo 48 LED 700mA	104 Watts	10.00 Metres	Galvanised Steel	
Y	15	STREET LIGHTING	CHURCH AVENUE	HUMBERSTON	530983.35	405605.76	1997		45948	1 Urbis LED	Teceo 48 LED 700mA	104 Watts	10.00 Metres	Galvanised Steel	
Y	16	STREET LIGHTING	CHURCH AVENUE	HUMBERSTON	531001.22	405575.82	1997		45949	1 Urbis LED	Teceo 48 LED 700mA	104 Watts	10.00 Metres	Galvanised Steel	
Y	17	STREET LIGHTING	CHURCH AVENUE	HUMBERSTON	531002.07	405542.95	2021	16/12/2021	68780	Urbis	Teceo 48 LED 700mA	104 Watts	12.00 Metres	Galvanised Steel	
Y	18	STREET LIGHTING	CHURCH AVENUE	HUMBERSTON	531020.29	405516.11	1997		45951	1 Urbis LED	Teceo 48 LED 700mA	104 Watts	10.00 Metres	Galvanised Steel	
Y	19	STREET LIGHTING	CHURCH AVENUE	HUMBERSTON	531018.14	405483.58	1997		45952	1 Urbis LED	Teceo 48 LED 700mA	104 Watts	10.00 Metres	Galvanised Steel	

Y	20	STREET LIGHTING	CHURCH AVENUE	HUMBERSTON	531038.9	405454.98	1997		45953	1 Urbis LED	Teceo 48 LED 700mA	104 Watts	10.00 Metres	Galvanised Steel	
Y	21	STREET LIGHTING	CHURCH AVENUE	HUMBERSTON	531045.36	405425.04	1997		45954	1 Urbis LED	Teceo 48 LED 700mA	104 Watts	10.00 Metres	Galvanised Steel	
Y	22	STREET LIGHTING	CHURCH AVENUE	HUMBERSTON	531053.08	405390.42	1997		45955	1 Urbis LED	Teceo 48 LED 700mA	104 Watts	10.00 Metres	Galvanised Steel	
Y	23	STREET LIGHTING	CHURCH AVENUE	HUMBERSTON	531056.75	405353.84	1997		45956	1 Urbis LED	Teceo 48 LED 700mA	104 Watts	10.00 Metres	Galvanised Steel	
Y	24	STREET LIGHTING	CHURCH AVENUE	HUMBERSTON	531041.69	405337.83	1997		45957	1 Urbis LED	Teceo 48 LED 700mA	104 Watts	10.00 Metres	Galvanised Steel	
Y	25	STREET LIGHTING	CHURCH AVENUE	HUMBERSTON	531060.8	405322.58	1997		45958	1 Urbis LED	Teceo 48 LED 700mA	104 Watts	10.00 Metres	Galvanised Steel	
Y	26	STREET LIGHTING	CHURCH AVENUE	HUMBERSTON	531045.61	405302.64	1997		45959	1 Urbis LED	Teceo 48 LED 700mA	104 Watts	10.00 Metres	Galvanised Steel	
Y	27	STREET LIGHTING	CHURCH AVENUE	HUMBERSTON	531023.34	405311.82	1998		45960	1 Urbis LED	Teceo 48 LED 700mA	104 Watts	10.00 Metres	Galvanised Steel	
Y	28	STREET LIGHTING	CHURCH AVENUE	HUMBERSTON	531020.19	405290.69	1998		45961	1 Urbis LED	Teceo 48 LED 700mA	104 Watts	10.00 Metres	Galvanised Steel	
Y	29	STREET LIGHTING	CHURCH AVENUE	HUMBERSTON	530998.11	405282.79	1998		45962	1 Urbis LED	Teceo 48 LED 700mA	104 Watts	10.00 Metres	Galvanised Steel	
Y	30	STREET LIGHTING	CHURCH AVENUE	HUMBERSTON	530975.63	405290.48	1998		45963	1 Urbis LED	Teceo 48 LED 700mA	104 Watts	10.00 Metres	Galvanised Steel	
Y	31	STREET LIGHTING	CHURCH AVENUE	HUMBERSTON	530952.49	405276.15	1998		45964	1 Urbis LED	Teceo 48 LED 700mA	104 Watts	10.00 Metres	Galvanised Steel	
Y	32	STREET LIGHTING	CHURCH AVENUE	HUMBERSTON	530951.53	405256.96	1998		45965	1 Urbis LED	Teceo 48 LED 700mA	104 Watts	10.00 Metres	Stainless Steel	
Y	33	STREET LIGHTING	CHURCH AVENUE	HUMBERSTON	530938.43	405237.95	1998		45966	1 Urbis LED	Teceo 48 LED 700mA	104 Watts	10.00 Metres	Galvanised Steel	
Y	1	STREET LIGHTING	CHURCH LANE	HUMBERSTON	531066.55	405298.67	1978		45990	1 Urbis LED	Teceo 16 LED 500mA	28 Watts	8.00 Metres	Galvanised Steel	
Y	2	STREET LIGHTING	CHURCH LANE	HUMBERSTON	531111.87	405314.43	2014		45991	1 Urbis LED	Axia 16 LED 500mA	28 Watts	6.00 Metres	Galvanised Steel	
Y	3	STREET LIGHTING	CHURCH LANE	HUMBERSTON	531144.52	405338.73	2014		45992	1 Urbis LED	Axia 16 LED 500mA	28 Watts	6.00 Metres	Galvanised Steel	
Y	4	STREET LIGHTING	CHURCH LANE	HUMBERSTON	531162.17	405361.04	2014		45993	1 Urbis LED	Axia 16 LED 500mA	28 Watts	6.00 Metres	Galvanised Steel	
Y	5	STREET LIGHTING	CHURCH LANE	HUMBERSTON	531165.94	405393.13	2014		45994	1 Urbis LED	Axia 16 LED 500mA	28 Watts	6.00 Metres	Galvanised Steel	
Y	6	STREET LIGHTING	CHURCH LANE	HUMBERSTON	531183.28	405406.1	2014		45995	1 Urbis LED	Axia 16 LED 500mA	28 Watts	6.00 Metres	Galvanised Steel	
Y	7	STREET LIGHTING	CHURCH LANE	HUMBERSTON	531203.66	405420.91	2014		45996	1 Urbis LED	Axia 16 LED 500mA	28 Watts	6.00 Metres	Galvanised Steel	
Y	8	STREET LIGHTING	CHURCH LANE	HUMBERSTON	531225.43	405434.77	2014		45997	1 Urbis LED	Axia 16 LED 500mA	28 Watts	6.00 Metres	Galvanised Steel	
Y	9	STREET LIGHTING	CHURCH LANE	HUMBERSTON	531249.61	405445.59	2014		45998	1 Urbis LED	Axia 16 LED 500mA	28 Watts	6.00 Metres	Galvanised Steel	
Y	10	STREET LIGHTING	CHURCH LANE	HUMBERSTON	531285.18	405452.92	2013		45999	1 Urbis LED	Axia 16 LED 500mA	28 Watts	6.00 Metres	Galvanised Steel	
Y	11	STREET LIGHTING	CHURCH LANE	HUMBERSTON	531319.36	405458.05	2014		46000	1 Urbis LED	Axia 16 LED 500mA	28 Watts	6.00 Metres	Galvanised Steel	
Y	12	STREET LIGHTING	CHURCH LANE	HUMBERSTON	531359.1	405465.33	1963		46001	1 Urbis LED	Axia 16 LED 500mA	28 Watts	5.00 Metres	Concrete	
Y	13	STREET LIGHTING	CHURCH LANE	HUMBERSTON	531096.11	405328.79	2017		66871	1 Urbis LED	Teceo 24 LED 500mA	40 Watts	6.00 Metres	Galvanised Steel	
Y	14	STREET LIGHTING	CHURCH LANE	HUMBERSTON	531112.81	405335.52	2017		66872	1 Urbis LED	Teceo 24 LED 500mA	40 Watts	6.00 Metres	Galvanised Steel	
Y	15	STREET LIGHTING	CHURCH LANE	HUMBERSTON	531089.25	405345.42	2017		66873	1 Urbis LED	Teceo 24 LED 500mA	40 Watts	6.00 Metres	Galvanised Steel	
Y	16	STREET LIGHTING	CHURCH LANE	HUMBERSTON	531110.62	405348.25	2017		66874	1 Urbis LED	Teceo 24 LED 500mA	40 Watts	6.00 Metres	Galvanised Steel	
Y	1	STREET LIGHTING	FIELDHOUSE ROAD	HUMBERSTON	531153.03	405596.2	1993		48521	1 Urbis LED	Axia 16 LED 500mA	28 Watts	6.00 Metres	Galvanised Steel	
Y	2	STREET LIGHTING	FIELDHOUSE ROAD	HUMBERSTON	531147.12	405617.28	1993		48522	1 Urbis LED	Axia 16 LED 500mA	28 Watts	6.00 Metres	Galvanised Steel	
Y	3	STREET LIGHTING	FIELDHOUSE ROAD	HUMBERSTON	531137.25	405652.3	1993		48523	1 Urbis LED	Axia 16 LED 500mA	28 Watts	6.00 Metres	Galvanised Steel	
Y	4	STREET LIGHTING	FIELDHOUSE ROAD	HUMBERSTON	531129.49	405680.62	2024	29/04/2024	69897	Urbis	Axia 24 LED 500mA	28 Watts	6.00 Metres	Galvanised Steel	
Y	5	STREET LIGHTING	FIELDHOUSE ROAD	HUMBERSTON	531124.96	405709.58	2005		48525	1 Urbis LED	Axia 16 LED 500mA	28 Watts	6.00 Metres	Stainless Steel	
Y	6	STREET LIGHTING	FIELDHOUSE ROAD	HUMBERSTON	531148.64	405734.35	1993		48526	1 Urbis LED	Axia 16 LED 500mA	28 Watts	6.00 Metres	Galvanised Steel	
Y	7	STREET LIGHTING	FIELDHOUSE ROAD	HUMBERSTON	531166.11	405759.41	1993		48527	1 Urbis LED	Axia 16 LED 500mA	28 Watts	6.00 Metres	Galvanised Steel	
Y	8	STREET LIGHTING	FIELDHOUSE ROAD	HUMBERSTON	531187.2	405783.02	2024	05/01/2024	69788	Urbis	Axia 24 LED 500mA	28 Watts	6.00 Metres	Galvanised Steel	
Y	9	STREET LIGHTING	FIELDHOUSE ROAD	HUMBERSTON	531196.74	405809.78	1993		48529	1 Urbis LED	Axia 16 LED 500mA	28 Watts	6.00 Metres	Galvanised Steel	
Y	10	STREET LIGHTING	FIELDHOUSE ROAD	HUMBERSTON	531208.64	405838.07	1993		48530	1 Urbis LED	Axia 16 LED 500mA	28 Watts	6.00 Metres	Galvanised Steel	
Y	11	STREET LIGHTING	FIELDHOUSE ROAD	HUMBERSTON	531224.21	405858.52	2004		48531	1 Urbis LED	Axia 16 LED 500mA	28 Watts	6.00 Metres	Stainless Steel	
Y	12	STREET LIGHTING	FIELDHOUSE ROAD	HUMBERSTON	531235.98	405888.39	1993		48532	1 Urbis LED	Axia 16 LED 500mA	28 Watts	6.00 Metres	Galvanised Steel	
Y	13	STREET LIGHTING	FIELDHOUSE ROAD	HUMBERSTON	531237.12	405919.15	1993		48533	1 Urbis LED	Axia 16 LED 500mA	28 Watts	6.00 Metres	Galvanised Steel	
Y	14	STREET LIGHTING	FIELDHOUSE ROAD	HUMBERSTON	531229.74	405943.63	2019	13/11/2019	67702	Urbis	Axia 24 LED 500mA	28 Watts	6.00 Metres	Galvanised Steel	
Y	15	STREET LIGHTING	FIELDHOUSE ROAD	HUMBERSTON	531231.17	405982.18	1993		48535	1 Urbis LED	Axia 16 LED 500mA	28 Watts	6.00 Metres	Galvanised Steel	
Y	16	STREET LIGHTING	FIELDHOUSE ROAD	HUMBERSTON	531221.83	406010.7	2016		48536	1 Urbis LED	Axia 16 LED 500mA	28 Watts	6.00 Metres	Galvanised Steel	
Y	17	STREET LIGHTING	FIELDHOUSE ROAD	HUMBERSTON	531219.72	406037.85	1993		48537	1 Urbis LED	Axia 16 LED 500mA	28 Watts	6.00 Metres	Galvanised Steel	
Y	18	STREET LIGHTING	FIELDHOUSE ROAD	HUMBERSTON	531220.99	406068.29	1993		48538	1 Urbis LED	Axia 16 LED 500mA	28 Watts	6.00 Metres	Galvanised Steel	
Y	19	STREET LIGHTING	FIELDHOUSE ROAD	HUMBERSTON	531207.95	406094.37	1993		48539	1 Urbis LED	Axia 16 LED 500mA	28 Watts	6.00 Metres	Galvanised Steel	
Y	20	STREET LIGHTING	FIELDHOUSE ROAD	HUMBERSTON	531206.69	406123.54	1998		48540	1 Urbis LED	Axia 16 LED 500mA	28 Watts	6.00 Metres	Galvanised Steel	
Y	21	STREET LIGHTING	FIELDHOUSE ROAD	HUMBERSTON	531200.23	406151.52	1995		48541	1 Urbis LED	Axia 16 LED 500mA	28 Watts	6.00 Metres	Galvanised Steel	
Y	1	STREET LIGHTING	FOREST WAY	HUMBERSTON	531702.35	406047.77	1990		48863	Urbis	Axia 16 LED 350mA	19 Watts	5.00 Metres	Galvanised Steel	
Y	2	STREET LIGHTING	FOREST WAY	HUMBERSTON	531736.78	406045.81	1990		48864	Urbis	Axia 16 LED 350mA	19 Watts	5.00 Metres	Galvanised Steel	
Y	3	STREET LIGHTING	FOREST WAY	HUMBERSTON	531770.95	406052.07	1990		48865	Urbis	Axia 16 LED 350mA	19 Watts	6.00 Metres	Galvanised Steel	
Y	4	STREET LIGHTING	FOREST WAY	HUMBERSTON	531799.81	406066.44	1990		48866	Urbis	Axia 16 LED 350mA	19 Watts	5.00 Metres	Galvanised Steel	
Y	5	STREET LIGHTING	FOREST WAY	HUMBERSTON	531828.04	406071.5	2007		48867	Urbis	Axia 16 LED 350mA	19 Watts	6.00 Metres	Steel	
Y	6	STREET LIGHTING	FOREST WAY	HUMBERSTON	531856.78	406055.17	1990		48868	Urbis	Axia 16 LED 350mA	19 Watts	5.00 Metres	Galvanised Steel	
Y	7	STREET LIGHTING	FOREST WAY	HUMBERSTON	531871.18	406055.81	1990		48869	Urbis	Axia 16 LED 350mA	19 Watts	5.00 Metres	Steel	
Y	8	STREET LIGHTING	FOREST WAY	HUMBERSTON	531904.09	406062.83	1990		48870	Urbis	Axia 16 LED 350mA	19 Watts	5.00 Metres	Galvanised Steel	
Y	9	STREET LIGHTING	FOREST WAY	HUMBERSTON	531927.64	406066.69	1990		48871	Urbis	Axia 16 LED 350mA	19 Watts	5.00 Metres	Galvanised Steel	
Y	10	STREET LIGHTING	FOREST WAY	HUMBERSTON	531876.75	406031.79	1990		48872	Urbis	Axia 16 LED 350mA	19 Watts	5.00 Metres	Galvanised Steel	
Y	11	STREET LIGHTING	FOREST WAY	HUMBERSTON	531881.39	406004.52	2006		48873	Urbis	Axia 16 LED 350mA	19 Watts	6.00 Metres	Stainless Steel	
Y	12	STREET LIGHTING	FOREST WAY	HUMBERSTON	531897.38	405970.4	1990		48874	Urbis	Axia 16 LED 350mA	19 Watts	5.00 Metres	Galvanised Steel	
Y	13	STREET LIGHTING	FOREST WAY	HUMBERSTON	531893.33	405943.64	1990		48875	Urbis	Axia 16 LED 350mA	19 Watts	5.00 Metres	Galvanised Steel	
Y	14	STREET LIGHTING	FOREST WAY	HUMBERSTON	531899.28	405913.27	1990		48876	Urbis	Axia 16 LED 350mA	19 Watts	5.00 Metres	Galvanised Steel	
Y	15	STREET LIGHTING	FOREST WAY	HUMBERSTON	531915.61	405927.01	1990		48877	Urbis	Axia 16 LED 350mA	19 Watts	5.00 Metres	Galvanised Steel	
Y	16	STREET LIGHTING	FOREST WAY	HUMBERSTON	531944.6	405931.25	1990		48878	Urbis	Axia 16 LED 350mA	19 Watts	5.00 Metres	Galvanised Steel	
Y	17	STREET LIGHTING	FOREST WAY	HUMBERSTON	531973.12	405927.93	2018	08/06/2018	69883	Urbis	Axia 16 LED 500mA	28 Watts	6.00 Metres	Galvanised Steel	
Y	18	STREET LIGHTING	FOREST WAY	HUMBERSTON	531996	405931.71	2018	08/06/2018	69884	Urbis	Axia 16 LED 500mA	28 Watts	6.00 Metres	Galvanised Steel	
Y	19	STREET LIGHTING	FOREST WAY	HUMBERSTON	532025.81	405958.31	2018	08/06/2018	69885	Urbis	Axia 16 LED 500mA	28 Watts	6.00 Metres	Galvanised Steel	
Y	20	STREET LIGHTING	FOREST WAY	HUMBERSTON	532068.66	405957.65	2018	08/06/2018	69886	Urbis	Axia 16 LED 500mA	28 Watts	6.00 Metres	Galvanised Steel	
Y	21	STREET LIGHTING	FOREST WAY	HUMBERSTON	532105.91	405968.35	2018	08/06/2018	69887	Urbis	Axia 16 LED 500mA	28 Watts	6.00 Metres	Galvanised Steel	
Y	22	STREET LIGHTING	FOREST WAY	HUMBERSTON			2018	08/06/2018	69888	Urbis	Axia 16 LED 500mA	28 Watts	6.00 Metres	Galvanised Steel	
Y	23	STREET LIGHTING	FOREST WAY	HUMBERSTON			2018	08/06/2018	69889	Urbis	Axia 16 LED 500mA	28 Watts	6.00 Metres	Galvanised Steel	
Y	24	STREET LIGHTING	FOREST WAY	HUMBERSTON			2018	08/06/2018	69890	Urbis	Axia 16 LED 500mA	28 Watts	6.00 Metres	Galvanised Steel	
Y	1	STREET LIGHTING	HAILE ROAD	HUMBERSTON	531336.75	406203.24	2003		50017	1 Urbis LED	Axia 16 LED 500mA	28 Watts	6.00 Metres	Stainless Steel	
Y	2	STREET LIGHTING	HAILE ROAD	HUMBERSTON	531333.21	406167.68	1965		50018	1 Urbis LED	Axia 16 LED 500mA	28 Watts	5.00 Metres	Galvanised Steel	
Y	3	STREET LIGHTING	HAILE ROAD	HUMBERSTON	531348.39	406137.3	1965		50019	1 Urbis LED	Axia 16 LED 500mA	28 Watts	5.00 Metres	Galvanised Steel	
Y	4	STREET LIGHTING	HAILE ROAD	HUMBERSTON	531348.72	406100.9	1965		50020	1 Urbis LED	Axia 16 LED 500mA	28 Watts	5.00 Metres	Galvanised Steel	
Y	5	STREET LIGHTING	HAILE ROAD	HUMBERSTON	531362.65	406061.85	1965		50021	1 Urbis LED	Axia 16 LED 500mA	28 Watts	5.00 Metres	Galvanised Steel	
Y	1	STREET LIGHTING	HEWSON ROAD	HUMBERSTON	531550.83	405849.62	2010		50651	WRTL		29 Watts	6.00 Metres	Steel	
Y	2	STREET LIGHTING	HEWSON ROAD	HUMBERSTON	531531.63	405876.89	2010		50652	Urbis	Axia 16 LED 350mA	19 Watts	6.00 Metres	Steel	
Y	3	STREET LIGHTING	HEWSON ROAD	HUMBERSTON	531540.21	405914.09	2010		50653	Urbis	Axia 16 LED 350mA	19 Watts	6.00 Metres	Steel	
Y	4	STREET LIGHTING	HEWSON ROAD	HUMBERSTON	531577.92	405922.89	2010		50654	Urbis	Axia 16 LED 500mA	28 Watts	6.00 Metres	Steel	
Y	5	STREET LIGHTING	HEWSON ROAD	HUMBERSTON	531615.78	405940.54	2010		50655	WRTL		29 Watts	6.00 Metres	Steel	
Y	6	STREET LIGHTING	HEWSON ROAD	HUMBERSTON	531651.07	405939.26	2010		50656	WRTL		29 Watts	6.00 Metres	Steel	
Y	1	STREET LIGHTING	IONA DRIVE	HUMBERSTON	531731.52	405882.13	1992		51355	Urbis	Axia 16 LED 350mA	19 Watts	5.00 Metres	Galvanised Steel	
Y	2	STREET LIGHTING	IONA DRIVE	HUMBERSTON	531752.78	405877.64	1992		51356	Urbis	Axia 16 LED 350mA	19 Watts	5.00 Metres	Galvanised Steel	
Y	3	STREET LIGHTING	IONA DRIVE	HUMBERSTON	531776.91	405895.3	1992		51357	Urbis	Axia 16 LED 350mA	19 Watts	5.00 Metres	Galvanised Steel	
Y	4	STREET LIGHTING	IONA DRIVE	HUMBERSTON	531808.93	405898.52	1992		51358	Urbis	Axia 16 LED 350mA	19 Watts	5.00 Metres	Galvanised Steel	
Y	5	STREET LIGHTING	IONA DRIVE	HUMBERSTON	531832.98	405896.06	1992		51359	Urbis	Axia 16 LED 350mA	19 Watts	5.00 Metres	Galvanised Steel	
Y	6	STREET LIGHTING	IONA DRIVE	HUMBERSTON	531845.26	405911.31	1992		51360	Urbis	Axia 16 LED 350mA	19 Watts	5.00 Metres	Galvanised Steel	
Y	1	STREET LIGHTING	MIDFIELD ROAD	HUMBERSTON	531022.19	405551.81	2014		53595	1 Urbis LED	Axia 16 LED 500mA	28 Watts	6.00 Metres	Galvanised Steel	
Y	2	STREET LIGHTING	MIDFIELD ROAD	HUMBERSTON	531055.23	405550.86	2014		53596	1 Urbis LED	Axia 16 LED 500mA	28 Watts	6.00 Metres	Galvanised Steel	
Y	3	STREET LIGHTING	MIDFIELD ROAD	HUMBERSTON	531107	405575.47	2014		53597	1 Urbis LED	Axia 16 LED 500mA	28 Watts	6.00 Metres	Galvanised Steel	
Y	4	STREET LIGHTING	MIDFIELD ROAD	HUMBERSTON	531160.92	405580.21	2014		53598	1 Urbis LED	Axia 16 LED 500mA	28 Watts	6.00 Metres	Galvanised Steel	
Y	5	STREET LIGHTING	MIDFIELD ROAD	HUMBERSTON	531184.21	405597.62	1998		53599	1 Urbis LED	Axia 16 LED 500mA	28 Watts	6.00 Metres	Galvanised Steel	
Y	6	STREET LIGHTING	MIDFIELD ROAD	HUMBERSTON	531211.68	405604.96	2014		53600	1 Urbis LED	Axia 16 LED 500mA	28 Watts	6.00 Metres	Galvanised Steel	
Y	7	STREET LIGHTING	MIDFIELD ROAD	HUMBERSTON	531260.66	405615.65	2014		53601	1 Urbis LED	Axia 16 LED 500mA	28 Watts	6.00 Metres	Galvanised Steel	
Y	8	STREET LIGHTING	MIDFIELD ROAD	HUMBERSTON	531292.28	405617.69	2001		53602	1 Urbis LED	Axia 16 LED 500mA	28 Watts	6.00 Metres	Galvanised Steel	
Y	9	STREET LIGHTING	MIDFIELD ROAD	HUMBERSTON	531334.71	405622.37	2002		53603	1 Urbis LED	Axia 16 LED 500mA	28 Watts	6.00 Metres	Galvanised Steel	
Y	10	STREET LIGHTING	MIDFIELD ROAD	HUMBERSTON	531365.32	405644.76	2002		53604	1 Urbis LED	Axia 16 LED 500mA	28 Watts	6.00 Metres	Galvanised Steel	
Y	11	STREET LIGHTING	MIDFIELD ROAD	HUMBERSTON	531399.57	405641.82	2002		53605	1 Urbis LED	Axia 16 LED 500mA	28 Watts	6.00 Metres	Galvanised Steel	
Y	12	STREET LIGHTING	MIDFIELD ROAD	HUMBERSTON	531440.29	405663.89	2002		53606	1 Urbis LED	Axia 16 LED 500mA	28 Watts	6.00 Metres	Galvanised Steel	
Y	13	STREET LIGHTING	MIDFIELD ROAD	HUMBERSTON	531488.61	405671.84	2002		53607	1 Urbis LED	Axia 16 LED 500mA	28 Watts	6.00 Metres	Galvanised Steel	
Y	1	STREET LIGHTING	NEWLANDS PARK	HUMBERSTON	531867.15	406256.31	1987		54125	Urbis	Axia 16 LED 350mA	19 Watts	5.00 Metres	Galvanised Steel	
Y	2	STREET LIGHTING	NEWLANDS PARK	HUMBERSTON	531861.33	406223.59	1987		54126	Urbis	Axia 16 LED 350mA	19 Watts	5.00 Metres	Galvanised Steel	
Y	3	STREET LIGHTING	NEWLANDS PARK	HUMBERSTON	531860.57	406201.63	1987		54127	Urbis	Axia 16 LED 350mA	19 Watts	5.00 Metres	Galvanised Steel	
Y	4	STREET LIGHTING	NEWLANDS PARK	HUMBERSTON	531847.41	406170.49	1987		54128	Urbis	Axia 16 LED 350mA	19 Watts	5.00 Metres	Galvanised Steel	
Y	5	STREET LIGHTING	NEWLANDS PARK	HUMBERSTON	531857.41	406141.44	1994		54129	Urbis	Axia 16 LED 350mA	19 Watts	5.00 Metres	Galvanised Steel	

Y	6	STREET LIGHTING	NEWLANDS PARK	HUMBERSTON	531850.44	406117.96	1994		54130	Urbis	Axia 16 LED 350mA	19 Watts	5.00 Metres	Galvanised Steel	
Y	7	STREET LIGHTING	NEWLANDS PARK	HUMBERSTON	531833.99	406103.84	1994		54131	Urbis	Axia 16 LED 350mA	19 Watts	5.00 Metres	Galvanised Steel	
Y	8	STREET LIGHTING	NEWLANDS PARK	HUMBERSTON	531813.1	406111.63	1994		54132	Urbis	Axia 16 LED 350mA	19 Watts	5.00 Metres	Galvanised Steel	
Y	1	STREET LIGHTING	PARKER ROAD	HUMBERSTON	531294.01	405848.29	2010		54719	WRTL		29 Watts	6.00 Metres	Steel	
Y	2	STREET LIGHTING	PARKER ROAD	HUMBERSTON	531298.7	405881.51	2010		54720	WRTL		29 Watts	6.00 Metres	Steel	
Y	3	STREET LIGHTING	PARKER ROAD	HUMBERSTON	531323.49	405905.09	2010		54721	Urbis	Axia 16 LED 500mA	28 Watts	6.00 Metres	Steel	
Y	4	STREET LIGHTING	PARKER ROAD	HUMBERSTON	531354.62	405911.93	2010		54722	Urbis	Axia 16 LED 500mA	28 Watts	6.00 Metres	Steel	
Y	5	STREET LIGHTING	PARKER ROAD	HUMBERSTON	531394.62	405927.6	2010		54723	WRTL		29 Watts	6.00 Metres	Steel	
Y	6	STREET LIGHTING	PARKER ROAD	HUMBERSTON	531434.09	405921.94	2010		54724	WRTL		29 Watts	6.00 Metres	Steel	
Y	1	STREET LIGHTING	RICHARDSON CLOSE	HUMBERSTON	531266.12	405406.78	2014	29/08/2014	56093	1 Urbis LED	Axia 16 LED 500mA	28 Watts	6.00 Metres	Galvanised Steel	
Y	2	STREET LIGHTING	RICHARDSON CLOSE	HUMBERSTON	531293.58	405378.55	2014	29/08/2014	56094	1 Urbis LED	Axia 16 LED 500mA	28 Watts	6.00 Metres	Galvanised Steel	
Y	1	STREET LIGHTING	ROWAN DRIVE	HUMBERSTON	531165.32	405810.19	2021	12/02/2021	68274	Urbis	Axia 24 LED 500mA	28 Watts	6.00 Metres	Galvanised Steel	
Y	1	STREET LIGHTING	SHERATON DRIVE	HUMBERSTON	531128.22	405735.19	2014		57133	1 Urbis LED	Axia 16 LED 500mA	28 Watts	6.00 Metres	Galvanised Steel	
Y	2	STREET LIGHTING	SHERATON DRIVE	HUMBERSTON	531110.24	405768.1	2014		57134	1 Urbis LED	Axia 16 LED 500mA	28 Watts	6.00 Metres	Galvanised Steel	
Y	3	STREET LIGHTING	SHERATON DRIVE	HUMBERSTON	531110.88	405794.43	2014		57135	1 Urbis LED	Axia 16 LED 500mA	28 Watts	6.00 Metres	Galvanised Steel	
Y	4	STREET LIGHTING	SHERATON DRIVE	HUMBERSTON	531097.08	405825.38	2014		57136	1 Urbis LED	Axia 16 LED 500mA	28 Watts	6.00 Metres	Galvanised Steel	
Y	5	STREET LIGHTING	SHERATON DRIVE	HUMBERSTON	531090.25	405856.01	2014		57137	1 Urbis LED	Axia 16 LED 500mA	28 Watts	6.00 Metres	Galvanised Steel	
Y	6	STREET LIGHTING	SHERATON DRIVE	HUMBERSTON	531083.41	405890.12	1983		57138	1 Urbis LED	Axia 16 LED 500mA	28 Watts	5.00 Metres	Galvanised Steel	
Y	7	STREET LIGHTING	SHERATON DRIVE	HUMBERSTON	531053.54	405890.05	2014		57139	1 Urbis LED	Axia 16 LED 500mA	28 Watts	6.00 Metres	Galvanised Steel	
Y	8	STREET LIGHTING	SHERATON DRIVE	HUMBERSTON	531030.76	405877.71	2014		57140	1 Urbis LED	Axia 16 LED 500mA	28 Watts	6.00 Metres	Galvanised Steel	
Y	9	STREET LIGHTING	SHERATON DRIVE	HUMBERSTON	531030	405846.77	2014		57141	1 Urbis LED	Axia 16 LED 500mA	28 Watts	6.00 Metres	Galvanised Steel	
Y	1	STREET LIGHTING	SINDERSON ROAD	HUMBERSTON	531354.27	405786.26	1998		57235	1 Urbis LED	Axia 16 LED 500mA	28 Watts	6.00 Metres	Galvanised Steel	
Y	2	STREET LIGHTING	SINDERSON ROAD	HUMBERSTON	531388.82	405782.53	1998		57236	1 Urbis LED	Axia 16 LED 500mA	28 Watts	6.00 Metres	Galvanised Steel	
Y	3	STREET LIGHTING	SINDERSON ROAD	HUMBERSTON	531414.52	405802.47	1998		57237	1 Urbis LED	Axia 16 LED 500mA	28 Watts	6.00 Metres	Galvanised Steel	
Y	4	STREET LIGHTING	SINDERSON ROAD	HUMBERSTON	531438.74	405811.05	1998		57238	1 Urbis LED	Axia 16 LED 500mA	28 Watts	6.00 Metres	Galvanised Steel	
Y	5	STREET LIGHTING	SINDERSON ROAD	HUMBERSTON	531490.64	405815.1	1998		57239	1 Urbis LED	Axia 16 LED 500mA	28 Watts	6.00 Metres	Galvanised Steel	
Y	6	STREET LIGHTING	SINDERSON ROAD	HUMBERSTON	531513.98	405830.93	1998		57240	1 Urbis LED	Axia 16 LED 500mA	28 Watts	6.00 Metres	Galvanised Steel	
Y	7	STREET LIGHTING	SINDERSON ROAD	HUMBERSTON	531553.47	405831.24	1998		57241	1 Urbis LED	Axia 16 LED 500mA	28 Watts	6.00 Metres	Galvanised Steel	
Y	8	STREET LIGHTING	SINDERSON ROAD	HUMBERSTON	531576.25	405850.93	1998		57242	1 Urbis LED	Axia 16 LED 500mA	28 Watts	6.00 Metres	Galvanised Steel	
Y	9	STREET LIGHTING	SINDERSON ROAD	HUMBERSTON	531612.96	405853.08	2007		57243	1 Urbis LED	Axia 16 LED 500mA	28 Watts	6.00 Metres	Stainless Steel	
Y	10	STREET LIGHTING	SINDERSON ROAD	HUMBERSTON	531646.12	405868.46	1998		57244	1 Urbis LED	Axia 16 LED 500mA	28 Watts	6.00 Metres	Galvanised Steel	
Y	11	STREET LIGHTING	SINDERSON ROAD	HUMBERSTON	531666.25	405893.33	1998		57245	1 Urbis LED	Axia 16 LED 500mA	28 Watts	6.00 Metres	Galvanised Steel	
Y	12	STREET LIGHTING	SINDERSON ROAD	HUMBERSTON	531672.83	405924.59	1998		57246	1 Urbis LED	Axia 16 LED 500mA	28 Watts	6.00 Metres	Galvanised Steel	
Y	13	STREET LIGHTING	SINDERSON ROAD	HUMBERSTON	531668.53	405951.49	1998		57247	1 Urbis LED	Axia 16 LED 500mA	28 Watts	6.00 Metres	Galvanised Steel	
Y	14	STREET LIGHTING	SINDERSON ROAD	HUMBERSTON	531657.77	405983.51	1998		57248	1 Urbis LED	Axia 16 LED 500mA	28 Watts	6.00 Metres	Galvanised Steel	
Y	15	STREET LIGHTING	SINDERSON ROAD	HUMBERSTON	531628.77	405998.32	1998		57249	1 Urbis LED	Axia 16 LED 500mA	28 Watts	6.00 Metres	Galvanised Steel	
Y	16	STREET LIGHTING	SINDERSON ROAD	HUMBERSTON	531621.81	406030.91	1998		57250	1 Urbis LED	Axia 16 LED 500mA	28 Watts	6.00 Metres	Galvanised Steel	
Y	1	STREET LIGHTING	SOUTH VIEW	HUMBERSTON	531010.47	406091.75	2014		57394	1 Urbis LED	Axia 16 LED 500mA	28 Watts	6.00 Metres	Galvanised Steel	
Y	2	STREET LIGHTING	SOUTH VIEW	HUMBERSTON	531014.15	406052.64	2014		57395	1 Urbis LED	Axia 16 LED 500mA	28 Watts	6.00 Metres	Galvanised Steel	
Y	3	STREET LIGHTING	SOUTH VIEW	HUMBERSTON	531047.94	406058.02	2014		57396	1 Urbis LED	Axia 16 LED 500mA	28 Watts	6.00 Metres	Galvanised Steel	
Y	4	STREET LIGHTING	SOUTH VIEW	HUMBERSTON	531084.14	406064.8	2014		57397	1 Urbis LED	Axia 16 LED 500mA	28 Watts	6.00 Metres	Galvanised Steel	
Y	1	STREET LIGHTING	SWALES ROAD	HUMBERSTON	531224.58	405827.79	2005		58672	1 Urbis LED	Axia 16 LED 500mA	28 Watts	6.00 Metres	Stainless Steel	
Y	2	STREET LIGHTING	SWALES ROAD	HUMBERSTON	531253.2	405834.33	2001		58673	1 Urbis LED	Axia 16 LED 500mA	28 Watts	6.00 Metres	Galvanised Steel	
Y	3	STREET LIGHTING	SWALES ROAD	HUMBERSTON	531286.69	405827.52	2001		58674	1 Urbis LED	Axia 16 LED 500mA	28 Watts	6.00 Metres	Galvanised Steel	
Y	4	STREET LIGHTING	SWALES ROAD	HUMBERSTON	531321.81	405834.71	2001		58675	1 Urbis LED	Axia 16 LED 500mA	28 Watts	6.00 Metres	Galvanised Steel	
Y	5	STREET LIGHTING	SWALES ROAD	HUMBERSTON	531332.25	405797.22	2001		58676	1 Urbis LED	Axia 16 LED 500mA	28 Watts	6.00 Metres	Galvanised Steel	
Y	6	STREET LIGHTING	SWALES ROAD	HUMBERSTON	531348.06	405758.71	2001		58677	1 Urbis LED	Axia 16 LED 500mA	28 Watts	6.00 Metres	Galvanised Steel	
Y	7	STREET LIGHTING	SWALES ROAD	HUMBERSTON	531351.55	405731.08	2002		58678	1 Urbis LED	Axia 16 LED 500mA	28 Watts	6.00 Metres	Galvanised Steel	
Y	8	STREET LIGHTING	SWALES ROAD	HUMBERSTON	531366.05	405695.13	2002		58679	1 Urbis LED	Axia 16 LED 500mA	28 Watts	6.00 Metres	Galvanised Steel	
Y	9	STREET LIGHTING	SWALES ROAD	HUMBERSTON	531341.25	405690.86	2002		58680	1 Urbis LED	Axia 16 LED 500mA	28 Watts	6.00 Metres	Galvanised Steel	
Y	10	STREET LIGHTING	SWALES ROAD	HUMBERSTON	531314.99	405701.96	2002		58681	1 Urbis LED	Axia 16 LED 500mA	28 Watts	6.00 Metres	Galvanised Steel	
Y	11	STREET LIGHTING	SWALES ROAD	HUMBERSTON	531282.88	405687.46	2002		58682	1 Urbis LED	Axia 16 LED 500mA	28 Watts	6.00 Metres	Galvanised Steel	
Y	12	STREET LIGHTING	SWALES ROAD	HUMBERSTON	531281.71	405713.32	2002		58683	1 Urbis LED	Axia 16 LED 500mA	28 Watts	6.00 Metres	Galvanised Steel	
Y	1	STREET LIGHTING	VISCOUNT WAY	HUMBERSTON	531721.34	405949.1	1991		59644	Urbis	Axia 16 LED 350mA	19 Watts	5.00 Metres	Galvanised Steel	
Y	2	STREET LIGHTING	VISCOUNT WAY	HUMBERSTON	531745.64	405945.04	1991		59645	Urbis	Axia 16 LED 350mA	19 Watts	5.00 Metres	Galvanised Steel	
Y	3	STREET LIGHTING	VISCOUNT WAY	HUMBERSTON	531769.18	405960.17	1991		59646	Urbis	Axia 16 LED 350mA	19 Watts	5.00 Metres	Galvanised Steel	
Y	4	STREET LIGHTING	VISCOUNT WAY	HUMBERSTON	531798.8	405952.89	1991		59647	Urbis	Axia 16 LED 350mA	19 Watts	5.00 Metres	Galvanised Steel	
Y	5	STREET LIGHTING	VISCOUNT WAY	HUMBERSTON	531823.23	405967.89	1991		59648	Urbis	Axia 16 LED 350mA	19 Watts	5.00 Metres	Galvanised Steel	
Y	6	STREET LIGHTING	VISCOUNT WAY	HUMBERSTON	531826.4	405986.69	1991		59649	Urbis	Axia 16 LED 350mA	19 Watts	5.00 Metres	Galvanised Steel	
Y	1	STREET LIGHTING	CHAPMAN CRESCENT	HUMBERSTON	531576.96	405943.37	2010		45613	WRTL		29 Watts	6.00 Metres	Steel	
Y	2	STREET LIGHTING	CHAPMAN CRESCENT	HUMBERSTON	531562.74	405977.85	2010		45614	WRTL		29 Watts	6.00 Metres	Steel	
Y	3	STREET LIGHTING	CHAPMAN CRESCENT	HUMBERSTON	531531.97	405992.05	2010		45615	WRTL		29 Watts	6.00 Metres	Steel	
Y	4	STREET LIGHTING	CHAPMAN CRESCENT	HUMBERSTON	531503.03	405989.03	2010		45616	Urbis	Axia 16 LED 350mA	19 Watts	6.00 Metres	Steel	
Y	5	STREET LIGHTING	CHAPMAN CRESCENT	HUMBERSTON	531477.46	405974.24	2010		45617	WRTL		29 Watts	6.00 Metres	Steel	
Y	6	STREET LIGHTING	CHAPMAN CRESCENT	HUMBERSTON	531453.54	405980.27	2010		45618	WRTL		29 Watts	6.00 Metres	Steel	
Y	1	STREET LIGHTING	CLEE NESS DRIVE	HUMBERSTON	531389.86	406108.05	2014	29/07/2014	46176	1 Urbis LED	Axia 16 LED 500mA	28 Watts	6.00 Metres	Galvanised Steel	
Y	2	STREET LIGHTING	CLEE NESS DRIVE	HUMBERSTON	531429.91	406134.45	2014	29/07/2014	46177	1 Urbis LED	Axia 16 LED 500mA	28 Watts	6.00 Metres	Galvanised Steel	
Y	1	STREET LIGHTING	COULAM PLACE	HUMBERSTON	531392.8	405907.6	2003		46808	1 Urbis LED	Axia 16 LED 500mA	28 Watts	5.00 Metres	Stainless Steel	
Y	2	STREET LIGHTING	COULAM PLACE	HUMBERSTON	531397.17	405878.04	2002		46809	1 Urbis LED	Axia 16 LED 500mA	28 Watts	5.00 Metres	Stainless Steel	
Y	3	STREET LIGHTING	COULAM PLACE	HUMBERSTON	531408.6	405851.8	2002		46810	1 Urbis LED	Axia 16 LED 500mA	28 Watts	5.00 Metres	Stainless Steel	
Y	4	STREET LIGHTING	COULAM PLACE	HUMBERSTON	531382.78	405848.13	2002		46811	1 Urbis LED	Axia 16 LED 500mA	28 Watts	5.00 Metres	Stainless Steel	
Y	1	STREET LIGHTING	EASTFIELD	HUMBERSTON	531176.32	405668.04	2014		47753	1 Urbis LED	Axia 16 LED 500mA	28 Watts	6.00 Metres	Galvanised Steel	
Y	2	STREET LIGHTING	EASTFIELD	HUMBERSTON	531219.73	405676.84	2014		47754	1 Urbis LED	Axia 16 LED 500mA	28 Watts	6.00 Metres	Galvanised Steel	
Y	3	STREET LIGHTING	EASTFIELD	HUMBERSTON	531199.99	405729.18	2014		47755	1 Urbis LED	Axia 16 LED 500mA	28 Watts	6.00 Metres	Galvanised Steel	
Y	1	STREET LIGHTING	HURSTLEA DRIVE	HUMBERSTON	531642.32	406162.2	2014		51240	1 Urbis LED	Teceo 16 LED 500mA	28 Watts	6.00 Metres	Galvanised Steel	
Y	2	STREET LIGHTING	HURSTLEA DRIVE	HUMBERSTON	531609.91	406162.77	2014		51241	1 Urbis LED	Teceo 16 LED 500mA	28 Watts	6.00 Metres	Galvanised Steel	
Y	3	STREET LIGHTING	HURSTLEA DRIVE	HUMBERSTON	531576.62	406145.24	2014		51242	1 Urbis LED	Teceo 16 LED 500mA	28 Watts	6.00 Metres	Galvanised Steel	
Y	4	STREET LIGHTING	HURSTLEA DRIVE	HUMBERSTON	531543.71	406150.37	2014		51243	1 Urbis LED	Teceo 16 LED 500mA	28 Watts	6.00 Metres	Galvanised Steel	
Y	5	STREET LIGHTING	HURSTLEA DRIVE	HUMBERSTON	531501.18	406142.2	2014		51244	1 Urbis LED	Teceo 16 LED 500mA	28 Watts	6.00 Metres	Galvanised Steel	
Y	1	STREET LIGHTING	LIDGARD ROAD	HUMBERSTON	531238.25	406040.16	2000		52513	1 Urbis LED	Axia 16 LED 500mA	28 Watts	6.00 Metres	Galvanised Steel	
Y	2	STREET LIGHTING	LIDGARD ROAD	HUMBERSTON	531268.27	406032.63	2008		52514	1 Urbis LED	Axia 16 LED 500mA	28 Watts	6.00 Metres	Galvanised Steel	
Y	3	STREET LIGHTING	LIDGARD ROAD	HUMBERSTON	531300.15	406044.75	2000		52515	1 Urbis LED	Axia 16 LED 500mA	28 Watts	6.00 Metres	Galvanised Steel	
Y	4	STREET LIGHTING	LIDGARD ROAD	HUMBERSTON	531329.9	406033.55	2000		52516	1 Urbis LED	Axia 16 LED 500mA	28 Watts	6.00 Metres	Galvanised Steel	
Y	5	STREET LIGHTING	LIDGARD ROAD	HUMBERSTON	531364.45	406033.99	2000		52517	1 Urbis LED	Axia 16 LED 500mA	28 Watts	6.00 Metres	Galvanised Steel	
Y	6	STREET LIGHTING	LIDGARD ROAD	HUMBERSTON	531390.02	406048.86	2000		52518	1 Urbis LED	Axia 16 LED 500mA	28 Watts	6.00 Metres	Galvanised Steel	
Y	7	STREET LIGHTING	LIDGARD ROAD	HUMBERSTON	531419.07	406054.05	2000		52519	1 Urbis LED	Axia 16 LED 500mA	28 Watts	6.00 Metres	Galvanised Steel	
Y	8	STREET LIGHTING	LIDGARD ROAD	HUMBERSTON	531448.56	406059.05	2000		52520	1 Urbis LED	Axia 16 LED 500mA	28 Watts	6.00 Metres	Galvanised Steel	
Y	9	STREET LIGHTING	LIDGARD ROAD	HUMBERSTON	531474.13	406052.47	2000		52521	1 Urbis LED	Axia 16 LED 500mA	28 Watts	6.00 Metres	Galvanised Steel	
Y	10	STREET LIGHTING	LIDGARD ROAD	HUMBERSTON	531501.67	406064.3	2000		52522	1 Urbis LED	Axia 16 LED 500mA	28 Watts	6.00 Metres	Galvanised Steel	
Y	11	STREET LIGHTING	LIDGARD ROAD	HUMBERSTON	531539.77	406048.04	2000		52523	1 Urbis LED	Axia 16 LED 500mA	28 Watts	6.00 Metres	Galvanised Steel	
Y	12	STREET LIGHTING	LIDGARD ROAD	HUMBERSTON	531572.68	406057.09	2000		52524	1 Urbis LED	Axia 16 LED 500mA	28 Watts	6.00 Metres	Galvanised Steel	
Y	13	STREET LIGHTING	LIDGARD ROAD	HUMBERSTON	531603.56	406040.95	2000		52525	1 Urbis LED	Axia 16 LED 500mA	28 Watts	6.00 Metres	Galvanised Steel	
Y	14	STREET LIGHTING	LIDGARD ROAD	HUMBERSTON	531628.51	406043	2000		52526	1 Urbis LED	Axia 16 LED 500mA	28 Watts	6.00 Metres	Galvanised Steel	
Y	15	STREET LIGHTING	LIDGARD ROAD	HUMBERSTON	531656.74	406058.51	2000		52527	1 Urbis LED	Axia 16 LED 500mA	28 Watts	6.00 Metres	Galvanised Steel	
Y	1	STREET LIGHTING	MIDFIELD PLACE	HUMBERSTON	531116.49	405555.02	2002		53588	Urbis	Axia 16 LED 350mA	19 Watts	5.00 Metres	Galvanised Steel	
Y	2	STREET LIGHTING	MIDFIELD PLACE	HUMBERSTON	531117.25	405523.06	2002		53589	Urbis	Axia 16 LED 350mA	19 Watts	5.00 Metres	Galvanised Steel	
Y	3	STREET LIGHTING	MIDFIELD PLACE	HUMBERSTON	531127.89	405507.56	2002		53590	Urbis	Axia 16 LED 350mA	19 Watts	5.00 Metres	Galvanised Steel	
Y	4	STREET LIGHTING	MIDFIELD PLACE	HUMBERSTON	531161.94	405513.32	2002		53591	Urbis	Axia 16 LED 350mA	19 Watts	5.00 Metres	Galvanised Steel	
Y	5	STREET LIGHTING	MIDFIELD PLACE	HUMBERSTON	531194.72	405522.12	2002		53592	Urbis	Axia 16 LED 350mA	19 Watts	5.00 Metres	Galvanised Steel	
Y	6	STREET LIGHTING	MIDFIELD PLACE	HUMBERSTON	531225.99	405531.04	2002		53593	Urbis	Axia 16 LED 350mA	19 Watts	5.00 Metres	Galvanised Steel	
Y	7	STREET LIGHTING	MIDFIELD PLACE	HUMBERSTON	531245.86	405540.22	2002		53594	Urbis	Axia 16 LED 350mA	19 Watts	5.00 Metres	Galvanised Steel	
Y	1	STREET LIGHTING	THE CLOISTERS	HUMBERSTON	531112.81	405335.52	2017		58944	Urbis	Axia 16 LED 350mA	19 Watts	6.00 Metres	Galvanised Steel	
Y	2	STREET LIGHTING	THE CLOISTERS	HUMBERSTON	531123.46	405369.44	2014		58945	Urbis	Axia 16 LED 350mA	19 Watts	6.00 Metres	Galvanised Steel	
Y	3	STREET LIGHTING	THE CLOISTERS	HUMBERSTON	531107.31	405407.33	2022	10/05/2022	68901	Urbis	Axia 16 LED 350mA	19 Watts	6.00 Metres	Galvanised Steel	
Y	4	STREET LIGHTING	THE CLOISTERS	HUMBERSTON	531110.68	405430.7	2014		58947	Urbis	Axia 16 LED 350mA	19 Watts	6.00 Metres	Galvanised Steel	
Y	5	STREET LIGHTING	THE CLOISTERS	HUMBERSTON	531146.12	405445.07	2014		58948	Urbis	Axia 16 LED 350mA	19 Watts	6.00 Metres	Galvanised Steel	
Y	6	STREET LIGHTING	THE CLOISTERS	HUMBERSTON	531170.8	405465.51	2014		58949	Urbis	Axia 16 LED 350mA	19 Watts	6.00 Metres	Galvanised Steel	
Y	1	STREET LIGHTING	TOWNSEND CLOSE	HUMBERSTON	532039.28	406263.82	2014		59385	Urbis	Axia 16 LED 350mA	19 Watts	6.00 Metres	Galvanised Steel	
Y	2	STREET LIGHTING	TOWNSEND CLOSE	HUMBERSTON	532038.65	406228.16	2014		59386	Urbis	Axia 16 LED 350mA	19 Watts	6.00 Metres	Galvanised Steel	
Y	3	STREET LIGHTING	TOWNSEND CLOSE	HUMBERSTON	532046.37	406189.56	2014		59387	Urbis	Axia 16 LED 350mA	19 Watts	6.00 Metres	Galvanised Steel	

Y	1	STREET LIGHTING	WOODFIELD CLOSE	HUMBERSTON	531080.29	405582.06	2014	29/08/2014	61098	1 Urbis LED	Axia 16 LED 500mA	28 Watts	6.00 Metres	Galvanised Steel	
Y	2	STREET LIGHTING	WOODFIELD CLOSE	HUMBERSTON	531082.82	405618.26	2014	29/08/2014	61099	1 Urbis LED	Axia 16 LED 500mA	28 Watts	6.00 Metres	Galvanised Steel	
Y	3	STREET LIGHTING	WOODFIELD CLOSE	HUMBERSTON	531066.49	405645.54	2014	29/08/2014	61100	1 Urbis LED	Axia 16 LED 500mA	28 Watts	6.00 Metres	Galvanised Steel	
Y	4	STREET LIGHTING	WOODFIELD CLOSE	HUMBERSTON	531080.93	405684.4	2014	29/08/2014	61101	1 Urbis LED	Axia 16 LED 500mA	28 Watts	6.00 Metres	Galvanised Steel	
Y	1	STREET LIGHTING	ANTHONYS BANK ROAD	HUMBERSTON	532323.76	406298.09	1985		43252	1 Urbis LED	Teceo 24 LED 500mA	40 Watts	8.00 Metres	Galvanised Steel	
Y	2	STREET LIGHTING	ANTHONYS BANK ROAD	HUMBERSTON	532335.66	406281.51	1985		43253	1 Urbis LED	Teceo 24 LED 500mA	40 Watts	8.00 Metres	Galvanised Steel	
Y	3	STREET LIGHTING	ANTHONYS BANK ROAD	HUMBERSTON	532354.01	406258.41	1985		43254	1 Urbis LED	Teceo 24 LED 500mA	40 Watts	8.00 Metres	Galvanised Steel	
Y	4	STREET LIGHTING	ANTHONYS BANK ROAD	HUMBERSTON	532375.86	406236.44	1993		43255	1 Urbis LED	Teceo 24 LED 500mA	40 Watts	8.00 Metres	Galvanised Steel	
Y	5	STREET LIGHTING	ANTHONYS BANK ROAD	HUMBERSTON	532367.15	406219.68	1993		43256	1 Urbis LED	Teceo 24 LED 500mA	40 Watts	8.00 Metres	Galvanised Steel	
Y	6	STREET LIGHTING	ANTHONYS BANK ROAD	HUMBERSTON	532387.18	406221.93	1993		43257	1 Urbis LED	Teceo 24 LED 500mA	40 Watts	8.00 Metres	Galvanised Steel	
Y	1	STREET LIGHTING	ANDREW ROAD	HUMBERSTON	531683.72	405851.37	2014		62917	1 Urbis LED	Teceo 24 LED 500mA	40 Watts	6.00 Metres	Galvanised Steel	
Y	1	STREET LIGHTING	BARN OWL CLOSE	HUMBERSTON	531302.24	405642.72	2001		43699	Urbis	Axia 16 LED 350mA	19 Watts	6.00 Metres	Galvanised Steel	
Y	2	STREET LIGHTING	BARN OWL CLOSE	HUMBERSTON	531296.06	405671.24	2001		43700	Urbis	Axia 16 LED 350mA	19 Watts	6.00 Metres	Galvanised Steel	
Y	1	STREET LIGHTING	TAWNY OWL CLOSE	HUMBERSTON	531306.38	405586.24	2001		58763	1 Urbis LED	Axia 16 LED 500mA	28 Watts	6.00 Metres	Galvanised Steel	
Y	2	STREET LIGHTING	TAWNY OWL CLOSE	HUMBERSTON	531310.67	405556.51	2001		58764	1 Urbis LED	Axia 16 LED 500mA	28 Watts	6.00 Metres	Galvanised Steel	
Y	1	STREET LIGHTING	AMELIA COURT	HUMBERSTON	531478.3	405699.43	2003		43136	Urbis	Axia 16 LED 350mA	19 Watts	6.00 Metres	Galvanised Steel	
Y	2	STREET LIGHTING	AMELIA COURT	HUMBERSTON	531479.71	405731.41	2003		43137	Urbis	Axia 16 LED 350mA	19 Watts	6.00 Metres	Galvanised Steel	
Y	3	STREET LIGHTING	AMELIA COURT	HUMBERSTON	531453.32	405742.81	2003		43138	Urbis	Axia 16 LED 350mA	19 Watts	6.00 Metres	Galvanised Steel	
Y	4	STREET LIGHTING	AMELIA COURT	HUMBERSTON	531430.48	405733.4	2003		43139	Urbis	Axia 16 LED 350mA	19 Watts	6.00 Metres	Galvanised Steel	
Y	1	STREET LIGHTING	CHERRY CLOSE	HUMBERSTON	531465.71	405651.95	2003		45794	Urbis	Axia 16 LED 350mA	19 Watts	6.00 Metres	Galvanised Steel	
Y	2	STREET LIGHTING	CHERRY CLOSE	HUMBERSTON	531483.43	405609.38	2003		45795	Urbis	Axia 16 LED 350mA	19 Watts	6.00 Metres	Galvanised Steel	
Y	3	STREET LIGHTING	CHERRY CLOSE	HUMBERSTON	531508.08	405598.28	2003		45796	Urbis	Axia 16 LED 350mA	19 Watts	6.00 Metres	Galvanised Steel	
Y	4	STREET LIGHTING	CHERRY CLOSE	HUMBERSTON	531504.28	405572.91	2003		45797	Urbis	Axia 16 LED 350mA	19 Watts	6.00 Metres	Galvanised Steel	
Y	5	STREET LIGHTING	CHERRY CLOSE	HUMBERSTON	531499.17	405551.9	2003		45798	Urbis	Axia 16 LED 350mA	19 Watts	6.00 Metres	Galvanised Steel	
Y	6	STREET LIGHTING	CHERRY CLOSE	HUMBERSTON	531471.99	405542.84	2003		45799	Urbis	Axia 16 LED 350mA	19 Watts	6.00 Metres	Galvanised Steel	
Y	1	STREET LIGHTING	TUDOR CLOSE	HUMBERSTON	531233.37	405767.95	1993		59463	1 Urbis LED	Axia 16 LED 500mA	28 Watts	6.00 Metres	Galvanised Steel	
Y	2	STREET LIGHTING	TUDOR CLOSE	HUMBERSTON	531269.97	405767.77	1993		59464	1 Urbis LED	Axia 16 LED 500mA	28 Watts	6.00 Metres	Galvanised Steel	
Y	1	STREET LIGHTING	FOOTPATH MIDFIELD ROAD TO	HUMBERSTON	531333.86	405670.25	2002		48836	Urbis	Axia 16 LED 350mA	19 Watts	5.00 Metres	Galvanised Steel	
Y	2	STREET LIGHTING	FOOTPATH MIDFIELD ROAD TO	HUMBERSTON	531336.45	405649.07	2002		48837	Urbis	Axia 16 LED 350mA	19 Watts	5.00 Metres	Galvanised Steel	
Y	3	STREET LIGHTING	FOOTPATH MIDFIELD ROAD TO	HUMBERSTON	531342.16	405601.38	2002		48838	Urbis	Axia 16 LED 350mA	19 Watts	5.00 Metres	Galvanised Steel	
Y	4	STREET LIGHTING	FOOTPATH MIDFIELD ROAD TO	HUMBERSTON	531345.57	405578.51	2002		48839	Urbis	Axia 16 LED 350mA	19 Watts	5.00 Metres	Galvanised Steel	
Y	5	STREET LIGHTING	FOOTPATH MIDFIELD ROAD TO	HUMBERSTON	531348.98	405555.62	2002		48840	Urbis	Axia 16 LED 350mA	19 Watts	5.00 Metres	Galvanised Steel	
Y	6	STREET LIGHTING	FOOTPATH MIDFIELD ROAD TO	HUMBERSTON	531353.91	405533.59	2002		48841	Urbis	Axia 16 LED 350mA	19 Watts	5.00 Metres	Galvanised Steel	
Y	7	STREET LIGHTING	FOOTPATH MIDFIELD ROAD TO	HUMBERSTON	531356.94	405509.65	2002		48842	Urbis	Axia 16 LED 350mA	19 Watts	5.00 Metres	Galvanised Steel	
Y	8	STREET LIGHTING	FOOTPATH MIDFIELD ROAD TO	HUMBERSTON	531361.37	405485.9	2002		48843	Urbis	Axia 16 LED 350mA	19 Watts	5.00 Metres	Galvanised Steel	
Y	1	STREET LIGHTING	ALDRICH ROAD	CLEETHORPES	530935.43	407769.88	1993		42959	1 Urbis LED	Axia 16 LED 500mA	28 Watts	6.00 Metres	Galvanised Steel	
Y	2	STREET LIGHTING	ALDRICH ROAD	CLEETHORPES	530909.1	407759.63	1993		42960	1 Urbis LED	Axia 16 LED 500mA	28 Watts	6.00 Metres	Galvanised Steel	
Y	3	STREET LIGHTING	ALDRICH ROAD	CLEETHORPES	530898.09	407734.63	1993		42961	1 Urbis LED	Axia 16 LED 500mA	28 Watts	6.00 Metres	Galvanised Steel	
Y	4	STREET LIGHTING	ALDRICH ROAD	CLEETHORPES	530871.38	407723.55	1993		42962	1 Urbis LED	Axia 16 LED 500mA	28 Watts	6.00 Metres	Galvanised Steel	
Y	5	STREET LIGHTING	ALDRICH ROAD	CLEETHORPES	530859.99	407698.3	1993		42963	1 Urbis LED	Axia 16 LED 500mA	28 Watts	6.00 Metres	Galvanised Steel	
Y	6	STREET LIGHTING	ALDRICH ROAD	CLEETHORPES	530832.14	407686.46	1993		42964	1 Urbis LED	Axia 16 LED 500mA	28 Watts	6.00 Metres	Galvanised Steel	
Y	7	STREET LIGHTING	ALDRICH ROAD	CLEETHORPES	530810.88	407666.4	1993		42965	1 Urbis LED	Axia 16 LED 500mA	28 Watts	6.00 Metres	Galvanised Steel	
Y	8	STREET LIGHTING	ALDRICH ROAD	CLEETHORPES	530792.53	407648.49	1993		42966	1 Urbis LED	Axia 16 LED 500mA	28 Watts	6.00 Metres	Galvanised Steel	
Y	9	STREET LIGHTING	ALDRICH ROAD	CLEETHORPES	530780.63	407622.84	1993		42967	1 Urbis LED	Axia 16 LED 500mA	28 Watts	6.00 Metres	Galvanised Steel	
Y	10	STREET LIGHTING	ALDRICH ROAD	CLEETHORPES	530753.92	407611.41	1993		42968	1 Urbis LED	Axia 16 LED 500mA	28 Watts	6.00 Metres	Galvanised Steel	
Y	11	STREET LIGHTING	ALDRICH ROAD	CLEETHORPES	530739.75	407584.88	1993		42969	1 Urbis LED	Axia 16 LED 500mA	28 Watts	6.00 Metres	Galvanised Steel	
Y	12	STREET LIGHTING	ALDRICH ROAD	CLEETHORPES	530711.39	407580.89	1993		42970	1 Urbis LED	Axia 16 LED 500mA	28 Watts	6.00 Metres	Galvanised Steel	
Y	13	STREET LIGHTING	ALDRICH ROAD	CLEETHORPES	530683.93	407573.36	1993		42971	1 Urbis LED	Axia 16 LED 500mA	28 Watts	6.00 Metres	Galvanised Steel	
Y	14	STREET LIGHTING	ALDRICH ROAD	CLEETHORPES	530658.36	407561.65	1993		42972	1 Urbis LED	Axia 16 LED 500mA	28 Watts	6.00 Metres	Galvanised Steel	
Y	15	STREET LIGHTING	ALDRICH ROAD	CLEETHORPES	530626.21	407574.37	1993		42973	1 Urbis LED	Axia 16 LED 500mA	28 Watts	6.00 Metres	Galvanised Steel	
Y	16	STREET LIGHTING	ALDRICH ROAD	CLEETHORPES	530595.45	407572.67	1993		42974	1 Urbis LED	Axia 16 LED 500mA	28 Watts	6.00 Metres	Galvanised Steel	
Y	17	STREET LIGHTING	ALDRICH ROAD	CLEETHORPES	530571.9	407555.14	2012	27/03/2012	42975	1 Urbis LED	Teceo 32 LED 500mA	28 Watts	6.00 Metres	Galvanised Steel	
Y	1	STREET LIGHTING	BASSETT ROAD	CLEETHORPES	531032.24	407775	2006		43793	1 Urbis LED	Axia 16 LED 500mA	28 Watts	6.00 Metres	Stainless Steel	
Y	2	STREET LIGHTING	BASSETT ROAD	CLEETHORPES	531049.55	407744.46	2006		43794	1 Urbis LED	Axia 16 LED 500mA	28 Watts	6.00 Metres	Stainless Steel	
Y	3	STREET LIGHTING	BASSETT ROAD	CLEETHORPES	531068.7	407710.74	1997		43795	1 Urbis LED	Axia 16 LED 500mA	28 Watts	6.00 Metres	Galvanised Steel	
Y	4	STREET LIGHTING	BASSETT ROAD	CLEETHORPES	531094.18	407683.53	2006		43796	1 Urbis LED	Axia 16 LED 500mA	28 Watts	6.00 Metres	Stainless Steel	
Y	5	STREET LIGHTING	BASSETT ROAD	CLEETHORPES	531101.99	407651.57	2006		43797	1 Urbis LED	Axia 16 LED 500mA	28 Watts	6.00 Metres	Stainless Steel	
Y	1	STREET LIGHTING	BRADFORD AVENUE	CLEETHORPES	531257.41	408147.01	2020	23/10/2020	68327	Urbis	Axia 16 LED 500mA	28 Watts	5.00 Metres	Cast Iron	
Y	2	STREET LIGHTING	BRADFORD AVENUE	CLEETHORPES	531218.43	408135.31	2019	18/10/2019	67765	Urbis	Axia 16 LED 500mA	28 Watts	5.00 Metres	Cast Iron	
Y	3	STREET LIGHTING	BRADFORD AVENUE	CLEETHORPES	531188.13	408122.02	2019	18/10/2019	67766	Urbis	Axia 16 LED 500mA	28 Watts	5.00 Metres	Cast Iron	
Y	4	STREET LIGHTING	BRADFORD AVENUE	CLEETHORPES	531152.34	408097.21	2019	18/10/2019	67767	Urbis	Axia 16 LED 500mA	28 Watts	5.00 Metres	Cast Iron	
Y	5	STREET LIGHTING	BRADFORD AVENUE	CLEETHORPES	531113.01	408088.71	2019	18/10/2019	67768	Urbis	Axia 16 LED 500mA	28 Watts	5.00 Metres	Cast Iron	
Y	6	STREET LIGHTING	BRADFORD AVENUE	CLEETHORPES	531077.03	408064.61	2019	18/10/2019	67769	Urbis	Axia 16 LED 500mA	28 Watts	5.00 Metres	Cast Iron	
Y	7	STREET LIGHTING	BRADFORD AVENUE	CLEETHORPES	531034.86	408046.36	2019	18/10/2019	67770	Urbis	Axia 16 LED 500mA	28 Watts	5.00 Metres	Cast Iron	
Y	8	STREET LIGHTING	BRADFORD AVENUE	CLEETHORPES	530999.78	408039.98	2019	18/10/2019	67771	Urbis	Axia 16 LED 500mA	28 Watts	5.00 Metres	Cast Iron	
Y	9	STREET LIGHTING	BRADFORD AVENUE	CLEETHORPES	530970.36	408019.07	2019	18/10/2019	67772	Urbis	Axia 16 LED 500mA	28 Watts	5.00 Metres	Cast Iron	
Y	10	STREET LIGHTING	BRADFORD AVENUE	CLEETHORPES	530929.25	408009.86	2019	18/10/2019	67773	Urbis	Axia 16 LED 500mA	28 Watts	5.00 Metres	Cast Iron	
Y	11	STREET LIGHTING	BRADFORD AVENUE	CLEETHORPES	530898.95	407988.6	2019	18/10/2019	67774	Urbis	Axia 16 LED 500mA	28 Watts	5.00 Metres	Cast Iron	
Y	12	STREET LIGHTING	BRADFORD AVENUE	CLEETHORPES	530859.8	407979.84	2019	18/10/2019	67775	Urbis	Axia 16 LED 500mA	28 Watts	5.00 Metres	Cast Iron	
Y	1	STREET LIGHTING	CHICHESTER ROAD	CLEETHORPES	531565.43	407548.11	2021	23/09/2021	68610	Urbis	Teceo 48 LED 500mA	79 Watts	8.00 Metres	Galvanised Steel	
Y	2	STREET LIGHTING	CHICHESTER ROAD	CLEETHORPES	531540.29	407531.54	1993		45875	Urbis	AXIA 3.2 32 LED 510mA	50 Watts	8.00 Metres	Galvanised Steel	
Y	3	STREET LIGHTING	CHICHESTER ROAD	CLEETHORPES	531515.48	407514.64	1993		45876	1 Urbis LED	Teceo 40 LED 500mA	64 Watts	8.00 Metres	Galvanised Steel	
Y	4	STREET LIGHTING	CHICHESTER ROAD	CLEETHORPES	531485.51	407509.45	2021	23/09/2021	68819	Urbis	Teceo 48 LED 500mA	79 Watts	8.00 Metres	Galvanised Steel	
Y	5	STREET LIGHTING	CHICHESTER ROAD	CLEETHORPES	531461.99	407478.49	2021	23/09/2021	68820	Urbis	Teceo 48 LED 500mA	79 Watts	8.00 Metres	Galvanised Steel	
Y	6	STREET LIGHTING	CHICHESTER ROAD	CLEETHORPES	531439.79	407463.31	2021	23/09/2021	68821	Urbis	Teceo 48 LED 500mA	79 Watts	8.00 Metres	Galvanised Steel	
Y	7	STREET LIGHTING	CHICHESTER ROAD	CLEETHORPES	531410.42	407459.16	1993		45880	1 Urbis LED	Teceo 40 LED 500mA	64 Watts	8.00 Metres	Galvanised Steel	
Y	8	STREET LIGHTING	CHICHESTER ROAD	CLEETHORPES	531395.73	407436.38	2007		45881	Urbis	AXIA 3.2 32 LED 510mA	50 Watts	10.00 Metres	Steel	
Y	9	STREET LIGHTING	CHICHESTER ROAD	CLEETHORPES	531358.45	407420.08	2021	23/09/2021	68822	Urbis	Teceo 48 LED 500mA	79 Watts	8.00 Metres	Galvanised Steel	
Y	10	STREET LIGHTING	CHICHESTER ROAD	CLEETHORPES	531325.45	407411.91	2021	23/09/2021	68823	Urbis	Teceo 48 LED 500mA	79 Watts	8.00 Metres	Galvanised Steel	
Y	11	STREET LIGHTING	CHICHESTER ROAD	CLEETHORPES	531296.68	407408.54	2021	23/09/2021	68824	Urbis	Teceo 48 LED 500mA	79 Watts	8.00 Metres	Galvanised Steel	
Y	12	STREET LIGHTING	CHICHESTER ROAD	CLEETHORPES	531262.7	407407.89	1993		45885	Urbis	AXIA 3.2 32 LED 510mA	50 Watts	8.00 Metres	Galvanised Steel	
Y	13	STREET LIGHTING	CHICHESTER ROAD	CLEETHORPES	531231.69	407419.94	1993		45886	1 Urbis LED	Teceo 40 LED 500mA	64 Watts	8.00 Metres	Galvanised Steel	
Y	14	STREET LIGHTING	CHICHESTER ROAD	CLEETHORPES	531196.75	407407.35	1993		45887	1 Urbis LED	Teceo 40 LED 500mA	64 Watts	8.00 Metres	Galvanised Steel	
Y	15	STREET LIGHTING	CHICHESTER ROAD	CLEETHORPES	531170.24	407419.42	1993		45888	1 Urbis LED	Teceo 40 LED 500mA	64 Watts	8.00 Metres	Galvanised Steel	
Y	16	STREET LIGHTING	CHICHESTER ROAD	CLEETHORPES	531143.36	407407.67	2016		45889	1 Urbis LED	Teceo 48 LED 500mA	79 Watts	8.00 Metres	Galvanised Steel	
Y	17	STREET LIGHTING	CHICHESTER ROAD	CLEETHORPES	531114.01	407406.64	2021	23/09/2021	68825	Urbis	Teceo 48 LED 500mA	79 Watts	8.00 Metres	Galvanised Steel	
Y	18	STREET LIGHTING	CHICHESTER ROAD	CLEETHORPES	531078.8	407418.76	1993		45891	1 Urbis LED	Teceo 40 LED 500mA	64 Watts	8.00 Metres	Galvanised Steel	
Y	19	STREET LIGHTING	CHICHESTER ROAD	CLEETHORPES	531048.43	407406.35	2021	23/09/2021	68826	Urbis	Teceo 48 LED 500mA	79 Watts	8.00 Metres	Galvanised Steel	
Y	20	STREET LIGHTING	CHICHESTER ROAD	CLEETHORPES	531015.64	407405.98	1993		45893	Urbis	AXIA 3.2 32 LED 510mA	50 Watts	8.00 Metres	Galvanised Steel	
Y	21	STREET LIGHTING	CHICHESTER ROAD	CLEETHORPES	530985.93	407405.33	2021	23/09/2021	68827	Urbis	Teceo 48 LED 500mA	79 Watts	8.00 Metres	Galvanised Steel	
Y	22	STREET LIGHTING	CHICHESTER ROAD	CLEETHORPES	530952.8	407417.75	1993		45895	Urbis	AXIA 3.2 32 LED 510mA	50 Watts	8.00 Metres	Galvanised Steel	
Y	23	STREET LIGHTING	CHICHESTER ROAD	CLEETHORPES	530919.63	407404.4	1993		45896	1 Urbis LED	Teceo 40 LED 500mA	64 Watts	8.00 Metres	Galvanised Steel	
Y	24	STREET LIGHTING	CHICHESTER ROAD	CLEETHORPES	530890.9	407404.21	1993		45897	Urbis	AXIA 3.2 32 LED 510mA	50 Watts	8.00 Metres	Galvanised Steel	
Y	25	STREET LIGHTING	CHICHESTER ROAD	CLEETHORPES	530855.33	407404.4	1993		45898	1 Urbis LED	Teceo 40 LED 500mA	64 Watts	8.00 Metres	Galvanised Steel	
Y	26	STREET LIGHTING	CHICHESTER ROAD	CLEETHORPES	530823.18	407404.84	1993		45899	1 Urbis LED	Teceo 40 LED 500mA	64 Watts	8.00 Metres	Galvanised Steel	
Y	27	STREET LIGHTING	CHICHESTER ROAD	CLEETHORPES	530792.04	407417.81	1993		45900	1 Urbis LED	Teceo 40 LED 500mA	64 Watts	8.00 Metres	Galvanised Steel	
Y	28	STREET LIGHTING	CHICHESTER ROAD	CLEETHORPES	530761.41	407407.88	1993		45901	1 Urbis LED	Teceo 40 LED 500mA	64 Watts	8.00 Metres	Galvanised Steel	
Y	29	STREET LIGHTING	CHICHESTER ROAD	CLEETHORPES	530733.31	407417.56	1993		45902	1 Urbis LED	Teceo 40 LED 500mA	64 Watts	8.00 Metres	Galvanised Steel	
Y	30	STREET LIGHTING	CHICHESTER ROAD	CLEETHORPES	530707.91	407441.69	2021	23/09/2021	68828	Urbis	Teceo 48 LED 500mA	79 Watts	8.00 Metres	Galvanised Steel	
Y	31	STREET LIGHTING	CHICHESTER ROAD	CLEETHORPES	530676.06	407443.59	2021	23/09/2021	68829	Urbis	Teceo 48 LED 500mA	79 Watts	8.00 Metres	Galvanised Steel	
Y	32	STREET LIGHTING	CHICHESTER ROAD	CLEETHORPES	530656.06	407468.85	2021	23/09/2021	68830	Urbis	Teceo 48 LED 500mA	79 Watts	8.00 Metres	Galvanised Steel	
Y	33	STREET LIGHTING	CHICHESTER ROAD	CLEETHORPES	530622.17	407475.53	2015	28/10/2015	45906	1 Urbis LED	Teceo 40 LED 500mA	64 Watts	8.00 Metres	Galvanised Steel	
Y	34	STREET LIGHTING	CHICHESTER ROAD	CLEETHORPES	530609.89	407499.82	1993		45907	1 Urbis LED	Teceo 40 LED 500mA	64 Watts	8.00 Metres	Galvanised Steel	
Y	35	STREET LIGHTING	CHICHESTER ROAD	CLEETHORPES	530576.62	407514.56	2021	23/09/2021	69074	Urbis	Teceo 48 LED 500mA	79 Watts	8.00 Metres	Galvanised Steel	
Y	36	STREET LIGHTING	CHICHESTER ROAD	CLEETHORPES	530554.58	407536.53	1993		45909	1 Urbis LED	Teceo 40 LED 500mA	64 Watts	8.00 Metres	Galvanised Steel	
Y	37	STREET LIGHTING	CHICHESTER ROAD	CLEETHORPES	530525.46	407564.08	1993		45910	1 Urbis LED	Teceo 40 LED 500mA	64 Watts	8.00 Metres	Galvanised Steel	
Y	38	STREET LIGHTING	CHICHESTER ROAD	CLEETHORPES	530508.12	407599.97	1993		45911	Urbis	AXIA 3.2 32 LED 510mA	50 Watts	8.00 Metres	Galvanised Steel	
Y	39	STREET LIGHTING	CHICHESTER ROAD	CLEETHORPES	530473.23	407615.47	2021	23/09/2021	68831	Urbis	Teceo 48 LED 500mA	79 Watts	8.00 Metres	Galvanised Steel	
Y	40	STREET LIGHTING	CHICHESTER ROAD	CLEETHORPES	530462.42	407645.25	2021	23/09/2021	68832	Urbis	Teceo 48 LED 500mA	79 Watts	8.00 Metres	Galvanised Steel	
Y	1	STREET LIGHTING	DAGGETT ROAD	CLEETHORPES	531055.18	407614.07	2011		47231	1 Urbis LED	Axia 16 LED 500mA	28 Watts	6.00 Metres	Steel	

Y	2	STREET LIGHTING	DAGGETT ROAD	CLEETHORPES	531083.53	407635.99	2011		47232	1 Urbis LED	Axia 16 LED 500mA	28 Watts	6.00 Metres	Steel	
Y	3	STREET LIGHTING	DAGGETT ROAD	CLEETHORPES	531115.85	407636.73	2011		47233	1 Urbis LED	Axia 16 LED 500mA	28 Watts	6.00 Metres	Steel	
Y	4	STREET LIGHTING	DAGGETT ROAD	CLEETHORPES	531142.82	407658.34	2011		47234	1 Urbis LED	Axia 16 LED 500mA	28 Watts	6.00 Metres	Steel	
Y	5	STREET LIGHTING	DAGGETT ROAD	CLEETHORPES	531177.59	407659.52	2011		47235	1 Urbis LED	Axia 16 LED 500mA	28 Watts	6.00 Metres	Steel	
Y	6	STREET LIGHTING	DAGGETT ROAD	CLEETHORPES	531192.94	407676.7	2011		47236	1 Urbis LED	Axia 16 LED 500mA	28 Watts	6.00 Metres	Steel	
Y	7	STREET LIGHTING	DAGGETT ROAD	CLEETHORPES	531218.79	407686.31	2011		47237	1 Urbis LED	Axia 16 LED 500mA	28 Watts	6.00 Metres	Steel	
Y	8	STREET LIGHTING	DAGGETT ROAD	CLEETHORPES	531256.69	407689.26	2011		47238	1 Urbis LED	Axia 16 LED 500mA	28 Watts	6.00 Metres	Steel	
Y	9	STREET LIGHTING	DAGGETT ROAD	CLEETHORPES	531283.9	407712.12	2011		47239	1 Urbis LED	Axia 16 LED 500mA	28 Watts	6.00 Metres	Steel	
Y	10	STREET LIGHTING	DAGGETT ROAD	CLEETHORPES	531317.24	407724.17	2011		47240	1 Urbis LED	Axia 16 LED 500mA	28 Watts	6.00 Metres	Steel	
Y	11	STREET LIGHTING	DAGGETT ROAD	CLEETHORPES	531327.19	407704.96	2011		47241	1 Urbis LED	Axia 16 LED 500mA	28 Watts	6.00 Metres	Steel	
Y	12	STREET LIGHTING	DAGGETT ROAD	CLEETHORPES	531328.22	407673.37	2011		47242	1 Urbis LED	Axia 16 LED 500mA	28 Watts	6.00 Metres	Steel	
Y	13	STREET LIGHTING	DAGGETT ROAD	CLEETHORPES	531356.92	407650.2	2011		47243	1 Urbis LED	Axia 16 LED 500mA	28 Watts	6.00 Metres	Steel	
Y	14	STREET LIGHTING	DAGGETT ROAD	CLEETHORPES	531367.26	407612.49	2011		47244	1 Urbis LED	Axia 16 LED 500mA	28 Watts	6.00 Metres	Steel	
Y	15	STREET LIGHTING	DAGGETT ROAD	CLEETHORPES	531392.96	407594.33	2011		47245	1 Urbis LED	Axia 16 LED 500mA	28 Watts	6.00 Metres	Steel	
Y	16	STREET LIGHTING	DAGGETT ROAD	CLEETHORPES	531396.41	407566.46	2011		47246	1 Urbis LED	Axia 16 LED 500mA	28 Watts	6.00 Metres	Steel	
Y	17	STREET LIGHTING	DAGGETT ROAD	CLEETHORPES	531410.9	407543.38	2010		47247	1 Urbis LED	Axia 16 LED 500mA	28 Watts	6.00 Metres	Steel	
Y	18	STREET LIGHTING	DAGGETT ROAD	CLEETHORPES	531437.02	407524.82	2011		47248	1 Urbis LED	Axia 16 LED 500mA	28 Watts	6.00 Metres	Steel	
Y	19	STREET LIGHTING	DAGGETT ROAD	CLEETHORPES	531441.08	407496.27	2011		47249	1 Urbis LED	Axia 16 LED 500mA	28 Watts	6.00 Metres	Steel	
Y	1	STREET LIGHTING	GARBUTT PLACE	CLEETHORPES	531166.05	407684.91	2014		49060	1 Urbis LED	Axia 16 LED 500mA	28 Watts	6.00 Metres	Galvanised Steel	
Y	2	STREET LIGHTING	GARBUTT PLACE	CLEETHORPES	531156.94	407726.75	2014		49061	1 Urbis LED	Axia 16 LED 500mA	28 Watts	6.00 Metres	Galvanised Steel	
Y	3	STREET LIGHTING	GARBUTT PLACE	CLEETHORPES	531145.8	407750.37	2014		49062	1 Urbis LED	Axia 16 LED 500mA	28 Watts	6.00 Metres	Galvanised Steel	
Y	1	STREET LIGHTING	HARDYS ROAD	CLEETHORPES	530823.07	408027.62	2007	20/03/2007	50147	1 Urbis LED	Teceo 48 LED 500mA	79 Watts	8.00 Metres	Steel	
Y	2	STREET LIGHTING	HARDYS ROAD	CLEETHORPES	530837.87	407999.73	2007	30/03/2007	50148	1 Urbis LED	Teceo 48 LED 500mA	79 Watts	8.00 Metres	Steel	
Y	3	STREET LIGHTING	HARDYS ROAD	CLEETHORPES	530840.96	407968.4	2007	20/03/2007	50149	1 Urbis LED	Teceo 48 LED 500mA	79 Watts	8.00 Metres	Steel	
Y	4	STREET LIGHTING	HARDYS ROAD	CLEETHORPES	530871.38	407935.83	2007	20/03/2007	50150	1 Urbis LED	Teceo 48 LED 500mA	79 Watts	8.00 Metres	Steel	
Y	5	STREET LIGHTING	HARDYS ROAD	CLEETHORPES	530877.1	407899.13	2007	20/03/2007	50151	1 Urbis LED	Teceo 48 LED 500mA	79 Watts	8.00 Metres	Steel	
Y	6	STREET LIGHTING	HARDYS ROAD	CLEETHORPES	530908.55	407865.6	2007	20/03/2007	50152	1 Urbis LED	Teceo 48 LED 500mA	79 Watts	8.00 Metres	Steel	
Y	7	STREET LIGHTING	HARDYS ROAD	CLEETHORPES	530911.78	407833.23	2007	20/03/2007	50153	1 Urbis LED	Teceo 48 LED 500mA	79 Watts	8.00 Metres	Steel	
Y	8	STREET LIGHTING	HARDYS ROAD	CLEETHORPES	530935.21	407814.82	2007	20/03/2007	50154	1 Urbis LED	Teceo 48 LED 500mA	79 Watts	8.00 Metres	Steel	
Y	9	STREET LIGHTING	HARDYS ROAD	CLEETHORPES	530948.56	407789.62	2007	20/03/2007	50155	1 Urbis LED	Teceo 48 LED 500mA	79 Watts	8.00 Metres	Steel	
Y	10	STREET LIGHTING	HARDYS ROAD	CLEETHORPES	530953.69	407753.43	2007	20/03/2007	50156	1 Urbis LED	Teceo 48 LED 500mA	79 Watts	8.00 Metres	Steel	
Y	11	STREET LIGHTING	HARDYS ROAD	CLEETHORPES	530970.62	407721.31	2007	20/03/2007	50157	1 Urbis LED	Teceo 48 LED 500mA	79 Watts	8.00 Metres	Steel	
Y	12	STREET LIGHTING	HARDYS ROAD	CLEETHORPES	530998.35	407694.59	2007	20/03/2007	50158	Urbis	AXIA 3.2 32 LED 630 mA	62 Watts	8.00 Metres	Steel	
Y	13	STREET LIGHTING	HARDYS ROAD	CLEETHORPES	531000.59	407664.71	2007	20/03/2007	50159	1 Urbis LED	Teceo 48 LED 500mA	79 Watts	8.00 Metres	Steel	
Y	14	STREET LIGHTING	HARDYS ROAD	CLEETHORPES	531025.57	407642.88	2007	20/03/2007	50160	1 Urbis LED	Teceo 48 LED 500mA	79 Watts	8.00 Metres	Steel	
Y	15	STREET LIGHTING	HARDYS ROAD	CLEETHORPES	531028.73	407609.62	2007	20/03/2007	50161	1 Urbis LED	Teceo 48 LED 500mA	79 Watts	8.00 Metres	Steel	
Y	16	STREET LIGHTING	HARDYS ROAD	CLEETHORPES	531048.81	407578.28	2007	20/03/2007	50162	1 Urbis LED	Teceo 48 LED 500mA	79 Watts	8.00 Metres	Steel	
Y	17	STREET LIGHTING	HARDYS ROAD	CLEETHORPES	531040.84	407547.92	2007	20/03/2007	50163	1 Urbis LED	Teceo 48 LED 500mA	79 Watts	8.00 Metres	Steel	
Y	18	STREET LIGHTING	HARDYS ROAD	CLEETHORPES	531040.67	407518.52	2007	20/03/2007	50164	1 Urbis LED	Teceo 48 LED 500mA	79 Watts	8.00 Metres	Steel	
Y	19	STREET LIGHTING	HARDYS ROAD	CLEETHORPES	531052.51	407492.6	2007	20/03/2007	50165	1 Urbis LED	Teceo 48 LED 500mA	79 Watts	8.00 Metres	Steel	
Y	20	STREET LIGHTING	HARDYS ROAD	CLEETHORPES	531050.99	407460.03	2007	20/03/2007	50166	1 Urbis LED	Teceo 48 LED 500mA	79 Watts	8.00 Metres	Steel	
Y	21	STREET LIGHTING	HARDYS ROAD	CLEETHORPES	531039.02	407432.35	2007	20/03/2007	50167	1 Urbis LED	Teceo 48 LED 500mA	79 Watts	8.00 Metres	Steel	
Y	1	STREET LIGHTING	HOWLETT ROAD	CLEETHORPES	531202	407835.3	2015	30/07/2015	51019	1 Urbis LED	Axia 16 LED 500mA	28 Watts	6.00 Metres	Galvanised Steel	
Y	2	STREET LIGHTING	HOWLETT ROAD	CLEETHORPES	531207.19	407798.59	2015	30/07/2015	51020	1 Urbis LED	Axia 16 LED 500mA	28 Watts	6.00 Metres	Galvanised Steel	
Y	3	STREET LIGHTING	HOWLETT ROAD	CLEETHORPES	531234.02	407758.09	2015	30/07/2015	51021	1 Urbis LED	Axia 16 LED 500mA	28 Watts	6.00 Metres	Galvanised Steel	
Y	4	STREET LIGHTING	HOWLETT ROAD	CLEETHORPES	531241.87	407712.58	2015	30/07/2015	51022	1 Urbis LED	Axia 16 LED 500mA	28 Watts	6.00 Metres	Galvanised Steel	
Y	1	STREET LIGHTING	LANGLEY PLACE	CLEETHORPES	531388.83	407630.08	2014		52257	Urbis	Axia 16 LED 350mA	19 Watts	6.00 Metres	Galvanised Steel	
Y	2	STREET LIGHTING	LANGLEY PLACE	CLEETHORPES	531417.69	407641.14	2014		52258	Urbis	Axia 16 LED 350mA	19 Watts	6.00 Metres	Galvanised Steel	
Y	3	STREET LIGHTING	LANGLEY PLACE	CLEETHORPES	531441.1	407648.29	2014		52259	Urbis	Axia 16 LED 350mA	19 Watts	6.00 Metres	Galvanised Steel	
Y	1	STREET LIGHTING	LINDUM ROAD	CLEETHORPES	531195.05	408030.21	2018	16/08/2018	66980	Urbis	Axia 16 LED 500mA	28 Watts	6.00 Metres	Galvanised Steel	
Y	2	STREET LIGHTING	LINDUM ROAD	CLEETHORPES	531155.89	408021.78	2018	16/08/2018	67127	Urbis	Axia 16 LED 500mA	28 Watts	6.00 Metres	Galvanised Steel	
Y	3	STREET LIGHTING	LINDUM ROAD	CLEETHORPES	531119.94	407997.88	2018	16/08/2018	67128	Urbis	Axia 16 LED 500mA	28 Watts	6.00 Metres	Galvanised Steel	
Y	4	STREET LIGHTING	LINDUM ROAD	CLEETHORPES	531067.52	407975.38	2018	16/08/2018	67129	Urbis	Axia 16 LED 500mA	28 Watts	6.00 Metres	Galvanised Steel	
Y	5	STREET LIGHTING	LINDUM ROAD	CLEETHORPES	531038.69	407974.29	2008		52594	1 Urbis LED	Axia 16 LED 500mA	28 Watts	6.00 Metres	Steel	
Y	6	STREET LIGHTING	LINDUM ROAD	CLEETHORPES	531004.25	407948.27	2018	16/08/2018	67130	Urbis	Axia 16 LED 500mA	28 Watts	6.00 Metres	Galvanised Steel	
Y	7	STREET LIGHTING	LINDUM ROAD	CLEETHORPES	530965.49	407942.04	2018	16/08/2018	67131	Urbis	Axia 16 LED 500mA	28 Watts	6.00 Metres	Galvanised Steel	
Y	8	STREET LIGHTING	LINDUM ROAD	CLEETHORPES	530936.37	407918.75	2018	16/08/2018	67132	Urbis	Axia 16 LED 500mA	28 Watts	6.00 Metres	Galvanised Steel	
Y	9	STREET LIGHTING	LINDUM ROAD	CLEETHORPES	530895.61	407912.32	2018	16/08/2018	67133	Urbis	Axia 16 LED 500mA	28 Watts	6.00 Metres	Galvanised Steel	
Y	1	STREET LIGHTING	MINSHULL ROAD	CLEETHORPES	530892.25	407709.39	2006		53750	Urbis	Axia 16 LED 350mA	19 Watts	6.00 Metres	Stainless Steel	
Y	2	STREET LIGHTING	MINSHULL ROAD	CLEETHORPES	530901.37	407679.22	2006		53751	Urbis	Axia 16 LED 350mA	19 Watts	6.00 Metres	Stainless Steel	
Y	3	STREET LIGHTING	MINSHULL ROAD	CLEETHORPES	530925.4	407656.24	2006		53752	Urbis	Axia 16 LED 350mA	19 Watts	6.00 Metres	Stainless Steel	
Y	4	STREET LIGHTING	MINSHULL ROAD	CLEETHORPES	530931.19	407622.48	2006		53753	Urbis	Axia 16 LED 350mA	19 Watts	6.00 Metres	Stainless Steel	
Y	5	STREET LIGHTING	MINSHULL ROAD	CLEETHORPES	530956.55	407597.1	2006		53754	Urbis	Axia 16 LED 350mA	19 Watts	6.00 Metres	Stainless Steel	
Y	6	STREET LIGHTING	MINSHULL ROAD	CLEETHORPES	530967.14	407571.74	2003		53755	Urbis	Axia 16 LED 350mA	19 Watts	6.00 Metres	Stainless Steel	
Y	7	STREET LIGHTING	MINSHULL ROAD	CLEETHORPES	530959.55	407539.13	2003		53756	Urbis	Axia 16 LED 350mA	19 Watts	6.00 Metres	Stainless Steel	
Y	8	STREET LIGHTING	MINSHULL ROAD	CLEETHORPES	530959.25	407510.92	2003		53757	Urbis	Axia 16 LED 350mA	19 Watts	6.00 Metres	Stainless Steel	
Y	1	STREET LIGHTING	PEARSON ROAD	CLEETHORPES	531028.58	407487.9	2005		55090	Urbis	Axia 16 LED 350mA	19 Watts	6.00 Metres	Stainless Steel	
Y	2	STREET LIGHTING	PEARSON ROAD	CLEETHORPES	530997.07	407497.91	2005		55091	Urbis	Axia 16 LED 350mA	19 Watts	6.00 Metres	Galvanised Steel	
Y	3	STREET LIGHTING	PEARSON ROAD	CLEETHORPES	530963.62	407488.91	2003		55092	Urbis	Axia 16 LED 350mA	19 Watts	6.00 Metres	Stainless Steel	
Y	4	STREET LIGHTING	PEARSON ROAD	CLEETHORPES	530938.61	407498.35	2003		55093	Urbis	Axia 8 LED 350mA	10 Watts	6.00 Metres	Stainless Steel	
Y	5	STREET LIGHTING	PEARSON ROAD	CLEETHORPES	530909.52	407497.33	2003		55094	Urbis	Axia 16 LED 350mA	19 Watts	6.00 Metres	Stainless Steel	
Y	6	STREET LIGHTING	PEARSON ROAD	CLEETHORPES	530883.37	407486.6	1992		55095	Urbis	Axia 16 LED 350mA	19 Watts	6.00 Metres	Galvanised Steel	
Y	7	STREET LIGHTING	PEARSON ROAD	CLEETHORPES	530852.9	407497.54	2005		55096	Urbis	Axia 16 LED 350mA	19 Watts	6.00 Metres	Stainless Steel	
Y	8	STREET LIGHTING	PEARSON ROAD	CLEETHORPES	530827.61	407486.77	2005		55097	Urbis	Axia 16 LED 350mA	19 Watts	6.00 Metres	Stainless Steel	
Y	9	STREET LIGHTING	PEARSON ROAD	CLEETHORPES	530796.54	407490.14	2004		55098	Urbis	Axia 16 LED 350mA	19 Watts	6.00 Metres	Stainless Steel	
Y	10	STREET LIGHTING	PEARSON ROAD	CLEETHORPES	530773.31	407508.65	2003		55099	Urbis	Axia 16 LED 350mA	19 Watts	6.00 Metres	Stainless Steel	
Y	11	STREET LIGHTING	PEARSON ROAD	CLEETHORPES	530744.82	407520.32	2005		55100	Urbis	Axia 16 LED 350mA	19 Watts	6.00 Metres	Stainless Steel	
Y	12	STREET LIGHTING	PEARSON ROAD	CLEETHORPES	530724.59	407535.45	2003		55101	1 Urbis LED	Axia 16 LED 500mA	28 Watts	6.00 Metres	Stainless Steel	
Y	13	STREET LIGHTING	PEARSON ROAD	CLEETHORPES	530713.1	407562.6	2003		55102	Urbis	Axia 16 LED 350mA	19 Watts	6.00 Metres	Stainless Steel	
Y	14	STREET LIGHTING	PEARSON ROAD	CLEETHORPES	530697.04	407531.66	1993		55103	Urbis	Axia 16 LED 350mA	19 Watts	6.00 Metres	Galvanised Steel	
Y	15	STREET LIGHTING	PEARSON ROAD	CLEETHORPES	530669.45	407547.54	1993		55104	Urbis	Axia 16 LED 350mA	19 Watts	6.00 Metres	Galvanised Steel	
Y	1	STREET LIGHTING	RYMER PLACE	CLEETHORPES	531330.98	407744.59	2015	30/07/2015	56453	Urbis	Axia 16 LED 350mA	19 Watts	6.00 Metres	Galvanised Steel	
Y	2	STREET LIGHTING	RYMER PLACE	CLEETHORPES	531314.66	407776.74	2015	30/07/2015	56454	Urbis	Axia 16 LED 350mA	19 Watts	6.00 Metres	Galvanised Steel	
Y	3	STREET LIGHTING	RYMER PLACE	CLEETHORPES	531319.72	407813.38	2015	30/07/2015	56455	Urbis	Axia 16 LED 350mA	19 Watts	6.00 Metres	Galvanised Steel	
Y	1	STREET LIGHTING	SEACROFT ROAD	CLEETHORPES	531199.94	408102.73	2015	30/07/2015	56795	1 Urbis LED	Axia 16 LED 500mA	28 Watts	6.00 Metres	Galvanised Steel	
Y	2	STREET LIGHTING	SEACROFT ROAD	CLEETHORPES	531205.17	408074.33	2015	30/07/2015	56796	1 Urbis LED	Axia 16 LED 500mA	28 Watts	6.00 Metres	Galvanised Steel	
Y	3	STREET LIGHTING	SEACROFT ROAD	CLEETHORPES	531229.48	408051.03	2015	30/07/2015	56797	1 Urbis LED	Axia 16 LED 500mA	28 Watts	6.00 Metres	Galvanised Steel	
Y	4	STREET LIGHTING	SEACROFT ROAD	CLEETHORPES	531243.5	408013.84	1983	01/05/2000	56798	1 Urbis LED	Axia 16 LED 500mA	28 Watts	6.00 Metres	Galvanised Steel	
Y	5	STREET LIGHTING	SEACROFT ROAD	CLEETHORPES	531275.78	407983.52	1983		56799	1 Urbis LED	Axia 16 LED 500mA	28 Watts	6.00 Metres	Galvanised Steel	
Y	6	STREET LIGHTING	SEACROFT ROAD	CLEETHORPES	531286.16	407950.87	2015	30/07/2015	56800	1 Urbis LED	Axia 16 LED 500mA	28 Watts	6.00 Metres	Galvanised Steel	
Y	1	STREET LIGHTING	SIGNHILLS AVENUE	CLEETHORPES	531240.94	407975.66	2018	17/07/2018	67241	Urbis	Axia 16 LED 500mA	28 Watts	6.00 Metres	Galvanised Steel	
Y	2	STREET LIGHTING	SIGNHILLS AVENUE	CLEETHORPES	531215.45	407952.67	2018	17/07/2018	67242	Urbis	Axia 16 LED 500mA	28 Watts	6.00 Metres	Galvanised Steel	
Y	3	STREET LIGHTING	SIGNHILLS AVENUE	CLEETHORPES	531172.96	407946.23	2018	17/07/2018	67243	Urbis	Axia 16 LED 500mA	28 Watts	6.00 Metres	Galvanised Steel	
Y	4	STREET LIGHTING	SIGNHILLS AVENUE	CLEETHORPES	531141.34	407932.71	2018	17/07/2018	67244	Urbis	Axia 16 LED 500mA	28 Watts	6.00 Metres	Galvanised Steel	
Y	5	STREET LIGHTING	SIGNHILLS AVENUE	CLEETHORPES	531097.28	407902.96	2018	17/07/2018	67245	Urbis	Axia 16 LED 500mA	28 Watts	6.00 Metres	Galvanised Steel	
Y	6	STREET LIGHTING	SIGNHILLS AVENUE	CLEETHORPES	531057.78	407898.24	2018	17/07/2018	67246	Urbis	Axia 16 LED 500mA	28 Watts	6.00 Metres	Galvanised Steel	
Y	7	STREET LIGHTING	SIGNHILLS AVENUE	CLEETHORPES	531031.04	407876.21	2018	17/07/2018	67247	Urbis	Axia 16 LED 500mA	28 Watts	6.00 Metres	Galvanised Steel	
Y	8	STREET LIGHTING	SIGNHILLS AVENUE	CLEETHORPES	530995.95	407872.75	2018	17/07/2018	67248	Urbis	Axia 16 LED 500mA	28 Watts	6.00 Metres	Galvanised Steel	
Y	9	STREET LIGHTING	SIGNHILLS AVENUE	CLEETHORPES	530965.89	407849.15	2018	17/07/2018	67249	Urbis	Axia 16 LED 500mA	28 Watts	6.00 Metres	Galvanised Steel	
Y	10	STREET LIGHTING	SIGNHILLS AVENUE	CLEETHORPES	530928.29	407845.37	2018	17/07/2018	67250	Urbis	Axia 16 LED 500mA	28 Watts	6.00 Metres	Galvanised Steel	
Y	1	STREET LIGHTING	STRUBBY CLOSE	CLEETHORPES	531428.06	407560.33	2001		58544	Urbis	Axia 16 LED 350mA	19 Watts	6.00 Metres	Galvanised Steel	
Y	2	STREET LIGHTING	STRUBBY CLOSE	CLEETHORPES	531456.04	407565.14	2014		58545	Urbis	Axia 16 LED 350mA	19 Watts	6.00 Metres	Galvanised Steel	
Y	3	STREET LIGHTING	STRUBBY CLOSE	CLEETHORPES	531465.91	407585.01	2014		58546	Urbis	Axia 16 LED 350mA	19 Watts	6.00 Metres	Galvanised Steel	
Y	4	STREET LIGHTING	STRUBBY CLOSE	CLEETHORPES	531486.42	407575.46	2014		58547	Urbis	Axia 16 LED 350mA	19 Watts	6.00 Metres	Galvanised Steel	
Y	1	STREET LIGHTING	KINGSWAY	CLEETHORPES	531061.79	408459.8	2023	30/11/2023	69571	Urbis	Teceo 48 LED 700mA	104 Watts	12.00 Metres	Galvanised Steel	
Y	2	STREET LIGHTING	KINGSWAY	CLEETHORPES	531093.19	408440.88	1993		51859	1 Urbis LED	Teceo 48 LED 700mA	104 Watts	10.00 Metres	Galvanised Steel	
Y	3	STREET LIGHTING	KINGSWAY	CLEETHORPES	531100.65	408403.92	1993		51860	1 Urbis LED	Teceo 48 LED 700mA	104 Watts	10.00 Metres	Galvanised Steel	
Y	4	STREET LIGHTING	KINGSWAY	CLEETHORPES	531134.58	408381.39	1993		51861	1 Urbis LED	Teceo 48 LED 700mA	104 Watts	10.00 Metres	Galvanised Steel	
Y	5	STREET LIGHTING	KINGSWAY	CLEETHORPES	531141.41	408344.17	1993		51862	1 Urbis LED	Teceo 48 LED 700mA	104 Watts	10.00 Metres	Galvanised Steel	
Y	6	STREET LIGHTING	KINGSWAY	CLEETHORPES	531173.94	408324.49	1993		51863	1 Urbis LED	Teceo 48 LED 700mA	104 Watts	10.00 Metres	Galvanised Steel	

Y	7	STREET LIGHTING	KINGSWAY	CLEETHORPES	531192.67	408297.78	1993		51864	1 Urbis LED	Teceo 48 LED 700mA	104 Watts	10.00 Metres	Galvanised Steel	
Y	8	STREET LIGHTING	KINGSWAY	CLEETHORPES	531197.74	408263.85	1993		51865	1 Urbis LED	Teceo 48 LED 700mA	104 Watts	10.00 Metres	Galvanised Steel	
Y	9	STREET LIGHTING	KINGSWAY	CLEETHORPES	531232.17	408240.63	1993		51866	1 Urbis LED	Teceo 48 LED 700mA	104 Watts	10.00 Metres	Galvanised Steel	
Y	10	STREET LIGHTING	KINGSWAY	CLEETHORPES	531242.16	408201.32	1993		51867	1 Urbis LED	Teceo 48 LED 700mA	104 Watts	10.00 Metres	Galvanised Steel	
Y	11	STREET LIGHTING	KINGSWAY	CLEETHORPES	531274.57	408179.55	1993		51868	1 Urbis LED	Teceo 48 LED 700mA	104 Watts	10.00 Metres	Galvanised Steel	
Y	12	STREET LIGHTING	KINGSWAY	CLEETHORPES	531284.06	408138.92	1993		51869	1 Urbis LED	Teceo 48 LED 700mA	104 Watts	10.00 Metres	Galvanised Steel	
Y	13	STREET LIGHTING	KINGSWAY	CLEETHORPES	531316.84	408115.18	1993		51870	1 Urbis LED	Teceo 48 LED 700mA	104 Watts	10.00 Metres	Galvanised Steel	
Y	14	STREET LIGHTING	KINGSWAY	CLEETHORPES	531324.44	408077.15	1993		51871	1 Urbis LED	Teceo 48 LED 700mA	104 Watts	10.00 Metres	Galvanised Steel	
Y	15	STREET LIGHTING	KINGSWAY	CLEETHORPES	531360.39	408046.96	1993		51872	1 Urbis LED	Teceo 48 LED 700mA	104 Watts	10.00 Metres	Galvanised Steel	
Y	16	STREET LIGHTING	KINGSWAY	CLEETHORPES	531366.59	408009.49	1993		51873	1 Urbis LED	Teceo 48 LED 700mA	104 Watts	10.00 Metres	Galvanised Steel	
Y	17	STREET LIGHTING	KINGSWAY	CLEETHORPES	531392.24	407996.65	1998		51874	GoodLight	60 LED Bulb	60 Watts	12.00 Metres	Steel	
Y	18	STREET LIGHTING	KINGSWAY	CLEETHORPES	531421.88	407986.06	1998		51875	GoodLight	40 LED Bulb	40 Watts	10.00 Metres	Steel	
Y	19	STREET LIGHTING	KINGSWAY	CLEETHORPES	531416.91	407968.11	1998		51876	GoodLight	60 LED Bulb	60 Watts	12.00 Metres	Steel	
Y	20	STREET LIGHTING	KINGSWAY	CLEETHORPES	531415.07	407944.08	1998		51877	GoodLight	60 LED Bulb	60 Watts	12.00 Metres	Steel	
Y	21	STREET LIGHTING	KINGSWAY	CLEETHORPES	531396.93	407922.82	1998		51878	GoodLight	60 LED Bulb	60 Watts	12.00 Metres	Steel	
Y	22	STREET LIGHTING	KINGSWAY	CLEETHORPES	531384.14	407948.77	1998		51879	GoodLight	60 LED Bulb	60 Watts	12.00 Metres	Steel	
Y	23	STREET LIGHTING	KINGSWAY	CLEETHORPES	531387.45	407972.07	1998		51880	GoodLight	60 LED Bulb	60 Watts	12.00 Metres	Steel	
Y	1	STREET LIGHTING	WEEKES ROAD	CLEETHORPES	530825.66	407654.91	2006		59925	1 Urbis LED	Teceo 40 LED 500mA	64 Watts	6.00 Metres	Stainless Steel	
Y	2	STREET LIGHTING	WEEKES ROAD	CLEETHORPES	530840.72	407620.54	2006		59926	1 Urbis LED	Teceo 40 LED 500mA	64 Watts	6.00 Metres	Stainless Steel	
Y	3	STREET LIGHTING	WEEKES ROAD	CLEETHORPES	530861.61	407595.86	2003		59927	1 Urbis LED	Teceo 40 LED 500mA	64 Watts	6.00 Metres	Stainless Steel	
Y	4	STREET LIGHTING	WEEKES ROAD	CLEETHORPES	530846.29	407582.51	2006		59928	1 Urbis LED	Teceo 40 LED 500mA	64 Watts	5.00 Metres	Stainless Steel	
Y	5	STREET LIGHTING	WEEKES ROAD	CLEETHORPES	530807.05	407567.89	2006		59929	1 Urbis LED	Teceo 40 LED 500mA	64 Watts	5.00 Metres	Stainless Steel	
Y	6	STREET LIGHTING	WEEKES ROAD	CLEETHORPES	530876.29	407569.78	2003		59930	1 Urbis LED	Teceo 40 LED 500mA	64 Watts	6.00 Metres	Stainless Steel	
Y	7	STREET LIGHTING	WEEKES ROAD	CLEETHORPES	530886.04	407537.7	2003		59932	1 Urbis LED	Teceo 40 LED 500mA	64 Watts	6.00 Metres	Stainless Steel	
Y	8	STREET LIGHTING	WEEKES ROAD	CLEETHORPES	530876.67	407507.45	1997		59933	1 Urbis LED	Teceo 40 LED 500mA	64 Watts	6.00 Metres	Galvanised Steel	
Y	1	STREET LIGHTING	QUEENS PARADE	CLEETHORPES	531209.62	408217.69	1998		55791	1 Urbis LED	Teceo 48 LED 700mA	104 Watts	10.00 Metres	Galvanised Steel	
Y	2	STREET LIGHTING	QUEENS PARADE	CLEETHORPES	531176.82	408208.86	1998		55792	1 Urbis LED	Teceo 48 LED 700mA	104 Watts	10.00 Metres	Galvanised Steel	
Y	3	STREET LIGHTING	QUEENS PARADE	CLEETHORPES	531148.59	408196.01	1998		55793	1 Urbis LED	Teceo 48 LED 700mA	104 Watts	10.00 Metres	Galvanised Steel	
Y	4	STREET LIGHTING	QUEENS PARADE	CLEETHORPES	531121.37	408184.55	1998		55794	1 Urbis LED	Teceo 48 LED 700mA	104 Watts	10.00 Metres	Galvanised Steel	
Y	5	STREET LIGHTING	QUEENS PARADE	CLEETHORPES	531089.6	408171.07	1998		55795	1 Urbis LED	Teceo 48 LED 700mA	104 Watts	10.00 Metres	Galvanised Steel	
Y	6	STREET LIGHTING	QUEENS PARADE	CLEETHORPES	531065.42	408147.85	1998		55796	1 Urbis LED	Teceo 48 LED 700mA	104 Watts	10.00 Metres	Galvanised Steel	
Y	7	STREET LIGHTING	QUEENS PARADE	CLEETHORPES	531033.65	408134.36	1998		55797	1 Urbis LED	Teceo 48 LED 700mA	104 Watts	10.00 Metres	Galvanised Steel	
Y	8	STREET LIGHTING	QUEENS PARADE	CLEETHORPES	531003.68	408134.69	1998		55798	1 Urbis LED	Teceo 48 LED 700mA	104 Watts	10.00 Metres	Galvanised Steel	
Y	9	STREET LIGHTING	QUEENS PARADE	CLEETHORPES	530975.79	408123.38	1998		55799	1 Urbis LED	Teceo 48 LED 700mA	104 Watts	10.00 Metres	Galvanised Steel	
Y	10	STREET LIGHTING	QUEENS PARADE	CLEETHORPES	530950.09	408099.65	1998		55800	1 Urbis LED	Teceo 48 LED 700mA	104 Watts	10.00 Metres	Galvanised Steel	
Y	11	STREET LIGHTING	QUEENS PARADE	CLEETHORPES	530911.61	408096.29	1998		55801	Urbis	AXIA 3.3 48 LED 540mA	78 Watts	10.00 Metres	Galvanised Steel	
Y	12	STREET LIGHTING	QUEENS PARADE	CLEETHORPES	530882.37	408071.2	1998		55802	1 Urbis LED	Teceo 48 LED 700mA	104 Watts	10.00 Metres	Galvanised Steel	
Y	13	STREET LIGHTING	QUEENS PARADE	CLEETHORPES	530851.74	408071.27	1998		55803	1 Urbis LED	Teceo 48 LED 700mA	104 Watts	10.00 Metres	Galvanised Steel	
Y	14	STREET LIGHTING	QUEENS PARADE	CLEETHORPES	530824.12	408045.64	1998		55804	1 Urbis LED	Teceo 48 LED 700mA	104 Watts	10.00 Metres	Galvanised Steel	
Y	1	STREET LIGHTING	CROMWELL ROAD	CLEETHORPES	531379.15	407921.63	1998		46943	GoodLight	60 LED Bulb	60 Watts	10.00 Metres	Steel	
Y	2	STREET LIGHTING	CROMWELL ROAD	CLEETHORPES	531362.79	407928.57	1963		46944	1 Urbis LED	Teceo 48 LED 700mA	104 Watts	8.00 Metres	Steel	
Y	3	STREET LIGHTING	CROMWELL ROAD	CLEETHORPES	531316.37	407899.86	1963		46945	1 Urbis LED	Teceo 48 LED 700mA	104 Watts	8.00 Metres	Steel	
Y	4	STREET LIGHTING	CROMWELL ROAD	CLEETHORPES	531276.87	407895.45	1963		46946	1 Urbis LED	Teceo 48 LED 700mA	104 Watts	8.00 Metres	Steel	
Y	5	STREET LIGHTING	CROMWELL ROAD	CLEETHORPES	531236.44	407869.01	2018	01/10/2018	67136	Urbis	Teceo 48 LED 700mA	104 Watts	8.00 Metres	Galvanised Steel	
Y	6	STREET LIGHTING	CROMWELL ROAD	CLEETHORPES	531187.48	407862.12	2018	01/10/2018	67360	Urbis	Teceo 48 LED 700mA	104 Watts	8.00 Metres	Galvanised Steel	
Y	7	STREET LIGHTING	CROMWELL ROAD	CLEETHORPES	531148.15	407835.01	1963		46949	1 Urbis LED	Teceo 48 LED 700mA	104 Watts	8.00 Metres	Steel	
Y	8	STREET LIGHTING	CROMWELL ROAD	CLEETHORPES	531101.82	407828.43	1963		46950	1 Urbis LED	Teceo 48 LED 700mA	104 Watts	8.00 Metres	Steel	
Y	9	STREET LIGHTING	CROMWELL ROAD	CLEETHORPES	531069.29	407805.03	1963		46951	1 Urbis LED	Teceo 48 LED 700mA	104 Watts	8.00 Metres	Steel	
Y	10	STREET LIGHTING	CROMWELL ROAD	CLEETHORPES	531026.65	407799.84	2018	01/10/2018	67361	Urbis	Teceo 48 LED 700mA	104 Watts	8.00 Metres	Galvanised Steel	
Y	11	STREET LIGHTING	CROMWELL ROAD	CLEETHORPES	531002.43	407778.83	1963		46953	1 Urbis LED	Teceo 48 LED 700mA	104 Watts	8.00 Metres	Steel	
Y	12	STREET LIGHTING	CROMWELL ROAD	CLEETHORPES	530974.08	407775.09	1963		46954	1 Urbis LED	Teceo 48 LED 700mA	104 Watts	8.00 Metres	Steel	
Y	1	STREET LIGHTING	CLEETHORPE LEISURE CENTRE CAR	CLEETHORPES	531494.08	408004.36	1990		61538	Philips		150 Watts	8.00 Metres	Steel	
Y	1	STREET LIGHTING	CLEETHORPE LEISURE CENTRE CAR	CLEETHORPES	531494.08	408004.36	1990		62070	Philips		150 Watts	8.00 Metres	Steel	
Y	2	STREET LIGHTING	CLEETHORPE LEISURE CENTRE CAR	CLEETHORPES	531499.38	407961.92	1990		61539	Philips		150 Watts	8.00 Metres	Galvanised Steel	
Y	2	STREET LIGHTING	CLEETHORPE LEISURE CENTRE CAR	CLEETHORPES	531499.38	407961.92	1990		62071	Philips		150 Watts	8.00 Metres	Galvanised Steel	
Y	3	STREET LIGHTING	CLEETHORPE LEISURE CENTRE CAR	CLEETHORPES	531506.96	407897.13	1998		46275	1 Urbis LED	Axia 16 LED 500mA	28 Watts	6.00 Metres	Steel	
Y	4	STREET LIGHTING	CLEETHORPE LEISURE CENTRE CAR	CLEETHORPES	531511.5	407880.08	1998		46276	1 Urbis LED	Axia 16 LED 500mA	28 Watts	6.00 Metres	Steel	
Y	5	STREET LIGHTING	CLEETHORPE LEISURE CENTRE CAR	CLEETHORPES	531496.73	407870.23	1998		46277	1 Urbis LED	Axia 16 LED 500mA	28 Watts	6.00 Metres	Steel	
Y	6	STREET LIGHTING	CLEETHORPE LEISURE CENTRE CAR	CLEETHORPES	531495.62	407854.31	1998		46278	1 Urbis LED	Axia 16 LED 500mA	28 Watts	6.00 Metres	Steel	
Y	7	STREET LIGHTING	CLEETHORPE LEISURE CENTRE CAR	CLEETHORPES	531517.19	407855.45	1998		46279	1 Urbis LED	Axia 16 LED 500mA	28 Watts	6.00 Metres	Steel	
Y	8	STREET LIGHTING	CLEETHORPE LEISURE CENTRE CAR	CLEETHORPES	531524.77	407830.06	1998		46280	1 Urbis LED	Axia 16 LED 500mA	28 Watts	6.00 Metres	Steel	
Y	1	STREET LIGHTING	KINGS ROAD AND MERIDIAN PARK	CLEETHORPES	531696.77	407393.46	2001		51825	1 Urbis LED	Teceo 48 LED 700mA	104 Watts	8.00 Metres	Galvanised Steel	
Y	2	STREET LIGHTING	KINGS ROAD AND MERIDIAN PARK	CLEETHORPES	531713.44	407369.78	2001		51826	1 Urbis LED	Teceo 48 LED 700mA	104 Watts	8.00 Metres	Galvanised Steel	
Y	3	STREET LIGHTING	KINGS ROAD AND MERIDIAN PARK	CLEETHORPES	531737.33	407383.58	2001		51827	1 Urbis LED	Teceo 48 LED 700mA	104 Watts	8.00 Metres	Galvanised Steel	
Y	4	STREET LIGHTING	KINGS ROAD AND MERIDIAN PARK	CLEETHORPES	531720.99	407408.12	2001		51828	1 Urbis LED	Teceo 48 LED 700mA	104 Watts	8.00 Metres	Galvanised Steel	
Y	1	STREET LIGHTING	THRUNSCOE LAND CAR PARK	CLEETHORPES	531891	407188.84	1982		59186	1 Urbis LED	Axia 16 LED 500mA	28 Watts	6.00 Metres	Steel	
Y	2	STREET LIGHTING	THRUNSCOE LAND CAR PARK	CLEETHORPES	531863.78	407215.36	1982		59187	1 Urbis LED	Axia 16 LED 500mA	28 Watts	5.00 Metres	Galvanised Steel	
Y	3	STREET LIGHTING	THRUNSCOE LAND CAR PARK	CLEETHORPES	531831.13	407265.42	1982		59188	1 Urbis LED	Axia 16 LED 500mA	28 Watts	5.00 Metres	Galvanised Steel	
Y	4	STREET LIGHTING	THRUNSCOE LAND CAR PARK	CLEETHORPES	531821.13	407280.93	1982		59189	1 Urbis LED	Axia 16 LED 500mA	28 Watts	5.00 Metres	Galvanised Steel	
Y	5	STREET LIGHTING	THRUNSCOE LAND CAR PARK	CLEETHORPES	531900.87	407151.47	1982		59190	1 Urbis LED	Axia 16 LED 500mA	28 Watts	5.00 Metres	Galvanised Steel	
Y	1	STREET LIGHTING	ALVINGHAM AVENUE	CLEETHORPES	530807.69	407197.65	1980		43123	Urbis	Axia 16 LED 350mA	19 Watts	5.00 Metres	Galvanised Steel	
Y	2	STREET LIGHTING	ALVINGHAM AVENUE	CLEETHORPES	530781.87	407200.5	1980		43124	Urbis	Axia 16 LED 350mA	19 Watts	5.00 Metres	Galvanised Steel	
Y	3	STREET LIGHTING	ALVINGHAM AVENUE	CLEETHORPES	530759.59	407210.43	1980		43125	Urbis	Axia 16 LED 350mA	19 Watts	5.00 Metres	Galvanised Steel	
Y	4	STREET LIGHTING	ALVINGHAM AVENUE	CLEETHORPES	530747.69	407191.76	1980		43126	Urbis	Axia 16 LED 350mA	19 Watts	5.00 Metres	Galvanised Steel	
Y	5	STREET LIGHTING	ALVINGHAM AVENUE	CLEETHORPES	530731.24	407169.68	1980		43127	Urbis	Axia 16 LED 350mA	19 Watts	5.00 Metres	Galvanised Steel	
Y	6	STREET LIGHTING	ALVINGHAM AVENUE	CLEETHORPES	530718.32	407142.22	1980		43128	Urbis	Axia 16 LED 350mA	19 Watts	5.00 Metres	Galvanised Steel	
Y	7	STREET LIGHTING	ALVINGHAM AVENUE	CLEETHORPES	530680.73	407146.65	1980		43129	Urbis	Axia 16 LED 350mA	19 Watts	5.00 Metres	Galvanised Steel	
Y	8	STREET LIGHTING	ALVINGHAM AVENUE	CLEETHORPES	530673.01	407166.46	1980		43130	Urbis	Axia 16 LED 350mA	19 Watts	5.00 Metres	Galvanised Steel	
Y	1	STREET LIGHTING	BEESBY DRIVE	CLEETHORPES	530841.77	407306.53	1981		43948	Urbis	Axia 16 LED 350mA	19 Watts	5.00 Metres	Galvanised Steel	
Y	2	STREET LIGHTING	BEESBY DRIVE	CLEETHORPES	530833.17	407277.55	1981		43949	Urbis	Axia 16 LED 350mA	19 Watts	5.00 Metres	Galvanised Steel	
Y	1	STREET LIGHTING	BISHOPTHORPE ROAD	CLEETHORPES	530782.54	407379.26	1988		44182	Urbis	Axia 16 LED 350mA	19 Watts	5.00 Metres	Galvanised Steel	
Y	2	STREET LIGHTING	BISHOPTHORPE ROAD	CLEETHORPES	530768.79	407358.3	2017		44183	Urbis	Axia 16 LED 350mA	19 Watts	6.00 Metres	Galvanised Steel	
Y	3	STREET LIGHTING	BISHOPTHORPE ROAD	CLEETHORPES	530753.22	407332.16	1988		44184	Urbis	Axia 16 LED 350mA	19 Watts	5.00 Metres	Galvanised Steel	
Y	4	STREET LIGHTING	BISHOPTHORPE ROAD	CLEETHORPES	530733.22	407331.97	1988		44185	Urbis	Axia 16 LED 350mA	19 Watts	5.00 Metres	Galvanised Steel	
Y	5	STREET LIGHTING	BISHOPTHORPE ROAD	CLEETHORPES	530704.62	407325.77	1989		44186	Urbis	Axia 16 LED 350mA	19 Watts	5.00 Metres	Galvanised Steel	
Y	6	STREET LIGHTING	BISHOPTHORPE ROAD	CLEETHORPES	530675.25	407338.74	1988		44187	Urbis	Axia 16 LED 350mA	19 Watts	5.00 Metres	Galvanised Steel	
Y	7	STREET LIGHTING	BISHOPTHORPE ROAD	CLEETHORPES	530659.3	407327.16	1989		44188	Urbis	Axia 16 LED 350mA	19 Watts	5.00 Metres	Galvanised Steel	
Y	8	STREET LIGHTING	BISHOPTHORPE ROAD	CLEETHORPES	530627.03	407309.31	1988		44189	Urbis	Axia 16 LED 350mA	19 Watts	5.00 Metres	Galvanised Steel	
Y	9	STREET LIGHTING	BISHOPTHORPE ROAD	CLEETHORPES	530602.34	407289	1988		44190	Urbis	Axia 16 LED 350mA	19 Watts	5.00 Metres	Galvanised Steel	
Y	10	STREET LIGHTING	BISHOPTHORPE ROAD	CLEETHORPES	530581.2	407276.53	1988		44191	Urbis	Axia 16 LED 350mA	19 Watts	5.00 Metres	Galvanised Steel	
Y	1	STREET LIGHTING	BOLINGBROKE ROAD	CLEETHORPES	531433.8	407441.38	2006		44364	1 Urbis LED	Axia 16 LED 500mA	28 Watts	6.00 Metres	Stainless Steel	
Y	2	STREET LIGHTING	BOLINGBROKE ROAD	CLEETHORPES	531441.64	407408.35	2010		44365	1 Urbis LED	Axia 16 LED 500mA	28 Watts	6.00 Metres	Steel	
Y	3	STREET LIGHTING	BOLINGBROKE ROAD	CLEETHORPES	531466.09	407388.56	2010		44366	1 Urbis LED	Axia 16 LED 500mA	28 Watts	6.00 Metres	Steel	
Y	4	STREET LIGHTING	BOLINGBROKE ROAD	CLEETHORPES	531481.75	407364.93	2010		44367	1 Urbis LED	Axia 16 LED 500mA	28 Watts	6.00 Metres	Steel	
Y	5	STREET LIGHTING	BOLINGBROKE ROAD	CLEETHORPES	531488.89	407334.49	2010		44368	1 Urbis LED	Axia 16 LED 500mA	28 Watts	6.00 Metres	Steel	
Y	6	STREET LIGHTING	BOLINGBROKE ROAD	CLEETHORPES	531515.84	407315.39	2010		44369	1 Urbis LED	Axia 16 LED 500mA	28 Watts	6.00 Metres	Steel	
Y	7	STREET LIGHTING	BOLINGBROKE ROAD	CLEETHORPES	531526.37	407280.15	2010		44370	1 Urbis LED	Axia 16 LED 500mA	28 Watts	6.00 Metres	Steel	
Y	8	STREET LIGHTING	BOLINGBROKE ROAD	CLEETHORPES	531552.72	407260.36	2010		44371	1 Urbis LED	Axia 16 LED 500mA	28 Watts	6.00 Metres	Steel	
Y	9	STREET LIGHTING	BOLINGBROKE ROAD	CLEETHORPES	531562.49	407226.96	2010		44372	1 Urbis LED	Axia 16 LED 500mA	28 Watts	6.00 Metres	Steel	
Y	10	STREET LIGHTING	BOLINGBROKE ROAD	CLEETHORPES	531589.21	407205.33	2010		44373	1 Urbis LED	Axia 16 LED 500mA	28 Watts	6.00 Metres	Steel	
Y	11	STREET LIGHTING	BOLINGBROKE ROAD	CLEETHORPES	531595.84	407174.77	2010		44374	1 Urbis LED	Axia 16 LED 500mA	28 Watts	6.00 Metres	Steel	
Y	12	STREET LIGHTING	BOLINGBROKE ROAD	CLEETHORPES	531621.91	407154.59	2010		44375	1 Urbis LED	Axia 16 LED 500mA	28 Watts	6.00 Metres	Steel	
Y	13	STREET LIGHTING	BOLINGBROKE ROAD	CLEETHORPES	531627.29	407126.58	2010		44376	1 Urbis LED	Axia 16 LED 500mA	28 Watts	6.00 Metres	Steel	
Y	14	STREET LIGHTING	BOLINGBROKE ROAD	CLEETHORPES	531654.47	407107.5	2010		44377	1 Urbis LED	Axia 16 LED 500mA	28 Watts	6.00 Metres	Steel	
Y	15	STREET LIGHTING	BOLINGBROKE ROAD	CLEETHORPES	531676.24	407082.92	2010		44378	1 Urbis LED	Axia 16 LED 500mA	28 Watts	6.00 Metres	Steel	
Y	16	STREET LIGHTING	BOLINGBROKE ROAD	CLEETHORPES	531711.62	407076.93	2010		44379	1 Urbis LED	Axia 16 LED 500mA	28 Watts	6.00 Metres	Steel	
Y	1	STREET LIGHTING	BURLEY AVENUE	CLEETHORPES	530644.62	407287.99	1988		44941	Urbis	Axia 16 LED 350mA	19 Watts	5.00 Metres	Galvanised Steel	
Y	2	STREET LIGHTING	BURLEY AVENUE	CLEETHORPES	530645.13	407266.28	1988		44942	Urbis	Axia 16 LED 350mA	19 Watts	5.00 Metres	Galvanised Steel	
Y	3	STREET LIGHTING	BURLEY AVENUE	CLEETHORPES	530654.5	407237.93	1988		44943	Urbis	Axia 16 LED 350mA	19 Watts	5.00 Metres	Galvanised Steel	
Y	4	STREET LIGHTING	BURLEY AVENUE	CLEETHORPES	530633.36	407223.94	1988		44944	Urbis	Axia 16 LED 350mA	19 Watts	5.00 Metres	Galvanised Steel	

Y	1	STREET LIGHTING	BUTTERWICK CLOSE	CLEETHORPES	530896.96	407296.78	1986		45031	Urbis	Axia 16 LED 350mA	19 Watts	5.00 Metres	Galvanised Steel	
Y	2	STREET LIGHTING	BUTTERWICK CLOSE	CLEETHORPES	530871.9	407306.72	2014		45032	Urbis	Axia 16 LED 350mA	19 Watts	6.00 Metres	Galvanised Steel	
Y	3	STREET LIGHTING	BUTTERWICK CLOSE	CLEETHORPES	530862.66	407326.78	1986		45033	Urbis	Axia 16 LED 350mA	19 Watts	5.00 Metres	Galvanised Steel	
Y	4	STREET LIGHTING	BUTTERWICK CLOSE	CLEETHORPES	530838.86	407337.23	1986		45034	Urbis	Axia 16 LED 350mA	19 Watts	5.00 Metres	Galvanised Steel	
Y	5	STREET LIGHTING	BUTTERWICK CLOSE	CLEETHORPES	530819.62	407351.47	1986		45035	Urbis	Axia 16 LED 350mA	19 Watts	5.00 Metres	Galvanised Steel	
Y	1	STREET LIGHTING	CAENBY ROAD	CLEETHORPES	530477.25	407508.98	2014		45067	Urbis	Axia 16 LED 350mA	19 Watts	6.00 Metres	Galvanised Steel	
Y	2	STREET LIGHTING	CAENBY ROAD	CLEETHORPES	530493.33	407484.99	2014		45068	Urbis	Axia 16 LED 350mA	19 Watts	6.00 Metres	Galvanised Steel	
Y	3	STREET LIGHTING	CAENBY ROAD	CLEETHORPES	530512.7	407467.21	2014		45069	Urbis	Axia 16 LED 350mA	19 Watts	6.00 Metres	Galvanised Steel	
Y	4	STREET LIGHTING	CAENBY ROAD	CLEETHORPES	530533.71	407454.86	2014		45070	Urbis	Axia 16 LED 350mA	19 Watts	6.00 Metres	Galvanised Steel	
Y	1	STREET LIGHTING	ESKHAM CLOSE	CLEETHORPES	530663.03	407273.67	1988		48073	Urbis	Axia 16 LED 350mA	19 Watts	5.00 Metres	Galvanised Steel	
Y	2	STREET LIGHTING	ESKHAM CLOSE	CLEETHORPES	530686.45	407277.4	1988		48074	Urbis	Axia 16 LED 350mA	19 Watts	5.00 Metres	Galvanised Steel	
Y	1	STREET LIGHTING	FILLINGHAM CRESCENT	CLEETHORPES	530942.73	407391.51	1993		48554	Urbis	Axia 16 LED 350mA	19 Watts	6.00 Metres	Galvanised Steel	
Y	2	STREET LIGHTING	FILLINGHAM CRESCENT	CLEETHORPES	530950.32	407368.66	1993		48555	Urbis	Axia 16 LED 350mA	19 Watts	6.00 Metres	Galvanised Steel	
Y	3	STREET LIGHTING	FILLINGHAM CRESCENT	CLEETHORPES	530931.21	407344.04	1993		48556	Urbis	Axia 16 LED 350mA	19 Watts	6.00 Metres	Galvanised Steel	
Y	4	STREET LIGHTING	FILLINGHAM CRESCENT	CLEETHORPES	530932.94	407320.45	1993		48557	Urbis	Axia 16 LED 350mA	19 Watts	6.00 Metres	Galvanised Steel	
Y	5	STREET LIGHTING	FILLINGHAM CRESCENT	CLEETHORPES	530922.3	407292.03	1993		48558	Urbis	Axia 16 LED 350mA	19 Watts	6.00 Metres	Galvanised Steel	
Y	6	STREET LIGHTING	FILLINGHAM CRESCENT	CLEETHORPES	530913.19	407269.56	1993		48559	Urbis	Axia 16 LED 350mA	19 Watts	6.00 Metres	Galvanised Steel	
Y	7	STREET LIGHTING	FILLINGHAM CRESCENT	CLEETHORPES	530896.23	407249.76	1993		48560	Urbis	Axia 16 LED 350mA	19 Watts	6.00 Metres	Galvanised Steel	
Y	8	STREET LIGHTING	FILLINGHAM CRESCENT	CLEETHORPES	530899.39	407226.69	1993		48561	Urbis	Axia 16 LED 350mA	19 Watts	6.00 Metres	Galvanised Steel	
Y	9	STREET LIGHTING	FILLINGHAM CRESCENT	CLEETHORPES	530917.74	407202.33	1993		48562	Urbis	Axia 16 LED 350mA	19 Watts	6.00 Metres	Galvanised Steel	
Y	10	STREET LIGHTING	FILLINGHAM CRESCENT	CLEETHORPES	530939.01	407193.21	1993		48563	Urbis	Axia 16 LED 350mA	19 Watts	6.00 Metres	Galvanised Steel	
Y	11	STREET LIGHTING	FILLINGHAM CRESCENT	CLEETHORPES	530957.36	407193.78	1993		48564	Urbis	Axia 16 LED 350mA	19 Watts	6.00 Metres	Galvanised Steel	
Y	12	STREET LIGHTING	FILLINGHAM CRESCENT	CLEETHORPES	530981.26	407215.49	1993		48565	Urbis	Axia 16 LED 350mA	19 Watts	6.00 Metres	Galvanised Steel	
Y	13	STREET LIGHTING	FILLINGHAM CRESCENT	CLEETHORPES	531010.38	407220.11	1993		48566	Urbis	Axia 16 LED 350mA	19 Watts	6.00 Metres	Galvanised Steel	
Y	14	STREET LIGHTING	FILLINGHAM CRESCENT	CLEETHORPES	531032.78	407232.08	1993		48567	Urbis	Axia 16 LED 350mA	19 Watts	6.00 Metres	Galvanised Steel	
Y	15	STREET LIGHTING	FILLINGHAM CRESCENT	CLEETHORPES	531049.74	407254.04	1993		48568	Urbis	Axia 16 LED 350mA	19 Watts	6.00 Metres	Galvanised Steel	
Y	16	STREET LIGHTING	FILLINGHAM CRESCENT	CLEETHORPES	531076.35	407253.63	1993		48569	Urbis	Axia 16 LED 350mA	19 Watts	6.00 Metres	Galvanised Steel	
Y	17	STREET LIGHTING	FILLINGHAM CRESCENT	CLEETHORPES	531101.19	407255.5	1993		48570	Urbis	Axia 16 LED 350mA	19 Watts	6.00 Metres	Galvanised Steel	
Y	18	STREET LIGHTING	FILLINGHAM CRESCENT	CLEETHORPES	531128.15	407265.69	1993		48571	Urbis	Axia 16 LED 350mA	19 Watts	6.00 Metres	Galvanised Steel	
Y	19	STREET LIGHTING	FILLINGHAM CRESCENT	CLEETHORPES	531150.93	407253.6	1993		48572	Urbis	Axia 16 LED 350mA	19 Watts	6.00 Metres	Galvanised Steel	
Y	1	STREET LIGHTING	GAYTON ROAD	CLEETHORPES	531420.73	407342.26	1995		49127	1 Urbis LED	Axia 16 LED 500mA	28 Watts	6.00 Metres	Galvanised Steel	
Y	2	STREET LIGHTING	GAYTON ROAD	CLEETHORPES	531420.23	407316.63	1995		49128	1 Urbis LED	Axia 16 LED 500mA	28 Watts	6.00 Metres	Galvanised Steel	
Y	3	STREET LIGHTING	GAYTON ROAD	CLEETHORPES	531439.34	407299.73	1995		49129	1 Urbis LED	Axia 16 LED 500mA	28 Watts	6.00 Metres	Galvanised Steel	
Y	4	STREET LIGHTING	GAYTON ROAD	CLEETHORPES	531447.57	407280.05	1995		49130	1 Urbis LED	Axia 16 LED 500mA	28 Watts	6.00 Metres	Galvanised Steel	
Y	5	STREET LIGHTING	GAYTON ROAD	CLEETHORPES	531447.57	407254.03	1995		49131	1 Urbis LED	Axia 16 LED 500mA	28 Watts	6.00 Metres	Galvanised Steel	
Y	6	STREET LIGHTING	GAYTON ROAD	CLEETHORPES	531458.35	407233.91	1995		49132	1 Urbis LED	Axia 16 LED 500mA	28 Watts	6.00 Metres	Galvanised Steel	
Y	7	STREET LIGHTING	GAYTON ROAD	CLEETHORPES	531472.02	407214.92	1962	01/12/1995	49133	1 Urbis LED	Axia 16 LED 500mA	28 Watts	5.00 Metres	Galvanised Steel	
Y	8	STREET LIGHTING	GAYTON ROAD	CLEETHORPES	531497.84	407201.82	1995		49134	1 Urbis LED	Axia 16 LED 500mA	28 Watts	6.00 Metres	Galvanised Steel	
Y	9	STREET LIGHTING	GAYTON ROAD	CLEETHORPES	531508.98	407177.96	1995		49135	1 Urbis LED	Axia 16 LED 500mA	28 Watts	6.00 Metres	Galvanised Steel	
Y	10	STREET LIGHTING	GAYTON ROAD	CLEETHORPES	531537.71	407171.19	1995		49136	1 Urbis LED	Axia 16 LED 500mA	28 Watts	6.00 Metres	Galvanised Steel	
Y	11	STREET LIGHTING	GAYTON ROAD	CLEETHORPES	531557.33	407181.12	1995		49137	1 Urbis LED	Axia 16 LED 500mA	28 Watts	6.00 Metres	Galvanised Steel	
Y	12	STREET LIGHTING	GAYTON ROAD	CLEETHORPES	531574.04	407191.69	1995		49138	1 Urbis LED	Axia 16 LED 500mA	28 Watts	6.00 Metres	Galvanised Steel	
Y	1	STREET LIGHTING	LUDBOROUGH WAY	CLEETHORPES	530735.79	407294.41	1989		52984	Urbis	Axia 16 LED 350mA	19 Watts	5.00 Metres	Galvanised Steel	
Y	2	STREET LIGHTING	LUDBOROUGH WAY	CLEETHORPES	530755.54	407273.72	1989		52985	Urbis	Axia 16 LED 350mA	19 Watts	5.00 Metres	Galvanised Steel	
Y	3	STREET LIGHTING	LUDBOROUGH WAY	CLEETHORPES	530768.19	407246.38	1989		52986	Urbis	Axia 16 LED 350mA	19 Watts	5.00 Metres	Galvanised Steel	
Y	4	STREET LIGHTING	LUDBOROUGH WAY	CLEETHORPES	530784.78	407226.19	1989		52987	Urbis	Axia 16 LED 350mA	19 Watts	5.00 Metres	Galvanised Steel	
Y	1	STREET LIGHTING	MANLEY GARDENS	CLEETHORPES	530950.83	407340.24	2014		53180	Urbis	Axia 16 LED 350mA	19 Watts	6.00 Metres	Galvanised Steel	
Y	2	STREET LIGHTING	MANLEY GARDENS	CLEETHORPES	530976.91	407327.27	2014		53181	Urbis	Axia 16 LED 350mA	19 Watts	6.00 Metres	Galvanised Steel	
Y	3	STREET LIGHTING	MANLEY GARDENS	CLEETHORPES	530988.81	407301.01	2014		53182	Urbis	Axia 16 LED 350mA	19 Watts	6.00 Metres	Galvanised Steel	
Y	4	STREET LIGHTING	MANLEY GARDENS	CLEETHORPES	531015.72	407273.71	1998		53183	Urbis	Axia 16 LED 350mA	19 Watts	6.00 Metres	Galvanised Steel	
Y	5	STREET LIGHTING	MANLEY GARDENS	CLEETHORPES	531017.74	407248.65	1996		53184	Urbis	Axia 16 LED 350mA	19 Watts	6.00 Metres	Galvanised Steel	
Y	1	STREET LIGHTING	MARSHCHAPEL CLOSE	CLEETHORPES	530735.69	407268.35	1989		53400	Urbis	Axia 16 LED 350mA	19 Watts	5.00 Metres	Galvanised Steel	
Y	2	STREET LIGHTING	MARSHCHAPEL CLOSE	CLEETHORPES	530721.13	407255.44	1989		53401	Urbis	Axia 16 LED 350mA	19 Watts	5.00 Metres	Galvanised Steel	
Y	1	STREET LIGHTING	RAVENDALE ROAD	CLEETHORPES	531452.64	407372.81	2010		55915	1 Urbis LED	Axia 16 LED 500mA	28 Watts	6.00 Metres	Steel	
Y	2	STREET LIGHTING	RAVENDALE ROAD	CLEETHORPES	531421.32	407367.1	2010		55916	1 Urbis LED	Axia 16 LED 500mA	28 Watts	6.00 Metres	Steel	
Y	3	STREET LIGHTING	RAVENDALE ROAD	CLEETHORPES	531397.26	407343.81	2010		55917	1 Urbis LED	Axia 16 LED 500mA	28 Watts	6.00 Metres	Steel	
Y	4	STREET LIGHTING	RAVENDALE ROAD	CLEETHORPES	531355.86	407344.1	2010		55918	1 Urbis LED	Axia 16 LED 500mA	28 Watts	6.00 Metres	Steel	
Y	5	STREET LIGHTING	RAVENDALE ROAD	CLEETHORPES	531335.26	407321.94	2004		55919	1 Urbis LED	Axia 16 LED 500mA	28 Watts	6.00 Metres	Stainless Steel	
Y	1	STREET LIGHTING	WALTHAM GRANGE	CLEETHORPES	530739.97	407207.48	1989		59748	Urbis	Axia 16 LED 350mA	19 Watts	5.00 Metres	Galvanised Steel	
Y	2	STREET LIGHTING	WALTHAM GRANGE	CLEETHORPES	530721.36	407219.32	1989		59749	Urbis	Axia 16 LED 350mA	19 Watts	5.00 Metres	Galvanised Steel	
Y	1	STREET LIGHTING	WESLEY CRESCENT	CLEETHORPES	530500.42	407566	2014		60285	1 Urbis LED	Axia 16 LED 500mA	28 Watts	6.00 Metres	Galvanised Steel	
Y	2	STREET LIGHTING	WESLEY CRESCENT	CLEETHORPES	530475.61	407549.1	2014		60286	1 Urbis LED	Axia 16 LED 500mA	28 Watts	6.00 Metres	Galvanised Steel	
Y	3	STREET LIGHTING	WESLEY CRESCENT	CLEETHORPES	530453.45	407525.11	2014		60287	1 Urbis LED	Axia 16 LED 500mA	28 Watts	6.00 Metres	Galvanised Steel	
Y	4	STREET LIGHTING	WESLEY CRESCENT	CLEETHORPES	530425.35	407495.3	2014		60288	1 Urbis LED	Axia 16 LED 500mA	28 Watts	6.00 Metres	Galvanised Steel	
Y	5	STREET LIGHTING	WESLEY CRESCENT	CLEETHORPES	530413.58	407470.56	1963		60289	1 Urbis LED	Axia 16 LED 500mA	28 Watts	5.00 Metres	Galvanised Steel	
Y	6	STREET LIGHTING	WESLEY CRESCENT	CLEETHORPES	530433.58	407447.39	2014		60290	1 Urbis LED	Axia 16 LED 500mA	28 Watts	6.00 Metres	Galvanised Steel	
Y	7	STREET LIGHTING	WESLEY CRESCENT	CLEETHORPES	530453.33	407419.35	2014		60291	1 Urbis LED	Axia 16 LED 500mA	28 Watts	6.00 Metres	Galvanised Steel	
Y	8	STREET LIGHTING	WESLEY CRESCENT	CLEETHORPES	530480.79	407402.9	2014		60292	1 Urbis LED	Axia 16 LED 500mA	28 Watts	6.00 Metres	Galvanised Steel	
Y	9	STREET LIGHTING	WESLEY CRESCENT	CLEETHORPES	530500.54	407418.78	2014		60293	1 Urbis LED	Axia 16 LED 500mA	28 Watts	6.00 Metres	Galvanised Steel	
Y	10	STREET LIGHTING	WESLEY CRESCENT	CLEETHORPES	530519.91	407437.96	2014		60294	1 Urbis LED	Axia 16 LED 500mA	28 Watts	6.00 Metres	Galvanised Steel	
Y	1	STREET LIGHTING	WOODLAND WALK	CLEETHORPES	530188.43	406376.5	1995		61122	1 Urbis LED	Axia 16 LED 500mA	28 Watts	5.00 Metres	Galvanised Steel	
Y	2	STREET LIGHTING	WOODLAND WALK	CLEETHORPES	530206.03	406397.33	1995		61123	1 Urbis LED	Axia 16 LED 500mA	28 Watts	5.00 Metres	Galvanised Steel	
Y	1	STREET LIGHTING	BILLINGHAY COURT	CLEETHORPES	530519.98	407412.16	1989		44134	Urbis	Axia 16 LED 350mA	19 Watts	5.00 Metres	Galvanised Steel	
Y	2	STREET LIGHTING	BILLINGHAY COURT	CLEETHORPES	530548.33	407395.26	1989		44135	Urbis	Axia 16 LED 350mA	19 Watts	5.00 Metres	Galvanised Steel	
Y	3	STREET LIGHTING	BILLINGHAY COURT	CLEETHORPES	530560.36	407370.39	1989		44136	Urbis	Axia 16 LED 350mA	19 Watts	5.00 Metres	Galvanised Steel	
Y	4	STREET LIGHTING	BILLINGHAY COURT	CLEETHORPES	530575.42	407370.83	1989		44137	Urbis	Axia 16 LED 350mA	19 Watts	5.00 Metres	Galvanised Steel	
Y	5	STREET LIGHTING	BILLINGHAY COURT	CLEETHORPES	530603.26	407364.31	1989		44138	Urbis	Axia 16 LED 350mA	19 Watts	5.00 Metres	Galvanised Steel	
Y	6	STREET LIGHTING	BILLINGHAY COURT	CLEETHORPES	530566.43	407348.11	1989		44139	Urbis	Axia 16 LED 350mA	19 Watts	5.00 Metres	Galvanised Steel	
Y	7	STREET LIGHTING	BILLINGHAY COURT	CLEETHORPES	530543.39	407335.13	1989		44140	Urbis	Axia 16 LED 350mA	19 Watts	5.00 Metres	Galvanised Steel	
Y	1	STREET LIGHTING	BULLFINCH LANE	CLEETHORPES	530148.56	406392.38	1995		44926	Urbis	Axia 16 LED 350mA	19 Watts	5.00 Metres	Galvanised Steel	
Y	2	STREET LIGHTING	BULLFINCH LANE	CLEETHORPES	530174.38	406374.6	1995		44927	Urbis	Axia 16 LED 350mA	19 Watts	5.00 Metres	Galvanised Steel	
Y	3	STREET LIGHTING	BULLFINCH LANE	CLEETHORPES	530204.25	406365.8	1995		44928	Urbis	Axia 16 LED 350mA	19 Watts	5.00 Metres	Galvanised Steel	
Y	4	STREET LIGHTING	BULLFINCH LANE	CLEETHORPES	530228.18	406342.32	1995		44929	Urbis	Axia 16 LED 350mA	19 Watts	5.00 Metres	Galvanised Steel	
Y	1	STREET LIGHTING	CLIXBY CLOSE	CLEETHORPES	531243	407324	2001		46319	1 Urbis LED	Axia 16 LED 500mA	28 Watts	6.00 Metres	Steel	
Y	2	STREET LIGHTING	CLIXBY CLOSE	CLEETHORPES	531234.48	407295.25	2014	15/10/2014	46320	1 Urbis LED	Axia 16 LED 500mA	28 Watts	6.00 Metres	Galvanised Steel	
Y	3	STREET LIGHTING	CLIXBY CLOSE	CLEETHORPES	531245	407264	2001		46321	1 Urbis LED	Axia 16 LED 500mA	28 Watts	6.00 Metres	Steel	
Y	4	STREET LIGHTING	CLIXBY CLOSE	CLEETHORPES	531237.89	407233.8	2001		46322	1 Urbis LED	Axia 16 LED 500mA	28 Watts	6.00 Metres	Steel	
Y	5	STREET LIGHTING	CLIXBY CLOSE	CLEETHORPES	531265	407222	2001		46323	1 Urbis LED	Axia 16 LED 500mA	28 Watts	6.00 Metres	Steel	
Y	6	STREET LIGHTING	CLIXBY CLOSE	CLEETHORPES	531294.75	407230.61	2014	15/10/2014	46324	1 Urbis LED	Axia 16 LED 500mA	28 Watts	6.00 Metres	Galvanised Steel	
Y	7	STREET LIGHTING	CLIXBY CLOSE	CLEETHORPES	531312.47	407208.22	2014	15/10/2014	46325	1 Urbis LED	Axia 16 LED 500mA	28 Watts	6.00 Metres	Galvanised Steel	
Y	1	STREET LIGHTING	HUMBERSTON ROAD	CLEETHORPES	528949.62	408046.52	1990		51117	1 Urbis LED	Teceo 48 LED 700mA	104 Watts	10.00 Metres	Galvanised Steel	
Y	2	STREET LIGHTING	HUMBERSTON ROAD	CLEETHORPES	528991.42	408018.71	1990		51118	1 Urbis LED	Teceo 48 LED 700mA	104 Watts	10.00 Metres	Galvanised Steel	
Y	3	STREET LIGHTING	HUMBERSTON ROAD	CLEETHORPES	529007.23	407981.11	1990		51119	1 Urbis LED	Teceo 48 LED 500mA	79 Watts	10.00 Metres	Galvanised Steel	
Y	4	STREET LIGHTING	HUMBERSTON ROAD	CLEETHORPES	529031.57	407973.71	1990		51120	1 Urbis LED	Teceo 48 LED 500mA	79 Watts	10.00 Metres	Galvanised Steel	
Y	5	STREET LIGHTING	HUMBERSTON ROAD	CLEETHORPES	529038.38	407946.92	1993		51121	1 Urbis LED	Teceo 48 LED 500mA	79 Watts	10.00 Metres	Galvanised Steel	
Y	6	STREET LIGHTING	HUMBERSTON ROAD	CLEETHORPES	529071.15	407928.23	1993		51122	1 Urbis LED	Teceo 48 LED 700mA	104 Watts	10.00 Metres	Galvanised Steel	
Y	7	STREET LIGHTING	HUMBERSTON ROAD	CLEETHORPES	529096.19	407894.63	1990		51123	1 Urbis LED	Teceo 48 LED 700mA	104 Watts	10.00 Metres	Galvanised Steel	
Y	8	STREET LIGHTING	HUMBERSTON ROAD	CLEETHORPES	529113.68	407863.98	1990		51124	1 Urbis LED	Teceo 48 LED 700mA	104 Watts	10.00 Metres	Galvanised Steel	
Y	9	STREET LIGHTING	HUMBERSTON ROAD	CLEETHORPES	529118.29	407826.14	1990		51125	1 Urbis LED	Teceo 48 LED 700mA	104 Watts	10.00 Metres	Galvanised Steel	
Y	10	STREET LIGHTING	HUMBERSTON ROAD	CLEETHORPES	529142.59	407798.52	2008		51126	1 Urbis LED	Teceo 48 LED 700mA	104 Watts	10.00 Metres	Steel	
Y	11	STREET LIGHTING	HUMBERSTON ROAD	CLEETHORPES	529143.18	407774.88	2006		51127	1 Urbis LED	Teceo 48 LED 700mA	104 Watts	10.00 Metres	Stainless Steel	
Y	12	STREET LIGHTING	HUMBERSTON ROAD	CLEETHORPES	529164.87	407764.37	1993		51128	1 Urbis LED	Teceo 48 LED 500mA	79 Watts	10.00 Metres	Galvanised Steel	
Y	13	STREET LIGHTING	HUMBERSTON ROAD	CLEETHORPES	529176.29	407728.92	1990		51129	1 Urbis LED	Teceo 48 LED 500mA	79 Watts	10.00 Metres	Galvanised Steel	
Y	14	STREET LIGHTING	HUMBERSTON ROAD	CLEETHORPES	529209.24	407706.46	1990		51130	1 Urbis LED	Teceo 48 LED 700mA	104 Watts	10.00 Metres	Galvanised Steel	
Y	15	STREET LIGHTING	HUMBERSTON ROAD	CLEETHORPES	529227.1	407678.29	1993		51131	1 Urbis LED	Teceo 48 LED 700mA	104 Watts	10.00 Metres	Galvanised Steel	
Y	16	STREET LIGHTING	HUMBERSTON ROAD	CLEETHORPES	529246.62	407640.54	1993		51132	Urbis	AXIA 3.3 48 LED 540mA	78 Watts	10.00 Metres	Galvanised Steel	
Y	17	STREET LIGHTING	HUMBERSTON ROAD	CLEETHORPES	529268.53	407594.88	1990		51133	1 Urbis LED	Teceo 48 LED 700mA	104 Watts	10.00 Metres	Galvanised Steel	
Y	18	STREET LIGHTING	HUMBERSTON ROAD	CLEETHORPES	529287.5	407554.84	1990		51134	1 Urbis LED	Teceo 48 LED 700mA	104 Watts	10.00 Metres	Galvanised Steel	
Y	19	STREET LIGHTING	HUMBERSTON ROAD	CLEETHORPES	529304.25	407512.31	1990		51135	Urbis	AXIA 3.3 48 LED 540mA	78 Watts	10.00 Metres	Galvanised Steel	
Y	20	STREET LIGHTING	HUMBERSTON ROAD	CLEETHORPES	529318.61	407470.14	1993		51136	1 Urbis LED	Teceo 48 LED 700mA	104 Watts	10.00 Metres	Galvanised Steel	

Y	21	STREET LIGHTING	HUMBERSTON ROAD	CLEETHORPES	529329.66	407428.53	1990		51137	1 Urbis LED	Teceo 48 LED 700mA	104 Watts	10.00 Metres	Galvanised Steel	
Y	22	STREET LIGHTING	HUMBERSTON ROAD	CLEETHORPES	529338.5	407385.36	1990		51138	1 Urbis LED	Teceo 48 LED 700mA	104 Watts	10.00 Metres	Galvanised Steel	
Y	23	STREET LIGHTING	HUMBERSTON ROAD	CLEETHORPES	529325.24	407360.59	1993		51139	1 Urbis LED	Teceo 48 LED 700mA	104 Watts	10.00 Metres	Galvanised Steel	
Y	24	STREET LIGHTING	HUMBERSTON ROAD	CLEETHORPES	529342.73	407342.36	1990		51140	1 Urbis LED	Teceo 48 LED 700mA	104 Watts	10.00 Metres	Galvanised Steel	
Y	25	STREET LIGHTING	HUMBERSTON ROAD	CLEETHORPES	529331.32	407296.33	1990		51141	1 Urbis LED	Teceo 48 LED 700mA	104 Watts	10.00 Metres	Galvanised Steel	
Y	26	STREET LIGHTING	HUMBERSTON ROAD	CLEETHORPES	529348.44	407268.44	1990		51142	1 Urbis LED	Teceo 48 LED 700mA	104 Watts	10.00 Metres	Galvanised Steel	
Y	27	STREET LIGHTING	HUMBERSTON ROAD	CLEETHORPES	529337.03	407237.78	1990		51143	1 Urbis LED	Teceo 48 LED 700mA	104 Watts	10.00 Metres	Galvanised Steel	
Y	28	STREET LIGHTING	HUMBERSTON ROAD	CLEETHORPES	529339.42	407201.79	1993		51144	Urbis	Teceo 48 LED 700mA	104 Watts	10.00 Metres	Galvanised Steel	
Y	29	STREET LIGHTING	HUMBERSTON ROAD	CLEETHORPES	529358.57	407184.39	1990		51145	1 Urbis LED	Teceo 48 LED 700mA	104 Watts	10.00 Metres	Galvanised Steel	
Y	30	STREET LIGHTING	HUMBERSTON ROAD	CLEETHORPES	529349.36	407153.55	1990		51146	1 Urbis LED	Teceo 48 LED 700mA	104 Watts	10.00 Metres	Galvanised Steel	
Y	31	STREET LIGHTING	HUMBERSTON ROAD	CLEETHORPES	529361.52	407115.9	1990		51147	1 Urbis LED	Teceo 48 LED 700mA	104 Watts	10.00 Metres	Galvanised Steel	
Y	32	STREET LIGHTING	HUMBERSTON ROAD	CLEETHORPES	529373.3	407080.09	2007		51148	1 Urbis LED	Teceo 48 LED 700mA	104 Watts	12.00 Metres	Steel	
Y	33	STREET LIGHTING	HUMBERSTON ROAD	CLEETHORPES	529388.77	407041.88	1993		51149	1 Urbis LED	Teceo 48 LED 700mA	104 Watts	10.00 Metres	Galvanised Steel	
Y	34	STREET LIGHTING	HUMBERSTON ROAD	CLEETHORPES	529406.81	407003.58	1990		51150	1 Urbis LED	Teceo 48 LED 700mA	104 Watts	10.00 Metres	Galvanised Steel	
Y	35	STREET LIGHTING	HUMBERSTON ROAD	CLEETHORPES	529431.85	406961.51	1990		51151	1 Urbis LED	Teceo 48 LED 700mA	104 Watts	10.00 Metres	Galvanised Steel	
Y	36	STREET LIGHTING	HUMBERSTON ROAD	CLEETHORPES	529453.76	406926.81	1990		51152	1 Urbis LED	Teceo 48 LED 700mA	104 Watts	10.00 Metres	Galvanised Steel	
Y	37	STREET LIGHTING	HUMBERSTON ROAD	CLEETHORPES	529486.35	406903.05	1990		51153	1 Urbis LED	Teceo 48 LED 700mA	104 Watts	10.00 Metres	Galvanised Steel	
Y	38	STREET LIGHTING	HUMBERSTON ROAD	CLEETHORPES	529496.48	406861.35	2003		51154	1 Urbis LED	Teceo 48 LED 700mA	104 Watts	10.00 Metres	Stainless Steel	
Y	39	STREET LIGHTING	HUMBERSTON ROAD	CLEETHORPES	529530.38	406840.23	2010		51155	1 Urbis LED	Teceo 48 LED 700mA	104 Watts	12.00 Metres	Steel	
Y	40	STREET LIGHTING	HUMBERSTON ROAD	CLEETHORPES	529550.9	406805.58	2010		51156	1 Urbis LED	Teceo 48 LED 700mA	104 Watts	12.00 Metres	Steel	
Y	1	STREET LIGHTING	LINKS ROAD	CLEETHORPES	531171.96	407393.27	2023	03/08/2023	69297	Urbis	Axia 24 LED 500mA	28 Watts	8.00 Metres	Galvanised Steel	
Y	2	STREET LIGHTING	LINKS ROAD	CLEETHORPES	531172.38	407369.2	2023	03/08/2023	69770	Urbis	Axia 24 LED 500mA	28 Watts	8.00 Metres	Galvanised Steel	
Y	3	STREET LIGHTING	LINKS ROAD	CLEETHORPES	531160.1	407340.22	2023	03/08/2023	69771	Urbis	Axia 24 LED 500mA	28 Watts	8.00 Metres	Galvanised Steel	
Y	4	STREET LIGHTING	LINKS ROAD	CLEETHORPES	531160.46	407311.77	2023	03/08/2023	69772	Urbis	AXIA 16 LED 480mA	26 Watts	8.00 Metres	Galvanised Steel	
Y	5	STREET LIGHTING	LINKS ROAD	CLEETHORPES	531160.91	407284.51	2023	03/08/2023	69773	Urbis	Axia 24 LED 500mA	28 Watts	8.00 Metres	Galvanised Steel	
Y	6	STREET LIGHTING	LINKS ROAD	CLEETHORPES	531174.02	407258.85	2023	03/08/2023	69774	Urbis	Axia 24 LED 500mA	28 Watts	8.00 Metres	Galvanised Steel	
Y	7	STREET LIGHTING	LINKS ROAD	CLEETHORPES	531161.66	407233.63	2023	03/08/2023	69775	Urbis	Axia 24 LED 500mA	28 Watts	8.00 Metres	Galvanised Steel	
Y	8	STREET LIGHTING	LINKS ROAD	CLEETHORPES	531159.37	407208.32	2023	03/08/2023	69776	Urbis	Axia 24 LED 500mA	28 Watts	8.00 Metres	Galvanised Steel	
Y	9	STREET LIGHTING	LINKS ROAD	CLEETHORPES	531153.56	407177.71	2023	03/08/2023	69777	Urbis	Axia 24 LED 500mA	28 Watts	8.00 Metres	Galvanised Steel	
Y	10	STREET LIGHTING	LINKS ROAD	CLEETHORPES	531146.61	407148.33	2023	03/08/2023	69778	Urbis	Axia 24 LED 500mA	28 Watts	8.00 Metres	Galvanised Steel	
Y	11	STREET LIGHTING	LINKS ROAD	CLEETHORPES	531139.92	407117.1	1992	01/04/1992	52611	1 Urbis LED	Teceo 16 LED 500mA	28 Watts	8.00 Metres	Galvanised Steel	
Y	12	STREET LIGHTING	LINKS ROAD	CLEETHORPES	531148.46	407107.16	2009	21/04/2009	52612	Urbis	Axia 16 LED 350mA	19 Watts	6.00 Metres	Galvanised Steel	
Y	1	STREET LIGHTING	LOVEDEN COURT	CLEETHORPES	531002.22	407314.61			52934	Urbis	Axia 16 LED 350mA	19 Watts	6.00 Metres	Galvanised Steel	
Y	2	STREET LIGHTING	LOVEDEN COURT	CLEETHORPES	531030.07	407320.12	2014		52935	Urbis	Axia 16 LED 350mA	19 Watts	6.00 Metres	Galvanised Steel	
Y	3	STREET LIGHTING	LOVEDEN COURT	CLEETHORPES	531056.65	407338.35	2014		52936	Urbis	Axia 16 LED 350mA	19 Watts	6.00 Metres	Galvanised Steel	
Y	4	STREET LIGHTING	LOVEDEN COURT	CLEETHORPES	531082.6	407349.68	2014		52937	Urbis	Axia 16 LED 350mA	19 Watts	6.00 Metres	Galvanised Steel	
Y	5	STREET LIGHTING	LOVEDEN COURT	CLEETHORPES	531081.34	407324.3	2014		52938	Urbis	Axia 16 LED 350mA	19 Watts	6.00 Metres	Galvanised Steel	
Y	1	STREET LIGHTING	RESTON COURT	CLEETHORPES	530993.03	407201	2014		56016	1 Urbis LED	Axia 16 LED 500mA	28 Watts	6.00 Metres	Galvanised Steel	
Y	2	STREET LIGHTING	RESTON COURT	CLEETHORPES	531006.27	407174.67	2014		56017	1 Urbis LED	Axia 16 LED 500mA	28 Watts	6.00 Metres	Galvanised Steel	
Y	3	STREET LIGHTING	RESTON COURT	CLEETHORPES	531043	407179	2001		56018	1 Urbis LED	Axia 16 LED 500mA	28 Watts	6.00 Metres	Galvanised Steel	
Y	4	STREET LIGHTING	RESTON COURT	CLEETHORPES	531065.13	407166.69	2014		56019	1 Urbis LED	Axia 16 LED 500mA	28 Watts	6.00 Metres	Galvanised Steel	
Y	5	STREET LIGHTING	RESTON COURT	CLEETHORPES	531092.47	407171.19	2014		56020	1 Urbis LED	Axia 16 LED 500mA	28 Watts	6.00 Metres	Galvanised Steel	
Y	6	STREET LIGHTING	RESTON COURT	CLEETHORPES	531126.14	407173.5	2005		56021	1 Urbis LED	Axia 16 LED 500mA	28 Watts	6.00 Metres	Stainless Steel	
Y	7	STREET LIGHTING	RESTON COURT	CLEETHORPES	531121.58	407152.01	2014		56022	1 Urbis LED	Axia 16 LED 500mA	28 Watts	6.00 Metres	Galvanised Steel	
Y	1	STREET LIGHTING	ROSEMARY WAY	CLEETHORPES	530101.15	406306.37	1995		56288	1 Urbis LED	Teceo 40 LED 500mA	64 Watts	10.00 Metres	Stainless Steel	
Y	2	STREET LIGHTING	ROSEMARY WAY	CLEETHORPES	530124.55	406329.42	1995		56289	Urbis	Axia 16 LED 350mA	19 Watts	5.00 Metres	Galvanised Steel	
Y	3	STREET LIGHTING	ROSEMARY WAY	CLEETHORPES	530128.02	406360.88	1995		56290	Urbis	Axia 16 LED 350mA	19 Watts	5.00 Metres	Galvanised Steel	
Y	4	STREET LIGHTING	ROSEMARY WAY	CLEETHORPES	530131.69	406390.19	1995		56291	Urbis	Axia 16 LED 350mA	19 Watts	5.00 Metres	Galvanised Steel	
Y	5	STREET LIGHTING	ROSEMARY WAY	CLEETHORPES	530143.21	406422.38	1995		56292	Urbis	Axia 16 LED 350mA	19 Watts	5.00 Metres	Galvanised Steel	
Y	6	STREET LIGHTING	ROSEMARY WAY	CLEETHORPES	530146.65	406453.87	1995		56293	Urbis	Axia 16 LED 350mA	19 Watts	5.00 Metres	Galvanised Steel	
Y	7	STREET LIGHTING	ROSEMARY WAY	CLEETHORPES	530169.74	406473.01	1995		56294	Urbis	Axia 16 LED 350mA	19 Watts	5.00 Metres	Galvanised Steel	
Y	8	STREET LIGHTING	ROSEMARY WAY	CLEETHORPES	530187.03	406497.5	1995		56295	Urbis	Axia 16 LED 350mA	19 Watts	5.00 Metres	Galvanised Steel	
Y	9	STREET LIGHTING	ROSEMARY WAY	CLEETHORPES	530215.34	406505.16	1995		56296	Urbis	Axia 16 LED 350mA	19 Watts	5.00 Metres	Galvanised Steel	
Y	10	STREET LIGHTING	ROSEMARY WAY	CLEETHORPES	530231.29	406535.41	1995		56297	Urbis	Axia 16 LED 350mA	19 Watts	5.00 Metres	Galvanised Steel	
Y	11	STREET LIGHTING	ROSEMARY WAY	CLEETHORPES	530246.99	406532.07	2022	04/01/2022	68806	Urbis	Axia 16 LED 350mA	19 Watts	6.00 Metres	Galvanised Steel	
Y	12	STREET LIGHTING	ROSEMARY WAY	CLEETHORPES	530276.38	406528.54	1995		56299	Urbis	Axia 16 LED 350mA	19 Watts	5.00 Metres	Galvanised Steel	
Y	13	STREET LIGHTING	ROSEMARY WAY	CLEETHORPES	530302.66	406533.67	1995		56300	Urbis	Axia 16 LED 350mA	19 Watts	5.00 Metres	Galvanised Steel	
Y	14	STREET LIGHTING	ROSEMARY WAY	CLEETHORPES	530332.88	406533.6	1995		56301	Urbis	Axia 16 LED 350mA	19 Watts	5.00 Metres	Galvanised Steel	
Y	15	STREET LIGHTING	ROSEMARY WAY	CLEETHORPES	530363.31	406529.3	1995		56302	Urbis	Axia 16 LED 350mA	19 Watts	5.00 Metres	Galvanised Steel	
Y	16	STREET LIGHTING	ROSEMARY WAY	CLEETHORPES	530387.11	406516.45	1995		56303	Urbis	Axia 16 LED 350mA	19 Watts	5.00 Metres	Galvanised Steel	
Y	17	STREET LIGHTING	ROSEMARY WAY	CLEETHORPES	530401.95	406522.53	2020	19/11/2020	68190	Urbis	Axia 16 LED 350mA	19 Watts	6.00 Metres	Galvanised Steel	
Y	1	STREET LIGHTING	SCRIVELSBY COURT	CLEETHORPES	531412.42	407126.2	2010	26/07/2010	56776	1 Urbis LED	Axia 16 LED 500mA	28 Watts	6.00 Metres	Steel	
Y	2	STREET LIGHTING	SCRIVELSBY COURT	CLEETHORPES	531414.17	407150.74	2010	26/07/2010	56777	1 Urbis LED	Axia 16 LED 500mA	28 Watts	6.00 Metres	Steel	
Y	3	STREET LIGHTING	SCRIVELSBY COURT	CLEETHORPES	531392.58	407137.57	2010	26/07/2010	56778	1 Urbis LED	Axia 16 LED 500mA	28 Watts	6.00 Metres	Steel	
Y	4	STREET LIGHTING	SCRIVELSBY COURT	CLEETHORPES	531357.85	407127.91	2010	26/07/2010	56779	1 Urbis LED	Axia 16 LED 500mA	28 Watts	6.00 Metres	Steel	
Y	5	STREET LIGHTING	SCRIVELSBY COURT	CLEETHORPES	531327.89	407130.82	2010	26/07/2010	56780	1 Urbis LED	Axia 16 LED 500mA	28 Watts	6.00 Metres	Steel	
Y	6	STREET LIGHTING	SCRIVELSBY COURT	CLEETHORPES	531306.67	407144.42	2010	26/07/2010	56781	1 Urbis LED	Axia 16 LED 500mA	28 Watts	6.00 Metres	Steel	
Y	7	STREET LIGHTING	SCRIVELSBY COURT	CLEETHORPES	531275.32	407133.61	2010	26/07/2010	56782	1 Urbis LED	Axia 16 LED 500mA	28 Watts	6.00 Metres	Steel	
Y	8	STREET LIGHTING	SCRIVELSBY COURT	CLEETHORPES	531259.74	407157.55	2010	26/07/2010	56783	1 Urbis LED	Axia 16 LED 500mA	28 Watts	6.00 Metres	Steel	
Y	1	STREET LIGHTING	THORGANBY ROAD	CLEETHORPES	531181.82	407343.85	2010		59111	1 Urbis LED	Axia 16 LED 500mA	28 Watts	6.00 Metres	Steel	
Y	2	STREET LIGHTING	THORGANBY ROAD	CLEETHORPES	531209.91	407344.12	2010		59112	1 Urbis LED	Axia 16 LED 500mA	28 Watts	6.00 Metres	Steel	
Y	3	STREET LIGHTING	THORGANBY ROAD	CLEETHORPES	531239.14	407344.68	2010		59113	1 Urbis LED	Axia 16 LED 500mA	28 Watts	6.00 Metres	Steel	
Y	4	STREET LIGHTING	THORGANBY ROAD	CLEETHORPES	531270.27	407340.77	2010		59114	1 Urbis LED	Axia 16 LED 500mA	28 Watts	6.00 Metres	Steel	
Y	5	STREET LIGHTING	THORGANBY ROAD	CLEETHORPES	531293.04	407322.92	2010		59115	1 Urbis LED	Axia 16 LED 500mA	28 Watts	6.00 Metres	Steel	
Y	6	STREET LIGHTING	THORGANBY ROAD	CLEETHORPES	531318.14	407307.85	2010		59116	1 Urbis LED	Axia 16 LED 500mA	28 Watts	6.00 Metres	Steel	
Y	7	STREET LIGHTING	THORGANBY ROAD	CLEETHORPES	531350.61	407292.68	2010		59117	1 Urbis LED	Axia 16 LED 500mA	28 Watts	6.00 Metres	Steel	
Y	8	STREET LIGHTING	THORGANBY ROAD	CLEETHORPES	531368.35	407267.8	2010		59118	1 Urbis LED	Axia 16 LED 500mA	28 Watts	6.00 Metres	Steel	
Y	9	STREET LIGHTING	THORGANBY ROAD	CLEETHORPES	531374.94	407235.77	2010		59119	1 Urbis LED	Axia 16 LED 500mA	28 Watts	6.00 Metres	Steel	
Y	10	STREET LIGHTING	THORGANBY ROAD	CLEETHORPES	531401.27	407214.02	2010		59120	1 Urbis LED	Axia 16 LED 500mA	28 Watts	6.00 Metres	Steel	
Y	11	STREET LIGHTING	THORGANBY ROAD	CLEETHORPES	531406.96	407182.55	2010		59121	1 Urbis LED	Axia 16 LED 500mA	28 Watts	6.00 Metres	Steel	
Y	12	STREET LIGHTING	THORGANBY ROAD	CLEETHORPES	531432.51	407161.68	2010		59122	1 Urbis LED	Axia 16 LED 500mA	28 Watts	6.00 Metres	Steel	
Y	13	STREET LIGHTING	THORGANBY ROAD	CLEETHORPES	531448.81	407130.36	2010		59123	1 Urbis LED	Axia 16 LED 500mA	28 Watts	6.00 Metres	Steel	
Y	14	STREET LIGHTING	THORGANBY ROAD	CLEETHORPES	531450.58	407120.91	2010		59124	1 Urbis LED	Axia 16 LED 500mA	28 Watts	6.00 Metres	Steel	
Y	15	STREET LIGHTING	THORGANBY ROAD	CLEETHORPES	531482.14	407112.08	2010		59125	1 Urbis LED	Axia 16 LED 500mA	28 Watts	6.00 Metres	Steel	
Y	16	STREET LIGHTING	THORGANBY ROAD	CLEETHORPES	531513.81	407106.58	2010		59126	1 Urbis LED	Axia 16 LED 500mA	28 Watts	6.00 Metres	Steel	
Y	17	STREET LIGHTING	THORGANBY ROAD	CLEETHORPES	531547.86	407102.43	2010		59127	1 Urbis LED	Axia 16 LED 500mA	28 Watts	6.00 Metres	Steel	
Y	18	STREET LIGHTING	THORGANBY ROAD	CLEETHORPES	531574.13	407109.07	2010		59128	1 Urbis LED	Axia 16 LED 500mA	28 Watts	6.00 Metres	Steel	
Y	19	STREET LIGHTING	THORGANBY ROAD	CLEETHORPES	531601.44	407095.16	2010		59129	1 Urbis LED	Axia 16 LED 500mA	28 Watts	6.00 Metres	Steel	
Y	20	STREET LIGHTING	THORGANBY ROAD	CLEETHORPES	531631.03	407107.27	2010		59130	1 Urbis LED	Axia 16 LED 500mA	28 Watts	6.00 Metres	Steel	
Y	1	STREET LIGHTING	LINKS COURT	CLEETHORPES	531170.59	407170.98	1986		52599	Urbis	Axia 16 LED 350mA	19 Watts	5.00 Metres	Galvanised Steel	
Y	2	STREET LIGHTING	LINKS COURT	CLEETHORPES	531185.02	407157.18	1988		52600	Urbis	Axia 16 LED 350mA	19 Watts	5.00 Metres	Galvanised Steel	
Y	1	STREET LIGHTING	BECKSIDE CLOSE	CLEETHORPES	530109.95	406335.24	1995		43873	Urbis	Axia 16 LED 350mA	19 Watts	5.00 Metres	Galvanised Steel	
Y	2	STREET LIGHTING	BECKSIDE CLOSE	CLEETHORPES	530085.14	406358.21	1995		43874	Urbis	Axia 16 LED 350mA	19 Watts	5.00 Metres	Galvanised Steel	
Y	3	STREET LIGHTING	BECKSIDE CLOSE	CLEETHORPES	530060.33	406376.63	1995		43875	Urbis	Axia 16 LED 350mA	19 Watts	5.00 Metres	Galvanised Steel	
Y	4	STREET LIGHTING	BECKSIDE CLOSE	CLEETHORPES	530044.5	406374.25	2022	04/01/2022	68800	Urbis	Axia 16 LED 350mA	19 Watts	6.00 Metres	Galvanised Steel	
Y	1	STREET LIGHTING	BECK WALK	CLEETHORPES	530220.46	406341.63	1995		43867	1 Urbis LED	Axia 16 LED 500mA	28 Watts	5.00 Metres	Galvanised Steel	
Y	2	STREET LIGHTING	BECK WALK	CLEETHORPES	530192.23	406313.84	1995		43868	1 Urbis LED	Axia 16 LED 500mA	28 Watts	5.00 Metres	Galvanised Steel	
Y	1	STREET LIGHTING	MARIGOLD WALK	CLEETHORPES	530225.77	406363.27	1995		53301	1 Urbis LED	Axia 16 LED 500mA	28 Watts	5.00 Metres	Galvanised Steel	
Y	2	STREET LIGHTING	MARIGOLD WALK	CLEETHORPES	530241.98	406379.54	1995		53302	1 Urbis LED	Axia 16 LED 500mA	28 Watts	5.00 Metres	Galvanised Steel	
Y	3	STREET LIGHTING	MARIGOLD WALK	CLEETHORPES	530266.15	406355.17	1995		53303	1 Urbis LED	Axia 16 LED 500mA	28 Watts	5.00 Metres	Galvanised Steel	
Y	1	STREET LIGHTING	CHAFFINCH DRIVE	CLEETHORPES	530257.29	406448.77	1995		45564	Urbis	Axia 16 LED 350mA	19 Watts	5.00 Metres	Galvanised Steel	
Y	2	STREET LIGHTING	CHAFFINCH DRIVE	CLEETHORPES	530285.01	406466.94	1995		45565	Urbis	Axia 16 LED 350mA	19 Watts	5.00 Metres	Galvanised Steel	
Y	3	STREET LIGHTING	CHAFFINCH DRIVE	CLEETHORPES	530310.71	406480.54	1995		45566	Urbis	Axia 16 LED 350mA	19 Watts	5.00 Metres	Galvanised Steel	
Y	4	STREET LIGHTING	CHAFFINCH DRIVE	CLEETHORPES	530343.11	406461.62	1995		45567	Urbis	Axia 16 LED 350mA	19 Watts	5.00 Metres	Galvanised Steel	
Y	5	STREET LIGHTING	CHAFFINCH DRIVE	CLEETHORPES	530359.06	406455.48	1995		45568	Urbis	Axia 16 LED 350mA	19 Watts	5.00 Metres	Galvanised Steel	
Y	1	STREET LIGHTING	GREENFINCH DRIVE	CLEETHORPES	530199.72	406484.58	1995		49731	Urbis	Axia 16 LED 350mA	19 Watts	5.00 Metres	Galvanised Steel	
Y	2	STREET LIGHTING	GREENFINCH DRIVE	CLEETHORPES	530212	406455.41	1995		49732	Urbis	Axia 16 LED 350mA	19 Watts	5.00 Metres	Galvanised Steel	
Y	3	STREET LIGHTING	GREENFINCH DRIVE	CLEETHORPES	530236.05	406438.76	1995		49733	Urbis	Axia 16 LED 350mA	19 Watts	5.00 Metres	Galvanised Steel	
Y	4	STREET LIGHTING	GREENFINCH DRIVE	CLEETHORPES	530262.88	406430.79	1995		49734	Urbis	Axia 16 LED 350mA	19 Watts	5.00 Metres	Galvanised Steel	
Y	5	STREET LIGHTING	GREENFINCH DRIVE	CLEETHORPES	530293.77	406422.62	1995		49735	Urbis	Axia 16 LED 350mA	19 Watts	5.00 Metres	Galvanised Steel	

Y	6	STREET LIGHTING	GREENFINCH DRIVE	CLEETHORPES	530322.12	406412.69	1995		49736	Urbis	Axia 16 LED 350mA	19 Watts	5.00 Metres	Galvanised Steel	
Y	7	STREET LIGHTING	GREENFINCH DRIVE	CLEETHORPES	530331.74	406389.9	1995		49737	Urbis	Axia 16 LED 350mA	19 Watts	5.00 Metres	Galvanised Steel	
Y	8	STREET LIGHTING	GREENFINCH DRIVE	CLEETHORPES	530350.1	406372.37	1995		49738	Urbis	Axia 16 LED 350mA	19 Watts	5.00 Metres	Galvanised Steel	
Y	1	STREET LIGHTING	PRIMROSE WAY	CLEETHORPES	530350.98	406346.24	1995		55597	Urbis	Axia 16 LED 350mA	19 Watts	5.00 Metres	Galvanised Steel	
Y	2	STREET LIGHTING	PRIMROSE WAY	CLEETHORPES	530330.1	406344.4	1995		55598	Urbis	Axia 16 LED 350mA	19 Watts	5.00 Metres	Galvanised Steel	
Y	3	STREET LIGHTING	PRIMROSE WAY	CLEETHORPES	530311.75	406364.85	1995		55599	Urbis	Axia 16 LED 350mA	19 Watts	5.00 Metres	Galvanised Steel	
Y	4	STREET LIGHTING	PRIMROSE WAY	CLEETHORPES	530343.42	406320.13	2007		55600	Urbis	Axia 16 LED 350mA	19 Watts	6.00 Metres	Steel	
Y	5	STREET LIGHTING	PRIMROSE WAY	CLEETHORPES	530369.62	406306.39	1995		55601	Urbis	Axia 16 LED 350mA	19 Watts	5.00 Metres	Galvanised Steel	
Y	6	STREET LIGHTING	PRIMROSE WAY	CLEETHORPES	530395.7	406291.14	1995		55602	Urbis	Axia 16 LED 350mA	19 Watts	5.00 Metres	Galvanised Steel	
Y	7	STREET LIGHTING	PRIMROSE WAY	CLEETHORPES	530416.07	406268.17	1995		55603	Urbis	Axia 16 LED 350mA	19 Watts	5.00 Metres	Galvanised Steel	
Y	8	STREET LIGHTING	PRIMROSE WAY	CLEETHORPES	530443.42	406256.08	1998		55604	Urbis	Axia 16 LED 350mA	19 Watts	5.00 Metres	Galvanised Steel	
Y	9	STREET LIGHTING	PRIMROSE WAY	CLEETHORPES	530474	406269	1998		55605	Urbis	Axia 16 LED 350mA	19 Watts	5.00 Metres	Galvanised Steel	
Y	10	STREET LIGHTING	PRIMROSE WAY	CLEETHORPES	530493.12	406284.33	1998		55606	Urbis	Axia 16 LED 350mA	19 Watts	5.00 Metres	Galvanised Steel	
Y	11	STREET LIGHTING	PRIMROSE WAY	CLEETHORPES	530525.27	406285.16	1998		55607	Urbis	Axia 16 LED 350mA	19 Watts	5.00 Metres	Galvanised Steel	
Y	12	STREET LIGHTING	PRIMROSE WAY	CLEETHORPES	530548.18	406305.98	1998		55608	Urbis	Axia 16 LED 350mA	19 Watts	5.00 Metres	Galvanised Steel	
Y	13	STREET LIGHTING	PRIMROSE WAY	CLEETHORPES	530577.3	406301.99	1998		55609	Urbis	Axia 16 LED 350mA	19 Watts	5.00 Metres	Galvanised Steel	
Y	1	STREET LIGHTING	BENJAMINS WALK	CLEETHORPES	530253.8	406226.4	2008		44044	Urbis	Axia 16 LED 350mA	19 Watts	6.00 Metres	Steel	
Y	2	STREET LIGHTING	BENJAMINS WALK	CLEETHORPES	530266.8	406244.8	2008		44045	Urbis	Axia 16 LED 350mA	19 Watts	6.00 Metres	Steel	
Y	3	STREET LIGHTING	BENJAMINS WALK	CLEETHORPES	530278.6	406261	2008		44046	Urbis	Axia 16 LED 350mA	19 Watts	6.00 Metres	Steel	
Y	4	STREET LIGHTING	BENJAMINS WALK	CLEETHORPES	530295.3	406282.7	2008		44047	Urbis	Axia 16 LED 350mA	19 Watts	6.00 Metres	Steel	
Y	5	STREET LIGHTING	BENJAMINS WALK	CLEETHORPES	530309.4	406300.5	2008		44048	Urbis	Axia 16 LED 350mA	19 Watts	6.00 Metres	Steel	
Y	1	STREET LIGHTING	HAMPTON CLOSE	CLEETHORPES	530575.15	406240.86	1998		50135	Urbis	Axia 16 LED 350mA	19 Watts	5.00 Metres	Galvanised Steel	
Y	2	STREET LIGHTING	HAMPTON CLOSE	CLEETHORPES	530547.81	406224.97	1998		50136	Urbis	Axia 16 LED 350mA	19 Watts	5.00 Metres	Galvanised Steel	
Y	1	STREET LIGHTING	HAREWOOD GROVE	CLEETHORPES	530527.43	406309.21	1999		50175	Urbis	Axia 16 LED 350mA	19 Watts	5.00 Metres	Galvanised Steel	
Y	2	STREET LIGHTING	HAREWOOD GROVE	CLEETHORPES	530527.31	406332.44	2019	01/03/2019	67330	Urbis	Axia 16 LED 350mA	19 Watts	6.00 Metres	Galvanised Steel	
Y	1	STREET LIGHTING	EPSOM PLACE	CLEETHORPES	530566.39	406409.59	2003		48050	Urbis	Axia 16 LED 350mA	19 Watts	5.00 Metres	Stainless Steel	
Y	2	STREET LIGHTING	EPSOM PLACE	CLEETHORPES	530526.72	406395.44	2004		48051	Urbis	Axia 16 LED 350mA	19 Watts	5.00 Metres	Stainless Steel	
Y	3	STREET LIGHTING	EPSOM PLACE	CLEETHORPES	530541.41	406408.33	2004		48052	Urbis	Axia 16 LED 350mA	19 Watts	5.00 Metres	Stainless Steel	
Y	1	STREET LIGHTING	HONEYSUCKLE COURT	CLEETHORPES	530412.66	406423.05	1995		50994	Urbis	Axia 16 LED 350mA	19 Watts	5.00 Metres	Galvanised Steel	
Y	2	STREET LIGHTING	HONEYSUCKLE COURT	CLEETHORPES	530398.48	406417.41	1995		50995	Urbis	Axia 16 LED 350mA	19 Watts	5.00 Metres	Galvanised Steel	
Y	3	STREET LIGHTING	HONEYSUCKLE COURT	CLEETHORPES	530381.39	406394.19	1995		50996	Urbis	Axia 16 LED 350mA	19 Watts	5.00 Metres	Galvanised Steel	
Y	4	STREET LIGHTING	HONEYSUCKLE COURT	CLEETHORPES	530367.94	406369.08	2010		50997	Urbis	Axia 16 LED 350mA	19 Watts	6.00 Metres	Steel	
Y	1	STREET LIGHTING	LAIRGATE PLACE	CLEETHORPES	530590.34	406169.47	1998		52165	Urbis	Axia 16 LED 350mA	19 Watts	5.00 Metres	Galvanised Steel	
Y	2	STREET LIGHTING	LAIRGATE PLACE	CLEETHORPES	530565.66	406165.1	1998		52166	Urbis	Axia 16 LED 350mA	19 Watts	5.00 Metres	Galvanised Steel	
Y	3	STREET LIGHTING	LAIRGATE PLACE	CLEETHORPES	530571.23	406140.61	1998		52167	Urbis	Axia 16 LED 350mA	19 Watts	5.00 Metres	Galvanised Steel	
Y	1	STREET LIGHTING	VIOLET CLOSE	CLEETHORPES	530416.2	406286.15	1998		59638	Urbis	Axia 16 LED 350mA	19 Watts	5.00 Metres	Galvanised Steel	
Y	2	STREET LIGHTING	VIOLET CLOSE	CLEETHORPES	530437.97	406308.23	1998		59639	Urbis	Axia 16 LED 350mA	19 Watts	5.00 Metres	Galvanised Steel	
Y	3	STREET LIGHTING	VIOLET CLOSE	CLEETHORPES	530417.72	406346.27	1998		59640	Urbis	Axia 16 LED 350mA	19 Watts	5.00 Metres	Galvanised Steel	
Y	4	STREET LIGHTING	VIOLET CLOSE	CLEETHORPES	530430	406333.17	1998		59641	Urbis	Axia 16 LED 350mA	19 Watts	5.00 Metres	Galvanised Steel	
Y	5	STREET LIGHTING	VIOLET CLOSE	CLEETHORPES	530448.64	406324.37	2023	14/02/2023	69196	Urbis	Axia 16 LED 350mA	19 Watts	6.00 Metres	Galvanised Steel	
Y	6	STREET LIGHTING	VIOLET CLOSE	CLEETHORPES	530469.62	406309.56	1998		59643	Urbis	Axia 16 LED 350mA	19 Watts	5.00 Metres	Galvanised Steel	
Y	1	STREET LIGHTING	BOUNDARY FARM COURT	GRIMSBY	526569.21	404983.67	2014	01/06/2014	68743	Urbis	Teceo 16 LED 500mA	25 Watts	6.00 Metres	Galvanised Steel	
Y	2	STREET LIGHTING	BOUNDARY FARM COURT	GRIMSBY	526592.62	404993.01	2014	01/06/2014	68744	Urbis	Teceo 16 LED 500mA	25 Watts	6.00 Metres	Galvanised Steel	
Y	3	STREET LIGHTING	BOUNDARY FARM COURT	GRIMSBY	526598.32	405017.53	2014	01/06/2014	68745	Urbis	Teceo 16 LED 500mA	25 Watts	6.00 Metres	Galvanised Steel	
Y	4	STREET LIGHTING	BOUNDARY FARM COURT	GRIMSBY	526616.99	405033.04	2014	01/06/2014	68746	Urbis	Teceo 16 LED 500mA	25 Watts	6.00 Metres	Galvanised Steel	
Y	1	STREET LIGHTING	PINE WALK	CLEETHORPES	530614.37	408230.84	2014	10/02/2014	66563	1 Urbis LED	Teceo 24 LED 500mA	40 Watts	6.00 Metres	Steel	
Y	2	STREET LIGHTING	PINE WALK	CLEETHORPES	530632.09	408197.77	2014	10/02/2014	66564	1 Urbis LED	Teceo 24 LED 500mA	40 Watts	6.00 Metres	Steel	
Y	3	STREET LIGHTING	PINE WALK	CLEETHORPES	530642.04	408180.97	2014	10/02/2014	66565	1 Urbis LED	Teceo 24 LED 500mA	40 Watts	6.00 Metres	Steel	
Y	4	STREET LIGHTING	PINE WALK	CLEETHORPES	530652.78	408153.17	2014	10/02/2014	66566	1 Urbis LED	Teceo 24 LED 500mA	40 Watts	6.00 Metres	Steel	
Y	1	STREET LIGHTING	JOHN CORNWELL VC DRIVE	HUMBERSTON	528964.83	404535.82	2017	01/03/2017	69267	Urbis	AXIA 16 LED 390mA	21 Watts	6.00 Metres	Galvanised Steel	
Y	2	STREET LIGHTING	JOHN CORNWELL VC DRIVE	HUMBERSTON	528964.49	404536.65	2017	01/09/2017	69268	Urbis	AXIA 16 LED 390mA	21 Watts	6.00 Metres	Galvanised Steel	
Y	3	STREET LIGHTING	JOHN CORNWELL VC DRIVE	HUMBERSTON	528979.18	404502.59	2017	01/09/2017	69269	Urbis	AXIA 16 LED 390mA	21 Watts	6.00 Metres	Galvanised Steel	
Y	4	STREET LIGHTING	JOHN CORNWELL VC DRIVE	HUMBERSTON	528993.21	404470.87	2017	01/09/2017	69270	Urbis	AXIA 16 LED 390mA	21 Watts	6.00 Metres	Galvanised Steel	
Y	5	STREET LIGHTING	JOHN CORNWELL VC DRIVE	HUMBERSTON	529007.92	404437.76	2021	01/04/2021	69866	Urbis	Axia 16 LED 350mA	21 Watts	6.00 Metres	Galvanised Steel	
Y	6	STREET LIGHTING	JOHN CORNWELL VC DRIVE	HUMBERSTON	529016.57	404404.78	2021	01/04/2021	69867	Urbis	Axia 16 LED 350mA	21 Watts	6.00 Metres	Galvanised Steel	
Y	7	STREET LIGHTING	JOHN CORNWELL VC DRIVE	HUMBERSTON	529029.69	404365.33	2022	01/04/2022	69868	Urbis	Axia 16 LED 350mA	21 Watts	6.00 Metres	Galvanised Steel	
Y	1	STREET LIGHTING	THE ROWANS	HUMBERSTON	528984.73	404547.73	2017	01/09/2017	69271	Urbis	AXIA 16 LED 390mA	21 Watts	6.00 Metres	Galvanised Steel	
Y	2	STREET LIGHTING	THE ROWANS	HUMBERSTON	529023.36	404561.61	2017	01/09/2017	69272	Urbis	AXIA 16 LED 390mA	21 Watts	6.00 Metres	Galvanised Steel	
Y	3	STREET LIGHTING	THE ROWANS	HUMBERSTON	529056.95	404570.48	2017	01/09/2017	69273	Urbis	AXIA 16 LED 390mA	21 Watts	6.00 Metres	Galvanised Steel	
Y	4	STREET LIGHTING	THE ROWANS	HUMBERSTON	529089.09	404582.78	2017	01/09/2017	69274	Urbis	AXIA 16 LED 390mA	21 Watts	6.00 Metres	Galvanised Steel	
Y	5	STREET LIGHTING	THE ROWANS	HUMBERSTON	529125.33	404596.47	2017	01/09/2017	69275	Urbis	AXIA 16 LED 390mA	21 Watts	6.00 Metres	Galvanised Steel	
Y	6	STREET LIGHTING	THE ROWANS	HUMBERSTON	529134.19	404613.99	2017	01/09/2017	69276	Urbis	AXIA 16 LED 390mA	21 Watts	6.00 Metres	Galvanised Steel	
Y	7	STREET LIGHTING	THE ROWANS	HUMBERSTON	529158.21	404607.97	2017	01/09/2017	69277	Urbis	AXIA 16 LED 390mA	21 Watts	6.00 Metres	Galvanised Steel	
Y	1	STREET LIGHTING	THE BIRCHES	HUMBERSTON	529012.51	404495.68	2017	01/09/2017	69278	Urbis	AXIA 16 LED 390mA	21 Watts	6.00 Metres	Galvanised Steel	
Y	2	STREET LIGHTING	THE BIRCHES	HUMBERSTON	529045.31	404510.96	2017	01/09/2017	69279	Urbis	AXIA 16 LED 390mA	21 Watts	6.00 Metres	Galvanised Steel	
Y	3	STREET LIGHTING	THE BIRCHES	HUMBERSTON	529079.17	404524.38	2017	01/09/2017	69280	Urbis	AXIA 16 LED 390mA	21 Watts	6.00 Metres	Galvanised Steel	
Y	4	STREET LIGHTING	THE BIRCHES	HUMBERSTON	529114.49	404534.17	2017	01/09/2017	69281	Urbis	AXIA 16 LED 390mA	21 Watts	6.00 Metres	Galvanised Steel	
Y	5	STREET LIGHTING	THE BIRCHES	HUMBERSTON	529150.07	404544.62	2017	01/09/2017	69282	Urbis	AXIA 16 LED 390mA	21 Watts	6.00 Metres	Galvanised Steel	
Y	6	STREET LIGHTING	THE BIRCHES	HUMBERSTON	529181.74	404552.49	2017	01/09/2017	69283	Urbis	AXIA 16 LED 390mA	21 Watts	6.00 Metres	Galvanised Steel	
Y	7	STREET LIGHTING	THE BIRCHES	HUMBERSTON	529194.55	404573.84	2017	01/09/2017	69284	Urbis	AXIA 16 LED 390mA	21 Watts	6.00 Metres	Galvanised Steel	
Y	1	STREET LIGHTING	THE CHERRIES	HUMBERSTON	529031.09	404448.06	2018	01/09/2018	69285	Urbis	AXIA 16 LED 390mA	21 Watts	6.00 Metres	Galvanised Steel	
Y	2	STREET LIGHTING	THE CHERRIES	HUMBERSTON	529064.75	404460.03	2018	01/09/2018	69286	Urbis	AXIA 16 LED 390mA	21 Watts	6.00 Metres	Galvanised Steel	
Y	3	STREET LIGHTING	THE CHERRIES	HUMBERSTON	529098.42	404471.28	2018	01/09/2018	69287	Urbis	AXIA 16 LED 390mA	21 Watts	6.00 Metres	Galvanised Steel	
Y	4	STREET LIGHTING	THE CHERRIES	HUMBERSTON	529135.45	404484.37	2018	01/09/2018	69288	Urbis	AXIA 16 LED 390mA	21 Watts	6.00 Metres	Galvanised Steel	
Y	5	STREET LIGHTING	THE CHERRIES	HUMBERSTON	529169.91	404505.47	2018	01/09/2018	69289	Urbis	AXIA 16 LED 390mA	21 Watts	6.00 Metres	Galvanised Steel	
Y	6	STREET LIGHTING	THE CHERRIES	HUMBERSTON	529191.21	404524.65	2018	01/09/2018	69290	Urbis	AXIA 16 LED 390mA	21 Watts	6.00 Metres	Galvanised Steel	
Y	1	STREET LIGHTING	THE MAPLES	HUMBERSTON	529049.16	404398.32	2021	01/04/2021	69869	Urbis	Axia 16 LED 350mA	21 Watts	6.00 Metres	Galvanised Steel	
Y	2	STREET LIGHTING	THE MAPLES	HUMBERSTON	529087.93	404411.36	2021	01/04/2021	69870	Urbis	Axia 16 LED 350mA	21 Watts	6.00 Metres	Galvanised Steel	
Y	3	STREET LIGHTING	THE MAPLES	HUMBERSTON	529125.25	404422.84	2021	01/04/2021	69871	Urbis	Axia 16 LED 350mA	21 Watts	6.00 Metres	Galvanised Steel	
Y	4	STREET LIGHTING	THE MAPLES	HUMBERSTON	529157.53	404436.06	2021	01/04/2021	69872	Urbis	Axia 16 LED 350mA	21 Watts	6.00 Metres	Galvanised Steel	
Y	5	STREET LIGHTING	THE MAPLES	HUMBERSTON	529190.93	404451.14	2021	01/04/2021	69873	Urbis	Axia 16 LED 350mA	21 Watts	6.00 Metres	Galvanised Steel	
Y	6	STREET LIGHTING	THE MAPLES	HUMBERSTON	529186.1	404470.46	2021	01/04/2021	69874	Urbis	Axia 16 LED 350mA	21 Watts	6.00 Metres	Galvanised Steel	
Y	7	STREET LIGHTING	THE MAPLES	HUMBERSTON	529217.23	404465.36	2021	01/04/2021	69875	Urbis	Axia 16 LED 350mA	21 Watts	6.00 Metres	Galvanised Steel	
Y	1	STREET LIGHTING	THE BEECHES	HUMBERSTON	529041.88	404350.89	2024	06/03/2024	69846	Urbis	Axia 24 LED 500mA	28 Watts	6.00 Metres	Galvanised Steel	
Y	2	STREET LIGHTING	THE BEECHES	HUMBERSTON	529086.1	404359.2	2021	01/04/2021	69876	Urbis	Axia 16 LED 350mA	21 Watts	6.00 Metres	Galvanised Steel	
Y	3	STREET LIGHTING	THE BEECHES	HUMBERSTON	529116.66	404363.9	2021	01/04/2021	69877	Urbis	Axia 16 LED 350mA	21 Watts	6.00 Metres	Galvanised Steel	
Y	4	STREET LIGHTING	THE BEECHES	HUMBERSTON	529156.55	404366.73	2021	01/04/2021	69878	Urbis	Axia 16 LED 350mA	21 Watts	6.00 Metres	Galvanised Steel	
Y	5	STREET LIGHTING	THE BEECHES	HUMBERSTON	529197.52	404369.54	2021	01/04/2021	69879	Urbis	Axia 16 LED 350mA	21 Watts	6.00 Metres	Galvanised Steel	
Y	6	STREET LIGHTING	THE BEECHES	HUMBERSTON	529235.94	404372.14	2021	01/04/2021	69880	Urbis	Axia 16 LED 350mA	21 Watts	6.00 Metres	Galvanised Steel	
Y	7	STREET LIGHTING	THE BEECHES	HUMBERSTON	529235.97	404388.25	2021	01/04/2021	69881	Urbis	Axia 16 LED 350mA	21 Watts	6.00 Metres	Galvanised Steel	
Y	1	STREET LIGHTING	MULBERRY LANE	LACEBY	521426.46	407280.46	2015	30/11/2015	67033	Urbis	Axia 16 LED 500mA	28 Watts	6.00 Metres	Galvanised Steel	
Y	2	STREET LIGHTING	MULBERRY LANE	LACEBY	521443.99	407269.57	2015	30/11/2015	68572	Urbis	Axia 16 LED 500mA	28 Watts	6.00 Metres	Galvanised Steel	
Y	3	STREET LIGHTING	MULBERRY LANE	LACEBY	521471.75	407272.36	2015	30/11/2015	68573	Urbis	Axia 16 LED 500mA	28 Watts	6.00 Metres	Galvanised Steel	
Y	4	STREET LIGHTING	MULBERRY LANE	LACEBY	521502.96	407256.55	2015	30/11/2015	68574	Urbis	Axia 16 LED 500mA	28 Watts	6.00 Metres	Galvanised Steel	
Y	5	STREET LIGHTING	MULBERRY LANE	LACEBY	521526.61	407259.87	2015	30/11/2015	68575	Urbis	Axia 16 LED 500mA	28 Watts	6.00 Metres	Galvanised Steel	
Y	6	STREET LIGHTING	MULBERRY LANE	LACEBY	521562.99	407242.61	2015	30/11/2015	68576	Urbis	Teceo 24 LED 500mA	40 Watts	6.00 Metres	Galvanised Steel	
Y	1	STREET LIGHTING	WALNUT LANE	LACEBY	521447.57	407289.23	2015	30/11/2015	68583	Urbis	Axia 16 LED 500mA	28 Watts	6.00 Metres	Galvanised Steel	
Y	2	STREET LIGHTING	WALNUT LANE	LACEBY	521471.75	407305.31	2015	30/11/2015	68584	Urbis	Axia 16 LED 500mA	28 Watts	6.00 Metres	Galvanised Steel	
Y	3	STREET LIGHTING	WALNUT LANE	LACEBY	521499.64	407323.22	2015	30/11/2015	68585	Urbis	Axia 16 LED 500mA	28 Watts	6.00 Metres	Galvanised Steel	
Y	4	STREET LIGHTING	WALNUT LANE	LACEBY	521530.85	407314.46	2015	30/11/2015	68586	Urbis	Axia 16 LED 500mA	28 Watts	6.00 Metres	Galvanised Steel	
Y	5	STREET LIGHTING	WALNUT LANE	LACEBY	521562.99	407317.12	2015	30/11/2015	68587	Urbis	Axia 16 LED 500mA	28 Watts	6.00 Metres	Galvanised Steel	
Y	1	STREET LIGHTING	MAPLE WALK	LACEBY	521464.71	407244.87	2015	30/11/2015	68577	Urbis	Axia 16 LED 500mA	28 Watts	6.00 Metres	Galvanised Steel	
Y	2	STREET LIGHTING	MAPLE WALK	LACEBY	521460.99	407203.56	2015	30/11/2015	68578	Urbis	Axia 16 LED 500mA	28 Watts	6.00 Metres	Galvanised Steel	
Y	1	STREET LIGHTING	APPLE TREE LANE	LACEBY	521514.91	407240.62	2015	30/11/2015	68579	Urbis	Axia 16 LED 500mA	28 Watts	6.00 Metres	Galvanised Steel	
Y	2	STREET LIGHTING	APPLE TREE LANE	LACEBY	521517.03	407212.46	2015	30/11/2015	68580	Urbis	Axia 16 LED 500mA	28 Watts	6.00 Metres	Galvanised Steel	
Y	3	STREET LIGHTING	APPLE TREE LANE	LACEBY	521546.65	407197.19	2015	30/11/2015	68581	Urbis	Axia 16 LED 500mA	28 Watts	6.00 Metres	Galvanised Steel	
Y	4	STREET LIGHTING	APPLE TREE LANE	LACEBY	521582.11	407198.38	2015	30/11/2015	68582	Urbis	Axia 16 LED 500mA	28 Watts	6.00 Metres	Galvanised Steel	
Y	1	STREET LIGHTING	CORDEAUX DRIVE	GRIMSBY	526411.42	407480.12	2017	01/04/2017	68324	Urbis	Axia 16 LED 350mA	19 Watts	6.00 Metres	Galvanised Steel	
Y	2	STREET LIGHTING	CORDEAUX DRIVE	GRIMSBY	526398.43	407450.19	2017	01/04/2017	68762	Urbis	Axia 16 LED 350mA	19 Watts	6.00 Metres	Galvanised Steel	
Y	3	STREET LIGHTING	CORDEAUX DRIVE	GRIMSBY	526382.99	407427.41	2017	01/04/2017	68763	Urbis	Axia 16 LED 350mA	19 Watts	6.00 Metres	Galvanised Steel	

Y	4	STREET LIGHTING	CORDEAUX DRIVE	GRIMSBY	526365.48	407421.38	2017	01/04/2017	68764	Urbis	Axia 16 LED 350mA	19 Watts	6.00 Metres	Galvanised Steel	
Y	1	STREET LIGHTING	GERVASE HOLLES WAY	GRIMSBY	526346.84	407412.72	2015	01/06/2015	68323	Urbis	AXIA 16 LED 390mA	21 Watts	6.00 Metres	Galvanised Steel	
Y	2	STREET LIGHTING	GERVASE HOLLES WAY	GRIMSBY	526332.35	407426.84	2015	01/06/2015	68765	Urbis	AXIA 16 LED 390mA	21 Watts	6.00 Metres	Galvanised Steel	
Y	3	STREET LIGHTING	GERVASE HOLLES WAY	GRIMSBY	526307.87	407447.57	2015	01/06/2015	68766	Urbis	AXIA 16 LED 390mA	21 Watts	6.00 Metres	Galvanised Steel	
Y	4	STREET LIGHTING	GERVASE HOLLES WAY	GRIMSBY	526256.48	407448.68	2015	01/06/2015	68767	Urbis	AXIA 16 LED 390mA	21 Watts	6.00 Metres	Galvanised Steel	
Y	5	STREET LIGHTING	GERVASE HOLLES WAY	GRIMSBY	526284.72	407432.31	2015	01/06/2015	68768	Urbis	AXIA 16 LED 390mA	21 Watts	6.00 Metres	Galvanised Steel	
Y	6	STREET LIGHTING	GERVASE HOLLES WAY	GRIMSBY	526283.96	407395.02	2015	01/06/2015	68769	Urbis	AXIA 16 LED 390mA	21 Watts	6.00 Metres	Galvanised Steel	
Y	7	STREET LIGHTING	GERVASE HOLLES WAY	GRIMSBY	526301.11	407364.34	2015	01/06/2015	68770	Urbis	AXIA 16 LED 390mA	21 Watts	6.00 Metres	Galvanised Steel	
Y	8	STREET LIGHTING	GERVASE HOLLES WAY	GRIMSBY	526299.97	407334.97	2015	01/06/2015	68771	Urbis	AXIA 16 LED 390mA	21 Watts	6.00 Metres	Galvanised Steel	
Y	9	STREET LIGHTING	GERVASE HOLLES WAY	GRIMSBY	526325.01	407333.65	2015	01/06/2015	68772	Urbis	AXIA 16 LED 390mA	21 Watts	6.00 Metres	Galvanised Steel	
Y	10	STREET LIGHTING	GERVASE HOLLES WAY	GRIMSBY	526360.59	407325.55	2015	01/06/2015	68773	Urbis	AXIA 16 LED 390mA	21 Watts	6.00 Metres	Galvanised Steel	
Y	11	STREET LIGHTING	GERVASE HOLLES WAY	GRIMSBY	526388.45	407327.44	2015	01/06/2015	68774	Urbis	AXIA 16 LED 390mA	21 Watts	6.00 Metres	Galvanised Steel	
Y	12	STREET LIGHTING	GERVASE HOLLES WAY	GRIMSBY	526380.54	407357.94	2015	01/06/2015	68775	Urbis	AXIA 16 LED 390mA	21 Watts	6.00 Metres	Galvanised Steel	
Y	13	STREET LIGHTING	GERVASE HOLLES WAY	GRIMSBY	526375.27	407382.98	2015	01/06/2015	68776	Urbis	AXIA 16 LED 390mA	21 Watts	6.00 Metres	Galvanised Steel	
Y	14	STREET LIGHTING	GERVASE HOLLES WAY	GRIMSBY	526362.09	407396.34	2015	01/06/2015	68777	Urbis	AXIA 16 LED 390mA	21 Watts	6.00 Metres	Galvanised Steel	
Y	13	STREET LIGHTING	FOOTPATH CHURCH LANE TO LOVE	GRIMSBY	528726	408388	2001		51687	1 Urbis LED	Axia 16 LED 500mA	28 Watts	6.00 Metres	Galvanised Steel	
Y	14	STREET LIGHTING	FOOTPATH CHURCH LANE TO LOVE	GRIMSBY	528752.87	408336.35	2001		51688	1 Urbis LED	Axia 16 LED 500mA	28 Watts	6.00 Metres	Galvanised Steel	
Y	15	STREET LIGHTING	FOOTPATH CHURCH LANE TO LOVE	GRIMSBY	528780.76	408279.68	2001		51689	1 Urbis LED	Axia 16 LED 500mA	28 Watts	6.00 Metres	Galvanised Steel	
Y	16	STREET LIGHTING	FOOTPATH CHURCH LANE TO LOVE	GRIMSBY	528806.72	408226.65	2001		51690	1 Urbis LED	Axia 16 LED 500mA	28 Watts	6.00 Metres	Galvanised Steel	
Y	17	STREET LIGHTING	FOOTPATH CHURCH LANE TO LOVE	GRIMSBY	528852.57	408178.04	2001		51691	1 Urbis LED	Axia 16 LED 500mA	28 Watts	6.00 Metres	Galvanised Steel	
Y	18	STREET LIGHTING	FOOTPATH CHURCH LANE TO LOVE	GRIMSBY	528886	408136	2001		51692	1 Urbis LED	Axia 16 LED 500mA	28 Watts	6.00 Metres	Galvanised Steel	
Y	19	STREET LIGHTING	FOOTPATH CHURCH LANE TO LOVE	GRIMSBY	528754.69	408405.02	2001		51693	1 Urbis LED	Axia 16 LED 500mA	28 Watts	6.00 Metres	Galvanised Steel	
Y	20	STREET LIGHTING	FOOTPATH CHURCH LANE TO LOVE	GRIMSBY	528791	408421	2001		51694	1 Urbis LED	Axia 16 LED 500mA	28 Watts	6.00 Metres	Galvanised Steel	
Y	21	STREET LIGHTING	FOOTPATH CHURCH LANE TO LOVE	GRIMSBY	528837	408443	2001		51695	1 Urbis LED	Axia 16 LED 500mA	28 Watts	6.00 Metres	Galvanised Steel	
Y	22	STREET LIGHTING	FOOTPATH CHURCH LANE TO LOVE	GRIMSBY	528873	408440	2001		51696	1 Urbis LED	Axia 16 LED 500mA	28 Watts	6.00 Metres	Galvanised Steel	
Y	1	STREET LIGHTING	FOOTPATH LADYSMITH ROAD TO	GRIMSBY	528533.53	408756.38	2001		51675	1 Urbis LED	Axia 16 LED 500mA	28 Watts	6.00 Metres	Galvanised Steel	
Y	2	STREET LIGHTING	FOOTPATH LADYSMITH ROAD TO	GRIMSBY	528561.12	408701.19	2001		51676	1 Urbis LED	Axia 16 LED 500mA	28 Watts	6.00 Metres	Galvanised Steel	
Y	3	STREET LIGHTING	FOOTPATH LADYSMITH ROAD TO	GRIMSBY	528589.98	408642.96	2001		51677	1 Urbis LED	Axia 16 LED 500mA	28 Watts	6.00 Metres	Galvanised Steel	
Y	4	STREET LIGHTING	FOOTPATH LADYSMITH ROAD TO	GRIMSBY	528618.59	408584.43	2001		51678	1 Urbis LED	Axia 16 LED 500mA	28 Watts	6.00 Metres	Galvanised Steel	
Y	5	STREET LIGHTING	FOOTPATH LADYSMITH ROAD TO	GRIMSBY	528630.39	408543.8	2000		51679	1 Urbis LED	Axia 16 LED 500mA	28 Watts	6.00 Metres	Galvanised Steel	
Y	6	STREET LIGHTING	FOOTPATH LADYSMITH ROAD TO	GRIMSBY	528569.02	408531.04	2001		51680	1 Urbis LED	Axia 16 LED 500mA	28 Watts	6.00 Metres	Galvanised Steel	
Y	7	STREET LIGHTING	FOOTPATH LADYSMITH ROAD TO	GRIMSBY	528506.04	408517.88	2001		51681	1 Urbis LED	Axia 16 LED 500mA	28 Watts	6.00 Metres	Galvanised Steel	
Y	8	STREET LIGHTING	FOOTPATH LADYSMITH ROAD TO	GRIMSBY	528443.25	408504.72	2001		51682	1 Urbis LED	Axia 16 LED 500mA	28 Watts	6.00 Metres	Galvanised Steel	
Y	9	STREET LIGHTING	FOOTPATH LADYSMITH ROAD TO	GRIMSBY	528387.15	408493.07	2001		51683	1 Urbis LED	Axia 16 LED 500mA	28 Watts	6.00 Metres	Galvanised Steel	
Y	10	STREET LIGHTING	FOOTPATH LADYSMITH ROAD TO	GRIMSBY	528324.77	408479.4	2001		51684	1 Urbis LED	Axia 16 LED 500mA	28 Watts	6.00 Metres	Galvanised Steel	
Y	11	STREET LIGHTING	FOOTPATH LADYSMITH ROAD TO	GRIMSBY	528670.49	408510.99	2001		51685	1 Urbis LED	Axia 16 LED 500mA	28 Watts	6.00 Metres	Galvanised Steel	
Y	12	STREET LIGHTING	FOOTPATH LADYSMITH ROAD TO	GRIMSBY	528699.1	408453.49	2001		51686	1 Urbis LED	Axia 16 LED 500mA	28 Watts	6.00 Metres	Galvanised Steel	
Y	1	STREET LIGHTING	ROSEMALLOW CLOSE	GRIMSBY	525806.75	406002.14	2020	01/04/2020	69853	Urbis	Axia 16 LED 500mA	28 Watts	6.00 Metres	Galvanised Steel	
Y	2	STREET LIGHTING	ROSEMALLOW CLOSE	GRIMSBY	525841.01	406009.45	2020	01/04/2020	69854	Urbis	Axia 16 LED 500mA	28 Watts	6.00 Metres	Galvanised Steel	
Y	3	STREET LIGHTING	ROSEMALLOW CLOSE	GRIMSBY	525861.62	406018.12	2020	01/04/2020	69855	Urbis	Axia 16 LED 500mA	28 Watts	6.00 Metres	Galvanised Steel	
Y	1	STREET LIGHTING	BECKLANDS AVENUE	NEW WALTHAM	527627.29	404877.01	2019	01/03/2019	68867	1 Urbis LED	Axia 16 LED 500mA	28 Watts	6.00 Metres	Galvanised Steel	
Y	2	STREET LIGHTING	BECKLANDS AVENUE	NEW WALTHAM	527654.82	404854.51	2019	01/03/2019	68868	1 Urbis LED	Axia 16 LED 500mA	28 Watts	6.00 Metres	Galvanised Steel	
Y	3	STREET LIGHTING	BECKLANDS AVENUE	NEW WALTHAM	527685.83	404842.81	2019	01/03/2019	68869	1 Urbis LED	Axia 16 LED 500mA	28 Watts	6.00 Metres	Galvanised Steel	
Y	4	STREET LIGHTING	BECKLANDS AVENUE	NEW WALTHAM	527723.17	404833.61	2019	01/03/2019	68870	1 Urbis LED	Axia 16 LED 500mA	28 Watts	6.00 Metres	Galvanised Steel	
Y	5	STREET LIGHTING	BECKLANDS AVENUE	NEW WALTHAM	527747.38	404857.51	2019	01/03/2019	68871	1 Urbis LED	Axia 16 LED 500mA	28 Watts	6.00 Metres	Galvanised Steel	
Y	6	STREET LIGHTING	BECKLANDS AVENUE	NEW WALTHAM	527767.16	404889.49	2019	01/03/2019	68872	1 Urbis LED	Axia 16 LED 500mA	28 Watts	6.00 Metres	Galvanised Steel	
Y	7	STREET LIGHTING	BECKLANDS AVENUE	NEW WALTHAM	527782.19	404906.89	2019	01/03/2019	68873	1 Urbis LED	Axia 16 LED 500mA	28 Watts	6.00 Metres	Galvanised Steel	
Y	8	STREET LIGHTING	BECKLANDS AVENUE	NEW WALTHAM	527814.28	404935.11	2022	01/03/2022	70192	1 Urbis LED	Axia 16 LED 500mA	28 Watts	6.00 Metres	Galvanised Steel	
Y	9	STREET LIGHTING	BECKLANDS AVENUE	NEW WALTHAM	527835.42	404948.38	2022	01/03/2022	70193	1 Urbis LED	Axia 16 LED 500mA	28 Watts	6.00 Metres	Galvanised Steel	
Y	10	STREET LIGHTING	BECKLANDS AVENUE	NEW WALTHAM	527869.67	404967.61	2022	01/03/2022	70194	1 Urbis LED	Axia 16 LED 500mA	28 Watts	6.00 Metres	Galvanised Steel	
Y	1	STREET LIGHTING	KIRKENES CLOSE	NEW WALTHAM	527662.25	404834.11	2019	01/03/2019	68874	1 Urbis LED	Axia 16 LED 500mA	28 Watts	6.00 Metres	Galvanised Steel	
Y	2	STREET LIGHTING	KIRKENES CLOSE	NEW WALTHAM	527651.81	404806.26	2019	01/03/2019	68875	1 Urbis LED	Axia 16 LED 500mA	28 Watts	6.00 Metres	Galvanised Steel	
Y	3	STREET LIGHTING	KIRKENES CLOSE	NEW WALTHAM	527645.17	404786.81	2019	01/03/2019	68876	1 Urbis LED	Axia 16 LED 500mA	28 Watts	6.00 Metres	Galvanised Steel	
Y	1	STREET LIGHTING	TROMSO CLOSE	NEW WALTHAM	527672.86	404863.38	2022	01/03/2022	68877	Urbis	Axia 16 LED 500mA	28 Watts	6.00 Metres	Galvanised Steel	
Y	2	STREET LIGHTING	TROMSO CLOSE	NEW WALTHAM	527683.93	404894.71	2020	01/03/2020	68878	Urbis	Axia 16 LED 500mA	28 Watts	6.00 Metres	Galvanised Steel	
Y	3	STREET LIGHTING	TROMSO CLOSE	NEW WALTHAM	527692.63	404923.51	2020	01/03/2020	68879	Urbis	Axia 16 LED 500mA	28 Watts	6.00 Metres	Galvanised Steel	
Y	1	STREET LIGHTING	TRONDHEIM CLOSE	NEW WALTHAM	527747.71	404911.01	2020	01/03/2020	68880	Urbis	Axia 16 LED 500mA	28 Watts	6.00 Metres	Galvanised Steel	
Y	2	STREET LIGHTING	TRONDHEIM CLOSE	NEW WALTHAM	527726.34	404941.07	2020	01/03/2020	68881	Urbis	Axia 16 LED 500mA	28 Watts	6.00 Metres	Galvanised Steel	
Y	3	STREET LIGHTING	TRONDHEIM CLOSE	NEW WALTHAM	527701.18	404957.37	2020	01/03/2020	68882	Urbis	Axia 16 LED 500mA	28 Watts	6.00 Metres	Galvanised Steel	
Y	4	STREET LIGHTING	TRONDHEIM CLOSE	NEW WALTHAM	527717.48	404975.09	2020	01/03/2020	68883	Urbis	Axia 16 LED 500mA	28 Watts	6.00 Metres	Galvanised Steel	
Y	1	STREET LIGHTING	BERGEN CLOSE	NEW WALTHAM	527781.87	404875.56	2020	01/03/2020	68884	Urbis	Axia 16 LED 500mA	28 Watts	6.00 Metres	Galvanised Steel	
Y	2	STREET LIGHTING	BERGEN CLOSE	NEW WALTHAM	527800.23	404853.41	2020	01/03/2020	68885	Urbis	Axia 16 LED 500mA	28 Watts	6.00 Metres	Galvanised Steel	
Y	1	STREET LIGHTING	KRISTIANSAND CLOSE	NEW WALTHAM	527828.66	404910.74	2022	01/03/2022	70207	1 Urbis LED	Axia 16 LED 500mA	28 Watts	6.00 Metres	Galvanised Steel	
Y	2	STREET LIGHTING	KRISTIANSAND CLOSE	NEW WALTHAM	527848.66	404871.29	2022	01/03/2022	70208	1 Urbis LED	Axia 16 LED 500mA	28 Watts	6.00 Metres	Galvanised Steel	
Y	1	STREET LIGHTING	STAVANGER CLOSE	NEW WALTHAM	527789.62	404945.97	2022	01/03/2022	70195	1 Urbis LED	Axia 16 LED 500mA	28 Watts	6.00 Metres	Galvanised Steel	
Y	2	STREET LIGHTING	STAVANGER CLOSE	NEW WALTHAM	527774.38	404967.61	2022	01/03/2022	70196	1 Urbis LED	Axia 16 LED 500mA	28 Watts	6.00 Metres	Galvanised Steel	
Y	3	STREET LIGHTING	STAVANGER CLOSE	NEW WALTHAM	527747.31	404988.55	2022	01/03/2022	70197	1 Urbis LED	Axia 16 LED 500mA	28 Watts	6.00 Metres	Galvanised Steel	
Y	4	STREET LIGHTING	STAVANGER CLOSE	NEW WALTHAM	527723.78	404999.57	2022	01/03/2022	70198	1 Urbis LED	Axia 16 LED 500mA	28 Watts	6.00 Metres	Galvanised Steel	
Y	1	STREET LIGHTING	BAATSFJORD CLOSE	NEW WALTHAM	527828.39	404976.99	2022	01/03/2022	70199	1 Urbis LED	Axia 16 LED 500mA	28 Watts	6.00 Metres	Galvanised Steel	
Y	2	STREET LIGHTING	BAATSFJORD CLOSE	NEW WALTHAM	527811.52	405007.61	2022	01/03/2022	70200	1 Urbis LED	Axia 16 LED 500mA	28 Watts	6.00 Metres	Galvanised Steel	
Y	3	STREET LIGHTING	BAATSFJORD CLOSE	NEW WALTHAM	527783.77	405042.69	2022	01/03/2022	70201	1 Urbis LED	Axia 16 LED 500mA	28 Watts	6.00 Metres	Galvanised Steel	
Y	4	STREET LIGHTING	BAATSFJORD CLOSE	NEW WALTHAM	527755.34	405053.98	2022	01/03/2022	70202	1 Urbis LED	Axia 16 LED 500mA	28 Watts	6.00 Metres	Galvanised Steel	
Y	5	STREET LIGHTING	BAATSFJORD CLOSE	NEW WALTHAM	527747.86	405028.01	2022	01/03/2022	70203	1 Urbis LED	Axia 16 LED 500mA	28 Watts	6.00 Metres	Galvanised Steel	
Y	1	STREET LIGHTING	VARDO CLOSE	NEW WALTHAM	527875.87	404944.07	2022	01/03/2022	70204	1 Urbis LED	Axia 16 LED 500mA	28 Watts	6.00 Metres	Galvanised Steel	
Y	2	STREET LIGHTING	VARDO CLOSE	NEW WALTHAM	527892.19	404919.99	2022	01/03/2022	70205	1 Urbis LED	Axia 16 LED 500mA	28 Watts	6.00 Metres	Galvanised Steel	
Y	3	STREET LIGHTING	VARDO CLOSE	NEW WALTHAM	527895.86	404896.45	2022	01/03/2022	70206	1 Urbis LED	Axia 16 LED 500mA	28 Watts	6.00 Metres	Galvanised Steel	
Y	1	STREET LIGHTING	MANOR FARM MEWS	BRADLEY	524143.37	406790.44	2017	23/03/2017	67341	DW Windsor	Salisbury 15 LED	30 Watts	6.00 Metres	Galvanised Steel	
Y	2	STREET LIGHTING	MANOR FARM MEWS	BRADLEY	524132.06	406812.08	2017	23/03/2017	67342	DW Windsor	Salisbury 15 LED	30 Watts	6.00 Metres	Galvanised Steel	
Y	3	STREET LIGHTING	MANOR FARM MEWS	BRADLEY	524105.92	406810.53	2017	23/03/2017	67343	DW Windsor	Salisbury 15 LED	30 Watts	6.00 Metres	Galvanised Steel	
Y	4	STREET LIGHTING	MANOR FARM MEWS	BRADLEY	524095.87	406826.69	2017	23/03/2017	67344	DW Windsor	Salisbury 15 LED	30 Watts	6.00 Metres	Galvanised Steel	
Y	5	STREET LIGHTING	MANOR FARM MEWS	BRADLEY	524073.38	406828.52	2017	23/03/2017	67345	DW Windsor	Salisbury 15 LED	30 Watts	6.00 Metres	Galvanised Steel	
Y	6	STREET LIGHTING	MANOR FARM MEWS	BRADLEY	524069.07	406802.61	2017	23/03/2017	67346	DW Windsor	Salisbury 15 LED	30 Watts	6.00 Metres	Galvanised Steel	
Y	1	STREET LIGHTING	SIDINGS ROAD	GRIMSBY	524855.71	409836.53	2006	01/04/2006	67506	Urbis	AXIA 48 LED 730mA	102 Watts	10.00 Metres	Stainless Steel	
Y	2	STREET LIGHTING	SIDINGS ROAD	GRIMSBY	524870.11	409851.08	2006	01/04/2006	67592	Urbis	AXIA 48 LED 730mA	102 Watts	10.00 Metres	Stainless Steel	
Y	3	STREET LIGHTING	SIDINGS ROAD	GRIMSBY	524894.39	409866.23	2006	01/04/2006	67593	Urbis	AXIA 48 LED 730mA	102 Watts	10.00 Metres	Stainless Steel	
Y	4	STREET LIGHTING	SIDINGS ROAD	GRIMSBY	524925.89	409875.83	2006	01/04/2006	67594	Urbis	AXIA 48 LED 730mA	102 Watts	10.00 Metres	Stainless Steel	
Y	5	STREET LIGHTING	SIDINGS ROAD	GRIMSBY	524964.14	409884.38	2006	01/04/2006	67595	Urbis	AXIA 48 LED 730mA	102 Watts	10.00 Metres	Stainless Steel	
Y	6	STREET LIGHTING	SIDINGS ROAD	GRIMSBY	524989.19	409906.28	2006	01/04/2006	67596	Urbis	AXIA 48 LED 730mA	102 Watts	10.00 Metres	Stainless Steel	
Y	7	STREET LIGHTING	SIDINGS ROAD	GRIMSBY	525026.24	409944.68	2006	01/04/2006	67597	Urbis	AXIA 48 LED 730mA	102 Watts	10.00 Metres	Stainless Steel	
Y	8	STREET LIGHTING	SIDINGS ROAD	GRIMSBY	525051.29	409955.17	2006	01/04/2006	67598	Urbis	AXIA 48 LED 730mA	102 Watts	10.00 Metres	Stainless Steel	
Y	9	STREET LIGHTING	SIDINGS ROAD	GRIMSBY	525078.29	409963.27	2006	01/04/2006	67599	Urbis	AXIA 48 LED 730mA	102 Watts	10.00 Metres	Stainless Steel	
Y	10	STREET LIGHTING	SIDINGS ROAD	GRIMSBY	525102.44	409958.17	2006	01/04/2006	67600	Urbis	AXIA 48 LED 730mA	102 Watts	10.00 Metres	Stainless Steel	
Y	11	STREET LIGHTING	SIDINGS ROAD	GRIMSBY	525147.44	409949.03	2006	01/04/2006	67601	Urbis	AXIA 48 LED 730mA	102 Watts	10.00 Metres	Stainless Steel	
Y	12	STREET LIGHTING	SIDINGS ROAD	GRIMSBY	525141.44	409924.13	2006	01/04/2006	67602	Urbis	AXIA 48 LED 730mA	102 Watts	10.00 Metres	Stainless Steel	
Y	13	STREET LIGHTING	SIDINGS ROAD	GRIMSBY	525143.39	409896.38	2006	01/04/2006	67603	Urbis	AXIA 48 LED 730mA	102 Watts	10.00 Metres	Stainless Steel	
Y	14	STREET LIGHTING	SIDINGS ROAD	GRIMSBY	525153.34	409851.38	2006	01/04/2006	67604	Urbis	AXIA 48 LED 730mA	102 Watts	10.00 Metres	Stainless Steel	
Y	15	STREET LIGHTING	SIDINGS ROAD	GRIMSBY	525173.13	409824.38	2006	01/04/2006	67605	Urbis	AXIA 48 LED 730mA	102 Watts	10.00 Metres	Stainless Steel	
Y	16	STREET LIGHTING	SIDINGS ROAD	GRIMSBY	525202.13	409806.78	2006	01/04/2006	67606	Urbis	AXIA 48 LED 730mA	102 Watts	10.00 Metres	Stainless Steel	
Y	17	STREET LIGHTING	SIDINGS ROAD	GRIMSBY	525235.73	409787.98	2006	01/04/2006	67607	Urbis	AXIA 48 LED 730mA	102 Watts	10.00 Metres	Stainless Steel	
Y	18	STREET LIGHTING	SIDINGS ROAD	GRIMSBY	525261.93	409774.38	2006	01/04/2006	67608	Urbis	AXIA 48 LED 730mA	102 Watts	10.00 Metres	Stainless Steel	
Y	19	STREET LIGHTING	SIDINGS ROAD	GRIMSBY	525299.33	409757.38	2006	01/04/2006	67609	Urbis	AXIA 48 LED 730mA	102 Watts	10.00 Metres	Stainless Steel	
Y	20	STREET LIGHTING	SIDINGS ROAD	GRIMSBY	525348.73	409752.78	2006	01/04/2006	67610	Urbis	AXIA 48 LED 730mA	102 Watts	10.00 Metres	Stainless Steel	
Y	21	STREET LIGHTING	SIDINGS ROAD	GRIMSBY	525365.85	409765.18	2020	31/03/2020	68989	Urbis	Ampera Mini 16 LED 350mA	21 Watts	6.00 Metres	Galvanised Steel	
Y	23	STREET LIGHTING	SIDINGS ROAD	GRIMSBY	525438.69	409762.91	2020	31/03/2020	68990	Urbis	Ampera Mini 16 LED 350mA	21 Watts	6.00 Metres	Galvanised Steel	
Y	24	STREET LIGHTING	SIDINGS ROAD	GRIMSBY	525483.8	409748.22	2020	31/03/2020	68991	Urbis	Ampera Mini 16 LED 350mA	21 Watts	6.00 Metres	Galvanised Steel	
Y	25	STREET LIGHTING	SIDINGS ROAD	GRIMSBY	525519.92	409734.23	2020	31/03/2020	68992	Urbis	Ampera Mini 16 LED 350mA	21 Watts	6.00 Metres	Galvanised Steel	
Y	26	STREET LIGHTING	SIDINGS ROAD	GRIMSBY			2020	31/03/2020	68993	Urbis	Ampera Mini 16 LED 350mA	21 Watts	6.00 Metres	Galvanised Steel	
Y	1	STREET LIGHTING	CROMWELL CLOSE	GRIMSBY	525458.45	409783.66	2020	31/03/2020	68994	Urbis	Ampera Mini 16 LED 350mA	21 Watts	6.00 Metres	Galvanised Steel	
Y	2	STREET LIGHTING	CROMWELL CLOSE	GRIMSBY	525473.58	409806.94	2020	31/03/2020	68995	Urbis	Ampera Mini 16 LED 350mA	21 Watts	6.00 Metres	Galvanised Steel	
Y	1	STREET LIGHTING	ALLOTMENT WAY	GRIMSBY	525531.44	409700.19	2020	31/03/2020	69000	Urbis	Ampera Mini 16 LED 350mA	21 Watts	6.00 Metres	Galvanised Steel	

Y	2	STREET LIGHTING	ALLOTMENT WAY	GRIMSBY	525502.17	409676.14	2020	31/03/2020	68999	Urbis	Ampera Mini 16 LED 350mA	21 Watts	6.00 Metres	Galvanised Steel	
Y	1	STREET LIGHTING	WEST MARSH CLOSE	GRIMSBY	525409.89	409749.55	2020	31/03/2020	68996	Urbis	Ampera Mini 16 LED 350mA	21 Watts	6.00 Metres	Galvanised Steel	
Y	2	STREET LIGHTING	WEST MARSH CLOSE	GRIMSBY	525415.49	409717.43	2020	31/03/2020	68997	Urbis	Ampera Mini 16 LED 350mA	21 Watts	6.00 Metres	Galvanised Steel	
Y	3	STREET LIGHTING	WEST MARSH CLOSE	GRIMSBY	525450.01	409708.66	2020	31/03/2020	68998	Urbis	Ampera Mini 16 LED 350mA	21 Watts	6.00 Metres	Galvanised Steel	
Y	1	STREET LIGHTING	OAKFIELD LANE	WALTHAM	524987.2	403467.25	2018	25/06/2018	68979	1 Urbis LED	Axia 16 LED 350mA	28 Watts	6.00 Metres	Galvanised Steel	
Y	2	STREET LIGHTING	OAKFIELD LANE	WALTHAM	525003.71	403448.32	2018	25/06/2018	68980	1 Urbis LED	Axia 16 LED 350mA	28 Watts	6.00 Metres	Galvanised Steel	
Y	3	STREET LIGHTING	OAKFIELD LANE	WALTHAM	525020.22	403427.38	2018	25/06/2018	68981	1 Urbis LED	Axia 16 LED 350mA	28 Watts	6.00 Metres	Galvanised Steel	
Y	4	STREET LIGHTING	OAKFIELD LANE	WALTHAM			2018	25/06/2018	68982	1 Urbis LED	Axia 16 LED 350mA	28 Watts	6.00 Metres	Galvanised Steel	
Y	5	STREET LIGHTING	OAKFIELD LANE	WALTHAM			2018	25/06/2018	68983	1 Urbis LED	Axia 16 LED 350mA	28 Watts	6.00 Metres	Galvanised Steel	
Y	6	STREET LIGHTING	OAKFIELD LANE	WALTHAM	525065.15	403377.65	2018	25/06/2018	68985	1 Urbis LED	Axia 16 LED 350mA	28 Watts	6.00 Metres	Galvanised Steel	
Y	7	STREET LIGHTING	OAKFIELD LANE	WALTHAM			2018	25/06/2018	68986	1 Urbis LED	Axia 16 LED 350mA	28 Watts	6.00 Metres	Galvanised Steel	
Y	8	STREET LIGHTING	OAKFIELD LANE	WALTHAM			2018	05/11/2018	68987	1 Urbis LED	Axia 16 LED 350mA	28 Watts	6.00 Metres	Galvanised Steel	
Y	9	STREET LIGHTING	OAKFIELD LANE	WALTHAM			2018	05/11/2018	68984	1 Urbis LED	Axia 16 LED 350mA	28 Watts	6.00 Metres	Galvanised Steel	
Y	1	STREET LIGHTING	JERSEY PLACE	IMMINGHAM	518379.77	414085.23	2020	31/03/2020	69001	Urbis	Ampera 16 LED 500mA	28 Watts	6.00 Metres	Galvanised Steel	
Y	2	STREET LIGHTING	JERSEY PLACE	IMMINGHAM	518409.71	414102.61	2020	31/03/2020	69002	Urbis	Ampera 16 LED 500mA	28 Watts	6.00 Metres	Galvanised Steel	
Y	3	STREET LIGHTING	JERSEY PLACE	IMMINGHAM	518441.34	414109.6	2020	31/03/2020	69003	Urbis	Ampera 16 LED 500mA	28 Watts	6.00 Metres	Galvanised Steel	
Y	4	STREET LIGHTING	JERSEY PLACE	IMMINGHAM	518440.93	414128.84	2020	31/03/2020	69004	Urbis	Ampera 16 LED 500mA	28 Watts	6.00 Metres	Galvanised Steel	
Y	5	STREET LIGHTING	JERSEY PLACE	IMMINGHAM	518455.79	414140.35	2020	31/03/2020	69005	Urbis	Ampera 16 LED 500mA	28 Watts	6.00 Metres	Galvanised Steel	
Y	6	STREET LIGHTING	JERSEY PLACE	IMMINGHAM	518478.92	414160.77	2020	31/03/2020	69006	Urbis	Ampera 16 LED 500mA	28 Watts	6.00 Metres	Galvanised Steel	
Y	7	STREET LIGHTING	JERSEY PLACE	IMMINGHAM	518493.54	414166.68	2020	31/03/2020	69007	Urbis	Ampera 16 LED 500mA	28 Watts	6.00 Metres	Galvanised Steel	
Y	8	STREET LIGHTING	JERSEY PLACE	IMMINGHAM	518469.87	414105.98	2020	31/03/2020	69008	Urbis	Ampera 16 LED 500mA	28 Watts	6.00 Metres	Galvanised Steel	
Y	9	STREET LIGHTING	JERSEY PLACE	IMMINGHAM	518486.38	414100.12	2020	31/03/2020	69009	Urbis	Ampera 16 LED 500mA	28 Watts	6.00 Metres	Galvanised Steel	
Y	10	STREET LIGHTING	JERSEY PLACE	IMMINGHAM			2020	31/03/2020	69010	Urbis	Ampera 16 LED 500mA	28 Watts	6.00 Metres	Galvanised Steel	
Y	11	STREET LIGHTING	JERSEY PLACE	IMMINGHAM	518510.3	414053.96	2020	31/03/2020	69011	Urbis	Ampera 16 LED 500mA	28 Watts	6.00 Metres	Galvanised Steel	
Y	1	STREET LIGHTING	SIDINGS ROAD ROUNDABOUT	GRIMSBY	525111.74	409985.62	2006	01/04/2006	67611	Urbis	AXIA 48 LED 730mA	102 Watts	10.00 Metres	Stainless Steel	
Y	2	STREET LIGHTING	SIDINGS ROAD ROUNDABOUT	GRIMSBY	525146.39	409986.07	2006	01/04/2006	67612	Urbis	AXIA 48 LED 730mA	102 Watts	10.00 Metres	Stainless Steel	
Y	3	STREET LIGHTING	SIDINGS ROAD ROUNDABOUT	GRIMSBY	525123.74	409956.22	2006	01/04/2006	67613	Urbis	AXIA 48 LED 730mA	102 Watts	10.00 Metres	Stainless Steel	
Y	1	STREET LIGHTING	FOOTPATH SPRUCE AVENUE TO	GRIMSBY	525478.67	409245.45	2005		48585	Urbis	Axia 8 LED 350mA	10 Watts	6.00 Metres	Galvanised Steel	
Y	2	STREET LIGHTING	FOOTPATH SPRUCE AVENUE TO	GRIMSBY	525456.71	409250.91	2005		48586	Urbis	Axia 8 LED 350mA	10 Watts	6.00 Metres	Galvanised Steel	
Y	3	STREET LIGHTING	FOOTPATH SPRUCE AVENUE TO	GRIMSBY	525435.86	409243.76	2005		62958	Urbis	Axia 8 LED 350mA	10 Watts	6.00 Metres	Galvanised Steel	
Y	1	STREET LIGHTING	THE GREEN	WALTHAM	526634.01	403011.66	2021	31/03/2021	68753						
Y	1	STREET LIGHTING	WOODLAND WAY	WALTHAM	526521.22	404450.59	2020	05/10/2020	68313	Urbis	AXIA 16 LED 390mA	21 Watts	6.00 Metres	Galvanised Steel	
Y	2	STREET LIGHTING	WOODLAND WAY	WALTHAM	526555.27	404448.64	2020	05/10/2020	68315	Urbis	AXIA 16 LED 390mA	21 Watts	6.00 Metres	Galvanised Steel	
Y	3	STREET LIGHTING	WOODLAND WAY	WALTHAM	526586.98	404447.86	2020	05/10/2020	68316	Urbis	AXIA 16 LED 390mA	21 Watts	6.00 Metres	Galvanised Steel	
Y	4	STREET LIGHTING	WOODLAND WAY	WALTHAM	526609.35	404438.92	2020	05/10/2020	68317	Urbis	AXIA 16 LED 390mA	21 Watts	6.00 Metres	Galvanised Steel	
Y	5	STREET LIGHTING	WOODLAND WAY	WALTHAM	526608.77	404401.95	2020	05/10/2020	68318	Urbis	AXIA 16 LED 390mA	21 Watts	6.00 Metres	Galvanised Steel	
Y	6	STREET LIGHTING	WOODLAND WAY	WALTHAM	526608.18	404379.77	2020	05/10/2020	68319	Urbis	AXIA 16 LED 390mA	21 Watts	6.00 Metres	Galvanised Steel	
Y	7	STREET LIGHTING	WOODLAND WAY	WALTHAM	526590.48	404375.49	2020	05/10/2020	68320	Urbis	AXIA 16 LED 390mA	21 Watts	6.00 Metres	Galvanised Steel	
Y	8	STREET LIGHTING	WOODLAND WAY	WALTHAM	526572.78	404374.91	2020	05/10/2020	68321	Urbis	AXIA 16 LED 390mA	21 Watts	6.00 Metres	Galvanised Steel	
Y	1	STREET LIGHTING	HEALE DRIVE	IMMINGHAM			2023	20/10/2023	68752	Urbis	AXIA 16 LED 390mA	21 Watts	6.00 Metres	Galvanised Steel	
Y	3	STREET LIGHTING	HEALE DRIVE	IMMINGHAM			2022	22/03/2022	68856	Urbis	AXIA 16 LED 390mA	21 Watts	6.00 Metres	Galvanised Steel	
Y	4	STREET LIGHTING	HEALE DRIVE	IMMINGHAM			2022	22/03/2022	68857	Urbis	AXIA 16 LED 390mA	21 Watts	6.00 Metres	Galvanised Steel	
Y	5	STREET LIGHTING	HEALE DRIVE	IMMINGHAM			2022	18/03/2022	68858	Urbis	AXIA 16 LED 390mA	21 Watts	6.00 Metres	Galvanised Steel	
Y	6	STREET LIGHTING	HEALE DRIVE	IMMINGHAM			2022	18/03/2022	68859	Urbis	AXIA 16 LED 390mA	21 Watts	6.00 Metres	Galvanised Steel	
Y	7	STREET LIGHTING	HEALE DRIVE	IMMINGHAM			2022	18/03/2022	68860	Urbis	AXIA 16 LED 390mA	21 Watts	6.00 Metres	Galvanised Steel	
Y	8	STREET LIGHTING	HEALE DRIVE	IMMINGHAM			2022	18/03/2022	68861	Urbis	AXIA 16 LED 390mA	21 Watts	6.00 Metres	Galvanised Steel	
Y	9	STREET LIGHTING	HEALE DRIVE	IMMINGHAM			2022	18/03/2022	68862	Urbis	AXIA 16 LED 390mA	21 Watts	6.00 Metres	Galvanised Steel	
Y	10	STREET LIGHTING	HEALE DRIVE	IMMINGHAM			2022	04/08/2022	69136	Urbis	AXIA 16 LED 390mA	21 Watts	6.00 Metres	Galvanised Steel	
Y	1	STREET LIGHTING	VICKERS ROAD	NEW WALTHAM	527497.08	404383.85	2022	01/04/2022	69659	Urbis	Ampera Maxi 80 LED 700mA	163 Watts	10.00 Metres	Galvanised Steel	
Y	1	STREET LIGHTING	LITTLE COATES ROUNDABOUT	GRIMSBY	524594.98	408380.1	2021	01/02/2021	69794	Urbis	Axia 48 LED 960mA	104 Watts	10.00 Metres	Galvanised Steel	
Y	2	STREET LIGHTING	LITTLE COATES ROUNDABOUT	GRIMSBY	524616.18	408353.22	2021	01/02/2021	69795	Urbis	Axia 48 LED 960mA	104 Watts	10.00 Metres	Galvanised Steel	
Y	3	STREET LIGHTING	LITTLE COATES ROUNDABOUT	GRIMSBY	524585.33	408329.53	2021	01/02/2021	69797	Urbis	Axia 48 LED 960mA	104 Watts	10.00 Metres	Galvanised Steel	
Y	4	STREET LIGHTING	LITTLE COATES ROUNDABOUT	GRIMSBY	524565.27	408363.24	2021	01/02/2021	69798	Urbis	Axia 48 LED 960mA	104 Watts	10.00 Metres	Galvanised Steel	
Y	5	STREET LIGHTING	LITTLE COATES ROUNDABOUT	GRIMSBY	524600.57	408315.4	2021	01/02/2021	69799	Urbis	Axia 48 LED 960mA	104 Watts	10.00 Metres	Galvanised Steel	
Y	1	STREET LIGHTING	FOOTPATH FROM CORNWELL CLOSE	GRIMSBY	526271.93	407458.78	2017	01/04/2017	69851	Urbis	Axia 16 LED 350mA	19 Watts	6.00 Metres	Steel	
Y	1	STREET LIGHTING	FOOTPATH FROM CORDEAUX DRIVE	GRIMSBY	526380.21	407459.56	2017	01/04/2017	69850	Urbis	Axia 16 LED 350mA	19 Watts	6.00 Metres	Steel	
Y	2	STREET LIGHTING	FOOTPATH FROM CORDEAUX DRIVE	GRIMSBY	526348.54	407453.82	2017	01/04/2017	69852	Urbis	Axia 16 LED 350mA	19 Watts	6.00 Metres	Steel	
Y	1	STREET LIGHTING	FOOTPATH FROM HILDA STREET TO	GRIMSBY	528209.33	410219.53	2005		50819	Urbis	Teceo 24 LED 500mA	40 Watts	6.00 Metres	Galvanised Steel	
Y	2	STREET LIGHTING	FOOTPATH FROM HILDA STREET TO	GRIMSBY	528250.13	410210.75	2005		50820	Urbis	Teceo 24 LED 500mA	40 Watts	6.00 Metres	Galvanised Steel	
Y	1	STREET LIGHTING	INGS LANE FOOTPATH	IMMINGHAM	518998.26	414472.63	1997		51325	Urbis	Axia 8 LED 350mA	10 Watts	5.00 Metres	Galvanised Steel	
Y	2	STREET LIGHTING	INGS LANE FOOTPATH	IMMINGHAM	519025.22	414488.05	1997		51326	Urbis	Axia 8 LED 350mA	10 Watts	5.00 Metres	Galvanised Steel	
Y	3	STREET LIGHTING	INGS LANE FOOTPATH	IMMINGHAM	519053.21	414506.91	2023	01/02/2023	68730	Urbis	Axia 8 LED 350mA	10 Watts	6.00 Metres	Galvanised Steel	
Y	4	STREET LIGHTING	INGS LANE FOOTPATH	IMMINGHAM	519062.52	414487.24	1997		51328	Urbis	Axia 8 LED 350mA	10 Watts	5.00 Metres	Galvanised Steel	
Y	5	STREET LIGHTING	INGS LANE FOOTPATH	IMMINGHAM	519082.14	414455.48	2007		51329	Urbis	Axia 8 LED 350mA	10 Watts	6.00 Metres	Galvanised Steel	
Y	6	STREET LIGHTING	INGS LANE FOOTPATH	IMMINGHAM	519100.5	414429.91	2009		51330	Urbis	Axia 8 LED 350mA	10 Watts	5.00 Metres	Steel	
Y	7	STREET LIGHTING	INGS LANE FOOTPATH	IMMINGHAM	519116.88	414402.56	1997		51331	Urbis	Axia 8 LED 350mA	10 Watts	5.00 Metres	Galvanised Steel	
Y	8	STREET LIGHTING	INGS LANE FOOTPATH	IMMINGHAM	519133.04	414376.61	1997		51332	Urbis	Axia 8 LED 350mA	10 Watts	5.00 Metres	Galvanised Steel	
Y	9	STREET LIGHTING	INGS LANE FOOTPATH	IMMINGHAM	519148.92	414350.65	1997		51333	Urbis	Axia 8 LED 350mA	10 Watts	5.00 Metres	Galvanised Steel	
Y	10	STREET LIGHTING	INGS LANE FOOTPATH	IMMINGHAM	519164.67	414325.74	1997		51334	Urbis	Axia 8 LED 350mA	10 Watts	5.00 Metres	Galvanised Steel	
Y	11	STREET LIGHTING	INGS LANE FOOTPATH	IMMINGHAM	519181.86	414295.93	1997		51335	Urbis	Axia 8 LED 350mA	10 Watts	5.00 Metres	Galvanised Steel	
Y	12	STREET LIGHTING	INGS LANE FOOTPATH	IMMINGHAM	519197.84	414264.61	1997		51336	Urbis	Axia 8 LED 350mA	10 Watts	5.00 Metres	Galvanised Steel	
Y	13	STREET LIGHTING	INGS LANE FOOTPATH	IMMINGHAM	519213.81	414239.11	1997		51337	Urbis	Axia 8 LED 350mA	10 Watts	5.00 Metres	Galvanised Steel	
Y	14	STREET LIGHTING	INGS LANE FOOTPATH	IMMINGHAM	519229.61	414211.52	1997		51338	Urbis	Axia 8 LED 350mA	10 Watts	5.00 Metres	Galvanised Steel	
Y	1	STREET LIGHTING	FOOTPATH BETWEEN HUMBERVILLE	IMMINGHAM	518794.96	415051.68	1991		48740	Urbis	Axia 8 LED 350mA	10 Watts	5.00 Metres	Galvanised Steel	
Y	2	STREET LIGHTING	FOOTPATH BETWEEN HUMBERVILLE	IMMINGHAM	518816.41	415035.43	1991		48741	Urbis	Axia 8 LED 350mA	10 Watts	5.00 Metres	Galvanised Steel	
Y	3	STREET LIGHTING	FOOTPATH BETWEEN HUMBERVILLE	IMMINGHAM	518837.03	415055.92	2005		48742	Urbis	Axia 8 LED 350mA	10 Watts	6.00 Metres	Galvanised Steel	
Y	4	STREET LIGHTING	FOOTPATH BETWEEN HUMBERVILLE	IMMINGHAM	518855.92	415077.44	2005		48743	Urbis	Axia 8 LED 350mA	10 Watts	6.00 Metres	Galvanised Steel	
Y	5	STREET LIGHTING	FOOTPATH BETWEEN HUMBERVILLE	IMMINGHAM	518834.27	415098.83		17/03/2016	48744	Urbis	Axia 8 LED 350mA	10 Watts	6.00 Metres	Steel	
Y	6	STREET LIGHTING	FOOTPATH BETWEEN HUMBERVILLE	IMMINGHAM	518873.33	415064.5	2005		48745	Urbis	Axia 8 LED 350mA	10 Watts	6.00 Metres	Galvanised Steel	
Y	1	STREET LIGHTING	FOOTPATH FROM HIGHLAND TARN TO	IMMINGHAM	517965.64	414128.56	2013		48805	Urbis	Axia 8 LED 350mA	10 Watts	6.00 Metres	Galvanised Steel	
Y	2	STREET LIGHTING	FOOTPATH FROM HIGHLAND TARN TO	IMMINGHAM	517989.69	414137.04	2013		48806	Urbis	Axia 8 LED 350mA	10 Watts	6.00 Metres	Galvanised Steel	
Y	1	STREET LIGHTING	FOOTPATH BETWEEN 7 HADLEIGH	IMMINGHAM	518903.14	414276.73	1998		48688	Urbis	Axia 8 LED 350mA	10 Watts	5.00 Metres	Galvanised Steel	
Y	2	STREET LIGHTING	FOOTPATH BETWEEN 7 HADLEIGH	IMMINGHAM	518932.27	414281.15	1998		48689	Urbis	Axia 16 LED 350mA	19 Watts	5.00 Metres	Galvanised Steel	
Y	3	STREET LIGHTING	FOOTPATH BETWEEN 7 HADLEIGH	IMMINGHAM	518938.6	414257.97	1998		48690	Urbis	Axia 16 LED 350mA	19 Watts	5.00 Metres	Galvanised Steel	
Y	1	STREET LIGHTING	WILLOW TREE CLOSE	IMMINGHAM	518911.88	415091.74	2005		60754	Urbis	Axia 16 LED 350mA	19 Watts	5.00 Metres	Galvanised Steel	
Y	2	STREET LIGHTING	WILLOW TREE CLOSE	IMMINGHAM	518891.83	415106.91	2005		60755	Urbis	Axia 16 LED 350mA	19 Watts	5.00 Metres	Galvanised Steel	
Y	3	STREET LIGHTING	WILLOW TREE CLOSE	IMMINGHAM	518900.36	415117.74	2005		60756	Urbis	Axia 16 LED 350mA	19 Watts	5.00 Metres	Galvanised Steel	
Y	1	STREET LIGHTING	AINSWORTH ROAD	IMMINGHAM	517872.35	414856.03	2014	31/03/2014	42790	1 Urbis LED	Axia 16 LED 500mA	28 Watts	6.00 Metres	Steel	
Y	2	STREET LIGHTING	AINSWORTH ROAD	IMMINGHAM	517836.78	414834.45	2014	31/03/2014	42791	1 Urbis LED	Axia 16 LED 500mA	28 Watts	6.00 Metres	Steel	
Y	3	STREET LIGHTING	AINSWORTH ROAD	IMMINGHAM	517804.88	414815.4	2014	31/03/2014	42792	1 Urbis LED	Axia 16 LED 500mA	28 Watts	6.00 Metres	Steel	
Y	4	STREET LIGHTING	AINSWORTH ROAD	IMMINGHAM	517773.36	414796.28	2014	31/03/2014	42793	1 Urbis LED	Axia 16 LED 500mA	28 Watts	6.00 Metres	Steel	
Y	1	STREET LIGHTING	ALDEN CLOSE	IMMINGHAM	517987.61	414663.54	2005		42915	Urbis	Axia 16 LED 350mA	19 Watts	6.00 Metres	Stainless Steel	
Y	2	STREET LIGHTING	ALDEN CLOSE	IMMINGHAM	518017.68	414674.08	2005		42916	Urbis	Axia 16 LED 350mA	19 Watts	6.00 Metres	Stainless Steel	
Y	3	STREET LIGHTING	ALDEN CLOSE	IMMINGHAM	518042.62	414673.73	2005		42917	Urbis	Axia 16 LED 350mA	19 Watts	6.00 Metres	Stainless Steel	
Y	4	STREET LIGHTING	ALDEN CLOSE	IMMINGHAM	518063.4	414678	2005		42918	Urbis	Axia 16 LED 350mA	19 Watts	6.00 Metres	Stainless Steel	
Y	5	STREET LIGHTING	ALDEN CLOSE	IMMINGHAM	518089.4	414687.72	2005		42919	Urbis	Axia 16 LED 350mA	19 Watts	6.00 Metres	Stainless Steel	
Y	6	STREET LIGHTING	ALDEN CLOSE	IMMINGHAM	518120.04	414690.12	2005		42920	Urbis	Axia 16 LED 350mA	19 Watts	6.00 Metres	Stainless Steel	
Y	7	STREET LIGHTING	ALDEN CLOSE	IMMINGHAM	518151.5	414705.93	2005		42921	Urbis	Axia 16 LED 350mA	19 Watts	6.00 Metres	Stainless Steel	
Y	8	STREET LIGHTING	ALDEN CLOSE	IMMINGHAM	518181.97	414723.21	2005		42922	Urbis	Axia 16 LED 350mA	19 Watts	6.00 Metres	Stainless Steel	
Y	9	STREET LIGHTING	ALDEN CLOSE	IMMINGHAM	518202.99	414740.38	2014		42923	Urbis	Axia 16 LED 350mA	19 Watts	6.00 Metres	Galvanised Steel	
Y	1	STREET LIGHTING	ALLERTON DRIVE	IMMINGHAM	517970.41	414796.24	1986		43080	1 Urbis LED	Axia 16 LED 500mA	28 Watts	5.00 Metres	Galvanised Steel	
Y	2	STREET LIGHTING	ALLERTON DRIVE	IMMINGHAM	517997.37	414799.22	1986		43081	1 Urbis LED	Axia 16 LED 500mA	28 Watts	5.00 Metres	Galvanised Steel	
Y	3	STREET LIGHTING	ALLERTON DRIVE	IMMINGHAM	518027.42	414813.21	1986		43082	1 Urbis LED	Axia 16 LED 500mA	28 Watts	5.00 Metres	Galvanised Steel	
Y	4	STREET LIGHTING	ALLERTON DRIVE	IMMINGHAM	518052.36	414827.7	1992		43083	1 Urbis LED	Axia 16 LED 500mA	28 Watts	5.00 Metres	Galvanised Steel	
Y	1	STREET LIGHTING	ANGLESEY DRIVE	IMMINGHAM	518393.96	413849.89	2014	25/02/2014	68525	Urbis	Axia 16 LED 350mA	19 Watts	6.00 Metres	Galvanised Steel	
Y	2	STREET LIGHTING	ANGLESEY DRIVE	IMMINGHAM	518364.88	413845.44	2014	25/02/2014	68526	Urbis	Axia 16 LED 350mA	19 Watts	6.00 Metres	Galvanised Steel	
Y	3	STREET LIGHTING	ANGLESEY DRIVE	IMMINGHAM	518333.95	413809.14	2013	25/02/2013	68529	Urbis	Axia 16 LED 350mA	19 Watts	6.00 Metres	Galvanised Steel	
Y	4	STREET LIGHTING	ANGLESEY DRIVE	IMMINGHAM	518306.36	413803.04	2014	25/02/2014	68527	Urbis	Axia 16 LED 350mA	19 Watts	6.00 Metres	Galvanised Steel	
Y	5	STREET LIGHTING	ANGLESEY DRIVE	IMMINGHAM	518277.16	413781.86	2014	25/02/2014	68528	Urbis	Axia 16 LED 350mA	19 Watts	6.00 Metres	Galvanised Steel	
Y	1	STREET LIGHTING	ARRAN CLOSE	IMMINGHAM	518532.63	413813.81	2014	31/03/2014	43360	1 Urbis LED	Axia 16 LED 500mA	28 Watts	6.00 Metres	Steel	

Y	2	STREET LIGHTING	ARRAN CLOSE	IMMINGHAM	518564.4	413818.18	2014	31/03/2014	43361	1 Urbis LED	Axia 16 LED 500mA	28 Watts	6.00 Metres	Steel	
Y	1	STREET LIGHTING	ATWOOD CLOSE	IMMINGHAM	517929.22	415158.63	2014	31/03/2014	43479	1 Urbis LED	Axia 16 LED 500mA	28 Watts	6.00 Metres	Steel	
Y	2	STREET LIGHTING	ATWOOD CLOSE	IMMINGHAM	517958.33	415169.58	2014	31/03/2014	43480	1 Urbis LED	Axia 16 LED 500mA	28 Watts	6.00 Metres	Steel	
Y	1	STREET LIGHTING	BALFOUR PLACE	IMMINGHAM	517605.77	414842.55	2014	31/03/2014	43571	1 Urbis LED	Axia 16 LED 500mA	28 Watts	6.00 Metres	Steel	
Y	1	STREET LIGHTING	BATTERY STREET	IMMINGHAM	518996.69	415032.92	2002		43806	1 Urbis LED	Axia 16 LED 500mA	28 Watts	6.00 Metres	Galvanised Steel	
Y	2	STREET LIGHTING	BATTERY STREET	IMMINGHAM	518963.23	415017.46	2002		43807	1 Urbis LED	Axia 16 LED 500mA	28 Watts	6.00 Metres	Galvanised Steel	
Y	3	STREET LIGHTING	BATTERY STREET	IMMINGHAM	518953.07	414995.44	2004		43808	1 Urbis LED	Axia 16 LED 500mA	28 Watts	6.00 Metres	Stainless Steel	
Y	4	STREET LIGHTING	BATTERY STREET	IMMINGHAM	518920.13	414982.06	2002		43809	1 Urbis LED	Axia 16 LED 500mA	28 Watts	6.00 Metres	Galvanised Steel	
Y	5	STREET LIGHTING	BATTERY STREET	IMMINGHAM	518909.08	414959.68	2002		43810	1 Urbis LED	Axia 16 LED 500mA	28 Watts	6.00 Metres	Galvanised Steel	
Y	6	STREET LIGHTING	BATTERY STREET	IMMINGHAM	518872.76	414944.68	2002		43811	1 Urbis LED	Axia 16 LED 500mA	28 Watts	6.00 Metres	Galvanised Steel	
Y	7	STREET LIGHTING	BATTERY STREET	IMMINGHAM	518857.48	414917.4	2002		43812	1 Urbis LED	Axia 16 LED 500mA	28 Watts	6.00 Metres	Galvanised Steel	
Y	8	STREET LIGHTING	BATTERY STREET	IMMINGHAM	518833.65	414897.76	2002		43813	1 Urbis LED	Axia 16 LED 500mA	28 Watts	6.00 Metres	Galvanised Steel	
Y	9	STREET LIGHTING	BATTERY STREET	IMMINGHAM	518809.79	414878.29	2002		43814	1 Urbis LED	Axia 16 LED 500mA	28 Watts	6.00 Metres	Galvanised Steel	
Y	10	STREET LIGHTING	BATTERY STREET	IMMINGHAM	518788.95	414875.92	2002		43815	1 Urbis LED	Axia 16 LED 500mA	28 Watts	6.00 Metres	Galvanised Steel	
Y	1	STREET LIGHTING	BEECHWOOD AVENUE	IMMINGHAM	518303.76	414888.74	1974		43922	1 Urbis LED	Axia 16 LED 500mA	28 Watts	5.00 Metres	Galvanised Steel	
Y	2	STREET LIGHTING	BEECHWOOD AVENUE	IMMINGHAM	518334.01	414898.4	1974		43923	1 Urbis LED	Axia 16 LED 500mA	28 Watts	5.00 Metres	Galvanised Steel	
Y	3	STREET LIGHTING	BEECHWOOD AVENUE	IMMINGHAM	518361.91	414919.14	2009		43924	1 Urbis LED	Axia 16 LED 500mA	28 Watts	6.00 Metres	Steel	
Y	4	STREET LIGHTING	BEECHWOOD AVENUE	IMMINGHAM			2013	06/08/2013	68530	Urbis	Axia 16 LED 500mA	28 Watts	6.00 Metres	Galvanised Steel	
Y	5	STREET LIGHTING	BEECHWOOD AVENUE	IMMINGHAM	518388.95	414957.32	1974		43926	1 Urbis LED	Axia 16 LED 500mA	28 Watts	5.00 Metres	Galvanised Steel	
Y	6	STREET LIGHTING	BEECHWOOD AVENUE	IMMINGHAM	518406.92	414955.92	1974		43927	1 Urbis LED	Axia 16 LED 500mA	28 Watts	5.00 Metres	Galvanised Steel	
Y	7	STREET LIGHTING	BEECHWOOD AVENUE	IMMINGHAM	518402.87	414967.31	1974		43928	1 Urbis LED	Axia 16 LED 500mA	28 Watts	5.00 Metres	Galvanised Steel	
Y	8	STREET LIGHTING	BEECHWOOD AVENUE	IMMINGHAM	518407.04	414995.01	1974		43929	1 Urbis LED	Axia 16 LED 500mA	28 Watts	5.00 Metres	Galvanised Steel	
Y	1	STREET LIGHTING	BIRKDALE DRIVE	IMMINGHAM	518649.21	415074.63	2013	25/09/2013	44175	Urbis	Axia 16 LED 350mA	19 Watts	6.00 Metres	Galvanised Steel	
Y	2	STREET LIGHTING	BIRKDALE DRIVE	IMMINGHAM	518633.64	415097.35	1989		44176	Urbis	Axia 16 LED 350mA	19 Watts	5.00 Metres	Galvanised Steel	
Y	3	STREET LIGHTING	BIRKDALE DRIVE	IMMINGHAM	518609.09	415110.07	1989		44177	Urbis	Axia 16 LED 350mA	19 Watts	5.00 Metres	Galvanised Steel	
Y	4	STREET LIGHTING	BIRKDALE DRIVE	IMMINGHAM	518596.81	415120.77	1989		44178	Urbis	Axia 16 LED 350mA	19 Watts	5.00 Metres	Galvanised Steel	
Y	5	STREET LIGHTING	BIRKDALE DRIVE	IMMINGHAM	518620.1	415142.86	1989		44179	Urbis	Axia 16 LED 350mA	19 Watts	5.00 Metres	Galvanised Steel	
Y	1	STREET LIGHTING	BLOSSOM WAY	IMMINGHAM	517879.97	414392.9	1996		44250	Urbis	Axia 16 LED 350mA	19 Watts	6.00 Metres	Galvanised Steel	
Y	2	STREET LIGHTING	BLOSSOM WAY	IMMINGHAM	517891.87	414367.15	1998		44251	Urbis	Axia 16 LED 350mA	19 Watts	6.00 Metres	Galvanised Steel	
Y	3	STREET LIGHTING	BLOSSOM WAY	IMMINGHAM	517900.86	414346.2	1998		44252	Urbis	Axia 16 LED 350mA	19 Watts	6.00 Metres	Galvanised Steel	
Y	4	STREET LIGHTING	BLOSSOM WAY	IMMINGHAM	517910.86	414314.8	1998		44253	Urbis	Axia 16 LED 350mA	19 Watts	6.00 Metres	Galvanised Steel	
Y	5	STREET LIGHTING	BLOSSOM WAY	IMMINGHAM	517922.37	414295.43	1998		44254	Urbis	Axia 16 LED 350mA	19 Watts	6.00 Metres	Galvanised Steel	
Y	1	STREET LIGHTING	BLUESTONE LANE	IMMINGHAM	517590.65	414379.51	2021	17/12/2021	67988	Urbis	mpera Maxi 128 LED 700m	277 Watts	8.00 Metres	Galvanised Steel	
Y	2	STREET LIGHTING	BLUESTONE LANE	IMMINGHAM	517583.08	414413.57	2020	10/08/2020	68240	Urbis	Ampera 48 LED 700mA	104 Watts	8.00 Metres	Galvanised Steel	
Y	3	STREET LIGHTING	BLUESTONE LANE	IMMINGHAM	517587.77	414449.44	2020	10/08/2020	68241	Urbis	Ampera 48 LED 700mA	104 Watts	8.00 Metres	Galvanised Steel	
Y	4	STREET LIGHTING	BLUESTONE LANE	IMMINGHAM	517567.95	414477.29	2020	10/08/2020	68242	Urbis	Ampera 48 LED 700mA	104 Watts	8.00 Metres	Galvanised Steel	
Y	5	STREET LIGHTING	BLUESTONE LANE	IMMINGHAM	517574.15	414508.78	2020	10/08/2020	68243	Urbis	Ampera 48 LED 700mA	104 Watts	8.00 Metres	Galvanised Steel	
Y	6	STREET LIGHTING	BLUESTONE LANE	IMMINGHAM	517553.26	414538.44	2020	10/08/2020	68244	Urbis	Ampera 48 LED 700mA	104 Watts	8.00 Metres	Galvanised Steel	
Y	7	STREET LIGHTING	BLUESTONE LANE	IMMINGHAM	517557.21	414575.83	2020	10/08/2020	68245	Urbis	Ampera 48 LED 700mA	104 Watts	8.00 Metres	Galvanised Steel	
Y	8	STREET LIGHTING	BLUESTONE LANE	IMMINGHAM	517538.88	414601.86	2020	10/08/2020	68246	Urbis	Ampera 48 LED 700mA	104 Watts	8.00 Metres	Galvanised Steel	
Y	9	STREET LIGHTING	BLUESTONE LANE	IMMINGHAM	517545.39	414633.19	2020	10/08/2020	68247	Urbis	Ampera 48 LED 700mA	104 Watts	8.00 Metres	Galvanised Steel	
Y	10	STREET LIGHTING	BLUESTONE LANE	IMMINGHAM	517526.17	414666.49	2020	10/08/2020	68248	Urbis	Ampera 48 LED 700mA	104 Watts	8.00 Metres	Galvanised Steel	
Y	11	STREET LIGHTING	BLUESTONE LANE	IMMINGHAM	517537.08	414700.19	2005		44272	1 Urbis LED	Teceo 48 LED 500mA	79 Watts	8.00 Metres	Stainless Steel	
Y	12	STREET LIGHTING	BLUESTONE LANE	IMMINGHAM	517557.35	414730.82	2020	10/08/2020	68249	Urbis	Ampera 48 LED 700mA	104 Watts	8.00 Metres	Galvanised Steel	
Y	13	STREET LIGHTING	BLUESTONE LANE	IMMINGHAM	517562.81	414767.75	2020	10/08/2020	68250	Urbis	Ampera 48 LED 700mA	104 Watts	8.00 Metres	Galvanised Steel	
Y	14	STREET LIGHTING	BLUESTONE LANE	IMMINGHAM	517546.6	414789.01	2014		44275	1 Urbis LED	Teceo 48 LED 500mA	79 Watts	8.00 Metres	Galvanised Steel	
Y	15	STREET LIGHTING	BLUESTONE LANE	IMMINGHAM	517541.76	414825.88	2020	10/08/2020	68251	Urbis	Ampera 48 LED 700mA	104 Watts	8.00 Metres	Galvanised Steel	
Y	1	STREET LIGHTING	BRADFORD ROAD	IMMINGHAM	517952.66	414732.29	2009		44483	Urbis	Axia 16 LED 350mA	19 Watts	6.00 Metres	Steel	
Y	2	STREET LIGHTING	BRADFORD ROAD	IMMINGHAM	517917.66	414722.96	2009		44484	Urbis	Axia 16 LED 350mA	19 Watts	6.00 Metres	Steel	
Y	3	STREET LIGHTING	BRADFORD ROAD	IMMINGHAM	517881.65	414731.51	2008		44485	Urbis	Axia 16 LED 350mA	19 Watts	6.00 Metres	Steel	
Y	4	STREET LIGHTING	BRADFORD ROAD	IMMINGHAM	517849.22	414719.15	2009		44486	Urbis	Axia 16 LED 350mA	19 Watts	6.00 Metres	Steel	
Y	5	STREET LIGHTING	BRADFORD ROAD	IMMINGHAM	517820.91	414709.58	2008		44487	Urbis	Axia 16 LED 350mA	19 Watts	6.00 Metres	Steel	
Y	6	STREET LIGHTING	BRADFORD ROAD	IMMINGHAM	517791.28	414707.56	2008		44488	Urbis	Axia 16 LED 350mA	19 Watts	6.00 Metres	Steel	
Y	1	STREET LIGHTING	BREWSTER AVENUE	IMMINGHAM	518574.17	414305.68	1991		44652	Urbis	Axia 16 LED 350mA	19 Watts	6.00 Metres	Galvanised Steel	
Y	2	STREET LIGHTING	BREWSTER AVENUE	IMMINGHAM	518563.03	414331.7	1991		44653	Urbis	Axia 16 LED 350mA	19 Watts	6.00 Metres	Galvanised Steel	
Y	3	STREET LIGHTING	BREWSTER AVENUE	IMMINGHAM	518559.11	414365.14	2020	26/11/2020	68194	Urbis	Axia 16 LED 350mA	19 Watts	6.00 Metres	Galvanised Steel	
Y	4	STREET LIGHTING	BREWSTER AVENUE	IMMINGHAM	518588.47	414381.76	1991		44655	Urbis	Axia 16 LED 350mA	19 Watts	6.00 Metres	Galvanised Steel	
Y	5	STREET LIGHTING	BREWSTER AVENUE	IMMINGHAM	518620.5	414387.52	1991		44656	Urbis	Axia 16 LED 350mA	19 Watts	6.00 Metres	Galvanised Steel	
Y	6	STREET LIGHTING	BREWSTER AVENUE	IMMINGHAM	518641.76	414408.59	1991		44657	Urbis	Axia 16 LED 350mA	19 Watts	6.00 Metres	Galvanised Steel	
Y	1	STREET LIGHTING	CARVER ROAD	IMMINGHAM	518672.09	414365.69	1991		45408	Urbis	Axia 16 LED 350mA	19 Watts	6.00 Metres	Galvanised Steel	
Y	2	STREET LIGHTING	CARVER ROAD	IMMINGHAM	518658.16	414389.8	1991		45409	Urbis	Axia 16 LED 350mA	19 Watts	6.00 Metres	Galvanised Steel	
Y	3	STREET LIGHTING	CARVER ROAD	IMMINGHAM	518659.61	414418.15	1991		45410	Urbis	Axia 16 LED 350mA	19 Watts	6.00 Metres	Galvanised Steel	
Y	4	STREET LIGHTING	CARVER ROAD	IMMINGHAM	518681.18	414437.18	1991		45411	Urbis	Axia 16 LED 350mA	19 Watts	6.00 Metres	Galvanised Steel	
Y	5	STREET LIGHTING	CARVER ROAD	IMMINGHAM	518711.56	414444.84	1991		45412	Urbis	Axia 16 LED 350mA	19 Watts	6.00 Metres	Galvanised Steel	
Y	6	STREET LIGHTING	CARVER ROAD	IMMINGHAM	518736.63	414468.44	1991		45413	Urbis	Axia 16 LED 350mA	19 Watts	6.00 Metres	Galvanised Steel	
Y	7	STREET LIGHTING	CARVER ROAD	IMMINGHAM	518751.44	414493.06	1991		45414	Urbis	Axia 16 LED 350mA	19 Watts	6.00 Metres	Galvanised Steel	
Y	8	STREET LIGHTING	CARVER ROAD	IMMINGHAM	518759.92	414519.14	1991		45415	Urbis	Axia 16 LED 350mA	19 Watts	6.00 Metres	Galvanised Steel	
Y	9	STREET LIGHTING	CARVER ROAD	IMMINGHAM	518761.56	414546.04	1991		45416	Urbis	Axia 16 LED 350mA	19 Watts	6.00 Metres	Galvanised Steel	
Y	1	STREET LIGHTING	CEDAR DRIVE	IMMINGHAM	518173.01	415222.03	2014	31/03/2014	45525	1 Urbis LED	Axia 16 LED 500mA	28 Watts	6.00 Metres	Steel	
Y	2	STREET LIGHTING	CEDAR DRIVE	IMMINGHAM	518137.82	415196.65	2014	31/03/2014	45526	1 Urbis LED	Axia 16 LED 500mA	28 Watts	6.00 Metres	Steel	
Y	3	STREET LIGHTING	CEDAR DRIVE	IMMINGHAM	518105.93	415164.25	2014	31/03/2014	45527	1 Urbis LED	Axia 16 LED 500mA	28 Watts	6.00 Metres	Steel	
Y	1	STREET LIGHTING	CHESTNUT AVENUE	IMMINGHAM	519117.8	415118.05	2014	31/03/2014	45844	1 Urbis LED	Axia 16 LED 500mA	28 Watts	6.00 Metres	Steel	
Y	2	STREET LIGHTING	CHESTNUT AVENUE	IMMINGHAM	519131.98	415086.35	2014	31/03/2014	45845	1 Urbis LED	Axia 16 LED 500mA	28 Watts	6.00 Metres	Steel	
Y	3	STREET LIGHTING	CHESTNUT AVENUE	IMMINGHAM	519158.72	415068.23	2014	31/03/2014	45846	1 Urbis LED	Axia 16 LED 500mA	28 Watts	6.00 Metres	Steel	
Y	4	STREET LIGHTING	CHESTNUT AVENUE	IMMINGHAM	519183.42	415042	2014	31/03/2014	45847	1 Urbis LED	Axia 16 LED 500mA	28 Watts	6.00 Metres	Steel	
Y	5	STREET LIGHTING	CHESTNUT AVENUE	IMMINGHAM	519214.26	414998.7	2014	31/03/2014	45848	1 Urbis LED	Axia 16 LED 500mA	28 Watts	6.00 Metres	Steel	
Y	1	STREET LIGHTING	CHILTON CLOSE	IMMINGHAM	517882.13	414676.38	2014	31/03/2014	45921	1 Urbis LED	Axia 16 LED 500mA	28 Watts	6.00 Metres	Steel	
Y	1	STREET LIGHTING	CHURCH LANE	IMMINGHAM	517520	414850	2000		46002	1 Urbis LED	Teceo 32 LED 500mA	52 Watts	8.00 Metres	Galvanised Steel	
Y	2	STREET LIGHTING	CHURCH LANE	IMMINGHAM	517510	414878	2000		46003	1 Urbis LED	Teceo 32 LED 500mA	52 Watts	8.00 Metres	Galvanised Steel	
Y	3	STREET LIGHTING	CHURCH LANE	IMMINGHAM	517511	414909	2000		46004	1 Urbis LED	Teceo 32 LED 500mA	52 Watts	8.00 Metres	Galvanised Steel	
Y	4	STREET LIGHTING	CHURCH LANE	IMMINGHAM	517486	414938	2000		46005	1 Urbis LED	Teceo 32 LED 500mA	52 Watts	8.00 Metres	Galvanised Steel	
Y	5	STREET LIGHTING	CHURCH LANE	IMMINGHAM	517485	414969	2000		46006	1 Urbis LED	Teceo 32 LED 500mA	52 Watts	8.00 Metres	Galvanised Steel	
Y	6	STREET LIGHTING	CHURCH LANE	IMMINGHAM	517504	414993	2000		46007	1 Urbis LED	Teceo 32 LED 500mA	52 Watts	8.00 Metres	Galvanised Steel	
Y	7	STREET LIGHTING	CHURCH LANE	IMMINGHAM	517499	415018	2000		46008	1 Urbis LED	Teceo 32 LED 500mA	52 Watts	8.00 Metres	Galvanised Steel	
Y	8	STREET LIGHTING	CHURCH LANE	IMMINGHAM	517513	415038	2000		46009	1 Urbis LED	Teceo 32 LED 500mA	52 Watts	8.00 Metres	Galvanised Steel	
Y	9	STREET LIGHTING	CHURCH LANE	IMMINGHAM	517539	415056	2000		46010	1 Urbis LED	Teceo 32 LED 500mA	52 Watts	8.00 Metres	Galvanised Steel	
Y	10	STREET LIGHTING	CHURCH LANE	IMMINGHAM	517567	415070	2000		46011	1 Urbis LED	Teceo 32 LED 500mA	52 Watts	8.00 Metres	Galvanised Steel	
Y	11	STREET LIGHTING	CHURCH LANE	IMMINGHAM	517603	415087	2000		46012	1 Urbis LED	Teceo 32 LED 500mA	52 Watts	8.00 Metres	Galvanised Steel	
Y	12	STREET LIGHTING	CHURCH LANE	IMMINGHAM	517636	415089	2000		46013	1 Urbis LED	Teceo 32 LED 500mA	52 Watts	8.00 Metres	Galvanised Steel	
Y	13	STREET LIGHTING	CHURCH LANE	IMMINGHAM	517661	415117	2000		46014	1 Urbis LED	Teceo 32 LED 500mA	52 Watts	8.00 Metres	Galvanised Steel	
Y	14	STREET LIGHTING	CHURCH LANE	IMMINGHAM	517701	415123	2000		46015	1 Urbis LED	Teceo 32 LED 500mA	52 Watts	8.00 Metres	Galvanised Steel	
Y	15	STREET LIGHTING	CHURCH LANE	IMMINGHAM	517718	415153	2000		46016	1 Urbis LED	Teceo 32 LED 500mA	52 Watts	8.00 Metres	Galvanised Steel	
Y	16	STREET LIGHTING	CHURCH LANE	IMMINGHAM	517752	415157	2000		46017	1 Urbis LED	Teceo 32 LED 500mA	52 Watts	8.00 Metres	Galvanised Steel	
Y	17	STREET LIGHTING	CHURCH LANE	IMMINGHAM	517766	415187	2000		46018	1 Urbis LED	Teceo 32 LED 500mA	52 Watts	8.00 Metres	Galvanised Steel	
Y	18	STREET LIGHTING	CHURCH LANE	IMMINGHAM	517796	415209	2000		46019	Urbis	Axia 24 LED 540mA	41 Watts	8.00 Metres	Galvanised Steel	
Y	19	STREET LIGHTING	CHURCH LANE	IMMINGHAM	517821	415225	2000		46020	1 Urbis LED	Teceo 32 LED 500mA	52 Watts	8.00 Metres	Galvanised Steel	
Y	20	STREET LIGHTING	CHURCH LANE	IMMINGHAM	517854	415238	2000		46021	1 Urbis LED	Teceo 32 LED 500mA	52 Watts	8.00 Metres	Galvanised Steel	
Y	1	STREET LIGHTING	CLARENCE CLOSE	IMMINGHAM	517802.28	414285.6	1993		46116	Urbis	Axia 16 LED 350mA	19 Watts	6.00 Metres	Galvanised Steel	
Y	2	STREET LIGHTING	CLARENCE CLOSE	IMMINGHAM	517798.76	414310.67	2014	31/03/2014	46117	Urbis	Axia 16 LED 350mA	19 Watts	6.00 Metres	Steel	
Y	1	STREET LIGHTING	COPSE CLOSE	IMMINGHAM	518032.1	415253.87	2013	20/08/2013	46688	1 Urbis LED	Axia 16 LED 500mA	28 Watts	6.00 Metres	Galvanised Steel	
Y	2	STREET LIGHTING	COPSE CLOSE	IMMINGHAM	518062.17	415227.79	2014	31/03/2014	46689	1 Urbis LED	Axia 16 LED 500mA	28 Watts	6.00 Metres	Steel	
Y	3	STREET LIGHTING	COPSE CLOSE	IMMINGHAM	518089.59	415212.56	2014	31/03/2014	46690	1 Urbis LED	Axia 16 LED 500mA	28 Watts	6.00 Metres	Steel	
Y	1	STREET LIGHTING	CRAIK HILL AVENUE	IMMINGHAM	518287.41	414530.25	1991		46847	1 Urbis LED	Axia 16 LED 500mA	28 Watts	5.00 Metres	Galvanised Steel	
Y	2	STREET LIGHTING	CRAIK HILL AVENUE	IMMINGHAM	518248.17	414515.88	1991		46848	1 Urbis LED	Axia 16 LED 500mA	28 Watts	5.00 Metres	Galvanised Steel	
Y	3	STREET LIGHTING	CRAIK HILL AVENUE	IMMINGHAM	518213.87	414489.11	1991		46849	1 Urbis LED	Axia 16 LED 500mA	28 Watts	5.00 Metres	Galvanised Steel	
Y	4	STREET LIGHTING	CRAIK HILL AVENUE	IMMINGHAM	518182.1	414479.93	1991		46850	1 Urbis LED	Axia 16 LED 500mA	28 Watts	5.00 Metres	Galvanised Steel	
Y	1	STREET LIGHTING	CUSHMAN CRESCENT	IMMINGHAM	518264.67	414161.25	2014	11/03/2014	47204	1 Urbis LED	Axia 16 LED 500mA	28 Watts	6.00 Metres	Galvanised Steel	
Y	2	STREET LIGHTING	CUSHMAN CRESCENT	IMMINGHAM	518226.44	414180.68	2014	11/03/2014	47205	1 Urbis LED	Axia 16 LED 500mA	28 Watts	6.00 Metres	Galvanised Steel	
Y	3	STREET LIGHTING	CUSHMAN CRESCENT	IMMINGHAM	518218.59	414216.75	2014	11/03/2014	47206	1 Urbis LED	Axia 16 LED 500mA	28 Watts	6.00 Metres	Galvanised Steel	
Y	4	STREET LIGHTING	CUSHMAN CRESCENT	IMMINGHAM	518200.36	414247.7	2014	11/03/2014	47207	1 Urbis LED	Axia 16 LED 500mA	28 Watts	6.00 Metres	Galvanised Steel	

Y	1	STREET LIGHTING	FERNDOWN DRIVE	IMMINGHAM	518496.19	415044.14	1975		48472	Urbis	Axia 16 LED 350mA	19 Watts	5.00 Metres	Galvanised Steel	
Y	2	STREET LIGHTING	FERNDOWN DRIVE	IMMINGHAM	518512.14	415010.02	1975		48473	Urbis	Axia 16 LED 350mA	19 Watts	5.00 Metres	Galvanised Steel	
Y	3	STREET LIGHTING	FERNDOWN DRIVE	IMMINGHAM	518528.6	414987.94	1975		48474	Urbis	Axia 16 LED 350mA	19 Watts	5.00 Metres	Galvanised Steel	
Y	4	STREET LIGHTING	FERNDOWN DRIVE	IMMINGHAM	518559.61	414964.83	1975		48475	Urbis	Axia 16 LED 350mA	19 Watts	5.00 Metres	Galvanised Steel	
Y	5	STREET LIGHTING	FERNDOWN DRIVE	IMMINGHAM	518583.4	414966.67	1975		48476	Urbis	Axia 16 LED 350mA	19 Watts	5.00 Metres	Galvanised Steel	
Y	6	STREET LIGHTING	FERNDOWN DRIVE	IMMINGHAM	518605.17	414989.2	1975		48477	Urbis	Axia 16 LED 350mA	19 Watts	6.00 Metres	Galvanised Steel	
Y	7	STREET LIGHTING	FERNDOWN DRIVE	IMMINGHAM	518625.43	415014.96	1975		48478	Urbis	Axia 16 LED 350mA	19 Watts	5.00 Metres	Galvanised Steel	
Y	8	STREET LIGHTING	FERNDOWN DRIVE	IMMINGHAM	518646.56	415041.92	1975		48479	Urbis	Axia 16 LED 350mA	19 Watts	5.00 Metres	Galvanised Steel	
Y	9	STREET LIGHTING	FERNDOWN DRIVE	IMMINGHAM	518663.01	415063.05	1975		48480	Urbis	Axia 16 LED 350mA	19 Watts	5.00 Metres	Galvanised Steel	
Y	10	STREET LIGHTING	FERNDOWN DRIVE	IMMINGHAM	518684.27	415091.59	1975		48481	Urbis	Axia 16 LED 350mA	19 Watts	5.00 Metres	Galvanised Steel	
Y	11	STREET LIGHTING	FERNDOWN DRIVE	IMMINGHAM	518690.1	415119.5	1975		48482	Urbis	Axia 16 LED 350mA	19 Watts	5.00 Metres	Galvanised Steel	
Y	12	STREET LIGHTING	FERNDOWN DRIVE	IMMINGHAM	518675.61	415147.63	1975		48483	Urbis	Axia 16 LED 350mA	19 Watts	5.00 Metres	Galvanised Steel	
Y	13	STREET LIGHTING	FERNDOWN DRIVE	IMMINGHAM	518653.64	415177.41	1975		48484	Urbis	Axia 16 LED 350mA	19 Watts	5.00 Metres	Galvanised Steel	
Y	14	STREET LIGHTING	FERNDOWN DRIVE	IMMINGHAM	518632.57	415205.86	1975		48485	Urbis	Axia 16 LED 350mA	19 Watts	5.00 Metres	Galvanised Steel	
Y	15	STREET LIGHTING	FERNDOWN DRIVE	IMMINGHAM	518611.94	415234.02	1975		48486	Urbis	Axia 16 LED 350mA	19 Watts	6.00 Metres	Galvanised Steel	
Y	1	STREET LIGHTING	GUERNSEY GROVE	IMMINGHAM	518294.25	413926.48	2007		49959	Urbis	Axia 16 LED 350mA	19 Watts	6.00 Metres	Steel	
Y	2	STREET LIGHTING	GUERNSEY GROVE	IMMINGHAM	518270.08	413934.51	2007		49960	Urbis	Axia 16 LED 350mA	19 Watts	6.00 Metres	Steel	
Y	3	STREET LIGHTING	GUERNSEY GROVE	IMMINGHAM	518246.54	413913.22	2007		49961	Urbis	Axia 16 LED 350mA	19 Watts	6.00 Metres	Steel	
Y	4	STREET LIGHTING	GUERNSEY GROVE	IMMINGHAM	518220.84	413908.7	2007		49962	Urbis	Axia 16 LED 350mA	19 Watts	6.00 Metres	Steel	
Y	1	STREET LIGHTING	HADLEIGH ROAD	IMMINGHAM	518841.48	414400.77	1997		49996	Urbis	Axia 16 LED 350mA	19 Watts	5.00 Metres	Galvanised Steel	
Y	2	STREET LIGHTING	HADLEIGH ROAD	IMMINGHAM	518833.29	414377.15	1997		49997	Urbis	Axia 16 LED 350mA	19 Watts	5.00 Metres	Galvanised Steel	
Y	3	STREET LIGHTING	HADLEIGH ROAD	IMMINGHAM	518842.93	414356.86	1997		49998	Urbis	Axia 16 LED 350mA	19 Watts	5.00 Metres	Galvanised Steel	
Y	4	STREET LIGHTING	HADLEIGH ROAD	IMMINGHAM	518828.57	414329.82	1997		49999	Urbis	Axia 16 LED 350mA	19 Watts	5.00 Metres	Galvanised Steel	
Y	5	STREET LIGHTING	HADLEIGH ROAD	IMMINGHAM	518831.61	414308.12	1997		50000	Urbis	Axia 16 LED 350mA	19 Watts	5.00 Metres	Galvanised Steel	
Y	6	STREET LIGHTING	HADLEIGH ROAD	IMMINGHAM	518844.79	414281.86	1997		50001	Urbis	Axia 16 LED 350mA	19 Watts	5.00 Metres	Galvanised Steel	
Y	7	STREET LIGHTING	HADLEIGH ROAD	IMMINGHAM	518867.96	414275.53	1997		50002	Urbis	Axia 16 LED 350mA	19 Watts	5.00 Metres	Galvanised Steel	
Y	8	STREET LIGHTING	HADLEIGH ROAD	IMMINGHAM	518881.26	414251.05	1997		50003	Urbis	Axia 16 LED 350mA	19 Watts	5.00 Metres	Galvanised Steel	
Y	9	STREET LIGHTING	HADLEIGH ROAD	IMMINGHAM	518905.78	414260.93	1997		50004	Urbis	Axia 16 LED 350mA	19 Watts	5.00 Metres	Galvanised Steel	
Y	10	STREET LIGHTING	HADLEIGH ROAD	IMMINGHAM	518922.03	414248.9	1997		50005	Urbis	Axia 16 LED 350mA	19 Watts	5.00 Metres	Galvanised Steel	
Y	11	STREET LIGHTING	HADLEIGH ROAD	IMMINGHAM	518935.39	414228.05	1997		50006	Urbis	Axia 16 LED 350mA	19 Watts	5.00 Metres	Galvanised Steel	
Y	12	STREET LIGHTING	HADLEIGH ROAD	IMMINGHAM	518962.63	414233.51	1997		50007	Urbis	Axia 16 LED 350mA	19 Watts	5.00 Metres	Galvanised Steel	
Y	13	STREET LIGHTING	HADLEIGH ROAD	IMMINGHAM	518987.87	414221.88	1997		50008	Urbis	Axia 16 LED 350mA	19 Watts	5.00 Metres	Galvanised Steel	
Y	14	STREET LIGHTING	HADLEIGH ROAD	IMMINGHAM	519006.86	414233.49	1997		50009	Urbis	Axia 16 LED 350mA	19 Watts	5.00 Metres	Galvanised Steel	
Y	15	STREET LIGHTING	HADLEIGH ROAD	IMMINGHAM	519027.87	414232.6	1997		50010	Urbis	Axia 16 LED 350mA	19 Watts	5.00 Metres	Galvanised Steel	
Y	16	STREET LIGHTING	HADLEIGH ROAD	IMMINGHAM	519049.26	414222.16	1997		50011	Urbis	Axia 16 LED 350mA	19 Watts	5.00 Metres	Galvanised Steel	
Y	17	STREET LIGHTING	HADLEIGH ROAD	IMMINGHAM	519072.55	414218.67	1997		50012	Urbis	Axia 16 LED 350mA	19 Watts	5.00 Metres	Galvanised Steel	
Y	18	STREET LIGHTING	HADLEIGH ROAD	IMMINGHAM	519095.84	414221.26	1997		50013	Urbis	Axia 16 LED 350mA	19 Watts	5.00 Metres	Galvanised Steel	
Y	19	STREET LIGHTING	HADLEIGH ROAD	IMMINGHAM	519102.17	414202.72	1997		50014	Urbis	Axia 16 LED 350mA	19 Watts	5.00 Metres	Galvanised Steel	
Y	20	STREET LIGHTING	HADLEIGH ROAD	IMMINGHAM	519119.64	414181.14	1997		50015	Urbis	Axia 16 LED 350mA	19 Watts	5.00 Metres	Galvanised Steel	
Y	1	STREET LIGHTING	HAMISH WALK	IMMINGHAM	517915.38	414157.42	1974		50114	1 Urbis LED	Axia 16 LED 500mA	28 Watts	5.00 Metres	Galvanised Steel	
Y	2	STREET LIGHTING	HAMISH WALK	IMMINGHAM	517879.99	414153.61	1974		50115	1 Urbis LED	Axia 16 LED 500mA	28 Watts	5.00 Metres	Galvanised Steel	
Y	3	STREET LIGHTING	HAMISH WALK	IMMINGHAM	517845.84	414147.27	1974		50116	1 Urbis LED	Axia 16 LED 500mA	28 Watts	5.00 Metres	Galvanised Steel	
Y	1	STREET LIGHTING	HAWTHORN AVENUE	IMMINGHAM	519252.94	415146.85	2003		50358	Urbis	Axia 16 LED 350mA	19 Watts	6.00 Metres	Stainless Steel	
Y	2	STREET LIGHTING	HAWTHORN AVENUE	IMMINGHAM	519230.97	415134.34	2014	31/03/2014	50359	Urbis	Axia 16 LED 350mA	19 Watts	6.00 Metres	Steel	
Y	3	STREET LIGHTING	HAWTHORN AVENUE	IMMINGHAM	519205.51	415127.49	2007		50360	Urbis	Axia 16 LED 350mA	19 Watts	6.00 Metres	Steel	
Y	4	STREET LIGHTING	HAWTHORN AVENUE	IMMINGHAM	519184.39	415145.09	2014	31/03/2014	50361	Urbis	Axia 16 LED 350mA	19 Watts	6.00 Metres	Steel	
Y	5	STREET LIGHTING	HAWTHORN AVENUE	IMMINGHAM	519166.33	415167.22	2014	31/03/2014	50362	Urbis	Axia 16 LED 350mA	19 Watts	6.00 Metres	Steel	
Y	6	STREET LIGHTING	HAWTHORN AVENUE	IMMINGHAM	519142.53	415197.41	2014	31/03/2014	50363	Urbis	Axia 16 LED 350mA	19 Watts	6.00 Metres	Steel	
Y	7	STREET LIGHTING	HAWTHORN AVENUE	IMMINGHAM	519154	415155.75	2014	31/03/2014	50364	Urbis	Axia 16 LED 350mA	19 Watts	6.00 Metres	Steel	
Y	8	STREET LIGHTING	HAWTHORN AVENUE	IMMINGHAM	519128.86	415135.74	2014	31/03/2014	50365	Urbis	Axia 16 LED 350mA	19 Watts	6.00 Metres	Steel	
Y	9	STREET LIGHTING	HAWTHORN AVENUE	IMMINGHAM	519101.27	415125.04	2014	31/03/2014	50366	Urbis	Axia 16 LED 350mA	19 Watts	6.00 Metres	Steel	
Y	10	STREET LIGHTING	HAWTHORN AVENUE	IMMINGHAM	519081.72	415100.82	2014	31/03/2014	50367	Urbis	Axia 16 LED 350mA	19 Watts	6.00 Metres	Steel	
Y	11	STREET LIGHTING	HAWTHORN AVENUE	IMMINGHAM	519056.36	415091	2014	31/03/2014	50368	Urbis	Axia 16 LED 350mA	19 Watts	6.00 Metres	Steel	
Y	1	STREET LIGHTING	HELEN CRESCENT	IMMINGHAM	517382.29	414616.29	2008		50475	1 Urbis LED	Axia 16 LED 500mA	28 Watts	6.00 Metres	Steel	
Y	2	STREET LIGHTING	HELEN CRESCENT	IMMINGHAM	517376.06	414647.15	2008		50476	1 Urbis LED	Axia 16 LED 500mA	28 Watts	6.00 Metres	Steel	
Y	3	STREET LIGHTING	HELEN CRESCENT	IMMINGHAM	517396.93	414667.13	2008		50477	1 Urbis LED	Axia 16 LED 500mA	28 Watts	6.00 Metres	Steel	
Y	4	STREET LIGHTING	HELEN CRESCENT	IMMINGHAM	517426.49	414662.14	2008		50478	1 Urbis LED	Axia 16 LED 500mA	28 Watts	6.00 Metres	Steel	
Y	1	STREET LIGHTING	HIGHFIELD AVENUE	IMMINGHAM	517694.69	414351.76	2019	18/01/2019	50743	Urbis	Axia 16 LED 350mA	19 Watts	6.00 Metres	Galvanised Steel	
Y	2	STREET LIGHTING	HIGHFIELD AVENUE	IMMINGHAM	517696.79	414329.46	2013		50744	Urbis	Axia 16 LED 350mA	19 Watts	6.00 Metres	Steel	
Y	3	STREET LIGHTING	HIGHFIELD AVENUE	IMMINGHAM	517689.75	414306.78	2013		50745	Urbis	Axia 16 LED 350mA	19 Watts	6.00 Metres	Steel	
Y	4	STREET LIGHTING	HIGHFIELD AVENUE	IMMINGHAM	517689.02	414285.76	2013		50746	Urbis	Axia 16 LED 350mA	19 Watts	6.00 Metres	Steel	
Y	5	STREET LIGHTING	HIGHFIELD AVENUE	IMMINGHAM	517687.93	414255.51	2013		50747	Urbis	Axia 16 LED 350mA	19 Watts	6.00 Metres	Steel	
Y	1	STREET LIGHTING	HIGHLAND TARN	IMMINGHAM	517867.28	414260.06	2014	11/03/2014	68531	Urbis	Axia 16 LED 350mA	19 Watts	6.00 Metres	Galvanised Steel	
Y	2	STREET LIGHTING	HIGHLAND TARN	IMMINGHAM	517899.63	414226	2014	11/03/2014	68532	Urbis	Axia 16 LED 350mA	19 Watts	6.00 Metres	Galvanised Steel	
Y	3	STREET LIGHTING	HIGHLAND TARN	IMMINGHAM	517918.35	414195.84	2014	11/03/2014	68533	Urbis	Axia 16 LED 350mA	19 Watts	6.00 Metres	Galvanised Steel	
Y	4	STREET LIGHTING	HIGHLAND TARN	IMMINGHAM	517934.11	414171.73	2014	11/03/2014	68534	Urbis	Axia 16 LED 350mA	19 Watts	6.00 Metres	Galvanised Steel	
Y	5	STREET LIGHTING	HIGHLAND TARN	IMMINGHAM	517939.21	414147.98	2014	11/03/2014	68535	Urbis	Axia 16 LED 350mA	19 Watts	6.00 Metres	Galvanised Steel	
Y	6	STREET LIGHTING	HIGHLAND TARN	IMMINGHAM	517935.6	414104.82	2014	11/03/2014	68536	Urbis	Axia 16 LED 350mA	19 Watts	6.00 Metres	Galvanised Steel	
Y	7	STREET LIGHTING	HIGHLAND TARN	IMMINGHAM	517913.59	414084.6	2014	11/03/2014	68537	Urbis	Axia 16 LED 350mA	19 Watts	6.00 Metres	Galvanised Steel	
Y	8	STREET LIGHTING	HIGHLAND TARN	IMMINGHAM	517877.57	414079	2014	11/03/2014	68540	Urbis	Axia 16 LED 350mA	19 Watts	6.00 Metres	Galvanised Steel	
Y	9	STREET LIGHTING	HIGHLAND TARN	IMMINGHAM	517856.99	414062.31	2014	11/03/2014	68538	Urbis	Axia 16 LED 350mA	19 Watts	6.00 Metres	Galvanised Steel	
Y	10	STREET LIGHTING	HIGHLAND TARN	IMMINGHAM	517820.34	414075.91	2014	11/03/2014	68541	Urbis	Axia 16 LED 350mA	19 Watts	6.00 Metres	Galvanised Steel	
Y	11	STREET LIGHTING	HIGHLAND TARN	IMMINGHAM	517795.53	414082.32	2014	11/03/2014	68542	Urbis	Axia 16 LED 350mA	19 Watts	6.00 Metres	Galvanised Steel	
Y	12	STREET LIGHTING	HIGHLAND TARN	IMMINGHAM	517775.29	414100.61	2012		50780	Urbis	Axia 16 LED 350mA	19 Watts	6.00 Metres	Steel	
Y	13	STREET LIGHTING	HIGHLAND TARN	IMMINGHAM	517765.62	414134.73	2014	11/03/2014	68539	Urbis	Axia 16 LED 350mA	19 Watts	6.00 Metres	Galvanised Steel	
Y	1	STREET LIGHTING	HOLLINGSWORTH AVENUE	IMMINGHAM	517538.11	414877.84	2014	31/03/2014	50939	Urbis	Axia 16 LED 350mA	19 Watts	6.00 Metres	Steel	
Y	2	STREET LIGHTING	HOLLINGSWORTH AVENUE	IMMINGHAM	517575.5	414881.96	2014	31/03/2014	50940	Urbis	Axia 16 LED 350mA	19 Watts	6.00 Metres	Steel	
Y	3	STREET LIGHTING	HOLLINGSWORTH AVENUE	IMMINGHAM	517608.41	414900.5	2014	31/03/2014	50941	Urbis	Axia 16 LED 350mA	19 Watts	6.00 Metres	Steel	
Y	1	STREET LIGHTING	HOYLAKE DRIVE	IMMINGHAM	518550.21	415192.84	1983		51023	Urbis	Axia 16 LED 350mA	19 Watts	5.00 Metres	Galvanised Steel	
Y	2	STREET LIGHTING	HOYLAKE DRIVE	IMMINGHAM	518517.98	415208.15	1983		51024	Urbis	Axia 16 LED 350mA	19 Watts	5.00 Metres	Galvanised Steel	
Y	3	STREET LIGHTING	HOYLAKE DRIVE	IMMINGHAM	518497.73	415183.53	1983		51025	Urbis	Axia 16 LED 350mA	19 Watts	5.00 Metres	Galvanised Steel	
Y	4	STREET LIGHTING	HOYLAKE DRIVE	IMMINGHAM	518465.2	415166	1983		51026	Urbis	Axia 16 LED 350mA	19 Watts	5.00 Metres	Galvanised Steel	
Y	1	STREET LIGHTING	HUMBERVILLE ROAD	IMMINGHAM	519004.16	415153.36	1985		51185	1 Urbis LED	Axia 16 LED 500mA	28 Watts	6.00 Metres	Galvanised Steel	
Y	2	STREET LIGHTING	HUMBERVILLE ROAD	IMMINGHAM	518983.28	415133.05	1985		51186	1 Urbis LED	Axia 16 LED 500mA	28 Watts	6.00 Metres	Galvanised Steel	
Y	3	STREET LIGHTING	HUMBERVILLE ROAD	IMMINGHAM	518947.28	415113.51	2004		51187	1 Urbis LED	Axia 16 LED 500mA	28 Watts	6.00 Metres	Stainless Steel	
Y	4	STREET LIGHTING	HUMBERVILLE ROAD	IMMINGHAM	518937.58	415086.76	2005		51188	1 Urbis LED	Axia 16 LED 500mA	28 Watts	6.00 Metres	Stainless Steel	
Y	5	STREET LIGHTING	HUMBERVILLE ROAD	IMMINGHAM	518914.7	415064.25	2005		51189	1 Urbis LED	Axia 16 LED 500mA	28 Watts	6.00 Metres	Stainless Steel	
Y	6	STREET LIGHTING	HUMBERVILLE ROAD	IMMINGHAM	518884.38	415049.54	2005		51190	1 Urbis LED	Axia 16 LED 500mA	28 Watts	6.00 Metres	Stainless Steel	
Y	7	STREET LIGHTING	HUMBERVILLE ROAD	IMMINGHAM	518866.98	415019.23	2021	14/10/2021	68729	Urbis	Axia 24 LED 500mA	28 Watts	6.00 Metres	Galvanised Steel	
Y	8	STREET LIGHTING	HUMBERVILLE ROAD	IMMINGHAM	518830.88	414999.88	1985		51192	1 Urbis LED	Axia 16 LED 500mA	28 Watts	6.00 Metres	Galvanised Steel	
Y	9	STREET LIGHTING	HUMBERVILLE ROAD	IMMINGHAM	518812.14	414965.39	1985		51193	1 Urbis LED	Axia 16 LED 500mA	28 Watts	6.00 Metres	Galvanised Steel	
Y	10	STREET LIGHTING	HUMBERVILLE ROAD	IMMINGHAM	518783.66	414953.05		12/11/2014	51194	1 Urbis LED	Axia 16 LED 500mA	28 Watts	6.00 Metres	Galvanised Steel	
Y	1	STREET LIGHTING	JAMES WAY	IMMINGHAM	517765.43	414173.07	2014	31/03/2014	51421	1 Urbis LED	Axia 16 LED 500mA	28 Watts	6.00 Metres	Steel	
Y	1	STREET LIGHTING	JAPONICA HILL	IMMINGHAM	518168.09	414177.56	2014	31/03/2014	51427	Urbis	Axia 16 LED 350mA	19 Watts	6.00 Metres	Steel	
Y	2	STREET LIGHTING	JAPONICA HILL	IMMINGHAM	518191.88	414200.2	2014	31/03/2014	51428	Urbis	Axia 16 LED 350mA	19 Watts	6.00 Metres	Steel	
Y	1	STREET LIGHTING	JASMINE WAY	IMMINGHAM	518332	414094	2001		51429	Urbis	Axia 16 LED 350mA	19 Watts	6.00 Metres	Galvanised Steel	
Y	2	STREET LIGHTING	JASMINE WAY	IMMINGHAM	518295	414085	2001		51430	Urbis	Axia 16 LED 350mA	19 Watts	6.00 Metres	Galvanised Steel	
Y	3	STREET LIGHTING	JASMINE WAY	IMMINGHAM	518280	414064	2001		51431	Urbis	Axia 16 LED 350mA	19 Watts	6.00 Metres	Galvanised Steel	
Y	4	STREET LIGHTING	JASMINE WAY	IMMINGHAM	518253	414059	2001		51432	Urbis	Axia 16 LED 350mA	19 Watts	6.00 Metres	Galvanised Steel	
Y	5	STREET LIGHTING	JASMINE WAY	IMMINGHAM	518230	414077	2001		51433	Urbis	Axia 16 LED 350mA	19 Watts	6.00 Metres	Galvanised Steel	
Y	6	STREET LIGHTING	JASMINE WAY	IMMINGHAM	518230	414096	2001		51434	Urbis	Axia 16 LED 350mA	19 Watts	6.00 Metres	Galvanised Steel	
Y	7	STREET LIGHTING	JASMINE WAY	IMMINGHAM	518208	414100	2001		51435	Urbis	Axia 16 LED 350mA	19 Watts	6.00 Metres	Galvanised Steel	
Y	8	STREET LIGHTING	JASMINE WAY	IMMINGHAM	518191	414108	2001		51436	Urbis	Axia 16 LED 350mA	19 Watts	6.00 Metres	Galvanised Steel	
Y	9	STREET LIGHTING	JASMINE WAY	IMMINGHAM	518160	414088	2001		51437	Urbis	Axia 16 LED 350mA	19 Watts	6.00 Metres	Galvanised Steel	
Y	10	STREET LIGHTING	JASMINE WAY	IMMINGHAM	518140	414056	2001		51438	Urbis	Axia 16 LED 350mA	19 Watts	6.00 Metres	Galvanised Steel	
Y	11	STREET LIGHTING	JASMINE WAY	IMMINGHAM	518115	414037	2001		51439	Urbis	Axia 16 LED 350mA	19 Watts	6.00 Metres	Galvanised Steel	
Y	12	STREET LIGHTING	JASMINE WAY	IMMINGHAM	518083.41	414024.45	1983		51440	Urbis	Axia 16 LED 350mA	19 Watts	5.00 Metres	Galvanised Steel	
Y	1	STREET LIGHTING	KENDAL ROAD	IMMINGHAM	519127.86	414211.22	1998		51526	Urbis	Axia 16 LED 350mA	19 Watts	5.00 Metres	Galvanised Steel	
Y	2	STREET LIGHTING	KENDAL ROAD	IMMINGHAM	519136.6	414230.72	1998		51527	Urbis	Axia 16 LED 350mA	19 Watts	5.00 Metres	Galvanised Steel	
Y	3	STREET LIGHTING	KENDAL ROAD	IMMINGHAM	519177.48	414247.49	1998		51528	Urbis	Axia 16 LED 350mA	19 Watts	5.00 Metres	Galvanised Steel	

Y	1	STREET LIGHTING	KINLOCH WAY	IMMINGHAM	517817.49	414056.17	2014	20/05/2014	68543	Urbis	Axia 16 LED 350mA	19 Watts	6.00 Metres	Galvanised Steel	
Y	2	STREET LIGHTING	KINLOCH WAY	IMMINGHAM	517794.31	414024.28	2014	20/05/2014	68544	Urbis	Axia 16 LED 350mA	19 Watts	6.00 Metres	Galvanised Steel	
Y	3	STREET LIGHTING	KINLOCH WAY	IMMINGHAM	517801.57	413994.25	2014	20/05/2014	68545	Urbis	Axia 16 LED 350mA	19 Watts	6.00 Metres	Galvanised Steel	
Y	4	STREET LIGHTING	KINLOCH WAY	IMMINGHAM	517811.71	413956.93	2014	20/05/2014	68546	Urbis	Axia 16 LED 350mA	19 Watts	6.00 Metres	Galvanised Steel	
Y	5	STREET LIGHTING	KINLOCH WAY	IMMINGHAM	517810.87	413920.09	2014	20/05/2014	68547	Urbis	Axia 16 LED 350mA	19 Watts	6.00 Metres	Galvanised Steel	
Y	6	STREET LIGHTING	KINLOCH WAY	IMMINGHAM	517826.27	413896.85	2014	20/05/2014	68548	Urbis	Axia 16 LED 350mA	19 Watts	6.00 Metres	Galvanised Steel	
Y	1	STREET LIGHTING	KISHORN COURT	IMMINGHAM	517780.97	413982.61	2014	31/03/2014	51915	1 Urbis LED	Axia 16 LED 500mA	28 Watts	6.00 Metres	Steel	
Y	2	STREET LIGHTING	KISHORN COURT	IMMINGHAM	517771.73	414007.44	2014	31/03/2014	51916	1 Urbis LED	Axia 16 LED 500mA	28 Watts	6.00 Metres	Steel	
Y	3	STREET LIGHTING	KISHORN COURT	IMMINGHAM	517744.13	413976.6	2014	31/03/2014	51917	1 Urbis LED	Axia 16 LED 500mA	28 Watts	6.00 Metres	Steel	
Y	4	STREET LIGHTING	KISHORN COURT	IMMINGHAM	517726.03	414001.6	2014	31/03/2014	51918	1 Urbis LED	Axia 16 LED 500mA	28 Watts	6.00 Metres	Steel	
Y	5	STREET LIGHTING	KISHORN COURT	IMMINGHAM	517718.44	414035.91	2014	31/03/2014	51919	1 Urbis LED	Axia 16 LED 500mA	28 Watts	6.00 Metres	Steel	
Y	1	STREET LIGHTING	LANSDOWN ROAD	IMMINGHAM	517579.31	414805.9	2014	31/03/2014	52290	Urbis	Axia 16 LED 350mA	19 Watts	6.00 Metres	Steel	
Y	2	STREET LIGHTING	LANSDOWN ROAD	IMMINGHAM	517598	414799	2001		52291	Urbis	Axia 16 LED 350mA	19 Watts	6.00 Metres	Galvanised Steel	
Y	3	STREET LIGHTING	LANSDOWN ROAD	IMMINGHAM	517626	414803	2001		52292	Urbis	Axia 16 LED 350mA	19 Watts	6.00 Metres	Galvanised Steel	
Y	4	STREET LIGHTING	LANSDOWN ROAD	IMMINGHAM	517641.08	414820.26	2014	31/03/2014	52293	Urbis	Axia 16 LED 350mA	19 Watts	6.00 Metres	Steel	
Y	5	STREET LIGHTING	LANSDOWN ROAD	IMMINGHAM	517671.51	414822.01	2007		52294	Urbis	Axia 16 LED 350mA	19 Watts	6.00 Metres	Steel	
Y	6	STREET LIGHTING	LANSDOWN ROAD	IMMINGHAM			2020	01/12/2020	68195	Urbis	Axia 16 LED 350mA	19 Watts	6.00 Metres	Galvanised Steel	
Y	1	STREET LIGHTING	LARCH CLOSE	IMMINGHAM	519122.22	415154.76	2009		52338	Urbis	Axia 16 LED 350mA	19 Watts	6.00 Metres	Steel	
Y	2	STREET LIGHTING	LARCH CLOSE	IMMINGHAM	519109.17	415173.44	2009		52339	Urbis	Axia 16 LED 350mA	19 Watts	6.00 Metres	Steel	
Y	3	STREET LIGHTING	LARCH CLOSE	IMMINGHAM	519093.12	415164.83	2009		52340	Urbis	Axia 16 LED 350mA	19 Watts	6.00 Metres	Steel	
Y	1	STREET LIGHTING	LEYDEN CLOSE	IMMINGHAM	517829.27	414737.35	2014	11/03/2014	68549	Urbis	Axia 16 LED 350mA	19 Watts	6.00 Metres	Galvanised Steel	
Y	2	STREET LIGHTING	LEYDEN CLOSE	IMMINGHAM	517820.5	414762.57	2014	11/03/2014	68550	Urbis	Axia 16 LED 350mA	19 Watts	6.00 Metres	Galvanised Steel	
Y	3	STREET LIGHTING	LEYDEN CLOSE	IMMINGHAM	517843.57	414784.41	2014	11/03/2014	68551	Urbis	Axia 16 LED 350mA	19 Watts	6.00 Metres	Galvanised Steel	
Y	4	STREET LIGHTING	LEYDEN CLOSE	IMMINGHAM	517866.49	414797.79	2014	11/03/2014	68552	Urbis	Axia 16 LED 350mA	19 Watts	6.00 Metres	Galvanised Steel	
Y	1	STREET LIGHTING	LINDUM AVENUE	IMMINGHAM	517744.56	414289.07	1987		52589	1 Urbis LED	Axia 16 LED 500mA	28 Watts	6.00 Metres	Galvanised Steel	
Y	1	STREET LIGHTING	LUNDY COURT	IMMINGHAM	518407.1	413712.8	1988		53002	Urbis	Axia 16 LED 350mA	19 Watts	5.00 Metres	Galvanised Steel	
Y	2	STREET LIGHTING	LUNDY COURT	IMMINGHAM	518402.67	413681.15	1988		53003	Urbis	Axia 16 LED 350mA	19 Watts	5.00 Metres	Galvanised Steel	
Y	3	STREET LIGHTING	LUNDY COURT	IMMINGHAM	518384.19	413663.24	1988		53004	Urbis	Axia 16 LED 350mA	19 Watts	5.00 Metres	Galvanised Steel	
Y	1	STREET LIGHTING	LYDFORD ROAD	IMMINGHAM	518817.49	414360.67	1998		53005	Urbis	Axia 16 LED 350mA	19 Watts	5.00 Metres	Galvanised Steel	
Y	2	STREET LIGHTING	LYDFORD ROAD	IMMINGHAM	518797.44	414346.83	1998		53006	Urbis	Axia 16 LED 350mA	19 Watts	5.00 Metres	Galvanised Steel	
Y	3	STREET LIGHTING	LYDFORD ROAD	IMMINGHAM	518773.52	414337.91	1998		53007	Urbis	Axia 16 LED 350mA	19 Watts	5.00 Metres	Galvanised Steel	
Y	4	STREET LIGHTING	LYDFORD ROAD	IMMINGHAM	518745.67	414322.91	1998		53008	Urbis	Axia 16 LED 350mA	19 Watts	5.00 Metres	Galvanised Steel	
Y	1	STREET LIGHTING	MCKENZIE PLACE	IMMINGHAM	517694.67	414190.6	2014	31/03/2014	53467	Urbis	Axia 16 LED 350mA	19 Watts	6.00 Metres	Steel	
Y	2	STREET LIGHTING	MCKENZIE PLACE	IMMINGHAM	517688.81	414226.14	2014	31/03/2014	53468	Urbis	Axia 16 LED 350mA	19 Watts	6.00 Metres	Steel	
Y	1	STREET LIGHTING	MARGARET STREET	IMMINGHAM	518134.02	414528.15	2017		53258	1 Urbis LED	Teceo 24 LED 500mA	40 Watts	6.00 Metres	Galvanised Steel	
Y	2	STREET LIGHTING	MARGARET STREET	IMMINGHAM	518150.95	414495.14	1988		53259	1 Urbis LED	Teceo 24 LED 500mA	40 Watts	6.00 Metres	Galvanised Steel	
Y	3	STREET LIGHTING	MARGARET STREET	IMMINGHAM	518165.88	414463.56	1988		53260	1 Urbis LED	Teceo 24 LED 500mA	40 Watts	6.00 Metres	Galvanised Steel	
Y	4	STREET LIGHTING	MARGARET STREET	IMMINGHAM	518179.81	414434.64	1988		53261	1 Urbis LED	Teceo 24 LED 500mA	40 Watts	6.00 Metres	Galvanised Steel	
Y	5	STREET LIGHTING	MARGARET STREET	IMMINGHAM	518194.36	414404.14	1988		53262	1 Urbis LED	Teceo 24 LED 500mA	40 Watts	6.00 Metres	Galvanised Steel	
Y	6	STREET LIGHTING	MARGARET STREET	IMMINGHAM	518217.53	414381.29	1988		53263	1 Urbis LED	Teceo 24 LED 500mA	40 Watts	6.00 Metres	Galvanised Steel	
Y	7	STREET LIGHTING	MARGARET STREET	IMMINGHAM	518220.19	414349.77	1988		53264	1 Urbis LED	Teceo 24 LED 500mA	40 Watts	6.00 Metres	Galvanised Steel	
Y	8	STREET LIGHTING	MARGARET STREET	IMMINGHAM	518243.1	414327.43	1988		53265	1 Urbis LED	Teceo 24 LED 500mA	40 Watts	6.00 Metres	Galvanised Steel	
Y	9	STREET LIGHTING	MARGARET STREET	IMMINGHAM	518248.16	414291.1	1988		53266	1 Urbis LED	Teceo 24 LED 500mA	40 Watts	6.00 Metres	Galvanised Steel	
Y	10	STREET LIGHTING	MARGARET STREET	IMMINGHAM	518272.34	414265.73	1988		53267	1 Urbis LED	Teceo 24 LED 500mA	40 Watts	6.00 Metres	Galvanised Steel	
Y	11	STREET LIGHTING	MARGARET STREET	IMMINGHAM	518278.92	414226.04	1988		53268	1 Urbis LED	Teceo 24 LED 500mA	40 Watts	6.00 Metres	Galvanised Steel	
Y	12	STREET LIGHTING	MARGARET STREET	IMMINGHAM	518303.98	414200.16	1988		53269	1 Urbis LED	Teceo 24 LED 500mA	40 Watts	6.00 Metres	Galvanised Steel	
Y	13	STREET LIGHTING	MARGARET STREET	IMMINGHAM	518312.03	414156.97	2019	24/01/2019	67276	Urbis	Teceo 24 LED 500mA	40 Watts	6.00 Metres	Galvanised Steel	
Y	14	STREET LIGHTING	MARGARET STREET	IMMINGHAM	518321.96	414137.57	1995		53271	1 Urbis LED	Teceo 24 LED 500mA	40 Watts	6.00 Metres	Galvanised Steel	
Y	15	STREET LIGHTING	MARGARET STREET	IMMINGHAM	518342.84	414117.76	2022	01/12/2022	69120	Urbis	Teceo 24 LED 500mA	40 Watts	6.00 Metres	Galvanised Steel	
Y	16	STREET LIGHTING	MARGARET STREET	IMMINGHAM	518343.48	414088.86	1995		53273	1 Urbis LED	Teceo 24 LED 500mA	40 Watts	6.00 Metres	Galvanised Steel	
Y	17	STREET LIGHTING	MARGARET STREET	IMMINGHAM	518355.76	414063.35	1995		53274	1 Urbis LED	Teceo 24 LED 500mA	40 Watts	6.00 Metres	Galvanised Steel	
Y	18	STREET LIGHTING	MARGARET STREET	IMMINGHAM	518376.03	414046.04	2019	08/10/2019	67659	Urbis	Teceo 24 LED 500mA	40 Watts	6.00 Metres	Galvanised Steel	
Y	19	STREET LIGHTING	MARGARET STREET	IMMINGHAM	518386.64	414024.43	1995		53276	1 Urbis LED	Teceo 24 LED 500mA	40 Watts	6.00 Metres	Galvanised Steel	
Y	20	STREET LIGHTING	MARGARET STREET	IMMINGHAM	518391.58	413999.43	2001		53277	1 Urbis LED	Teceo 24 LED 500mA	40 Watts	6.00 Metres	Galvanised Steel	
Y	21	STREET LIGHTING	MARGARET STREET	IMMINGHAM	518394.56	413971.38	1995		53278	1 Urbis LED	Teceo 24 LED 500mA	40 Watts	6.00 Metres	Galvanised Steel	
Y	22	STREET LIGHTING	MARGARET STREET	IMMINGHAM	518398.99	413947.46	2012		53279	1 Urbis LED	Teceo 24 LED 500mA	40 Watts	6.00 Metres	Steel	
Y	23	STREET LIGHTING	MARGARET STREET	IMMINGHAM	518391.39	413914.48	1988		53280	1 Urbis LED	Teceo 24 LED 500mA	40 Watts	6.00 Metres	Galvanised Steel	
Y	24	STREET LIGHTING	MARGARET STREET	IMMINGHAM	518397.22	413877.71	1999		53281	1 Urbis LED	Teceo 24 LED 500mA	40 Watts	6.00 Metres	Galvanised Steel	
Y	25	STREET LIGHTING	MARGARET STREET	IMMINGHAM	518412.03	413857.78	2012		53282	1 Urbis LED	Teceo 24 LED 500mA	40 Watts	6.00 Metres	Steel	
Y	26	STREET LIGHTING	MARGARET STREET	IMMINGHAM	518415.38	413825.1	2012		53283	1 Urbis LED	Teceo 24 LED 500mA	40 Watts	6.00 Metres	Steel	
Y	27	STREET LIGHTING	MARGARET STREET	IMMINGHAM	518437.98	413794.21	2006		53284	1 Urbis LED	Teceo 24 LED 500mA	40 Watts	6.00 Metres	Stainless Steel	
Y	28	STREET LIGHTING	MARGARET STREET	IMMINGHAM	518461.06	413769.98	2012		53285	1 Urbis LED	Teceo 24 LED 500mA	40 Watts	6.00 Metres	Steel	
Y	29	STREET LIGHTING	MARGARET STREET	IMMINGHAM	518493.98	413744.96	2012		53286	1 Urbis LED	Teceo 24 LED 500mA	40 Watts	6.00 Metres	Steel	
Y	1	STREET LIGHTING	MAYFLOWER AVENUE	IMMINGHAM	518317.84	414461.11	1986		53461	Urbis	Axia 16 LED 350mA	19 Watts	5.00 Metres	Galvanised Steel	
Y	2	STREET LIGHTING	MAYFLOWER AVENUE	IMMINGHAM	518283.42	414434.66	1986		53462	Urbis	Axia 16 LED 350mA	19 Watts	5.00 Metres	Galvanised Steel	
Y	3	STREET LIGHTING	MAYFLOWER AVENUE	IMMINGHAM	518253.92	414429.15	1986		53463	Urbis	Axia 16 LED 350mA	19 Watts	5.00 Metres	Galvanised Steel	
Y	1	STREET LIGHTING	MILL LANE	HABROUGH	517473.13	414994.93	2008		53625	Urbis	Axia 16 LED 350mA	19 Watts	6.00 Metres	Steel	
Y	2	STREET LIGHTING	MILL LANE	HABROUGH	517447.3	414990.5	2008		53626	Urbis	Axia 16 LED 350mA	19 Watts	6.00 Metres	Steel	
Y	3	STREET LIGHTING	MILL LANE	HABROUGH	517424.6	414982.6	2008		53627	Urbis	Axia 16 LED 350mA	19 Watts	6.00 Metres	Steel	
Y	4	STREET LIGHTING	MILL LANE	HABROUGH	517400.2	414974.5	2008		53628	Urbis	Axia 16 LED 350mA	19 Watts	6.00 Metres	Steel	
Y	1	STREET LIGHTING	MUIRFIELD CROFT	IMMINGHAM	518576.9	414950.19	1990		53899	Urbis	Axia 16 LED 350mA	19 Watts	5.00 Metres	Galvanised Steel	
Y	2	STREET LIGHTING	MUIRFIELD CROFT	IMMINGHAM	518560.07	414925.7	2009		53900	Urbis	Axia 16 LED 350mA	19 Watts	5.00 Metres	Galvanised Steel	
Y	3	STREET LIGHTING	MUIRFIELD CROFT	IMMINGHAM	518532.81	414913.95	1997		53901	Urbis	Axia 16 LED 350mA	19 Watts	5.00 Metres	Galvanised Steel	
Y	4	STREET LIGHTING	MUIRFIELD CROFT	IMMINGHAM	518526.65	414889.69	1997		53902	Urbis	Axia 16 LED 350mA	19 Watts	5.00 Metres	Galvanised Steel	
Y	5	STREET LIGHTING	MUIRFIELD CROFT	IMMINGHAM	518517.92	414867.35	1997		53903	Urbis	Axia 16 LED 350mA	19 Watts	5.00 Metres	Galvanised Steel	
Y	6	STREET LIGHTING	MUIRFIELD CROFT	IMMINGHAM	518501.46	414855.51	1997		53904	Urbis	Axia 16 LED 350mA	19 Watts	5.00 Metres	Galvanised Steel	
Y	7	STREET LIGHTING	MUIRFIELD CROFT	IMMINGHAM	518484.63	414856.84	1997		53905	Urbis	Axia 16 LED 350mA	19 Watts	5.00 Metres	Galvanised Steel	
Y	1	STREET LIGHTING	OAKLANDS ROAD	IMMINGHAM	518215.42	415035.08	2014	31/03/2014	54323	1 Urbis LED	Axia 16 LED 500mA	28 Watts	6.00 Metres	Steel	
Y	2	STREET LIGHTING	OAKLANDS ROAD	IMMINGHAM	518244.54	415062.68	2014	31/03/2014	54324	1 Urbis LED	Axia 16 LED 500mA	28 Watts	6.00 Metres	Steel	
Y	3	STREET LIGHTING	OAKLANDS ROAD	IMMINGHAM	518268.46	415096.03	2014	31/03/2014	54325	1 Urbis LED	Axia 16 LED 500mA	28 Watts	6.00 Metres	Steel	
Y	1	STREET LIGHTING	OBAN COURT	IMMINGHAM	517904.75	414071.41	2014	31/03/2014	54343	Urbis	Axia 16 LED 350mA	19 Watts	6.00 Metres	Steel	
Y	2	STREET LIGHTING	OBAN COURT	IMMINGHAM	517920.7	414040.15	2014	31/03/2014	54344	Urbis	Axia 16 LED 350mA	19 Watts	6.00 Metres	Steel	
Y	3	STREET LIGHTING	OBAN COURT	IMMINGHAM	517939.62	414015.56	2020	14/02/2020	67816	Urbis	Axia 16 LED 350mA	19 Watts	6.00 Metres	Galvanised Steel	
Y	4	STREET LIGHTING	OBAN COURT	IMMINGHAM	517955.89	413989.39	1978		54346	Urbis	Axia 16 LED 350mA	19 Watts	5.00 Metres	Galvanised Steel	
Y	5	STREET LIGHTING	OBAN COURT	IMMINGHAM	517984.37	413979.39	1978		54347	Urbis	Axia 16 LED 350mA	19 Watts	5.00 Metres	Galvanised Steel	
Y	6	STREET LIGHTING	OBAN COURT	IMMINGHAM	518011.08	413989.45	1978		54348	Urbis	Axia 16 LED 350mA	19 Watts	5.00 Metres	Galvanised Steel	
Y	7	STREET LIGHTING	OBAN COURT	IMMINGHAM	518037.28	414018.76	1978		54349	Urbis	Axia 16 LED 350mA	19 Watts	5.00 Metres	Galvanised Steel	
Y	1	STREET LIGHTING	PAMELA ROAD	IMMINGHAM	518790.5	414828.5	1991		54585	Urbis	Axia 16 LED 350mA	19 Watts	6.00 Metres	Galvanised Steel	
Y	2	STREET LIGHTING	PAMELA ROAD	IMMINGHAM	518765.31	414812.49	1991		54586	Urbis	Axia 16 LED 350mA	19 Watts	6.00 Metres	Galvanised Steel	
Y	3	STREET LIGHTING	PAMELA ROAD	IMMINGHAM	518739.36	414804.96	1991		54587	Urbis	Axia 16 LED 350mA	19 Watts	6.00 Metres	Galvanised Steel	
Y	4	STREET LIGHTING	PAMELA ROAD	IMMINGHAM	518731.85	414790.78	1991		54588	Urbis	Axia 16 LED 350mA	19 Watts	6.00 Metres	Galvanised Steel	
Y	5	STREET LIGHTING	PAMELA ROAD	IMMINGHAM	518751.47	414773.76	1991		54589	Urbis	Axia 16 LED 350mA	19 Watts	6.00 Metres	Galvanised Steel	
Y	6	STREET LIGHTING	PAMELA ROAD	IMMINGHAM	518764.5	414752.94	1991		54590	Urbis	Axia 16 LED 350mA	19 Watts	6.00 Metres	Galvanised Steel	
Y	7	STREET LIGHTING	PAMELA ROAD	IMMINGHAM	518774.88	414730.09	1991		54591	Urbis	Axia 16 LED 350mA	19 Watts	6.00 Metres	Galvanised Steel	
Y	8	STREET LIGHTING	PAMELA ROAD	IMMINGHAM	518752.48	414716.11	1991		54592	Urbis	Axia 16 LED 350mA	19 Watts	6.00 Metres	Galvanised Steel	
Y	9	STREET LIGHTING	PAMELA ROAD	IMMINGHAM	518739.32	414695.41	1991		54593	Urbis	Axia 16 LED 350mA	19 Watts	6.00 Metres	Galvanised Steel	
Y	10	STREET LIGHTING	PAMELA ROAD	IMMINGHAM	518715.39	414687.88	1991		54594	Urbis	Axia 16 LED 350mA	19 Watts	6.00 Metres	Galvanised Steel	
Y	11	STREET LIGHTING	PAMELA ROAD	IMMINGHAM	518702.23	414666.74	1991		54595	Urbis	Axia 16 LED 350mA	19 Watts	6.00 Metres	Galvanised Steel	
Y	12	STREET LIGHTING	PAMELA ROAD	IMMINGHAM	518687.8	414650.29	1991		54596	Urbis	Axia 16 LED 350mA	19 Watts	6.00 Metres	Galvanised Steel	
Y	13	STREET LIGHTING	PAMELA ROAD	IMMINGHAM	518678.08	414627.91	1991		54597	Urbis	Axia 16 LED 350mA	19 Watts	6.00 Metres	Galvanised Steel	
Y	14	STREET LIGHTING	PAMELA ROAD	IMMINGHAM	518691.45	414609.05	2019	27/06/2019	67502	Urbis	Axia 16 LED 350mA	19 Watts	6.00 Metres	Galvanised Steel	
Y	15	STREET LIGHTING	PAMELA ROAD	IMMINGHAM	518710.11	414593.99	1991		54599	Urbis	Axia 16 LED 350mA	19 Watts	6.00 Metres	Galvanised Steel	
Y	16	STREET LIGHTING	PAMELA ROAD	IMMINGHAM	518719.35	414568.94	1991		54600	Urbis	Axia 16 LED 350mA	19 Watts	6.00 Metres	Galvanised Steel	
Y	17	STREET LIGHTING	PAMELA ROAD	IMMINGHAM	518745.17	414556.34	1991		54601	Urbis	Axia 16 LED 350mA	19 Watts	6.00 Metres	Galvanised Steel	
Y	18	STREET LIGHTING	PAMELA ROAD	IMMINGHAM	518766.47	414558.74	1991		54602	Urbis	Axia 16 LED 350mA	19 Watts	6.00 Metres	Galvanised Steel	
Y	19	STREET LIGHTING	PAMELA ROAD	IMMINGHAM	518791.02	414579.05	1991		54603	Urbis	Axia 16 LED 350mA	19 Watts	6.00 Metres	Galvanised Steel	
Y	1	STREET LIGHTING	PARK CLOSE	IMMINGHAM	518206.48	414962.54	2009		54616	1 Urbis LED	Teceo 24 LED 500mA	40 Watts	6.00 Metres	Steel	
Y	2	STREET LIGHTING	PARK CLOSE	IMMINGHAM	518179.54	414942.77	2009		54617	1 Urbis LED	Teceo 24 LED 500mA	40 Watts	6.00 Metres	Steel	
Y	3	STREET LIGHTING	PARK CLOSE	IMMINGHAM	518153.98	414922.91	2009		54618	1 Urbis LED	Teceo 24 LED 500mA	40 Watts	6.00 Metres	Steel	
Y	4	STREET LIGHTING	PARK CLOSE	IMMINGHAM	518131.36	414905.21	2009		54619	1 Urbis LED	Teceo 24 LED 500mA	40 Watts	6.00 Metres	Steel	

Y	5	STREET LIGHTING	PARK CLOSE	IMMINGHAM	518109.91	414888.32	2009		54620	Urbis	Axia 8 LED 350mA	10 Watts	6.00 Metres	Steel	
Y	1	STREET LIGHTING	PELHAM ROAD	IMMINGHAM	519183.61	415259.41	1991		55175	1 Urbis LED	Teceo 48 LED 700mA	104 Watts	10.00 Metres	Galvanised Steel	
Y	2	STREET LIGHTING	PELHAM ROAD	IMMINGHAM	519149.56	415255.3	1991		55176	1 Urbis LED	Teceo 48 LED 700mA	104 Watts	10.00 Metres	Galvanised Steel	
Y	3	STREET LIGHTING	PELHAM ROAD	IMMINGHAM	519124.37	415238.53	1991		55177	1 Urbis LED	Teceo 48 LED 700mA	104 Watts	10.00 Metres	Galvanised Steel	
Y	4	STREET LIGHTING	PELHAM ROAD	IMMINGHAM	519100.58	415212.33	1991		55178	1 Urbis LED	Teceo 48 LED 700mA	104 Watts	10.00 Metres	Galvanised Steel	
Y	5	STREET LIGHTING	PELHAM ROAD	IMMINGHAM	519071.97	415191.57	1991		55179	1 Urbis LED	Teceo 48 LED 700mA	104 Watts	10.00 Metres	Galvanised Steel	
Y	6	STREET LIGHTING	PELHAM ROAD	IMMINGHAM	519038.93	415177.33	1991		55180	1 Urbis LED	Teceo 48 LED 700mA	104 Watts	10.00 Metres	Galvanised Steel	
Y	7	STREET LIGHTING	PELHAM ROAD	IMMINGHAM	519017.62	415184.36	2020	01/12/2020	68191	Urbis	Teceo 48 LED 700mA	104 Watts	10.00 Metres	Galvanised Steel	
Y	8	STREET LIGHTING	PELHAM ROAD	IMMINGHAM	519001.09	415168.41	1991		55182	1 Urbis LED	Teceo 48 LED 700mA	104 Watts	10.00 Metres	Galvanised Steel	
Y	9	STREET LIGHTING	PELHAM ROAD	IMMINGHAM	518972.23	415174.3	1991		55183	1 Urbis LED	Teceo 48 LED 700mA	104 Watts	10.00 Metres	Galvanised Steel	
Y	10	STREET LIGHTING	PELHAM ROAD	IMMINGHAM	518946.22	415180.67	2020	01/12/2020	68192	Urbis	Teceo 48 LED 700mA	104 Watts	10.00 Metres	Galvanised Steel	
Y	11	STREET LIGHTING	PELHAM ROAD	IMMINGHAM	518910.71	415180.69	1991		55185	1 Urbis LED	Teceo 48 LED 700mA	104 Watts	10.00 Metres	Galvanised Steel	
Y	12	STREET LIGHTING	PELHAM ROAD	IMMINGHAM	518878.44	415188.48	2023	06/06/2023	69227	Urbis	Teceo 48 LED 700mA	104 Watts	12.00 Metres	Galvanised Steel	
Y	13	STREET LIGHTING	PELHAM ROAD	IMMINGHAM	518857.68	415182.72	1991		55187	1 Urbis LED	Teceo 48 LED 700mA	104 Watts	10.00 Metres	Galvanised Steel	
Y	14	STREET LIGHTING	PELHAM ROAD	IMMINGHAM	518841.98	415167.78	1991		55188	1 Urbis LED	Teceo 48 LED 700mA	104 Watts	10.00 Metres	Galvanised Steel	
Y	15	STREET LIGHTING	PELHAM ROAD	IMMINGHAM	518819.58	415136.1	1991		55189	1 Urbis LED	Teceo 48 LED 700mA	104 Watts	10.00 Metres	Galvanised Steel	
Y	16	STREET LIGHTING	PELHAM ROAD	IMMINGHAM	518806.36	415101.54	1991		55190	1 Urbis LED	Teceo 48 LED 700mA	104 Watts	10.00 Metres	Galvanised Steel	
Y	17	STREET LIGHTING	PELHAM ROAD	IMMINGHAM	518787.58	415091.65	1991		55191	1 Urbis LED	Teceo 48 LED 700mA	104 Watts	10.00 Metres	Galvanised Steel	
Y	18	STREET LIGHTING	PELHAM ROAD	IMMINGHAM	518764.5	415060.76	1991		55192	1 Urbis LED	Teceo 48 LED 700mA	104 Watts	10.00 Metres	Galvanised Steel	
Y	19	STREET LIGHTING	PELHAM ROAD	IMMINGHAM	518747.08	415036.16	1991		55193	1 Urbis LED	Teceo 48 LED 700mA	104 Watts	10.00 Metres	Galvanised Steel	
Y	20	STREET LIGHTING	PELHAM ROAD	IMMINGHAM	518729.05	415011.55	1991		55194	1 Urbis LED	Teceo 48 LED 700mA	104 Watts	10.00 Metres	Galvanised Steel	
Y	21	STREET LIGHTING	PELHAM ROAD	IMMINGHAM	518708.37	414982.59	1991		55195	1 Urbis LED	Teceo 48 LED 700mA	104 Watts	10.00 Metres	Galvanised Steel	
Y	22	STREET LIGHTING	PELHAM ROAD	IMMINGHAM	518692.8	414961.52	1991		55196	1 Urbis LED	Teceo 48 LED 700mA	104 Watts	10.00 Metres	Galvanised Steel	
Y	23	STREET LIGHTING	PELHAM ROAD	IMMINGHAM	518676.1	414937.4	1991		55197	1 Urbis LED	Teceo 48 LED 700mA	104 Watts	10.00 Metres	Galvanised Steel	
Y	24	STREET LIGHTING	PELHAM ROAD	IMMINGHAM	518669.14	414910.7	1991		55198	1 Urbis LED	Teceo 48 LED 700mA	104 Watts	10.00 Metres	Galvanised Steel	
Y	25	STREET LIGHTING	PELHAM ROAD	IMMINGHAM	518640.25	414889.62	1991		55199	1 Urbis LED	Teceo 48 LED 700mA	104 Watts	10.00 Metres	Galvanised Steel	
Y	26	STREET LIGHTING	PELHAM ROAD	IMMINGHAM	518623.24	414852.46	1991		55200	1 Urbis LED	Teceo 48 LED 700mA	104 Watts	10.00 Metres	Galvanised Steel	
Y	27	STREET LIGHTING	PELHAM ROAD	IMMINGHAM	518594.89	414838.79	1991		55201	1 Urbis LED	Teceo 48 LED 700mA	104 Watts	10.00 Metres	Galvanised Steel	
Y	28	STREET LIGHTING	PELHAM ROAD	IMMINGHAM	518581.11	414809.12	1991		55202	1 Urbis LED	Teceo 48 LED 700mA	104 Watts	10.00 Metres	Galvanised Steel	
Y	29	STREET LIGHTING	PELHAM ROAD	IMMINGHAM	518551.75	414798.29	1991		55203	1 Urbis LED	Teceo 48 LED 700mA	104 Watts	10.00 Metres	Galvanised Steel	
Y	30	STREET LIGHTING	PELHAM ROAD	IMMINGHAM	518526.43	414766.19	1991		55204	1 Urbis LED	Teceo 48 LED 700mA	104 Watts	10.00 Metres	Galvanised Steel	
Y	31	STREET LIGHTING	PELHAM ROAD	IMMINGHAM	518490.23	414754.94	2014		66386	1 Urbis LED	Teceo 48 LED 500mA	79 Watts	10.00 Metres	Steel	
Y	32	STREET LIGHTING	PELHAM ROAD	IMMINGHAM	518467.08	414728.18	2014		66387	1 Urbis LED	Teceo 48 LED 500mA	79 Watts	10.00 Metres	Steel	
Y	33	STREET LIGHTING	PELHAM ROAD	IMMINGHAM	518436.58	414733.87	2014		66388	1 Urbis LED	Teceo 48 LED 500mA	79 Watts	10.00 Metres	Steel	
Y	34	STREET LIGHTING	PELHAM ROAD	IMMINGHAM	518419.81	414704.37	2014		66389	1 Urbis LED	Teceo 48 LED 500mA	79 Watts	10.00 Metres	Steel	
Y	35	STREET LIGHTING	PELHAM ROAD	IMMINGHAM	518396.04	414714.67	2014		66390	1 Urbis LED	Teceo 48 LED 500mA	79 Watts	10.00 Metres	Steel	
Y	36	STREET LIGHTING	PELHAM ROAD	IMMINGHAM	518371.87	414695.94	2014		66391	1 Urbis LED	Teceo 48 LED 500mA	79 Watts	10.00 Metres	Steel	
Y	37	STREET LIGHTING	PELHAM ROAD	IMMINGHAM	518356.84	414670.04	2014		66392	1 Urbis LED	Teceo 48 LED 500mA	79 Watts	10.00 Metres	Steel	
Y	38	STREET LIGHTING	PELHAM ROAD	IMMINGHAM	518329	414654	2008		55214	1 Urbis LED	Teceo 48 LED 700mA	104 Watts	10.00 Metres	Galvanised Steel	
Y	39	STREET LIGHTING	PELHAM ROAD	IMMINGHAM	518311	414643	2008		55215	1 Urbis LED	Teceo 48 LED 700mA	104 Watts	10.00 Metres	Galvanised Steel	
Y	40	STREET LIGHTING	PELHAM ROAD	IMMINGHAM	518291	414631	2008		55216	1 Urbis LED	Teceo 48 LED 700mA	104 Watts	10.00 Metres	Galvanised Steel	
Y	41	STREET LIGHTING	PELHAM ROAD	IMMINGHAM	518273.9	414636.03	1991		55217	1 Urbis LED	Teceo 48 LED 700mA	104 Watts	10.00 Metres	Galvanised Steel	
Y	42	STREET LIGHTING	PELHAM ROAD	IMMINGHAM	518261.25	414616.43	1991		55218	1 Urbis LED	Teceo 48 LED 700mA	104 Watts	10.00 Metres	Galvanised Steel	
Y	43	STREET LIGHTING	PELHAM ROAD	IMMINGHAM	518222.01	414597.17	1991		55219	1 Urbis LED	Teceo 48 LED 700mA	104 Watts	10.00 Metres	Galvanised Steel	
Y	44	STREET LIGHTING	PELHAM ROAD	IMMINGHAM	518181.43	414586.18	1991		55220	1 Urbis LED	Teceo 48 LED 700mA	104 Watts	10.00 Metres	Galvanised Steel	
Y	45	STREET LIGHTING	PELHAM ROAD	IMMINGHAM	518156.92	414559.15	1991		55221	1 Urbis LED	Teceo 48 LED 700mA	104 Watts	10.00 Metres	Galvanised Steel	
Y	46	STREET LIGHTING	PELHAM ROAD	IMMINGHAM	518124.31	414554.79	1991		55222	1 Urbis LED	Teceo 48 LED 700mA	104 Watts	10.00 Metres	Galvanised Steel	
Y	47	STREET LIGHTING	PELHAM ROAD	IMMINGHAM	518117.63	414539.5	1991		55223	1 Urbis LED	Teceo 48 LED 700mA	104 Watts	10.00 Metres	Galvanised Steel	
Y	48	STREET LIGHTING	PELHAM ROAD	IMMINGHAM	518070.65	414525.83	2017		55224	1 Urbis LED	Teceo 48 LED 700mA	104 Watts	10.00 Metres	Galvanised Steel	
Y	49	STREET LIGHTING	PELHAM ROAD	IMMINGHAM	518050.19	414503.45	1991		55225	1 Urbis LED	Teceo 48 LED 700mA	104 Watts	10.00 Metres	Galvanised Steel	
Y	50	STREET LIGHTING	PELHAM ROAD	IMMINGHAM	518022.04	414487.35	1991		55226	1 Urbis LED	Teceo 48 LED 700mA	104 Watts	10.00 Metres	Galvanised Steel	
Y	51	STREET LIGHTING	PELHAM ROAD	IMMINGHAM	517988.42	414479.9	1991		55227	1 Urbis LED	Teceo 48 LED 700mA	104 Watts	10.00 Metres	Galvanised Steel	
Y	52	STREET LIGHTING	PELHAM ROAD	IMMINGHAM	517972.55	414458.84	1991		55228	1 Urbis LED	Teceo 48 LED 700mA	104 Watts	10.00 Metres	Galvanised Steel	
Y	53	STREET LIGHTING	PELHAM ROAD	IMMINGHAM	517945.21	414442.74	1991		55229	1 Urbis LED	Teceo 48 LED 700mA	104 Watts	10.00 Metres	Galvanised Steel	
Y	54	STREET LIGHTING	PELHAM ROAD	IMMINGHAM	517913.82	414436.76	1991		55230	1 Urbis LED	Teceo 48 LED 700mA	104 Watts	10.00 Metres	Galvanised Steel	
Y	55	STREET LIGHTING	PELHAM ROAD	IMMINGHAM	517895.49	414413.51	1991		55231	1 Urbis LED	Teceo 48 LED 700mA	104 Watts	10.00 Metres	Galvanised Steel	
Y	56	STREET LIGHTING	PELHAM ROAD	IMMINGHAM	517864.99	414415.22	1991		55232	1 Urbis LED	Teceo 48 LED 700mA	104 Watts	10.00 Metres	Galvanised Steel	
Y	57	STREET LIGHTING	PELHAM ROAD	IMMINGHAM	517856.89	414392.18	1991		55233	1 Urbis LED	Teceo 48 LED 700mA	104 Watts	10.00 Metres	Galvanised Steel	
Y	58	STREET LIGHTING	PELHAM ROAD	IMMINGHAM	517829.93	414402.88	1991		55234	1 Urbis LED	Teceo 48 LED 700mA	104 Watts	10.00 Metres	Galvanised Steel	
Y	59	STREET LIGHTING	PELHAM ROAD	IMMINGHAM	517821.32	414380.83	1991		55235	1 Urbis LED	Teceo 48 LED 700mA	104 Watts	10.00 Metres	Galvanised Steel	
Y	60	STREET LIGHTING	PELHAM ROAD	IMMINGHAM	517785.37	414374.25	2010		55236	1 Urbis LED	Teceo 48 LED 700mA	104 Watts	10.00 Metres	Steel	
Y	61	STREET LIGHTING	PELHAM ROAD	IMMINGHAM	517746.1	414383.28	2023	28/03/2023	69220	Urbis	Teceo 48 LED 700mA	104 Watts	12.00 Metres	Galvanised Steel	
Y	62	STREET LIGHTING	PELHAM ROAD	IMMINGHAM	517715.75	414364.69	1991		55238	1 Urbis LED	Teceo 48 LED 700mA	104 Watts	10.00 Metres	Galvanised Steel	
Y	63	STREET LIGHTING	PELHAM ROAD	IMMINGHAM	517679.05	414373.74	1991		55239	1 Urbis LED	Teceo 48 LED 700mA	104 Watts	10.00 Metres	Galvanised Steel	
Y	64	STREET LIGHTING	PELHAM ROAD	IMMINGHAM	517646.39	414356.68	1991		55240	1 Urbis LED	Teceo 48 LED 700mA	104 Watts	10.00 Metres	Galvanised Steel	
Y	65	STREET LIGHTING	PELHAM ROAD	IMMINGHAM	517611.58	414368.9	1991		55241	1 Urbis LED	Teceo 48 LED 700mA	104 Watts	10.00 Metres	Galvanised Steel	
Y	66	STREET LIGHTING	PELHAM ROAD	IMMINGHAM	517597.66	414348.06	1983		61893	1 Urbis LED	Teceo 48 LED 700mA	104 Watts	10.00 Metres	Galvanised Steel	
Y	66	STREET LIGHTING	PELHAM ROAD	IMMINGHAM	517597.66	414348.06	1983		62427	1 Urbis LED	Teceo 48 LED 700mA	104 Watts	10.00 Metres	Galvanised Steel	
Y	67	STREET LIGHTING	PELHAM ROAD	IMMINGHAM	517581.26	414323.05		13/12/2024	61894	Urbis	AMPERA 48 LED 800mA	113 Watts	12.00 Metres	Galvanised Steel	
Y	67	STREET LIGHTING	PELHAM ROAD	IMMINGHAM	517581.26	414323.05			62428	1 Urbis LED	Teceo 48 LED 700mA	113 Watts	12.00 Metres	Galvanised Steel	
Y	1	STREET LIGHTING	PILGRIM AVENUE	IMMINGHAM	518329.83	414173.2	1987		55457	1 Urbis LED	Teceo 24 LED 500mA	40 Watts	6.00 Metres	Galvanised Steel	
Y	2	STREET LIGHTING	PILGRIM AVENUE	IMMINGHAM	518351.35	414184.15	1987		55458	1 Urbis LED	Teceo 24 LED 500mA	40 Watts	6.00 Metres	Galvanised Steel	
Y	3	STREET LIGHTING	PILGRIM AVENUE	IMMINGHAM	518379.07	414189.78	1987		55459	1 Urbis LED	Teceo 24 LED 500mA	40 Watts	6.00 Metres	Galvanised Steel	
Y	4	STREET LIGHTING	PILGRIM AVENUE	IMMINGHAM	518407.04	414203.77	1987		55460	1 Urbis LED	Teceo 24 LED 500mA	40 Watts	6.00 Metres	Galvanised Steel	
Y	5	STREET LIGHTING	PILGRIM AVENUE	IMMINGHAM	518434.39	414217.55	1987		55461	1 Urbis LED	Teceo 24 LED 500mA	40 Watts	6.00 Metres	Galvanised Steel	
Y	6	STREET LIGHTING	PILGRIM AVENUE	IMMINGHAM	518461.91	414231.67	1987		55462	1 Urbis LED	Teceo 24 LED 500mA	40 Watts	6.00 Metres	Galvanised Steel	
Y	7	STREET LIGHTING	PILGRIM AVENUE	IMMINGHAM	518485.32	414251.48	1987		55463	1 Urbis LED	Teceo 24 LED 500mA	40 Watts	6.00 Metres	Galvanised Steel	
Y	8	STREET LIGHTING	PILGRIM AVENUE	IMMINGHAM	518517.85	414259.77	1987		55464	1 Urbis LED	Teceo 24 LED 500mA	40 Watts	6.00 Metres	Galvanised Steel	
Y	9	STREET LIGHTING	PILGRIM AVENUE	IMMINGHAM	518540.77	414279.2	1987		55465	1 Urbis LED	Teceo 24 LED 500mA	40 Watts	6.00 Metres	Galvanised Steel	
Y	10	STREET LIGHTING	PILGRIM AVENUE	IMMINGHAM	518577.3	414289.6	1987		55466	1 Urbis LED	Teceo 24 LED 500mA	40 Watts	6.00 Metres	Galvanised Steel	
Y	11	STREET LIGHTING	PILGRIM AVENUE	IMMINGHAM	518595.15	414308.14	1987		55467	1 Urbis LED	Teceo 24 LED 500mA	40 Watts	6.00 Metres	Galvanised Steel	
Y	12	STREET LIGHTING	PILGRIM AVENUE	IMMINGHAM	518627.8	414319.47	1987		55468	1 Urbis LED	Teceo 24 LED 500mA	40 Watts	6.00 Metres	Galvanised Steel	
Y	13	STREET LIGHTING	PILGRIM AVENUE	IMMINGHAM	518650.59	414342.19	1987		55469	1 Urbis LED	Teceo 24 LED 500mA	40 Watts	6.00 Metres	Galvanised Steel	
Y	14	STREET LIGHTING	PILGRIM AVENUE	IMMINGHAM	518682.61	414352.89	1987		55470	1 Urbis LED	Teceo 24 LED 500mA	40 Watts	6.00 Metres	Galvanised Steel	
Y	15	STREET LIGHTING	PILGRIM AVENUE	IMMINGHAM	518701.47	414373.71	1987		55471	1 Urbis LED	Teceo 24 LED 500mA	40 Watts	6.00 Metres	Galvanised Steel	
Y	16	STREET LIGHTING	PILGRIM AVENUE	IMMINGHAM	518724.26	414378.84	1991		55472	1 Urbis LED	Teceo 24 LED 500mA	40 Watts	6.00 Metres	Galvanised Steel	
Y	17	STREET LIGHTING	PILGRIM AVENUE	IMMINGHAM	518749.96	414397.64	1991		55473	1 Urbis LED	Teceo 24 LED 500mA	40 Watts	6.00 Metres	Galvanised Steel	
Y	18	STREET LIGHTING	PILGRIM AVENUE	IMMINGHAM	518772.36	414418.46	1991		55474	1 Urbis LED	Teceo 24 LED 500mA	40 Watts	6.00 Metres	Galvanised Steel	
Y	19	STREET LIGHTING	PILGRIM AVENUE	IMMINGHAM	518785.02	414443.14	1991		55475	1 Urbis LED	Teceo 24 LED 500mA	40 Watts	6.00 Metres	Galvanised Steel	
Y	20	STREET LIGHTING	PILGRIM AVENUE	IMMINGHAM	518807.3	414463.08	1991		55476	1 Urbis LED	Teceo 24 LED 500mA	40 Watts	6.00 Metres	Galvanised Steel	
Y	21	STREET LIGHTING	PILGRIM AVENUE	IMMINGHAM	518819.45	414484.66	1991		55477	1 Urbis LED	Teceo 24 LED 500mA	40 Watts	6.00 Metres	Galvanised Steel	
Y	22	STREET LIGHTING	PILGRIM AVENUE	IMMINGHAM	518828.94	414524.03	1991		55478	1 Urbis LED	Teceo 24 LED 500mA	40 Watts	6.00 Metres	Galvanised Steel	
Y	23	STREET LIGHTING	PILGRIM AVENUE	IMMINGHAM	518844.51	414544.22	1991		55479	1 Urbis LED	Teceo 24 LED 500mA	40 Watts	6.00 Metres	Galvanised Steel	
Y	1	STREET LIGHTING	PILGRIMS WAY	IMMINGHAM	517489.84	414896.44	1990		55480	Urbis	Axia 16 LED 350mA	19 Watts	5.00 Metres	Galvanised Steel	
Y	2	STREET LIGHTING	PILGRIMS WAY	IMMINGHAM	517468.96	414894.48	1999		55481	Urbis	Axia 16 LED 350mA	19 Watts	5.00 Metres	Galvanised Steel	
Y	3	STREET LIGHTING	PILGRIMS WAY	IMMINGHAM	517440.86	414884.3	1999		55482	Urbis	Axia 16 LED 350mA	19 Watts	5.00 Metres	Galvanised Steel	
Y	4	STREET LIGHTING	PILGRIMS WAY	IMMINGHAM	517422.51	414869.8	1990		55483	Urbis	Axia 16 LED 350mA	19 Watts	5.00 Metres	Galvanised Steel	
Y	5	STREET LIGHTING	PILGRIMS WAY	IMMINGHAM	517392.76	414873.54	1999		55484	Urbis	Axia 16 LED 350mA	19 Watts	5.00 Metres	Galvanised Steel	
Y	6	STREET LIGHTING	PILGRIMS WAY	IMMINGHAM	517365.8	414864.11	1990		55485	Urbis	Axia 16 LED 350mA	19 Watts	5.00 Metres	Galvanised Steel	
Y	7	STREET LIGHTING	PILGRIMS WAY	IMMINGHAM	517342.63	414874.93	1999		55486	Urbis	Axia 16 LED 350mA	19 Watts	5.00 Metres	Galvanised Steel	
Y	8	STREET LIGHTING	PILGRIMS WAY	IMMINGHAM	517318.96	414871.07	1990		55487	Urbis	Axia 16 LED 350mA	19 Watts	5.00 Metres	Galvanised Steel	
Y	9	STREET LIGHTING	PILGRIMS WAY	IMMINGHAM	517294.28	414877.97	1990		55488	Urbis	Axia 16 LED 350mA	19 Watts	5.00 Metres	Galvanised Steel	
Y	10	STREET LIGHTING	PILGRIMS WAY	IMMINGHAM	517270.99	414891.83	1999		55489	Urbis	Axia 16 LED 350mA	19 Watts	5.00 Metres	Galvanised Steel	
Y	11	STREET LIGHTING	PILGRIMS WAY	IMMINGHAM	517240.36	414886.33	1999		55490	Urbis	Axia 16 LED 350mA	19 Watts	5.00 Metres	Galvanised Steel	
Y	12	STREET LIGHTING	PILGRIMS WAY	IMMINGHAM	517215.3	414891.33	1999		55491	Urbis	Axia 16 LED 350mA	19 Watts	5.00 Metres	Galvanised Steel	
Y	1	STREET LIGHTING	ROBERT CLOSE	IMMINGHAM	517636.78	414608.28	2007		56147	Urbis	Axia 16 LED 350mA	19 Watts	6.00 Metres	Steel	
Y	2	STREET LIGHTING	ROBERT CLOSE	IMMINGHAM	517652.32	414581.29	2007		56148	Urbis	Axia 16 LED 350mA	19 Watts	6.00 Metres	Steel	
Y	3	STREET LIGHTING	ROBERT CLOSE	IMMINGHAM	517657.63	414549.91	2007		56149	Urbis	Axia 16 LED 350mA	19 Watts	6.00 Metres	Steel	
Y	4	STREET LIGHTING	ROBERT CLOSE	IMMINGHAM	517671.39	414522.05	2007		56150	Urbis	Axia 16 LED 350mA	19 Watts	6.00 Metres	Steel	
Y	5	STREET LIGHTING	ROBERT CLOSE	IMMINGHAM	517697.68	414500.08	2007		56151	Urbis	Axia 16 LED 350mA	19 Watts	6.00 Metres	Steel	

Y	1	STREET LIGHTING	ROVAL DRIVE	IMMINGHAM	517516.7	414623.49	2008		56344	1 Urbis LED	Axia 16 LED 500mA	28 Watts	6.00 Metres	Steel	
Y	2	STREET LIGHTING	ROVAL DRIVE	IMMINGHAM	517484.22	414616.34	2008		56345	Urbis	Axia 16 LED 350mA	19 Watts	6.00 Metres	Steel	
Y	3	STREET LIGHTING	ROVAL DRIVE	IMMINGHAM	517454.72	414609.85	2008		56346	1 Urbis LED	Axia 16 LED 500mA	28 Watts	6.00 Metres	Steel	
Y	4	STREET LIGHTING	ROVAL DRIVE	IMMINGHAM	517425.52	414603.46	2008		56347	1 Urbis LED	Axia 16 LED 500mA	28 Watts	6.00 Metres	Steel	
Y	5	STREET LIGHTING	ROVAL DRIVE	IMMINGHAM	517391.67	414597.26	2008		56348	1 Urbis LED	Axia 16 LED 500mA	28 Watts	6.00 Metres	Steel	
Y	6	STREET LIGHTING	ROVAL DRIVE	IMMINGHAM	517361.86	414592.12	2008		56349	1 Urbis LED	Axia 16 LED 500mA	28 Watts	6.00 Metres	Steel	
Y	7	STREET LIGHTING	ROVAL DRIVE	IMMINGHAM	517338.42	414586.32	2008		56350	1 Urbis LED	Axia 16 LED 500mA	28 Watts	6.00 Metres	Steel	
Y	8	STREET LIGHTING	ROVAL DRIVE	IMMINGHAM	517312	414587.74	2012		56351	1 Urbis LED	Axia 16 LED 500mA	28 Watts	6.00 Metres	Steel	
Y	9	STREET LIGHTING	ROVAL DRIVE	IMMINGHAM	517285.18	414584.44	2012		56352	1 Urbis LED	Axia 16 LED 500mA	28 Watts	6.00 Metres	Steel	
Y	10	STREET LIGHTING	ROVAL DRIVE	IMMINGHAM	517256.47	414580.59	2012		56353	1 Urbis LED	Axia 16 LED 500mA	28 Watts	6.00 Metres	Steel	
Y	1	STREET LIGHTING	SACKVILLE CLOSE	IMMINGHAM	518764.26	414651.89	2009		56456	Urbis	Axia 16 LED 350mA	19 Watts	6.00 Metres	Steel	
Y	2	STREET LIGHTING	SACKVILLE CLOSE	IMMINGHAM	518784.51	414640.04	2009		56457	Urbis	Axia 16 LED 350mA	19 Watts	6.00 Metres	Steel	
Y	3	STREET LIGHTING	SACKVILLE CLOSE	IMMINGHAM	518796.73	414663.29	2009		56458	Urbis	Axia 16 LED 350mA	19 Watts	6.00 Metres	Steel	
Y	1	STREET LIGHTING	SACKVILLE ROAD	IMMINGHAM	518836.14	414585.43	2009		56459	1 Urbis LED	Axia 16 LED 500mA	28 Watts	6.00 Metres	Steel	
Y	2	STREET LIGHTING	SACKVILLE ROAD	IMMINGHAM	518801.47	414584.53	2009		56460	1 Urbis LED	Axia 16 LED 500mA	28 Watts	6.00 Metres	Steel	
Y	3	STREET LIGHTING	SACKVILLE ROAD	IMMINGHAM	518777.04	414604	2009		56461	1 Urbis LED	Axia 16 LED 500mA	28 Watts	6.00 Metres	Steel	
Y	4	STREET LIGHTING	SACKVILLE ROAD	IMMINGHAM	518754.85	414632.81	2009		56462	1 Urbis LED	Axia 16 LED 500mA	28 Watts	6.00 Metres	Steel	
Y	5	STREET LIGHTING	SACKVILLE ROAD	IMMINGHAM	518744.18	414661.07	2009		56463	1 Urbis LED	Axia 16 LED 500mA	28 Watts	6.00 Metres	Steel	
Y	6	STREET LIGHTING	SACKVILLE ROAD	IMMINGHAM	518729.66	414679.42	2009		56464	1 Urbis LED	Axia 16 LED 500mA	28 Watts	6.00 Metres	Steel	
Y	1	STREET LIGHTING	SHETLAND WAY	IMMINGHAM	518410.71	413923.43	1998		57173	Urbis	Axia 16 LED 350mA	19 Watts	5.00 Metres	Galvanised Steel	
Y	2	STREET LIGHTING	SHETLAND WAY	IMMINGHAM	518440.59	413918.43	1965		57174	Urbis	Axia 16 LED 350mA	19 Watts	5.00 Metres	Galvanised Steel	
Y	3	STREET LIGHTING	SHETLAND WAY	IMMINGHAM	518470.46	413926.98	2014	31/03/2014	57175	Urbis	Axia 16 LED 350mA	19 Watts	6.00 Metres	Steel	
Y	4	STREET LIGHTING	SHETLAND WAY	IMMINGHAM	518497.42	413939.44	2014	31/03/2014	57176	Urbis	Axia 16 LED 350mA	19 Watts	6.00 Metres	Steel	
Y	5	STREET LIGHTING	SHETLAND WAY	IMMINGHAM	518519.57	413956.22	1965		57177	Urbis	Axia 16 LED 350mA	19 Watts	5.00 Metres	Galvanised Steel	
Y	1	STREET LIGHTING	SOMERTON ROAD	IMMINGHAM	518976.2	414482.87	1997		57304	Urbis	Axia 16 LED 350mA	19 Watts	5.00 Metres	Galvanised Steel	
Y	2	STREET LIGHTING	SOMERTON ROAD	IMMINGHAM	518989.5	414462.56	1997		57305	Urbis	Axia 16 LED 350mA	19 Watts	5.00 Metres	Galvanised Steel	
Y	3	STREET LIGHTING	SOMERTON ROAD	IMMINGHAM	518991.52	414435.6	1997		57306	Urbis	Axia 16 LED 350mA	19 Watts	5.00 Metres	Galvanised Steel	
Y	4	STREET LIGHTING	SOMERTON ROAD	IMMINGHAM	519015.32	414421.23	1997		57307	Urbis	Axia 16 LED 350mA	19 Watts	5.00 Metres	Galvanised Steel	
Y	5	STREET LIGHTING	SOMERTON ROAD	IMMINGHAM	519017.98	414394.54	1997		57308	Urbis	Axia 16 LED 350mA	19 Watts	5.00 Metres	Galvanised Steel	
Y	6	STREET LIGHTING	SOMERTON ROAD	IMMINGHAM	519038.62	414383.84	1997		57309	Urbis	Axia 16 LED 350mA	19 Watts	5.00 Metres	Galvanised Steel	
Y	7	STREET LIGHTING	SOMERTON ROAD	IMMINGHAM	519039.63	414356.5	1997		57310	Urbis	Axia 16 LED 350mA	19 Watts	5.00 Metres	Galvanised Steel	
Y	8	STREET LIGHTING	SOMERTON ROAD	IMMINGHAM	519063.93	414344.41	1997		57311	Urbis	Axia 16 LED 350mA	19 Watts	5.00 Metres	Galvanised Steel	
Y	9	STREET LIGHTING	SOMERTON ROAD	IMMINGHAM	519066.34	414316.45	1997		57312	Urbis	Axia 16 LED 350mA	19 Watts	5.00 Metres	Galvanised Steel	
Y	10	STREET LIGHTING	SOMERTON ROAD	IMMINGHAM	519085.84	414295.12	1997		57313	Urbis	Axia 16 LED 350mA	19 Watts	5.00 Metres	Galvanised Steel	
Y	11	STREET LIGHTING	SOMERTON ROAD	IMMINGHAM	519079	414266.39	1997		57314	Urbis	Axia 16 LED 350mA	19 Watts	5.00 Metres	Galvanised Steel	
Y	12	STREET LIGHTING	SOMERTON ROAD	IMMINGHAM	519077.11	414241.14	1997		57315	Urbis	Axia 16 LED 350mA	19 Watts	5.00 Metres	Galvanised Steel	
Y	1	STREET LIGHTING	SONJA CREST	IMMINGHAM	517645.96	414732.9	2007		57316	Urbis	Axia 16 LED 350mA	19 Watts	6.00 Metres	Steel	
Y	2	STREET LIGHTING	SONJA CREST	IMMINGHAM	517669.57	414707.15	2007		57317	Urbis	Axia 16 LED 350mA	19 Watts	6.00 Metres	Steel	
Y	3	STREET LIGHTING	SONJA CREST	IMMINGHAM	517689.35	414677.94	2007		57318	Urbis	Axia 16 LED 350mA	19 Watts	6.00 Metres	Steel	
Y	4	STREET LIGHTING	SONJA CREST	IMMINGHAM	517702.13	414652.45	2007		57319	Urbis	Axia 16 LED 350mA	19 Watts	6.00 Metres	Steel	
Y	5	STREET LIGHTING	SONJA CREST	IMMINGHAM	517712.82	414624.93	2007		57320	Urbis	Axia 16 LED 350mA	19 Watts	6.00 Metres	Steel	
Y	6	STREET LIGHTING	SONJA CREST	IMMINGHAM	517723.5	414597.02	2007		57321	Urbis	Axia 16 LED 350mA	19 Watts	6.00 Metres	Steel	
Y	7	STREET LIGHTING	SONJA CREST	IMMINGHAM	517734.76	414571	2007		57322	Urbis	Axia 16 LED 350mA	19 Watts	6.00 Metres	Steel	
Y	8	STREET LIGHTING	SONJA CREST	IMMINGHAM	517751.35	414540.12	2007		57323	Urbis	Axia 16 LED 350mA	19 Watts	6.00 Metres	Steel	
Y	9	STREET LIGHTING	SONJA CREST	IMMINGHAM	517761.13	414509.82	2007		57324	Urbis	Axia 16 LED 350mA	19 Watts	6.00 Metres	Steel	
Y	10	STREET LIGHTING	SONJA CREST	IMMINGHAM	517751.68	414473.41	2007		57325	Urbis	Axia 16 LED 350mA	19 Watts	6.00 Metres	Steel	
Y	1	STREET LIGHTING	SPINNEY CLOSE	IMMINGHAM	518344.77	414930.45	1970		57460	1 Urbis LED	Axia 16 LED 500mA	28 Watts	5.00 Metres	Galvanised Steel	
Y	2	STREET LIGHTING	SPINNEY CLOSE	IMMINGHAM	518324.52	414956.85	1970		57461	1 Urbis LED	Axia 16 LED 500mA	28 Watts	5.00 Metres	Galvanised Steel	
Y	3	STREET LIGHTING	SPINNEY CLOSE	IMMINGHAM	518313.89	414984.13	1970		57462	1 Urbis LED	Axia 16 LED 500mA	28 Watts	5.00 Metres	Galvanised Steel	
Y	4	STREET LIGHTING	SPINNEY CLOSE	IMMINGHAM	518288.32	415004.13	1970		57463	1 Urbis LED	Axia 16 LED 500mA	28 Watts	5.00 Metres	Galvanised Steel	
Y	5	STREET LIGHTING	SPINNEY CLOSE	IMMINGHAM	518261.87	414992.55	1970		57464	1 Urbis LED	Axia 16 LED 500mA	28 Watts	5.00 Metres	Galvanised Steel	
Y	1	STREET LIGHTING	SPRING STREET	IMMINGHAM	519050.75	414970.83	2002		57497	Urbis	Axia 16 LED 350mA	19 Watts	6.00 Metres	Galvanised Steel	
Y	2	STREET LIGHTING	SPRING STREET	IMMINGHAM	519023.16	414965.76	2002		57498	Urbis	Axia 16 LED 350mA	19 Watts	6.00 Metres	Galvanised Steel	
Y	3	STREET LIGHTING	SPRING STREET	IMMINGHAM	519006.99	414946.73	2002		57499	Urbis	Axia 16 LED 350mA	19 Watts	6.00 Metres	Galvanised Steel	
Y	4	STREET LIGHTING	SPRING STREET	IMMINGHAM	518979.38	414926.81	2002		57500	Urbis	Axia 16 LED 350mA	19 Watts	6.00 Metres	Galvanised Steel	
Y	5	STREET LIGHTING	SPRING STREET	IMMINGHAM	518960.39	414907.91	2002	05/06/2002	57501	Urbis	Axia 16 LED 350mA	19 Watts	6.00 Metres	Galvanised Steel	
Y	6	STREET LIGHTING	SPRING STREET	IMMINGHAM	518953.51	414920.26	2002		57502	Urbis	Axia 16 LED 350mA	19 Watts	6.00 Metres	Galvanised Steel	
Y	7	STREET LIGHTING	SPRING STREET	IMMINGHAM	518924.73	414882.68	2002		57503	Urbis	Axia 16 LED 350mA	19 Watts	6.00 Metres	Galvanised Steel	
Y	8	STREET LIGHTING	SPRING STREET	IMMINGHAM	518920.56	414900.2	2002		57504	Urbis	Axia 16 LED 350mA	19 Watts	6.00 Metres	Galvanised Steel	
Y	9	STREET LIGHTING	SPRING STREET	IMMINGHAM	518904.08	414883.88	2002		57505	Urbis	Axia 16 LED 350mA	19 Watts	6.00 Metres	Galvanised Steel	
Y	10	STREET LIGHTING	SPRING STREET	IMMINGHAM	518885.06	414854.95	2002		57506	Urbis	Axia 16 LED 350mA	19 Watts	6.00 Metres	Galvanised Steel	
Y	11	STREET LIGHTING	SPRING STREET	IMMINGHAM	518857.79	414850.75	2002		57507	Urbis	Axia 16 LED 350mA	19 Watts	6.00 Metres	Galvanised Steel	
Y	1	STREET LIGHTING	STAINTON DRIVE	IMMINGHAM	517564.11	414612.48	2007		58016	1 Urbis LED	Axia 16 LED 500mA	28 Watts	6.00 Metres	Steel	
Y	2	STREET LIGHTING	STAINTON DRIVE	IMMINGHAM	517600.28	414620.9	2007		58017	1 Urbis LED	Axia 16 LED 500mA	28 Watts	6.00 Metres	Steel	
Y	3	STREET LIGHTING	STAINTON DRIVE	IMMINGHAM	517632.67	414627.4	2007		58018	1 Urbis LED	Axia 16 LED 500mA	28 Watts	6.00 Metres	Steel	
Y	4	STREET LIGHTING	STAINTON DRIVE	IMMINGHAM	517667.05	414632.35	2007		58019	1 Urbis LED	Axia 16 LED 500mA	28 Watts	6.00 Metres	Steel	
Y	5	STREET LIGHTING	STAINTON DRIVE	IMMINGHAM	517693.91	414627.95	2007		58020	1 Urbis LED	Axia 16 LED 500mA	28 Watts	6.00 Metres	Steel	
Y	1	STREET LIGHTING	SUNNINGDALE DRIVE	IMMINGHAM	518583.65	415093.56	1989		58594	Urbis	Axia 16 LED 350mA	19 Watts	5.00 Metres	Galvanised Steel	
Y	2	STREET LIGHTING	SUNNINGDALE DRIVE	IMMINGHAM	518582.13	415062.87	1989		58595	Urbis	Axia 16 LED 350mA	19 Watts	5.00 Metres	Galvanised Steel	
Y	3	STREET LIGHTING	SUNNINGDALE DRIVE	IMMINGHAM	518558.46	415044.58	1989		58596	Urbis	Axia 16 LED 350mA	19 Watts	5.00 Metres	Galvanised Steel	
Y	1	STREET LIGHTING	TALBOT ROAD	IMMINGHAM	518848.79	414520.02	1998		58714	Urbis	Axia 16 LED 350mA	19 Watts	5.00 Metres	Galvanised Steel	
Y	2	STREET LIGHTING	TALBOT ROAD	IMMINGHAM	518868.78	414502.43	2002		58715	Urbis	Axia 16 LED 350mA	19 Watts	5.00 Metres	Stainless Steel	
Y	3	STREET LIGHTING	TALBOT ROAD	IMMINGHAM	518887.64	414503.63	1998		58716	Urbis	Axia 16 LED 350mA	19 Watts	5.00 Metres	Galvanised Steel	
Y	4	STREET LIGHTING	TALBOT ROAD	IMMINGHAM	518906.25	414527.62	1998		58717	Urbis	Axia 16 LED 350mA	19 Watts	5.00 Metres	Galvanised Steel	
Y	5	STREET LIGHTING	TALBOT ROAD	IMMINGHAM	518931.31	414532.87	1998		58718	Urbis	Axia 16 LED 350mA	19 Watts	5.00 Metres	Galvanised Steel	
Y	6	STREET LIGHTING	TALBOT ROAD	IMMINGHAM	518946.12	414554.07	1998		58719	Urbis	Axia 16 LED 350mA	19 Watts	5.00 Metres	Galvanised Steel	
Y	7	STREET LIGHTING	TALBOT ROAD	IMMINGHAM	518977.31	414556.88	2014		58720	Urbis	Axia 16 LED 350mA	19 Watts	6.00 Metres	Galvanised Steel	
Y	8	STREET LIGHTING	TALBOT ROAD	IMMINGHAM	518992.5	414546.31	1998		58721	Urbis	Axia 16 LED 350mA	19 Watts	5.00 Metres	Galvanised Steel	
Y	9	STREET LIGHTING	TALBOT ROAD	IMMINGHAM	518998.2	414528.34	2021	06/09/2021	68627	Urbis	Axia 16 LED 350mA	19 Watts	6.00 Metres	Galvanised Steel	
Y	10	STREET LIGHTING	TALBOT ROAD	IMMINGHAM	518986.04	414504.98	1998		58723	Urbis	Axia 16 LED 350mA	19 Watts	5.00 Metres	Galvanised Steel	
Y	11	STREET LIGHTING	TALBOT ROAD	IMMINGHAM	518958.95	414500.23	1998		58724	Urbis	Axia 16 LED 350mA	19 Watts	5.00 Metres	Galvanised Steel	
Y	12	STREET LIGHTING	TALBOT ROAD	IMMINGHAM	518941.49	414475.74	1998		58725	Urbis	Axia 16 LED 350mA	19 Watts	5.00 Metres	Galvanised Steel	
Y	13	STREET LIGHTING	TALBOT ROAD	IMMINGHAM	518913.24	414470.01	1998		58726	Urbis	Axia 16 LED 350mA	19 Watts	5.00 Metres	Galvanised Steel	
Y	14	STREET LIGHTING	TALBOT ROAD	IMMINGHAM	518897.42	414446.79	1998		58727	Urbis	Axia 16 LED 350mA	19 Watts	5.00 Metres	Galvanised Steel	
Y	15	STREET LIGHTING	TALBOT ROAD	IMMINGHAM	518869.06	414440.52	1998		58728	Urbis	Axia 16 LED 350mA	19 Watts	5.00 Metres	Galvanised Steel	
Y	16	STREET LIGHTING	TALBOT ROAD	IMMINGHAM	518856.15	414416.53	1998		58729	Urbis	Axia 16 LED 350mA	19 Watts	5.00 Metres	Galvanised Steel	
Y	17	STREET LIGHTING	TALBOT ROAD	IMMINGHAM	518834.13	414416.3	1998		58730	Urbis	Axia 16 LED 350mA	19 Watts	5.00 Metres	Galvanised Steel	
Y	18	STREET LIGHTING	TALBOT ROAD	IMMINGHAM	518811.72	414412.51	1998		58731	Urbis	Axia 16 LED 350mA	19 Watts	5.00 Metres	Galvanised Steel	
Y	19	STREET LIGHTING	TALBOT ROAD	IMMINGHAM	518802.99	414433.58	1998		58732	Urbis	Axia 16 LED 350mA	19 Watts	5.00 Metres	Galvanised Steel	
Y	1	STREET LIGHTING	THORNBURY ROAD	IMMINGHAM	518848.11	414258.36	1998		59131	Urbis	Axia 16 LED 350mA	19 Watts	5.00 Metres	Galvanised Steel	
Y	2	STREET LIGHTING	THORNBURY ROAD	IMMINGHAM	518845.96	414231.59	1998		59132	Urbis	Axia 16 LED 350mA	19 Watts	5.00 Metres	Galvanised Steel	
Y	3	STREET LIGHTING	THORNBURY ROAD	IMMINGHAM	518826.84	414215.83	1998		59133	Urbis	Axia 16 LED 350mA	19 Watts	5.00 Metres	Galvanised Steel	
Y	4	STREET LIGHTING	THORNBURY ROAD	IMMINGHAM	518830.36	414193.31	1998		59134	Urbis	Axia 16 LED 350mA	19 Watts	5.00 Metres	Galvanised Steel	
Y	5	STREET LIGHTING	THORNBURY ROAD	IMMINGHAM	518842.89	414178.88	1998		59135	Urbis	Axia 16 LED 350mA	19 Watts	5.00 Metres	Galvanised Steel	
Y	6	STREET LIGHTING	THORNBURY ROAD	IMMINGHAM	518844.13	414151.22	1998		59136	Urbis	Axia 16 LED 350mA	19 Watts	5.00 Metres	Galvanised Steel	
Y	1	STREET LIGHTING	TRENCHARD CLOSE	IMMINGHAM	519296.41	415086.87	1995		59418	Urbis	Axia 16 LED 350mA	19 Watts	5.00 Metres	Galvanised Steel	
Y	2	STREET LIGHTING	TRENCHARD CLOSE	IMMINGHAM	519266.54	415079.46	1995		59419	Urbis	Axia 16 LED 350mA	19 Watts	5.00 Metres	Galvanised Steel	
Y	3	STREET LIGHTING	TRENCHARD CLOSE	IMMINGHAM	519247.55	415067.38	1995		59420	Urbis	Axia 16 LED 350mA	19 Watts	5.00 Metres	Galvanised Steel	
Y	4	STREET LIGHTING	TRENCHARD CLOSE	IMMINGHAM	519229.7	415064.28	1995		59421	Urbis	Axia 16 LED 350mA	19 Watts	5.00 Metres	Galvanised Steel	
Y	5	STREET LIGHTING	TRENCHARD CLOSE	IMMINGHAM	519218.82	415085.61	1995		59422	Urbis	Axia 16 LED 350mA	19 Watts	5.00 Metres	Galvanised Steel	
Y	1	STREET LIGHTING	TUMMEL COURT	IMMINGHAM	517968.8	413971.86	1985		59465	Urbis	Axia 16 LED 350mA	19 Watts	5.00 Metres	Galvanised Steel	
Y	2	STREET LIGHTING	TUMMEL COURT	IMMINGHAM	517940.96	413963.06	1973		59466	Urbis	Axia 16 LED 350mA	19 Watts	5.00 Metres	Galvanised Steel	
Y	3	STREET LIGHTING	TUMMEL COURT	IMMINGHAM	517918.55	413949.46	1973		59467	Urbis	Axia 8 LED 350mA	10 Watts	5.00 Metres	Galvanised Steel	
Y	1	STREET LIGHTING	WASHDYKE LANE	IMMINGHAM	518422.93	414732.64	2014		59838	1 Urbis LED	Teceo 48 LED 500mA	79 Watts	10.00 Metres	Steel	
Y	2	STREET LIGHTING	WASHDYKE LANE	IMMINGHAM	518396.55	414733.61	2014		66362	1 Urbis LED	Teceo 48 LED 500mA	79 Watts	10.00 Metres	Steel	
Y	3	STREET LIGHTING	WASHDYKE LANE	IMMINGHAM	518383.51	414753.87	2014		66363	1 Urbis LED	Teceo 48 LED 500mA	79 Watts	10.00 Metres	Steel	
Y	4	STREET LIGHTING	WASHDYKE LANE	IMMINGHAM	518375.88	414784.59	2014		66364	1 Urbis LED	Teceo 48 LED 500mA	79 Watts	8.00 Metres	Steel	
Y	5	STREET LIGHTING	WASHDYKE LANE	IMMINGHAM	518344.07	414809.26	2014		66365	1 Urbis LED	Teceo 48 LED 500mA	79 Watts	8.00 Metres	Steel	
Y	6	STREET LIGHTING	WASHDYKE LANE	IMMINGHAM	518332.42	414832.87	2014		66366	1 Urbis LED	Teceo 48 LED 500mA	79 Watts	8.00 Metres	Steel	
Y	7	STREET LIGHTING	WASHDYKE LANE	IMMINGHAM	518309.32	414852.32	2014		66385	1 Urbis LED	Teceo 48 LED 500mA	79 Watts	8.00 Metres	Steel	

Y	8	STREET LIGHTING	WASHDYKE LANE	IMMINGHAM	518292.46	414870.25	2014		66367	1 Urbis LED	Teceo 48 LED 500mA	79 Watts	8.00 Metres	Steel	
Y	9	STREET LIGHTING	WASHDYKE LANE	IMMINGHAM	518284.38	414898.64	2014		66368	1 Urbis LED	Teceo 48 LED 500mA	79 Watts	8.00 Metres	Steel	
Y	10	STREET LIGHTING	WASHDYKE LANE	IMMINGHAM	518262.73	414927.21	2007		59845	1 Urbis LED	Teceo 48 LED 500mA	79 Watts	8.00 Metres	Steel	
Y	11	STREET LIGHTING	WASHDYKE LANE	IMMINGHAM	518244.83	414949.53	2007		59846	1 Urbis LED	Teceo 48 LED 500mA	79 Watts	8.00 Metres	Steel	
Y	12	STREET LIGHTING	WASHDYKE LANE	IMMINGHAM	518226.34	414972.77	2007		59847	1 Urbis LED	Teceo 48 LED 500mA	79 Watts	8.00 Metres	Steel	
Y	13	STREET LIGHTING	WASHDYKE LANE	IMMINGHAM	518209.58	414994.02	2007		59848	1 Urbis LED	Teceo 48 LED 500mA	79 Watts	8.00 Metres	Steel	
Y	14	STREET LIGHTING	WASHDYKE LANE	IMMINGHAM	518184.1	415011.7	2007		59849	1 Urbis LED	Teceo 48 LED 500mA	79 Watts	8.00 Metres	Steel	
Y	15	STREET LIGHTING	WASHDYKE LANE	IMMINGHAM	518169.12	415046.05	2007		59850	1 Urbis LED	Teceo 48 LED 500mA	79 Watts	8.00 Metres	Steel	
Y	16	STREET LIGHTING	WASHDYKE LANE	IMMINGHAM	518136.6	415071.07	2007		59851	1 Urbis LED	Teceo 48 LED 500mA	79 Watts	8.00 Metres	Steel	
Y	17	STREET LIGHTING	WASHDYKE LANE	IMMINGHAM	518117.4	415108.62	2007		59852	1 Urbis LED	Teceo 48 LED 500mA	79 Watts	8.00 Metres	Steel	
Y	18	STREET LIGHTING	WASHDYKE LANE	IMMINGHAM	518087.23	415138.58	2007		59853	1 Urbis LED	Teceo 48 LED 500mA	79 Watts	8.00 Metres	Steel	
Y	19	STREET LIGHTING	WASHDYKE LANE	IMMINGHAM	518054.37	415162.2	2007		59854	1 Urbis LED	Teceo 48 LED 500mA	79 Watts	8.00 Metres	Steel	
Y	20	STREET LIGHTING	WASHDYKE LANE	IMMINGHAM	518022.11	415182.36	2007		59855	1 Urbis LED	Teceo 48 LED 500mA	79 Watts	8.00 Metres	Steel	
Y	21	STREET LIGHTING	WASHDYKE LANE	IMMINGHAM	517981.65	415195.1	2007		59856	1 Urbis LED	Teceo 48 LED 500mA	79 Watts	8.00 Metres	Steel	
Y	22	STREET LIGHTING	WASHDYKE LANE	IMMINGHAM	517958.52	415219.05	2007		59857	1 Urbis LED	Teceo 48 LED 500mA	79 Watts	8.00 Metres	Steel	
Y	23	STREET LIGHTING	WASHDYKE LANE	IMMINGHAM	517922.9	415233.92	2007		59858	1 Urbis LED	Teceo 48 LED 500mA	79 Watts	8.00 Metres	Steel	
Y	24	STREET LIGHTING	WASHDYKE LANE	IMMINGHAM	517884.89	415239.38	2007		59859	1 Urbis LED	Teceo 48 LED 500mA	79 Watts	8.00 Metres	Steel	
Y	1	STREET LIGHTING	WATERWORKS STREET	IMMINGHAM	518960.38	415100.88	1980		59879	Urbis	Axia 16 LED 350mA	19 Watts	5.00 Metres	Galvanised Steel	
Y	2	STREET LIGHTING	WATERWORKS STREET	IMMINGHAM	518975.06	415067.72	1980		59880	Urbis	Axia 16 LED 350mA	19 Watts	5.00 Metres	Galvanised Steel	
Y	3	STREET LIGHTING	WATERWORKS STREET	IMMINGHAM	518990.25	415077.54	1985		59881	Urbis	Axia 16 LED 350mA	19 Watts	5.00 Metres	Galvanised Steel	
Y	4	STREET LIGHTING	WATERWORKS STREET	IMMINGHAM	519004.18	415095.32	1985		59882	Urbis	Axia 16 LED 350mA	19 Watts	5.00 Metres	Galvanised Steel	
Y	5	STREET LIGHTING	WATERWORKS STREET	IMMINGHAM	519020.51	415078.74	1985		59883	Urbis	Axia 16 LED 350mA	19 Watts	5.00 Metres	Galvanised Steel	
Y	6	STREET LIGHTING	WATERWORKS STREET	IMMINGHAM	519008.4	415049.81	2020	28/09/2020	68028	Urbis	Axia 16 LED 350mA	19 Watts	6.00 Metres	Galvanised Steel	
Y	7	STREET LIGHTING	WATERWORKS STREET	IMMINGHAM	519028.1	415013.54	1980		59885	Urbis	Axia 16 LED 350mA	19 Watts	5.00 Metres	Galvanised Steel	
Y	8	STREET LIGHTING	WATERWORKS STREET	IMMINGHAM	519065.5	414990.01	2020	28/09/2020	68325	Urbis	Axia 16 LED 350mA	19 Watts	6.00 Metres	Galvanised Steel	
Y	1	STREET LIGHTING	WOODLANDS AVENUE	IMMINGHAM	517981.18	415217.23	1999		61124	1 Urbis LED	Axia 16 LED 500mA	28 Watts	6.00 Metres	Stainless Steel	
Y	2	STREET LIGHTING	WOODLANDS AVENUE	IMMINGHAM	517999.6	415247.37	2002		61125	1 Urbis LED	Axia 16 LED 500mA	28 Watts	6.00 Metres	Stainless Steel	
Y	3	STREET LIGHTING	WOODLANDS AVENUE	IMMINGHAM	518021.39	415273.48	2002		61126	1 Urbis LED	Axia 16 LED 500mA	28 Watts	6.00 Metres	Stainless Steel	
Y	4	STREET LIGHTING	WOODLANDS AVENUE	IMMINGHAM	518051.08	415286.06	2002		61127	1 Urbis LED	Axia 16 LED 500mA	28 Watts	6.00 Metres	Stainless Steel	
Y	5	STREET LIGHTING	WOODLANDS AVENUE	IMMINGHAM	518076.72	415292.72	2002		61128	1 Urbis LED	Axia 16 LED 500mA	28 Watts	6.00 Metres	Stainless Steel	
Y	6	STREET LIGHTING	WOODLANDS AVENUE	IMMINGHAM	518113.44	415294.93	2002		61129	1 Urbis LED	Axia 16 LED 500mA	28 Watts	6.00 Metres	Stainless Steel	
Y	7	STREET LIGHTING	WOODLANDS AVENUE	IMMINGHAM	518145.49	415280.97	2001		61130	1 Urbis LED	Axia 16 LED 500mA	28 Watts	6.00 Metres	Galvanised Steel	
Y	8	STREET LIGHTING	WOODLANDS AVENUE	IMMINGHAM	518163.49	415261.2	1999		61131	1 Urbis LED	Axia 16 LED 500mA	28 Watts	6.00 Metres	Galvanised Steel	
Y	9	STREET LIGHTING	WOODLANDS AVENUE	IMMINGHAM	518185.38	415235	2002		61132	1 Urbis LED	Axia 16 LED 500mA	28 Watts	6.00 Metres	Stainless Steel	
Y	10	STREET LIGHTING	WOODLANDS AVENUE	IMMINGHAM	518202.79	415202.02	2002		61133	1 Urbis LED	Axia 16 LED 500mA	28 Watts	6.00 Metres	Stainless Steel	
Y	11	STREET LIGHTING	WOODLANDS AVENUE	IMMINGHAM	518231.2	415187.22	2002		61134	1 Urbis LED	Axia 16 LED 500mA	28 Watts	6.00 Metres	Stainless Steel	
Y	12	STREET LIGHTING	WOODLANDS AVENUE	IMMINGHAM	518254.41	415162.54	2002		61135	1 Urbis LED	Axia 16 LED 500mA	28 Watts	6.00 Metres	Stainless Steel	
Y	13	STREET LIGHTING	WOODLANDS AVENUE	IMMINGHAM	518267.77	415135.39	2002		61136	1 Urbis LED	Axia 16 LED 500mA	28 Watts	6.00 Metres	Stainless Steel	
Y	14	STREET LIGHTING	WOODLANDS AVENUE	IMMINGHAM	518298.83	415115.56	2002		61137	1 Urbis LED	Axia 16 LED 500mA	28 Watts	6.00 Metres	Galvanised Steel	
Y	15	STREET LIGHTING	WOODLANDS AVENUE	IMMINGHAM	518322.1	415089.34	2002		61138	1 Urbis LED	Axia 16 LED 500mA	28 Watts	6.00 Metres	Stainless Steel	
Y	16	STREET LIGHTING	WOODLANDS AVENUE	IMMINGHAM	518338.89	415055.53	2002		61139	1 Urbis LED	Axia 16 LED 500mA	28 Watts	6.00 Metres	Stainless Steel	
Y	17	STREET LIGHTING	WOODLANDS AVENUE	IMMINGHAM	518359.85	415032.76	2002		61140	1 Urbis LED	Axia 16 LED 500mA	28 Watts	6.00 Metres	Stainless Steel	
Y	18	STREET LIGHTING	WOODLANDS AVENUE	IMMINGHAM	518382.65	415011.41	2002		61141	1 Urbis LED	Axia 16 LED 500mA	28 Watts	6.00 Metres	Stainless Steel	
Y	19	STREET LIGHTING	WOODLANDS AVENUE	IMMINGHAM	518433.95	415008.95	2002		61142	1 Urbis LED	Axia 16 LED 500mA	28 Watts	6.00 Metres	Stainless Steel	
Y	20	STREET LIGHTING	WOODLANDS AVENUE	IMMINGHAM	518461.06	415026.5	2002		61143	1 Urbis LED	Axia 16 LED 500mA	28 Watts	6.00 Metres	Stainless Steel	
Y	21	STREET LIGHTING	WOODLANDS AVENUE	IMMINGHAM	518483.27	415057.4	1988		61144	1 Urbis LED	Axia 16 LED 500mA	28 Watts	5.00 Metres	Galvanised Steel	
Y	22	STREET LIGHTING	WOODLANDS AVENUE	IMMINGHAM	518512.45	415071.48	2020	28/09/2020	68029	Urbis	Axia 24 LED 500mA	28 Watts	6.00 Metres	Galvanised Steel	
Y	23	STREET LIGHTING	WOODLANDS AVENUE	IMMINGHAM	518533.14	415099.42	1988		61146	1 Urbis LED	Axia 16 LED 500mA	28 Watts	5.00 Metres	Galvanised Steel	
Y	24	STREET LIGHTING	WOODLANDS AVENUE	IMMINGHAM	518544.91	415129.11	1988		61147	1 Urbis LED	Axia 16 LED 500mA	28 Watts	5.00 Metres	Galvanised Steel	
Y	25	STREET LIGHTING	WOODLANDS AVENUE	IMMINGHAM	518556.94	415158.85	1988		61148	1 Urbis LED	Axia 16 LED 500mA	28 Watts	5.00 Metres	Galvanised Steel	
Y	26	STREET LIGHTING	WOODLANDS AVENUE	IMMINGHAM	518570.59	415192.08	1988		61149	1 Urbis LED	Axia 16 LED 500mA	28 Watts	5.00 Metres	Galvanised Steel	
Y	27	STREET LIGHTING	WOODLANDS AVENUE	IMMINGHAM	518573.02	415221.57	1988		61150	1 Urbis LED	Axia 16 LED 500mA	28 Watts	5.00 Metres	Galvanised Steel	
Y	28	STREET LIGHTING	WOODLANDS AVENUE	IMMINGHAM	518595.09	415246.94	2020	28/09/2020	68326	Urbis	Axia 24 LED 500mA	28 Watts	6.00 Metres	Galvanised Steel	
Y	29	STREET LIGHTING	WOODLANDS AVENUE	IMMINGHAM	518616.44	415264.44	1988		61152	1 Urbis LED	Axia 16 LED 500mA	28 Watts	5.00 Metres	Galvanised Steel	
Y	30	STREET LIGHTING	WOODLANDS AVENUE	IMMINGHAM	518648.27	415281.55	1988		61153	1 Urbis LED	Axia 16 LED 500mA	28 Watts	5.00 Metres	Galvanised Steel	
Y	1	STREET LIGHTING	WORSLEY CLOSE	IMMINGHAM	518884.16	414631.41	2014	31/03/2014	61236	Urbis	Axia 16 LED 350mA	19 Watts	6.00 Metres	Galvanised Steel	
Y	2	STREET LIGHTING	WORSLEY CLOSE	IMMINGHAM	518913.15	414624.25	2014	31/03/2014	61237	Urbis	Axia 16 LED 350mA	19 Watts	6.00 Metres	Galvanised Steel	
Y	1	STREET LIGHTING	WORSLEY ROAD	IMMINGHAM	518728.51	414975.03	1991		61238	1 Urbis LED	Teceo 24 LED 500mA	40 Watts	6.00 Metres	Galvanised Steel	
Y	2	STREET LIGHTING	WORSLEY ROAD	IMMINGHAM	518750.48	414952.72	1991		61239	1 Urbis LED	Teceo 24 LED 500mA	40 Watts	6.00 Metres	Galvanised Steel	
Y	3	STREET LIGHTING	WORSLEY ROAD	IMMINGHAM	518759.34	414924.81	1991		61240	1 Urbis LED	Teceo 24 LED 500mA	40 Watts	6.00 Metres	Galvanised Steel	
Y	4	STREET LIGHTING	WORSLEY ROAD	IMMINGHAM	518757.69	414891.67	1991		61241	1 Urbis LED	Teceo 24 LED 500mA	40 Watts	6.00 Metres	Galvanised Steel	
Y	5	STREET LIGHTING	WORSLEY ROAD	IMMINGHAM	518772.37	414865.41	1991		61242	1 Urbis LED	Teceo 24 LED 500mA	40 Watts	6.00 Metres	Galvanised Steel	
Y	6	STREET LIGHTING	WORSLEY ROAD	IMMINGHAM	518798.45	414845.6	1991		61243	1 Urbis LED	Teceo 24 LED 500mA	40 Watts	6.00 Metres	Galvanised Steel	
Y	7	STREET LIGHTING	WORSLEY ROAD	IMMINGHAM	518803.89	414816.42	1991		61244	1 Urbis LED	Teceo 24 LED 500mA	40 Watts	6.00 Metres	Galvanised Steel	
Y	8	STREET LIGHTING	WORSLEY ROAD	IMMINGHAM	518829.46	414796.36	1991		61245	1 Urbis LED	Teceo 24 LED 500mA	40 Watts	6.00 Metres	Galvanised Steel	
Y	9	STREET LIGHTING	WORSLEY ROAD	IMMINGHAM	518833.63	414769.52	1991		61246	1 Urbis LED	Teceo 24 LED 500mA	40 Watts	6.00 Metres	Galvanised Steel	
Y	10	STREET LIGHTING	WORSLEY ROAD	IMMINGHAM	518860.49	414746.75	1991		61247	1 Urbis LED	Teceo 24 LED 500mA	40 Watts	6.00 Metres	Galvanised Steel	
Y	11	STREET LIGHTING	WORSLEY ROAD	IMMINGHAM	518870.21	414717.88	1991		61248	1 Urbis LED	Teceo 24 LED 500mA	40 Watts	6.00 Metres	Galvanised Steel	
Y	12	STREET LIGHTING	WORSLEY ROAD	IMMINGHAM	518874.29	414688.82	1991		61249	1 Urbis LED	Teceo 24 LED 500mA	40 Watts	6.00 Metres	Galvanised Steel	
Y	13	STREET LIGHTING	WORSLEY ROAD	IMMINGHAM	518873.91	414658.37	1991		61250	1 Urbis LED	Teceo 24 LED 500mA	40 Watts	6.00 Metres	Galvanised Steel	
Y	14	STREET LIGHTING	WORSLEY ROAD	IMMINGHAM	518859.1	414630.08	1991		61251	1 Urbis LED	Teceo 24 LED 500mA	40 Watts	6.00 Metres	Galvanised Steel	
Y	15	STREET LIGHTING	WORSLEY ROAD	IMMINGHAM	518863.53	414600.2	1991		61252	1 Urbis LED	Teceo 24 LED 500mA	40 Watts	6.00 Metres	Galvanised Steel	
Y	16	STREET LIGHTING	WORSLEY ROAD	IMMINGHAM	518855.3	414569.76	1991		61253	1 Urbis LED	Teceo 24 LED 500mA	40 Watts	6.00 Metres	Galvanised Steel	
Y	1	STREET LIGHTING	ALDERNEY WAY	IMMINGHAM	518369.9	413969.98	2007		42948	Urbis	Axia 16 LED 350mA	19 Watts	6.00 Metres	Steel	
Y	2	STREET LIGHTING	ALDERNEY WAY	IMMINGHAM	518342.81	413972.63	2007		42949	Urbis	Axia 16 LED 350mA	19 Watts	6.00 Metres	Steel	
Y	3	STREET LIGHTING	ALDERNEY WAY	IMMINGHAM	518318.94	413953.05	2007		42950	Urbis	Axia 16 LED 350mA	19 Watts	6.00 Metres	Steel	
Y	4	STREET LIGHTING	ALDERNEY WAY	IMMINGHAM	518313.78	413924.39	2007		42951	Urbis	Axia 16 LED 350mA	19 Watts	6.00 Metres	Steel	
Y	5	STREET LIGHTING	ALDERNEY WAY	IMMINGHAM	518312.99	413895.28	2007		42952	1 Urbis LED	Axia 16 LED 500mA	28 Watts	6.00 Metres	Steel	
Y	6	STREET LIGHTING	ALDERNEY WAY	IMMINGHAM	518286.48	413861.69	2007		42953	Urbis	Axia 16 LED 350mA	19 Watts	6.00 Metres	Steel	
Y	7	STREET LIGHTING	ALDERNEY WAY	IMMINGHAM	518259.32	413846.84	2007		42954	Urbis	Axia 16 LED 350mA	19 Watts	6.00 Metres	Steel	
Y	1	STREET LIGHTING	ASHTREE CLOSE	IMMINGHAM	518350.65	415069.96	1979		43438	1 Urbis LED	Axia 16 LED 500mA	28 Watts	5.00 Metres	Galvanised Steel	
Y	2	STREET LIGHTING	ASHTREE CLOSE	IMMINGHAM	518384.08	415088.86	1979		43439	1 Urbis LED	Axia 16 LED 500mA	28 Watts	5.00 Metres	Galvanised Steel	
Y	3	STREET LIGHTING	ASHTREE CLOSE	IMMINGHAM	518403.53	415117.6	1979		43440	1 Urbis LED	Axia 16 LED 500mA	28 Watts	5.00 Metres	Galvanised Steel	
Y	4	STREET LIGHTING	ASHTREE CLOSE	IMMINGHAM	518431.96	415126.51	1979		43441	1 Urbis LED	Axia 16 LED 500mA	28 Watts	5.00 Metres	Galvanised Steel	
Y	1	STREET LIGHTING	BOWMAN WAY	IMMINGHAM	517866.4	414210.08	2014	31/03/2014	44457	Urbis	Axia 16 LED 350mA	19 Watts	6.00 Metres	Steel	
Y	2	STREET LIGHTING	BOWMAN WAY	IMMINGHAM	517834.12	414206.35	2014	31/03/2014	44458	1 Urbis LED	Axia 16 LED 500mA	28 Watts	6.00 Metres	Steel	
Y	1	STREET LIGHTING	CLYFTON CRESCENT	IMMINGHAM	517972.85	414613.26	2011		46333	Urbis	Axia 16 LED 350mA	19 Watts	6.00 Metres	Steel	
Y	2	STREET LIGHTING	CLYFTON CRESCENT	IMMINGHAM	517935.81	414602.56	2011		46334	Urbis	Axia 16 LED 350mA	19 Watts	6.00 Metres	Steel	
Y	3	STREET LIGHTING	CLYFTON CRESCENT	IMMINGHAM	517908.18	414587.95	2011		46335	Urbis	Axia 16 LED 350mA	19 Watts	6.00 Metres	Steel	
Y	4	STREET LIGHTING	CLYFTON CRESCENT	IMMINGHAM	517881.86	414574.49	2011		46336	Urbis	Axia 16 LED 350mA	19 Watts	6.00 Metres	Steel	
Y	5	STREET LIGHTING	CLYFTON CRESCENT	IMMINGHAM	517852.3	414567.63	2011		46337	Urbis	Axia 16 LED 350mA	19 Watts	6.00 Metres	Steel	
Y	6	STREET LIGHTING	CLYFTON CRESCENT	IMMINGHAM	517844.1	414546.33	2011		46338	Urbis	Axia 16 LED 350mA	19 Watts	6.00 Metres	Steel	
Y	7	STREET LIGHTING	CLYFTON CRESCENT	IMMINGHAM	517833.25	414593.3	2011		46339	Urbis	Axia 16 LED 350mA	19 Watts	6.00 Metres	Steel	
Y	8	STREET LIGHTING	CLYFTON CRESCENT	IMMINGHAM	517815.48	414611.19	2011		46340	Urbis	Axia 16 LED 350mA	19 Watts	6.00 Metres	Steel	
Y	9	STREET LIGHTING	CLYFTON CRESCENT	IMMINGHAM	517800.73	414643.38	2011		46341	Urbis	Axia 16 LED 350mA	19 Watts	6.00 Metres	Steel	
Y	10	STREET LIGHTING	CLYFTON CRESCENT	IMMINGHAM	517801.89	414667.19	2011		46342	Urbis	Axia 16 LED 350mA	19 Watts	6.00 Metres	Steel	
Y	11	STREET LIGHTING	CLYFTON CRESCENT	IMMINGHAM	517779.43	414689.65	2011		46343	Urbis	Axia 16 LED 350mA	19 Watts	6.00 Metres	Steel	
Y	12	STREET LIGHTING	CLYFTON CRESCENT	IMMINGHAM	517774.37	414720.17	2011		46344	Urbis	Axia 16 LED 350mA	19 Watts	6.00 Metres	Steel	
Y	13	STREET LIGHTING	CLYFTON CRESCENT	IMMINGHAM	517759.91	414751.27	2011		46345	Urbis	Axia 16 LED 350mA	19 Watts	6.00 Metres	Steel	
Y	14	STREET LIGHTING	CLYFTON CRESCENT	IMMINGHAM	517739.15	414776.87	2011		46346	Urbis	Axia 16 LED 350mA	19 Watts	6.00 Metres	Steel	
Y	15	STREET LIGHTING	CLYFTON CRESCENT	IMMINGHAM	517731.2	414813.08	2011		46347	Urbis	Axia 16 LED 350mA	19 Watts	6.00 Metres	Steel	
Y	16	STREET LIGHTING	CLYFTON CRESCENT	IMMINGHAM	517711.58	414850.89	2011		46348	Urbis	Axia 16 LED 350mA	19 Watts	6.00 Metres	Steel	
Y	17	STREET LIGHTING	CLYFTON CRESCENT	IMMINGHAM	517687.21	414879.47	2011		46349	Urbis	Axia 16 LED 350mA	19 Watts	6.00 Metres	Steel	
Y	18	STREET LIGHTING	CLYFTON CRESCENT	IMMINGHAM	517700.79	414908.52	2011		46350	Urbis	Axia 16 LED 350mA	19 Watts	6.00 Metres	Steel	
Y	19	STREET LIGHTING	CLYFTON CRESCENT	IMMINGHAM	517708.84	414934.69	2011		46351	Urbis	Axia 16 LED 350mA	19 Watts	6.00 Metres	Steel	
Y	20	STREET LIGHTING	CLYFTON CRESCENT	IMMINGHAM	517742.91	414957.39	2011		46352	Urbis	Axia 16 LED 350mA	19 Watts	6.00 Metres	Steel	
Y	21	STREET LIGHTING	CLYFTON CRESCENT	IMMINGHAM	517776.4	414967.97	2011		46353	Urbis	Axia 16 LED 350mA	19 Watts	6.00 Metres	Steel	
Y	22	STREET LIGHTING	CLYFTON CRESCENT	IMMINGHAM	517800.73	414991.12	2011		46354	Urbis	Axia 16 LED 350mA	19 Watts	6.00 Metres	Steel	
Y	23	STREET LIGHTING	CLYFTON CRESCENT	IMMINGHAM	517831.48	414979.55	2011		46355	Urbis	Axia 16 LED 350mA	19 Watts	6.00 Metres	Steel	
Y	1	STREET LIGHTING	COLLIER ROAD	IMMINGHAM	518714.47	414474.08	2022	29/06/2022	68934	Urbis	Axia 16 LED 350mA	19 Watts	6.00 Metres	Galvanised Steel	

Y	2	STREET LIGHTING	COLLIER ROAD	IMMINGHAM	518703.34	414500.34	1991		46399	Urbis	Axia 16 LED 350mA	19 Watts	6.00 Metres	Galvanised Steel	
Y	3	STREET LIGHTING	COLLIER ROAD	IMMINGHAM	518684.35	414503.38	1991		46400	Urbis	Axia 16 LED 350mA	19 Watts	6.00 Metres	Galvanised Steel	
Y	4	STREET LIGHTING	COLLIER ROAD	IMMINGHAM	518664.22	414491.04	2014		46401	Urbis	Axia 16 LED 350mA	19 Watts	6.00 Metres	Galvanised Steel	
Y	5	STREET LIGHTING	COLLIER ROAD	IMMINGHAM	518663.84	414518.19	1991		46402	Urbis	Axia 16 LED 350mA	19 Watts	6.00 Metres	Galvanised Steel	
Y	1	STREET LIGHTING	DEANE ROAD	IMMINGHAM	518663.27	414642.4	1991		47399	Urbis	Axia 16 LED 350mA	19 Watts	6.00 Metres	Galvanised Steel	
Y	2	STREET LIGHTING	DEANE ROAD	IMMINGHAM	518635.42	414635.89	1991		47400	Urbis	Axia 16 LED 350mA	19 Watts	6.00 Metres	Galvanised Steel	
Y	3	STREET LIGHTING	DEANE ROAD	IMMINGHAM	518607.45	414624.56	1991		47401	Urbis	Axia 16 LED 350mA	19 Watts	6.00 Metres	Galvanised Steel	
Y	4	STREET LIGHTING	DEANE ROAD	IMMINGHAM	518604.03	414647.09	1991		47402	Urbis	Axia 16 LED 350mA	19 Watts	6.00 Metres	Galvanised Steel	
Y	1	STREET LIGHTING	EATON ROAD	IMMINGHAM	518696.18	414582.48	1993		47788	Urbis	Axia 16 LED 350mA	19 Watts	6.00 Metres	Galvanised Steel	
Y	2	STREET LIGHTING	EATON ROAD	IMMINGHAM	518671.38	414569.25	1993		47789	Urbis	Axia 16 LED 350mA	19 Watts	6.00 Metres	Galvanised Steel	
Y	3	STREET LIGHTING	EATON ROAD	IMMINGHAM	518639.73	414560.33	1993		47790	Urbis	Axia 16 LED 350mA	19 Watts	6.00 Metres	Galvanised Steel	
Y	4	STREET LIGHTING	EATON ROAD	IMMINGHAM	518637.71	414583.05	1993		47791	Urbis	Axia 16 LED 350mA	19 Watts	6.00 Metres	Galvanised Steel	
Y	1	STREET LIGHTING	FAIRISLE RISE	IMMINGHAM	518501.77	413763.61	2014	31/03/2014	48279	1 Urbis LED	Axia 16 LED 500mA	28 Watts	6.00 Metres	Steel	
Y	2	STREET LIGHTING	FAIRISLE RISE	IMMINGHAM	518521.39	413787.47	2014	31/03/2014	48280	1 Urbis LED	Axia 16 LED 500mA	28 Watts	6.00 Metres	Steel	
Y	3	STREET LIGHTING	FAIRISLE RISE	IMMINGHAM	518515.17	413809.57	2014	31/03/2014	48281	1 Urbis LED	Axia 16 LED 500mA	28 Watts	6.00 Metres	Steel	
Y	4	STREET LIGHTING	FAIRISLE RISE	IMMINGHAM	518502.26	413841.03	2014	31/03/2014	48282	1 Urbis LED	Axia 16 LED 500mA	28 Watts	6.00 Metres	Steel	
Y	1	STREET LIGHTING	HINKLEY DRIVE	IMMINGHAM	517865.04	415055.15	2014	31/03/2014	50866	1 Urbis LED	Axia 16 LED 500mA	28 Watts	6.00 Metres	Steel	
Y	2	STREET LIGHTING	HINKLEY DRIVE	IMMINGHAM	517848.59	415094.65	2014	31/03/2014	50867	1 Urbis LED	Axia 16 LED 500mA	28 Watts	6.00 Metres	Steel	
Y	3	STREET LIGHTING	HINKLEY DRIVE	IMMINGHAM	517821	415121.42	2011		50868	1 Urbis LED	Axia 16 LED 500mA	28 Watts	6.00 Metres	Steel	
Y	4	STREET LIGHTING	HINKLEY DRIVE	IMMINGHAM	517804.54	415160.66	2014	31/03/2014	50869	1 Urbis LED	Axia 16 LED 500mA	28 Watts	6.00 Metres	Steel	
Y	1	STREET LIGHTING	HOLBECK PLACE	IMMINGHAM	517753.99	414943.51	2014	31/03/2014	50934	1 Urbis LED	Axia 16 LED 500mA	28 Watts	6.00 Metres	Steel	
Y	2	STREET LIGHTING	HOLBECK PLACE	IMMINGHAM	517772.85	414912.57	2014	31/03/2014	50935	1 Urbis LED	Axia 16 LED 500mA	28 Watts	6.00 Metres	Steel	
Y	3	STREET LIGHTING	HOLBECK PLACE	IMMINGHAM	517780.19	414877.76	2014	31/03/2014	50936	1 Urbis LED	Axia 16 LED 500mA	28 Watts	6.00 Metres	Steel	
Y	1	STREET LIGHTING	HUME BRAE	IMMINGHAM	517613.37	414170.66	1998		51195	Urbis	Axia 16 LED 350mA	19 Watts	6.00 Metres	Galvanised Steel	
Y	2	STREET LIGHTING	HUME BRAE	IMMINGHAM	517650.08	414164.78	2014		51196	Urbis	Axia 16 LED 350mA	19 Watts	6.00 Metres	Galvanised Steel	
Y	3	STREET LIGHTING	HUME BRAE	IMMINGHAM	517678.31	414178.17	1998		51197	Urbis	Axia 16 LED 350mA	19 Watts	6.00 Metres	Galvanised Steel	
Y	4	STREET LIGHTING	HUME BRAE	IMMINGHAM	517703.5	414172.41	1998		51198	Urbis	Axia 16 LED 350mA	19 Watts	6.00 Metres	Galvanised Steel	
Y	5	STREET LIGHTING	HUME BRAE	IMMINGHAM	517731.22	414176.19	1998		51199	Urbis	Axia 16 LED 350mA	19 Watts	6.00 Metres	Galvanised Steel	
Y	6	STREET LIGHTING	HUME BRAE	IMMINGHAM	517753.6	414197.49	1998		51200	Urbis	Axia 16 LED 350mA	19 Watts	6.00 Metres	Galvanised Steel	
Y	7	STREET LIGHTING	HUME BRAE	IMMINGHAM	517756.54	414215.37	1998		51201	Urbis	Axia 16 LED 350mA	19 Watts	6.00 Metres	Galvanised Steel	
Y	8	STREET LIGHTING	HUME BRAE	IMMINGHAM	517768.82	414227.78	1998		51202	Urbis	Axia 16 LED 350mA	19 Watts	6.00 Metres	Galvanised Steel	
Y	9	STREET LIGHTING	HUME BRAE	IMMINGHAM	517762.36	414248.6	1998		51203	Urbis	Axia 16 LED 350mA	19 Watts	6.00 Metres	Galvanised Steel	
Y	10	STREET LIGHTING	HUME BRAE	IMMINGHAM	517782.61	414257.01	1998		51204	Urbis	Axia 16 LED 350mA	19 Watts	6.00 Metres	Galvanised Steel	
Y	11	STREET LIGHTING	HUME BRAE	IMMINGHAM	517812.86	414267.9	1998		51205	Urbis	Axia 16 LED 350mA	19 Watts	6.00 Metres	Galvanised Steel	
Y	12	STREET LIGHTING	HUME BRAE	IMMINGHAM	517839.19	414274.16	1998		51206	Urbis	Axia 16 LED 350mA	19 Watts	6.00 Metres	Galvanised Steel	
Y	13	STREET LIGHTING	HUME BRAE	IMMINGHAM	517865.01	414288.4	1998		51207	Urbis	Axia 16 LED 350mA	19 Watts	6.00 Metres	Galvanised Steel	
Y	14	STREET LIGHTING	HUME BRAE	IMMINGHAM	517894.78	414288.92	1998		51208	Urbis	Axia 16 LED 350mA	19 Watts	6.00 Metres	Galvanised Steel	
Y	1	STREET LIGHTING	KINGS ROAD	IMMINGHAM	519196.55	415269.66	1984		51793	1 Urbis LED	Teceo 48 LED 700mA	104 Watts	10.00 Metres	Galvanised Steel	
Y	2	STREET LIGHTING	KINGS ROAD	IMMINGHAM	519222.51	415238.79	2020	10/06/2020	67881	Urbis	Teceo 48 LED 700mA	104 Watts	10.00 Metres	Galvanised Steel	
Y	3	STREET LIGHTING	KINGS ROAD	IMMINGHAM	519237.81	415212.95	1984		51795	1 Urbis LED	Teceo 48 LED 700mA	104 Watts	10.00 Metres	Galvanised Steel	
Y	4	STREET LIGHTING	KINGS ROAD	IMMINGHAM	519254.39	415186.81	1984		51796	1 Urbis LED	Teceo 48 LED 700mA	104 Watts	10.00 Metres	Galvanised Steel	
Y	5	STREET LIGHTING	KINGS ROAD	IMMINGHAM	519272.49	415159.15	1986		51797	1 Urbis LED	Teceo 48 LED 700mA	104 Watts	10.00 Metres	Galvanised Steel	
Y	6	STREET LIGHTING	KINGS ROAD	IMMINGHAM	519276.54	415126.75	1986		51798	1 Urbis LED	Teceo 48 LED 700mA	104 Watts	10.00 Metres	Galvanised Steel	
Y	7	STREET LIGHTING	KINGS ROAD	IMMINGHAM	519309.2	415104.28	2015	09/03/2015	51799	1 Urbis LED	Teceo 48 LED 700mA	104 Watts	10.00 Metres	Galvanised Steel	
Y	8	STREET LIGHTING	KINGS ROAD	IMMINGHAM	519318.31	415066.18	1986		51800	1 Urbis LED	Teceo 48 LED 700mA	104 Watts	10.00 Metres	Galvanised Steel	
Y	9	STREET LIGHTING	KINGS ROAD	IMMINGHAM	519534.82	415041.74	2021	28/04/2021	68430	Urbis	Teceo 48 LED 700mA	104 Watts	10.00 Metres	Galvanised Steel	
Y	10	STREET LIGHTING	KINGS ROAD	IMMINGHAM	519360.59	415004.93	1986	18/12/2013	51802	1 Urbis LED	Teceo 48 LED 700mA	104 Watts	10.00 Metres	Galvanised Steel	
Y	11	STREET LIGHTING	KINGS ROAD	IMMINGHAM	519391.78	414986.2	1986		51803	1 Urbis LED	Teceo 48 LED 700mA	104 Watts	10.00 Metres	Galvanised Steel	
Y	12	STREET LIGHTING	KINGS ROAD	IMMINGHAM	519399.68	414949.44	1986		51804	1 Urbis LED	Teceo 48 LED 700mA	104 Watts	10.00 Metres	Galvanised Steel	
Y	13	STREET LIGHTING	KINGS ROAD	IMMINGHAM	519425.81	414935.46	1986		51805	1 Urbis LED	Teceo 48 LED 700mA	104 Watts	10.00 Metres	Galvanised Steel	
Y	14	STREET LIGHTING	KINGS ROAD	IMMINGHAM	519433.3	414901.34	1986		51806	1 Urbis LED	Teceo 48 LED 700mA	104 Watts	10.00 Metres	Galvanised Steel	
Y	15	STREET LIGHTING	KINGS ROAD	IMMINGHAM	519462.47	414882.8	1986		51807	1 Urbis LED	Teceo 48 LED 700mA	104 Watts	10.00 Metres	Galvanised Steel	
Y	16	STREET LIGHTING	KINGS ROAD	IMMINGHAM	519466.92	414850.58	1986		51808	1 Urbis LED	Teceo 48 LED 700mA	104 Watts	10.00 Metres	Galvanised Steel	
Y	17	STREET LIGHTING	KINGS ROAD	IMMINGHAM	519493.66	414832.86	1986		51809	1 Urbis LED	Teceo 48 LED 700mA	104 Watts	10.00 Metres	Galvanised Steel	
Y	18	STREET LIGHTING	KINGS ROAD	IMMINGHAM	519497.91	414797.42	1986		51810	Urbis	Ampera 48 LED 700mA	104 Watts	10.00 Metres	Galvanised Steel	
Y	19	STREET LIGHTING	KINGS ROAD	IMMINGHAM	519522.62	414775.14	1986		51811	1 Urbis LED	Teceo 48 LED 700mA	104 Watts	10.00 Metres	Galvanised Steel	
Y	20	STREET LIGHTING	KINGS ROAD	IMMINGHAM	519530.32	414743.04	2024	03/10/2024	51812	Urbis	Teceo 48 LED 700mA	104 Watts	12.00 Metres	Galvanised Steel	
Y	20	STREET LIGHTING	KINGS ROAD	IMMINGHAM	519530.32	414743.04	1986		62943	1 Urbis LED	Teceo 48 LED 700mA	104 Watts	10.00 Metres	Galvanised Steel	
Y	21	STREET LIGHTING	KINGS ROAD	IMMINGHAM	519569.21	414736.26	1986		51813	1 Urbis LED	Teceo 48 LED 700mA	104 Watts	10.00 Metres	Galvanised Steel	
Y	21	STREET LIGHTING	KINGS ROAD	IMMINGHAM	519569.21	414736.26	1986		62944	1 Urbis LED	Teceo 48 LED 700mA	104 Watts	10.00 Metres	Galvanised Steel	
Y	22	STREET LIGHTING	KINGS ROAD	IMMINGHAM	519595.69	414748.55	1986		51814	1 Urbis LED	Teceo 48 LED 700mA	104 Watts	10.00 Metres	Galvanised Steel	
Y	23	STREET LIGHTING	KINGS ROAD	IMMINGHAM	519619.43	414779.41	1986		51815	1 Urbis LED	Teceo 48 LED 700mA	104 Watts	10.00 Metres	Galvanised Steel	
Y	24	STREET LIGHTING	KINGS ROAD	IMMINGHAM	519646.65	414796.75	1986		51816	1 Urbis LED	Teceo 48 LED 700mA	104 Watts	10.00 Metres	Galvanised Steel	
Y	25	STREET LIGHTING	KINGS ROAD	IMMINGHAM	519683.13	414802.94	1986		51817	1 Urbis LED	Teceo 48 LED 700mA	104 Watts	10.00 Metres	Galvanised Steel	
Y	26	STREET LIGHTING	KINGS ROAD	IMMINGHAM	519704.01	414833.95	1986		51818	1 Urbis LED	Teceo 48 LED 700mA	104 Watts	10.00 Metres	Galvanised Steel	
Y	27	STREET LIGHTING	KINGS ROAD	IMMINGHAM	519739.56	414841.2	2016		51819	1 Urbis LED	Teceo 48 LED 700mA	104 Watts	10.00 Metres	Galvanised Steel	
Y	28	STREET LIGHTING	KINGS ROAD	IMMINGHAM	519760.06	414869.94	1984		51820	1 Urbis LED	Teceo 48 LED 700mA	104 Watts	10.00 Metres	Galvanised Steel	
Y	29	STREET LIGHTING	KINGS ROAD	IMMINGHAM	519792.44	414875.6	2016		51821	1 Urbis LED	Teceo 48 LED 700mA	104 Watts	10.00 Metres	Galvanised Steel	
Y	30	STREET LIGHTING	KINGS ROAD	IMMINGHAM	519821	414889.37	2016		51822	1 Urbis LED	Teceo 48 LED 700mA	104 Watts	10.00 Metres	Galvanised Steel	
Y	31	STREET LIGHTING	KINGS ROAD	IMMINGHAM	519845.99	414915.46	1984		51823	1 Urbis LED	Teceo 48 LED 700mA	104 Watts	10.00 Metres	Galvanised Steel	
Y	32	STREET LIGHTING	KINGS ROAD	IMMINGHAM	519871.91	414924.79	1984		51824	1 Urbis LED	Teceo 48 LED 700mA	104 Watts	10.00 Metres	Galvanised Steel	
Y	1	STREET LIGHTING	MAGNOLIA RISE	IMMINGHAM	518204	414119	2001		53076	Urbis	Axia 16 LED 350mA	19 Watts	6.00 Metres	Galvanised Steel	
Y	2	STREET LIGHTING	MAGNOLIA RISE	IMMINGHAM	518200	414148	2001		53077	Urbis	Axia 16 LED 350mA	19 Watts	6.00 Metres	Galvanised Steel	
Y	3	STREET LIGHTING	MAGNOLIA RISE	IMMINGHAM	518181	414159	2001		53078	Urbis	Axia 16 LED 350mA	19 Watts	6.00 Metres	Galvanised Steel	
Y	4	STREET LIGHTING	MAGNOLIA RISE	IMMINGHAM	518161	414166	2001		53079	Urbis	Axia 16 LED 350mA	19 Watts	6.00 Metres	Galvanised Steel	
Y	5	STREET LIGHTING	MAGNOLIA RISE	IMMINGHAM	518140	414165	2001		53080	Urbis	Axia 16 LED 350mA	19 Watts	6.00 Metres	Galvanised Steel	
Y	6	STREET LIGHTING	MAGNOLIA RISE	IMMINGHAM	518112	414147	2001		53081	Urbis	Axia 16 LED 350mA	19 Watts	6.00 Metres	Galvanised Steel	
Y	7	STREET LIGHTING	MAGNOLIA RISE	IMMINGHAM	518089	414134	2001		53082	Urbis	Axia 16 LED 350mA	19 Watts	6.00 Metres	Galvanised Steel	
Y	8	STREET LIGHTING	MAGNOLIA RISE	IMMINGHAM	518060	414119	2001		53083	Urbis	Axia 16 LED 350mA	19 Watts	6.00 Metres	Galvanised Steel	
Y	9	STREET LIGHTING	MAGNOLIA RISE	IMMINGHAM	518068	414139	2001		53084	Urbis	Axia 16 LED 350mA	19 Watts	6.00 Metres	Galvanised Steel	
Y	1	STREET LIGHTING	MANBY ROAD	IMMINGHAM	518793.4	415104.66	1991		53128	1 Urbis LED	Teceo 48 LED 700mA	104 Watts	10.00 Metres	Galvanised Steel	
Y	2	STREET LIGHTING	MANBY ROAD	IMMINGHAM	518778.63	415145.24	1991		53129	1 Urbis LED	Teceo 48 LED 700mA	104 Watts	10.00 Metres	Galvanised Steel	
Y	3	STREET LIGHTING	MANBY ROAD	IMMINGHAM	518758.58	415173.29	1991		53130	1 Urbis LED	Teceo 48 LED 700mA	104 Watts	10.00 Metres	Galvanised Steel	
Y	4	STREET LIGHTING	MANBY ROAD	IMMINGHAM	518737.11	415202.05	1991		53131	1 Urbis LED	Teceo 48 LED 700mA	104 Watts	10.00 Metres	Galvanised Steel	
Y	5	STREET LIGHTING	MANBY ROAD	IMMINGHAM	518715.85	415231.21	1991		53132	1 Urbis LED	Teceo 48 LED 700mA	104 Watts	10.00 Metres	Galvanised Steel	
Y	6	STREET LIGHTING	MANBY ROAD	IMMINGHAM	518700.05	415252.98	2003		53133	1 Urbis LED	Teceo 48 LED 700mA	104 Watts	10.00 Metres	Stainless Steel	
Y	7	STREET LIGHTING	MANBY ROAD	IMMINGHAM	518668.66	415273.74	1991		53134	1 Urbis LED	Teceo 48 LED 700mA	104 Watts	10.00 Metres	Galvanised Steel	
Y	8	STREET LIGHTING	MANBY ROAD	IMMINGHAM	518658.33	415309.28	1991		53135	1 Urbis LED	Teceo 48 LED 700mA	104 Watts	10.00 Metres	Galvanised Steel	
Y	9	STREET LIGHTING	MANBY ROAD	IMMINGHAM	518637.46	415336.12	1991		53136	1 Urbis LED	Teceo 48 LED 700mA	104 Watts	10.00 Metres	Galvanised Steel	
Y	10	STREET LIGHTING	MANBY ROAD	IMMINGHAM	518621.87	415358.09	1991		53137	1 Urbis LED	Teceo 48 LED 700mA	104 Watts	10.00 Metres	Galvanised Steel	
Y	11	STREET LIGHTING	MANBY ROAD	IMMINGHAM	518592.1	415378.85	1991		53138	1 Urbis LED	Teceo 48 LED 700mA	104 Watts	10.00 Metres	Galvanised Steel	
Y	12	STREET LIGHTING	MANBY ROAD	IMMINGHAM	518574.27	415402.65	1991		53139	1 Urbis LED	Teceo 48 LED 700mA	104 Watts	10.00 Metres	Galvanised Steel	
Y	13	STREET LIGHTING	MANBY ROAD	IMMINGHAM	518549.16	415437.79	1991		53140	1 Urbis LED	Teceo 48 LED 700mA	104 Watts	10.00 Metres	Galvanised Steel	
Y	14	STREET LIGHTING	MANBY ROAD	IMMINGHAM	518526.33	415472.13	2023	30/11/2023	69369	Urbis	Teceo 48 LED 700mA	104 Watts	12.00 Metres	Galvanised Steel	
Y	15	STREET LIGHTING	MANBY ROAD	IMMINGHAM	518508.49	415511.21	2009		53142	1 Urbis LED	Teceo 48 LED 700mA	104 Watts	12.00 Metres	Galvanised Steel	
Y	16	STREET LIGHTING	MANBY ROAD	IMMINGHAM	518487.9	415539.87	1991		53143	1 Urbis LED	Teceo 48 LED 700mA	104 Watts	10.00 Metres	Galvanised Steel	
Y	17	STREET LIGHTING	MANBY ROAD	IMMINGHAM	518466.43	415569.13	1991		53144	1 Urbis LED	Teceo 48 LED 700mA	104 Watts	10.00 Metres	Galvanised Steel	
Y	18	STREET LIGHTING	MANBY ROAD	IMMINGHAM	518445.98	415597.18	1991		53145	1 Urbis LED	Teceo 48 LED 700mA	104 Watts	10.00 Metres	Galvanised Steel	
Y	19	STREET LIGHTING	MANBY ROAD	IMMINGHAM	518425.41	415626.38	2024	28/02/2024	69839	Urbis	Ampera Maxi 80 LED 700m	163 Watts	12.00 Metres	Galvanised Steel	
Y	20	STREET LIGHTING	MANBY ROAD	IMMINGHAM	518406.78	415649.38	1991		53147	Urbis	mpera Maxi 128 LED 700m	277 Watts	10.00 Metres	Galvanised Steel	
Y	21	STREET LIGHTING	MANBY ROAD	IMMINGHAM	518378.83	415669.23	2007		53148	1 Urbis LED	Teceo 48 LED 700mA	104 Watts	10.00 Metres	Steel	
Y	22	STREET LIGHTING	MANBY ROAD	IMMINGHAM	518371.34	415697.28	2009		53149	1 Urbis LED	Teceo 48 LED 700mA	104 Watts	10.00 Metres	Galvanised Steel	
Y	23	STREET LIGHTING	MANBY ROAD	IMMINGHAM	518353.08	415721.69	2024	01/03/2024	69838	Urbis	Ampera Maxi 80 LED 700m	163 Watts	12.00 Metres	Galvanised Steel	
Y	24	STREET LIGHTING	MANBY ROAD	IMMINGHAM	518337.72	415744.47	1991		53151	1 Urbis LED	Teceo 48 LED 700mA	104 Watts	10.00 Metres	Galvanised Steel	
Y	25	STREET LIGHTING	MANBY ROAD	IMMINGHAM	518317.47	415757.53	1991		53152	1 Urbis LED	Teceo 48 LED 700mA	104 Watts	10.00 Metres	Galvanised Steel	
Y	26	STREET LIGHTING	MANBY ROAD	IMMINGHAM	518293.26	415754.4	1991		53153	1 Urbis LED	Teceo 48 LED 700mA	104 Watts	10.00 Metres	Galvanised Steel	
Y	27	STREET LIGHTING	MANBY ROAD	IMMINGHAM	518281.93	415783.72	1991		53154	1 Urbis LED	Teceo 48 LED 700mA	104 Watts	10.00 Metres	Galvanised Steel	
Y	28	STREET LIGHTING	MANBY ROAD	IMMINGHAM	518271.6	415772.38	2004		53155	1 Urbis LED	Teceo 48 LED 700mA	104 Watts	10.00 Metres	Stainless Steel	
Y	29	STREET LIGHTING	MANBY ROAD	IMMINGHAM	518248.52	415806.1	1991		53156	1 Urbis LED	Teceo 48 LED 700mA	104 Watts	10.00 Metres	Galvanised Steel	
Y	30	STREET LIGHTING	MANBY ROAD	IMMINGHAM	518239	415792.94	2007		53157	1 Urbis LED	Teceo 48 LED 700mA	104 Watts	10.00 Metres	Galvanised Steel	

Y	31	STREET LIGHTING	MANBY ROAD	IMMINGHAM	518216.72	415827.87	2007		53158	1 Urbis LED	Teceo 48 LED 700mA	104 Watts	10.00 Metres	Steel	
Y	32	STREET LIGHTING	MANBY ROAD	IMMINGHAM	518203.56	415812.28	1991		53159	1 Urbis LED	Teceo 48 LED 700mA	104 Watts	10.00 Metres	Galvanised Steel	
Y	33	STREET LIGHTING	MANBY ROAD	IMMINGHAM	518185.89	415848.84	1991		53160	1 Urbis LED	Teceo 48 LED 700mA	104 Watts	10.00 Metres	Galvanised Steel	
Y	34	STREET LIGHTING	MANBY ROAD	IMMINGHAM	518161.59	415839.72	1991		53161	1 Urbis LED	Teceo 48 LED 700mA	104 Watts	10.00 Metres	Galvanised Steel	
Y	35	STREET LIGHTING	MANBY ROAD	IMMINGHAM	518124.53	415878.52	2003		61792	1 Urbis LED	Teceo 48 LED 700mA	104 Watts	10.00 Metres	Stainless Steel	
Y	35	STREET LIGHTING	MANBY ROAD	IMMINGHAM	518124.53	415878.52	2003		62324	1 Urbis LED	Teceo 48 LED 700mA	104 Watts	10.00 Metres	Stainless Steel	
Y	36	STREET LIGHTING	MANBY ROAD	IMMINGHAM	518084.23	415905.05	2003		61793	1 Urbis LED	Teceo 48 LED 700mA	104 Watts	10.00 Metres	Stainless Steel	
Y	36	STREET LIGHTING	MANBY ROAD	IMMINGHAM	518084.23	415905.05	2003		62325	1 Urbis LED	Teceo 48 LED 700mA	104 Watts	10.00 Metres	Stainless Steel	
Y	37	STREET LIGHTING	MANBY ROAD	IMMINGHAM	518043.32	415933.1	2003		61794	1 Urbis LED	Teceo 48 LED 700mA	104 Watts	10.00 Metres	Stainless Steel	
Y	37	STREET LIGHTING	MANBY ROAD	IMMINGHAM	518043.32	415933.1	2003		62326	1 Urbis LED	Teceo 48 LED 700mA	104 Watts	10.00 Metres	Stainless Steel	
Y	38	STREET LIGHTING	MANBY ROAD	IMMINGHAM	518003.62	415960.55	2003		61795	1 Urbis LED	Teceo 48 LED 700mA	104 Watts	10.00 Metres	Stainless Steel	
Y	38	STREET LIGHTING	MANBY ROAD	IMMINGHAM	518003.62	415960.55	2003		62327	1 Urbis LED	Teceo 48 LED 700mA	104 Watts	10.00 Metres	Stainless Steel	
Y	39	STREET LIGHTING	MANBY ROAD	IMMINGHAM	517963.52	415987.59	2003		61796	1 Urbis LED	Teceo 48 LED 700mA	104 Watts	10.00 Metres	Stainless Steel	
Y	39	STREET LIGHTING	MANBY ROAD	IMMINGHAM	517963.52	415987.59	2003		62328	1 Urbis LED	Teceo 48 LED 700mA	104 Watts	10.00 Metres	Stainless Steel	
Y	40	STREET LIGHTING	MANBY ROAD	IMMINGHAM	517923.83	416014.42	2003		61797	1 Urbis LED	Teceo 48 LED 700mA	104 Watts	10.00 Metres	Stainless Steel	
Y	40	STREET LIGHTING	MANBY ROAD	IMMINGHAM	517923.83	416014.42	2003		62329	1 Urbis LED	Teceo 48 LED 700mA	104 Watts	10.00 Metres	Stainless Steel	
Y	41	STREET LIGHTING	MANBY ROAD	IMMINGHAM	517883.73	416041.56	2003		61798	1 Urbis LED	Teceo 48 LED 700mA	104 Watts	10.00 Metres	Stainless Steel	
Y	41	STREET LIGHTING	MANBY ROAD	IMMINGHAM	517883.73	416041.56	2003		62330	1 Urbis LED	Teceo 48 LED 700mA	104 Watts	10.00 Metres	Stainless Steel	
Y	42	STREET LIGHTING	MANBY ROAD	IMMINGHAM	517843.22	416069.41	2003		61799	1 Urbis LED	Teceo 48 LED 700mA	104 Watts	10.00 Metres	Stainless Steel	
Y	42	STREET LIGHTING	MANBY ROAD	IMMINGHAM	517843.22	416069.41	2003		62331	1 Urbis LED	Teceo 48 LED 700mA	104 Watts	10.00 Metres	Stainless Steel	
Y	43	STREET LIGHTING	MANBY ROAD	IMMINGHAM	517802.92	416097.26	2003		61800	1 Urbis LED	Teceo 48 LED 700mA	104 Watts	10.00 Metres	Stainless Steel	
Y	43	STREET LIGHTING	MANBY ROAD	IMMINGHAM	517802.92	416097.26	2003		62332	1 Urbis LED	Teceo 48 LED 700mA	104 Watts	10.00 Metres	Stainless Steel	
Y	44	STREET LIGHTING	MANBY ROAD	IMMINGHAM	517763.22	416123.79	2003		61801	1 Urbis LED	Teceo 48 LED 700mA	104 Watts	10.00 Metres	Stainless Steel	
Y	44	STREET LIGHTING	MANBY ROAD	IMMINGHAM	517763.22	416123.79	2003		62333	1 Urbis LED	Teceo 48 LED 700mA	104 Watts	10.00 Metres	Stainless Steel	
Y	45	STREET LIGHTING	MANBY ROAD	IMMINGHAM	517723.12	416150.63	2003		61802	1 Urbis LED	Teceo 48 LED 700mA	104 Watts	10.00 Metres	Stainless Steel	
Y	45	STREET LIGHTING	MANBY ROAD	IMMINGHAM	517723.12	416150.63	2003		62334	1 Urbis LED	Teceo 48 LED 700mA	104 Watts	10.00 Metres	Stainless Steel	
Y	46	STREET LIGHTING	MANBY ROAD	IMMINGHAM	517682.82	416177.87	2003		61803	1 Urbis LED	Teceo 48 LED 700mA	104 Watts	10.00 Metres	Stainless Steel	
Y	46	STREET LIGHTING	MANBY ROAD	IMMINGHAM	517682.82	416177.87	2003		62335	1 Urbis LED	Teceo 48 LED 700mA	104 Watts	10.00 Metres	Stainless Steel	
Y	1	STREET LIGHTING	MAPLE GROVE	IMMINGHAM	518226.44	415075.65	2014	31/03/2014	53239	1 Urbis LED	Axia 16 LED 500mA	28 Watts	6.00 Metres	Steel	
Y	2	STREET LIGHTING	MAPLE GROVE	IMMINGHAM	518213.4	415101.41	2014	31/03/2014	53240	1 Urbis LED	Axia 16 LED 500mA	28 Watts	6.00 Metres	Steel	
Y	3	STREET LIGHTING	MAPLE GROVE	IMMINGHAM	518176.44	415113.31	2014	31/03/2014	53241	1 Urbis LED	Axia 16 LED 500mA	28 Watts	6.00 Metres	Steel	
Y	1	STREET LIGHTING	MIDDLEPLATT ROAD	IMMINGHAM	519124.22	415368.81	2009		53559	1 Urbis LED	Teceo 40 LED 500mA	64 Watts	6.00 Metres	Steel	
Y	2	STREET LIGHTING	MIDDLEPLATT ROAD	IMMINGHAM	519157.01	415399.94	2009		53560	1 Urbis LED	Teceo 40 LED 500mA	64 Watts	6.00 Metres	Steel	
Y	3	STREET LIGHTING	MIDDLEPLATT ROAD	IMMINGHAM	519318.99	415275.62	2009		53566	1 Urbis LED	Teceo 40 LED 500mA	64 Watts	6.00 Metres	Steel	
Y	4	STREET LIGHTING	MIDDLEPLATT ROAD	IMMINGHAM	519196.37	415409.38	2009		53561	1 Urbis LED	Teceo 40 LED 500mA	64 Watts	6.00 Metres	Steel	
Y	5	STREET LIGHTING	MIDDLEPLATT ROAD	IMMINGHAM	519226.57	415388.12	2009		53562	1 Urbis LED	Teceo 40 LED 500mA	64 Watts	6.00 Metres	Steel	
Y	6	STREET LIGHTING	MIDDLEPLATT ROAD	IMMINGHAM	519254.92	415363.63	2009		53563	1 Urbis LED	Teceo 40 LED 500mA	64 Watts	6.00 Metres	Steel	
Y	7	STREET LIGHTING	MIDDLEPLATT ROAD	IMMINGHAM	519280.95	415336.03	2009		53564	1 Urbis LED	Teceo 40 LED 500mA	64 Watts	6.00 Metres	Steel	
Y	8	STREET LIGHTING	MIDDLEPLATT ROAD	IMMINGHAM	519304.63	415303.88	2009		53565	1 Urbis LED	Teceo 40 LED 500mA	64 Watts	6.00 Metres	Steel	
Y	9	STREET LIGHTING	MIDDLEPLATT ROAD	IMMINGHAM	519167.28	415427.52	2009		61809	1 Urbis LED	Teceo 40 LED 500mA	64 Watts	6.00 Metres	Steel	
Y	9	STREET LIGHTING	MIDDLEPLATT ROAD	IMMINGHAM	519167.28	415427.52	2009		62341	1 Urbis LED	Teceo 40 LED 500mA	64 Watts	6.00 Metres	Steel	
Y	10	STREET LIGHTING	MIDDLEPLATT ROAD	IMMINGHAM	519139.51	415443.62	2009		53567	1 Urbis LED	Teceo 40 LED 500mA	64 Watts	6.00 Metres	Steel	
Y	11	STREET LIGHTING	MIDDLEPLATT ROAD	IMMINGHAM	519111.9	415460.29	2009		53568	1 Urbis LED	Teceo 40 LED 500mA	64 Watts	6.00 Metres	Steel	
Y	12	STREET LIGHTING	MIDDLEPLATT ROAD	IMMINGHAM	519083.31	415476.08	2009		53569	1 Urbis LED	Teceo 40 LED 500mA	64 Watts	6.00 Metres	Steel	
Y	13	STREET LIGHTING	MIDDLEPLATT ROAD	IMMINGHAM	519056.63	415483.92	2009		61810	1 Urbis LED	Teceo 40 LED 500mA	64 Watts	6.00 Metres	Steel	
Y	13	STREET LIGHTING	MIDDLEPLATT ROAD	IMMINGHAM	519056.63	415483.92	2009		62342	1 Urbis LED	Teceo 40 LED 500mA	64 Watts	6.00 Metres	Steel	
Y	1	STREET LIGHTING	MORTON CLOSE	IMMINGHAM	517684.62	414919.85	2014	31/03/2014	53873	Urbis	Axia 16 LED 350mA	19 Watts	6.00 Metres	Steel	
Y	2	STREET LIGHTING	MORTON CLOSE	IMMINGHAM	517659.81	414929.53	2014	31/03/2014	53874	Urbis	Axia 16 LED 350mA	19 Watts	6.00 Metres	Steel	
Y	3	STREET LIGHTING	MORTON CLOSE	IMMINGHAM	517645.64	414956.08	2014	31/03/2014	53875	Urbis	Axia 16 LED 350mA	19 Watts	6.00 Metres	Steel	
Y	4	STREET LIGHTING	MORTON CLOSE	IMMINGHAM	517638.55	414991.52	2014	31/03/2014	53876	Urbis	Axia 16 LED 350mA	19 Watts	6.00 Metres	Steel	
Y	5	STREET LIGHTING	MORTON CLOSE	IMMINGHAM	517659.69	414992.03	2014	31/03/2014	53877	Urbis	Axia 16 LED 350mA	19 Watts	6.00 Metres	Steel	
Y	6	STREET LIGHTING	MORTON CLOSE	IMMINGHAM	517644.37	415025.38	2014	31/03/2014	53878	Urbis	Axia 16 LED 350mA	19 Watts	6.00 Metres	Steel	
Y	7	STREET LIGHTING	MORTON CLOSE	IMMINGHAM	517690.45	414997.79	2014	31/03/2014	53879	Urbis	Axia 16 LED 350mA	19 Watts	6.00 Metres	Steel	
Y	8	STREET LIGHTING	MORTON CLOSE	IMMINGHAM	517708.93	415018.23	2014	31/03/2014	53880	Urbis	Axia 16 LED 350mA	19 Watts	6.00 Metres	Steel	
Y	1	STREET LIGHTING	MULLWAY	IMMINGHAM	518318.24	413788.17	1989		53911	Urbis	Axia 16 LED 350mA	19 Watts	5.00 Metres	Galvanised Steel	
Y	2	STREET LIGHTING	MULLWAY	IMMINGHAM	518327.35	413761.65	1989		53912	Urbis	Axia 16 LED 350mA	19 Watts	5.00 Metres	Galvanised Steel	
Y	3	STREET LIGHTING	MULLWAY	IMMINGHAM	518349.38	413750.45	1991		53913	Urbis	Axia 16 LED 350mA	19 Watts	5.00 Metres	Galvanised Steel	
Y	4	STREET LIGHTING	MULLWAY	IMMINGHAM	518371.91	413727.6	1991		53914	Urbis	Axia 16 LED 350mA	19 Watts	5.00 Metres	Galvanised Steel	
Y	5	STREET LIGHTING	MULLWAY	IMMINGHAM	518401.03	413732.22	1991		53915	Urbis	Axia 16 LED 350mA	19 Watts	5.00 Metres	Galvanised Steel	
Y	6	STREET LIGHTING	MULLWAY	IMMINGHAM	518426.34	413721.91	1991		53916	Urbis	Axia 16 LED 350mA	19 Watts	5.00 Metres	Galvanised Steel	
Y	7	STREET LIGHTING	MULLWAY	IMMINGHAM	518454.19	413722.48	1991		53917	Urbis	Axia 16 LED 350mA	19 Watts	5.00 Metres	Galvanised Steel	
Y	1	STREET LIGHTING	PADDOCK COURT	IMMINGHAM	517947.28	414038.56	1978		54571	Urbis	Axia 16 LED 350mA	19 Watts	5.00 Metres	Galvanised Steel	
Y	2	STREET LIGHTING	PADDOCK COURT	IMMINGHAM	517976.02	414046.35	1978		54572	Urbis	Axia 16 LED 350mA	19 Watts	5.00 Metres	Galvanised Steel	
Y	3	STREET LIGHTING	PADDOCK COURT	IMMINGHAM	518003.36	414066.16	1978		54573	Urbis	Axia 16 LED 350mA	19 Watts	5.00 Metres	Galvanised Steel	
Y	4	STREET LIGHTING	PADDOCK COURT	IMMINGHAM	518019.56	414087.61	1978		54574	Urbis	Axia 8 LED 350mA	10 Watts	5.00 Metres	Galvanised Steel	
Y	1	STREET LIGHTING	ORKNEY PLACE	IMMINGHAM	518465.02	413959.33	2014	31/03/2014	54460	1 Urbis LED	Axia 16 LED 500mA	28 Watts	6.00 Metres	Steel	
Y	2	STREET LIGHTING	ORKNEY PLACE	IMMINGHAM	518467.29	413995.22	2014	31/03/2014	54461	1 Urbis LED	Axia 16 LED 500mA	28 Watts	6.00 Metres	Steel	
Y	3	STREET LIGHTING	ORKNEY PLACE	IMMINGHAM	518453.88	414026.86	2014	31/03/2014	54462	1 Urbis LED	Axia 16 LED 500mA	28 Watts	6.00 Metres	Steel	
Y	1	STREET LIGHTING	PERTH WAY	IMMINGHAM	517861.97	413928.45	2014	31/03/2014	55341	Urbis	Axia 16 LED 350mA	19 Watts	6.00 Metres	Steel	
Y	2	STREET LIGHTING	PERTH WAY	IMMINGHAM	517875.64	413968.83	2014	31/03/2014	55342	Urbis	Axia 16 LED 350mA	19 Watts	6.00 Metres	Steel	
Y	3	STREET LIGHTING	PERTH WAY	IMMINGHAM	517887.79	413936.36	2014	31/03/2014	55343	Urbis	Axia 16 LED 350mA	19 Watts	6.00 Metres	Steel	
Y	4	STREET LIGHTING	PERTH WAY	IMMINGHAM	517871.85	414000.79	2014		55344	Urbis	Axia 8 LED 350mA	10 Watts	6.00 Metres	Steel	
Y	1	STREET LIGHTING	PRINCESS STREET	IMMINGHAM	518286.56	414618.84	2008		55646	1 Urbis LED	Axia 16 LED 500mA	28 Watts	6.00 Metres	Galvanised Steel	
Y	2	STREET LIGHTING	PRINCESS STREET	IMMINGHAM	518301.12	414592.68	2008		55647	1 Urbis LED	Axia 16 LED 500mA	28 Watts	6.00 Metres	Galvanised Steel	
Y	3	STREET LIGHTING	PRINCESS STREET	IMMINGHAM	518317.68	414562.24	2008		55648	1 Urbis LED	Axia 16 LED 500mA	28 Watts	6.00 Metres	Galvanised Steel	
Y	4	STREET LIGHTING	PRINCESS STREET	IMMINGHAM	518325.71	414530.48	2008		55649	1 Urbis LED	Axia 16 LED 500mA	28 Watts	6.00 Metres	Galvanised Steel	
Y	5	STREET LIGHTING	PRINCESS STREET	IMMINGHAM	518348.81	414505.79	2008		55650	1 Urbis LED	Axia 16 LED 500mA	28 Watts	6.00 Metres	Galvanised Steel	
Y	6	STREET LIGHTING	PRINCESS STREET	IMMINGHAM	518362.11	414481.72	2008		55651	1 Urbis LED	Axia 16 LED 500mA	28 Watts	6.00 Metres	Galvanised Steel	
Y	7	STREET LIGHTING	PRINCESS STREET	IMMINGHAM	518377.88	414452.28	2006		55652	1 Urbis LED	Axia 16 LED 500mA	28 Watts	6.00 Metres	Galvanised Steel	
Y	8	STREET LIGHTING	PRINCESS STREET	IMMINGHAM	518388.59	414423.16	2006		55653	1 Urbis LED	Axia 16 LED 500mA	28 Watts	6.00 Metres	Galvanised Steel	
Y	9	STREET LIGHTING	PRINCESS STREET	IMMINGHAM	518387.35	414395.22	2023	21/12/2023	69769	Urbis	Axia 16 LED 350mA	19 Watts	6.00 Metres	Galvanised Steel	
Y	10	STREET LIGHTING	PRINCESS STREET	IMMINGHAM	518345.91	414380.89	2008		55655	1 Urbis LED	Axia 16 LED 500mA	28 Watts	6.00 Metres	Galvanised Steel	
Y	11	STREET LIGHTING	PRINCESS STREET	IMMINGHAM	518315.37	414368.28	2008		55656	1 Urbis LED	Axia 16 LED 500mA	28 Watts	6.00 Metres	Galvanised Steel	
Y	12	STREET LIGHTING	PRINCESS STREET	IMMINGHAM	518343.64	414350.66	2008		55657	1 Urbis LED	Axia 16 LED 500mA	28 Watts	6.00 Metres	Galvanised Steel	
Y	13	STREET LIGHTING	PRINCESS STREET	IMMINGHAM	518371.71	414365.22	2008		55658	1 Urbis LED	Axia 16 LED 500mA	28 Watts	6.00 Metres	Galvanised Steel	
Y	14	STREET LIGHTING	PRINCESS STREET	IMMINGHAM	518365.59	414332.88	2008		55659	1 Urbis LED	Axia 16 LED 500mA	28 Watts	6.00 Metres	Galvanised Steel	
Y	15	STREET LIGHTING	PRINCESS STREET	IMMINGHAM	518370.13	414302.01	2008		55660	1 Urbis LED	Axia 16 LED 500mA	28 Watts	6.00 Metres	Galvanised Steel	
Y	16	STREET LIGHTING	PRINCESS STREET	IMMINGHAM	518371.45	414271.78	2008		55661	1 Urbis LED	Axia 16 LED 500mA	28 Watts	6.00 Metres	Galvanised Steel	
Y	17	STREET LIGHTING	PRINCESS STREET	IMMINGHAM	518391.08	414249.79	2008		55662	1 Urbis LED	Axia 16 LED 500mA	28 Watts	6.00 Metres	Galvanised Steel	
Y	18	STREET LIGHTING	PRINCESS STREET	IMMINGHAM	518395.3	414221.81	2006		55663	1 Urbis LED	Axia 16 LED 500mA	28 Watts	6.00 Metres	Galvanised Steel	
Y	1	STREET LIGHTING	ROUNDWAY	IMMINGHAM	518415.19	414354.47	1984		56337	Urbis	Axia 16 LED 350mA	19 Watts	5.00 Metres	Galvanised Steel	
Y	2	STREET LIGHTING	ROUNDWAY	IMMINGHAM	518458.11	414392.34	1984		56338	Urbis	Axia 16 LED 350mA	19 Watts	5.00 Metres	Galvanised Steel	
Y	3	STREET LIGHTING	ROUNDWAY	IMMINGHAM	518459.37	414432.54	1984		56339	Urbis	Axia 16 LED 350mA	19 Watts	5.00 Metres	Galvanised Steel	
Y	4	STREET LIGHTING	ROUNDWAY	IMMINGHAM	518457.34	414359.57	1984		56340	Urbis	Axia 16 LED 350mA	19 Watts	5.00 Metres	Galvanised Steel	
Y	5	STREET LIGHTING	ROUNDWAY	IMMINGHAM	518484.68	414339.79	1984		56341	Urbis	Axia 16 LED 350mA	19 Watts	5.00 Metres	Galvanised Steel	
Y	6	STREET LIGHTING	ROUNDWAY	IMMINGHAM	518477.59	414310.62	1984		56342	Urbis	Axia 16 LED 350mA	19 Watts	5.00 Metres	Galvanised Steel	
Y	7	STREET LIGHTING	ROUNDWAY	IMMINGHAM	518441.39	414318.74	1984		56343	Urbis	Axia 16 LED 350mA	19 Watts	5.00 Metres	Galvanised Steel	
Y	1	STREET LIGHTING	ST ANDREWS WAY	IMMINGHAM	517347.71	414858.99	1992		57585	1 Urbis LED	Axia 16 LED 500mA	28 Watts	5.00 Metres	Galvanised Steel	
Y	2	STREET LIGHTING	ST ANDREWS WAY	IMMINGHAM	517333.53	414833.49	1992		57586	1 Urbis LED	Axia 16 LED 500mA	28 Watts	5.00 Metres	Galvanised Steel	
Y	3	STREET LIGHTING	ST ANDREWS WAY	IMMINGHAM	517334.54	414807.22	1992		57587	1 Urbis LED	Axia 16 LED 500mA	28 Watts	5.00 Metres	Galvanised Steel	
Y	4	STREET LIGHTING	ST ANDREWS WAY	IMMINGHAM	517341.38	414783.74	1992		57588	1 Urbis LED	Axia 16 LED 500mA	28 Watts	5.00 Metres	Galvanised Steel	
Y	5	STREET LIGHTING	ST ANDREWS WAY	IMMINGHAM	517342.9	414756.08	1992		57589	1 Urbis LED	Axia 16 LED 500mA	28 Watts	5.00 Metres	Galvanised Steel	
Y	6	STREET LIGHTING	ST ANDREWS WAY	IMMINGHAM	517348.09	414734.31	1992		57590	1 Urbis LED	Axia 16 LED 500mA	28 Watts	5.00 Metres	Galvanised Steel	
Y	7	STREET LIGHTING	ST ANDREWS WAY	IMMINGHAM	517353.53	414717.8	1992		57591	1 Urbis LED	Axia 16 LED 500mA	28 Watts	5.00 Metres	Galvanised Steel	
Y	8	STREET LIGHTING	ST ANDREWS WAY	IMMINGHAM	517379.1	414732.42	1992		57592	1 Urbis LED	Axia 16 LED 500mA	28 Watts	5.00 Metres	Galvanised Steel	
Y	9	STREET LIGHTING	ST ANDREWS WAY	IMMINGHAM	517399.88	414735.46	1992		57593	1 Urbis LED	Axia 16 LED 500mA	28 Watts	5.00 Metres	Galvanised Steel	
Y	1	STREET LIGHTING	STANDISH LANE	IMMINGHAM	517734.33	415129.52	2014	31/03/2014	58112	Urbis	Axia 16 LED 350mA	19 Watts	6.00 Metres	Steel	
Y	2	STREET LIGHTING	STANDISH LANE	IMMINGHAM	517743.28	415095.78	2014	31/03/2014	58113	Urbis	Axia 16 LED 350mA	19 Watts	6.00 Metres	Steel	
Y	3	STREET LIGHTING	STANDISH LANE	IMMINGHAM	517771.15	415069.1	1986		58114	Urbis	Axia 16 LED 350mA	19 Watts	5.00 Metres	Galvanised Steel	
Y	4	STREET LIGHTING	STANDISH LANE	IMMINGHAM	517779.29	415043.42	2014	31/03/2014	58115	Urbis	Axia 16 LED 350mA	19 Watts	6.00 Metres	Steel	

Y	5	STREET LIGHTING	STANDISH LANE	IMMINGHAM	517794.73	415011.8	2014	31/03/2014	58116	Urbis	Axia 16 LED 350mA	19 Watts	6.00 Metres	Steel	
Y	6	STREET LIGHTING	STANDISH LANE	IMMINGHAM	517752.79	415056.58	1986		58117	Urbis	Axia 16 LED 350mA	19 Watts	5.00 Metres	Galvanised Steel	
Y	7	STREET LIGHTING	STANDISH LANE	IMMINGHAM	517718.88	415042.69	2014	31/03/2014	58118	Urbis	Axia 16 LED 350mA	19 Watts	6.00 Metres	Steel	
Y	1	STREET LIGHTING	THORNTON PLACE	IMMINGHAM	518015.52	414441.08	2014	31/03/2014	59159	1 Urbis LED	Axia 16 LED 500mA	28 Watts	6.00 Metres	Steel	
Y	2	STREET LIGHTING	THORNTON PLACE	IMMINGHAM	518099.31	414441.51	2014	31/03/2014	59160	1 Urbis LED	Axia 16 LED 500mA	28 Watts	6.00 Metres	Steel	
Y	3	STREET LIGHTING	THORNTON PLACE	IMMINGHAM	518069.57	414417.81	2014	31/03/2014	59161	1 Urbis LED	Axia 16 LED 500mA	28 Watts	6.00 Metres	Steel	
Y	4	STREET LIGHTING	THORNTON PLACE	IMMINGHAM	518035.26	414398	2014	31/03/2014	59162	1 Urbis LED	Axia 16 LED 500mA	28 Watts	6.00 Metres	Steel	
Y	5	STREET LIGHTING	THORNTON PLACE	IMMINGHAM	517984.5	414377.14	2014	31/03/2014	59163	1 Urbis LED	Axia 16 LED 500mA	28 Watts	6.00 Metres	Steel	
Y	6	STREET LIGHTING	THORNTON PLACE	IMMINGHAM	517936.4	414345.82	2014	31/03/2014	59164	1 Urbis LED	Axia 16 LED 500mA	28 Watts	6.00 Metres	Steel	
Y	1	STREET LIGHTING	VALDA VALE	IMMINGHAM	517444.88	414629.6	2008		59522	Urbis	Axia 16 LED 350mA	19 Watts	6.00 Metres	Steel	
Y	2	STREET LIGHTING	VALDA VALE	IMMINGHAM	517448.64	414665.61	2008		59523	Urbis	Axia 16 LED 350mA	19 Watts	6.00 Metres	Steel	
Y	3	STREET LIGHTING	VALDA VALE	IMMINGHAM	517453.53	414694.38	2008		59524	Urbis	Axia 16 LED 350mA	19 Watts	6.00 Metres	Steel	
Y	4	STREET LIGHTING	VALDA VALE	IMMINGHAM	517462.83	414723.53	2008		59525	Urbis	Axia 16 LED 350mA	19 Watts	6.00 Metres	Steel	
Y	5	STREET LIGHTING	VALDA VALE	IMMINGHAM	517469.64	414754.41	2008		59526	Urbis	Axia 16 LED 350mA	19 Watts	6.00 Metres	Steel	
Y	6	STREET LIGHTING	VALDA VALE	IMMINGHAM	517448.93	414780.78	2008		59527	Urbis	Axia 16 LED 350mA	19 Watts	6.00 Metres	Steel	
Y	7	STREET LIGHTING	VALDA VALE	IMMINGHAM	517477.12	414791.81	2008		59528	Urbis	Axia 16 LED 350mA	19 Watts	6.00 Metres	Steel	
Y	1	STREET LIGHTING	WESTON GROVE	IMMINGHAM	517925.1	415099.22	2014	31/03/2014	60563	1 Urbis LED	Axia 16 LED 500mA	28 Watts	6.00 Metres	Steel	
Y	2	STREET LIGHTING	WESTON GROVE	IMMINGHAM	517902.66	415134.86	2014	31/03/2014	60564	1 Urbis LED	Axia 16 LED 500mA	28 Watts	6.00 Metres	Steel	
Y	3	STREET LIGHTING	WESTON GROVE	IMMINGHAM	517889.23	415166.49	2014	31/03/2014	60565	1 Urbis LED	Axia 16 LED 500mA	28 Watts	6.00 Metres	Steel	
Y	4	STREET LIGHTING	WESTON GROVE	IMMINGHAM	517863.69	415192.7	2014	31/03/2014	60566	1 Urbis LED	Axia 16 LED 500mA	28 Watts	6.00 Metres	Steel	
Y	1	STREET LIGHTING	WINSLOW DRIVE	IMMINGHAM	518032.92	414516.38	2009		60933	Urbis	Axia 16 LED 350mA	19 Watts	6.00 Metres	Steel	
Y	2	STREET LIGHTING	WINSLOW DRIVE	IMMINGHAM	518020.48	414540.7	2009		60934	Urbis	Axia 16 LED 350mA	19 Watts	6.00 Metres	Steel	
Y	3	STREET LIGHTING	WINSLOW DRIVE	IMMINGHAM	518005.35	414568.2	2009		60935	Urbis	Axia 16 LED 350mA	19 Watts	6.00 Metres	Steel	
Y	4	STREET LIGHTING	WINSLOW DRIVE	IMMINGHAM	518002.44	414600.62	2009		60936	Urbis	Axia 16 LED 350mA	19 Watts	6.00 Metres	Steel	
Y	5	STREET LIGHTING	WINSLOW DRIVE	IMMINGHAM	517989.56	414627.36	2009		60937	Urbis	Axia 16 LED 350mA	19 Watts	6.00 Metres	Steel	
Y	6	STREET LIGHTING	WINSLOW DRIVE	IMMINGHAM	517970.2	414647.16	2009		60938	Urbis	Axia 16 LED 350mA	19 Watts	6.00 Metres	Steel	
Y	7	STREET LIGHTING	WINSLOW DRIVE	IMMINGHAM	517967.5	414668.16	2009		60939	Urbis	Axia 16 LED 350mA	19 Watts	6.00 Metres	Steel	
Y	8	STREET LIGHTING	WINSLOW DRIVE	IMMINGHAM	517967.11	414699.36	2009		60940	Urbis	Axia 16 LED 350mA	19 Watts	6.00 Metres	Steel	
Y	9	STREET LIGHTING	WINSLOW DRIVE	IMMINGHAM	517994.96	414719.49	2009		60941	Urbis	Axia 16 LED 350mA	19 Watts	6.00 Metres	Steel	
Y	10	STREET LIGHTING	WINSLOW DRIVE	IMMINGHAM	517977.13	414734.42	2009		60942	Urbis	Axia 16 LED 350mA	19 Watts	6.00 Metres	Steel	
Y	11	STREET LIGHTING	WINSLOW DRIVE	IMMINGHAM	518001.06	414748.17	2009		60943	Urbis	Axia 16 LED 350mA	19 Watts	6.00 Metres	Steel	
Y	12	STREET LIGHTING	WINSLOW DRIVE	IMMINGHAM	517972.83	414763.66	2009		60944	Urbis	Axia 16 LED 350mA	19 Watts	6.00 Metres	Steel	
Y	13	STREET LIGHTING	WINSLOW DRIVE	IMMINGHAM	517952.56	414789.46	2009		60945	Urbis	Axia 16 LED 350mA	19 Watts	6.00 Metres	Steel	
Y	14	STREET LIGHTING	WINSLOW DRIVE	IMMINGHAM	517947.71	414825.2	2009		60946	Urbis	Axia 16 LED 350mA	19 Watts	6.00 Metres	Steel	
Y	15	STREET LIGHTING	WINSLOW DRIVE	IMMINGHAM	517926.1	414852.49	2009		60947	Urbis	Axia 16 LED 350mA	19 Watts	6.00 Metres	Steel	
Y	16	STREET LIGHTING	WINSLOW DRIVE	IMMINGHAM	517897.01	414875.91	2009		60948	Urbis	Axia 16 LED 350mA	19 Watts	6.00 Metres	Steel	
Y	17	STREET LIGHTING	WINSLOW DRIVE	IMMINGHAM	517880.1	414903.76	2009		60949	Urbis	Axia 16 LED 350mA	19 Watts	6.00 Metres	Steel	
Y	18	STREET LIGHTING	WINSLOW DRIVE	IMMINGHAM	517855.17	414925.37	2009		60950	Urbis	Axia 16 LED 350mA	19 Watts	6.00 Metres	Steel	
Y	19	STREET LIGHTING	WINSLOW DRIVE	IMMINGHAM	517840.76	414955.71	2009		60951	Urbis	Axia 16 LED 350mA	19 Watts	6.00 Metres	Steel	
Y	20	STREET LIGHTING	WINSLOW DRIVE	IMMINGHAM	517851.29	414982.17	2009		60952	Urbis	Axia 16 LED 350mA	19 Watts	6.00 Metres	Steel	
Y	21	STREET LIGHTING	WINSLOW DRIVE	IMMINGHAM	517854.48	415010.16	2009		60953	Urbis	Axia 16 LED 350mA	19 Watts	6.00 Metres	Steel	
Y	22	STREET LIGHTING	WINSLOW DRIVE	IMMINGHAM	517875.38	415030.24	2009		60954	Urbis	Axia 16 LED 350mA	19 Watts	6.00 Metres	Steel	
Y	23	STREET LIGHTING	WINSLOW DRIVE	IMMINGHAM	517902.47	415046.89	2009		60955	Urbis	Axia 16 LED 350mA	19 Watts	6.00 Metres	Steel	
Y	24	STREET LIGHTING	WINSLOW DRIVE	IMMINGHAM	517929.15	415064.48	2009		60956	Urbis	Axia 16 LED 350mA	19 Watts	6.00 Metres	Steel	
Y	25	STREET LIGHTING	WINSLOW DRIVE	IMMINGHAM	517954.78	415070.01	2009		60957	Urbis	Axia 16 LED 350mA	19 Watts	6.00 Metres	Steel	
Y	26	STREET LIGHTING	WINSLOW DRIVE	IMMINGHAM	517973.76	415094.95	2009		60958	Urbis	Axia 16 LED 350mA	19 Watts	6.00 Metres	Steel	
Y	27	STREET LIGHTING	WINSLOW DRIVE	IMMINGHAM	517998.28	415111.16	2009		60959	Urbis	Axia 16 LED 350mA	19 Watts	6.00 Metres	Steel	
Y	28	STREET LIGHTING	WINSLOW DRIVE	IMMINGHAM	518030.98	415122.11	2009		60960	Urbis	Axia 16 LED 350mA	19 Watts	6.00 Metres	Steel	
Y	29	STREET LIGHTING	WINSLOW DRIVE	IMMINGHAM	518046.91	415144.27	2009		60961	Urbis	Axia 16 LED 350mA	19 Watts	6.00 Metres	Steel	
Y	1	STREET LIGHTING	PELHAM ROAD OAP HOME OFF	IMMINGHAM	518704	414906	1978		55244	Urbis	Axia 8 LED 350mA	10 Watts	5.00 Metres	Galvanised Steel	
Y	2	STREET LIGHTING	PELHAM ROAD OAP HOME OFF	IMMINGHAM	518706	414884	1978		55245	Urbis	Axia 8 LED 350mA	10 Watts	5.00 Metres	Galvanised Steel	
Y	3	STREET LIGHTING	PELHAM ROAD OAP HOME OFF	IMMINGHAM	518723	414923	1978		55246	Urbis	Axia 8 LED 350mA	10 Watts	5.00 Metres	Galvanised Steel	
Y	4	STREET LIGHTING	PELHAM ROAD OAP HOME OFF	IMMINGHAM	518726	414903	1978		55247	Urbis	Axia 8 LED 350mA	10 Watts	5.00 Metres	Galvanised Steel	
Y	5	STREET LIGHTING	PELHAM ROAD OAP HOME OFF	IMMINGHAM	518737	414874	1978		55248	Urbis	Axia 8 LED 350mA	10 Watts	5.00 Metres	Galvanised Steel	
Y	6	STREET LIGHTING	PELHAM ROAD OAP HOME OFF	IMMINGHAM	518759	414840	1978		55249	Urbis	Axia 8 LED 350mA	10 Watts	5.00 Metres	Galvanised Steel	
Y	7	STREET LIGHTING	PELHAM ROAD OAP HOME OFF	IMMINGHAM	518744	414828	1978		55250	Urbis	Axia 8 LED 350mA	10 Watts	5.00 Metres	Galvanised Steel	
Y	1	STREET LIGHTING	MANBY ROAD WAREHOUSE WEST	IMMINGHAM	518409.11	415599.22	2021	14/10/2021	68731	Urbis	Teceo 40 LED 500mA	64 Watts	8.00 Metres	Galvanised Steel	
Y	2	STREET LIGHTING	MANBY ROAD WAREHOUSE WEST	IMMINGHAM	518392.28	415585.69	1993		53163	1 Urbis LED	Teceo 40 LED 500mA	64 Watts	8.00 Metres	Galvanised Steel	
Y	3	STREET LIGHTING	MANBY ROAD WAREHOUSE WEST	IMMINGHAM	518365.47	415564.54	1993		53164	1 Urbis LED	Teceo 40 LED 500mA	64 Watts	8.00 Metres	Galvanised Steel	
Y	4	STREET LIGHTING	MANBY ROAD WAREHOUSE WEST	IMMINGHAM	518343.93	415551.14	1993		53165	1 Urbis LED	Teceo 40 LED 500mA	64 Watts	8.00 Metres	Galvanised Steel	
Y	5	STREET LIGHTING	MANBY ROAD WAREHOUSE WEST	IMMINGHAM	518386.53	415569.01	2021	14/10/2021	68854	Urbis	Teceo 40 LED 500mA	64 Watts	8.00 Metres	Galvanised Steel	
Y	6	STREET LIGHTING	MANBY ROAD WAREHOUSE WEST	IMMINGHAM	518412.77	415533.8	1993		53167	1 Urbis LED	Teceo 40 LED 500mA	64 Watts	8.00 Metres	Galvanised Steel	
Y	7	STREET LIGHTING	MANBY ROAD WAREHOUSE WEST	IMMINGHAM	518429.78	415503.92	1993		53168	1 Urbis LED	Teceo 40 LED 500mA	64 Watts	8.00 Metres	Galvanised Steel	
Y	1	STREET LIGHTING	PAMELA CLOSE	IMMINGHAM	518712.53	414829.33	1993		54584	Urbis	Axia 16 LED 350mA	19 Watts	6.00 Metres	Galvanised Steel	
Y	1	STREET LIGHTING	GREEN LANE	IMMINGHAM	517583.32	415056.93	2007		49704	Urbis	Axia 16 LED 350mA	19 Watts	6.00 Metres	Galvanised Steel	
Y	2	STREET LIGHTING	GREEN LANE	IMMINGHAM	517594.85	415021.39	2007		49705	Urbis	Axia 16 LED 350mA	19 Watts	6.00 Metres	Galvanised Steel	
Y	3	STREET LIGHTING	GREEN LANE	IMMINGHAM	517603.94	414989.94	2007		49706	Urbis	Axia 16 LED 350mA	19 Watts	6.00 Metres	Galvanised Steel	
Y	4	STREET LIGHTING	GREEN LANE	IMMINGHAM	517609.97	414956.7	2007		49707	Urbis	Axia 16 LED 350mA	19 Watts	6.00 Metres	Galvanised Steel	
Y	5	STREET LIGHTING	GREEN LANE	IMMINGHAM	517618.68	414925.49	2007		49708	Urbis	Axia 16 LED 350mA	19 Watts	6.00 Metres	Galvanised Steel	
Y	6	STREET LIGHTING	GREEN LANE	IMMINGHAM	517630.87	414892.87	2007		49709	Urbis	Axia 16 LED 350mA	19 Watts	6.00 Metres	Galvanised Steel	
Y	7	STREET LIGHTING	GREEN LANE	IMMINGHAM	517643.58	414862.45	2007		49710	Urbis	Axia 16 LED 350mA	19 Watts	6.00 Metres	Galvanised Steel	
Y	8	STREET LIGHTING	GREEN LANE	IMMINGHAM	517657.61	414831.38	2007		49711	Urbis	Axia 16 LED 350mA	19 Watts	6.00 Metres	Galvanised Steel	
Y	9	STREET LIGHTING	GREEN LANE	IMMINGHAM	517677.9	414814.95	2007		49712	Urbis	Axia 16 LED 350mA	19 Watts	6.00 Metres	Galvanised Steel	
Y	10	STREET LIGHTING	GREEN LANE	IMMINGHAM	517695.37	414781.15	2007		49713	Urbis	Axia 16 LED 350mA	19 Watts	6.00 Metres	Galvanised Steel	
Y	11	STREET LIGHTING	GREEN LANE	IMMINGHAM	517659.73	414773.28	2007		49714	Urbis	Axia 16 LED 350mA	19 Watts	6.00 Metres	Galvanised Steel	
Y	12	STREET LIGHTING	GREEN LANE	IMMINGHAM	517628.09	414762.36	2007		49715	Urbis	Axia 16 LED 350mA	19 Watts	6.00 Metres	Galvanised Steel	
Y	13	STREET LIGHTING	GREEN LANE	IMMINGHAM	517594.68	414751.33	2007		49716	Urbis	Axia 16 LED 350mA	19 Watts	6.00 Metres	Galvanised Steel	
Y	14	STREET LIGHTING	GREEN LANE	IMMINGHAM	517703.82	414749.12	2007		49717	Urbis	Axia 16 LED 350mA	19 Watts	6.00 Metres	Galvanised Steel	
Y	15	STREET LIGHTING	GREEN LANE	IMMINGHAM	517719.21	414719.14	2007		49718	Urbis	Axia 16 LED 350mA	19 Watts	6.00 Metres	Galvanised Steel	
Y	16	STREET LIGHTING	GREEN LANE	IMMINGHAM	517733.79	414692.07	2007		49719	Urbis	Axia 16 LED 350mA	19 Watts	6.00 Metres	Galvanised Steel	
Y	17	STREET LIGHTING	GREEN LANE	IMMINGHAM	517753.02	414704.59	2007		49720	Urbis	Axia 16 LED 350mA	19 Watts	6.00 Metres	Galvanised Steel	
Y	18	STREET LIGHTING	GREEN LANE	IMMINGHAM	517751.02	414660.27	2007		49721	Urbis	Axia 16 LED 350mA	19 Watts	6.00 Metres	Galvanised Steel	
Y	19	STREET LIGHTING	GREEN LANE	IMMINGHAM	517726.2	414645.6	2007		49722	Urbis	Axia 16 LED 350mA	19 Watts	6.00 Metres	Galvanised Steel	
Y	20	STREET LIGHTING	GREEN LANE	IMMINGHAM	517763.15	414628.2	2007		49723	Urbis	Axia 16 LED 350mA	19 Watts	6.00 Metres	Galvanised Steel	
Y	21	STREET LIGHTING	GREEN LANE	IMMINGHAM	517775.84	414597.73	2007		49724	Urbis	Axia 16 LED 350mA	19 Watts	6.00 Metres	Galvanised Steel	
Y	22	STREET LIGHTING	GREEN LANE	IMMINGHAM	517791.91	414563.02	2007		49725	Urbis	Axia 16 LED 350mA	19 Watts	6.00 Metres	Galvanised Steel	
Y	23	STREET LIGHTING	GREEN LANE	IMMINGHAM	517807.99	414531.61	2007		49726	Urbis	Axia 16 LED 350mA	19 Watts	6.00 Metres	Galvanised Steel	
Y	24	STREET LIGHTING	GREEN LANE	IMMINGHAM	517788.82	414515.34	2007		49727	Urbis	Axia 16 LED 350mA	19 Watts	6.00 Metres	Galvanised Steel	
Y	25	STREET LIGHTING	GREEN LANE	IMMINGHAM	517826.51	414498.69	2007		49728	Urbis	Axia 16 LED 350mA	19 Watts	6.00 Metres	Galvanised Steel	
Y	26	STREET LIGHTING	GREEN LANE	IMMINGHAM	517838.07	414466.9	2007		49729	Urbis	Axia 16 LED 350mA	19 Watts	6.00 Metres	Galvanised Steel	
Y	27	STREET LIGHTING	GREEN LANE	IMMINGHAM	517859.78	414439.53	2007		49730	Urbis	Axia 16 LED 350mA	19 Watts	6.00 Metres	Galvanised Steel	
Y	1	STREET LIGHTING	OAKHAM WALK	IMMINGHAM	519053.01	414400.49	1998		54321	Urbis	Axia 8 LED 350mA	10 Watts	5.00 Metres	Galvanised Steel	
Y	2	STREET LIGHTING	OAKHAM WALK	IMMINGHAM	519080.98	414419.29	1998		54322	Urbis	Axia 8 LED 350mA	10 Watts	5.00 Metres	Galvanised Steel	
Y	1	STREET LIGHTING	DUNSTER WALK	IMMINGHAM	519097.92	414285.1	1998		47656	Urbis	Axia 8 LED 350mA	10 Watts	5.00 Metres	Galvanised Steel	
Y	2	STREET LIGHTING	DUNSTER WALK	IMMINGHAM	519113.24	414297.19	1998		47657	Urbis	Axia 8 LED 350mA	10 Watts	5.00 Metres	Galvanised Steel	
Y	3	STREET LIGHTING	DUNSTER WALK	IMMINGHAM	519143.36	414315.36	1998		47658	Urbis	Axia 8 LED 350mA	10 Watts	5.00 Metres	Galvanised Steel	
Y	1	STREET LIGHTING	NEWARK WALK	IMMINGHAM	518714.36	414359.29	1997		54052	Urbis	Axia 8 LED 350mA	10 Watts	5.00 Metres	Galvanised Steel	
Y	2	STREET LIGHTING	NEWARK WALK	IMMINGHAM	518727.98	414336.66	1997		54053	Urbis	Axia 8 LED 350mA	10 Watts	5.00 Metres	Galvanised Steel	
Y	3	STREET LIGHTING	NEWARK WALK	IMMINGHAM	518736.28	414310.03	1997		54054	Urbis	Axia 8 LED 350mA	10 Watts	5.00 Metres	Galvanised Steel	
Y	4	STREET LIGHTING	NEWARK WALK	IMMINGHAM	518751.27	414280.66	1997		54055	Urbis	Axia 8 LED 350mA	10 Watts	5.00 Metres	Galvanised Steel	
Y	5	STREET LIGHTING	NEWARK WALK	IMMINGHAM	518766.64	414247.98	1997		54056	Urbis	Axia 8 LED 350mA	10 Watts	5.00 Metres	Galvanised Steel	
Y	6	STREET LIGHTING	NEWARK WALK	IMMINGHAM	518773.35	414220.26	1997		54057	Urbis	Axia 8 LED 350mA	10 Watts	5.00 Metres	Galvanised Steel	
Y	7	STREET LIGHTING	NEWARK WALK	IMMINGHAM	518786.51	414193.62	1997		54058	Urbis	Axia 8 LED 350mA	10 Watts	5.00 Metres	Galvanised Steel	
Y	8	STREET LIGHTING	NEWARK WALK	IMMINGHAM	518798.92	414161.53	1997		54059	Urbis	Axia 8 LED 350mA	10 Watts	5.00 Metres	Galvanised Steel	
Y	9	STREET LIGHTING	NEWARK WALK	IMMINGHAM	518811.98	414134.13	1997		54060	Urbis	Axia 8 LED 350mA	10 Watts	5.00 Metres	Galvanised Steel	
Y	10	STREET LIGHTING	NEWARK WALK	IMMINGHAM	518844.76	414133.31	1997		54061	Urbis	Axia 8 LED 350mA	10 Watts	5.00 Metres	Galvanised Steel	
Y	11	STREET LIGHTING	NEWARK WALK	IMMINGHAM	518867.1	414137.07	1997		54062	Urbis	Axia 8 LED 350mA	10 Watts	5.00 Metres	Galvanised Steel	
Y	12	STREET LIGHTING	NEWARK WALK	IMMINGHAM	518888.12	414140.62	1997		54063	Urbis	Axia 8 LED 350mA	10 Watts	5.00 Metres	Galvanised Steel	
Y	13	STREET LIGHTING	NEWARK WALK	IMMINGHAM	518908.37	414144.86	1997		54064	Urbis	Axia 8 LED 350mA	10 Watts	5.00 Metres	Galvanised Steel	
Y	14	STREET LIGHTING	NEWARK WALK	IMMINGHAM	518936.85	414149.1	1997		54065	Urbis	Axia 8 LED 350mA	10 Watts	5.00 Metres	Galvanised Steel	

Y	15	STREET LIGHTING	NEWARK WALK	IMMINGHAM	518966.34	414153.97	1997		54066	Urbis	Axia 8 LED 350mA	10 Watts	5.00 Metres	Galvanised Steel	
Y	16	STREET LIGHTING	NEWARK WALK	IMMINGHAM	518992.54	414156.19	1997		54067	Urbis	Axia 8 LED 350mA	10 Watts	5.00 Metres	Galvanised Steel	
Y	17	STREET LIGHTING	NEWARK WALK	IMMINGHAM	519025.2	414163.09	1997		54068	Urbis	Axia 8 LED 350mA	10 Watts	5.00 Metres	Galvanised Steel	
Y	18	STREET LIGHTING	NEWARK WALK	IMMINGHAM	519053.94	414167.71	1997		54069	Urbis	Axia 8 LED 350mA	10 Watts	5.00 Metres	Galvanised Steel	
Y	19	STREET LIGHTING	NEWARK WALK	IMMINGHAM	519085.33	414172.33	1997		54070	Urbis	Axia 8 LED 350mA	10 Watts	5.00 Metres	Galvanised Steel	
Y	20	STREET LIGHTING	NEWARK WALK	IMMINGHAM	519139.76	414180.37	1997		54071	Urbis	Axia 8 LED 350mA	10 Watts	5.00 Metres	Galvanised Steel	
Y	21	STREET LIGHTING	NEWARK WALK	IMMINGHAM	519162.92	414184.67	1997		54072	Urbis	Axia 8 LED 350mA	10 Watts	5.00 Metres	Galvanised Steel	
Y	22	STREET LIGHTING	NEWARK WALK	IMMINGHAM	519191.4	414193.09	1997		54073	Urbis	Axia 8 LED 350mA	10 Watts	5.00 Metres	Galvanised Steel	
Y	1	STREET LIGHTING	HARLECH WALK	IMMINGHAM	518855.96	414195.16	1998		50184	Urbis	Axia 8 LED 350mA	10 Watts	5.00 Metres	Galvanised Steel	
Y	2	STREET LIGHTING	HARLECH WALK	IMMINGHAM	518882.92	414195.48	1998		50185	Urbis	Axia 8 LED 350mA	10 Watts	5.00 Metres	Galvanised Steel	
Y	3	STREET LIGHTING	HARLECH WALK	IMMINGHAM	518909.63	414201.49	1998		50186	1 Urbis LED	Axia 16 LED 500mA	28 Watts	5.00 Metres	Galvanised Steel	
Y	4	STREET LIGHTING	HARLECH WALK	IMMINGHAM	518905.33	414168.14	1998		50187	Urbis	Axia 8 LED 350mA	10 Watts	5.00 Metres	Galvanised Steel	
Y	5	STREET LIGHTING	HARLECH WALK	IMMINGHAM	518931.66	414212.13	1998		50188	Urbis	Axia 8 LED 350mA	10 Watts	5.00 Metres	Galvanised Steel	
Y	6	STREET LIGHTING	HARLECH WALK	IMMINGHAM	518914.44	414223.14	1998		50189	Urbis	Axia 8 LED 350mA	10 Watts	5.00 Metres	Galvanised Steel	
Y	1	STREET LIGHTING	LULWORTH WALK	IMMINGHAM	518807.49	414295.37	1998		53000	Urbis	Axia 16 LED 350mA	19 Watts	5.00 Metres	Galvanised Steel	
Y	2	STREET LIGHTING	LULWORTH WALK	IMMINGHAM	518775.85	414286.06	1998		53001	Urbis	Axia 8 LED 350mA	10 Watts	5.00 Metres	Galvanised Steel	
Y	1	STREET LIGHTING	NEWPORT WALK	IMMINGHAM	518861.25	414320.34	1997		54146	Urbis	Axia 8 LED 350mA	10 Watts	5.00 Metres	Galvanised Steel	
Y	2	STREET LIGHTING	NEWPORT WALK	IMMINGHAM	518892.9	414326.35	1997		54147	Urbis	Axia 8 LED 350mA	10 Watts	5.00 Metres	Galvanised Steel	
Y	3	STREET LIGHTING	NEWPORT WALK	IMMINGHAM	518916.44	414334.39	1997		54148	Urbis	Axia 8 LED 350mA	10 Watts	5.00 Metres	Galvanised Steel	
Y	4	STREET LIGHTING	NEWPORT WALK	IMMINGHAM	518914.43	414367.55	1997		54149	Urbis	Axia 8 LED 350mA	10 Watts	5.00 Metres	Galvanised Steel	
Y	5	STREET LIGHTING	NEWPORT WALK	IMMINGHAM	518912.28	414396.48	1997		54150	Urbis	Axia 8 LED 350mA	10 Watts	5.00 Metres	Galvanised Steel	
Y	1	STREET LIGHTING	BARNARD WALK	IMMINGHAM	518973.67	414450.47	1997		43701	Urbis	Axia 8 LED 350mA	10 Watts	5.00 Metres	Galvanised Steel	
Y	2	STREET LIGHTING	BARNARD WALK	IMMINGHAM	518945.07	414437.11	1997		43702	Urbis	Axia 8 LED 350mA	10 Watts	5.00 Metres	Galvanised Steel	
Y	3	STREET LIGHTING	BARNARD WALK	IMMINGHAM	518919.37	414419.32	1997		43703	Urbis	Axia 8 LED 350mA	10 Watts	5.00 Metres	Galvanised Steel	
Y	4	STREET LIGHTING	BARNARD WALK	IMMINGHAM	518891.39	414404.45	1997		43704	Urbis	Axia 8 LED 350mA	10 Watts	5.00 Metres	Galvanised Steel	
Y	5	STREET LIGHTING	BARNARD WALK	IMMINGHAM	518861.01	414383.63	1997		43705	Urbis	Axia 8 LED 350mA	10 Watts	5.00 Metres	Galvanised Steel	
Y	1	STREET LIGHTING	BLAIR WALK	IMMINGHAM	519009.89	414328.72	1997		44213	Urbis	Axia 8 LED 350mA	10 Watts	5.00 Metres	Galvanised Steel	
Y	2	STREET LIGHTING	BLAIR WALK	IMMINGHAM	519023.56	414307.52	1997		44214	Urbis	Axia 8 LED 350mA	10 Watts	5.00 Metres	Galvanised Steel	
Y	3	STREET LIGHTING	BLAIR WALK	IMMINGHAM	519037.48	414295.43	1997		44215	Urbis	Axia 8 LED 350mA	10 Watts	5.00 Metres	Galvanised Steel	
Y	4	STREET LIGHTING	BLAIR WALK	IMMINGHAM	519059.63	414302.33	1997		44216	Urbis	Axia 8 LED 350mA	10 Watts	5.00 Metres	Galvanised Steel	
Y	1	STREET LIGHTING	INGS LANE TRACK	IMMINGHAM	518858.85	414827.93	1990		51339	1 Urbis LED	Axia 16 LED 500mA	28 Watts	5.00 Metres	Galvanised Steel	
Y	2	STREET LIGHTING	INGS LANE TRACK	IMMINGHAM	518832.77	414851.51	1990		51340	1 Urbis LED	Axia 16 LED 500mA	28 Watts	5.00 Metres	Galvanised Steel	
Y	3	STREET LIGHTING	INGS LANE TRACK	IMMINGHAM	518829.86	414873.35	1990		51341	1 Urbis LED	Axia 16 LED 500mA	28 Watts	5.00 Metres	Galvanised Steel	
Y	4	STREET LIGHTING	INGS LANE TRACK	IMMINGHAM	518803.78	414899.3	1990		51342	1 Urbis LED	Axia 16 LED 500mA	28 Watts	5.00 Metres	Galvanised Steel	
Y	5	STREET LIGHTING	INGS LANE TRACK	IMMINGHAM	518800.24	414922.27	2008		51343	1 Urbis LED	Axia 16 LED 500mA	28 Watts	6.00 Metres	Galvanised Steel	
Y	6	STREET LIGHTING	INGS LANE TRACK	IMMINGHAM	518783.28	414932.22	2014		51344	1 Urbis LED	Axia 16 LED 500mA	28 Watts	6.00 Metres	Galvanised Steel	
Y	1	STREET LIGHTING	LANGLEY WALK	IMMINGHAM	518993.16	414252.17	1997		52260	Urbis	Axia 8 LED 350mA	10 Watts	5.00 Metres	Galvanised Steel	
Y	2	STREET LIGHTING	LANGLEY WALK	IMMINGHAM	518985.82	414281.35	1997		52261	Urbis	Axia 8 LED 350mA	10 Watts	5.00 Metres	Galvanised Steel	
Y	3	STREET LIGHTING	LANGLEY WALK	IMMINGHAM	518980.38	414312.11	1997		52262	Urbis	Axia 8 LED 350mA	10 Watts	5.00 Metres	Galvanised Steel	
Y	4	STREET LIGHTING	LANGLEY WALK	IMMINGHAM	518994.06	414307.96	1997		52263	Urbis	Axia 8 LED 350mA	10 Watts	5.00 Metres	Galvanised Steel	
Y	5	STREET LIGHTING	LANGLEY WALK	IMMINGHAM	518990.39	414322.33	1997		52264	Urbis	Axia 8 LED 350mA	10 Watts	5.00 Metres	Galvanised Steel	
Y	6	STREET LIGHTING	LANGLEY WALK	IMMINGHAM	518976.96	414347.93	1997		52265	1 Urbis LED	Axia 16 LED 500mA	28 Watts	5.00 Metres	Galvanised Steel	
Y	7	STREET LIGHTING	LANGLEY WALK	IMMINGHAM	518967.59	414369.96	1997		52266	Urbis	Axia 8 LED 350mA	10 Watts	5.00 Metres	Galvanised Steel	
Y	8	STREET LIGHTING	LANGLEY WALK	IMMINGHAM	518936.83	414367.61	1997		52267	Urbis	Axia 8 LED 350mA	10 Watts	5.00 Metres	Galvanised Steel	
Y	1	STREET LIGHTING	SERVICE ROAD 1	IMMINGHAM	519014.84	414451.04	1998		56898	1 Urbis LED	Axia 16 LED 500mA	28 Watts	5.00 Metres	Galvanised Steel	
Y	2	STREET LIGHTING	SERVICE ROAD 1	IMMINGHAM	519040.08	414466.92	1998		56899	1 Urbis LED	Axia 16 LED 500mA	28 Watts	5.00 Metres	Galvanised Steel	
Y	3	STREET LIGHTING	SERVICE ROAD 1	IMMINGHAM	519064.89	414445.59	1998		56900	1 Urbis LED	Axia 16 LED 500mA	28 Watts	5.00 Metres	Galvanised Steel	
Y	4	STREET LIGHTING	SERVICE ROAD 1	IMMINGHAM	519031.09	414430.79	1998		56901	1 Urbis LED	Axia 16 LED 500mA	28 Watts	5.00 Metres	Galvanised Steel	
Y	1	STREET LIGHTING	SERVICE ROAD 2	IMMINGHAM	518986.97	414406.48	1998		56930	1 Urbis LED	Axia 16 LED 500mA	28 Watts	5.00 Metres	Galvanised Steel	
Y	2	STREET LIGHTING	SERVICE ROAD 2	IMMINGHAM	518995.7	414392.63	1998		56931	1 Urbis LED	Axia 16 LED 500mA	28 Watts	5.00 Metres	Galvanised Steel	
Y	3	STREET LIGHTING	SERVICE ROAD 2	IMMINGHAM	519011.52	414366.49	1998		56932	1 Urbis LED	Axia 16 LED 500mA	28 Watts	5.00 Metres	Galvanised Steel	
Y	4	STREET LIGHTING	SERVICE ROAD 2	IMMINGHAM	518945.96	414393.96	2013	22/10/2013	56933	1 Urbis LED	Axia 16 LED 500mA	28 Watts	6.00 Metres	Steel	
Y	5	STREET LIGHTING	SERVICE ROAD 2	IMMINGHAM	518966.21	414412.25	2013	22/10/2013	56934	1 Urbis LED	Axia 16 LED 500mA	28 Watts	6.00 Metres	Steel	
Y	1	STREET LIGHTING	SERVICE ROAD 3	IMMINGHAM	519043.05	414316.76	1998		56940	1 Urbis LED	Axia 16 LED 500mA	28 Watts	5.00 Metres	Galvanised Steel	
Y	1	STREET LIGHTING	SERVICE ROAD 4	IMMINGHAM	519081.59	414336.69	1998		56944	1 Urbis LED	Axia 16 LED 500mA	28 Watts	5.00 Metres	Galvanised Steel	
Y	2	STREET LIGHTING	SERVICE ROAD 4	IMMINGHAM	519091.39	414353.15	1998		56945	1 Urbis LED	Axia 16 LED 500mA	28 Watts	5.00 Metres	Galvanised Steel	
Y	3	STREET LIGHTING	SERVICE ROAD 4	IMMINGHAM	519081.26	414378.77	1998		56946	1 Urbis LED	Axia 16 LED 500mA	28 Watts	5.00 Metres	Galvanised Steel	
Y	4	STREET LIGHTING	SERVICE ROAD 4	IMMINGHAM	519100.71	414368.13	1998		56947	1 Urbis LED	Axia 16 LED 500mA	28 Watts	5.00 Metres	Galvanised Steel	
Y	5	STREET LIGHTING	SERVICE ROAD 4	IMMINGHAM	519115.69	414363.68	1998		56948	1 Urbis LED	Axia 16 LED 500mA	28 Watts	5.00 Metres	Galvanised Steel	
Y	6	STREET LIGHTING	SERVICE ROAD 4	IMMINGHAM	519130.28	414340.55	1998		56949	1 Urbis LED	Axia 16 LED 500mA	28 Watts	5.00 Metres	Galvanised Steel	
Y	7	STREET LIGHTING	SERVICE ROAD 4	IMMINGHAM	519099.69	414330.11	1998		56950	1 Urbis LED	Axia 16 LED 500mA	28 Watts	5.00 Metres	Galvanised Steel	
Y	1	STREET LIGHTING	SERVICE ROAD 5	IMMINGHAM	519107.92	414267.57	1998		56954	1 Urbis LED	Axia 16 LED 500mA	28 Watts	5.00 Metres	Galvanised Steel	
Y	2	STREET LIGHTING	SERVICE ROAD 5	IMMINGHAM	519127.79	414280.54	1998		56955	1 Urbis LED	Axia 16 LED 500mA	28 Watts	5.00 Metres	Galvanised Steel	
Y	3	STREET LIGHTING	SERVICE ROAD 5	IMMINGHAM	519148.42	414294.03	1998		56956	1 Urbis LED	Axia 16 LED 500mA	28 Watts	5.00 Metres	Galvanised Steel	
Y	4	STREET LIGHTING	SERVICE ROAD 5	IMMINGHAM	519159.06	414272.57	1998		56957	1 Urbis LED	Axia 16 LED 500mA	28 Watts	5.00 Metres	Galvanised Steel	
Y	5	STREET LIGHTING	SERVICE ROAD 5	IMMINGHAM	519139.06	414259.09	1998		56958	1 Urbis LED	Axia 16 LED 500mA	28 Watts	5.00 Metres	Galvanised Steel	
Y	1	STREET LIGHTING	SERVICE ROAD 6	IMMINGHAM	519149.16	414202.45	1998		56962	1 Urbis LED	Axia 16 LED 500mA	28 Watts	5.00 Metres	Galvanised Steel	
Y	2	STREET LIGHTING	SERVICE ROAD 6	IMMINGHAM	519170.99	414213.89	1998		56963	1 Urbis LED	Axia 16 LED 500mA	28 Watts	5.00 Metres	Galvanised Steel	
Y	3	STREET LIGHTING	SERVICE ROAD 6	IMMINGHAM	519191.49	414226.17	1998		56964	1 Urbis LED	Axia 16 LED 500mA	28 Watts	5.00 Metres	Galvanised Steel	
Y	4	STREET LIGHTING	SERVICE ROAD 6	IMMINGHAM	519207.22	414201.51	1998		56965	1 Urbis LED	Axia 16 LED 500mA	28 Watts	5.00 Metres	Galvanised Steel	
Y	1	STREET LIGHTING	SERVICE ROAD 7	IMMINGHAM	519050.62	414188.4	1998		56972	1 Urbis LED	Axia 16 LED 500mA	28 Watts	5.00 Metres	Galvanised Steel	
Y	2	STREET LIGHTING	SERVICE ROAD 7	IMMINGHAM	519020.11	414192.76	1998		56973	1 Urbis LED	Axia 16 LED 500mA	28 Watts	5.00 Metres	Galvanised Steel	
Y	3	STREET LIGHTING	SERVICE ROAD 7	IMMINGHAM	519042.39	414202.51	1998		56974	1 Urbis LED	Axia 16 LED 500mA	28 Watts	5.00 Metres	Galvanised Steel	
Y	1	STREET LIGHTING	SERVICE ROAD 8	IMMINGHAM	519014.03	414263.96	1998		56985	1 Urbis LED	Axia 16 LED 500mA	28 Watts	5.00 Metres	Galvanised Steel	
Y	2	STREET LIGHTING	SERVICE ROAD 8	IMMINGHAM	519039.14	414260.11	1998		56986	1 Urbis LED	Axia 16 LED 500mA	28 Watts	5.00 Metres	Galvanised Steel	
Y	3	STREET LIGHTING	SERVICE ROAD 8	IMMINGHAM	519057.98	414267.71	1998		56987	1 Urbis LED	Axia 16 LED 500mA	28 Watts	5.00 Metres	Galvanised Steel	
Y	1	STREET LIGHTING	SERVICE ROAD 9	IMMINGHAM	518960.44	414207.82	1998		56992	1 Urbis LED	Axia 16 LED 500mA	28 Watts	5.00 Metres	Galvanised Steel	
Y	2	STREET LIGHTING	SERVICE ROAD 9	IMMINGHAM	518966.89	414188.9	1998		56993	1 Urbis LED	Axia 16 LED 500mA	28 Watts	5.00 Metres	Galvanised Steel	
Y	3	STREET LIGHTING	SERVICE ROAD 9	IMMINGHAM	518950.67	414176.14	1998		56994	1 Urbis LED	Axia 16 LED 500mA	28 Watts	5.00 Metres	Galvanised Steel	
Y	4	STREET LIGHTING	SERVICE ROAD 9	IMMINGHAM	518924.34	414180.9	1998		56995	1 Urbis LED	Axia 16 LED 500mA	28 Watts	5.00 Metres	Galvanised Steel	
Y	1	STREET LIGHTING	SERVICE ROAD 10	IMMINGHAM	518870.46	414230.43	1998		56902	1 Urbis LED	Axia 16 LED 500mA	28 Watts	5.00 Metres	Galvanised Steel	
Y	2	STREET LIGHTING	SERVICE ROAD 10	IMMINGHAM	518897.8	414227.64	1998		56903	1 Urbis LED	Axia 16 LED 500mA	28 Watts	5.00 Metres	Galvanised Steel	
Y	1	STREET LIGHTING	SERVICE ROAD 11	IMMINGHAM	518856.59	414172.47	1998		56904	1 Urbis LED	Axia 16 LED 500mA	28 Watts	5.00 Metres	Galvanised Steel	
Y	2	STREET LIGHTING	SERVICE ROAD 11	IMMINGHAM	518881.53	414163.42	1998		56905	1 Urbis LED	Axia 16 LED 500mA	28 Watts	5.00 Metres	Galvanised Steel	
Y	1	STREET LIGHTING	SERVICE ROAD 12	IMMINGHAM	518816.72	414168.42	1998		56906	1 Urbis LED	Axia 16 LED 500mA	28 Watts	5.00 Metres	Galvanised Steel	
Y	2	STREET LIGHTING	SERVICE ROAD 12	IMMINGHAM	518808.23	414182.22	1998		56907	1 Urbis LED	Axia 16 LED 500mA	28 Watts	5.00 Metres	Galvanised Steel	
Y	1	STREET LIGHTING	SERVICE ROAD 13	IMMINGHAM	518813.68	414240.52	1998		56908	1 Urbis LED	Axia 16 LED 500mA	28 Watts	5.00 Metres	Galvanised Steel	
Y	2	STREET LIGHTING	SERVICE ROAD 13	IMMINGHAM	518789.87	414251.05	1998		56909	1 Urbis LED	Axia 16 LED 500mA	28 Watts	5.00 Metres	Galvanised Steel	
Y	3	STREET LIGHTING	SERVICE ROAD 13	IMMINGHAM	518815.33	414264.64	1998		56910	1 Urbis LED	Axia 16 LED 500mA	28 Watts	5.00 Metres	Galvanised Steel	
Y	4	STREET LIGHTING	SERVICE ROAD 13	IMMINGHAM	518831.66	414252.61	1998		56911	1 Urbis LED	Axia 16 LED 500mA	28 Watts	5.00 Metres	Galvanised Steel	
Y	1	STREET LIGHTING	SERVICE ROAD 14	IMMINGHAM	518870.24	414299.02	1998		56912	1 Urbis LED	Axia 16 LED 500mA	28 Watts	5.00 Metres	Galvanised Steel	
Y	2	STREET LIGHTING	SERVICE ROAD 14	IMMINGHAM	518899.99	414295.47	1998		56913	1 Urbis LED	Axia 16 LED 500mA	28 Watts	5.00 Metres	Galvanised Steel	
Y	3	STREET LIGHTING	SERVICE ROAD 14	IMMINGHAM	518922.01	414306.8	1998		56914	1 Urbis LED	Axia 16 LED 500mA	28 Watts	5.00 Metres	Galvanised Steel	
Y	4	STREET LIGHTING	SERVICE ROAD 14	IMMINGHAM	518950.42	414336.99	1998		56915	1 Urbis LED	Axia 16 LED 500mA	28 Watts	5.00 Metres	Galvanised Steel	
Y	5	STREET LIGHTING	SERVICE ROAD 14	IMMINGHAM	518954.13	414309.41	1998		56916	1 Urbis LED	Axia 16 LED 500mA	28 Watts	5.00 Metres	Galvanised Steel	
Y	6	STREET LIGHTING	SERVICE ROAD 14	IMMINGHAM	518953.98	414292.18	1998		56917	1 Urbis LED	Axia 16 LED 500mA	28 Watts	5.00 Metres	Galvanised Steel	
Y	7	STREET LIGHTING	SERVICE ROAD 14	IMMINGHAM	518962.12	414261.98	1998		56918	1 Urbis LED	Axia 16 LED 500mA	28 Watts	6.00 Metres	Galvanised Steel	
Y	1	STREET LIGHTING	SERVICE ROAD 15	IMMINGHAM	518857.31	414343.88	1998		56919	1 Urbis LED	Axia 16 LED 500mA	28 Watts	5.00 Metres	Galvanised Steel	
Y	2	STREET LIGHTING	SERVICE ROAD 15	IMMINGHAM	518888.19	414359.26	1998		56920	1 Urbis LED	Axia 16 LED 500mA	28 Watts	5.00 Metres	Galvanised Steel	
Y	3	STREET LIGHTING	SERVICE ROAD 15	IMMINGHAM	518859.33	414363.18	1998		56921	1 Urbis LED	Axia 16 LED 500mA	28 Watts	5.00 Metres	Galvanised Steel	
Y	1	STREET LIGHTING	SERVICE ROAD 16	IMMINGHAM	518808.58	414319.43	1998		56922	1 Urbis LED	Axia 16 LED 500mA	28 Watts	5.00 Metres	Galvanised Steel	
Y	2	STREET LIGHTING	SERVICE ROAD 16	IMMINGHAM	518770.1	414308.54	1998		56923	1 Urbis LED	Axia 16 LED 500mA	28 Watts	5.00 Metres	Galvanised Steel	
Y	3	STREET LIGHTING	SERVICE ROAD 16	IMMINGHAM	518795.29	414311.9	1998		56924	1 Urbis LED	Axia 16 LED 500mA	28 Watts	5.00 Metres	Galvanised Steel	
Y	1	STREET LIGHTING	SERVICE ROAD 17	IMMINGHAM	518787.61	414369.93	1998		56925	1 Urbis LED	Axia 16 LED 500mA	28 Watts	5.00 Metres	Galvanised Steel	
Y	2	STREET LIGHTING	SERVICE ROAD 17	IMMINGHAM	518801.36	414391.47	1998		56926	1 Urbis LED	Axia 16 LED 500mA	28 Watts	5.00 Metres	Galvanised Steel	
Y	1	STREET LIGHTING	FOOTPATH FROM STANDISH LANE TO	IMMINGHAM	517766.48	415014.47	2014	31/03/2014	48780	Urbis	Axia 16 LED 350mA	19 Watts	6.00 Metres	Steel	
Y	2	STREET LIGHTING	FOOTPATH FROM STANDISH LANE TO	IMMINGHAM	517735.72	415022.51	2011		48781	Urbis	Axia 16 LED 350mA	19 Watts	6.00 Metres	Steel	
Y	3	STREET LIGHTING	FOOTPATH FROM STANDISH LANE TO	IMMINGHAM	517681.93	415022.76	2014	31/03/2014	48782	Urbis	Axia 16 LED 350mA	19 Watts	6.00 Metres	Steel	
Y	4	STREET LIGHTING	FOOTPATH FROM STANDISH LANE TO	IMMINGHAM	517618.06	415047.57	1963		48783	Urbis	Axia 16 LED 350mA	19 Watts	6.00 Metres	Galvanised Steel	
Y	1	STREET LIGHTING	KINLOCH WAY CAR PARK	IMMINGHAM	517820.18	414035.04	2009		51887	1 Urbis LED	Axia 16 LED 500mA	28 Watts	5.00 Metres	Galvanised Steel	

Y	1	STREET LIGHTING	BURTON ROAD	IMMINGHAM	516973.36	414616.57			66891	1 Urbis LED	Axia 16 LED 500mA	28 Watts	6.00 Metres	Galvanised Steel	
Y	2	STREET LIGHTING	BURTON ROAD	IMMINGHAM	516980.36	414634.54	2013		66494	1 Urbis LED	Axia 16 LED 500mA	28 Watts	6.00 Metres	Steel	
Y	3	STREET LIGHTING	BURTON ROAD	IMMINGHAM	517009.14	414639.74	2013		66495	1 Urbis LED	Axia 16 LED 500mA	28 Watts	6.00 Metres	Steel	
Y	4	STREET LIGHTING	BURTON ROAD	IMMINGHAM	517028.51	414640.88	2013		66496	1 Urbis LED	Axia 16 LED 500mA	28 Watts	6.00 Metres	Steel	
Y	5	STREET LIGHTING	BURTON ROAD	IMMINGHAM	517041.28	414629.84	2014		66497	1 Urbis LED	Axia 16 LED 500mA	28 Watts	6.00 Metres	Steel	
Y	6	STREET LIGHTING	BURTON ROAD	IMMINGHAM	517066.55	414644.72	2014		66498	1 Urbis LED	Axia 16 LED 500mA	28 Watts	6.00 Metres	Steel	
Y	7	STREET LIGHTING	BURTON ROAD	IMMINGHAM	517083.65	414643.87	2014		66499	1 Urbis LED	Axia 16 LED 500mA	28 Watts	6.00 Metres	Steel	
Y	8	STREET LIGHTING	BURTON ROAD	IMMINGHAM	517079.87	414657.48	2014		63020	1 Urbis LED	Axia 16 LED 500mA	28 Watts	6.00 Metres	Galvanised Steel	
Y	9	STREET LIGHTING	BURTON ROAD	IMMINGHAM	517068.12	414673.79	2012		66500	1 Urbis LED	Axia 16 LED 500mA	28 Watts	6.00 Metres	Steel	
Y	10	STREET LIGHTING	BURTON ROAD	IMMINGHAM	517058.95	414700.17			66890	1 Urbis LED	Axia 16 LED 500mA	28 Watts	6.00 Metres	Galvanised Steel	
Y	1	STREET LIGHTING	BERWICK COURT	IMMINGHAM	518513.4	414901.43	1997		44095	1 Urbis LED	Axia 16 LED 500mA	28 Watts	5.00 Metres	Galvanised Steel	
Y	1	STREET LIGHTING	CARISBROOKE WALK	IMMINGHAM	518802.67	414212.48	1998		45244	Urbis	Axia 16 LED 350mA	19 Watts	5.00 Metres	Galvanised Steel	
Y	1	STREET LIGHTING	CLEVELAND CLOSE	IMMINGHAM	517377.23	414879.19	1992		46299	Urbis	Axia 16 LED 350mA	19 Watts	5.00 Metres	Galvanised Steel	
Y	2	STREET LIGHTING	CLEVELAND CLOSE	IMMINGHAM	517382.04	414901.03	1992		46300	Urbis	Axia 16 LED 350mA	19 Watts	5.00 Metres	Galvanised Steel	
Y	3	STREET LIGHTING	CLEVELAND CLOSE	IMMINGHAM	517373.43	414926.41	1999		46301	Urbis	Axia 16 LED 350mA	19 Watts	5.00 Metres	Galvanised Steel	
Y	4	STREET LIGHTING	CLEVELAND CLOSE	IMMINGHAM	517362.04	414936.98	1992		46302	Urbis	Axia 16 LED 350mA	19 Watts	5.00 Metres	Galvanised Steel	
Y	1	STREET LIGHTING	CORFE WALK	IMMINGHAM	518987.7	414199.15	1998		46694	Urbis	Axia 8 LED 350mA	10 Watts	5.00 Metres	Galvanised Steel	
Y	2	STREET LIGHTING	CORFE WALK	IMMINGHAM	518990.24	414175.36	1998		46695	Urbis	Axia 8 LED 350mA	10 Watts	5.00 Metres	Galvanised Steel	
Y	1	STREET LIGHTING	HAZEL CROFT	IMMINGHAM	517397.73	414855.9	1990		50440	Urbis	Axia 16 LED 350mA	19 Watts	5.00 Metres	Galvanised Steel	
Y	2	STREET LIGHTING	HAZEL CROFT	IMMINGHAM	517400.01	414838.5	1990		50441	Urbis	Axia 16 LED 350mA	19 Watts	5.00 Metres	Galvanised Steel	
Y	3	STREET LIGHTING	HAZEL CROFT	IMMINGHAM	517389.63	414821.85	1990		50442	Urbis	Axia 16 LED 350mA	19 Watts	5.00 Metres	Galvanised Steel	
Y	1	STREET LIGHTING	JACKSON MEWS	IMMINGHAM	517357.73	414782.48	1991		51397	Urbis	Axia 16 LED 350mA	19 Watts	5.00 Metres	Galvanised Steel	
Y	2	STREET LIGHTING	JACKSON MEWS	IMMINGHAM	517381.15	414777.86	1991		51398	Urbis	Axia 16 LED 350mA	19 Watts	5.00 Metres	Galvanised Steel	
Y	1	STREET LIGHTING	LYDIA COURT	IMMINGHAM	517456.47	414870.9	1990		53009	Urbis	Axia 16 LED 350mA	19 Watts	5.00 Metres	Galvanised Steel	
Y	2	STREET LIGHTING	LYDIA COURT	IMMINGHAM	517449.76	414844.51	1990		53010	Urbis	Axia 16 LED 350mA	19 Watts	5.00 Metres	Galvanised Steel	
Y	1	STREET LIGHTING	MAIDEN CLOSE	IMMINGHAM	517235.05	414900	1999		53088	Urbis	Axia 16 LED 350mA	19 Watts	5.00 Metres	Galvanised Steel	
Y	2	STREET LIGHTING	MAIDEN CLOSE	IMMINGHAM	517236.95	414922.85	1999		53089	Urbis	Axia 16 LED 350mA	19 Watts	5.00 Metres	Galvanised Steel	
Y	3	STREET LIGHTING	MAIDEN CLOSE	IMMINGHAM	517253.28	414949.62	1999		53090	Urbis	Axia 16 LED 350mA	19 Watts	5.00 Metres	Galvanised Steel	
Y	1	STREET LIGHTING	MANBY ROAD BY PASS	IMMINGHAM	518536.05	415484.37	2009		60412	1 Urbis LED	Ampera 48 LED 700mA	104 Watts	12.00 Metres	Galvanised Steel	
Y	2	STREET LIGHTING	MANBY ROAD BY PASS	IMMINGHAM	518556.23	415456.07	2023	30/11/2023	69368	Urbis	Teceo 48 LED 700mA	104 Watts	12.00 Metres	Galvanised Steel	
Y	3	STREET LIGHTING	MANBY ROAD BY PASS	IMMINGHAM	518583.08	415439.49	2022	07/12/2022	69121	Urbis	mpera Maxi 128 LED 700m	277 Watts	12.00 Metres	Galvanised Steel	
Y	4	STREET LIGHTING	MANBY ROAD BY PASS	IMMINGHAM	518605.72	415426.22	2009		60415	1 Urbis LED	Ampera 48 LED 700mA	104 Watts	10.00 Metres	Galvanised Steel	
Y	5	STREET LIGHTING	MANBY ROAD BY PASS	IMMINGHAM	518608.88	415410.52	2009		60416	1 Urbis LED	Ampera 48 LED 700mA	104 Watts	10.00 Metres	Galvanised Steel	
Y	6	STREET LIGHTING	MANBY ROAD BY PASS	IMMINGHAM	518631.1	415430.82	2009		60417	1 Urbis LED	Ampera 48 LED 700mA	104 Watts	10.00 Metres	Galvanised Steel	
Y	7	STREET LIGHTING	MANBY ROAD BY PASS	IMMINGHAM	518652.42	415410.2	2009		60418	1 Urbis LED	Ampera 48 LED 700mA	104 Watts	10.00 Metres	Galvanised Steel	
Y	8	STREET LIGHTING	MANBY ROAD BY PASS	IMMINGHAM	518681.22	415404.05	2009		60419	1 Urbis LED	Ampera 48 LED 700mA	104 Watts	10.00 Metres	Galvanised Steel	
Y	9	STREET LIGHTING	MANBY ROAD BY PASS	IMMINGHAM	518707.71	415398.64	2009		60420	1 Urbis LED	Ampera 48 LED 700mA	104 Watts	10.00 Metres	Galvanised Steel	
Y	10	STREET LIGHTING	MANBY ROAD BY PASS	IMMINGHAM	518720.83	415417.69	2009		60421	1 Urbis LED	Ampera 48 LED 700mA	104 Watts	10.00 Metres	Galvanised Steel	
Y	11	STREET LIGHTING	MANBY ROAD BY PASS	IMMINGHAM	518740.25	415386.21	1996		60422	1 Urbis LED	Teceo 48 LED 700mA	104 Watts	10.00 Metres	Galvanised Steel	
Y	12	STREET LIGHTING	MANBY ROAD BY PASS	IMMINGHAM	518753.82	415394.71	1996		60423	1 Urbis LED	Teceo 48 LED 700mA	104 Watts	10.00 Metres	Galvanised Steel	
Y	13	STREET LIGHTING	MANBY ROAD BY PASS	IMMINGHAM	518761.11	415415.98	1996		60424	1 Urbis LED	Teceo 48 LED 700mA	104 Watts	10.00 Metres	Galvanised Steel	
Y	14	STREET LIGHTING	MANBY ROAD BY PASS	IMMINGHAM	518799.22	415393.92	1996		60425	1 Urbis LED	Teceo 48 LED 700mA	104 Watts	10.00 Metres	Galvanised Steel	
Y	15	STREET LIGHTING	MANBY ROAD BY PASS	IMMINGHAM	518800.44	415410.12	1996		60426	1 Urbis LED	Teceo 48 LED 700mA	104 Watts	10.00 Metres	Galvanised Steel	
Y	16	STREET LIGHTING	MANBY ROAD BY PASS	IMMINGHAM	518826.36	415392	1996		60427	1 Urbis LED	Teceo 48 LED 700mA	104 Watts	10.00 Metres	Galvanised Steel	
Y	17	STREET LIGHTING	MANBY ROAD BY PASS	IMMINGHAM	518853.3	415389.77	1996		60428	1 Urbis LED	Teceo 48 LED 700mA	104 Watts	10.00 Metres	Galvanised Steel	
Y	18	STREET LIGHTING	MANBY ROAD BY PASS	IMMINGHAM	518881.05	415387.54	1996		60429	1 Urbis LED	Teceo 48 LED 700mA	104 Watts	10.00 Metres	Galvanised Steel	
Y	19	STREET LIGHTING	MANBY ROAD BY PASS	IMMINGHAM	518908.25	415385.39	1996		60430	1 Urbis LED	Teceo 48 LED 700mA	104 Watts	10.00 Metres	Galvanised Steel	
Y	20	STREET LIGHTING	MANBY ROAD BY PASS	IMMINGHAM	518938.63	415383.17	1996		60431	1 Urbis LED	Teceo 48 LED 700mA	104 Watts	10.00 Metres	Galvanised Steel	
Y	21	STREET LIGHTING	MANBY ROAD BY PASS	IMMINGHAM	518968.25	415379.82	1996		60432	1 Urbis LED	Teceo 48 LED 700mA	104 Watts	10.00 Metres	Galvanised Steel	
Y	22	STREET LIGHTING	MANBY ROAD BY PASS	IMMINGHAM	518989.77	415366.15	1996		60433	1 Urbis LED	Teceo 48 LED 700mA	104 Watts	10.00 Metres	Galvanised Steel	
Y	23	STREET LIGHTING	MANBY ROAD BY PASS	IMMINGHAM	518999.39	415377.29	2018	31/07/2018	60434	Urbis	Ampera 48 LED 700mA	104 Watts	12.00 Metres	Galvanised Steel	
Y	24	STREET LIGHTING	MANBY ROAD BY PASS	IMMINGHAM	519030.78	415386.91	1996		60435	1 Urbis LED	Teceo 48 LED 700mA	104 Watts	10.00 Metres	Galvanised Steel	
Y	25	STREET LIGHTING	MANBY ROAD BY PASS	IMMINGHAM	519057.36	415380.45	1996		60436	1 Urbis LED	Teceo 48 LED 700mA	104 Watts	10.00 Metres	Galvanised Steel	
Y	26	STREET LIGHTING	MANBY ROAD BY PASS	IMMINGHAM	519083.69	415373.11	1996		60437	1 Urbis LED	Teceo 48 LED 700mA	104 Watts	10.00 Metres	Galvanised Steel	
Y	27	STREET LIGHTING	MANBY ROAD BY PASS	IMMINGHAM	519107.74	415360.58	2017	08/12/2017	60438	1 Urbis LED	Teceo 48 LED 700mA	104 Watts	10.00 Metres	Galvanised Steel	
Y	28	STREET LIGHTING	MANBY ROAD BY PASS	IMMINGHAM	519115.34	415341.08	1996		60439	1 Urbis LED	Teceo 48 LED 700mA	104 Watts	10.00 Metres	Galvanised Steel	
Y	29	STREET LIGHTING	MANBY ROAD BY PASS	IMMINGHAM	519132.81	415347.16	2024	25/01/2024	60440	1 Urbis LED	Teceo 48 LED 700mA	104 Watts	10.00 Metres	Galvanised Steel	
Y	30	STREET LIGHTING	MANBY ROAD BY PASS	IMMINGHAM	519157.11	415327.41	1996		60441	1 Urbis LED	Teceo 48 LED 700mA	104 Watts	10.00 Metres	Galvanised Steel	
Y	31	STREET LIGHTING	MANBY ROAD BY PASS	IMMINGHAM	519175.59	415307.54	1996		60442	1 Urbis LED	Teceo 48 LED 700mA	104 Watts	10.00 Metres	Galvanised Steel	
Y	32	STREET LIGHTING	MANBY ROAD BY PASS	IMMINGHAM	519190.53	415283.11	1996		60443	1 Urbis LED	Teceo 48 LED 700mA	104 Watts	10.00 Metres	Galvanised Steel	
Y	33	STREET LIGHTING	MANBY ROAD BY PASS	IMMINGHAM	519175.14	415276.83	1996		60444	1 Urbis LED	Teceo 48 LED 700mA	104 Watts	10.00 Metres	Galvanised Steel	
Y	1	STREET LIGHTING	MILLHOUSE RISE	IMMINGHAM	517321.4	414815.9	1992		53682	Urbis	Axia 16 LED 350mA	19 Watts	5.00 Metres	Galvanised Steel	
Y	2	STREET LIGHTING	MILLHOUSE RISE	IMMINGHAM	517299.51	414815.59	1992		53683	Urbis	Axia 16 LED 350mA	19 Watts	5.00 Metres	Galvanised Steel	
Y	1	STREET LIGHTING	PENNINE CLOSE	IMMINGHAM	517295.81	414892.6	1999		55266	Urbis	Axia 16 LED 350mA	19 Watts	5.00 Metres	Galvanised Steel	
Y	2	STREET LIGHTING	PENNINE CLOSE	IMMINGHAM	517311.25	414913.17	1999		55267	Urbis	Axia 16 LED 350mA	19 Watts	5.00 Metres	Galvanised Steel	
Y	3	STREET LIGHTING	PENNINE CLOSE	IMMINGHAM	517311.88	414936.65	1999		55268	Urbis	Axia 16 LED 350mA	19 Watts	5.00 Metres	Galvanised Steel	
Y	1	STREET LIGHTING	ROSE GARDENS	IMMINGHAM	518157.65	415032.72	1993		56258	Urbis	Axia 16 LED 350mA	19 Watts	5.00 Metres	Galvanised Steel	
Y	2	STREET LIGHTING	ROSE GARDENS	IMMINGHAM	518133.2	415023.66	1993		56259	Urbis	Axia 16 LED 350mA	19 Watts	5.00 Metres	Galvanised Steel	
Y	3	STREET LIGHTING	ROSE GARDENS	IMMINGHAM	518116.34	414998.69	1993		56260	Urbis	Axia 16 LED 350mA	19 Watts	5.00 Metres	Galvanised Steel	
Y	4	STREET LIGHTING	ROSE GARDENS	IMMINGHAM	518106.47	414989.64	1993		56261	Urbis	Axia 16 LED 350mA	19 Watts	5.00 Metres	Galvanised Steel	
Y	5	STREET LIGHTING	ROSE GARDENS	IMMINGHAM	518125.22	414978.64	1993		56262	1 Urbis LED	Teceo 48 LED 700mA	104 Watts	5.00 Metres	Galvanised Steel	
Y	6	STREET LIGHTING	ROSE GARDENS	IMMINGHAM	518101.12	414957.35	1993		56263	Urbis	Axia 16 LED 350mA	19 Watts	5.00 Metres	Galvanised Steel	
Y	7	STREET LIGHTING	ROSE GARDENS	IMMINGHAM	518077.2	414951.97	1993		56264	Urbis	Axia 16 LED 350mA	19 Watts	5.00 Metres	Galvanised Steel	
Y	8	STREET LIGHTING	ROSE GARDENS	IMMINGHAM	518079.35	414933.55	1993		56265	Urbis	Axia 16 LED 350mA	19 Watts	5.00 Metres	Galvanised Steel	
Y	9	STREET LIGHTING	ROSE GARDENS	IMMINGHAM	518055.68	414953.24	1993		56266	1 Urbis LED	Teceo 48 LED 700mA	104 Watts	5.00 Metres	Galvanised Steel	
Y	10	STREET LIGHTING	ROSE GARDENS	IMMINGHAM	518094.04	415018.24	1993		56267	1 Urbis LED	Teceo 48 LED 700mA	104 Watts	5.00 Metres	Galvanised Steel	
Y	11	STREET LIGHTING	ROSE GARDENS	IMMINGHAM	518089.99	414995.96	1993		56268	Urbis	Axia 16 LED 350mA	19 Watts	5.00 Metres	Galvanised Steel	
Y	12	STREET LIGHTING	ROSE GARDENS	IMMINGHAM	518062.52	415004.5	1993		56269	Urbis	Axia 16 LED 350mA	19 Watts	5.00 Metres	Galvanised Steel	
Y	13	STREET LIGHTING	ROSE GARDENS	IMMINGHAM	518044.82	414997.45	2021	13/10/2021	68694	Urbis	Axia 16 LED 350mA	19 Watts	6.00 Metres	Galvanised Steel	
Y	14	STREET LIGHTING	ROSE GARDENS	IMMINGHAM	518052.14	414977.86	1993		56271	Urbis	Axia 16 LED 350mA	19 Watts	5.00 Metres	Galvanised Steel	
Y	1	STREET LIGHTING	ST ANDREWS COURT	IMMINGHAM	517442.4	414984.06	2005		57562	Urbis	Axia 8 LED 350mA	10 Watts	5.00 Metres	Stainless Steel	
Y	2	STREET LIGHTING	ST ANDREWS COURT	IMMINGHAM	517428.83	414963.47	2006		57563	Urbis	Axia 16 LED 350mA	19 Watts	6.00 Metres	Stainless Steel	
Y	3	STREET LIGHTING	ST ANDREWS COURT	IMMINGHAM	517409.33	414948.35	2006		57564	Urbis	Axia 16 LED 350mA	19 Watts	6.00 Metres	Galvanised Steel	
Y	4	STREET LIGHTING	ST ANDREWS COURT	IMMINGHAM	517416.3	414921.2	2006		57565	Urbis	Axia 16 LED 350mA	19 Watts	6.00 Metres	Galvanised Steel	
Y	5	STREET LIGHTING	ST ANDREWS COURT	IMMINGHAM	517467.56	414939.16	2006		57566	Urbis	Axia 8 LED 350mA	10 Watts	6.00 Metres	Galvanised Steel	
Y	6	STREET LIGHTING	ST ANDREWS COURT	IMMINGHAM	517454.91	414947.51	2006		57567	Urbis	Axia 8 LED 350mA	10 Watts	6.00 Metres	Galvanised Steel	
Y	1	STREET LIGHTING	HOMESTEAD PARK	IMMINGHAM	517859.89	415247.63	2014	31/03/2014	50989	1 Urbis LED	Axia 16 LED 500mA	28 Watts	6.00 Metres	Steel	
Y	2	STREET LIGHTING	HOMESTEAD PARK	IMMINGHAM	517853.51	415282.46	2014	31/03/2014	50990	1 Urbis LED	Axia 16 LED 500mA	28 Watts	6.00 Metres	Steel	
Y	3	STREET LIGHTING	HOMESTEAD PARK	IMMINGHAM	517849.66	415315.27	2014	31/03/2014	50991	1 Urbis LED	Axia 16 LED 500mA	28 Watts	6.00 Metres	Steel	
Y	4	STREET LIGHTING	HOMESTEAD PARK	IMMINGHAM	517856.73	415338.44	1996		50992	1 Urbis LED	Axia 16 LED 500mA	28 Watts	5.00 Metres	Galvanised Steel	
Y	5	STREET LIGHTING	HOMESTEAD PARK	IMMINGHAM	517879	415362.81	2014	31/03/2014	50993	1 Urbis LED	Axia 16 LED 500mA	28 Watts	6.00 Metres	Steel	
Y	1	STREET LIGHTING	VIKING CLOSE	IMMINGHAM	517228.21	414877.59	1986		59626	Urbis	Axia 16 LED 350mA	19 Watts	5.00 Metres	Galvanised Steel	
Y	2	STREET LIGHTING	VIKING CLOSE	IMMINGHAM	517224.79	414847.78	1986		59627	Urbis	Axia 16 LED 350mA	19 Watts	5.00 Metres	Galvanised Steel	
Y	3	STREET LIGHTING	VIKING CLOSE	IMMINGHAM	517233.4	414822.47	1986		59628	Urbis	Axia 16 LED 350mA	19 Watts	5.00 Metres	Galvanised Steel	
Y	2	STREET LIGHTING	BROCKLESBY ROAD	HABROUGH	514605.17	413548.44	1991		44838	1 Urbis LED	Teceo 48 LED 700mA	104 Watts	8.00 Metres	Galvanised Steel	
Y	3	STREET LIGHTING	BROCKLESBY ROAD	HABROUGH	514624.16	413516.92	1991		44839	1 Urbis LED	Teceo 48 LED 700mA	104 Watts	8.00 Metres	Galvanised Steel	
Y	4	STREET LIGHTING	BROCKLESBY ROAD	HABROUGH	514628.26	413484.15	1991		44840	1 Urbis LED	Teceo 48 LED 500mA	79 Watts	8.00 Metres	Galvanised Steel	
Y	5	STREET LIGHTING	BROCKLESBY ROAD	HABROUGH	514663.58	413444.96	2014	27/08/2014	62738	1 Urbis LED	Teceo 48 LED 500mA	79 Watts	8.00 Metres	Galvanised Steel	
Y	6	STREET LIGHTING	BROCKLESBY ROAD	HABROUGH	514684.34	413407.18	2014	25/07/2014	62732	1 Urbis LED	Teceo 48 LED 500mA	79 Watts	8.00 Metres	Galvanised Steel	
Y	7	STREET LIGHTING	BROCKLESBY ROAD	HABROUGH	514704.34	413370.34	2014	25/07/2014	62733	1 Urbis LED	Teceo 48 LED 500mA	79 Watts	8.00 Metres	Galvanised Steel	
Y	8	STREET LIGHTING	BROCKLESBY ROAD	HABROUGH	514730.36	413323.66	2007		44844	1 Urbis LED	Teceo 48 LED 500mA	79 Watts	8.00 Metres	Steel	
Y	9	STREET LIGHTING	BROCKLESBY ROAD	HABROUGH	514756.54	413275.34	2007		44845	1 Urbis LED	Teceo 48 LED 500mA	79 Watts	8.00 Metres	Steel	
Y	10	STREET LIGHTING	BROCKLESBY ROAD	HABROUGH	514782.67	413227.13	2007		44846	1 Urbis LED	Teceo 48 LED 500mA	79 Watts	8.00 Metres	Steel	
Y	11	STREET LIGHTING	BROCKLESBY ROAD	HABROUGH	514807.38	413181.38	2014	25/07/2014	62734	1 Urbis LED	Teceo 48 LED 500mA	79 Watts	8.00 Metres	Galvanised Steel	
Y	12	STREET LIGHTING	BROCKLESBY ROAD	HABROUGH	514832.09	413135.61	2014	25/07/2014	62735	1 Urbis LED	Teceo 48 LED 500mA	79 Watts	8.00 Metres	Galvanised Steel	
Y	13	STREET LIGHTING	BROCKLESBY ROAD	HABROUGH	514857.4	413088.52	2014	25/07/2014	62736	1 Urbis LED	Teceo 48 LED 500mA	79 Watts	8.00 Metres	Galvanised Steel	
Y	14	STREET LIGHTING	BROCKLESBY ROAD	HABROUGH	514878.27	413041.27	2014	25/07/2014	62737	1 Urbis LED	Teceo 48 LED 500mA	79 Watts	8.00 Metres	Galvanised Steel	
Y	1	STREET LIGHTING	CHAPEL LANE	HABROUGH	514572.91	413845.27	1990		45596	Urbis	Axia 16 LED 350mA	19 Watts	5.00 Metres	Galvanised Steel	
Y	2	STREET LIGHTING	CHAPEL LANE	HABROUGH	514551.77	413873.63	1989		45597	Urbis	Axia 16 LED 350mA	19 Watts	5.00 Metres	Galvanised Steel	
Y	3	STREET LIGHTING	CHAPEL LANE	HABROUGH	514528.78	413897.79	1989		45598	Urbis	Axia 16 LED 350mA	19 Watts	5.00 Metres	Galvanised Steel	

Y	1	STREET LIGHTING	NEWSHAM LANE	HABROUGH	514581.31	413557.95	2021	29/03/2021	68159	Urbis	Axia 24 LED 500mA	28 Watts	8.00 Metres	Galvanised Steel	
Y	2	STREET LIGHTING	NEWSHAM LANE	HABROUGH	514551.25	413546.23	1992		54152	1 Urbis LED	Axia 16 LED 500mA	28 Watts	8.00 Metres	Galvanised Steel	
Y	3	STREET LIGHTING	NEWSHAM LANE	HABROUGH	514520.36	413530.69	1993		54153	1 Urbis LED	Axia 16 LED 500mA	28 Watts	5.00 Metres	Galvanised Steel	
Y	4	STREET LIGHTING	NEWSHAM LANE	HABROUGH	514488.2	413518.73	1993		54154	1 Urbis LED	Axia 16 LED 500mA	28 Watts	5.00 Metres	Galvanised Steel	
Y	5	STREET LIGHTING	NEWSHAM LANE	HABROUGH	514456.53	413507.47	1993		54155	1 Urbis LED	Axia 16 LED 500mA	28 Watts	5.00 Metres	Galvanised Steel	
Y	6	STREET LIGHTING	NEWSHAM LANE	HABROUGH	514422.31	413498.51	1993		54156	1 Urbis LED	Axia 16 LED 500mA	28 Watts	5.00 Metres	Galvanised Steel	
Y	7	STREET LIGHTING	NEWSHAM LANE	HABROUGH	514388.13	413490.47	1993		54157	1 Urbis LED	Axia 16 LED 500mA	28 Watts	5.00 Metres	Galvanised Steel	
Y	8	STREET LIGHTING	NEWSHAM LANE	HABROUGH	514352.69	413487.94	1993		54158	1 Urbis LED	Axia 16 LED 500mA	28 Watts	5.00 Metres	Galvanised Steel	
Y	1	STREET LIGHTING	ST MARGARETS CRESCENT	HABROUGH	514791.99	413757.06	1990		57799	Urbis	Axia 16 LED 350mA	19 Watts	5.00 Metres	Galvanised Steel	
Y	2	STREET LIGHTING	ST MARGARETS CRESCENT	HABROUGH	514764.14	413743.46	1990		57800	Urbis	Axia 16 LED 350mA	19 Watts	5.00 Metres	Galvanised Steel	
Y	3	STREET LIGHTING	ST MARGARETS CRESCENT	HABROUGH	514734.39	413727.45	1990		57801	Urbis	Axia 16 LED 350mA	19 Watts	5.00 Metres	Galvanised Steel	
Y	4	STREET LIGHTING	ST MARGARETS CRESCENT	HABROUGH	514705.79	413714.72	1985		57802	Urbis	Axia 16 LED 350mA	19 Watts	5.00 Metres	Galvanised Steel	
Y	5	STREET LIGHTING	ST MARGARETS CRESCENT	HABROUGH	514675.28	413722.26	1990		57803	Urbis	Axia 16 LED 350mA	19 Watts	5.00 Metres	Galvanised Steel	
Y	6	STREET LIGHTING	ST MARGARETS CRESCENT	HABROUGH	514653.89	413749.24	1990		57804	Urbis	Axia 16 LED 350mA	19 Watts	5.00 Metres	Galvanised Steel	
Y	7	STREET LIGHTING	ST MARGARETS CRESCENT	HABROUGH	514647.21	413777.68	1990		57805	Urbis	Axia 16 LED 350mA	19 Watts	5.00 Metres	Galvanised Steel	
Y	8	STREET LIGHTING	ST MARGARETS CRESCENT	HABROUGH	514628.73	413803.12	1990		57806	Urbis	Axia 16 LED 350mA	19 Watts	5.00 Metres	Galvanised Steel	
Y	9	STREET LIGHTING	ST MARGARETS CRESCENT	HABROUGH	514605.32	413815.61	1990		57807	Urbis	Axia 16 LED 350mA	19 Watts	5.00 Metres	Galvanised Steel	
Y	1	STREET LIGHTING	STATION ROAD	HABROUGH	514596.38	413570.4	1990		58216	1 Urbis LED	Teceo 40 LED 500mA	64 Watts	8.00 Metres	Galvanised Steel	
Y	2	STREET LIGHTING	STATION ROAD	HABROUGH	514614.86	413588.94	1990		58217	1 Urbis LED	Teceo 40 LED 500mA	64 Watts	8.00 Metres	Galvanised Steel	
Y	3	STREET LIGHTING	STATION ROAD	HABROUGH	514646.75	413595.81	2021	29/03/2021	68160	Urbis	Teceo 40 LED 500mA	64 Watts	8.00 Metres	Galvanised Steel	
Y	4	STREET LIGHTING	STATION ROAD	HABROUGH	514667.39	413610.46	1991		58219	1 Urbis LED	Teceo 40 LED 500mA	64 Watts	8.00 Metres	Galvanised Steel	
Y	5	STREET LIGHTING	STATION ROAD	HABROUGH	514691.92	413627.78	1991		58220	1 Urbis LED	Teceo 40 LED 500mA	64 Watts	8.00 Metres	Galvanised Steel	
Y	6	STREET LIGHTING	STATION ROAD	HABROUGH	514715.42	413643.25	1991		58221	1 Urbis LED	Teceo 40 LED 500mA	64 Watts	8.00 Metres	Galvanised Steel	
Y	7	STREET LIGHTING	STATION ROAD	HABROUGH	514740.13	413659.76	1991		58222	1 Urbis LED	Teceo 40 LED 500mA	64 Watts	8.00 Metres	Galvanised Steel	
Y	8	STREET LIGHTING	STATION ROAD	HABROUGH	514758.9	413681.84	1990		58223	1 Urbis LED	Teceo 40 LED 500mA	64 Watts	8.00 Metres	Galvanised Steel	
Y	9	STREET LIGHTING	STATION ROAD	HABROUGH	514784.68	413698.69	1990		58224	1 Urbis LED	Teceo 40 LED 500mA	64 Watts	8.00 Metres	Galvanised Steel	
Y	10	STREET LIGHTING	STATION ROAD	HABROUGH	514809.54	413715.36	1991		58225	1 Urbis LED	Teceo 40 LED 500mA	64 Watts	8.00 Metres	Galvanised Steel	
Y	11	STREET LIGHTING	STATION ROAD	HABROUGH	514837.15	413721.98	1991		58226	1 Urbis LED	Teceo 40 LED 500mA	64 Watts	8.00 Metres	Galvanised Steel	
Y	12	STREET LIGHTING	STATION ROAD	HABROUGH	514855.2	413745.09	1990		58227	1 Urbis LED	Teceo 40 LED 500mA	64 Watts	8.00 Metres	Galvanised Steel	
Y	13	STREET LIGHTING	STATION ROAD	HABROUGH	514880.24	413761.75	1991		58228	1 Urbis LED	Teceo 40 LED 500mA	64 Watts	8.00 Metres	Galvanised Steel	
Y	14	STREET LIGHTING	STATION ROAD	HABROUGH	514904.65	413778.1	1990		58229	1 Urbis LED	Teceo 40 LED 500mA	64 Watts	8.00 Metres	Galvanised Steel	
Y	15	STREET LIGHTING	STATION ROAD	HABROUGH	514925.64	413791.54	1990		58230	1 Urbis LED	Teceo 40 LED 500mA	64 Watts	8.00 Metres	Galvanised Steel	
Y	16	STREET LIGHTING	STATION ROAD	HABROUGH	514947.73	413806.55	1990		58231	1 Urbis LED	Teceo 40 LED 500mA	64 Watts	8.00 Metres	Galvanised Steel	
Y	17	STREET LIGHTING	STATION ROAD	HABROUGH	514972.04	413822.48	1990		58232	1 Urbis LED	Teceo 40 LED 500mA	64 Watts	8.00 Metres	Galvanised Steel	
Y	18	STREET LIGHTING	STATION ROAD	HABROUGH	514998.86	413841.24	2023	18/04/2023	69222	Urbis	Teceo 40 LED 500mA	64 Watts	8.00 Metres	Galvanised Steel	
Y	19	STREET LIGHTING	STATION ROAD	HABROUGH	515023.22	413855.19	1990		58234	1 Urbis LED	Teceo 40 LED 500mA	64 Watts	8.00 Metres	Galvanised Steel	
Y	20	STREET LIGHTING	STATION ROAD	HABROUGH	515049.17	413873.86	1990		58235	1 Urbis LED	Teceo 40 LED 500mA	64 Watts	8.00 Metres	Galvanised Steel	
Y	21	STREET LIGHTING	STATION ROAD	HABROUGH	515071.95	413888.48	1990		58236	1 Urbis LED	Teceo 40 LED 500mA	64 Watts	8.00 Metres	Galvanised Steel	
Y	22	STREET LIGHTING	STATION ROAD	HABROUGH	515095.12	413903.86	1991		58237	1 Urbis LED	Teceo 40 LED 500mA	64 Watts	8.00 Metres	Galvanised Steel	
Y	23	STREET LIGHTING	STATION ROAD	HABROUGH	515125.25	413912.4	1991		58238	1 Urbis LED	Teceo 40 LED 500mA	64 Watts	8.00 Metres	Galvanised Steel	
Y	24	STREET LIGHTING	STATION ROAD	HABROUGH	515149.61	413927.77	1990		58239	1 Urbis LED	Teceo 40 LED 500mA	64 Watts	8.00 Metres	Galvanised Steel	
Y	25	STREET LIGHTING	STATION ROAD	HABROUGH	515174.67	413944.16	2003		58240	1 Urbis LED	Teceo 40 LED 500mA	64 Watts	8.00 Metres	Stainless Steel	
Y	26	STREET LIGHTING	STATION ROAD	HABROUGH	515199.86	413960.8	1990		58241	1 Urbis LED	Teceo 40 LED 500mA	64 Watts	8.00 Metres	Galvanised Steel	
Y	27	STREET LIGHTING	STATION ROAD	HABROUGH	515224.67	413977.45	1990		58242	1 Urbis LED	Teceo 40 LED 500mA	64 Watts	8.00 Metres	Galvanised Steel	
Y	28	STREET LIGHTING	STATION ROAD	HABROUGH	515250.01	413993.89	1990		58243	1 Urbis LED	Teceo 40 LED 500mA	64 Watts	8.00 Metres	Galvanised Steel	
Y	29	STREET LIGHTING	STATION ROAD	HABROUGH	515274.6	414011.09	1990		58244	1 Urbis LED	Teceo 40 LED 500mA	64 Watts	8.00 Metres	Galvanised Steel	
Y	30	STREET LIGHTING	STATION ROAD	HABROUGH	515281.44	414026.72	1990		58245	1 Urbis LED	Teceo 40 LED 500mA	64 Watts	8.00 Metres	Galvanised Steel	
Y	31	STREET LIGHTING	STATION ROAD	HABROUGH	515297.51	414026.66	1990		58246	1 Urbis LED	Teceo 40 LED 500mA	64 Watts	8.00 Metres	Galvanised Steel	
Y	32	STREET LIGHTING	STATION ROAD	HABROUGH	515322.7	414043.3	1990		58247	1 Urbis LED	Teceo 40 LED 500mA	64 Watts	8.00 Metres	Galvanised Steel	
Y	33	STREET LIGHTING	STATION ROAD	HABROUGH	515346.62	414058.43	1990		58248	1 Urbis LED	Teceo 40 LED 500mA	64 Watts	8.00 Metres	Galvanised Steel	
Y	34	STREET LIGHTING	STATION ROAD	HABROUGH	515370.93	414075.33	1990		58249	1 Urbis LED	Teceo 40 LED 500mA	64 Watts	8.00 Metres	Galvanised Steel	
Y	35	STREET LIGHTING	STATION ROAD	HABROUGH	515393.46	414095.45	1990		58250	1 Urbis LED	Teceo 40 LED 500mA	64 Watts	8.00 Metres	Galvanised Steel	
Y	36	STREET LIGHTING	STATION ROAD	HABROUGH	515417.13	414123.49	1990		58251	1 Urbis LED	Teceo 40 LED 500mA	64 Watts	8.00 Metres	Galvanised Steel	
Y	37	STREET LIGHTING	STATION ROAD	HABROUGH	515434.09	414149.69	2005		58252	1 Urbis LED	Teceo 40 LED 500mA	64 Watts	8.00 Metres	Stainless Steel	
Y	38	STREET LIGHTING	STATION ROAD	HABROUGH	515448.64	414182.12	1990		58253	1 Urbis LED	Teceo 40 LED 500mA	64 Watts	8.00 Metres	Galvanised Steel	
Y	39	STREET LIGHTING	STATION ROAD	HABROUGH	515442.95	414194.57	2003		58254	1 Urbis LED	Teceo 40 LED 500mA	64 Watts	10.00 Metres	Stainless Steel	
Y	40	STREET LIGHTING	STATION ROAD	HABROUGH	515456.49	414211.72	1990		58255	1 Urbis LED	Teceo 40 LED 500mA	64 Watts	8.00 Metres	Galvanised Steel	
Y	41	STREET LIGHTING	STATION ROAD	HABROUGH	515461.05	414237.73	1990		58256	1 Urbis LED	Teceo 40 LED 500mA	64 Watts	8.00 Metres	Galvanised Steel	
Y	42	STREET LIGHTING	STATION ROAD	HABROUGH	515461.87	414263.87	1990		58257	1 Urbis LED	Teceo 40 LED 500mA	64 Watts	8.00 Metres	Galvanised Steel	
Y	43	STREET LIGHTING	STATION ROAD	HABROUGH	515463.01	414291.02	1990		58258	1 Urbis LED	Teceo 40 LED 500mA	64 Watts	8.00 Metres	Galvanised Steel	
Y	44	STREET LIGHTING	STATION ROAD	HABROUGH	515465.03	414319.5	1990		58259	1 Urbis LED	Teceo 40 LED 500mA	64 Watts	8.00 Metres	Galvanised Steel	
Y	1	STREET LIGHTING	WADDINGHAM PLACE	HABROUGH	514667.31	413765.51	1990		59669	Urbis	Axia 16 LED 350mA	19 Watts	5.00 Metres	Galvanised Steel	
Y	2	STREET LIGHTING	WADDINGHAM PLACE	HABROUGH	514699.84	413777.09	1990		59670	Urbis	Axia 16 LED 350mA	19 Watts	5.00 Metres	Galvanised Steel	
Y	3	STREET LIGHTING	WADDINGHAM PLACE	HABROUGH	514726.42	413794.88	1985		59671	Urbis	Axia 16 LED 350mA	19 Watts	5.00 Metres	Galvanised Steel	
Y	1	STREET LIGHTING	AIRE CLOSE	IMMINGHAM	517445.12	414352.47	2002		42794	Urbis	Axia 16 LED 350mA	19 Watts	6.00 Metres	Stainless Steel	
Y	2	STREET LIGHTING	AIRE CLOSE	IMMINGHAM	517477.44	414360.83	1980		42795	Urbis	Axia 16 LED 350mA	19 Watts	5.00 Metres	Galvanised Steel	
Y	3	STREET LIGHTING	AIRE CLOSE	IMMINGHAM	517493.67	414385.31	1980		42796	Urbis	Axia 8 LED 350mA	10 Watts	5.00 Metres	Galvanised Steel	
Y	4	STREET LIGHTING	AIRE CLOSE	IMMINGHAM	517507.54	414353.13	1980		42797	Urbis	Axia 16 LED 350mA	19 Watts	5.00 Metres	Galvanised Steel	
Y	1	STREET LIGHTING	ANCHOLME AVENUE	IMMINGHAM	517362.86	414301.31	1980		43191	Urbis	Axia 16 LED 350mA	19 Watts	5.00 Metres	Galvanised Steel	
Y	2	STREET LIGHTING	ANCHOLME AVENUE	IMMINGHAM	517336.64	414293.68	2021	18/02/2021	68302	Urbis	Axia 16 LED 350mA	19 Watts	6.00 Metres	Galvanised Steel	
Y	3	STREET LIGHTING	ANCHOLME AVENUE	IMMINGHAM	517328.07	414263.31	1980		43193	Urbis	Axia 8 LED 350mA	10 Watts	5.00 Metres	Galvanised Steel	
Y	4	STREET LIGHTING	ANCHOLME AVENUE	IMMINGHAM	517308.3	414279.04	1980		43194	Urbis	Axia 16 LED 350mA	19 Watts	5.00 Metres	Galvanised Steel	
Y	5	STREET LIGHTING	ANCHOLME AVENUE	IMMINGHAM	517300.07	414271.4	2023	14/02/2023	69207	Urbis	Axia 16 LED 350mA	19 Watts	6.00 Metres	Galvanised Steel	
Y	6	STREET LIGHTING	ANCHOLME AVENUE	IMMINGHAM	517274.28	414243.37	1980		43196	Urbis	Axia 16 LED 350mA	19 Watts	5.00 Metres	Galvanised Steel	
Y	7	STREET LIGHTING	ANCHOLME AVENUE	IMMINGHAM	517281.46	414296.38	1980		43197	Urbis	Axia 16 LED 350mA	19 Watts	5.00 Metres	Galvanised Steel	
Y	8	STREET LIGHTING	ANCHOLME AVENUE	IMMINGHAM	517276.15	414328.34	1980		43198	Urbis	Axia 16 LED 350mA	19 Watts	5.00 Metres	Galvanised Steel	
Y	9	STREET LIGHTING	ANCHOLME AVENUE	IMMINGHAM	517275.39	414356.82	1980		43199	Urbis	Axia 16 LED 350mA	19 Watts	5.00 Metres	Galvanised Steel	
Y	10	STREET LIGHTING	ANCHOLME AVENUE	IMMINGHAM	517275.64	414384.94	1980		43200	Urbis	Axia 16 LED 350mA	19 Watts	5.00 Metres	Galvanised Steel	
Y	11	STREET LIGHTING	ANCHOLME AVENUE	IMMINGHAM	517280.7	414408.17	1980		43201	Urbis	Axia 16 LED 350mA	19 Watts	5.00 Metres	Galvanised Steel	
Y	12	STREET LIGHTING	ANCHOLME AVENUE	IMMINGHAM	517307.41	414413.95	2013		43202	Urbis	Axia 16 LED 350mA	19 Watts	6.00 Metres	Steel	
Y	13	STREET LIGHTING	ANCHOLME AVENUE	IMMINGHAM	517299.11	414452.13	2013		43203	Urbis	Axia 16 LED 350mA	19 Watts	6.00 Metres	Steel	
Y	1	STREET LIGHTING	CALDER CLOSE	IMMINGHAM	517380.13	414249.29	2013	13/08/2013	45105	Urbis	Axia 16 LED 350mA	19 Watts	6.00 Metres	Steel	
Y	2	STREET LIGHTING	CALDER CLOSE	IMMINGHAM	517383.81	414279.54	1980		45106	Urbis	Axia 16 LED 350mA	19 Watts	5.00 Metres	Galvanised Steel	
Y	3	STREET LIGHTING	CALDER CLOSE	IMMINGHAM	517381.28	414313.02	1980		45107	Urbis	Axia 16 LED 350mA	19 Watts	5.00 Metres	Galvanised Steel	
Y	4	STREET LIGHTING	CALDER CLOSE	IMMINGHAM	517366.98	414343.52	1980		45108	Urbis	Axia 16 LED 350mA	19 Watts	5.00 Metres	Galvanised Steel	
Y	5	STREET LIGHTING	CALDER CLOSE	IMMINGHAM	517349.38	414376.24	1980		45109	Urbis	Axia 16 LED 350mA	19 Watts	5.00 Metres	Galvanised Steel	
Y	6	STREET LIGHTING	CALDER CLOSE	IMMINGHAM	517346.35	414402.7	1980		45110	Urbis	Axia 16 LED 350mA	19 Watts	5.00 Metres	Galvanised Steel	
Y	7	STREET LIGHTING	CALDER CLOSE	IMMINGHAM	517377.45	414400.03	1980		45111	Urbis	Axia 8 LED 350mA	10 Watts	5.00 Metres	Galvanised Steel	
Y	1	STREET LIGHTING	CHAPEL ROAD	HABROUGH	514689.5	413904.53	1990		45599	Urbis	Axia 16 LED 350mA	19 Watts	5.00 Metres	Galvanised Steel	
Y	2	STREET LIGHTING	CHAPEL ROAD	HABROUGH	514667.09	413887.38	1990		45600	Urbis	Axia 16 LED 350mA	19 Watts	5.00 Metres	Galvanised Steel	
Y	3	STREET LIGHTING	CHAPEL ROAD	HABROUGH	514638.87	413865.92	1990		45601	Urbis	Axia 16 LED 350mA	19 Watts	5.00 Metres	Galvanised Steel	
Y	4	STREET LIGHTING	CHAPEL ROAD	HABROUGH	514609.63	413844.4	1990		45602	Urbis	Axia 16 LED 350mA	19 Watts	5.00 Metres	Galvanised Steel	
Y	5	STREET LIGHTING	CHAPEL ROAD	HABROUGH	514587.56	413825.37	1990		45603	Urbis	Axia 16 LED 350mA	19 Watts	5.00 Metres	Galvanised Steel	
Y	6	STREET LIGHTING	CHAPEL ROAD	HABROUGH	514563.01	413805.43	1990		45604	Urbis	Axia 16 LED 350mA	19 Watts	5.00 Metres	Galvanised Steel	
Y	7	STREET LIGHTING	CHAPEL ROAD	HABROUGH	514539.34	413786.26	1990		45605	Urbis	Axia 16 LED 350mA	19 Watts	5.00 Metres	Galvanised Steel	
Y	8	STREET LIGHTING	CHAPEL ROAD	HABROUGH	514517.57	413768.35	1990		45606	Urbis	Axia 16 LED 350mA	19 Watts	5.00 Metres	Galvanised Steel	
Y	9	STREET LIGHTING	CHAPEL ROAD	HABROUGH	514492.63	413747.52	1990		45607	Urbis	Axia 16 LED 350mA	19 Watts	5.00 Metres	Galvanised Steel	
Y	10	STREET LIGHTING	CHAPEL ROAD	HABROUGH	514468.45	413728.22	1990		45608	Urbis	Axia 16 LED 350mA	19 Watts	5.00 Metres	Galvanised Steel	
Y	11	STREET LIGHTING	CHAPEL ROAD	HABROUGH	514445.88	413709.25	1990		45609	Urbis	Axia 16 LED 350mA	19 Watts	5.00 Metres	Galvanised Steel	
Y	1	STREET LIGHTING	HABROUGH ROAD	IMMINGHAM	517547.56	414317.09	2010	15/06/2010	68273	Urbis	Teceo 48 LED 500mA	79 Watts	10.00 Metres	Galvanised Steel	
Y	2	STREET LIGHTING	HABROUGH ROAD	IMMINGHAM	517537.61	414289.08	1985		49977	1 Urbis LED	Teceo 48 LED 500mA	79 Watts	8.00 Metres	Galvanised Steel	
Y	3	STREET LIGHTING	HABROUGH ROAD	IMMINGHAM	517512.09	414274.2	1985		49978	1 Urbis LED	Teceo 48 LED 500mA	79 Watts	8.00 Metres	Galvanised Steel	
Y	4	STREET LIGHTING	HABROUGH ROAD	IMMINGHAM	517485.16	414262.65	1985		49979	1 Urbis LED	Teceo 48 LED 500mA	79 Watts	8.00 Metres	Galvanised Steel	
Y	5	STREET LIGHTING	HABROUGH ROAD	IMMINGHAM	517459.03	414252.63	1985		49980	1 Urbis LED	Teceo 48 LED 500mA	79 Watts	8.00 Metres	Galvanised Steel	
Y	6	STREET LIGHTING	HABROUGH ROAD	IMMINGHAM	517429.26	414242.81	1985		49981	1 Urbis LED	Teceo 48 LED 500mA	79 Watts	8.00 Metres	Galvanised Steel	
Y	7	STREET LIGHTING	HABROUGH ROAD	IMMINGHAM	517396.45	414231.36	1985		49982	1 Urbis LED	Teceo 48 LED 500mA	79 Watts	8.00 Metres	Galvanised Steel	
Y	8	STREET LIGHTING	HABROUGH ROAD	IMMINGHAM	517366.57	414221.37	2022	06/01/2022	68798	Urbis	mpera Maxi 128 LED 700m	277 Watts	8.00 Metres	Galvanised Steel	
Y	9	STREET LIGHTING	HABROUGH ROAD	IMMINGHAM	517338.53	414212.93	1985		49984	1 Urbis LED	Teceo 48 LED 500mA	79 Watts	8.00 Metres	Galvanised Steel	
Y	10	STREET LIGHTING	HABROUGH ROAD	IMMINGHAM	517308.35	414205.54	1985		49985	1 Urbis LED	Teceo 48 LED 500mA	79 Watts	8.00 Metres	Galvanised Steel	
Y	11	STREET LIGHTING	HABROUGH ROAD	IMMINGHAM	517277.16	414201.8	1985		49986	1 Urbis LED	Teceo 48 LED 500mA	79 Watts	8.00 Metres	Galvanised Steel	

Y	12	STREET LIGHTING	HABROUGH ROAD	IMMINGHAM	517098.15	414251.13	2007		49987	1 Urbis LED	Teceo 40 LED 500mA	64 Watts	8.00 Metres	Stainless Steel	
Y	13	STREET LIGHTING	HABROUGH ROAD	IMMINGHAM	517075.27	414248.19	2007		49988	1 Urbis LED	Teceo 40 LED 500mA	64 Watts	8.00 Metres	Stainless Steel	
Y	14	STREET LIGHTING	HABROUGH ROAD	IMMINGHAM	517059.33	414264.87	2007		49989	1 Urbis LED	Teceo 40 LED 500mA	64 Watts	8.00 Metres	Stainless Steel	
Y	15	STREET LIGHTING	HABROUGH ROAD	IMMINGHAM	517036.9	414256.81	2007		49990	1 Urbis LED	Teceo 40 LED 500mA	64 Watts	8.00 Metres	Stainless Steel	
Y	16	STREET LIGHTING	HABROUGH ROAD	IMMINGHAM	517018.48	414274.89	2007		49991	1 Urbis LED	Teceo 40 LED 500mA	64 Watts	8.00 Metres	Stainless Steel	
Y	17	STREET LIGHTING	HABROUGH ROAD	IMMINGHAM	516996.73	414266.03	2007		49992	1 Urbis LED	Teceo 40 LED 500mA	64 Watts	8.00 Metres	Stainless Steel	
Y	18	STREET LIGHTING	HABROUGH ROAD	IMMINGHAM	516973.99	414282.07	2009		49993	1 Urbis LED	Teceo 40 LED 500mA	64 Watts	8.00 Metres	Steel	
Y	19	STREET LIGHTING	HABROUGH ROAD	IMMINGHAM	516951.58	414272.19	2007		49994	1 Urbis LED	Teceo 40 LED 500mA	64 Watts	8.00 Metres	Stainless Steel	
Y	20	STREET LIGHTING	HABROUGH ROAD	IMMINGHAM	516931.94	414283.66	2007		49995	1 Urbis LED	Teceo 40 LED 500mA	64 Watts	8.00 Metres	Stainless Steel	
Y	1	STREET LIGHTING	KESTEVEN COURT	HABROUGH	514732	413901	2009		51570	Urbis	Axia 16 LED 350mA	19 Watts	6.00 Metres	Steel	
Y	2	STREET LIGHTING	KESTEVEN COURT	HABROUGH	514759	413918	2009		51571	Urbis	Axia 16 LED 350mA	19 Watts	6.00 Metres	Steel	
Y	3	STREET LIGHTING	KESTEVEN COURT	HABROUGH	514791	413929	2009		51572	Urbis	Axia 16 LED 350mA	19 Watts	6.00 Metres	Steel	
Y	4	STREET LIGHTING	KESTEVEN COURT	HABROUGH	514777	413993	2009		61666	Urbis	Axia 16 LED 350mA	19 Watts	6.00 Metres	Steel	
Y	4	STREET LIGHTING	KESTEVEN COURT	HABROUGH	514777	413993	2009		62198	Urbis	Axia 16 LED 350mA	19 Watts	6.00 Metres	Steel	
Y	5	STREET LIGHTING	KESTEVEN COURT	HABROUGH	514794	413967	2009		51573	Urbis	Axia 16 LED 350mA	19 Watts	6.00 Metres	Steel	
Y	6	STREET LIGHTING	KESTEVEN COURT	HABROUGH	514807	413939	2009		51574	Urbis	Axia 16 LED 350mA	19 Watts	6.00 Metres	Steel	
Y	7	STREET LIGHTING	KESTEVEN COURT	HABROUGH	514814	413910	2009		51575	Urbis	Axia 16 LED 350mA	19 Watts	6.00 Metres	Steel	
Y	8	STREET LIGHTING	KESTEVEN COURT	HABROUGH	514828	413889	2009		51576	Urbis	Axia 16 LED 350mA	19 Watts	6.00 Metres	Steel	
Y	9	STREET LIGHTING	KESTEVEN COURT	HABROUGH	514858	413860	2009		51577	Urbis	Axia 16 LED 350mA	19 Watts	6.00 Metres	Steel	
Y	10	STREET LIGHTING	KESTEVEN COURT	HABROUGH	514864	413842	2009		51578	1 Urbis LED	Teceo 48 LED 700mA	104 Watts	6.00 Metres	Steel	
Y	1	STREET LIGHTING	KILLINGHOLME ROAD	HABROUGH	515452.75	414336.15	1994		51592	1 Urbis LED	Teceo 40 LED 500mA	64 Watts	8.00 Metres	Galvanised Steel	
Y	2	STREET LIGHTING	KILLINGHOLME ROAD	HABROUGH	515466.42	414349.56	1994		51593	1 Urbis LED	Teceo 40 LED 500mA	64 Watts	8.00 Metres	Galvanised Steel	
Y	3	STREET LIGHTING	KILLINGHOLME ROAD	HABROUGH	515464.65	414373.3	1994		51594	1 Urbis LED	Teceo 40 LED 500mA	64 Watts	8.00 Metres	Galvanised Steel	
Y	4	STREET LIGHTING	KILLINGHOLME ROAD	HABROUGH	515453.64	414400.45	1994		51595	1 Urbis LED	Teceo 40 LED 500mA	64 Watts	8.00 Metres	Galvanised Steel	
Y	5	STREET LIGHTING	KILLINGHOLME ROAD	HABROUGH	515446.73	414428.67	1994		51596	1 Urbis LED	Teceo 40 LED 500mA	64 Watts	8.00 Metres	Galvanised Steel	
Y	6	STREET LIGHTING	KILLINGHOLME ROAD	HABROUGH	515440.27	414455.82	1994		51597	1 Urbis LED	Teceo 40 LED 500mA	64 Watts	8.00 Metres	Galvanised Steel	
Y	7	STREET LIGHTING	KILLINGHOLME ROAD	HABROUGH	515433.94	414483.02	1994		51598	1 Urbis LED	Teceo 40 LED 500mA	64 Watts	8.00 Metres	Galvanised Steel	
Y	8	STREET LIGHTING	KILLINGHOLME ROAD	HABROUGH	515427.24	414510.17	1994		51599	1 Urbis LED	Teceo 40 LED 500mA	64 Watts	8.00 Metres	Galvanised Steel	
Y	9	STREET LIGHTING	KILLINGHOLME ROAD	HABROUGH	515420.53	414537.77	1994		51600	1 Urbis LED	Teceo 40 LED 500mA	64 Watts	8.00 Metres	Galvanised Steel	
Y	10	STREET LIGHTING	KILLINGHOLME ROAD	HABROUGH	515413.57	414564.56	1994		51601	1 Urbis LED	Teceo 40 LED 500mA	64 Watts	8.00 Metres	Galvanised Steel	
Y	11	STREET LIGHTING	KILLINGHOLME ROAD	HABROUGH	515405.47	414595.21	1994		51602	1 Urbis LED	Teceo 40 LED 500mA	64 Watts	8.00 Metres	Galvanised Steel	
Y	1	STREET LIGHTING	LAURELS CLOSE	HABROUGH	514466.81	413746.13	1990		52375	Urbis	Axia 16 LED 350mA	19 Watts	5.00 Metres	Galvanised Steel	
Y	2	STREET LIGHTING	LAURELS CLOSE	HABROUGH	514462.76	413777.08	1990		52376	Urbis	Axia 16 LED 350mA	19 Watts	5.00 Metres	Galvanised Steel	
Y	3	STREET LIGHTING	LAURELS CLOSE	HABROUGH	514469.85	413802.59	1990		52377	Urbis	Axia 16 LED 350mA	19 Watts	5.00 Metres	Galvanised Steel	
Y	4	STREET LIGHTING	LAURELS CLOSE	HABROUGH	514477.7	413831.95	1990		52378	Urbis	Axia 16 LED 350mA	19 Watts	5.00 Metres	Galvanised Steel	
Y	5	STREET LIGHTING	LAURELS CLOSE	HABROUGH	514479.85	413864.74	1990		52379	Urbis	Axia 16 LED 350mA	19 Watts	5.00 Metres	Galvanised Steel	
Y	6	STREET LIGHTING	LAURELS CLOSE	HABROUGH	514498.33	413847.21	1990		52380	Urbis	Axia 16 LED 350mA	19 Watts	5.00 Metres	Galvanised Steel	
Y	1	STREET LIGHTING	RIBY ROAD	STALLINGBOROUGH	519508.88	411283.12	2017		56056	1 Urbis LED	Teceo 48 LED 500mA	79 Watts	10.00 Metres	Galvanised Steel	
Y	2	STREET LIGHTING	RIBY ROAD	STALLINGBOROUGH	519468.25	411249.2	2017		56057	1 Urbis LED	Teceo 48 LED 500mA	79 Watts	10.00 Metres	Galvanised Steel	
Y	3	STREET LIGHTING	RIBY ROAD	STALLINGBOROUGH	519465.42	411269.15	2017		56058	1 Urbis LED	Teceo 48 LED 500mA	79 Watts	10.00 Metres	Galvanised Steel	
Y	4	STREET LIGHTING	RIBY ROAD	STALLINGBOROUGH	519447.65	411249.31	2017		56059	1 Urbis LED	Teceo 48 LED 500mA	79 Watts	10.00 Metres	Galvanised Steel	
Y	5	STREET LIGHTING	RIBY ROAD	STALLINGBOROUGH	519409.22	411231.28	2014	31/03/2014	56060	1 Urbis LED	Teceo 32 LED 500mA	52 Watts	6.00 Metres	Steel	
Y	6	STREET LIGHTING	RIBY ROAD	STALLINGBOROUGH	519378.97	411216.66	2014	31/03/2014	56061	1 Urbis LED	Teceo 32 LED 500mA	52 Watts	6.00 Metres	Steel	
Y	1	STREET LIGHTING	STALLINGBOROUGH ROAD	IMMINGHAM	517576.55	414283.27	2002		58087	1 Urbis LED	Teceo 48 LED 700mA	104 Watts	10.00 Metres	Stainless Steel	
Y	2	STREET LIGHTING	STALLINGBOROUGH ROAD	IMMINGHAM	517592.97	414251.33	2002		58088	1 Urbis LED	Teceo 48 LED 700mA	104 Watts	10.00 Metres	Stainless Steel	
Y	3	STREET LIGHTING	STALLINGBOROUGH ROAD	IMMINGHAM	517600.69	414217.11	2002		58089	1 Urbis LED	Teceo 48 LED 700mA	104 Watts	10.00 Metres	Stainless Steel	
Y	4	STREET LIGHTING	STALLINGBOROUGH ROAD	IMMINGHAM	517601.46	414179.95	2002		58090	1 Urbis LED	Teceo 48 LED 700mA	104 Watts	10.00 Metres	Stainless Steel	
Y	5	STREET LIGHTING	STALLINGBOROUGH ROAD	IMMINGHAM	517593.63	414148.58	2002		58091	1 Urbis LED	Teceo 48 LED 700mA	104 Watts	10.00 Metres	Stainless Steel	
Y	6	STREET LIGHTING	STALLINGBOROUGH ROAD	IMMINGHAM	517598.24	414106.53	2002		58092	1 Urbis LED	Teceo 48 LED 700mA	104 Watts	10.00 Metres	Stainless Steel	
Y	7	STREET LIGHTING	STALLINGBOROUGH ROAD	IMMINGHAM	517615.42	414069.34	2002		58093	1 Urbis LED	Teceo 48 LED 700mA	104 Watts	10.00 Metres	Stainless Steel	
Y	8	STREET LIGHTING	STALLINGBOROUGH ROAD	IMMINGHAM	517627.81	414035.45	2002		58094	1 Urbis LED	Teceo 48 LED 700mA	104 Watts	10.00 Metres	Stainless Steel	
Y	9	STREET LIGHTING	STALLINGBOROUGH ROAD	IMMINGHAM	517627.5	413988.81	2002		58095	1 Urbis LED	Teceo 48 LED 700mA	104 Watts	10.00 Metres	Stainless Steel	
Y	10	STREET LIGHTING	STALLINGBOROUGH ROAD	IMMINGHAM	517639.17	413957.85	2002		58096	1 Urbis LED	Teceo 48 LED 700mA	104 Watts	10.00 Metres	Stainless Steel	
Y	11	STREET LIGHTING	STALLINGBOROUGH ROAD	IMMINGHAM	517649.95	413923.71	2002		58097	1 Urbis LED	Teceo 48 LED 700mA	104 Watts	10.00 Metres	Stainless Steel	
Y	12	STREET LIGHTING	STALLINGBOROUGH ROAD	IMMINGHAM	517660.28	413888.4	2002		58098	1 Urbis LED	Teceo 48 LED 700mA	104 Watts	10.00 Metres	Stainless Steel	
Y	13	STREET LIGHTING	STALLINGBOROUGH ROAD	IMMINGHAM	517671.87	413855.04	2002		58099	1 Urbis LED	Teceo 48 LED 700mA	104 Watts	10.00 Metres	Stainless Steel	
Y	14	STREET LIGHTING	STALLINGBOROUGH ROAD	IMMINGHAM	517685.45	413824.47	2002		58100	1 Urbis LED	Teceo 48 LED 700mA	104 Watts	10.00 Metres	Stainless Steel	
Y	15	STREET LIGHTING	STALLINGBOROUGH ROAD	IMMINGHAM	517706.27	413794.27	2002		58101	1 Urbis LED	Teceo 48 LED 700mA	104 Watts	10.00 Metres	Stainless Steel	
Y	16	STREET LIGHTING	STALLINGBOROUGH ROAD	IMMINGHAM	517740.21	413767.43	2002		58102	1 Urbis LED	Teceo 48 LED 700mA	104 Watts	10.00 Metres	Stainless Steel	
Y	17	STREET LIGHTING	STALLINGBOROUGH ROAD	IMMINGHAM	517762.19	413736.97	2002		58103	1 Urbis LED	Teceo 48 LED 700mA	104 Watts	10.00 Metres	Stainless Steel	
Y	18	STREET LIGHTING	STALLINGBOROUGH ROAD	IMMINGHAM	518146.27	412875.41	2009		58104	B.G.Energy		18 Watts	6.00 Metres	Galvanised Steel	
Y	19	STREET LIGHTING	STALLINGBOROUGH ROAD	IMMINGHAM	518221.22	412786.02	2009		58105	B.G.Energy		18 Watts	6.00 Metres	Galvanised Steel	
Y	1	STREET LIGHTING	STEEPING DRIVE	IMMINGHAM	517397.95	414262.82	1980		58437	Urbis	Axia 16 LED 350mA	19 Watts	5.00 Metres	Galvanised Steel	
Y	2	STREET LIGHTING	STEEPING DRIVE	IMMINGHAM	517427.07	414271.24	2015	30/07/2015	58438	Urbis	Axia 16 LED 350mA	19 Watts	6.00 Metres	Galvanised Steel	
Y	3	STREET LIGHTING	STEEPING DRIVE	IMMINGHAM	517445.29	414301.68	1980		58439	Urbis	Axia 16 LED 350mA	19 Watts	5.00 Metres	Galvanised Steel	
Y	4	STREET LIGHTING	STEEPING DRIVE	IMMINGHAM	517442.26	414333.33	1980		58440	Urbis	Axia 16 LED 350mA	19 Watts	5.00 Metres	Galvanised Steel	
Y	5	STREET LIGHTING	STEEPING DRIVE	IMMINGHAM	517423.4	414353.13	1980		58441	Urbis	Axia 16 LED 350mA	19 Watts	5.00 Metres	Galvanised Steel	
Y	6	STREET LIGHTING	STEEPING DRIVE	IMMINGHAM	517410.99	414388.07	1980		58442	Urbis	Axia 16 LED 350mA	19 Watts	5.00 Metres	Galvanised Steel	
Y	7	STREET LIGHTING	STEEPING DRIVE	IMMINGHAM	517422.51	414408.58	1980		58443	Urbis	Axia 16 LED 350mA	19 Watts	5.00 Metres	Galvanised Steel	
Y	8	STREET LIGHTING	STEEPING DRIVE	IMMINGHAM	517462.64	414417.38	1980		58444	Urbis	Axia 16 LED 350mA	19 Watts	5.00 Metres	Galvanised Steel	
Y	9	STREET LIGHTING	STEEPING DRIVE	IMMINGHAM	517494.03	414417.95	1980		58445	Urbis	Axia 16 LED 350mA	19 Watts	5.00 Metres	Galvanised Steel	
Y	1	STREET LIGHTING	WEST END ROAD	HABROUGH	514583.21	413574.77	1990		60305	Urbis	Axia 16 LED 350mA	19 Watts	5.00 Metres	Galvanised Steel	
Y	2	STREET LIGHTING	WEST END ROAD	HABROUGH	514559.92	413588.37	1990		60306	Urbis	Axia 16 LED 350mA	19 Watts	5.00 Metres	Galvanised Steel	
Y	3	STREET LIGHTING	WEST END ROAD	HABROUGH	514537.65	413608.81	1990		60307	Urbis	Axia 16 LED 350mA	19 Watts	5.00 Metres	Galvanised Steel	
Y	4	STREET LIGHTING	WEST END ROAD	HABROUGH	514511.82	413630.77	1990		60308	Urbis	Axia 16 LED 350mA	19 Watts	5.00 Metres	Galvanised Steel	
Y	5	STREET LIGHTING	WEST END ROAD	HABROUGH	514487.27	413646.53	1990		60309	Urbis	Axia 16 LED 350mA	19 Watts	5.00 Metres	Galvanised Steel	
Y	6	STREET LIGHTING	WEST END ROAD	HABROUGH	514461.57	413662.55	1990		60310	Urbis	Axia 16 LED 350mA	19 Watts	5.00 Metres	Galvanised Steel	
Y	7	STREET LIGHTING	WEST END ROAD	HABROUGH	514443.6	413682.99	1990		60311	Urbis	Axia 16 LED 350mA	19 Watts	5.00 Metres	Galvanised Steel	
Y	2	STREET LIGHTING	IMMINGHAM ROAD	HABROUGH	515510.87	414336.62	2002		51252	1 Urbis LED	Teceo 48 LED 700mA	104 Watts	8.00 Metres	Stainless Steel	
Y	3	STREET LIGHTING	IMMINGHAM ROAD	HABROUGH	515547.47	414320.45	2002		51253	1 Urbis LED	Teceo 48 LED 700mA	104 Watts	8.00 Metres	Stainless Steel	
Y	4	STREET LIGHTING	IMMINGHAM ROAD	HABROUGH	515579.48	414323.09	2002		51254	1 Urbis LED	Teceo 48 LED 700mA	104 Watts	8.00 Metres	Stainless Steel	
Y	5	STREET LIGHTING	IMMINGHAM ROAD	HABROUGH	515614.17	414326.91	2002		51255	1 Urbis LED	Teceo 48 LED 700mA	104 Watts	8.00 Metres	Stainless Steel	
Y	6	STREET LIGHTING	IMMINGHAM ROAD	HABROUGH	515647.96	414336.46	2002		51256	1 Urbis LED	Teceo 48 LED 700mA	104 Watts	8.00 Metres	Stainless Steel	
Y	7	STREET LIGHTING	IMMINGHAM ROAD	HABROUGH	515680.69	414344.24	2002		51257	1 Urbis LED	Teceo 48 LED 700mA	104 Watts	8.00 Metres	Stainless Steel	
Y	8	STREET LIGHTING	IMMINGHAM ROAD	HABROUGH	515715.66	414352.51	2002		51258	1 Urbis LED	Teceo 48 LED 700mA	104 Watts	8.00 Metres	Stainless Steel	
Y	9	STREET LIGHTING	IMMINGHAM ROAD	HABROUGH	515749.51	414360.38	2002		51259	1 Urbis LED	Teceo 48 LED 700mA	104 Watts	8.00 Metres	Stainless Steel	
Y	10	STREET LIGHTING	IMMINGHAM ROAD	HABROUGH	515783.72	414378.95	2009		51260	1 Urbis LED	Teceo 48 LED 700mA	104 Watts	8.00 Metres	Steel	
Y	11	STREET LIGHTING	IMMINGHAM ROAD	HABROUGH	515810.31	414393.79	2002		51261	1 Urbis LED	Teceo 48 LED 700mA	104 Watts	8.00 Metres	Stainless Steel	
Y	12	STREET LIGHTING	IMMINGHAM ROAD	HABROUGH	515837.91	414425.28	2002		51262	1 Urbis LED	Teceo 48 LED 700mA	104 Watts	8.00 Metres	Stainless Steel	
Y	13	STREET LIGHTING	IMMINGHAM ROAD	HABROUGH	515871.24	414429.77	2005		51263	1 Urbis LED	Teceo 48 LED 700mA	104 Watts	8.00 Metres	Stainless Steel	
Y	14	STREET LIGHTING	IMMINGHAM ROAD	HABROUGH	515903.66	414427.69	2002		51264	1 Urbis LED	Teceo 48 LED 700mA	104 Watts	8.00 Metres	Stainless Steel	
Y	15	STREET LIGHTING	IMMINGHAM ROAD	HABROUGH	515932.52	414424.25	2002		51265	1 Urbis LED	Teceo 48 LED 700mA	104 Watts	8.00 Metres	Stainless Steel	
Y	16	STREET LIGHTING	IMMINGHAM ROAD	HABROUGH	515966.99	414419.6	2002		51266	1 Urbis LED	Teceo 48 LED 700mA	104 Watts	8.00 Metres	Stainless Steel	
Y	17	STREET LIGHTING	IMMINGHAM ROAD	HABROUGH	516005.5	414408.08	2003		51267	1 Urbis LED	Teceo 48 LED 700mA	104 Watts	8.00 Metres	Stainless Steel	
Y	18	STREET LIGHTING	IMMINGHAM ROAD	HABROUGH	516038.43	414389.07	2008		51268	1 Urbis LED	Teceo 48 LED 700mA	104 Watts	8.00 Metres	Steel	
Y	19	STREET LIGHTING	IMMINGHAM ROAD	HABROUGH	516070.22	414372.19	2008		51269	1 Urbis LED	Teceo 48 LED 700mA	104 Watts	8.00 Metres	Steel	
Y	20	STREET LIGHTING	IMMINGHAM ROAD	HABROUGH	516103.7	414370.07	2009		51270	1 Urbis LED	Teceo 48 LED 700mA	104 Watts	8.00 Metres	Steel	
Y	21	STREET LIGHTING	IMMINGHAM ROAD	HABROUGH	516141.56	414371.48	2002		51271	1 Urbis LED	Teceo 48 LED 700mA	104 Watts	8.00 Metres	Stainless Steel	
Y	22	STREET LIGHTING	IMMINGHAM ROAD	HABROUGH	516177.87	414371.53	2005		51272	1 Urbis LED	Teceo 48 LED 700mA	104 Watts	8.00 Metres	Stainless Steel	
Y	23	STREET LIGHTING	IMMINGHAM ROAD	HABROUGH	516212.97	414370.24	2002		51273	1 Urbis LED	Teceo 48 LED 700mA	104 Watts	8.00 Metres	Stainless Steel	
Y	24	STREET LIGHTING	IMMINGHAM ROAD	HABROUGH	516251.84	414367.85	2002		51274	1 Urbis LED	Teceo 48 LED 700mA	104 Watts	8.00 Metres	Stainless Steel	
Y	25	STREET LIGHTING	IMMINGHAM ROAD	HABROUGH	516286.9	414365.86	2002		51275	1 Urbis LED	Teceo 48 LED 700mA	104 Watts	8.00 Metres	Stainless Steel	
Y	26	STREET LIGHTING	IMMINGHAM ROAD	HABROUGH	516321.99	414363.21	2002		51276	1 Urbis LED	Teceo 48 LED 700mA	104 Watts	8.00 Metres	Stainless Steel	
Y	27	STREET LIGHTING	IMMINGHAM ROAD	HABROUGH	516358.58	414359.41	2002		51277	1 Urbis LED	Teceo 48 LED 700mA	104 Watts	8.00 Metres	Stainless Steel	
Y	1	STREET LIGHTING	CRAVENS LANE	HABROUGH	514822.41	413736.23	2020	20/11/2020	68161	Urbis	Axia 16 LED 350mA	19 Watts	6.00 Metres	Galvanised Steel	
Y	2	STREET LIGHTING	CRAVENS LANE	HABROUGH	514806.58	413758.95	1990		46885	Urbis	Axia 16 LED 350mA	19 Watts	5.00 Metres	Galvanised Steel	
Y	3	STREET LIGHTING	CRAVENS LANE	HABROUGH	514787.34	413788.44	1990		46886	Urbis	Axia 16 LED 350mA	19 Watts	5.00 Metres	Galvanised Steel	
Y	4	STREET LIGHTING	CRAVENS LANE	HABROUGH	514769.74	413815.21	1990		46887	Urbis	Axia 16 LED 350mA	19 Watts	5.00 Metres	Galvanised Steel	
Y	5	STREET LIGHTING	CRAVENS LANE	HABROUGH	514753.92	413839.77	1990		46888	Urbis	Axia 16 LED 350mA	19 Watts	5.00 Metres	Galvanised Steel	
Y	6	STREET LIGHTING	CRAVENS LANE	HABROUGH	514736.71	413866.03	1990		46889	Urbis	Axia 16 LED 350mA	19 Watts	5.00 Metres	Galvanised Steel	

Y	7	STREET LIGHTING	CRAVENS LANE	HABROUGH	514723.54	413886.22	1990		46890	Urbis	Axia 16 LED 350mA	19 Watts	5.00 Metres	Galvanised Steel	
Y	8	STREET LIGHTING	CRAVENS LANE	HABROUGH	514713.54	413917.69	1990		46891	Urbis	Axia 16 LED 350mA	19 Watts	5.00 Metres	Galvanised Steel	
Y	9	STREET LIGHTING	CRAVENS LANE	HABROUGH	514691.88	413941.58	2020	20/11/2020	68162	Urbis	Axia 16 LED 350mA	19 Watts	6.00 Metres	Galvanised Steel	
Y	10	STREET LIGHTING	CRAVENS LANE	HABROUGH	514706.2	413973.32	1990		46893	Urbis	Axia 16 LED 350mA	19 Watts	5.00 Metres	Galvanised Steel	
Y	1	STREET LIGHTING	BROCKLESBY AVENUE	IMMINGHAM	516992.21	414290.61	2007		44799	1 Urbis LED	Axia 16 LED 500mA	28 Watts	8.00 Metres	Stainless Steel	
Y	2	STREET LIGHTING	BROCKLESBY AVENUE	IMMINGHAM	517006.67	414302.17	2007		44800	1 Urbis LED	Axia 16 LED 500mA	28 Watts	8.00 Metres	Stainless Steel	
Y	3	STREET LIGHTING	BROCKLESBY AVENUE	IMMINGHAM	517007.01	414326.57	2008		44801	1 Urbis LED	Axia 16 LED 500mA	28 Watts	6.00 Metres	Steel	
Y	4	STREET LIGHTING	BROCKLESBY AVENUE	IMMINGHAM	516994.44	414350.88	2008		44802	1 Urbis LED	Axia 16 LED 500mA	28 Watts	6.00 Metres	Steel	
Y	5	STREET LIGHTING	BROCKLESBY AVENUE	IMMINGHAM	516980.04	414373.83	2008		44803	1 Urbis LED	Axia 16 LED 500mA	28 Watts	6.00 Metres	Steel	
Y	6	STREET LIGHTING	BROCKLESBY AVENUE	IMMINGHAM	516976.28	414404.52	2008		44804	1 Urbis LED	Axia 16 LED 500mA	28 Watts	6.00 Metres	Steel	
Y	7	STREET LIGHTING	BROCKLESBY AVENUE	IMMINGHAM	516964.28	414433.65	2008		44805	1 Urbis LED	Axia 16 LED 500mA	28 Watts	6.00 Metres	Steel	
Y	8	STREET LIGHTING	BROCKLESBY AVENUE	IMMINGHAM	516976.61	414467.55	2011		44806	1 Urbis LED	Axia 16 LED 500mA	28 Watts	6.00 Metres	Steel	
Y	9	STREET LIGHTING	BROCKLESBY AVENUE	IMMINGHAM	516991.25	414495.22	2008		44807	1 Urbis LED	Axia 16 LED 500mA	28 Watts	6.00 Metres	Steel	
Y	10	STREET LIGHTING	BROCKLESBY AVENUE	IMMINGHAM	516998.42	414526	2008		44808	1 Urbis LED	Axia 16 LED 500mA	28 Watts	6.00 Metres	Steel	
Y	11	STREET LIGHTING	BROCKLESBY AVENUE	IMMINGHAM	517000.56	414543.26	2008		44818	1 Urbis LED	Axia 16 LED 500mA	28 Watts	6.00 Metres	Steel	
Y	12	STREET LIGHTING	BROCKLESBY AVENUE	IMMINGHAM	517007.51	414555.67	2008		44819	1 Urbis LED	Axia 16 LED 500mA	28 Watts	6.00 Metres	Steel	
Y	13	STREET LIGHTING	BROCKLESBY AVENUE	IMMINGHAM	516987.17	414565.21	2008		44820	1 Urbis LED	Axia 16 LED 500mA	28 Watts	6.00 Metres	Steel	
Y	14	STREET LIGHTING	BROCKLESBY AVENUE	IMMINGHAM	516968.53	414581.99	2008		44821	1 Urbis LED	Axia 16 LED 500mA	28 Watts	6.00 Metres	Steel	
Y	15	STREET LIGHTING	BROCKLESBY AVENUE	IMMINGHAM	516962.22	414607.84	2013		62947	1 Urbis LED	Axia 16 LED 500mA	28 Watts	6.00 Metres	Galvanised Steel	
Y	16	STREET LIGHTING	BROCKLESBY AVENUE	IMMINGHAM	516955.75	414628.83			66875	1 Urbis LED	Axia 16 LED 500mA	28 Watts	6.00 Metres	Galvanised Steel	
Y	17	STREET LIGHTING	BROCKLESBY AVENUE	IMMINGHAM	516967.92	414656.47			66876	1 Urbis LED	Axia 16 LED 500mA	28 Watts	6.00 Metres	Galvanised Steel	
Y	18	STREET LIGHTING	BROCKLESBY AVENUE	IMMINGHAM	516956.26	414680.13	2015	25/03/2015	66877	Urbis	Axia 16 LED 350mA	19 Watts	6.00 Metres	Galvanised Steel	
Y	19	STREET LIGHTING	BROCKLESBY AVENUE	IMMINGHAM	516974.83	414692.05			66892	1 Urbis LED	Axia 16 LED 500mA	28 Watts	6.00 Metres	Galvanised Steel	
Y	20	STREET LIGHTING	BROCKLESBY AVENUE	IMMINGHAM	516961.36	414706.31	2015	25/03/2015	66878	Urbis	Axia 16 LED 350mA	19 Watts	6.00 Metres	Galvanised Steel	
Y	21	STREET LIGHTING	BROCKLESBY AVENUE	IMMINGHAM	516970.77	414731.61	2015	25/03/2015	66879	Urbis	Axia 16 LED 350mA	19 Watts	6.00 Metres	Galvanised Steel	
Y	22	STREET LIGHTING	BROCKLESBY AVENUE	IMMINGHAM	516982.26	414710.53			66880	1 Urbis LED	Axia 16 LED 500mA	28 Watts	6.00 Metres	Galvanised Steel	
Y	23	STREET LIGHTING	BROCKLESBY AVENUE	IMMINGHAM	517008.01	414703.19			66881	1 Urbis LED	Axia 16 LED 500mA	28 Watts	6.00 Metres	Galvanised Steel	
Y	24	STREET LIGHTING	BROCKLESBY AVENUE	IMMINGHAM	517023.21	414715.88			66882	1 Urbis LED	Axia 16 LED 500mA	28 Watts	6.00 Metres	Galvanised Steel	
Y	25	STREET LIGHTING	BROCKLESBY AVENUE	IMMINGHAM	517056.01	414716.66			66883	1 Urbis LED	Axia 16 LED 500mA	28 Watts	6.00 Metres	Galvanised Steel	
Y	26	STREET LIGHTING	BROCKLESBY AVENUE	IMMINGHAM	517110.01	414716.51	2015	25/03/2015	66929	1 Urbis LED	Axia 16 LED 500mA	28 Watts	6.00 Metres	Galvanised Steel	
Y	27	STREET LIGHTING	BROCKLESBY AVENUE	IMMINGHAM	517129.85	414694.38			66884	1 Urbis LED	Axia 16 LED 500mA	28 Watts	6.00 Metres	Galvanised Steel	
Y	28	STREET LIGHTING	BROCKLESBY AVENUE	IMMINGHAM	517129.68	414669.08			66885	1 Urbis LED	Axia 16 LED 500mA	28 Watts	6.00 Metres	Galvanised Steel	
Y	29	STREET LIGHTING	BROCKLESBY AVENUE	IMMINGHAM	517153.01	414667.69			66893	1 Urbis LED	Axia 16 LED 500mA	28 Watts	6.00 Metres	Galvanised Steel	
Y	30	STREET LIGHTING	BROCKLESBY AVENUE	IMMINGHAM	517138.66	414652.06			66894	1 Urbis LED	Axia 16 LED 500mA	28 Watts	6.00 Metres	Galvanised Steel	
Y	31	STREET LIGHTING	BROCKLESBY AVENUE	IMMINGHAM	517151.19	414651.11			66886	1 Urbis LED	Axia 16 LED 500mA	28 Watts	6.00 Metres	Galvanised Steel	
Y	32	STREET LIGHTING	BROCKLESBY AVENUE	IMMINGHAM	517167.85	414638.76			66887	1 Urbis LED	Axia 16 LED 500mA	28 Watts	6.00 Metres	Galvanised Steel	
Y	33	STREET LIGHTING	BROCKLESBY AVENUE	IMMINGHAM	517159.82	414617.95			66888	1 Urbis LED	Axia 16 LED 500mA	28 Watts	6.00 Metres	Galvanised Steel	
Y	34	STREET LIGHTING	BROCKLESBY AVENUE	IMMINGHAM	517151.11	414599.91			66895	1 Urbis LED	Axia 16 LED 500mA	28 Watts	6.00 Metres	Galvanised Steel	
Y	35	STREET LIGHTING	BROCKLESBY AVENUE	IMMINGHAM	517161.55	414591.87			66889	1 Urbis LED	Axia 16 LED 500mA	28 Watts	6.00 Metres	Galvanised Steel	
Y	36	STREET LIGHTING	BROCKLESBY AVENUE	IMMINGHAM	517147	414577.79	2011		44809	1 Urbis LED	Axia 16 LED 500mA	28 Watts	6.00 Metres	Steel	
Y	37	STREET LIGHTING	BROCKLESBY AVENUE	IMMINGHAM	517120.7	414583.79	2011		44810	1 Urbis LED	Axia 16 LED 500mA	28 Watts	6.00 Metres	Steel	
Y	38	STREET LIGHTING	BROCKLESBY AVENUE	IMMINGHAM	517094.46	414583.42	2009		44811	1 Urbis LED	Axia 16 LED 500mA	28 Watts	6.00 Metres	Steel	
Y	39	STREET LIGHTING	BROCKLESBY AVENUE	IMMINGHAM	517069.32	414585.19	2009		44812	1 Urbis LED	Axia 16 LED 500mA	28 Watts	6.00 Metres	Steel	
Y	40	STREET LIGHTING	BROCKLESBY AVENUE	IMMINGHAM	517070.63	414571.75	2008		44813	1 Urbis LED	Axia 16 LED 500mA	28 Watts	6.00 Metres	Steel	
Y	41	STREET LIGHTING	BROCKLESBY AVENUE	IMMINGHAM	517056.99	414586.35	2009		44814	1 Urbis LED	Axia 16 LED 500mA	28 Watts	6.00 Metres	Steel	
Y	42	STREET LIGHTING	BROCKLESBY AVENUE	IMMINGHAM	517050.49	414571.14	2008		44815	1 Urbis LED	Axia 16 LED 500mA	28 Watts	6.00 Metres	Steel	
Y	43	STREET LIGHTING	BROCKLESBY AVENUE	IMMINGHAM	517054.52	414547.22	2008		44816	1 Urbis LED	Axia 16 LED 500mA	28 Watts	6.00 Metres	Steel	
Y	44	STREET LIGHTING	BROCKLESBY AVENUE	IMMINGHAM	517027.52	414536.2	2008		44817	1 Urbis LED	Axia 16 LED 500mA	28 Watts	6.00 Metres	Steel	
Y	1	STREET LIGHTING	OWMBY CLOSE	IMMINGHAM	516974.27	414554.06	2008		54524	Urbis	Axia 16 LED 350mA	19 Watts	6.00 Metres	Steel	
Y	2	STREET LIGHTING	OWMBY CLOSE	IMMINGHAM	516948.62	414547.65	2008		54525	Urbis	Axia 16 LED 350mA	19 Watts	6.00 Metres	Steel	
Y	3	STREET LIGHTING	OWMBY CLOSE	IMMINGHAM	516930.17	414546.35	2008		54526	Urbis	Axia 16 LED 350mA	19 Watts	6.00 Metres	Steel	
Y	1	STREET LIGHTING	SAXBY CLOSE	IMMINGHAM	517123.2	414565.91	2009		56618	Urbis	Axia 16 LED 350mA	19 Watts	6.00 Metres	Steel	
Y	2	STREET LIGHTING	SAXBY CLOSE	IMMINGHAM	517119.78	414531.55	2011		56619	Urbis	Axia 16 LED 350mA	19 Watts	6.00 Metres	Steel	
Y	3	STREET LIGHTING	SAXBY CLOSE	IMMINGHAM	517123.2	414518.86	2011		56620	Urbis	Axia 16 LED 350mA	19 Watts	6.00 Metres	Steel	
Y	1	STREET LIGHTING	USSELBY CLOSE	IMMINGHAM	517118.84	414729.17	2017		66812	1 Urbis LED	Axia 16 LED 500mA	28 Watts	6.00 Metres	Steel	
Y	2	STREET LIGHTING	USSELBY CLOSE	IMMINGHAM	517140.42	414731.81	2017		66896	1 Urbis LED	Axia 16 LED 500mA	28 Watts	6.00 Metres	Steel	
Y	3	STREET LIGHTING	USSELBY CLOSE	IMMINGHAM	517162.19	414744.86	2017		66813	1 Urbis LED	Axia 16 LED 500mA	28 Watts	6.00 Metres	Steel	
Y	4	STREET LIGHTING	USSELBY CLOSE	IMMINGHAM	517178.37	414736.82	2017		66897	1 Urbis LED	Axia 16 LED 500mA	28 Watts	6.00 Metres	Steel	
Y	1	STREET LIGHTING	WAINWELL CLOSE	IMMINGHAM	517163.51	414667.59	2016		66501	1 Urbis LED	Axia 16 LED 500mA	28 Watts	6.00 Metres	Steel	
Y	2	STREET LIGHTING	WAINWELL CLOSE	IMMINGHAM	517196.21	414666.38	2016		66502	1 Urbis LED	Axia 16 LED 500mA	28 Watts	6.00 Metres	Steel	
Y	3	STREET LIGHTING	WAINWELL CLOSE	IMMINGHAM	517215.15	414666.45	2016		66503	1 Urbis LED	Axia 16 LED 500mA	28 Watts	6.00 Metres	Steel	
Y	1	STREET LIGHTING	TEALBY CLOSE	IMMINGHAM	517181.55	414586.7	2012		58823	1 Urbis LED	Axia 16 LED 500mA	28 Watts	6.00 Metres	Steel	
Y	2	STREET LIGHTING	TEALBY CLOSE	IMMINGHAM	517202.91	414580.25	2013		58824	1 Urbis LED	Axia 16 LED 500mA	28 Watts	6.00 Metres	Galvanised Steel	
Y	3	STREET LIGHTING	TEALBY CLOSE	IMMINGHAM	517228.17	414574.2	2012		58825	1 Urbis LED	Axia 16 LED 500mA	28 Watts	6.00 Metres	Steel	
Y	4	STREET LIGHTING	TEALBY CLOSE	IMMINGHAM	517203.78	414562.24	2012		58826	1 Urbis LED	Axia 16 LED 500mA	28 Watts	6.00 Metres	Steel	
Y	5	STREET LIGHTING	TEALBY CLOSE	IMMINGHAM	517192.67	414532.64	2012		58827	1 Urbis LED	Axia 16 LED 500mA	28 Watts	6.00 Metres	Steel	
Y	6	STREET LIGHTING	TEALBY CLOSE	IMMINGHAM	517197.18	414519.57	2012		58828	1 Urbis LED	Axia 16 LED 500mA	28 Watts	6.00 Metres	Steel	
Y	1	STREET LIGHTING	BEELS ROAD	STALLINGBOROUGH	520825.66	413684.04	2020	28/05/2020	67870	Urbis	Teceo 32 LED 500mA	52 Watts	8.00 Metres	Galvanised Steel	
Y	2	STREET LIGHTING	BEELS ROAD	STALLINGBOROUGH	520793.05	413676.65	1986		43940	1 Urbis LED	Teceo 32 LED 500mA	52 Watts	8.00 Metres	Galvanised Steel	
Y	3	STREET LIGHTING	BEELS ROAD	STALLINGBOROUGH	520772.81	413649.61			67871	Urbis	Teceo 32 LED 500mA	52 Watts	6.00 Metres	Steel	
Y	4	STREET LIGHTING	BEELS ROAD	STALLINGBOROUGH	520738.98	413641.2	1986		43942	1 Urbis LED	Teceo 32 LED 500mA	52 Watts	8.00 Metres	Galvanised Steel	
Y	5	STREET LIGHTING	BEELS ROAD	STALLINGBOROUGH	520724.02	413627.12	1986		43943	1 Urbis LED	Teceo 32 LED 500mA	52 Watts	8.00 Metres	Galvanised Steel	
Y	6	STREET LIGHTING	BEELS ROAD	STALLINGBOROUGH	520714.52	413608.95	2020	28/05/2020	68228	Urbis	Teceo 32 LED 500mA	52 Watts	8.00 Metres	Galvanised Steel	
Y	7	STREET LIGHTING	BEELS ROAD	STALLINGBOROUGH	520714.65	413588.64	1986		43945	1 Urbis LED	Teceo 32 LED 500mA	52 Watts	8.00 Metres	Galvanised Steel	
Y	8	STREET LIGHTING	BEELS ROAD	STALLINGBOROUGH	520722.25	413569.59	1986		43946	1 Urbis LED	Teceo 32 LED 500mA	52 Watts	8.00 Metres	Galvanised Steel	
Y	9	STREET LIGHTING	BEELS ROAD	STALLINGBOROUGH	520738.32	413555.98	1986		43947	1 Urbis LED	Teceo 32 LED 500mA	52 Watts	8.00 Metres	Galvanised Steel	
Y	1	STREET LIGHTING	EUROPA WAY	STALLINGBOROUGH	521110.21	414019.47	2008		48198	1 Urbis LED	Teceo 48 LED 500mA	79 Watts	8.00 Metres	Steel	
Y	2	STREET LIGHTING	EUROPA WAY	STALLINGBOROUGH				27/06/2025	70227	Urbis	Teceo 48 LED 500mA	79 Watts	8.00 Metres	Galvanised Steel	
Y	4	STREET LIGHTING	EUROPA WAY	STALLINGBOROUGH	521057.43	414110.55	2020	15/12/2020	68210	Urbis	Teceo 48 LED 500mA	79 Watts	8.00 Metres	Galvanised Steel	
Y	6	STREET LIGHTING	EUROPA WAY	STALLINGBOROUGH	521026.96	414162.46	2004		48203	1 Urbis LED	Teceo 48 LED 500mA	79 Watts	8.00 Metres	Stainless Steel	
Y	7	STREET LIGHTING	EUROPA WAY	STALLINGBOROUGH	520999.84	414186.94	2008		48204	1 Urbis LED	Teceo 48 LED 500mA	79 Watts	8.00 Metres	Steel	
Y	8	STREET LIGHTING	EUROPA WAY	STALLINGBOROUGH	520993	414220	2002		48205	1 Urbis LED	Teceo 48 LED 500mA	79 Watts	8.00 Metres	Galvanised Steel	
Y	9	STREET LIGHTING	EUROPA WAY	STALLINGBOROUGH	520973.09	414248.97	2019	12/11/2019	67717	Urbis	Teceo 48 LED 500mA	79 Watts	8.00 Metres	Galvanised Steel	
Y	1	STREET LIGHTING	OSBORNE ROAD	STALLINGBOROUGH	520808.85	413743.25	1980		54489	1 Urbis LED	Teceo 40 LED 500mA	64 Watts	8.00 Metres	Galvanised Steel	
Y	2	STREET LIGHTING	OSBORNE ROAD	STALLINGBOROUGH	520818.77	413707.3	1980		54490	1 Urbis LED	Teceo 40 LED 500mA	64 Watts	8.00 Metres	Galvanised Steel	
Y	3	STREET LIGHTING	OSBORNE ROAD	STALLINGBOROUGH	520840.65	413700.21	2020	28/05/2020	67872	Urbis	Teceo 40 LED 500mA	64 Watts	8.00 Metres	Galvanised Steel	
Y	4	STREET LIGHTING	OSBORNE ROAD	STALLINGBOROUGH	520847.86	413677.22	2020	28/05/2020	68229	Urbis	Teceo 40 LED 500mA	64 Watts	8.00 Metres	Galvanised Steel	
Y	5	STREET LIGHTING	OSBORNE ROAD	STALLINGBOROUGH	520886.98	413659.31	1980		54493	1 Urbis LED	Teceo 40 LED 500mA	64 Watts	8.00 Metres	Galvanised Steel	
Y	1	STREET LIGHTING	QUEENS ROAD	IMMINGHAM	519897.48	414914.1	1978		55818	1 Urbis LED	Teceo 48 LED 500mA	79 Watts	10.00 Metres	Galvanised Steel	
Y	2	STREET LIGHTING	QUEENS ROAD	IMMINGHAM	519922.54	414898.09	1978		55819	1 Urbis LED	Teceo 48 LED 500mA	79 Watts	10.00 Metres	Galvanised Steel	
Y	3	STREET LIGHTING	QUEENS ROAD	IMMINGHAM	519942.67	414883.47	1978		55820	1 Urbis LED	Teceo 48 LED 500mA	79 Watts	10.00 Metres	Galvanised Steel	
Y	4	STREET LIGHTING	QUEENS ROAD	IMMINGHAM	519969.5	414864.16	1978		55821	1 Urbis LED	Teceo 48 LED 500mA	79 Watts	10.00 Metres	Galvanised Steel	
Y	5	STREET LIGHTING	QUEENS ROAD	IMMINGHAM	519994.94	414845.62	1978		55822	1 Urbis LED	Teceo 48 LED 500mA	79 Watts	10.00 Metres	Galvanised Steel	
Y	6	STREET LIGHTING	QUEENS ROAD	IMMINGHAM	520024.69	414824.8	1978		55823	1 Urbis LED	Teceo 48 LED 500mA	79 Watts	10.00 Metres	Galvanised Steel	
Y	7	STREET LIGHTING	QUEENS ROAD	IMMINGHAM	520037.6	414797.21	1978		55824	1 Urbis LED	Teceo 48 LED 500mA	79 Watts	10.00 Metres	Galvanised Steel	
Y	8	STREET LIGHTING	QUEENS ROAD	IMMINGHAM	520059.75	414780.56	1978		55825	1 Urbis LED	Teceo 48 LED 500mA	79 Watts	10.00 Metres	Galvanised Steel	
Y	9	STREET LIGHTING	QUEENS ROAD	IMMINGHAM	520083.43	414761.89	1978		55826	1 Urbis LED	Teceo 48 LED 500mA	79 Watts	10.00 Metres	Galvanised Steel	
Y	10	STREET LIGHTING	QUEENS ROAD	IMMINGHAM	520106.72	414745.75	1978		55827	1 Urbis LED	Teceo 48 LED 500mA	79 Watts	10.00 Metres	Galvanised Steel	
Y	11	STREET LIGHTING	QUEENS ROAD	IMMINGHAM	520132.66	414730.63	2005		55828	1 Urbis LED	Teceo 48 LED 500mA	79 Watts	10.00 Metres	Stainless Steel	
Y	12	STREET LIGHTING	QUEENS ROAD	IMMINGHAM	520161.9	414722.21	1978		55829	1 Urbis LED	Teceo 48 LED 500mA	79 Watts	10.00 Metres	Galvanised Steel	
Y	13	STREET LIGHTING	QUEENS ROAD	IMMINGHAM	520192.54	414721.64	1978		55830	1 Urbis LED	Teceo 48 LED 500mA	79 Watts	10.00 Metres	Galvanised Steel	
Y	14	STREET LIGHTING	QUEENS ROAD	IMMINGHAM	520222.28	414728.41	1978		55831	1 Urbis LED	Teceo 48 LED 500mA	79 Watts	10.00 Metres	Galvanised Steel	
Y	15	STREET LIGHTING	QUEENS ROAD	IMMINGHAM	520249.12	414742.27	1978		55832	1 Urbis LED	Teceo 48 LED 500mA	79 Watts	10.00 Metres	Galvanised Steel	
Y	1	STREET LIGHTING	SCANDINAVIAN WAY	STALLINGBOROUGH				27/06/2025	70228	Urbis	Teceo 40 LED 500mA	64 Watts	8.00 Metres	Galvanised Steel	
Y	1	STREET LIGHTING	HOBSON WAY	STALLINGBOROUGH	521742.99	414316.45	1992		50870	1 Urbis LED	Teceo 40 LED 500mA	64 Watts	10.00 Metres	Galvanised Steel	
Y	2	STREET LIGHTING	HOBSON WAY	STALLINGBOROUGH	521761.02	414327.99	1992		50871	1 Urbis LED	Teceo 40 LED 500mA	64 Watts	10.00 Metres	Galvanised Steel	
Y	3	STREET LIGHTING	HOBSON WAY	STALLINGBOROUGH	521767.5	414293.26	1992		50872	1 Urbis LED	Teceo 40 LED 500mA	64 Watts	10.00 Metres	Galvanised Steel	
Y	4	STREET LIGHTING	HOBSON WAY	STALLINGBOROUGH	521796.46	414279.91	2007		50873	1 Urbis LED	Teceo 40 LED 500mA	64 Watts	10.00 Metres	Steel	
Y	5	STREET LIGHTING	HOBSON WAY	STALLINGBOROUGH	521816.51	414254.8	1992		50874	1 Urbis LED	Teceo 40 LED 500mA	64 Watts	10.00 Metres	Galvanised Steel	
Y	6	STREET LIGHTING	HOBSON WAY	STALLINGBOROUGH	521827.93	414222.78	1992		50875	1 Urbis LED	Teceo 40 LED 500mA	64 Watts	10.00 Metres	Galvanised Steel	

Y	7	STREET LIGHTING	HOBSON WAY	STALLINGBOROUGH	521856.69	414205.77	1992		50876	1 Urbis LED	Teceo 40 LED 500mA	64 Watts	10.00 Metres	Galvanised Steel	
Y	8	STREET LIGHTING	HOBSON WAY	STALLINGBOROUGH	521868.06	414172.8	1992		50877	1 Urbis LED	Teceo 40 LED 500mA	64 Watts	10.00 Metres	Galvanised Steel	
Y	9	STREET LIGHTING	HOBSON WAY	STALLINGBOROUGH	521899.54	414147.16	1992		50878	1 Urbis LED	Teceo 40 LED 500mA	64 Watts	10.00 Metres	Galvanised Steel	
Y	10	STREET LIGHTING	HOBSON WAY	STALLINGBOROUGH	521904.8	414123.67	1992		50879	1 Urbis LED	Teceo 40 LED 500mA	64 Watts	10.00 Metres	Galvanised Steel	
Y	11	STREET LIGHTING	HOBSON WAY	STALLINGBOROUGH	521932.35	414101.96	1992		50880	1 Urbis LED	Teceo 40 LED 500mA	64 Watts	10.00 Metres	Galvanised Steel	
Y	12	STREET LIGHTING	HOBSON WAY	STALLINGBOROUGH	521941.87	414070.57	1992		50881	1 Urbis LED	Teceo 40 LED 500mA	64 Watts	10.00 Metres	Galvanised Steel	
Y	13	STREET LIGHTING	HOBSON WAY	STALLINGBOROUGH	521968.19	414049.81	1992		50882	1 Urbis LED	Teceo 40 LED 500mA	64 Watts	10.00 Metres	Galvanised Steel	
Y	14	STREET LIGHTING	HOBSON WAY	STALLINGBOROUGH	521978.36	414016.9	1992		50883	1 Urbis LED	Teceo 40 LED 500mA	64 Watts	10.00 Metres	Galvanised Steel	
Y	15	STREET LIGHTING	HOBSON WAY	STALLINGBOROUGH	522006.2	413995.46	1992		50884	1 Urbis LED	Teceo 40 LED 500mA	64 Watts	10.00 Metres	Galvanised Steel	
Y	16	STREET LIGHTING	HOBSON WAY	STALLINGBOROUGH	522015.51	413963.26	1992		50885	1 Urbis LED	Teceo 40 LED 500mA	64 Watts	10.00 Metres	Galvanised Steel	
Y	17	STREET LIGHTING	HOBSON WAY	STALLINGBOROUGH	522043.06	413942.19	1992		50886	1 Urbis LED	Teceo 40 LED 500mA	64 Watts	10.00 Metres	Galvanised Steel	
Y	18	STREET LIGHTING	HOBSON WAY	STALLINGBOROUGH	522053.39	413908.57	1992		50887	1 Urbis LED	Teceo 40 LED 500mA	64 Watts	10.00 Metres	Galvanised Steel	
Y	19	STREET LIGHTING	HOBSON WAY	STALLINGBOROUGH	522079.72	413889.25	1992		50888	1 Urbis LED	Teceo 40 LED 500mA	64 Watts	10.00 Metres	Galvanised Steel	
Y	20	STREET LIGHTING	HOBSON WAY	STALLINGBOROUGH	522087.21	413859.68	1992		50889	1 Urbis LED	Teceo 40 LED 500mA	64 Watts	10.00 Metres	Galvanised Steel	
Y	21	STREET LIGHTING	HOBSON WAY	STALLINGBOROUGH	522111.72	413841.48	1992		50890	1 Urbis LED	Teceo 40 LED 500mA	64 Watts	10.00 Metres	Galvanised Steel	
Y	22	STREET LIGHTING	HOBSON WAY	STALLINGBOROUGH	522115.36	413819	1992		50891	1 Urbis LED	Teceo 40 LED 500mA	64 Watts	10.00 Metres	Galvanised Steel	
Y	23	STREET LIGHTING	HOBSON WAY	STALLINGBOROUGH	522147.57	413791.15	1992		50892	1 Urbis LED	Teceo 40 LED 500mA	64 Watts	10.00 Metres	Galvanised Steel	
Y	24	STREET LIGHTING	HOBSON WAY	STALLINGBOROUGH	522153.64	413763.97	1992		50893	1 Urbis LED	Teceo 40 LED 500mA	64 Watts	10.00 Metres	Galvanised Steel	
Y	25	STREET LIGHTING	HOBSON WAY	STALLINGBOROUGH	522172.28	413753.75	1992		50894	1 Urbis LED	Teceo 40 LED 500mA	64 Watts	10.00 Metres	Galvanised Steel	
Y	26	STREET LIGHTING	HOBSON WAY	STALLINGBOROUGH	522188.28	413714.45	1992		50895	1 Urbis LED	Teceo 40 LED 500mA	64 Watts	10.00 Metres	Galvanised Steel	
Y	27	STREET LIGHTING	HOBSON WAY	STALLINGBOROUGH	522217.89	413689.93	1992		50896	1 Urbis LED	Teceo 40 LED 500mA	64 Watts	10.00 Metres	Galvanised Steel	
Y	28	STREET LIGHTING	HOBSON WAY	STALLINGBOROUGH	522227.89	413656.37	1992		50897	1 Urbis LED	Teceo 40 LED 500mA	64 Watts	10.00 Metres	Galvanised Steel	
Y	29	STREET LIGHTING	HOBSON WAY	STALLINGBOROUGH	522254.12	413635.69	1992		50898	1 Urbis LED	Teceo 40 LED 500mA	64 Watts	10.00 Metres	Galvanised Steel	
Y	30	STREET LIGHTING	HOBSON WAY	STALLINGBOROUGH	522265.26	413604.13	1992		50899	1 Urbis LED	Teceo 40 LED 500mA	64 Watts	10.00 Metres	Galvanised Steel	
Y	31	STREET LIGHTING	HOBSON WAY	STALLINGBOROUGH	522286.16	413577.69	1992		50900	1 Urbis LED	Teceo 40 LED 500mA	64 Watts	10.00 Metres	Galvanised Steel	
Y	32	STREET LIGHTING	HOBSON WAY	STALLINGBOROUGH	522316.62	413558.83	1992		50901	1 Urbis LED	Teceo 40 LED 500mA	64 Watts	10.00 Metres	Galvanised Steel	
Y	33	STREET LIGHTING	HOBSON WAY	STALLINGBOROUGH	522329.79	413529.46	1992		50902	1 Urbis LED	Teceo 40 LED 500mA	64 Watts	10.00 Metres	Galvanised Steel	
Y	34	STREET LIGHTING	HOBSON WAY	STALLINGBOROUGH	522361.22	413515.37	1992		50903	1 Urbis LED	Teceo 40 LED 500mA	64 Watts	10.00 Metres	Galvanised Steel	
Y	35	STREET LIGHTING	HOBSON WAY	STALLINGBOROUGH	522374.59	413486.61	1992		50904	1 Urbis LED	Teceo 40 LED 500mA	64 Watts	10.00 Metres	Galvanised Steel	
Y	36	STREET LIGHTING	HOBSON WAY	STALLINGBOROUGH	522397.76	413467.9	1992		50905	1 Urbis LED	Teceo 40 LED 500mA	64 Watts	10.00 Metres	Galvanised Steel	
Y	37	STREET LIGHTING	HOBSON WAY	STALLINGBOROUGH	522419.76	413468	1992		50906	1 Urbis LED	Teceo 40 LED 500mA	64 Watts	10.00 Metres	Galvanised Steel	
Y	38	STREET LIGHTING	HOBSON WAY	STALLINGBOROUGH	522431.84	413443.35	1992		50907	1 Urbis LED	Teceo 40 LED 500mA	64 Watts	10.00 Metres	Galvanised Steel	
Y	39	STREET LIGHTING	HOBSON WAY	STALLINGBOROUGH	522455.14	413427.5	1992		50908	1 Urbis LED	Teceo 40 LED 500mA	64 Watts	10.00 Metres	Galvanised Steel	
Y	40	STREET LIGHTING	HOBSON WAY	STALLINGBOROUGH	522479.31	413427	1992		50909	1 Urbis LED	Teceo 40 LED 500mA	64 Watts	10.00 Metres	Galvanised Steel	
Y	41	STREET LIGHTING	HOBSON WAY	STALLINGBOROUGH	522492.48	413401.11	1992		50910	1 Urbis LED	Teceo 40 LED 500mA	64 Watts	10.00 Metres	Galvanised Steel	
Y	42	STREET LIGHTING	HOBSON WAY	STALLINGBOROUGH	522526.15	413392.19	1992		50911	1 Urbis LED	Teceo 40 LED 500mA	64 Watts	10.00 Metres	Galvanised Steel	
Y	43	STREET LIGHTING	HOBSON WAY	STALLINGBOROUGH	522541.51	413362.94	1992		50912	1 Urbis LED	Teceo 40 LED 500mA	64 Watts	6.00 Metres	Galvanised Steel	
Y	44	STREET LIGHTING	HOBSON WAY	STALLINGBOROUGH	522565.31	413340.98	1992		50913	1 Urbis LED	Teceo 24 LED 500mA	40 Watts	6.00 Metres	Galvanised Steel	
Y	45	STREET LIGHTING	HOBSON WAY	STALLINGBOROUGH	522572.9	413349.2	1992		50914	1 Urbis LED	Teceo 24 LED 500mA	40 Watts	6.00 Metres	Galvanised Steel	
Y	46	STREET LIGHTING	HOBSON WAY	STALLINGBOROUGH	522589.49	413317.43	1992		50915	1 Urbis LED	Teceo 24 LED 500mA	40 Watts	6.00 Metres	Galvanised Steel	
Y	47	STREET LIGHTING	HOBSON WAY	STALLINGBOROUGH	522595.82	413325.66	1992		50916	1 Urbis LED	Teceo 40 LED 500mA	64 Watts	10.00 Metres	Galvanised Steel	
Y	48	STREET LIGHTING	HOBSON WAY	STALLINGBOROUGH	522618.09	413299.78	1992		50917	1 Urbis LED	Teceo 40 LED 500mA	64 Watts	10.00 Metres	Galvanised Steel	
Y	49	STREET LIGHTING	HOBSON WAY	STALLINGBOROUGH	522625.33	413274.83	1992		50918	1 Urbis LED	Teceo 40 LED 500mA	64 Watts	10.00 Metres	Galvanised Steel	
Y	50	STREET LIGHTING	HOBSON WAY	STALLINGBOROUGH	522651.37	413257.32	1992		50919	1 Urbis LED	Teceo 40 LED 500mA	64 Watts	10.00 Metres	Galvanised Steel	
Y	51	STREET LIGHTING	HOBSON WAY	STALLINGBOROUGH	522660.28	413223.9	1992		50920	1 Urbis LED	Teceo 40 LED 500mA	64 Watts	10.00 Metres	Galvanised Steel	
Y	52	STREET LIGHTING	HOBSON WAY	STALLINGBOROUGH	522685.21	413203.86	1992		50921	1 Urbis LED	Teceo 40 LED 500mA	64 Watts	10.00 Metres	Galvanised Steel	
Y	53	STREET LIGHTING	HOBSON WAY	STALLINGBOROUGH	522693.45	413170.48	1992		50922	1 Urbis LED	Teceo 40 LED 500mA	64 Watts	10.00 Metres	Galvanised Steel	
Y	54	STREET LIGHTING	HOBSON WAY	STALLINGBOROUGH	522718.26	413150	1992		50923	1 Urbis LED	Teceo 40 LED 500mA	64 Watts	10.00 Metres	Galvanised Steel	
Y	55	STREET LIGHTING	HOBSON WAY	STALLINGBOROUGH	522726.38	413116.31	1992		50924	1 Urbis LED	Teceo 40 LED 500mA	64 Watts	10.00 Metres	Galvanised Steel	
Y	56	STREET LIGHTING	HOBSON WAY	STALLINGBOROUGH	522751.34	413095.57	1992		50925	1 Urbis LED	Teceo 40 LED 500mA	64 Watts	10.00 Metres	Galvanised Steel	
Y	57	STREET LIGHTING	HOBSON WAY	STALLINGBOROUGH	522757.47	413066.47	1992		50926	1 Urbis LED	Teceo 40 LED 500mA	64 Watts	10.00 Metres	Galvanised Steel	
Y	58	STREET LIGHTING	HOBSON WAY	STALLINGBOROUGH	522773.93	413039.43	1992		50927	1 Urbis LED	Teceo 40 LED 500mA	64 Watts	10.00 Metres	Galvanised Steel	
Y	59	STREET LIGHTING	HOBSON WAY	STALLINGBOROUGH	522790.74	413011.2	1992		50928	1 Urbis LED	Teceo 40 LED 500mA	64 Watts	10.00 Metres	Galvanised Steel	
Y	60	STREET LIGHTING	HOBSON WAY	STALLINGBOROUGH	522817.1	412989.12	1992		50929	1 Urbis LED	Teceo 40 LED 500mA	64 Watts	10.00 Metres	Galvanised Steel	
Y	61	STREET LIGHTING	HOBSON WAY	STALLINGBOROUGH	522835.13	412960.97	1992		50930	1 Urbis LED	Teceo 40 LED 500mA	64 Watts	10.00 Metres	Galvanised Steel	
Y	62	STREET LIGHTING	HOBSON WAY	STALLINGBOROUGH	522843.63	412924.41	1992		50931	1 Urbis LED	Teceo 40 LED 500mA	64 Watts	10.00 Metres	Galvanised Steel	
Y	63	STREET LIGHTING	HOBSON WAY	STALLINGBOROUGH	522853.46	412904.15	1992		50932	1 Urbis LED	Teceo 40 LED 500mA	64 Watts	10.00 Metres	Galvanised Steel	
Y	64	STREET LIGHTING	HOBSON WAY	STALLINGBOROUGH	522867.38	412912.5	1992		50933	1 Urbis LED	Teceo 40 LED 500mA	64 Watts	10.00 Metres	Galvanised Steel	
Y	1	STREET LIGHTING	LAPORTE ROAD	STALLINGBOROUGH	521715.94	414400.87	1992		52316	1 Urbis LED	Teceo 48 LED 700mA	104 Watts	10.00 Metres	Galvanised Steel	
Y	2	STREET LIGHTING	LAPORTE ROAD	STALLINGBOROUGH	521698.09	414391.44	1992		52317	1 Urbis LED	Teceo 48 LED 700mA	104 Watts	10.00 Metres	Galvanised Steel	
Y	3	STREET LIGHTING	LAPORTE ROAD	STALLINGBOROUGH	521685.32	414415.38	1992		52318	1 Urbis LED	Teceo 48 LED 700mA	104 Watts	10.00 Metres	Galvanised Steel	
Y	4	STREET LIGHTING	LAPORTE ROAD	STALLINGBOROUGH	521682.55	414453.96	1992		52319	1 Urbis LED	Teceo 48 LED 700mA	104 Watts	10.00 Metres	Galvanised Steel	
Y	5	STREET LIGHTING	LAPORTE ROAD	STALLINGBOROUGH	521656.96	414468.65	1992		52320	1 Urbis LED	Teceo 48 LED 700mA	104 Watts	10.00 Metres	Galvanised Steel	
Y	6	STREET LIGHTING	LAPORTE ROAD	STALLINGBOROUGH	521649.17	414506.8	1992		52321	1 Urbis LED	Teceo 48 LED 700mA	104 Watts	10.00 Metres	Galvanised Steel	
Y	7	STREET LIGHTING	LAPORTE ROAD	STALLINGBOROUGH	521618.28	414525.53	1992		52322	1 Urbis LED	Teceo 48 LED 700mA	104 Watts	10.00 Metres	Galvanised Steel	
Y	8	STREET LIGHTING	LAPORTE ROAD	STALLINGBOROUGH	521599.8	414551.83	1992		52323	1 Urbis LED	Teceo 48 LED 700mA	104 Watts	10.00 Metres	Galvanised Steel	
Y	9	STREET LIGHTING	LAPORTE ROAD	STALLINGBOROUGH	521594.74	414583.73	2021	06/09/2021	68431	Urbis	Teceo 48 LED 700mA	104 Watts	12.00 Metres	Galvanised Steel	
Y	10	STREET LIGHTING	LAPORTE ROAD	STALLINGBOROUGH	521563.85	414601.14	1992		52325	1 Urbis LED	Teceo 48 LED 700mA	104 Watts	10.00 Metres	Galvanised Steel	
Y	11	STREET LIGHTING	LAPORTE ROAD	STALLINGBOROUGH	521544.48	414629.24	1992		52326	1 Urbis LED	Teceo 48 LED 700mA	104 Watts	10.00 Metres	Galvanised Steel	
Y	12	STREET LIGHTING	LAPORTE ROAD	STALLINGBOROUGH	521537.9	414663.29	1992		52327	1 Urbis LED	Teceo 48 LED 700mA	104 Watts	10.00 Metres	Galvanised Steel	
Y	13	STREET LIGHTING	LAPORTE ROAD	STALLINGBOROUGH	521510.05	414680.25	1992		52328	1 Urbis LED	Teceo 48 LED 700mA	104 Watts	10.00 Metres	Galvanised Steel	
Y	14	STREET LIGHTING	LAPORTE ROAD	STALLINGBOROUGH	521502.1	414713.38	1992		52329	1 Urbis LED	Teceo 48 LED 700mA	104 Watts	10.00 Metres	Galvanised Steel	
Y	15	STREET LIGHTING	LAPORTE ROAD	STALLINGBOROUGH	521475.32	414733.97	1992		52330	1 Urbis LED	Teceo 48 LED 700mA	104 Watts	10.00 Metres	Galvanised Steel	
Y	16	STREET LIGHTING	LAPORTE ROAD	STALLINGBOROUGH	521458.41	414757.73	1992		52331	1 Urbis LED	Teceo 48 LED 700mA	104 Watts	10.00 Metres	Galvanised Steel	
Y	1	STREET LIGHTING	NORTH MOSS LANE	STALLINGBOROUGH	520594.1	413596.54	1980		61819	1 Urbis LED	Teceo 48 LED 700mA	104 Watts	10.00 Metres	Galvanised Steel	
Y	1	STREET LIGHTING	NORTH MOSS LANE	STALLINGBOROUGH	520594.1	413596.54	1980		62351	1 Urbis LED	Teceo 48 LED 700mA	104 Watts	10.00 Metres	Galvanised Steel	
Y	2	STREET LIGHTING	NORTH MOSS LANE	STALLINGBOROUGH	520612.07	413560.28	1980		54215	1 Urbis LED	Teceo 48 LED 500mA	79 Watts	10.00 Metres	Galvanised Steel	
Y	3	STREET LIGHTING	NORTH MOSS LANE	STALLINGBOROUGH	520638.28	413533.5	1980		54216	1 Urbis LED	Teceo 48 LED 500mA	79 Watts	10.00 Metres	Galvanised Steel	
Y	1	STREET LIGHTING	SOUTH MARSH ROAD	STALLINGBOROUGH	520734.55	411993.01	1989		57344	1 Urbis LED	Teceo 48 LED 700mA	104 Watts	10.00 Metres	Galvanised Steel	
Y	2	STREET LIGHTING	SOUTH MARSH ROAD	STALLINGBOROUGH	520743.03	412029.97	1989		57345	1 Urbis LED	Teceo 48 LED 700mA	104 Watts	10.00 Metres	Galvanised Steel	
Y	3	STREET LIGHTING	SOUTH MARSH ROAD	STALLINGBOROUGH	520760.88	412063.89	1989		57346	1 Urbis LED	Teceo 48 LED 700mA	104 Watts	10.00 Metres	Galvanised Steel	
Y	4	STREET LIGHTING	SOUTH MARSH ROAD	STALLINGBOROUGH	520781.89	412093.77	1980		57347	1 Urbis LED	Teceo 48 LED 700mA	104 Watts	10.00 Metres	Galvanised Steel	
Y	5	STREET LIGHTING	SOUTH MARSH ROAD	STALLINGBOROUGH			2024	30/10/2024	70031	Urbis	AXIA 3.3 48 LED 540mA	78 Watts	12.00 Metres	Galvanised Steel	
Y	6	STREET LIGHTING	SOUTH MARSH ROAD	STALLINGBOROUGH	520835.56	412143.45	2000		57349	1 Urbis LED	Teceo 48 LED 700mA	104 Watts	10.00 Metres	Galvanised Steel	
Y	7	STREET LIGHTING	SOUTH MARSH ROAD	STALLINGBOROUGH	520855.69	412174.47	2000		57350	1 Urbis LED	Teceo 48 LED 700mA	104 Watts	10.00 Metres	Galvanised Steel	
Y	8	STREET LIGHTING	SOUTH MARSH ROAD	STALLINGBOROUGH	520875.43	412204.85	2000		57351	1 Urbis LED	Teceo 48 LED 700mA	104 Watts	10.00 Metres	Galvanised Steel	
Y	1	STREET LIGHTING	KILN LANE	STALLINGBOROUGH	520598.88	413639.56	2021	06/09/2021	61667	Urbis	Teceo 48 LED 700mA	104 Watts	12.00 Metres	Galvanised Steel	
Y	1	STREET LIGHTING	KILN LANE	STALLINGBOROUGH	520598.88	413639.56	2021		62199	1 Urbis LED	Teceo 48 LED 700mA	104 Watts	12.00 Metres	Galvanised Steel	
Y	2	STREET LIGHTING	KILN LANE	STALLINGBOROUGH	520629.01	413651.78	1984		51603	1 Urbis LED	Teceo 48 LED 700mA	104 Watts	10.00 Metres	Galvanised Steel	
Y	3	STREET LIGHTING	KILN LANE	STALLINGBOROUGH	520648.12	413677.28	1984		51604	Urbis	AXIA 3.3 48 LED 540mA	78 Watts	10.00 Metres	Galvanised Steel	
Y	4	STREET LIGHTING	KILN LANE	STALLINGBOROUGH	520681.21	413681.55	1984		51605	1 Urbis LED	Teceo 48 LED 700mA	104 Watts	10.00 Metres	Galvanised Steel	
Y	5	STREET LIGHTING	KILN LANE	STALLINGBOROUGH	520698.8	413707.81	1984		51606	Urbis	AXIA 3.3 48 LED 540mA	78 Watts	10.00 Metres	Galvanised Steel	
Y	6	STREET LIGHTING	KILN LANE	STALLINGBOROUGH	520732.57	413712.55	1984		51607	1 Urbis LED	Teceo 48 LED 700mA	104 Watts	10.00 Metres	Galvanised Steel	
Y	7	STREET LIGHTING	KILN LANE	STALLINGBOROUGH	520749.74	413739.96	1984		51608	1 Urbis LED	Teceo 48 LED 700mA	104 Watts	10.00 Metres	Galvanised Steel	
Y	8	STREET LIGHTING	KILN LANE	STALLINGBOROUGH	520781.13	413741.67	1984		51609	1 Urbis LED	Teceo 48 LED 700mA	104 Watts	10.00 Metres	Galvanised Steel	
Y	9	STREET LIGHTING	KILN LANE	STALLINGBOROUGH	520788.47	413764.08	1984		51610	Urbis	AXIA 3.3 48 LED 540mA	78 Watts	10.00 Metres	Galvanised Steel	
Y	10	STREET LIGHTING	KILN LANE	STALLINGBOROUGH	520815.81	413764.71	1984		51611	1 Urbis LED	Teceo 48 LED 700mA	104 Watts	10.00 Metres	Galvanised Steel	
Y	11	STREET LIGHTING	KILN LANE	STALLINGBOROUGH	520838.09	413798.51	1984		51612	Urbis	AXIA 3.3 48 LED 540mA	78 Watts	10.00 Metres	Galvanised Steel	
Y	12	STREET LIGHTING	KILN LANE	STALLINGBOROUGH	520858.5	413813.12	1995		51613	Urbis	AXIA 3.3 48 LED 540mA	78 Watts	10.00 Metres	Galvanised Steel	
Y	13	STREET LIGHTING	KILN LANE	STALLINGBOROUGH	520890.7	413820.81	1995		51614	1 Urbis LED	Teceo 48 LED 700mA	104 Watts	10.00 Metres	Galvanised Steel	
Y	14	STREET LIGHTING	KILN LANE	STALLINGBOROUGH	520914.6	413837.81	1995		51615	1 Urbis LED	Teceo 48 LED 700mA	104 Watts	10.00 Metres	Galvanised Steel	
Y	15	STREET LIGHTING	KILN LANE	STALLINGBOROUGH	520928.37	413865.25	1995		51616	1 Urbis LED	Teceo 48 LED 700mA	104 Watts	10.00 Metres	Galvanised Steel	
Y	16	STREET LIGHTING	KILN LANE	STALLINGBOROUGH	520946.8	413882.26	1995		51617	1 Urbis LED	Teceo 48 LED 700mA	104 Watts	10.00 Metres	Galvanised Steel	
Y	17	STREET LIGHTING	KILN LANE	STALLINGBOROUGH	520981.03	413882.16	1995		51618	1 Urbis LED	Teceo 48 LED 700mA	104 Watts	10.00 Metres	Galvanised Steel	
Y	18	STREET LIGHTING	KILN LANE	STALLINGBOROUGH	520995.82	413914.65	1995		51619	1 Urbis LED	Teceo 48 LED 700mA	104 Watts	10.00 Metres	Galvanised Steel	
Y	19	STREET LIGHTING	KILN LANE	STALLINGBOROUGH	521021.82	413932.62	1995		51620	1 Urbis LED	Teceo 48 LED 700mA	104 Watts	10.00 Metres	Galvanised Steel	
Y	20	STREET LIGHTING	KILN LANE	STALLINGBOROUGH	521055.73	413938.17	1995		51621	1 Urbis LED	Teceo 48 LED 700mA	104 Watts	10.00 Metres	Galvanised Steel	
Y	21	STREET LIGHTING	KILN LANE	STALLINGBOROUGH	521084.08	413957.71	1995		51622	1 Urbis LED	Teceo 48 LED 700mA	104 Watts	10.00 Metres	Galvanised Steel	
Y	22	STREET LIGHTING	KILN LANE	STALLINGBOROUGH				14/01/2025	70025				12.00 Metres	Galvanised Steel	
Y	23	STREET LIGHTING	KILN LANE	STALLINGBOROUGH				14/01/2025	70174				12.00 Metres	Galvanised Steel	

Y	24	STREET LIGHTING	KILN LANE	STALLINGBOROUGH	521161.73	414011.97	1995		51625	1 Urbis LED	Teceo 48 LED 700mA	104 Watts	10.00 Metres	Galvanised Steel	
Y	25	STREET LIGHTING	KILN LANE	STALLINGBOROUGH	521177.73	414042.86	1995		51626	1 Urbis LED	Teceo 48 LED 700mA	104 Watts	10.00 Metres	Galvanised Steel	
Y	26	STREET LIGHTING	KILN LANE	STALLINGBOROUGH	521199.19	414059.97	2009		51627	1 Urbis LED	Teceo 48 LED 700mA	104 Watts	10.00 Metres	Steel	
Y	27	STREET LIGHTING	KILN LANE	STALLINGBOROUGH	521230.79	414067.26	1995		51628	1 Urbis LED	Teceo 48 LED 700mA	104 Watts	10.00 Metres	Galvanised Steel	
Y	28	STREET LIGHTING	KILN LANE	STALLINGBOROUGH	521250.44	414090.05	1995		51629	1 Urbis LED	Teceo 48 LED 700mA	104 Watts	10.00 Metres	Galvanised Steel	
Y	29	STREET LIGHTING	KILN LANE	STALLINGBOROUGH	521266.84	414112.22	1995		51630	1 Urbis LED	Teceo 48 LED 700mA	104 Watts	10.00 Metres	Galvanised Steel	
Y	30	STREET LIGHTING	KILN LANE	STALLINGBOROUGH	521279.2	414145.14	1995		51631	1 Urbis LED	Teceo 48 LED 700mA	104 Watts	10.00 Metres	Galvanised Steel	
Y	31	STREET LIGHTING	KILN LANE	STALLINGBOROUGH	521298.84	414166.2	1995		51632	1 Urbis LED	Teceo 48 LED 700mA	104 Watts	10.00 Metres	Galvanised Steel	
Y	32	STREET LIGHTING	KILN LANE	STALLINGBOROUGH	521330.08	414179.41	1992		51633	1 Urbis LED	Teceo 48 LED 700mA	104 Watts	10.00 Metres	Galvanised Steel	
Y	33	STREET LIGHTING	KILN LANE	STALLINGBOROUGH	521352.42	414206.79	1992		51634	1 Urbis LED	Teceo 48 LED 700mA	104 Watts	10.00 Metres	Galvanised Steel	
Y	34	STREET LIGHTING	KILN LANE	STALLINGBOROUGH	521386.12	414216.73	1992		51635	1 Urbis LED	Teceo 48 LED 700mA	104 Watts	10.00 Metres	Galvanised Steel	
Y	35	STREET LIGHTING	KILN LANE	STALLINGBOROUGH	521410.24	414241.46	1992		51636	1 Urbis LED	Teceo 48 LED 700mA	104 Watts	10.00 Metres	Galvanised Steel	
Y	36	STREET LIGHTING	KILN LANE	STALLINGBOROUGH	521444.3	414247.02	1992		51637	1 Urbis LED	Teceo 48 LED 700mA	104 Watts	10.00 Metres	Galvanised Steel	
Y	37	STREET LIGHTING	KILN LANE	STALLINGBOROUGH	521470.81	414270.4	1992		51638	1 Urbis LED	Teceo 48 LED 700mA	104 Watts	10.00 Metres	Galvanised Steel	
Y	38	STREET LIGHTING	KILN LANE	STALLINGBOROUGH			2024	03/10/2024	69994				12.00 Metres	Galvanised Steel	
Y	39	STREET LIGHTING	KILN LANE	STALLINGBOROUGH	521532.86	414292.59	1992		51640	1 Urbis LED	Teceo 48 LED 700mA	104 Watts	10.00 Metres	Galvanised Steel	
Y	40	STREET LIGHTING	KILN LANE	STALLINGBOROUGH	521567.84	414292.86	2004		51641	1 Urbis LED	Teceo 48 LED 700mA	104 Watts	10.00 Metres	Stainless Steel	
Y	41	STREET LIGHTING	KILN LANE	STALLINGBOROUGH	521594.54	414313.3	1992		51642	1 Urbis LED	Teceo 48 LED 700mA	104 Watts	10.00 Metres	Galvanised Steel	
Y	42	STREET LIGHTING	KILN LANE	STALLINGBOROUGH	521631.73	414313.45	1992		51643	1 Urbis LED	Teceo 48 LED 700mA	104 Watts	10.00 Metres	Galvanised Steel	
Y	43	STREET LIGHTING	KILN LANE	STALLINGBOROUGH	521658.6	414338.09	1992		51644	1 Urbis LED	Teceo 48 LED 700mA	104 Watts	10.00 Metres	Galvanised Steel	
Y	44	STREET LIGHTING	KILN LANE	STALLINGBOROUGH	521662.21	414321.45	1992		51645	1 Urbis LED	Teceo 48 LED 700mA	104 Watts	10.00 Metres	Galvanised Steel	
Y	45	STREET LIGHTING	KILN LANE	STALLINGBOROUGH	521692.22	414353.78	1992		51646	1 Urbis LED	Teceo 48 LED 700mA	104 Watts	10.00 Metres	Galvanised Steel	
Y	46	STREET LIGHTING	KILN LANE	STALLINGBOROUGH	521698.74	414330.3	1992		51647	1 Urbis LED	Teceo 48 LED 700mA	104 Watts	10.00 Metres	Galvanised Steel	
Y	1	STREET LIGHTING	A1173 FROM KINGS ROAD	IMMINGHAM					69377						
Y	1	STREET LIGHTING	A1173 FROM KINGS ROAD	IMMINGHAM	520113.07	413510.56			69378						
Y	2	STREET LIGHTING	A1173 FROM KINGS ROAD	IMMINGHAM	520102.2	413527.38			69379						
Y	3	STREET LIGHTING	A1173 FROM KINGS ROAD	IMMINGHAM	520085.4	413551.05			69380						
Y	4	STREET LIGHTING	A1173 FROM KINGS ROAD	IMMINGHAM	520061.36	413583.72			69381						
Y	5	STREET LIGHTING	A1173 FROM KINGS ROAD	IMMINGHAM	520038.41	413605.92			69382						
Y	6	STREET LIGHTING	A1173 FROM KINGS ROAD	IMMINGHAM	520004.94	413652.5			69383						
Y	7	STREET LIGHTING	A1173 FROM KINGS ROAD	IMMINGHAM					69384						
Y	8	STREET LIGHTING	A1173 FROM KINGS ROAD	IMMINGHAM					69385						
Y	9	STREET LIGHTING	A1173 FROM KINGS ROAD	IMMINGHAM					69386						
Y	10	STREET LIGHTING	A1173 FROM KINGS ROAD	IMMINGHAM					69387						
Y	11	STREET LIGHTING	A1173 FROM KINGS ROAD	IMMINGHAM					69388						
Y	12	STREET LIGHTING	A1173 FROM KINGS ROAD	IMMINGHAM					69389						
Y	13	STREET LIGHTING	A1173 FROM KINGS ROAD	IMMINGHAM					69390						
Y	14	STREET LIGHTING	A1173 FROM KINGS ROAD	IMMINGHAM					69391						
Y	15	STREET LIGHTING	A1173 FROM KINGS ROAD	IMMINGHAM					69392						
Y	16	STREET LIGHTING	A1173 FROM KINGS ROAD	IMMINGHAM					69393						
Y	17	STREET LIGHTING	A1173 FROM KINGS ROAD	IMMINGHAM					69394						
Y	18	STREET LIGHTING	A1173 FROM KINGS ROAD	IMMINGHAM					69395						
Y	19	STREET LIGHTING	A1173 FROM KINGS ROAD	IMMINGHAM					69396						
Y	20	STREET LIGHTING	A1173 FROM KINGS ROAD	IMMINGHAM					69397						
Y	21	STREET LIGHTING	A1173 FROM KINGS ROAD	IMMINGHAM					69398						
Y	22	STREET LIGHTING	A1173 FROM KINGS ROAD	IMMINGHAM					69399						
Y	23	STREET LIGHTING	A1173 FROM KINGS ROAD	IMMINGHAM					69400						
Y	24	STREET LIGHTING	A1173 FROM KINGS ROAD	IMMINGHAM					69401						
Y	25	STREET LIGHTING	A1173 FROM KINGS ROAD	IMMINGHAM					69402						
Y	26	STREET LIGHTING	A1173 FROM KINGS ROAD	IMMINGHAM					69403						
Y	27	STREET LIGHTING	A1173 FROM KINGS ROAD	IMMINGHAM					69404						
Y	28	STREET LIGHTING	A1173 FROM KINGS ROAD	IMMINGHAM					69405						
Y	29	STREET LIGHTING	A1173 FROM KINGS ROAD	IMMINGHAM					69406						
Y	30	STREET LIGHTING	A1173 FROM KINGS ROAD	IMMINGHAM					69407						
Y	31	STREET LIGHTING	A1173 FROM KINGS ROAD	IMMINGHAM					69408						
Y	32	STREET LIGHTING	A1173 FROM KINGS ROAD	IMMINGHAM					69409						
Y	33	STREET LIGHTING	A1173 FROM KINGS ROAD	IMMINGHAM					69410						
Y	34	STREET LIGHTING	A1173 FROM KINGS ROAD	IMMINGHAM					69411						
Y	35	STREET LIGHTING	A1173 FROM KINGS ROAD	IMMINGHAM					69412						
Y	36	STREET LIGHTING	A1173 FROM KINGS ROAD	IMMINGHAM					69413						
Y	37	STREET LIGHTING	A1173 FROM KINGS ROAD	IMMINGHAM					69414						
Y	38	STREET LIGHTING	A1173 FROM KINGS ROAD	IMMINGHAM					69415						
Y	39	STREET LIGHTING	A1173 FROM KINGS ROAD	IMMINGHAM					69416						
Y	40	STREET LIGHTING	A1173 FROM KINGS ROAD	IMMINGHAM					69417						
Y	41	STREET LIGHTING	A1173 FROM KINGS ROAD	IMMINGHAM					69418						
Y	42	STREET LIGHTING	A1173 FROM KINGS ROAD	IMMINGHAM					69419						
Y	43	STREET LIGHTING	A1173 FROM KINGS ROAD	IMMINGHAM					69420						
Y	44	STREET LIGHTING	A1173 FROM KINGS ROAD	IMMINGHAM					69421						
Y	1	STREET LIGHTING	TRONDHEIM WAY	STALLINGBOROUGH	520557.14	413643.49	1993		61934	1 Urbis LED	Teceo 24 LED 500mA	40 Watts	10.00 Metres	Galvanised Steel	
Y	1	STREET LIGHTING	TRONDHEIM WAY	STALLINGBOROUGH	520557.14	413643.49	1993		62468	1 Urbis LED	Teceo 24 LED 500mA	40 Watts	10.00 Metres	Galvanised Steel	
Y	2	STREET LIGHTING	TRONDHEIM WAY	STALLINGBOROUGH	520536.39	413659.97	1993		59453	1 Urbis LED	Teceo 24 LED 500mA	40 Watts	8.00 Metres	Galvanised Steel	
Y	3	STREET LIGHTING	TRONDHEIM WAY	STALLINGBOROUGH	520532.95	413686.91	2020	28/05/2020	67873	Urbis	Teceo 24 LED 500mA	40 Watts	8.00 Metres	Galvanised Steel	
Y	4	STREET LIGHTING	TRONDHEIM WAY	STALLINGBOROUGH	520514.72	413702.58	1993		59455	1 Urbis LED	Teceo 24 LED 500mA	40 Watts	8.00 Metres	Galvanised Steel	
Y	5	STREET LIGHTING	TRONDHEIM WAY	STALLINGBOROUGH	520526.55	413730.33	1993		59456	1 Urbis LED	Teceo 24 LED 500mA	40 Watts	8.00 Metres	Galvanised Steel	
Y	6	STREET LIGHTING	TRONDHEIM WAY	STALLINGBOROUGH	520514.27	413753.97	1993		59457	1 Urbis LED	Teceo 24 LED 500mA	40 Watts	8.00 Metres	Galvanised Steel	
Y	7	STREET LIGHTING	TRONDHEIM WAY	STALLINGBOROUGH	520524.9	413781.34	1993		59458	1 Urbis LED	Teceo 24 LED 500mA	40 Watts	8.00 Metres	Galvanised Steel	
Y	8	STREET LIGHTING	TRONDHEIM WAY	STALLINGBOROUGH	520518.19	413805.04	1993		59459	1 Urbis LED	Teceo 24 LED 500mA	40 Watts	8.00 Metres	Galvanised Steel	
Y	9	STREET LIGHTING	TRONDHEIM WAY	STALLINGBOROUGH	520489.46	413813.58	1993		59460	1 Urbis LED	Teceo 24 LED 500mA	40 Watts	8.00 Metres	Galvanised Steel	
Y	10	STREET LIGHTING	TRONDHEIM WAY	STALLINGBOROUGH	520488.96	413837.19	1993		59461	1 Urbis LED	Teceo 24 LED 500mA	40 Watts	8.00 Metres	Galvanised Steel	
Y	11	STREET LIGHTING	TRONDHEIM WAY	STALLINGBOROUGH	520473.39	413835.92	1992		59462	1 Urbis LED	Teceo 24 LED 500mA	40 Watts	8.00 Metres	Galvanised Steel	
Y	1	STREET LIGHTING	EUROPARC WAY	HEALING	523495.56	411501.56	1998		48226	Urbis	Teceo 48 LED 700mA	104 Watts	10.00 Metres	Steel	
Y	2	STREET LIGHTING	EUROPARC WAY	HEALING	523485.44	411478.72	1998		48227	1 Urbis LED	Teceo 48 LED 700mA	104 Watts	10.00 Metres	Steel	
Y	3	STREET LIGHTING	EUROPARC WAY	HEALING	523528.85	411485.42	1998		48228	1 Urbis LED	Teceo 48 LED 700mA	104 Watts	10.00 Metres	Steel	
Y	4	STREET LIGHTING	EUROPARC WAY	HEALING	523519.62	411464.61	1998		48229	1 Urbis LED	Teceo 48 LED 700mA	104 Watts	10.00 Metres	Steel	
Y	5	STREET LIGHTING	EUROPARC WAY	HEALING	523555.56	411474.34	1998		48230	1 Urbis LED	Teceo 48 LED 700mA	104 Watts	10.00 Metres	Steel	
Y	6	STREET LIGHTING	EUROPARC WAY	HEALING	523551.13	411451.38	1998		48231	1 Urbis LED	Teceo 48 LED 700mA	104 Watts	10.00 Metres	Steel	
Y	1	STREET LIGHTING	EUROPARC ROUNDABOUT	HEALING	523408.52	411475.86	1998		48218	1 Urbis LED	Teceo 48 LED 500mA	79 Watts	10.00 Metres	Galvanised Steel	
Y	2	STREET LIGHTING	EUROPARC ROUNDABOUT	HEALING	523402.04	411511.2	1998		48219	1 Urbis LED	Teceo 48 LED 700mA	104 Watts	10.00 Metres	Galvanised Steel	
Y	3	STREET LIGHTING	EUROPARC ROUNDABOUT	HEALING	523420.75	411534.34	1998		48220	1 Urbis LED	Teceo 48 LED 700mA	104 Watts	10.00 Metres	Galvanised Steel	
Y	4	STREET LIGHTING	EUROPARC ROUNDABOUT	HEALING	523450.95	411537.44	1998		48221	1 Urbis LED	Teceo 48 LED 700mA	104 Watts	10.00 Metres	Galvanised Steel	
Y	5	STREET LIGHTING	EUROPARC ROUNDABOUT	HEALING	523469.69	411525.1	1998		48222	1 Urbis LED	Teceo 48 LED 700mA	104 Watts	10.00 Metres	Galvanised Steel	
Y	6	STREET LIGHTING	EUROPARC ROUNDABOUT	HEALING	523477.66	411494.53	1998		48223	1 Urbis LED	Teceo 48 LED 700mA	104 Watts	10.00 Metres	Galvanised Steel	
Y	7	STREET LIGHTING	EUROPARC ROUNDABOUT	HEALING	523469.81	411475.92	1998		48224	1 Urbis LED	Teceo 48 LED 700mA	104 Watts	10.00 Metres	Galvanised Steel	
Y	8	STREET LIGHTING	EUROPARC ROUNDABOUT	HEALING	523437.28	411461.94	1998		48225	1 Urbis LED	Teceo 48 LED 700mA	104 Watts	10.00 Metres	Galvanised Steel	
Y	1	STREET LIGHTING	LAKESIDE ROUNDABOUT	EUROPARC	523572.5	411475.8	1998		52188	1 Urbis LED	Teceo 48 LED 500mA	79 Watts	10.00 Metres	Steel	
Y	2	STREET LIGHTING	LAKESIDE ROUNDABOUT	EUROPARC	523594.9	411486.3	1998		52189	1 Urbis LED	Teceo 48 LED 500mA	79 Watts	10.00 Metres	Steel	
Y	3	STREET LIGHTING	LAKESIDE ROUNDABOUT	EUROPARC	523609.79	411479.88	1998		52190	1 Urbis LED	Teceo 48 LED 500mA	79 Watts	10.00 Metres	Steel	
Y	4	STREET LIGHTING	LAKESIDE ROUNDABOUT	EUROPARC	523621.43	411466.55	1998		52191	1 Urbis LED	Teceo 48 LED 500mA	79 Watts	10.00 Metres	Steel	
Y	5	STREET LIGHTING	LAKESIDE ROUNDABOUT	EUROPARC	523622.19	411447.43	1998		52192	1 Urbis LED	Teceo 48 LED 500mA	79 Watts	10.00 Metres	Steel	
Y	6	STREET LIGHTING	LAKESIDE ROUNDABOUT	EUROPARC	523609.92	411431.29	1998		52193	1 Urbis LED	Teceo 48 LED 500mA	79 Watts	10.00 Metres	Steel	
Y	7	STREET LIGHTING	LAKESIDE ROUNDABOUT	EUROPARC	523590.95	411427.08	1998		52194	1 Urbis LED	Teceo 48 LED 500mA	79 Watts	10.00 Metres	Steel	
Y	8	STREET LIGHTING	LAKESIDE ROUNDABOUT	EUROPARC	523570.88	411437.46	1998		52195	1 Urbis LED	Teceo 48 LED 500mA	79 Watts	10.00 Metres	Steel	
Y	9	STREET LIGHTING	LAKESIDE ROUNDABOUT	EUROPARC	523565.69	411458.59	1998		52196	1 Urbis LED	Teceo 48 LED 500mA	79 Watts	10.00 Metres	Steel	
Y	1	STREET LIGHTING	GREAT COATES LINK ROUNDABOUT	HEALING	523316.39	411060.56	1998		61631	1 Urbis LED	Teceo 48 LED 500mA	79 Watts	10.00 Metres	Galvanised Steel	
Y	1	STREET LIGHTING	GREAT COATES LINK ROUNDABOUT	HEALING	523316.39	411060.56	1998		62163	1 Urbis LED	Teceo 48 LED 500mA	79 Watts	10.00 Metres	Galvanised Steel	
Y	2	STREET LIGHTING	GREAT COATES LINK ROUNDABOUT	HEALING	523298	411079.9	1998		49579	1 Urbis LED	Teceo 48 LED 700mA	104 Watts	10.00 Metres	Galvanised Steel	
Y	3	STREET LIGHTING	GREAT COATES LINK ROUNDABOUT	HEALING	523335.76	411078.46	1998		49580	1 Urbis LED	Teceo 48 LED 700mA	104 Watts	10.00 Metres	Galvanised Steel	
Y	1	STREET LIGHTING	EUROPARC LINK	HEALING	523359.71	411298.36	1998		61576	1 Urbis LED	Teceo 40 LED 500mA	64 Watts	10.00 Metres	Galvanised Steel	
Y	1	STREET LIGHTING	EUROPARC LINK	HEALING	523359.71	411298.36	1998		62108	1 Urbis LED	Teceo 40 LED 500mA	64 Watts	10.00 Metres	Galvanised Steel	
Y	2	STREET LIGHTING	EUROPARC LINK	HEALING	523369.33	411349.93	1998		48208	1 Urbis LED	Teceo 32 LED 500mA	52 Watts	10.00 Metres	Galvanised Steel	

Y	3	STREET LIGHTING	EUROPARC LINK	HEALING	523385.53	411342.59	1998		48209	1 Urbis LED	Teceo 32 LED 500mA	52 Watts	10.00 Metres	Galvanised Steel	
Y	4	STREET LIGHTING	EUROPARC LINK	HEALING	523386.17	411377.1	1998		48210	1 Urbis LED	Teceo 32 LED 500mA	52 Watts	10.00 Metres	Galvanised Steel	
Y	5	STREET LIGHTING	EUROPARC LINK	HEALING	523398.7	411371.28	1998		48211	1 Urbis LED	Teceo 32 LED 500mA	52 Watts	10.00 Metres	Galvanised Steel	
Y	6	STREET LIGHTING	EUROPARC LINK	HEALING	523397.56	411403.87	1998		48212	1 Urbis LED	Teceo 32 LED 500mA	52 Watts	10.00 Metres	Galvanised Steel	
Y	7	STREET LIGHTING	EUROPARC LINK	HEALING	523411.73	411399.94	1998		48213	1 Urbis LED	Teceo 32 LED 500mA	52 Watts	10.00 Metres	Galvanised Steel	
Y	8	STREET LIGHTING	EUROPARC LINK	HEALING	523409.74	411438.89	1998		48214	1 Urbis LED	Teceo 32 LED 500mA	52 Watts	10.00 Metres	Galvanised Steel	
Y	9	STREET LIGHTING	EUROPARC LINK	HEALING	523421.23	411420.06	1998		48215	1 Urbis LED	Teceo 32 LED 500mA	52 Watts	10.00 Metres	Galvanised Steel	
Y	10	STREET LIGHTING	EUROPARC LINK	HEALING	523416.42	411456.41	1998		48216	1 Urbis LED	Teceo 40 LED 500mA	64 Watts	10.00 Metres	Galvanised Steel	
Y	11	STREET LIGHTING	EUROPARC LINK	HEALING	523441.74	411446.18	1998		48217	1 Urbis LED	Teceo 40 LED 500mA	64 Watts	10.00 Metres	Galvanised Steel	
Y	1	STREET LIGHTING	GENESIS WAY	HEALING	523614.19	411494.45	1998		49149	1 Urbis LED	Teceo 48 LED 500mA	79 Watts	10.00 Metres	Steel	
Y	2	STREET LIGHTING	GENESIS WAY	HEALING	523624.2	411480.75	1998		49150	1 Urbis LED	Teceo 48 LED 500mA	79 Watts	10.00 Metres	Steel	
Y	3	STREET LIGHTING	GENESIS WAY	HEALING	523633.87	411508.27	1998		49151	1 Urbis LED	Teceo 48 LED 700mA	104 Watts	10.00 Metres	Steel	
Y	4	STREET LIGHTING	GENESIS WAY	HEALING	523661.34	411528.65	1998		49152	1 Urbis LED	Teceo 48 LED 700mA	104 Watts	10.00 Metres	Steel	
Y	5	STREET LIGHTING	GENESIS WAY	HEALING	523694.87	411545.65	1998		49153	1 Urbis LED	Teceo 48 LED 700mA	104 Watts	10.00 Metres	Steel	
Y	6	STREET LIGHTING	GENESIS WAY	HEALING	523734.23	411540.12	1998		49154	1 Urbis LED	Teceo 48 LED 700mA	104 Watts	10.00 Metres	Steel	
Y	7	STREET LIGHTING	GENESIS WAY	HEALING	523766	411550.5	1998		49155	1 Urbis LED	Teceo 48 LED 700mA	104 Watts	10.00 Metres	Steel	
Y	8	STREET LIGHTING	GENESIS WAY	HEALING	523797.64	411539.24	1998		49156	1 Urbis LED	Teceo 48 LED 700mA	104 Watts	10.00 Metres	Steel	
Y	9	STREET LIGHTING	GENESIS WAY	HEALING	523818.53	411526.8	1998		49157	1 Urbis LED	Teceo 48 LED 700mA	104 Watts	10.00 Metres	Steel	
Y	10	STREET LIGHTING	GENESIS WAY	HEALING	523854.04	411498.23	1998		49158	1 Urbis LED	Teceo 48 LED 700mA	104 Watts	10.00 Metres	Steel	
Y	11	STREET LIGHTING	GENESIS WAY	HEALING	523884.54	411473.18	1998		49159	1 Urbis LED	Teceo 48 LED 700mA	104 Watts	10.00 Metres	Steel	
Y	12	STREET LIGHTING	GENESIS WAY	HEALING	523910.12	411450.4	1998		49160	1 Urbis LED	Teceo 48 LED 700mA	104 Watts	10.00 Metres	Steel	
Y	13	STREET LIGHTING	GENESIS WAY	HEALING	523931.9	411416.59	1998		49161	1 Urbis LED	Teceo 48 LED 700mA	104 Watts	10.00 Metres	Steel	
Y	14	STREET LIGHTING	GENESIS WAY	HEALING	523969.98	411399.19	2000		49162	1 Urbis LED	Teceo 48 LED 700mA	104 Watts	10.00 Metres	Steel	
Y	15	STREET LIGHTING	GENESIS WAY	HEALING	523996.5	411375.95	2000		49163	1 Urbis LED	Teceo 48 LED 700mA	104 Watts	10.00 Metres	Steel	
Y	16	STREET LIGHTING	GENESIS WAY	HEALING	524019.32	411357.31	2000		49164	1 Urbis LED	Teceo 48 LED 700mA	104 Watts	10.00 Metres	Steel	
Y	17	STREET LIGHTING	GENESIS WAY	HEALING	524047.43	411332.11	2000		49165	1 Urbis LED	Teceo 48 LED 700mA	104 Watts	10.00 Metres	Steel	
Y	18	STREET LIGHTING	GENESIS WAY	HEALING	524073.06	411309.97	2000		49166	1 Urbis LED	Teceo 48 LED 700mA	104 Watts	10.00 Metres	Steel	
Y	19	STREET LIGHTING	GENESIS WAY	HEALING	524097.18	411289.74	2000		49167	1 Urbis LED	Teceo 48 LED 700mA	104 Watts	10.00 Metres	Steel	
Y	20	STREET LIGHTING	GENESIS WAY	HEALING	524118.91	411271.6	2000		49168	1 Urbis LED	Teceo 48 LED 700mA	104 Watts	10.00 Metres	Steel	
Y	21	STREET LIGHTING	GENESIS WAY	HEALING	524146.76	411247.28	2000		49169	1 Urbis LED	Teceo 48 LED 700mA	104 Watts	10.00 Metres	Steel	
Y	1	STREET LIGHTING	LAKESIDE	HEALING	523605.57	411414.34	1998		52168	1 Urbis LED	Teceo 48 LED 500mA	79 Watts	10.00 Metres	Steel	
Y	2	STREET LIGHTING	LAKESIDE	HEALING	523620	411417.79	1998		52169	1 Urbis LED	Teceo 48 LED 500mA	79 Watts	10.00 Metres	Steel	
Y	3	STREET LIGHTING	LAKESIDE	HEALING	523615.93	411381.78	1998		52170	1 Urbis LED	Teceo 48 LED 700mA	104 Watts	10.00 Metres	Steel	
Y	4	STREET LIGHTING	LAKESIDE	HEALING	523628.33	411343.75	1998		52171	1 Urbis LED	Teceo 48 LED 700mA	104 Watts	10.00 Metres	Steel	
Y	5	STREET LIGHTING	LAKESIDE	HEALING	523646.57	411317.34	1998		52172	1 Urbis LED	Teceo 48 LED 700mA	104 Watts	10.00 Metres	Steel	
Y	6	STREET LIGHTING	LAKESIDE	HEALING	523675.78	411290.76	1998		52173	1 Urbis LED	Teceo 48 LED 700mA	104 Watts	10.00 Metres	Steel	
Y	7	STREET LIGHTING	LAKESIDE	HEALING	523703.47	411276.82	1998		52174	1 Urbis LED	Teceo 48 LED 700mA	104 Watts	10.00 Metres	Steel	
Y	8	STREET LIGHTING	LAKESIDE	HEALING	523737.91	411264.06	1998		52175	1 Urbis LED	Teceo 48 LED 700mA	104 Watts	10.00 Metres	Steel	
Y	9	STREET LIGHTING	LAKESIDE	HEALING	523769.1	411253.2	2000		52176	1 Urbis LED	Teceo 48 LED 700mA	104 Watts	10.00 Metres	Steel	
Y	10	STREET LIGHTING	LAKESIDE	HEALING	523800.18	411242.27	2000		52177	1 Urbis LED	Teceo 48 LED 700mA	104 Watts	10.00 Metres	Steel	
Y	11	STREET LIGHTING	LAKESIDE	HEALING	523831.34	411231.56	2000		52178	1 Urbis LED	Teceo 48 LED 700mA	104 Watts	10.00 Metres	Steel	
Y	12	STREET LIGHTING	LAKESIDE	HEALING	523862.6	411220.59	2000		52179	1 Urbis LED	Teceo 48 LED 700mA	104 Watts	10.00 Metres	Steel	
Y	13	STREET LIGHTING	LAKESIDE	HEALING	523895.16	411209.03	2000		52180	1 Urbis LED	Teceo 48 LED 700mA	104 Watts	10.00 Metres	Steel	
Y	14	STREET LIGHTING	LAKESIDE	HEALING	523927.78	411197.36	2000		52181	1 Urbis LED	Teceo 48 LED 700mA	104 Watts	10.00 Metres	Steel	
Y	15	STREET LIGHTING	LAKESIDE	HEALING	523965.04	411195.35	2002		52182	1 Urbis LED	Teceo 48 LED 700mA	104 Watts	10.00 Metres	Steel	
Y	16	STREET LIGHTING	LAKESIDE	HEALING	523993.51	411174.61	2000		52183	1 Urbis LED	Teceo 48 LED 700mA	104 Watts	10.00 Metres	Steel	
Y	17	STREET LIGHTING	LAKESIDE	HEALING	524029.11	411168.56	2000		52184	1 Urbis LED	Teceo 48 LED 700mA	104 Watts	10.00 Metres	Steel	
Y	18	STREET LIGHTING	LAKESIDE	HEALING	524068.11	411176.87	2000		52185	1 Urbis LED	Teceo 48 LED 700mA	104 Watts	10.00 Metres	Steel	
Y	19	STREET LIGHTING	LAKESIDE	HEALING	524100.55	411199.83	2000		52186	1 Urbis LED	Teceo 48 LED 700mA	104 Watts	10.00 Metres	Steel	
Y	20	STREET LIGHTING	LAKESIDE	HEALING	524125.45	411225.68	2000		52187	1 Urbis LED	Teceo 48 LED 700mA	104 Watts	10.00 Metres	Steel	
Y	1	STREET LIGHTING	PEGASUS WAY	HEALING	523743.76	411573.64	1999		55105	1 Urbis LED	Teceo 48 LED 500mA	79 Watts	8.00 Metres	Steel	
Y	2	STREET LIGHTING	PEGASUS WAY	HEALING	523743.55	411608.44	1999		55106	1 Urbis LED	Teceo 48 LED 500mA	79 Watts	8.00 Metres	Steel	
Y	3	STREET LIGHTING	PEGASUS WAY	HEALING	523749.01	411644.39	1999		55107	1 Urbis LED	Teceo 48 LED 500mA	79 Watts	8.00 Metres	Steel	
Y	4	STREET LIGHTING	PEGASUS WAY	HEALING	523765.54	411664.43	1999		55108	1 Urbis LED	Teceo 48 LED 500mA	79 Watts	8.00 Metres	Steel	
Y	5	STREET LIGHTING	PEGASUS WAY	HEALING	523784.97	411684.11	2020	06/07/2020	55109	1 Urbis LED	Teceo 48 LED 500mA	79 Watts	8.00 Metres	Steel	
Y	6	STREET LIGHTING	PEGASUS WAY	HEALING	523779.98	411713.37	1999		55110	1 Urbis LED	Teceo 48 LED 500mA	79 Watts	8.00 Metres	Steel	
Y	7	STREET LIGHTING	PEGASUS WAY	HEALING	523810.06	411687.39	1999		55111	1 Urbis LED	Teceo 48 LED 500mA	79 Watts	8.00 Metres	Steel	
Y	1	STREET LIGHTING	INNOVATION WAY	HEALING	523837.1	411529.41	1999		51345	1 Urbis LED	Teceo 40 LED 500mA	64 Watts	8.00 Metres	Steel	
Y	2	STREET LIGHTING	INNOVATION WAY	HEALING	523864.75	411545.1	1999		51346	1 Urbis LED	Teceo 40 LED 500mA	64 Watts	8.00 Metres	Steel	
Y	3	STREET LIGHTING	INNOVATION WAY	HEALING	523886.79	411570.96	1999		51347	1 Urbis LED	Teceo 40 LED 500mA	64 Watts	8.00 Metres	Steel	
Y	4	STREET LIGHTING	INNOVATION WAY	HEALING	523900.46	411595.31	1999		51348	1 Urbis LED	Teceo 40 LED 500mA	64 Watts	8.00 Metres	Steel	
Y	1	STREET LIGHTING	ORIGIN WAY	HEALING	523784	411518	2008		54426	1 Urbis LED	Teceo 40 LED 500mA	64 Watts	8.00 Metres	Steel	
Y	2	STREET LIGHTING	ORIGIN WAY	HEALING	523767	411494	2008		54427	1 Urbis LED	Teceo 40 LED 500mA	64 Watts	8.00 Metres	Steel	
Y	3	STREET LIGHTING	ORIGIN WAY	HEALING	523748.01	411464.03	2008		54428	1 Urbis LED	Teceo 40 LED 500mA	64 Watts	8.00 Metres	Steel	
Y	4	STREET LIGHTING	ORIGIN WAY	HEALING	523768.73	411442.07	2008		54429	1 Urbis LED	Teceo 40 LED 500mA	64 Watts	8.00 Metres	Steel	
Y	5	STREET LIGHTING	ORIGIN WAY	HEALING	523793.42	411420.88	2008		54430	1 Urbis LED	Teceo 40 LED 500mA	64 Watts	8.00 Metres	Steel	
Y	6	STREET LIGHTING	ORIGIN WAY	HEALING	523812.12	411405.8	2008		54431	1 Urbis LED	Teceo 40 LED 500mA	64 Watts	8.00 Metres	Steel	
Y	7	STREET LIGHTING	ORIGIN WAY	HEALING	523838.18	411406.51	2008		54432	1 Urbis LED	Teceo 40 LED 500mA	64 Watts	8.00 Metres	Steel	
Y	8	STREET LIGHTING	ORIGIN WAY	HEALING	523861.69	411431.5	2008		54433	1 Urbis LED	Teceo 40 LED 500mA	64 Watts	8.00 Metres	Steel	
Y	9	STREET LIGHTING	ORIGIN WAY	HEALING	523878.02	411450.44	2008		54434	1 Urbis LED	Teceo 40 LED 500mA	64 Watts	8.00 Metres	Steel	
Y	1	STREET LIGHTING	PERYTON WAY	HEALING	524035	411361.4	2000		55345	1 Urbis LED	Teceo 40 LED 500mA	64 Watts	8.00 Metres	Steel	
Y	2	STREET LIGHTING	PERYTON WAY	HEALING	524059.58	411371.66	2000		55346	1 Urbis LED	Teceo 40 LED 500mA	64 Watts	8.00 Metres	Steel	
Y	3	STREET LIGHTING	PERYTON WAY	HEALING	524084.9	411401.3	2000		55347	1 Urbis LED	Teceo 40 LED 500mA	64 Watts	8.00 Metres	Steel	
Y	4	STREET LIGHTING	PERYTON WAY	HEALING	524093.7	411420.6	2000		55348	1 Urbis LED	Teceo 40 LED 500mA	64 Watts	8.00 Metres	Steel	
Y	1	STREET LIGHTING	FOOTPATH BETWEEN STATION ROAD	HEALING					68455	Urbis	Axia 16 LED 350mA	19 Watts	6.00 Metres	Steel	
Y	1	STREET LIGHTING	GREAT COATES ROAD	HEALING	521628.09	410220.48	1986		49655	1 Urbis LED	Teceo 48 LED 700mA	104 Watts	10.00 Metres	Galvanised Steel	
Y	2	STREET LIGHTING	GREAT COATES ROAD	HEALING	521641.76	410201.37	1986		49656	1 Urbis LED	Teceo 48 LED 700mA	104 Watts	10.00 Metres	Galvanised Steel	
Y	3	STREET LIGHTING	GREAT COATES ROAD	HEALING	521663.03	410171.24	1986		49657	1 Urbis LED	Teceo 48 LED 700mA	104 Watts	10.00 Metres	Galvanised Steel	
Y	4	STREET LIGHTING	GREAT COATES ROAD	HEALING	521682.65	410143.27	1986		49658	1 Urbis LED	Teceo 48 LED 700mA	104 Watts	10.00 Metres	Galvanised Steel	
Y	5	STREET LIGHTING	GREAT COATES ROAD	HEALING	521705.81	410107.51	1986		49659	1 Urbis LED	Teceo 48 LED 700mA	104 Watts	10.00 Metres	Galvanised Steel	
Y	6	STREET LIGHTING	GREAT COATES ROAD	HEALING	521721.82	410067.98	1986		49660	1 Urbis LED	Teceo 48 LED 700mA	104 Watts	10.00 Metres	Galvanised Steel	
Y	7	STREET LIGHTING	GREAT COATES ROAD	HEALING	521742.2	410038.84	1986		49661	1 Urbis LED	Teceo 48 LED 700mA	104 Watts	10.00 Metres	Galvanised Steel	
Y	8	STREET LIGHTING	GREAT COATES ROAD	HEALING	521762.45	410009.73	1986		49662	1 Urbis LED	Teceo 48 LED 700mA	104 Watts	10.00 Metres	Galvanised Steel	
Y	9	STREET LIGHTING	GREAT COATES ROAD	HEALING	521781.57	409981.57	2006		49663	1 Urbis LED	Teceo 48 LED 700mA	104 Watts	10.00 Metres	Stainless Steel	
Y	10	STREET LIGHTING	GREAT COATES ROAD	HEALING	521801.31	409952.45	2008		49664	1 Urbis LED	Teceo 48 LED 700mA	104 Watts	10.00 Metres	Steel	
Y	11	STREET LIGHTING	GREAT COATES ROAD	HEALING	521818.78	409927.05	2003		49665	1 Urbis LED	Teceo 48 LED 700mA	104 Watts	10.00 Metres	Stainless Steel	
Y	12	STREET LIGHTING	GREAT COATES ROAD	HEALING	521845.81	409916.56	1986		49666	1 Urbis LED	Teceo 48 LED 700mA	104 Watts	10.00 Metres	Galvanised Steel	
Y	13	STREET LIGHTING	GREAT COATES ROAD	HEALING	521878.92	409919.86	2014		49667	1 Urbis LED	Teceo 48 LED 700mA	104 Watts	10.00 Metres	Galvanised Steel	
Y	14	STREET LIGHTING	GREAT COATES ROAD	HEALING	521913.13	409925.33	1986		49668	1 Urbis LED	Teceo 48 LED 700mA	104 Watts	10.00 Metres	Galvanised Steel	
Y	15	STREET LIGHTING	GREAT COATES ROAD	HEALING	521955.4	409931.92	1986		49669	1 Urbis LED	Teceo 48 LED 700mA	104 Watts	10.00 Metres	Galvanised Steel	
Y	16	STREET LIGHTING	GREAT COATES ROAD	HEALING	521985.4	409936.6	1986		49670	1 Urbis LED	Teceo 48 LED 700mA	104 Watts	10.00 Metres	Galvanised Steel	
Y	17	STREET LIGHTING	GREAT COATES ROAD	HEALING	522019.07	409941.85	2003		49671	1 Urbis LED	Teceo 48 LED 700mA	104 Watts	10.00 Metres	Stainless Steel	
Y	18	STREET LIGHTING	GREAT COATES ROAD	HEALING	522055.4	409947.11	1986		49672	1 Urbis LED	Teceo 48 LED 700mA	104 Watts	10.00 Metres	Galvanised Steel	
Y	19	STREET LIGHTING	GREAT COATES ROAD	HEALING	522085.27	409951.73	1983		49673	1 Urbis LED	Teceo 48 LED 700mA	104 Watts	10.00 Metres	Galvanised Steel	
Y	20	STREET LIGHTING	GREAT COATES ROAD	HEALING	522106.5	409957	2003		49674	1 Urbis LED	Teceo 16 LED 500mA	28 Watts	6.00 Metres	Stainless Steel	
Y	21	STREET LIGHTING	GREAT COATES ROAD	HEALING	522110.92	409968.3	2003		49675	1 Urbis LED	Teceo 24 LED 500mA	40 Watts	6.00 Metres	Stainless Steel	
Y	22	STREET LIGHTING	GREAT COATES ROAD	HEALING	522125.5	409969.85	2003		49676	1 Urbis LED	Teceo 48 LED 700mA	104 Watts	10.00 Metres	Stainless Steel	
Y	23	STREET LIGHTING	GREAT COATES ROAD	HEALING	522165.32	409976.56	2003		49677	1 Urbis LED	Teceo 48 LED 700mA	104 Watts	10.00 Metres	Stainless Steel	
Y	24	STREET LIGHTING	GREAT COATES ROAD	HEALING	522207.36	409982.82	2003		49678	1 Urbis LED	Teceo 48 LED 700mA	104 Watts	10.00 Metres	Stainless Steel	
Y	25	STREET LIGHTING	GREAT COATES ROAD	HEALING	522245.28	409989.11	2003		49679	1 Urbis LED	Teceo 48 LED 700mA	104 Watts	10.00 Metres	Stainless Steel	
Y	26	STREET LIGHTING	GREAT COATES ROAD	HEALING	522285.84	409995.57	2003		49680	1 Urbis LED	Teceo 48 LED 700mA	104 Watts	10.00 Metres	Stainless Steel	
Y	27	STREET LIGHTING	GREAT COATES ROAD	HEALING	522327.61	410002.84	2003		49681	1 Urbis LED	Teceo 48 LED 700mA	104 Watts	10.00 Metres	Stainless Steel	
Y	28	STREET LIGHTING	GREAT COATES ROAD	HEALING	522362.53	410007.63	2003		49682	1 Urbis LED	Teceo 48 LED 700mA	104 Watts	10.00 Metres	Stainless Steel	
Y	29	STREET LIGHTING	GREAT COATES ROAD	HEALING	522402.31	410013.84	2003		49683	1 Urbis LED	Teceo 48 LED 700mA	104 Watts	10.00 Metres	Stainless Steel	
Y	30	STREET LIGHTING	GREAT COATES ROAD	HEALING	522447.07	410014.52	2003		49684	1 Urbis LED	Teceo 48 LED 700mA	104 Watts	10.00 Metres	Stainless Steel	
Y	31	STREET LIGHTING	GREAT COATES ROAD	HEALING	522485.39	410019.82	2003		49685	1 Urbis LED	Teceo 48 LED 700mA	104 Watts	10.00 Metres	Stainless Steel	
Y	32	STREET LIGHTING	GREAT COATES ROAD	HEALING	522527.36	410018.14	2003		49686	1 Urbis LED	Teceo 48 LED 700mA	104 Watts	10.00 Metres	Stainless Steel	
Y	33	STREET LIGHTING	GREAT COATES ROAD	HEALING	522569.1	410015.25	2003		49687	1 Urbis LED	Teceo 48 LED 700mA	104 Watts	10.00 Metres	Stainless Steel	
Y	34	STREET LIGHTING	GREAT COATES ROAD	HEALING	522609.25	410013.5	2003		49688	1 Urbis LED	Teceo 48 LED 700mA	104 Watts	10.00 Metres	Stainless Steel	
Y	35	STREET LIGHTING	GREAT COATES ROAD	HEALING	522650.3	410013.11	2003		49689	1 Urbis LED	Teceo 48 LED 700mA	104 Watts	10.00 Metres	Stainless Steel	

Y	36	STREET LIGHTING	GREAT COATES ROAD	HEALING	522692.4	410009.03	2003		49690	1 Urbis LED	Teceo 48 LED 700mA	104 Watts	10.00 Metres	Stainless Steel	
Y	37	STREET LIGHTING	GREAT COATES ROAD	HEALING	522726.49	410007.41	2003		49691	1 Urbis LED	Teceo 48 LED 700mA	104 Watts	10.00 Metres	Stainless Steel	
Y	38	STREET LIGHTING	GREAT COATES ROAD	HEALING	522760.2	410010.88	2003		49692	1 Urbis LED	Teceo 48 LED 700mA	104 Watts	10.00 Metres	Stainless Steel	
Y	39	STREET LIGHTING	GREAT COATES ROAD	HEALING	522797.87	410005.1	2003		49693	1 Urbis LED	Teceo 48 LED 700mA	104 Watts	10.00 Metres	Stainless Steel	
Y	40	STREET LIGHTING	GREAT COATES ROAD	HEALING	522834.8	410005	1983		49694	1 Urbis LED	Teceo 48 LED 700mA	104 Watts	10.00 Metres	Galvanised Steel	
Y	1	STREET LIGHTING	POACHERS RISE	STALLINGBOROUGH	520121.18	411432.16	2010	01/04/2010	62948	Urbis	Axia 16 LED 350mA	19 Watts	6.00 Metres	Galvanised Steel	
Y	2	STREET LIGHTING	POACHERS RISE	STALLINGBOROUGH	520125.38	411403.76	2010	01/04/2010	62949	Urbis	Axia 16 LED 350mA	19 Watts	6.00 Metres	Galvanised Steel	
Y	3	STREET LIGHTING	POACHERS RISE	STALLINGBOROUGH	520141.05	411388.22	2010	01/04/2010	62950	Urbis	Axia 16 LED 350mA	19 Watts	6.00 Metres	Galvanised Steel	
Y	4	STREET LIGHTING	POACHERS RISE	STALLINGBOROUGH	520172.31	411387.33	2010	01/04/2010	62951	Urbis	Axia 16 LED 350mA	19 Watts	6.00 Metres	Galvanised Steel	
Y	5	STREET LIGHTING	POACHERS RISE	STALLINGBOROUGH	520192.37	411408.73	2010	01/04/2010	62952	Urbis	Axia 16 LED 350mA	19 Watts	6.00 Metres	Galvanised Steel	
Y	6	STREET LIGHTING	POACHERS RISE	STALLINGBOROUGH	520210.52	411425.61	2010	01/04/2010	62953	Urbis	Axia 16 LED 350mA	19 Watts	6.00 Metres	Galvanised Steel	
Y	1	STREET LIGHTING	ALMOND GROVE	STALLINGBOROUGH	520578.06	411825.58	2002		43103	Urbis	Axia 16 LED 350mA	19 Watts	6.00 Metres	Galvanised Steel	
Y	2	STREET LIGHTING	ALMOND GROVE	STALLINGBOROUGH	520588.56	411804.79	2002		43104	Urbis	Axia 16 LED 350mA	19 Watts	6.00 Metres	Galvanised Steel	
Y	3	STREET LIGHTING	ALMOND GROVE	STALLINGBOROUGH	520603.15	411785.56	2002		43105	Urbis	Axia 16 LED 350mA	19 Watts	6.00 Metres	Galvanised Steel	
Y	4	STREET LIGHTING	ALMOND GROVE	STALLINGBOROUGH	520614.61	411798.31	2002		43106	Urbis	Axia 16 LED 350mA	19 Watts	6.00 Metres	Galvanised Steel	
Y	1	STREET LIGHTING	ANTHONY WAY	STALLINGBOROUGH	519782.42	411411.31	2021	18/02/2021	68301	Urbis	Axia 16 LED 350mA	19 Watts	6.00 Metres	Galvanised Steel	
Y	2	STREET LIGHTING	ANTHONY WAY	STALLINGBOROUGH	519762.1	411405.14	1984		43250	Urbis	Axia 16 LED 350mA	19 Watts	5.00 Metres	Galvanised Steel	
Y	3	STREET LIGHTING	ANTHONY WAY	STALLINGBOROUGH	519715.01	411419.82	1984		43251	Urbis	Axia 16 LED 350mA	19 Watts	5.00 Metres	Galvanised Steel	
Y	1	STREET LIGHTING	BUTTERCROSS CLOSE	STALLINGBOROUGH	520321.86	411743.59	1996		45014	Urbis	Axia 16 LED 350mA	19 Watts	5.00 Metres	Galvanised Steel	
Y	2	STREET LIGHTING	BUTTERCROSS CLOSE	STALLINGBOROUGH	520307.31	411763.02	1996		45015	Urbis	Axia 16 LED 350mA	19 Watts	5.00 Metres	Galvanised Steel	
Y	1	STREET LIGHTING	CARLTON AVENUE	HEALING	521431.26	410548.55	1987		45245	Urbis	Axia 16 LED 350mA	19 Watts	5.00 Metres	Galvanised Steel	
Y	2	STREET LIGHTING	CARLTON AVENUE	HEALING	521459.83	410592.1	2009		45246	Urbis	Axia 16 LED 350mA	19 Watts	6.00 Metres	Steel	
Y	3	STREET LIGHTING	CARLTON AVENUE	HEALING	521512.24	410681.1	2014		62681	Urbis	Axia 16 LED 350mA	19 Watts	6.00 Metres	Galvanised Steel	
Y	4	STREET LIGHTING	CARLTON AVENUE	HEALING	521536.04	410705.41	2014		45248	Urbis	Axia 16 LED 350mA	19 Watts	6.00 Metres	Galvanised Steel	
Y	5	STREET LIGHTING	CARLTON AVENUE	HEALING	521551.1	410745.09	2014		45249	Urbis	Axia 16 LED 350mA	19 Watts	6.00 Metres	Galvanised Steel	
Y	1	STREET LIGHTING	CARLTON ROAD	HEALING	521567.26	410604.44	1992		45261	Urbis	Axia 16 LED 350mA	19 Watts	6.00 Metres	Galvanised Steel	
Y	2	STREET LIGHTING	CARLTON ROAD	HEALING	521543.72	410632.73	1992		45262	Urbis	Axia 16 LED 350mA	19 Watts	6.00 Metres	Galvanised Steel	
Y	3	STREET LIGHTING	CARLTON ROAD	HEALING	521522.37	410646.55	1992		45263	Urbis	Axia 16 LED 350mA	19 Watts	6.00 Metres	Galvanised Steel	
Y	4	STREET LIGHTING	CARLTON ROAD	HEALING	521498.91	410648.87	1992		45264	Urbis	Axia 16 LED 350mA	19 Watts	6.00 Metres	Galvanised Steel	
Y	5	STREET LIGHTING	CARLTON ROAD	HEALING	521488.28	410668.54	1992		45265	Urbis	Axia 16 LED 350mA	19 Watts	6.00 Metres	Galvanised Steel	
Y	6	STREET LIGHTING	CARLTON ROAD	HEALING	521463.49	410686.29	2020	14/07/2020	67948	Urbis	Axia 16 LED 350mA	19 Watts	6.00 Metres	Galvanised Steel	
Y	7	STREET LIGHTING	CARLTON ROAD	HEALING	521434.92	410690.38	1992		45267	Urbis	Axia 16 LED 350mA	19 Watts	6.00 Metres	Galvanised Steel	
Y	1	STREET LIGHTING	CHURCH LANE	STALLINGBOROUGH	519794.09	411410.05	1986		46028	Urbis	Axia 16 LED 350mA	19 Watts	5.00 Metres	Galvanised Steel	
Y	2	STREET LIGHTING	CHURCH LANE	STALLINGBOROUGH	519788.86	411429.29	1986		46029	Urbis	Axia 16 LED 350mA	19 Watts	5.00 Metres	Galvanised Steel	
Y	3	STREET LIGHTING	CHURCH LANE	STALLINGBOROUGH	519779.24	411462.2	1986		46030	Urbis	Axia 16 LED 350mA	19 Watts	5.00 Metres	Galvanised Steel	
Y	4	STREET LIGHTING	CHURCH LANE	STALLINGBOROUGH	519778.44	411498.94	1989		46031	Urbis	Axia 16 LED 350mA	19 Watts	5.00 Metres	Galvanised Steel	
Y	5	STREET LIGHTING	CHURCH LANE	STALLINGBOROUGH	519780.59	411533.12	1986		46032	Urbis	Axia 16 LED 350mA	19 Watts	5.00 Metres	Galvanised Steel	
Y	6	STREET LIGHTING	CHURCH LANE	STALLINGBOROUGH	519760.51	411555.51	1986		46033	Urbis	Axia 16 LED 350mA	19 Watts	5.00 Metres	Galvanised Steel	
Y	7	STREET LIGHTING	CHURCH LANE	STALLINGBOROUGH	519734.91	411577.91	2021	18/02/2021	68310	Urbis	Axia 16 LED 350mA	19 Watts	6.00 Metres	Galvanised Steel	
Y	8	STREET LIGHTING	CHURCH LANE	STALLINGBOROUGH	519704.2	411593.57	1986		46035	Urbis	Axia 16 LED 350mA	19 Watts	5.00 Metres	Galvanised Steel	
Y	9	STREET LIGHTING	CHURCH LANE	STALLINGBOROUGH	519666.1	411606.86	1986		46036	Urbis	Axia 16 LED 350mA	19 Watts	5.00 Metres	Galvanised Steel	
Y	10	STREET LIGHTING	CHURCH LANE	STALLINGBOROUGH	519633.57	411623.13	1986		46037	Urbis	Axia 16 LED 350mA	19 Watts	5.00 Metres	Galvanised Steel	
Y	11	STREET LIGHTING	CHURCH LANE	STALLINGBOROUGH	519620.28	411648.51	1986		46038	Urbis	Axia 16 LED 350mA	19 Watts	5.00 Metres	Galvanised Steel	
Y	12	STREET LIGHTING	CHURCH LANE	STALLINGBOROUGH	519601.55	411674.86	1986		46039	Urbis	Axia 16 LED 350mA	19 Watts	5.00 Metres	Galvanised Steel	
Y	13	STREET LIGHTING	CHURCH LANE	STALLINGBOROUGH	519587.12	411701.73	1986		46040	Urbis	Axia 16 LED 350mA	19 Watts	5.00 Metres	Galvanised Steel	
Y	1	STREET LIGHTING	CLARKSON DRIVE	STALLINGBOROUGH	520388.61	411686.95	1992		46127	Urbis	Axia 16 LED 350mA	19 Watts	5.00 Metres	Galvanised Steel	
Y	2	STREET LIGHTING	CLARKSON DRIVE	STALLINGBOROUGH	520386.33	411712.71	1992		46128	Urbis	Axia 16 LED 350mA	19 Watts	5.00 Metres	Galvanised Steel	
Y	3	STREET LIGHTING	CLARKSON DRIVE	STALLINGBOROUGH	520368.86	411739.73	1992		46129	Urbis	Axia 16 LED 350mA	19 Watts	5.00 Metres	Galvanised Steel	
Y	4	STREET LIGHTING	CLARKSON DRIVE	STALLINGBOROUGH	520340.26	411743.21	1992		46130	Urbis	Axia 16 LED 350mA	19 Watts	5.00 Metres	Galvanised Steel	
Y	5	STREET LIGHTING	CLARKSON DRIVE	STALLINGBOROUGH	520320.77	411721.13	1992		46131	Urbis	Axia 16 LED 350mA	19 Watts	5.00 Metres	Galvanised Steel	
Y	6	STREET LIGHTING	CLARKSON DRIVE	STALLINGBOROUGH	520303.68	411698.78	1992		46132	Urbis	Axia 16 LED 350mA	19 Watts	5.00 Metres	Galvanised Steel	
Y	7	STREET LIGHTING	CLARKSON DRIVE	STALLINGBOROUGH	520271.02	411708.22	1992		46133	Urbis	Axia 16 LED 350mA	19 Watts	5.00 Metres	Galvanised Steel	
Y	8	STREET LIGHTING	CLARKSON DRIVE	STALLINGBOROUGH	520252.54	411734.53	1992		46134	Urbis	Axia 16 LED 350mA	19 Watts	5.00 Metres	Galvanised Steel	
Y	9	STREET LIGHTING	CLARKSON DRIVE	STALLINGBOROUGH	520228.95	411726.37	1992		46135	Urbis	Axia 16 LED 350mA	19 Watts	5.00 Metres	Galvanised Steel	
Y	10	STREET LIGHTING	CLARKSON DRIVE	STALLINGBOROUGH	520216.92	411703.77	1992		46136	Urbis	Axia 16 LED 350mA	19 Watts	5.00 Metres	Galvanised Steel	
Y	1	STREET LIGHTING	FORDS AVENUE	HEALING	521915.15	410414.9	1992		48844	Urbis	Axia 16 LED 350mA	19 Watts	6.00 Metres	Galvanised Steel	
Y	2	STREET LIGHTING	FORDS AVENUE	HEALING	521932.36	410440.59	1992		48845	Urbis	Axia 16 LED 350mA	19 Watts	6.00 Metres	Galvanised Steel	
Y	3	STREET LIGHTING	FORDS AVENUE	HEALING	521952.19	410454.66	1992		48846	Urbis	Axia 16 LED 350mA	19 Watts	6.00 Metres	Galvanised Steel	
Y	4	STREET LIGHTING	FORDS AVENUE	HEALING	521962.31	410484.46	1992		48847	Urbis	Axia 16 LED 350mA	19 Watts	6.00 Metres	Galvanised Steel	
Y	5	STREET LIGHTING	FORDS AVENUE	HEALING	521980.54	410500.22	2002		48848	Urbis	Axia 16 LED 350mA	19 Watts	6.00 Metres	Stainless Steel	
Y	6	STREET LIGHTING	FORDS AVENUE	HEALING	521989.27	410526.71	1992		48849	Urbis	Axia 16 LED 350mA	19 Watts	6.00 Metres	Galvanised Steel	
Y	7	STREET LIGHTING	FORDS AVENUE	HEALING	522002.51	410547.69	1992		48850	Urbis	Axia 16 LED 350mA	19 Watts	6.00 Metres	Galvanised Steel	
Y	8	STREET LIGHTING	FORDS AVENUE	HEALING	522024.53	410565.16	1992		48851	Urbis	Axia 16 LED 350mA	19 Watts	6.00 Metres	Galvanised Steel	
Y	9	STREET LIGHTING	FORDS AVENUE	HEALING	522036.43	410588.53	1992		48852	Urbis	Axia 16 LED 350mA	19 Watts	6.00 Metres	Galvanised Steel	
Y	10	STREET LIGHTING	FORDS AVENUE	HEALING	522031.24	410617.65	1992		48853	Urbis	Axia 16 LED 350mA	19 Watts	6.00 Metres	Galvanised Steel	
Y	11	STREET LIGHTING	FORDS AVENUE	HEALING	522044.91	410645.3	1992		48854	Urbis	Axia 16 LED 350mA	19 Watts	6.00 Metres	Galvanised Steel	
Y	12	STREET LIGHTING	FORDS AVENUE	HEALING	522039.46	410672.07	1992		48855	Urbis	Axia 16 LED 350mA	19 Watts	6.00 Metres	Galvanised Steel	
Y	13	STREET LIGHTING	FORDS AVENUE	HEALING	522052.12	410692.58	1992		48856	Urbis	Axia 16 LED 350mA	19 Watts	6.00 Metres	Galvanised Steel	
Y	14	STREET LIGHTING	FORDS AVENUE	HEALING	522047.06	410725.35	1992		48857	Urbis	Axia 16 LED 350mA	19 Watts	6.00 Metres	Galvanised Steel	
Y	15	STREET LIGHTING	FORDS AVENUE	HEALING	522059.34	410748.96	1992		48858	Urbis	Axia 16 LED 350mA	19 Watts	6.00 Metres	Galvanised Steel	
Y	16	STREET LIGHTING	FORDS AVENUE	HEALING	522054.15	410782.32	1992		48859	Urbis	Axia 16 LED 350mA	19 Watts	6.00 Metres	Galvanised Steel	
Y	17	STREET LIGHTING	FORDS AVENUE	HEALING	522058.2	410808.71	1992		48860	Urbis	Axia 16 LED 350mA	19 Watts	6.00 Metres	Galvanised Steel	
Y	18	STREET LIGHTING	FORDS AVENUE	HEALING	522061.74	410831.05	1992		48861	Urbis	Axia 16 LED 350mA	19 Watts	6.00 Metres	Galvanised Steel	
Y	19	STREET LIGHTING	FORDS AVENUE	HEALING	522077.43	410859.85	1992		48862	Urbis	Axia 16 LED 350mA	19 Watts	6.00 Metres	Galvanised Steel	
Y	1	STREET LIGHTING	IVY FARM COURT	HEALING	521563.89	410280	1991		51393	1 Urbis LED	Axia 16 LED 500mA	28 Watts	5.00 Metres	Galvanised Steel	
Y	2	STREET LIGHTING	IVY FARM COURT	HEALING	521533.38	410271.33	1991		51394	1 Urbis LED	Axia 16 LED 500mA	28 Watts	5.00 Metres	Galvanised Steel	
Y	3	STREET LIGHTING	IVY FARM COURT	HEALING	521511.99	410255.24	1991		51395	1 Urbis LED	Axia 16 LED 500mA	28 Watts	5.00 Metres	Galvanised Steel	
Y	4	STREET LIGHTING	IVY FARM COURT	HEALING	521492.5	410237.97	1991		51396	1 Urbis LED	Axia 16 LED 500mA	28 Watts	5.00 Metres	Galvanised Steel	
Y	1	STREET LIGHTING	LINDSEY DRIVE	HEALING	522085.11	410421.8	1965		52570	1 Urbis LED	Axia 16 LED 500mA	28 Watts	5.00 Metres	Galvanised Steel	
Y	2	STREET LIGHTING	LINDSEY DRIVE	HEALING	522119.04	410409.59	2014		62689	1 Urbis LED	Axia 16 LED 500mA	28 Watts	6.00 Metres	Galvanised Steel	
Y	3	STREET LIGHTING	LINDSEY DRIVE	HEALING	522168.27	410404.19	2014		62690	1 Urbis LED	Axia 16 LED 500mA	28 Watts	6.00 Metres	Galvanised Steel	
Y	4	STREET LIGHTING	LINDSEY DRIVE	HEALING	522210.73	410424.43	2014		62691	1 Urbis LED	Axia 16 LED 500mA	28 Watts	6.00 Metres	Galvanised Steel	
Y	5	STREET LIGHTING	LINDSEY DRIVE	HEALING	522250.6	410431.84	2014		62692	1 Urbis LED	Axia 16 LED 500mA	28 Watts	6.00 Metres	Galvanised Steel	
Y	6	STREET LIGHTING	LINDSEY DRIVE	HEALING	522281.86	410469.05	2014		62693	1 Urbis LED	Axia 16 LED 500mA	28 Watts	6.00 Metres	Galvanised Steel	
Y	7	STREET LIGHTING	LINDSEY DRIVE	HEALING	522277.56	410492.02	2014		62694	1 Urbis LED	Axia 16 LED 500mA	28 Watts	6.00 Metres	Galvanised Steel	
Y	1	STREET LIGHTING	LOW ROAD	HEALING	521615.94	410237.5	1986		52963	1 Urbis LED	Axia 16 LED 500mA	28 Watts	10.00 Metres	Galvanised Steel	
Y	2	STREET LIGHTING	LOW ROAD	HEALING	521589.33	410256.2	1996		52964	1 Urbis LED	Axia 16 LED 500mA	28 Watts	6.00 Metres	Galvanised Steel	
Y	3	STREET LIGHTING	LOW ROAD	HEALING	521574.14	410277.53	1996		52965	1 Urbis LED	Axia 16 LED 500mA	28 Watts	6.00 Metres	Galvanised Steel	
Y	4	STREET LIGHTING	LOW ROAD	HEALING	521555.66	410303.35	1996		52966	1 Urbis LED	Axia 16 LED 500mA	28 Watts	6.00 Metres	Galvanised Steel	
Y	5	STREET LIGHTING	LOW ROAD	HEALING	521533.38	410333.92	1996		52967	1 Urbis LED	Axia 16 LED 500mA	28 Watts	6.00 Metres	Galvanised Steel	
Y	6	STREET LIGHTING	LOW ROAD	HEALING	521516.17	410369.23	1996		52968	1 Urbis LED	Axia 16 LED 500mA	28 Watts	6.00 Metres	Galvanised Steel	
Y	7	STREET LIGHTING	LOW ROAD	HEALING	521480.47	410393.28	1996		52969	1 Urbis LED	Axia 16 LED 500mA	28 Watts	6.00 Metres	Galvanised Steel	
Y	1	STREET LIGHTING	MALLARD CLOSE	HEALING	521306.81	410499.17	2014		62696	1 Urbis LED	Axia 16 LED 500mA	28 Watts	6.00 Metres	Galvanised Steel	
Y	2	STREET LIGHTING	MALLARD CLOSE	HEALING	521304.86	410468.2	2014		62697	1 Urbis LED	Axia 16 LED 500mA	28 Watts	6.00 Metres	Galvanised Steel	
Y	1	STREET LIGHTING	MEADOW DRIVE	HEALING	522226.46	410690.42	2014		62698	1 Urbis LED	Axia 16 LED 500mA	28 Watts	6.00 Metres	Galvanised Steel	
Y	2	STREET LIGHTING	MEADOW DRIVE	HEALING	522248.36	410718.2	2014		62699	1 Urbis LED	Axia 16 LED 500mA	28 Watts	6.00 Metres	Galvanised Steel	
Y	3	STREET LIGHTING	MEADOW DRIVE	HEALING	522290.01	410715.99	2014		62700	1 Urbis LED	Axia 16 LED 500mA	28 Watts	6.00 Metres	Galvanised Steel	
Y	4	STREET LIGHTING	MEADOW DRIVE	HEALING	522330.51	410710.35	2014		62701	1 Urbis LED	Axia 16 LED 500mA	28 Watts	6.00 Metres	Galvanised Steel	
Y	5	STREET LIGHTING	MEADOW DRIVE	HEALING	522345.8	410671.54	2014		62702	1 Urbis LED	Axia 16 LED 500mA	28 Watts	6.00 Metres	Galvanised Steel	
Y	6	STREET LIGHTING	MEADOW DRIVE	HEALING	522330.23	410629.9	2014		62703	1 Urbis LED	Axia 16 LED 500mA	28 Watts	6.00 Metres	Galvanised Steel	
Y	1	STREET LIGHTING	OAK ROAD	HEALING	521833.5	410977.49	1992		54294	1 Urbis LED	Axia 16 LED 500mA	28 Watts	5.00 Metres	Galvanised Steel	
Y	2	STREET LIGHTING	OAK ROAD	HEALING	521847.58	410954.32	1992		54295	1 Urbis LED	Axia 16 LED 500mA	28 Watts	5.00 Metres	Galvanised Steel	
Y	3	STREET LIGHTING	OAK ROAD	HEALING	521876.69	410950.08	1992		54296	1 Urbis LED	Axia 16 LED 500mA	28 Watts	5.00 Metres	Galvanised Steel	
Y	4	STREET LIGHTING	OAK ROAD	HEALING	521894.54	410924.57	1992		54297	1 Urbis LED	Axia 16 LED 500mA	28 Watts	5.00 Metres	Galvanised Steel	
Y	5	STREET LIGHTING	OAK ROAD	HEALING	521914.54	410911.6	1992		54298	1 Urbis LED	Axia 16 LED 500mA	28 Watts	5.00 Metres	Galvanised Steel	
Y	6	STREET LIGHTING	OAK ROAD	HEALING	521941.5	410909.76	1992		54299	1 Urbis LED	Axia 16 LED 500mA	28 Watts	5.00 Metres	Galvanised Steel	
Y	7	STREET LIGHTING	OAK ROAD	HEALING	521963.65	410892.74	1992		54300	1 Urbis LED	Axia 16 LED 500mA	28 Watts	5.00 Metres	Galvanised Steel	
Y	8	STREET LIGHTING	OAK ROAD	HEALING	521993.65	410886.35	1992		54301	1 Urbis LED	Axia 16 LED 500mA	28 Watts	5.00 Metres	Galvanised Steel	
Y	9	STREET LIGHTING	OAK ROAD	HEALING	522021.61	410890.92	1992		54302	1 Urbis LED	Axia 16 LED 500mA	28 Watts	5.00 Metres	Galvanised Steel	
Y	10	STREET LIGHTING	OAK ROAD	HEALING	522046.55	410875.8	1992		54303	1 Urbis LED	Axia 16 LED 500mA	28 Watts	5.00 Metres	Galvanised Steel	

Y	11	STREET LIGHTING	OAK ROAD	HEALING	522077.69	410878.14	1992		54304	1 Urbis LED	Axia 16 LED 500mA	28 Watts	5.00 Metres	Galvanised Steel	
Y	12	STREET LIGHTING	OAK ROAD	HEALING	522098.45	410861.87	1992		54305	1 Urbis LED	Axia 16 LED 500mA	28 Watts	5.00 Metres	Galvanised Steel	
Y	13	STREET LIGHTING	OAK ROAD	HEALING	522124.4	410864.47	1992		54306	1 Urbis LED	Axia 16 LED 500mA	28 Watts	5.00 Metres	Galvanised Steel	
Y	1	STREET LIGHTING	PINFOLD LANE	STALLINGBOROUGH	519756.31	411460.52	2021	20/05/2021	68432	Urbis	Axia 16 LED 350mA	19 Watts	6.00 Metres	Galvanised Steel	
Y	2	STREET LIGHTING	PINFOLD LANE	STALLINGBOROUGH	519718.05	411469.47	1986		55519	Urbis	Axia 16 LED 350mA	19 Watts	5.00 Metres	Galvanised Steel	
Y	3	STREET LIGHTING	PINFOLD LANE	STALLINGBOROUGH	519681.47	411482.44	1986		55520	Urbis	Axia 16 LED 350mA	19 Watts	5.00 Metres	Galvanised Steel	
Y	4	STREET LIGHTING	PINFOLD LANE	STALLINGBOROUGH	519648.05	411494.91	1986		55521	Urbis	Axia 16 LED 350mA	19 Watts	5.00 Metres	Galvanised Steel	
Y	5	STREET LIGHTING	PINFOLD LANE	STALLINGBOROUGH	519672.36	411526.62	1986		55522	Urbis	Axia 16 LED 350mA	19 Watts	5.00 Metres	Galvanised Steel	
Y	6	STREET LIGHTING	PINFOLD LANE	STALLINGBOROUGH	519703.37	411545.97	1986		55523	Urbis	Axia 16 LED 350mA	19 Watts	5.00 Metres	Galvanised Steel	
Y	7	STREET LIGHTING	PINFOLD LANE	STALLINGBOROUGH	519732.73	411562.18	1986		55524	Urbis	Axia 16 LED 350mA	19 Watts	5.00 Metres	Galvanised Steel	
Y	1	STREET LIGHTING	POPLAR ROAD	HEALING	521727.71	410861.39	2003		55540	Urbis	Axia 16 LED 350mA	19 Watts	6.00 Metres	Stainless Steel	
Y	2	STREET LIGHTING	POPLAR ROAD	HEALING	521699.42	410878.29	2003		55541	Urbis	Axia 16 LED 350mA	19 Watts	6.00 Metres	Stainless Steel	
Y	3	STREET LIGHTING	POPLAR ROAD	HEALING	521678.82	410890.86	2003		55542	Urbis	Axia 16 LED 350mA	19 Watts	6.00 Metres	Stainless Steel	
Y	4	STREET LIGHTING	POPLAR ROAD	HEALING	521658.43	410911.23	1999		55543	Urbis	Axia 16 LED 350mA	19 Watts	6.00 Metres	Galvanised Steel	
Y	5	STREET LIGHTING	POPLAR ROAD	HEALING	521626.43	410932.23	2021	18/02/2021	68297	Urbis	Axia 16 LED 350mA	19 Watts	6.00 Metres	Galvanised Steel	
Y	6	STREET LIGHTING	POPLAR ROAD	HEALING	521594.89	410940.72	2014		62707	Urbis	Axia 16 LED 350mA	19 Watts	6.00 Metres	Galvanised Steel	
Y	7	STREET LIGHTING	POPLAR ROAD	HEALING	521572.23	410962.23	2014		62708	Urbis	Axia 16 LED 350mA	19 Watts	6.00 Metres	Galvanised Steel	
Y	8	STREET LIGHTING	POPLAR ROAD	HEALING	521537.68	410970.64	2014		62709	Urbis	Axia 16 LED 350mA	19 Watts	6.00 Metres	Galvanised Steel	
Y	9	STREET LIGHTING	POPLAR ROAD	HEALING	521498.57	410999	2014		62710	Urbis	Axia 16 LED 350mA	19 Watts	6.00 Metres	Galvanised Steel	
Y	10	STREET LIGHTING	POPLAR ROAD	HEALING	521479.33	411008.94	2014		62711	Urbis	Axia 16 LED 350mA	19 Watts	6.00 Metres	Galvanised Steel	
Y	11	STREET LIGHTING	POPLAR ROAD	HEALING	521442.37	411020.77	2014		62712	Urbis	Axia 16 LED 350mA	19 Watts	6.00 Metres	Galvanised Steel	
Y	12	STREET LIGHTING	POPLAR ROAD	HEALING	521420.47	410990.2	2014		62713	Urbis	Axia 16 LED 350mA	19 Watts	6.00 Metres	Galvanised Steel	
Y	13	STREET LIGHTING	POPLAR ROAD	HEALING	521415.91	410960.52	2014		62714	Urbis	Axia 16 LED 350mA	19 Watts	6.00 Metres	Galvanised Steel	
Y	1	STREET LIGHTING	RADCLIFFE ROAD	HEALING	521719.6	410532.16	1998		55863	1 Urbis LED	Axia 16 LED 500mA	28 Watts	6.00 Metres	Galvanised Steel	
Y	2	STREET LIGHTING	RADCLIFFE ROAD	HEALING	521746.01	410516.6	2002		55864	1 Urbis LED	Axia 16 LED 500mA	28 Watts	6.00 Metres	Stainless Steel	
Y	3	STREET LIGHTING	RADCLIFFE ROAD	HEALING	521772.61	410487.06	2002		55865	1 Urbis LED	Axia 16 LED 500mA	28 Watts	6.00 Metres	Stainless Steel	
Y	4	STREET LIGHTING	RADCLIFFE ROAD	HEALING	521803.56	410466.85	2002		55866	1 Urbis LED	Axia 16 LED 500mA	28 Watts	6.00 Metres	Stainless Steel	
Y	5	STREET LIGHTING	RADCLIFFE ROAD	HEALING	521836.89	410456.9	2002		55867	1 Urbis LED	Axia 16 LED 500mA	28 Watts	6.00 Metres	Stainless Steel	
Y	6	STREET LIGHTING	RADCLIFFE ROAD	HEALING	521860.13	410431.32	2002		55868	1 Urbis LED	Axia 16 LED 500mA	28 Watts	6.00 Metres	Stainless Steel	
Y	7	STREET LIGHTING	RADCLIFFE ROAD	HEALING	521894.45	410421.73	2002		55869	1 Urbis LED	Axia 16 LED 500mA	28 Watts	6.00 Metres	Stainless Steel	
Y	8	STREET LIGHTING	RADCLIFFE ROAD	HEALING	521911.13	410399.06	2002		55870	1 Urbis LED	Axia 16 LED 500mA	28 Watts	6.00 Metres	Stainless Steel	
Y	9	STREET LIGHTING	RADCLIFFE ROAD	HEALING	521938.58	410390.3	2002		55871	1 Urbis LED	Axia 16 LED 500mA	28 Watts	6.00 Metres	Stainless Steel	
Y	10	STREET LIGHTING	RADCLIFFE ROAD	HEALING	521966.24	410374.64	2002		55872	1 Urbis LED	Axia 16 LED 500mA	28 Watts	6.00 Metres	Galvanised Steel	
Y	11	STREET LIGHTING	RADCLIFFE ROAD	HEALING	521997.3	410368.02	2002		55873	1 Urbis LED	Axia 16 LED 500mA	28 Watts	6.00 Metres	Stainless Steel	
Y	12	STREET LIGHTING	RADCLIFFE ROAD	HEALING	522019.92	410402.42	2002		55874	1 Urbis LED	Axia 16 LED 500mA	28 Watts	6.00 Metres	Stainless Steel	
Y	13	STREET LIGHTING	RADCLIFFE ROAD	HEALING	522040.49	410432.61	2002		55875	1 Urbis LED	Axia 16 LED 500mA	28 Watts	6.00 Metres	Stainless Steel	
Y	14	STREET LIGHTING	RADCLIFFE ROAD	HEALING	522060.4	410456.07	2002		55876	1 Urbis LED	Axia 16 LED 500mA	28 Watts	6.00 Metres	Galvanised Steel	
Y	15	STREET LIGHTING	RADCLIFFE ROAD	HEALING	522086.53	410477.65	2002		55877	1 Urbis LED	Axia 16 LED 500mA	28 Watts	6.00 Metres	Stainless Steel	
Y	1	STREET LIGHTING	ROOKERY ROAD	HEALING	521441.86	410438.84	2014		62715	1 Urbis LED	Axia 16 LED 500mA	28 Watts	6.00 Metres	Galvanised Steel	
Y	2	STREET LIGHTING	ROOKERY ROAD	HEALING	521427.81	410474.67	2014		62716	1 Urbis LED	Axia 16 LED 500mA	28 Watts	6.00 Metres	Galvanised Steel	
Y	3	STREET LIGHTING	ROOKERY ROAD	HEALING	521435.55	410509.9	2020	15/12/2020	68209	Urbis	Axia 24 LED 500mA	28 Watts	6.00 Metres	Galvanised Steel	
Y	4	STREET LIGHTING	ROOKERY ROAD	HEALING	521404.39	410526.51	2014		62717	1 Urbis LED	Axia 16 LED 500mA	28 Watts	6.00 Metres	Galvanised Steel	
Y	5	STREET LIGHTING	ROOKERY ROAD	HEALING	521399.37	410554.51	2020	15/12/2020	68295	Urbis	Axia 24 LED 500mA	28 Watts	6.00 Metres	Galvanised Steel	
Y	6	STREET LIGHTING	ROOKERY ROAD	HEALING	521366.17	410579.23	2014		62718	1 Urbis LED	Axia 16 LED 500mA	28 Watts	6.00 Metres	Galvanised Steel	
Y	1	STREET LIGHTING	ROWAN DRIVE	HEALING	521633.71	410874.19	2014		62719	Urbis	Axia 16 LED 350mA	19 Watts	6.00 Metres	Galvanised Steel	
Y	2	STREET LIGHTING	ROWAN DRIVE	HEALING	521609.05	410835.64	2014		62720	Urbis	Axia 16 LED 350mA	19 Watts	6.00 Metres	Galvanised Steel	
Y	1	STREET LIGHTING	STALLINGBOROUGH ROAD	HEALING	521600.19	410211.5	1986		58049	1 Urbis LED	Teceo 48 LED 700mA	104 Watts	10.00 Metres	Galvanised Steel	
Y	2	STREET LIGHTING	STALLINGBOROUGH ROAD	HEALING	521583.38	410225.07	1986		58050	1 Urbis LED	Teceo 48 LED 700mA	104 Watts	10.00 Metres	Galvanised Steel	
Y	3	STREET LIGHTING	STALLINGBOROUGH ROAD	HEALING	521557.26	410213.83	1986		58051	1 Urbis LED	Teceo 48 LED 700mA	104 Watts	10.00 Metres	Galvanised Steel	
Y	4	STREET LIGHTING	STALLINGBOROUGH ROAD	HEALING	521534.5	410197.31	1986		58052	1 Urbis LED	Teceo 48 LED 700mA	104 Watts	10.00 Metres	Galvanised Steel	
Y	5	STREET LIGHTING	STALLINGBOROUGH ROAD	HEALING	521505.26	410193.58	1986		58053	1 Urbis LED	Teceo 48 LED 700mA	104 Watts	10.00 Metres	Galvanised Steel	
Y	6	STREET LIGHTING	STALLINGBOROUGH ROAD	HEALING	521468.3	410202.42	1997		58054	1 Urbis LED	Teceo 48 LED 700mA	104 Watts	8.00 Metres	Galvanised Steel	
Y	7	STREET LIGHTING	STALLINGBOROUGH ROAD	HEALING	521434.88	410223.43	1997		58055	1 Urbis LED	Teceo 48 LED 700mA	104 Watts	8.00 Metres	Galvanised Steel	
Y	8	STREET LIGHTING	STALLINGBOROUGH ROAD	HEALING	521398.12	410233.13	1997		58056	1 Urbis LED	Teceo 48 LED 700mA	104 Watts	8.00 Metres	Galvanised Steel	
Y	9	STREET LIGHTING	STALLINGBOROUGH ROAD	HEALING	521364.84	410242	1997		58057	1 Urbis LED	Teceo 48 LED 700mA	104 Watts	8.00 Metres	Galvanised Steel	
Y	10	STREET LIGHTING	STALLINGBOROUGH ROAD	HEALING	521331.22	410249.92	1997		58058	1 Urbis LED	Teceo 48 LED 700mA	104 Watts	8.00 Metres	Galvanised Steel	
Y	11	STREET LIGHTING	STALLINGBOROUGH ROAD	HEALING	521297.29	410258.12	1997		58059	1 Urbis LED	Teceo 48 LED 700mA	104 Watts	8.00 Metres	Galvanised Steel	
Y	12	STREET LIGHTING	STALLINGBOROUGH ROAD	HEALING	521255.88	410269.24	1997		58060	1 Urbis LED	Teceo 48 LED 700mA	104 Watts	8.00 Metres	Galvanised Steel	
Y	13	STREET LIGHTING	STALLINGBOROUGH ROAD	HEALING	521227.88	410279.87	1997		58061	1 Urbis LED	Teceo 48 LED 700mA	104 Watts	8.00 Metres	Galvanised Steel	
Y	14	STREET LIGHTING	STALLINGBOROUGH ROAD	HEALING	521197.9	410291.52	1997		58062	1 Urbis LED	Teceo 48 LED 700mA	104 Watts	8.00 Metres	Galvanised Steel	
Y	15	STREET LIGHTING	STALLINGBOROUGH ROAD	HEALING	521156.86	410295.87	1997		58063	1 Urbis LED	Teceo 48 LED 700mA	104 Watts	8.00 Metres	Galvanised Steel	
Y	16	STREET LIGHTING	STALLINGBOROUGH ROAD	HEALING	521125.87	410318.98	1997		58064	1 Urbis LED	Teceo 48 LED 700mA	104 Watts	8.00 Metres	Galvanised Steel	
Y	17	STREET LIGHTING	STALLINGBOROUGH ROAD	HEALING	521105.01	410327.28	1997		58065	1 Urbis LED	Teceo 48 LED 700mA	104 Watts	8.00 Metres	Galvanised Steel	
Y	18	STREET LIGHTING	STALLINGBOROUGH ROAD	HEALING	521073.74	410339.64	1998		58066	1 Urbis LED	Teceo 48 LED 700mA	104 Watts	8.00 Metres	Galvanised Steel	
Y	19	STREET LIGHTING	STALLINGBOROUGH ROAD	HEALING	521044.37	410355.53	1997		58067	1 Urbis LED	Teceo 48 LED 700mA	104 Watts	8.00 Metres	Galvanised Steel	
Y	20	STREET LIGHTING	STALLINGBOROUGH ROAD	HEALING	521009.86	410366.57	2005		58068	1 Urbis LED	Teceo 48 LED 700mA	104 Watts	8.00 Metres	Stainless Steel	
Y	21	STREET LIGHTING	STALLINGBOROUGH ROAD	HEALING	520993.3	410405.45	1997		58069	1 Urbis LED	Teceo 48 LED 700mA	104 Watts	8.00 Metres	Galvanised Steel	
Y	22	STREET LIGHTING	STALLINGBOROUGH ROAD	HEALING	520976.59	410427.79	2007		58070	1 Urbis LED	Teceo 48 LED 700mA	104 Watts	8.00 Metres	Galvanised Steel	
Y	23	STREET LIGHTING	STALLINGBOROUGH ROAD	HEALING	520941.4	410450.2	2004		58071	1 Urbis LED	Teceo 48 LED 700mA	104 Watts	8.00 Metres	Stainless Steel	
Y	24	STREET LIGHTING	STALLINGBOROUGH ROAD	HEALING	520952.54	410459.18	1997		58072	1 Urbis LED	Teceo 48 LED 700mA	104 Watts	8.00 Metres	Galvanised Steel	
Y	25	STREET LIGHTING	STALLINGBOROUGH ROAD	HEALING	520925.2	410470.77	1997		58073	1 Urbis LED	Teceo 48 LED 700mA	104 Watts	8.00 Metres	Galvanised Steel	
Y	26	STREET LIGHTING	STALLINGBOROUGH ROAD	HEALING	520916.09	410482.92	1997		58074	1 Urbis LED	Teceo 48 LED 700mA	104 Watts	8.00 Metres	Galvanised Steel	
Y	27	STREET LIGHTING	STALLINGBOROUGH ROAD	HEALING	520928.83	410491.26	1997		58075	1 Urbis LED	Teceo 48 LED 700mA	104 Watts	8.00 Metres	Galvanised Steel	
Y	28	STREET LIGHTING	STALLINGBOROUGH ROAD	HEALING	520901.15	410506.91	2004		66413	1 Urbis LED	Teceo 48 LED 700mA	104 Watts	8.00 Metres	Stainless Steel	
Y	29	STREET LIGHTING	STALLINGBOROUGH ROAD	HEALING	520911.87	410513.48	1997		58076	1 Urbis LED	Teceo 48 LED 700mA	104 Watts	8.00 Metres	Galvanised Steel	
Y	30	STREET LIGHTING	STALLINGBOROUGH ROAD	HEALING	520891.24	410540.38	1997		58077	1 Urbis LED	Teceo 48 LED 700mA	104 Watts	8.00 Metres	Galvanised Steel	
Y	31	STREET LIGHTING	STALLINGBOROUGH ROAD	HEALING	520868.2	410570.82	1997		58078	1 Urbis LED	Teceo 48 LED 700mA	104 Watts	8.00 Metres	Galvanised Steel	
Y	32	STREET LIGHTING	STALLINGBOROUGH ROAD	HEALING	520848.15	410598.14	1997		58079	1 Urbis LED	Teceo 48 LED 700mA	104 Watts	8.00 Metres	Galvanised Steel	
Y	33	STREET LIGHTING	STALLINGBOROUGH ROAD	HEALING	520826.26	410627.63	1997		58080	1 Urbis LED	Teceo 48 LED 700mA	104 Watts	8.00 Metres	Galvanised Steel	
Y	34	STREET LIGHTING	STALLINGBOROUGH ROAD	HEALING	520815.05	410646.13	2010		66412	1 Urbis LED	Teceo 48 LED 700mA	104 Watts	8.00 Metres	Galvanised Steel	
Y	35	STREET LIGHTING	STALLINGBOROUGH ROAD	HEALING	520801.2	410663.84	2010		66411	1 Urbis LED	Teceo 48 LED 700mA	104 Watts	8.00 Metres	Galvanised Steel	
Y	36	STREET LIGHTING	STALLINGBOROUGH ROAD	HEALING	520786.13	410682.38	1997		58082	1 Urbis LED	Teceo 48 LED 700mA	104 Watts	8.00 Metres	Galvanised Steel	
Y	37	STREET LIGHTING	STALLINGBOROUGH ROAD	HEALING	520762.21	410711.68	2018	30/09/2018	58083	1 Urbis LED	Teceo 48 LED 700mA	104 Watts	8.00 Metres	Galvanised Steel	
Y	38	STREET LIGHTING	STALLINGBOROUGH ROAD	HEALING	520742.08	410736.52	1997		58084	1 Urbis LED	Teceo 48 LED 700mA	104 Watts	8.00 Metres	Galvanised Steel	
Y	39	STREET LIGHTING	STALLINGBOROUGH ROAD	HEALING	520709.48	410759.18	1997		58085	1 Urbis LED	Teceo 48 LED 700mA	104 Watts	8.00 Metres	Galvanised Steel	
Y	40	STREET LIGHTING	STALLINGBOROUGH ROAD	HEALING	520684.82	410785.76	1997		58086	1 Urbis LED	Teceo 48 LED 700mA	104 Watts	8.00 Metres	Galvanised Steel	
Y	1	STREET LIGHTING	STATION ROAD	HEALING	521476.13	410447.14	2009		58260	1 Urbis LED	Axia 16 LED 500mA	28 Watts	6.00 Metres	Steel	
Y	2	STREET LIGHTING	STATION ROAD	HEALING	521503.02	410473.73	2009		58261	1 Urbis LED	Axia 16 LED 500mA	28 Watts	6.00 Metres	Steel	
Y	3	STREET LIGHTING	STATION ROAD	HEALING	521514.31	410507.16	2009		58262	1 Urbis LED	Axia 16 LED 500mA	28 Watts	6.00 Metres	Steel	
Y	4	STREET LIGHTING	STATION ROAD	HEALING	521539.86	410530.93	2009		58263	1 Urbis LED	Axia 16 LED 500mA	28 Watts	6.00 Metres	Steel	
Y	5	STREET LIGHTING	STATION ROAD	HEALING	521551.15	410564.89	2009		58264	1 Urbis LED	Axia 16 LED 500mA	28 Watts	6.00 Metres	Steel	
Y	6	STREET LIGHTING	STATION ROAD	HEALING	521571.95	410581.58	2009		58265	1 Urbis LED	Axia 16 LED 500mA	28 Watts	6.00 Metres	Steel	
Y	7	STREET LIGHTING	STATION ROAD	HEALING	521583.83	410599.85	2009		58266	1 Urbis LED	Axia 16 LED 500mA	28 Watts	6.00 Metres	Steel	
Y	8	STREET LIGHTING	STATION ROAD	HEALING	521591.71	410628.23	2009		58267	1 Urbis LED	Axia 16 LED 500mA	28 Watts	6.00 Metres	Steel	
Y	9	STREET LIGHTING	STATION ROAD	HEALING	521616.51	410651.25	2009		58268	1 Urbis LED	Axia 16 LED 500mA	28 Watts	6.00 Metres	Steel	
Y	10	STREET LIGHTING	STATION ROAD	HEALING	521633.6	410677.4	2009		58269	1 Urbis LED	Axia 16 LED 500mA	28 Watts	6.00 Metres	Steel	
Y	11	STREET LIGHTING	STATION ROAD	HEALING	521643.1	410708.74	2009		58270	1 Urbis LED	Axia 16 LED 500mA	28 Watts	6.00 Metres	Steel	
Y	12	STREET LIGHTING	STATION ROAD	HEALING	521668.06	410732.07	2009		58271	1 Urbis LED	Axia 16 LED 500mA	28 Watts	6.00 Metres	Steel	
Y	13	STREET LIGHTING	STATION ROAD	HEALING	521678.31	410764.3	2009		58272	1 Urbis LED	Axia 16 LED 500mA	28 Watts	6.00 Metres	Steel	
Y	14	STREET LIGHTING	STATION ROAD	HEALING	521694.88	410790.14	2009		58273	1 Urbis LED	Axia 16 LED 500mA	28 Watts	6.00 Metres	Steel	
Y	15	STREET LIGHTING	STATION ROAD	HEALING	521710.46	410814.65	2009		58274	1 Urbis LED	Axia 16 LED 500mA	28 Watts	6.00 Metres	Steel	
Y	16	STREET LIGHTING	STATION ROAD	HEALING	521730.94	410830.92	2009		58275	1 Urbis LED	Axia 16 LED 500mA	28 Watts	6.00 Metres	Steel	
Y	17	STREET LIGHTING	STATION ROAD	HEALING	521745.16	410852.25	2009		58276	1 Urbis LED	Axia 16 LED 500mA	28 Watts	6.00 Metres	Steel	
Y	18	STREET LIGHTING	STATION ROAD	HEALING	521753.33	410881.96	2009		58277	1 Urbis LED	Axia 16 LED 500mA	28 Watts	6.00 Metres	Steel	
Y	19	STREET LIGHTING	STATION ROAD	HEALING	521780.83	410908.64	2009		58278	1 Urbis LED	Axia 16 LED 500mA	28 Watts	6.00 Metres	Steel	
Y	20	STREET LIGHTING	STATION ROAD	HEALING	521789.4	410939.1	2009		58279	1 Urbis LED	Axia 16 LED 500mA	28 Watts	6.00 Metres	Steel	
Y	21	STREET LIGHTING	STATION ROAD	HEALING	521810.58	410956.08	2009		58280	1 Urbis LED	Axia 16 LED 500mA	28 Watts	6.00 Metres	Steel	
Y	22	STREET LIGHTING	STATION ROAD	HEALING	521815.43	410980.45	2009		58281	1 Urbis LED	Axia 16 LED 500mA	28 Watts	6.00 Metres	Steel	
Y	23	STREET LIGHTING	STATION ROAD	HEALING	521831.32	411004.71	2009		58282	1 Urbis LED	Axia 16 LED 500mA	28 Watts	6.00 Metres	Steel	
Y	1	STREET LIGHTING	STATION ROAD	STALLINGBOROUGH	519532.5	411386.12	2017		58316	1 Urbis LED	Teceo 48 LED 700mA	104 Watts	10.00 Metres	Galvanised Steel	

Y	2	STREET LIGHTING	STATION ROAD	STALLINGBOROUGH	519563.75	411380.75	2017		58317	1 Urbis LED	Teceo 48 LED 700mA	104 Watts	10.00 Metres	Galvanised Steel	
Y	3	STREET LIGHTING	STATION ROAD	STALLINGBOROUGH	519581.57	411397.15	2015		58318	1 Urbis LED	Teceo 48 LED 700mA	104 Watts	10.00 Metres	Galvanised Steel	
Y	4	STREET LIGHTING	STATION ROAD	STALLINGBOROUGH	519619.24	411391.18	2017		58319	1 Urbis LED	Teceo 48 LED 700mA	104 Watts	10.00 Metres	Galvanised Steel	
Y	5	STREET LIGHTING	STATION ROAD	STALLINGBOROUGH	519652.48	411374.31	2021	26/02/2021	68282	Urbis	Teceo 48 LED 700mA	104 Watts	6.00 Metres	Steel	
Y	6	STREET LIGHTING	STATION ROAD	STALLINGBOROUGH	519693.97	411368.75	2021	26/02/2021	68283	Urbis	Teceo 48 LED 700mA	104 Watts	6.00 Metres	Steel	
Y	7	STREET LIGHTING	STATION ROAD	STALLINGBOROUGH	519732	411384	2009		58322	1 Urbis LED	Teceo 48 LED 700mA	104 Watts	8.00 Metres	Steel	
Y	8	STREET LIGHTING	STATION ROAD	STALLINGBOROUGH	519768.61	411376.42	2021	12/02/2021	68284	Urbis	Teceo 48 LED 700mA	104 Watts	12.00 Metres	Galvanised Steel	
Y	9	STREET LIGHTING	STATION ROAD	STALLINGBOROUGH	519804.29	411388.1	1983		58324	Urbis	AXIA 3.3 48 LED 540mA	78 Watts	10.00 Metres	Galvanised Steel	
Y	10	STREET LIGHTING	STATION ROAD	STALLINGBOROUGH	519838.4	411393.51	1955		58325	1 Urbis LED	Teceo 48 LED 700mA	104 Watts	10.00 Metres	Concrete	
Y	11	STREET LIGHTING	STATION ROAD	STALLINGBOROUGH	519876.68	411407.26	1989		58326	1 Urbis LED	Teceo 48 LED 700mA	104 Watts	10.00 Metres	Galvanised Steel	
Y	12	STREET LIGHTING	STATION ROAD	STALLINGBOROUGH	519907.14	411396.32	1989		58327	1 Urbis LED	Teceo 48 LED 700mA	104 Watts	10.00 Metres	Galvanised Steel	
Y	13	STREET LIGHTING	STATION ROAD	STALLINGBOROUGH	519951.51	411402.31	1989		58328	1 Urbis LED	Teceo 48 LED 700mA	104 Watts	10.00 Metres	Galvanised Steel	
Y	14	STREET LIGHTING	STATION ROAD	STALLINGBOROUGH	519985.72	411406.4	1989		58329	1 Urbis LED	Teceo 48 LED 700mA	104 Watts	10.00 Metres	Galvanised Steel	
Y	15	STREET LIGHTING	STATION ROAD	STALLINGBOROUGH	520023.02	411430.31	1989		58330	1 Urbis LED	Teceo 48 LED 700mA	104 Watts	10.00 Metres	Galvanised Steel	
Y	16	STREET LIGHTING	STATION ROAD	STALLINGBOROUGH	520052.11	411425.15	1989		58331	1 Urbis LED	Teceo 48 LED 700mA	104 Watts	10.00 Metres	Galvanised Steel	
Y	17	STREET LIGHTING	STATION ROAD	STALLINGBOROUGH	520085.23	411447.09	1989		58332	1 Urbis LED	Teceo 48 LED 700mA	104 Watts	10.00 Metres	Galvanised Steel	
Y	18	STREET LIGHTING	STATION ROAD	STALLINGBOROUGH	520123.97	411448.81	1989		58333	1 Urbis LED	Teceo 48 LED 700mA	104 Watts	10.00 Metres	Galvanised Steel	
Y	19	STREET LIGHTING	STATION ROAD	STALLINGBOROUGH	520158.26	411469.82	1989		58334	1 Urbis LED	Teceo 48 LED 700mA	104 Watts	10.00 Metres	Galvanised Steel	
Y	20	STREET LIGHTING	STATION ROAD	STALLINGBOROUGH	520196.84	411471.62	1989		58335	1 Urbis LED	Teceo 48 LED 700mA	104 Watts	10.00 Metres	Galvanised Steel	
Y	21	STREET LIGHTING	STATION ROAD	STALLINGBOROUGH	520230.58	411493.72	1989		58336	1 Urbis LED	Teceo 48 LED 700mA	104 Watts	10.00 Metres	Galvanised Steel	
Y	22	STREET LIGHTING	STATION ROAD	STALLINGBOROUGH	520253.47	411515.52	1989		58337	1 Urbis LED	Teceo 48 LED 700mA	104 Watts	10.00 Metres	Galvanised Steel	
Y	23	STREET LIGHTING	STATION ROAD	STALLINGBOROUGH	520271.28	411550.04	1989		58338	1 Urbis LED	Teceo 48 LED 700mA	104 Watts	10.00 Metres	Galvanised Steel	
Y	24	STREET LIGHTING	STATION ROAD	STALLINGBOROUGH	520299.79	411568.71	1989		58339	1 Urbis LED	Teceo 48 LED 700mA	104 Watts	10.00 Metres	Galvanised Steel	
Y	25	STREET LIGHTING	STATION ROAD	STALLINGBOROUGH	520311.97	411599.57	1989		58340	Urbis	Teceo 48 LED 700mA	104 Watts	10.00 Metres	Galvanised Steel	
Y	26	STREET LIGHTING	STATION ROAD	STALLINGBOROUGH	520339.31	411628.93	1989		58341	1 Urbis LED	Teceo 48 LED 700mA	104 Watts	10.00 Metres	Galvanised Steel	
Y	27	STREET LIGHTING	STATION ROAD	STALLINGBOROUGH	520361.08	411650.39	1989		58342	1 Urbis LED	Teceo 48 LED 700mA	104 Watts	10.00 Metres	Galvanised Steel	
Y	28	STREET LIGHTING	STATION ROAD	STALLINGBOROUGH	520386.02	411673.61	1989		58343	1 Urbis LED	Teceo 48 LED 700mA	104 Watts	10.00 Metres	Galvanised Steel	
Y	29	STREET LIGHTING	STATION ROAD	STALLINGBOROUGH	520419.53	411688.93	1989		58344	1 Urbis LED	Teceo 48 LED 700mA	104 Watts	10.00 Metres	Galvanised Steel	
Y	30	STREET LIGHTING	STATION ROAD	STALLINGBOROUGH	520441.81	411723.87	1989		58345	1 Urbis LED	Teceo 48 LED 700mA	104 Watts	10.00 Metres	Galvanised Steel	
Y	31	STREET LIGHTING	STATION ROAD	STALLINGBOROUGH	520476.88	411739.63	1989		58346	1 Urbis LED	Teceo 48 LED 700mA	104 Watts	10.00 Metres	Galvanised Steel	
Y	32	STREET LIGHTING	STATION ROAD	STALLINGBOROUGH	520497.26	411772.52	1989		58347	Urbis	AXIA 3.3 48 LED 540mA	78 Watts	10.00 Metres	Galvanised Steel	
Y	33	STREET LIGHTING	STATION ROAD	STALLINGBOROUGH	520529.66	411786.18	1989		58348	1 Urbis LED	Teceo 48 LED 700mA	104 Watts	10.00 Metres	Galvanised Steel	
Y	34	STREET LIGHTING	STATION ROAD	STALLINGBOROUGH	520548.14	411822.66	1989		58349	1 Urbis LED	Teceo 48 LED 700mA	104 Watts	10.00 Metres	Galvanised Steel	
Y	35	STREET LIGHTING	STATION ROAD	STALLINGBOROUGH	520588.77	411846.27	1989		58350	1 Urbis LED	Teceo 48 LED 700mA	104 Watts	10.00 Metres	Galvanised Steel	
Y	36	STREET LIGHTING	STATION ROAD	STALLINGBOROUGH	520607.61	411878.01	1989		58351	1 Urbis LED	Teceo 48 LED 700mA	104 Watts	10.00 Metres	Galvanised Steel	
Y	37	STREET LIGHTING	STATION ROAD	STALLINGBOROUGH	520635.97	411886.41	1989		58352	1 Urbis LED	Teceo 48 LED 700mA	104 Watts	10.00 Metres	Galvanised Steel	
Y	38	STREET LIGHTING	STATION ROAD	STALLINGBOROUGH	520677.31	411916.83	2007		58353	1 Urbis LED	Teceo 48 LED 700mA	104 Watts	10.00 Metres	Galvanised Steel	
Y	39	STREET LIGHTING	STATION ROAD	STALLINGBOROUGH	520694.55	411935.88	1989		58354	1 Urbis LED	Teceo 48 LED 700mA	104 Watts	10.00 Metres	Galvanised Steel	
Y	40	STREET LIGHTING	STATION ROAD	STALLINGBOROUGH	520721.38	411967.59	1989		58355	1 Urbis LED	Teceo 48 LED 700mA	104 Watts	10.00 Metres	Galvanised Steel	
Y	1	STREET LIGHTING	SWALLOW DRIVE	HEALING	521374.4	410553.6	2014		62721	Urbis	Axia 16 LED 350mA	19 Watts	6.00 Metres	Galvanised Steel	
Y	2	STREET LIGHTING	SWALLOW DRIVE	HEALING	521345.41	410529.74	2014		62722	Urbis	Axia 16 LED 350mA	19 Watts	6.00 Metres	Galvanised Steel	
Y	3	STREET LIGHTING	SWALLOW DRIVE	HEALING	521324.65	410513.28	2014		62723	Urbis	Axia 16 LED 350mA	19 Watts	6.00 Metres	Galvanised Steel	
Y	4	STREET LIGHTING	SWALLOW DRIVE	HEALING	521304.53	410518.41	2014		62724	Urbis	Axia 16 LED 350mA	19 Watts	6.00 Metres	Galvanised Steel	
Y	5	STREET LIGHTING	SWALLOW DRIVE	HEALING	521283.01	410518.6	2014		62725	Urbis	Axia 16 LED 350mA	19 Watts	6.00 Metres	Galvanised Steel	
Y	1	STREET LIGHTING	THE AVENUE	HEALING	521560.05	410322.93	1992		58911	1 Urbis LED	Axia 16 LED 500mA	28 Watts	6.00 Metres	Galvanised Steel	
Y	2	STREET LIGHTING	THE AVENUE	HEALING	521585.62	410345.02	1992		58912	1 Urbis LED	Axia 16 LED 500mA	28 Watts	6.00 Metres	Galvanised Steel	
Y	3	STREET LIGHTING	THE AVENUE	HEALING	521593.85	410372.36	1992		58913	1 Urbis LED	Axia 16 LED 500mA	28 Watts	6.00 Metres	Galvanised Steel	
Y	4	STREET LIGHTING	THE AVENUE	HEALING	521617.27	410395.08	1992		58914	1 Urbis LED	Axia 16 LED 500mA	28 Watts	6.00 Metres	Galvanised Steel	
Y	5	STREET LIGHTING	THE AVENUE	HEALING	521633.09	410419.32	1992		58915	1 Urbis LED	Axia 16 LED 500mA	28 Watts	6.00 Metres	Galvanised Steel	
Y	6	STREET LIGHTING	THE AVENUE	HEALING	521641.44	410447.83	1992		58916	1 Urbis LED	Axia 16 LED 500mA	28 Watts	6.00 Metres	Galvanised Steel	
Y	7	STREET LIGHTING	THE AVENUE	HEALING	521655.87	410470.74	1992		58917	1 Urbis LED	Axia 16 LED 500mA	28 Watts	6.00 Metres	Galvanised Steel	
Y	8	STREET LIGHTING	THE AVENUE	HEALING	521674.99	410485.36	1992		58918	1 Urbis LED	Axia 16 LED 500mA	28 Watts	6.00 Metres	Galvanised Steel	
Y	9	STREET LIGHTING	THE AVENUE	HEALING	521689.42	410507.95	1992		58919	1 Urbis LED	Axia 16 LED 500mA	28 Watts	6.00 Metres	Galvanised Steel	
Y	10	STREET LIGHTING	THE AVENUE	HEALING	521696.63	410536.12	1992		58920	1 Urbis LED	Axia 16 LED 500mA	28 Watts	6.00 Metres	Galvanised Steel	
Y	11	STREET LIGHTING	THE AVENUE	HEALING	521710.94	410559.22	1992		58921	1 Urbis LED	Axia 16 LED 500mA	28 Watts	6.00 Metres	Galvanised Steel	
Y	12	STREET LIGHTING	THE AVENUE	HEALING	521725.37	410582.32	1992		58922	1 Urbis LED	Axia 16 LED 500mA	28 Watts	6.00 Metres	Galvanised Steel	
Y	13	STREET LIGHTING	THE AVENUE	HEALING	521747.9	410600.86	1992		58923	1 Urbis LED	Axia 16 LED 500mA	28 Watts	6.00 Metres	Galvanised Steel	
Y	14	STREET LIGHTING	THE AVENUE	HEALING	521753.93	410627.63	1992		58924	1 Urbis LED	Axia 16 LED 500mA	28 Watts	6.00 Metres	Galvanised Steel	
Y	15	STREET LIGHTING	THE AVENUE	HEALING	521779.5	410649.46	1992		58925	1 Urbis LED	Axia 16 LED 500mA	28 Watts	6.00 Metres	Galvanised Steel	
Y	16	STREET LIGHTING	THE AVENUE	HEALING	521780.76	410669.65	1992		58926	1 Urbis LED	Axia 16 LED 500mA	28 Watts	6.00 Metres	Galvanised Steel	
Y	17	STREET LIGHTING	THE AVENUE	HEALING	521795.95	410693.7	1992		58927	1 Urbis LED	Axia 16 LED 500mA	28 Watts	6.00 Metres	Galvanised Steel	
Y	18	STREET LIGHTING	THE AVENUE	HEALING	521817.98	410711.11	1992		58928	1 Urbis LED	Axia 16 LED 500mA	28 Watts	6.00 Metres	Galvanised Steel	
Y	19	STREET LIGHTING	THE AVENUE	HEALING	521834.05	410736.62	1992		58929	1 Urbis LED	Axia 16 LED 500mA	28 Watts	6.00 Metres	Galvanised Steel	
Y	20	STREET LIGHTING	THE AVENUE	HEALING	521836.84	410758.45	1992		58930	1 Urbis LED	Axia 16 LED 500mA	28 Watts	6.00 Metres	Galvanised Steel	
Y	21	STREET LIGHTING	THE AVENUE	HEALING	521861.22	410780.59	1992		58931	1 Urbis LED	Axia 16 LED 500mA	28 Watts	6.00 Metres	Galvanised Steel	
Y	22	STREET LIGHTING	THE AVENUE	HEALING	521867.68	410807.62	1992		58932	1 Urbis LED	Axia 16 LED 500mA	28 Watts	6.00 Metres	Galvanised Steel	
Y	23	STREET LIGHTING	THE AVENUE	HEALING	521882.36	410830.4	1992		58933	1 Urbis LED	Axia 16 LED 500mA	28 Watts	6.00 Metres	Galvanised Steel	
Y	24	STREET LIGHTING	THE AVENUE	HEALING	521896.66	410853.38	1992		58934	1 Urbis LED	Axia 16 LED 500mA	28 Watts	6.00 Metres	Galvanised Steel	
Y	25	STREET LIGHTING	THE AVENUE	HEALING	521912.36	410878.63	1992		58935	1 Urbis LED	Axia 16 LED 500mA	28 Watts	6.00 Metres	Galvanised Steel	
Y	26	STREET LIGHTING	THE AVENUE	HEALING	521930.59	410891.86	1992		58936	1 Urbis LED	Axia 16 LED 500mA	28 Watts	6.00 Metres	Galvanised Steel	
Y	1	STREET LIGHTING	THE LIMES	STALLINGBOROUGH	519951.59	411434.73	2013		62741	Urbis	Axia 16 LED 350mA	19 Watts	6.00 Metres	Galvanised Steel	
Y	2	STREET LIGHTING	THE LIMES	STALLINGBOROUGH	519941.87	411470.47	2014	31/03/2014	59003	Urbis	Axia 16 LED 350mA	19 Watts	6.00 Metres	Steel	
Y	3	STREET LIGHTING	THE LIMES	STALLINGBOROUGH	519919.79	411497.11	2014	31/03/2014	59004	Urbis	Axia 16 LED 350mA	19 Watts	6.00 Metres	Steel	
Y	1	STREET LIGHTING	THE WOODLANDS	STALLINGBOROUGH	519790.34	411502.87	1992		59054	Urbis	Axia 16 LED 350mA	19 Watts	5.00 Metres	Steel	
Y	2	STREET LIGHTING	THE WOODLANDS	STALLINGBOROUGH	519817.44	411510.06	1992		59055	Urbis	Axia 16 LED 350mA	19 Watts	5.00 Metres	Steel	
Y	3	STREET LIGHTING	THE WOODLANDS	STALLINGBOROUGH	519818.69	411532.92	1992		59056	Urbis	Axia 16 LED 350mA	19 Watts	5.00 Metres	Steel	
Y	4	STREET LIGHTING	THE WOODLANDS	STALLINGBOROUGH	519843.77	411550.46	1992		59057	Urbis	Axia 16 LED 350mA	19 Watts	5.00 Metres	Steel	
Y	5	STREET LIGHTING	THE WOODLANDS	STALLINGBOROUGH	519855.11	411573.45	1992		59058	Urbis	Axia 16 LED 350mA	19 Watts	5.00 Metres	Steel	
Y	6	STREET LIGHTING	THE WOODLANDS	STALLINGBOROUGH	519879.21	411585.5	1992		59059	Urbis	Axia 16 LED 350mA	19 Watts	5.00 Metres	Steel	
Y	7	STREET LIGHTING	THE WOODLANDS	STALLINGBOROUGH	519869.09	411605.35	1992		59060	Urbis	Axia 16 LED 350mA	19 Watts	5.00 Metres	Steel	
Y	1	STREET LIGHTING	WESTWOOD ROAD	HEALING	521505.71	410973.53	2014		62726	1 Urbis LED	Axia 16 LED 500mA	28 Watts	6.00 Metres	Galvanised Steel	
Y	2	STREET LIGHTING	WESTWOOD ROAD	HEALING	521481.15	410946.25	2014		62727	1 Urbis LED	Axia 16 LED 500mA	28 Watts	6.00 Metres	Galvanised Steel	
Y	3	STREET LIGHTING	WESTWOOD ROAD	HEALING	521456.34	410904.42	2014		62728	1 Urbis LED	Axia 16 LED 500mA	28 Watts	6.00 Metres	Galvanised Steel	
Y	1	STREET LIGHTING	WOODAPPLE COURT	STALLINGBOROUGH	520297.05	411694.72	1993		61096	Urbis	Axia 16 LED 350mA	19 Watts	5.00 Metres	Galvanised Steel	
Y	2	STREET LIGHTING	WOODAPPLE COURT	STALLINGBOROUGH	520281.23	411671.75	1993		61097	Urbis	Axia 16 LED 350mA	19 Watts	5.00 Metres	Galvanised Steel	
Y	1	STREET LIGHTING	WREN CLOSE	HEALING	521319.41	410562.44	2014		62729	1 Urbis LED	Axia 16 LED 500mA	28 Watts	6.00 Metres	Galvanised Steel	
Y	1	STREET LIGHTING	ASHLEIGH COURT	HEALING	521858.82	411015.33	2021	18/02/2021	68309	Urbis	Axia 16 LED 350mA	19 Watts	6.00 Metres	Galvanised Steel	
Y	2	STREET LIGHTING	ASHLEIGH COURT	HEALING	521881.5	410997.23	1992		43424	Urbis	Axia 16 LED 350mA	19 Watts	5.00 Metres	Galvanised Steel	
Y	3	STREET LIGHTING	ASHLEIGH COURT	HEALING	521913.14	410996.78	1992		43425	Urbis	Axia 16 LED 350mA	19 Watts	5.00 Metres	Galvanised Steel	
Y	4	STREET LIGHTING	ASHLEIGH COURT	HEALING	521938.46	410980.14	1992		43426	Urbis	Axia 16 LED 350mA	19 Watts	5.00 Metres	Galvanised Steel	
Y	5	STREET LIGHTING	ASHLEIGH COURT	HEALING	521967.7	410979.95	1993		43427	Urbis	Axia 16 LED 350mA	19 Watts	5.00 Metres	Galvanised Steel	
Y	6	STREET LIGHTING	ASHLEIGH COURT	HEALING	521989.98	410968.5	1993		43428	Urbis	Axia 16 LED 350mA	19 Watts	5.00 Metres	Galvanised Steel	
Y	7	STREET LIGHTING	ASHLEIGH COURT	HEALING	521995.55	410982.61	1993		43429	Urbis	Axia 16 LED 350mA	19 Watts	5.00 Metres	Galvanised Steel	
Y	8	STREET LIGHTING	ASHLEIGH COURT	HEALING	522015.04	410978.62	1993		43430	Urbis	Axia 16 LED 350mA	19 Watts	5.00 Metres	Galvanised Steel	
Y	9	STREET LIGHTING	ASHLEIGH COURT	HEALING	522033.78	410970.08	1993		43431	Urbis	Axia 16 LED 350mA	19 Watts	5.00 Metres	Galvanised Steel	
Y	10	STREET LIGHTING	ASHLEIGH COURT	HEALING	522048.08	410963.18	1993		43432	Urbis	Axia 16 LED 350mA	19 Watts	5.00 Metres	Galvanised Steel	
Y	1	STREET LIGHTING	AYSCOUGH AVENUE	STALLINGBOROUGH	520292.09	411525.66	1986		43554	Urbis	Axia 16 LED 350mA	19 Watts	5.00 Metres	Galvanised Steel	
Y	2	STREET LIGHTING	AYSCOUGH AVENUE	STALLINGBOROUGH	520321.33	411508.01	1960		43555	Urbis	Axia 16 LED 350mA	19 Watts	5.00 Metres	Galvanised Steel	
Y	3	STREET LIGHTING	AYSCOUGH AVENUE	STALLINGBOROUGH	520343.61	411474.53	1960		43556	Urbis	Axia 16 LED 350mA	19 Watts	5.00 Metres	Galvanised Steel	
Y	4	STREET LIGHTING	AYSCOUGH AVENUE	STALLINGBOROUGH	520366.02	411483.33	1960		43557	Urbis	Axia 16 LED 350mA	19 Watts	5.00 Metres	Galvanised Steel	
Y	5	STREET LIGHTING	AYSCOUGH AVENUE	STALLINGBOROUGH	520382.35	411503.77	1986		43558	Urbis	Axia 16 LED 350mA	19 Watts	5.00 Metres	Galvanised Steel	
Y	6	STREET LIGHTING	AYSCOUGH AVENUE	STALLINGBOROUGH	520324.45	411442.25	1986		43559	Urbis	Axia 16 LED 350mA	19 Watts	5.00 Metres	Galvanised Steel	
Y	7	STREET LIGHTING	AYSCOUGH AVENUE	STALLINGBOROUGH	520303.59	411425.04	1960		43560	Urbis	Axia 16 LED 350mA	19 Watts	5.00 Metres	Galvanised Steel	
Y	1	STREET LIGHTING	BRIAR LANE	HEALING	521427.2	410632.16	1998		44687	1 Urbis LED	Axia 16 LED 500mA	28 Watts	5.00 Metres	Galvanised Steel	
Y	1	STREET LIGHTING	CHESTNUT WALK	HEALING	522305.61	410474.88	2014		62682	Urbis	Axia 16 LED 350mA	19 Watts	6.00 Metres	Galvanised Steel	
Y	2	STREET LIGHTING	CHESTNUT WALK	HEALING	522342.95	410480.26	2014		62683	Urbis	Axia 16 LED 350mA	19 Watts	6.00 Metres	Galvanised Steel	
Y	3	STREET LIGHTING	CHESTNUT WALK	HEALING	522355.23	410507.92	2014		62684	Urbis	Axia 16 LED 350mA	19 Watts	6.00 Metres	Galvanised Steel	
Y	4	STREET LIGHTING	CHESTNUT WALK	HEALING	522385.1	410519.63	2014		62685	Urbis	Axia 16 LED 350mA	19 Watts	6.00 Metres	Galvanised Steel	
Y	1	STREET LIGHTING	ELM GROVE	HEALING	522100.35	410369.02	2014		62688	1 Urbis LED	Axia 16 LED 500mA	28 Watts	6.00 Metres	Galvanised Steel	
Y	1	STREET LIGHTING	HEALING ROAD	STALLINGBOROUGH	519832.99	411373.09	1998		50445	Urbis	Axia 16 LED 350mA	19 Watts	6.00 Metres	Steel	

Y	2	STREET LIGHTING	HEALING ROAD	STALLINGBOROUGH	519846.78	411345.94	1998		50446	Urbis	Axia 16 LED 350mA	19 Watts	6.00 Metres	Steel	
Y	3	STREET LIGHTING	HEALING ROAD	STALLINGBOROUGH	519864	411322.97	1998		50447	Urbis	Axia 16 LED 350mA	19 Watts	6.00 Metres	Steel	
Y	4	STREET LIGHTING	HEALING ROAD	STALLINGBOROUGH	519879.95	411302.21	1998		50448	Urbis	Axia 16 LED 350mA	19 Watts	6.00 Metres	Steel	
Y	5	STREET LIGHTING	HEALING ROAD	STALLINGBOROUGH	519897.42	411280.38	1998		50449	Urbis	Axia 16 LED 350mA	19 Watts	6.00 Metres	Steel	
Y	6	STREET LIGHTING	HEALING ROAD	STALLINGBOROUGH	519918.43	411255.76	1998		50450	Urbis	Axia 16 LED 350mA	19 Watts	6.00 Metres	Steel	
Y	7	STREET LIGHTING	HEALING ROAD	STALLINGBOROUGH	519947.42	411240.38	1998		50451	Urbis	Axia 16 LED 350mA	19 Watts	6.00 Metres	Steel	
Y	8	STREET LIGHTING	HEALING ROAD	STALLINGBOROUGH	519972.73	411235.13	1998		50452	Urbis	Axia 16 LED 350mA	19 Watts	6.00 Metres	Steel	
Y	9	STREET LIGHTING	HEALING ROAD	STALLINGBOROUGH	519997.29	411230	1998		50453	Urbis	Axia 16 LED 350mA	19 Watts	6.00 Metres	Steel	
Y	10	STREET LIGHTING	HEALING ROAD	STALLINGBOROUGH	520029.31	411226.27	1998		50454	Urbis	Axia 16 LED 350mA	19 Watts	6.00 Metres	Steel	
Y	11	STREET LIGHTING	HEALING ROAD	STALLINGBOROUGH	520054.38	411228.17	1998		50455	Urbis	Axia 16 LED 350mA	19 Watts	6.00 Metres	Steel	
Y	12	STREET LIGHTING	HEALING ROAD	STALLINGBOROUGH	520082.22	411230.64	1998		50456	Urbis	Axia 16 LED 350mA	19 Watts	6.00 Metres	Steel	
Y	13	STREET LIGHTING	HEALING ROAD	STALLINGBOROUGH	520113.36	411233.29	1998		50457	Urbis	Axia 16 LED 350mA	19 Watts	6.00 Metres	Steel	
Y	14	STREET LIGHTING	HEALING ROAD	STALLINGBOROUGH	520144.25	411234.37	1998		50458	Urbis	Axia 16 LED 350mA	19 Watts	6.00 Metres	Steel	
Y	1	STREET LIGHTING	LEGGOTT WAY	STALLINGBOROUGH	520023.14	411394.05	1980		52422	1 Urbis LED	Axia 16 LED 500mA	28 Watts	5.00 Metres	Galvanised Steel	
Y	2	STREET LIGHTING	LEGGOTT WAY	STALLINGBOROUGH	520035.29	411358.04	1980		52423	1 Urbis LED	Axia 16 LED 500mA	28 Watts	5.00 Metres	Galvanised Steel	
Y	3	STREET LIGHTING	LEGGOTT WAY	STALLINGBOROUGH	520076.64	411368.22	1980		66454	1 Urbis LED	Axia 16 LED 500mA	28 Watts	5.00 Metres	Galvanised Steel	
Y	4	STREET LIGHTING	LEGGOTT WAY	STALLINGBOROUGH	520082	411341.33	1996		52425	Urbis	Axia 8 LED 350mA	10 Watts	5.00 Metres	Galvanised Steel	
Y	5	STREET LIGHTING	LEGGOTT WAY	STALLINGBOROUGH	520092.76	411317.72	1996		52427	Urbis	Axia 8 LED 350mA	10 Watts	5.00 Metres	Galvanised Steel	
Y	6	STREET LIGHTING	LEGGOTT WAY	STALLINGBOROUGH	520098.08	411299.81	1996		52428	Urbis	Axia 8 LED 350mA	10 Watts	5.00 Metres	Galvanised Steel	
Y	7	STREET LIGHTING	LEGGOTT WAY	STALLINGBOROUGH	520058.2	411285.95	1996		52429	Urbis	Axia 8 LED 350mA	10 Watts	5.00 Metres	Galvanised Steel	
Y	8	STREET LIGHTING	LEGGOTT WAY	STALLINGBOROUGH	520071.88	411317.66	1996		52426	Urbis	Axia 8 LED 350mA	10 Watts	5.00 Metres	Galvanised Steel	
Y	9	STREET LIGHTING	LEGGOTT WAY	STALLINGBOROUGH	520058.33	411323.16	1980		52424	Urbis	Axia 8 LED 350mA	10 Watts	5.00 Metres	Galvanised Steel	
Y	10	STREET LIGHTING	LEGGOTT WAY	STALLINGBOROUGH	520015.02	411328.84	2021	18/02/2021	68299	Urbis	Axia 24 LED 500mA	28 Watts	6.00 Metres	Galvanised Steel	
Y	11	STREET LIGHTING	LEGGOTT WAY	STALLINGBOROUGH	519978.59	411335.26	1980		52431	1 Urbis LED	Axia 16 LED 500mA	28 Watts	5.00 Metres	Galvanised Steel	
Y	12	STREET LIGHTING	LEGGOTT WAY	STALLINGBOROUGH	519945.68	411306.08	1980		52432	1 Urbis LED	Axia 16 LED 500mA	28 Watts	5.00 Metres	Galvanised Steel	
Y	13	STREET LIGHTING	LEGGOTT WAY	STALLINGBOROUGH	519931.43	411332.47	2021	18/02/2021	68452	Urbis	Axia 24 LED 500mA	28 Watts	6.00 Metres	Galvanised Steel	
Y	1	STREET LIGHTING	MAPLE GROVE	HEALING	521951.2	410353.96	2012	08/10/2012	53237	1 Urbis LED	Axia 16 LED 500mA	28 Watts	6.00 Metres	Steel	
Y	2	STREET LIGHTING	MAPLE GROVE	HEALING	521942.34	410331.25	2012	08/10/2012	53238	1 Urbis LED	Axia 16 LED 500mA	28 Watts	6.00 Metres	Steel	
Y	3	STREET LIGHTING	MAPLE GROVE	HEALING	521942.46	410331.05	2012		62980	1 Urbis LED	Axia 16 LED 500mA	28 Watts	6.00 Metres	Steel	
Y	1	STREET LIGHTING	NICHOLSON ROAD	HEALING	522060.6	410678.96	2002		54166	Urbis	Axia 16 LED 350mA	19 Watts	6.00 Metres	Stainless Steel	
Y	2	STREET LIGHTING	NICHOLSON ROAD	HEALING	522096.55	410661.9	2002		54167	Urbis	Axia 16 LED 350mA	19 Watts	6.00 Metres	Stainless Steel	
Y	3	STREET LIGHTING	NICHOLSON ROAD	HEALING	522127.15	410662.84	2002		54168	Urbis	Axia 16 LED 350mA	19 Watts	6.00 Metres	Stainless Steel	
Y	4	STREET LIGHTING	NICHOLSON ROAD	HEALING	522165.11	410668.36	2002		54169	Urbis	Axia 16 LED 350mA	19 Watts	6.00 Metres	Stainless Steel	
Y	5	STREET LIGHTING	NICHOLSON ROAD	HEALING	522192.48	410656.74	2002		54170	Urbis	Axia 16 LED 350mA	19 Watts	6.00 Metres	Stainless Steel	
Y	6	STREET LIGHTING	NICHOLSON ROAD	HEALING	522223.35	410651.53	2002		54171	Urbis	Axia 16 LED 350mA	19 Watts	6.00 Metres	Stainless Steel	
Y	7	STREET LIGHTING	NICHOLSON ROAD	HEALING	522251.13	410659.03	2002		54172	Urbis	Axia 16 LED 350mA	19 Watts	6.00 Metres	Stainless Steel	
Y	8	STREET LIGHTING	NICHOLSON ROAD	HEALING	522284.38	410653.14	2002		54173	Urbis	Axia 16 LED 350mA	19 Watts	6.00 Metres	Stainless Steel	
Y	9	STREET LIGHTING	NICHOLSON ROAD	HEALING	522313.55	410633.28	2002		54174	Urbis	Axia 16 LED 350mA	19 Watts	6.00 Metres	Stainless Steel	
Y	10	STREET LIGHTING	NICHOLSON ROAD	HEALING	522323.95	410609.79	2002		54175	Urbis	Axia 16 LED 350mA	19 Watts	6.00 Metres	Stainless Steel	
Y	11	STREET LIGHTING	NICHOLSON ROAD	HEALING	522326.65	410576.07	2002		54176	Urbis	Axia 16 LED 350mA	19 Watts	6.00 Metres	Stainless Steel	
Y	12	STREET LIGHTING	NICHOLSON ROAD	HEALING	522313.73	410545.31	2002		54177	Urbis	Axia 16 LED 350mA	19 Watts	6.00 Metres	Stainless Steel	
Y	13	STREET LIGHTING	NICHOLSON ROAD	HEALING	522299.39	410525.75	2002		54178	Urbis	Axia 16 LED 350mA	19 Watts	6.00 Metres	Stainless Steel	
Y	14	STREET LIGHTING	NICHOLSON ROAD	HEALING	522265.07	410515.73	2002		54179	Urbis	Axia 16 LED 350mA	19 Watts	6.00 Metres	Stainless Steel	
Y	15	STREET LIGHTING	NICHOLSON ROAD	HEALING	522251.54	410500.67	2002		54180	Urbis	Axia 16 LED 350mA	19 Watts	6.00 Metres	Stainless Steel	
Y	16	STREET LIGHTING	NICHOLSON ROAD	HEALING	522222.88	410492.22	2002		54181	Urbis	Axia 16 LED 350mA	19 Watts	6.00 Metres	Stainless Steel	
Y	17	STREET LIGHTING	NICHOLSON ROAD	HEALING	522178.52	410499.04	2002		54182	Urbis	Axia 16 LED 350mA	19 Watts	6.00 Metres	Stainless Steel	
Y	18	STREET LIGHTING	NICHOLSON ROAD	HEALING	522150.58	410497.45	2002		54183	Urbis	Axia 16 LED 350mA	19 Watts	6.00 Metres	Stainless Steel	
Y	19	STREET LIGHTING	NICHOLSON ROAD	HEALING	522103.24	410505.91	2002		54184	Urbis	Axia 16 LED 350mA	19 Watts	6.00 Metres	Stainless Steel	
Y	20	STREET LIGHTING	NICHOLSON ROAD	HEALING	522117.96	410481.29	2002		54185	Urbis	Axia 16 LED 350mA	19 Watts	6.00 Metres	Stainless Steel	
Y	1	STREET LIGHTING	PINE WALK	HEALING	522280.3	410574.07	2014		62704	1 Urbis LED	Axia 16 LED 500mA	28 Watts	6.00 Metres	Galvanised Steel	
Y	2	STREET LIGHTING	PINE WALK	HEALING	522245.24	410582.74	2014		62705	1 Urbis LED	Axia 16 LED 500mA	28 Watts	6.00 Metres	Galvanised Steel	
Y	3	STREET LIGHTING	PINE WALK	HEALING	522208.46	410574.77	2014		62706	1 Urbis LED	Axia 16 LED 500mA	28 Watts	6.00 Metres	Galvanised Steel	
Y	1	STREET LIGHTING	WELLS ROAD	HEALING	521025.94	410336.09	1997		60260	1 Urbis LED	Teceo 40 LED 500mA	64 Watts	8.00 Metres	Galvanised Steel	
Y	1	STREET LIGHTING	KEELBY ROAD	STALLINGBOROUGH	518664.51	412031.33	2012		51484	1 Urbis LED	Teceo 32 LED 500mA	52 Watts	6.00 Metres	Galvanised Steel	
Y	2	STREET LIGHTING	KEELBY ROAD	STALLINGBOROUGH	518632.69	412006.25	2018	02/07/2018	51485	Urbis	Teceo 32 LED 500mA	52 Watts	6.00 Metres	Galvanised Steel	
Y	1	STREET LIGHTING	HOLLY CLOSE	STALLINGBOROUGH	520054.04	411446.58	1996		50947	Urbis	Axia 16 LED 350mA	19 Watts	5.00 Metres	Galvanised Steel	
Y	2	STREET LIGHTING	HOLLY CLOSE	STALLINGBOROUGH	520053.5	411476.83	1996		50948	Urbis	Axia 16 LED 350mA	19 Watts	5.00 Metres	Galvanised Steel	
Y	3	STREET LIGHTING	HOLLY CLOSE	STALLINGBOROUGH	520050.02	411506.9	1996		50949	Urbis	Axia 16 LED 350mA	19 Watts	5.00 Metres	Galvanised Steel	
Y	4	STREET LIGHTING	HOLLY CLOSE	STALLINGBOROUGH	520049.57	411538.61	1996		50950	Urbis	Axia 16 LED 350mA	19 Watts	5.00 Metres	Galvanised Steel	
Y	5	STREET LIGHTING	HOLLY CLOSE	STALLINGBOROUGH	520028.64	411553.14	1996		50951	Urbis	Axia 16 LED 350mA	19 Watts	5.00 Metres	Galvanised Steel	
Y	6	STREET LIGHTING	HOLLY CLOSE	STALLINGBOROUGH	520029.64	411570.41	1996		50952	Urbis	Axia 16 LED 350mA	19 Watts	5.00 Metres	Galvanised Steel	
Y	7	STREET LIGHTING	HOLLY CLOSE	STALLINGBOROUGH	519999.67	411555.61	1996		50953	Urbis	Axia 16 LED 350mA	19 Watts	5.00 Metres	Galvanised Steel	
Y	8	STREET LIGHTING	HOLLY CLOSE	STALLINGBOROUGH	519976.09	411555.06	1996		50954	Urbis	Axia 16 LED 350mA	19 Watts	5.00 Metres	Galvanised Steel	
Y	1	STREET LIGHTING	SAXONFIELDS DRIVE	STALLINGBOROUGH	519737.91	411351.97	2010		56629	Urbis	Axia 16 LED 350mA	19 Watts	6.00 Metres	Steel	
Y	2	STREET LIGHTING	SAXONFIELDS DRIVE	STALLINGBOROUGH	519755.27	411328.29	2010		56630	Urbis	Axia 16 LED 350mA	19 Watts	6.00 Metres	Steel	
Y	3	STREET LIGHTING	SAXONFIELDS DRIVE	STALLINGBOROUGH	519776.35	411313.41	2010		56631	Urbis	Axia 16 LED 350mA	19 Watts	6.00 Metres	Steel	
Y	4	STREET LIGHTING	SAXONFIELDS DRIVE	STALLINGBOROUGH	519793.46	411301.54	2010		56632	Urbis	Axia 16 LED 350mA	19 Watts	6.00 Metres	Steel	
Y	5	STREET LIGHTING	SAXONFIELDS DRIVE	STALLINGBOROUGH	519809.27	411321.39	2010		56633	Urbis	Axia 16 LED 350mA	19 Watts	6.00 Metres	Steel	
Y	6	STREET LIGHTING	SAXONFIELDS DRIVE	STALLINGBOROUGH	519829.79	411318.96	2010		56634	Urbis	Axia 16 LED 350mA	19 Watts	6.00 Metres	Steel	
Y	7	STREET LIGHTING	SAXONFIELDS DRIVE	STALLINGBOROUGH	519839.51	411290.68	2010		56635	Urbis	Axia 16 LED 350mA	19 Watts	6.00 Metres	Steel	
Y	8	STREET LIGHTING	SAXONFIELDS DRIVE	STALLINGBOROUGH	519862.39	411284.39	2010		56636	Urbis	Axia 16 LED 350mA	19 Watts	6.00 Metres	Steel	
Y	9	STREET LIGHTING	SAXONFIELDS DRIVE	STALLINGBOROUGH	519877.34	411280.22	2010		56637	Urbis	Axia 16 LED 350mA	19 Watts	6.00 Metres	Steel	
Y	1	STREET LIGHTING	MANOR FARM MEWS	STALLINGBOROUGH	520677.42	411910.7	2008		53219	Urbis	Axia 16 LED 350mA	19 Watts	6.00 Metres	Steel	
Y	2	STREET LIGHTING	MANOR FARM MEWS	STALLINGBOROUGH	520696.75	411890.04	2008		53220	Urbis	Axia 16 LED 350mA	19 Watts	6.00 Metres	Steel	
Y	3	STREET LIGHTING	MANOR FARM MEWS	STALLINGBOROUGH	520675.13	411871.82	2008		53221	Urbis	Axia 16 LED 350mA	19 Watts	6.00 Metres	Steel	
Y	1	STREET LIGHTING	LOW ROAD MINI ROUNDABOUT	HEALING	521460.34	410413.84	1999		52970	Urbis	Axia 16 LED 350mA	19 Watts	6.00 Metres	Galvanised Steel	
Y	2	STREET LIGHTING	LOW ROAD MINI ROUNDABOUT	HEALING	521451.48	410422.32	1999		52971	Urbis	Axia 16 LED 350mA	19 Watts	6.00 Metres	Galvanised Steel	
Y	3	STREET LIGHTING	LOW ROAD MINI ROUNDABOUT	HEALING	521464.01	410433.46	1999		52972	Urbis	Axia 16 LED 350mA	19 Watts	6.00 Metres	Galvanised Steel	
Y	4	STREET LIGHTING	LOW ROAD MINI ROUNDABOUT	HEALING	521470.59	410421.94	1999		52973	Urbis	Axia 16 LED 350mA	19 Watts	6.00 Metres	Galvanised Steel	
Y	1	STREET LIGHTING	BEVERLEY COURT	HEALING	521858.56	410750.53	1997		44107	Urbis	Axia 16 LED 350mA	19 Watts	5.00 Metres	Galvanised Steel	
Y	2	STREET LIGHTING	BEVERLEY COURT	HEALING	521870.91	410728.86	1997		44108	Urbis	Axia 16 LED 350mA	19 Watts	5.00 Metres	Galvanised Steel	
Y	3	STREET LIGHTING	BEVERLEY COURT	HEALING	521893.4	410726.97	1997		44109	Urbis	Axia 16 LED 350mA	19 Watts	5.00 Metres	Galvanised Steel	
Y	4	STREET LIGHTING	BEVERLEY COURT	HEALING	521910.48	410717.29	1997		44110	Urbis	Axia 16 LED 350mA	19 Watts	5.00 Metres	Galvanised Steel	
Y	1	STREET LIGHTING	HAWTHORN CLOSE	HEALING	521516.67	411005.4	1992		50369	Urbis	Axia 16 LED 350mA	19 Watts	5.00 Metres	Galvanised Steel	
Y	2	STREET LIGHTING	HAWTHORN CLOSE	HEALING	521530.85	411026.22	1992		50370	Urbis	Axia 16 LED 350mA	19 Watts	5.00 Metres	Galvanised Steel	
Y	3	STREET LIGHTING	HAWTHORN CLOSE	HEALING	521546.16	411049.07	1992		50371	Urbis	Axia 16 LED 350mA	19 Watts	5.00 Metres	Galvanised Steel	
Y	4	STREET LIGHTING	HAWTHORN CLOSE	HEALING	521560.21	411070.65	1992		50372	Urbis	Axia 16 LED 350mA	19 Watts	5.00 Metres	Galvanised Steel	
Y	5	STREET LIGHTING	HAWTHORN CLOSE	HEALING	521576.42	411059.26	1992		50373	Urbis	Axia 16 LED 350mA	19 Watts	5.00 Metres	Galvanised Steel	
Y	6	STREET LIGHTING	HAWTHORN CLOSE	HEALING	521578.31	411096.92	1992		50374	Urbis	Axia 16 LED 350mA	19 Watts	5.00 Metres	Galvanised Steel	
Y	1	STREET LIGHTING	LUCAS COURT	HEALING	521474.06	410899.67	2014		62695	Urbis	Axia 16 LED 350mA	19 Watts	6.00 Metres	Galvanised Steel	
Y	2	STREET LIGHTING	LUCAS COURT	HEALING	521490.9	410889.29	1993		52979	Urbis	Axia 16 LED 350mA	19 Watts	5.00 Metres	Galvanised Steel	
Y	3	STREET LIGHTING	LUCAS COURT	HEALING	521515.84	410873.17	1993		52980	Urbis	Axia 16 LED 350mA	19 Watts	5.00 Metres	Galvanised Steel	
Y	4	STREET LIGHTING	LUCAS COURT	HEALING	521540.14	410857.16	1993		52981	Urbis	Axia 16 LED 350mA	19 Watts	5.00 Metres	Galvanised Steel	
Y	5	STREET LIGHTING	LUCAS COURT	HEALING	521562.7	410844.63	2021	18/02/2021	68298	Urbis	Axia 16 LED 350mA	19 Watts	6.00 Metres	Galvanised Steel	
Y	6	STREET LIGHTING	LUCAS COURT	HEALING	521553.05	410833.23	1993		52983	Urbis	Axia 16 LED 350mA	19 Watts	5.00 Metres	Galvanised Steel	
Y	1	STREET LIGHTING	MANOR COURT	STALLINGBOROUGH	520619.29	411895.24	1997		53198	Urbis	Axia 16 LED 350mA	19 Watts	5.00 Metres	Galvanised Steel	
Y	2	STREET LIGHTING	MANOR COURT	STALLINGBOROUGH	520605.44	411910.61	1997		53199	Urbis	Axia 16 LED 350mA	19 Watts	5.00 Metres	Galvanised Steel	
Y	3	STREET LIGHTING	MANOR COURT	STALLINGBOROUGH	520594.77	411922.25	1997		53200	Urbis	Axia 16 LED 350mA	19 Watts	5.00 Metres	Galvanised Steel	
Y	4	STREET LIGHTING	MANOR COURT	STALLINGBOROUGH	520613.58	411934.55	1997		53201	Urbis	Axia 16 LED 350mA	19 Watts	5.00 Metres	Galvanised Steel	
Y	1	STREET LIGHTING	THE CLOSE	STALLINGBOROUGH	520275.77	411447.38	2014		62739	Urbis	Axia 8 LED 350mA	10 Watts	6.00 Metres	Galvanised Steel	
Y	2	STREET LIGHTING	THE CLOSE	STALLINGBOROUGH	520251.59	411448.71	2014		62740	Urbis	Axia 8 LED 350mA	10 Watts	6.00 Metres	Galvanised Steel	
Y	1	STREET LIGHTING	WISTERIA DRIVE	HEALING	520944.66	410490.88	1999		61000	1 Urbis LED	Teceo 24 LED 500mA	40 Watts	6.00 Metres	Galvanised Steel	
Y	2	STREET LIGHTING	WISTERIA DRIVE	HEALING	520972.12	410511.64	1999		61001	1 Urbis LED	Teceo 24 LED 500mA	40 Watts	6.00 Metres	Galvanised Steel	
Y	3	STREET LIGHTING	WISTERIA DRIVE	HEALING	521003.51	410529.04	2000		61002	1 Urbis LED	Teceo 24 LED 500mA	40 Watts	6.00 Metres	Galvanised Steel	
Y	4	STREET LIGHTING	WISTERIA DRIVE	HEALING	521019.21	410564.1	1999		61003	1 Urbis LED	Teceo 24 LED 500mA	40 Watts	6.00 Metres	Galvanised Steel	
Y	5	STREET LIGHTING	WISTERIA DRIVE	HEALING	521049.97	410583.09	1999		61004	1 Urbis LED	Teceo 24 LED 500mA	40 Watts	6.00 Metres	Galvanised Steel	
Y	6	STREET LIGHTING	WISTERIA DRIVE	HEALING	521087.31	410591.19	2000		61005	1 Urbis LED	Teceo 24 LED 500mA	40 Watts	6.00 Metres	Galvanised Steel	
Y	7	STREET LIGHTING	WISTERIA DRIVE	HEALING	521115.28	410605.43	1999		61006	1 Urbis LED	Teceo 24 LED 500mA	40 Watts	6.00 Metres	Galvanised Steel	
Y	8	STREET LIGHTING	WISTERIA DRIVE	HEALING	521137.88	410586.99	2000		61007	1 Urbis LED	Teceo 24 LED 500mA	40 Watts	6.00 Metres	Galvanised Steel	
Y	9	STREET LIGHTING	WISTERIA DRIVE	HEALING	521170.8	410568.94	2002		61008	1 Urbis LED	Teceo 24 LED 500mA	40 Watts	6.00 Metres	Galvanised Steel	

Y	10	STREET LIGHTING	WISTERIA DRIVE	HEALING	521190.57	410539.35	2002		61009	1 Urbis LED	Teceo 24 LED 500mA	40 Watts	6.00 Metres	Galvanised Steel	
Y	11	STREET LIGHTING	WISTERIA DRIVE	HEALING	521201.46	410505.49	2002		61010	1 Urbis LED	Teceo 24 LED 500mA	40 Watts	6.00 Metres	Galvanised Steel	
Y	12	STREET LIGHTING	WISTERIA DRIVE	HEALING	521207.06	410469.45	2003		61011	1 Urbis LED	Teceo 24 LED 500mA	40 Watts	6.00 Metres	Galvanised Steel	
Y	13	STREET LIGHTING	WISTERIA DRIVE	HEALING	521216.72	410445.08	2003		61012	1 Urbis LED	Teceo 24 LED 500mA	40 Watts	6.00 Metres	Galvanised Steel	
Y	14	STREET LIGHTING	WISTERIA DRIVE	HEALING	521229.19	410418.04	2003		61013	1 Urbis LED	Teceo 24 LED 500mA	40 Watts	6.00 Metres	Galvanised Steel	
Y	15	STREET LIGHTING	WISTERIA DRIVE	HEALING	521256.9	410409.1	2003		61014	1 Urbis LED	Teceo 24 LED 500mA	40 Watts	6.00 Metres	Galvanised Steel	
Y	16	STREET LIGHTING	WISTERIA DRIVE	HEALING	521281.4	410389.6	1999		61015	1 Urbis LED	Teceo 24 LED 500mA	40 Watts	6.00 Metres	Galvanised Steel	
Y	17	STREET LIGHTING	WISTERIA DRIVE	HEALING	521313.71	410407.04	1999		61016	1 Urbis LED	Teceo 24 LED 500mA	40 Watts	6.00 Metres	Galvanised Steel	
Y	18	STREET LIGHTING	WISTERIA DRIVE	HEALING	521345.51	410411.9	1999		61017	1 Urbis LED	Teceo 24 LED 500mA	40 Watts	6.00 Metres	Galvanised Steel	
Y	19	STREET LIGHTING	WISTERIA DRIVE	HEALING	521373.46	410402.08	1999		61018	1 Urbis LED	Teceo 24 LED 500mA	40 Watts	6.00 Metres	Galvanised Steel	
Y	20	STREET LIGHTING	WISTERIA DRIVE	HEALING	521390.47	410381.93	1999		61019	1 Urbis LED	Teceo 24 LED 500mA	40 Watts	6.00 Metres	Galvanised Steel	
Y	21	STREET LIGHTING	WISTERIA DRIVE	HEALING	521418.42	410394.58	1999		61020	1 Urbis LED	Teceo 24 LED 500mA	40 Watts	6.00 Metres	Galvanised Steel	
Y	22	STREET LIGHTING	WISTERIA DRIVE	HEALING	521450.21	410405.72	1999		61021	1 Urbis LED	Teceo 24 LED 500mA	40 Watts	6.00 Metres	Galvanised Steel	
Y	1	STREET LIGHTING	LARKSPUR AVENUE	HEALING	521069.58	410609.87	1999		52352	Urbis	Axia 16 LED 350mA	19 Watts	5.00 Metres	Galvanised Steel	
Y	2	STREET LIGHTING	LARKSPUR AVENUE	HEALING	521054.4	410638.84	1999		52353	Urbis	Axia 16 LED 350mA	19 Watts	5.00 Metres	Galvanised Steel	
Y	3	STREET LIGHTING	LARKSPUR AVENUE	HEALING	521060.22	410663.08	1999		52354	Urbis	Axia 16 LED 350mA	19 Watts	5.00 Metres	Galvanised Steel	
Y	4	STREET LIGHTING	LARKSPUR AVENUE	HEALING	521063.26	410699.03	1999		52355	Urbis	Axia 16 LED 350mA	19 Watts	5.00 Metres	Galvanised Steel	
Y	5	STREET LIGHTING	LARKSPUR AVENUE	HEALING	521077.94	410734.79	2000		52356	Urbis	Axia 16 LED 350mA	19 Watts	5.00 Metres	Galvanised Steel	
Y	6	STREET LIGHTING	LARKSPUR AVENUE	HEALING	521076.62	410767.73	1999		52357	Urbis	Axia 16 LED 350mA	19 Watts	5.00 Metres	Galvanised Steel	
Y	7	STREET LIGHTING	LARKSPUR AVENUE	HEALING	521054.22	410791.52	1999		52358	Urbis	Axia 16 LED 350mA	19 Watts	5.00 Metres	Galvanised Steel	
Y	8	STREET LIGHTING	LARKSPUR AVENUE	HEALING	521049.25	410801.71	2021	01/06/2021	70033	Urbis	Ampera 16 LED 500mA	28 Watts	6.00 Metres	Galvanised Steel	
Y	9	STREET LIGHTING	LARKSPUR AVENUE	HEALING	521020.05	410815.97	2021	01/06/2021	70034	Urbis	Ampera 16 LED 500mA	28 Watts	6.00 Metres	Galvanised Steel	
Y	10	STREET LIGHTING	LARKSPUR AVENUE	HEALING	520984.99	410800.52	2021	01/06/2021	70035	Urbis	Ampera 16 LED 500mA	28 Watts	6.00 Metres	Galvanised Steel	
Y	11	STREET LIGHTING	LARKSPUR AVENUE	HEALING	520952.72	410775.72	2021	01/06/2021	70036	Urbis	Ampera 16 LED 500mA	28 Watts	6.00 Metres	Galvanised Steel	
Y	12	STREET LIGHTING	LARKSPUR AVENUE	HEALING	520926.26	410760.65	2021	01/06/2021	70037	Urbis	Ampera 16 LED 500mA	28 Watts	6.00 Metres	Galvanised Steel	
Y	13	STREET LIGHTING	LARKSPUR AVENUE	HEALING	521052.41	410831.21	2021	01/06/2021	70041	Urbis	Ampera Mini 8 LED 350mA	10 Watts	6.00 Metres	Steel	
Y	14	STREET LIGHTING	LARKSPUR AVENUE	HEALING	521073.82	410843.25	2021	01/06/2021	70042	Urbis	Ampera Mini 8 LED 350mA	10 Watts	6.00 Metres	Steel	
Y	15	STREET LIGHTING	LARKSPUR AVENUE	HEALING	521017.26	410841.29	2021	01/06/2021	70038	Urbis	Ampera 16 LED 500mA	28 Watts	6.00 Metres	Galvanised Steel	
Y	16	STREET LIGHTING	LARKSPUR AVENUE	HEALING	521001.31	410867.75	2021	01/06/2021	70039	Urbis	Ampera 16 LED 500mA	28 Watts	6.00 Metres	Galvanised Steel	
Y	17	STREET LIGHTING	LARKSPUR AVENUE	HEALING	521001.72	410891.41	2021	01/06/2021	70040	Urbis	Ampera 16 LED 500mA	28 Watts	6.00 Metres	Galvanised Steel	
Y	18	STREET LIGHTING	LARKSPUR AVENUE	HEALING	520985.48	410907.09	2021	01/06/2021	70043	Urbis	Ampera Mini 8 LED 350mA	10 Watts	6.00 Metres	Steel	
Y	1	STREET LIGHTING	BUDDLEIA CLOSE	HEALING	521035.28	410657.79	1999		44904	Urbis	Axia 16 LED 350mA	19 Watts	5.00 Metres	Galvanised Steel	
Y	2	STREET LIGHTING	BUDDLEIA CLOSE	HEALING	521009.46	410657.1	1999		44905	Urbis	Axia 16 LED 350mA	19 Watts	5.00 Metres	Galvanised Steel	
Y	3	STREET LIGHTING	BUDDLEIA CLOSE	HEALING	521031.11	410675.7	1999		44906	Urbis	Axia 16 LED 350mA	19 Watts	5.00 Metres	Galvanised Steel	
Y	4	STREET LIGHTING	BUDDLEIA CLOSE	HEALING	521019.08	410701.31	1999		44907	Urbis	Axia 16 LED 350mA	19 Watts	5.00 Metres	Galvanised Steel	
Y	5	STREET LIGHTING	BUDDLEIA CLOSE	HEALING	521003.01	410715.43	1999		44908	Urbis	Axia 16 LED 350mA	19 Watts	5.00 Metres	Galvanised Steel	
Y	6	STREET LIGHTING	BUDDLEIA CLOSE	HEALING	521019.59	410736.31	1999		44909	Urbis	Axia 16 LED 350mA	19 Watts	5.00 Metres	Galvanised Steel	
Y	1	STREET LIGHTING	COWSLIP COURT	HEALING	521231.25	410450.93	2003		46840	Urbis	Axia 16 LED 350mA	19 Watts	5.00 Metres	Galvanised Steel	
Y	2	STREET LIGHTING	COWSLIP COURT	HEALING	521248.52	410456.16	2003		46841	Urbis	Axia 16 LED 350mA	19 Watts	5.00 Metres	Galvanised Steel	
Y	1	STREET LIGHTING	CORNFLOWER CLOSE	HEALING	521181	410459	2003		46711	Urbis	Axia 16 LED 350mA	19 Watts	6.00 Metres	Galvanised Steel	
Y	2	STREET LIGHTING	CORNFLOWER CLOSE	HEALING	521148	410436	2008		46712	Urbis	Axia 16 LED 350mA	19 Watts	6.00 Metres	Stainless Steel	
Y	3	STREET LIGHTING	CORNFLOWER CLOSE	HEALING	521136	410460	2008		46713	Urbis	Axia 16 LED 350mA	19 Watts	5.00 Metres	Stainless Steel	
Y	4	STREET LIGHTING	CORNFLOWER CLOSE	HEALING	521109	410473	2008		46714	Urbis	Axia 16 LED 350mA	19 Watts	6.00 Metres	Stainless Steel	
Y	5	STREET LIGHTING	CORNFLOWER CLOSE	HEALING	521087	410477	2008		46715	Urbis	Axia 16 LED 350mA	19 Watts	6.00 Metres	Stainless Steel	
Y	6	STREET LIGHTING	CORNFLOWER CLOSE	HEALING	521062	410486	2008		46716	Urbis	Axia 16 LED 350mA	19 Watts	6.00 Metres	Stainless Steel	
Y	7	STREET LIGHTING	CORNFLOWER CLOSE	HEALING	521127	410447	2008		46717	Urbis	Axia 16 LED 350mA	19 Watts	6.00 Metres	Stainless Steel	
Y	8	STREET LIGHTING	CORNFLOWER CLOSE	HEALING	521113	410421	2008		46718	Urbis	Axia 16 LED 350mA	19 Watts	6.00 Metres	Stainless Steel	
Y	9	STREET LIGHTING	CORNFLOWER CLOSE	HEALING	521102	410437	2008		46719	Urbis	Axia 16 LED 350mA	19 Watts	6.00 Metres	Stainless Steel	
Y	1	STREET LIGHTING	APPLE TREE COURT	HEALING	521174.14	410541.51	2000		43291	Urbis	Axia 16 LED 350mA	19 Watts	5.00 Metres	Galvanised Steel	
Y	2	STREET LIGHTING	APPLE TREE COURT	HEALING	521151.48	410533.79	2000		43292	Urbis	Axia 16 LED 350mA	19 Watts	5.00 Metres	Galvanised Steel	
Y	3	STREET LIGHTING	APPLE TREE COURT	HEALING	521135.53	410517.65	2000		43293	Urbis	Axia 16 LED 350mA	19 Watts	5.00 Metres	Galvanised Steel	
Y	4	STREET LIGHTING	APPLE TREE COURT	HEALING	521131.1	410540.49	2000		43294	Urbis	Axia 16 LED 350mA	19 Watts	5.00 Metres	Galvanised Steel	
Y	1	STREET LIGHTING	SNOWDROP CLOSE	HEALING	521274.38	410647.67	2000		57287	Urbis	Axia 16 LED 350mA	19 Watts	5.00 Metres	Galvanised Steel	
Y	2	STREET LIGHTING	SNOWDROP CLOSE	HEALING	521276.91	410619.93	2000		57288	Urbis	Axia 16 LED 350mA	19 Watts	5.00 Metres	Galvanised Steel	
Y	3	STREET LIGHTING	SNOWDROP CLOSE	HEALING	521291.72	410609.61	2000		57289	Urbis	Axia 16 LED 350mA	19 Watts	5.00 Metres	Galvanised Steel	
Y	4	STREET LIGHTING	SNOWDROP CLOSE	HEALING	521270.96	410586.63	2000		57290	Urbis	Axia 16 LED 350mA	19 Watts	5.00 Metres	Galvanised Steel	
Y	5	STREET LIGHTING	SNOWDROP CLOSE	HEALING	521236.48	410593.82	2000		57291	Urbis	Axia 16 LED 350mA	19 Watts	5.00 Metres	Galvanised Steel	
Y	6	STREET LIGHTING	SNOWDROP CLOSE	HEALING	521250.53	410577.68	2000		57292	Urbis	Axia 16 LED 350mA	19 Watts	5.00 Metres	Galvanised Steel	
Y	1	STREET LIGHTING	CLEMATIS AVENUE	HEALING	521151.6	410606.76	1997		46281	Urbis	Axia 16 LED 350mA	19 Watts	5.00 Metres	Galvanised Steel	
Y	2	STREET LIGHTING	CLEMATIS AVENUE	HEALING	521179.58	410619.54	1997		46282	Urbis	Axia 16 LED 350mA	19 Watts	5.00 Metres	Galvanised Steel	
Y	3	STREET LIGHTING	CLEMATIS AVENUE	HEALING	521208.18	410636.82	1997		46283	Urbis	Axia 16 LED 350mA	19 Watts	5.00 Metres	Galvanised Steel	
Y	4	STREET LIGHTING	CLEMATIS AVENUE	HEALING	521225.91	410653.52	1997		46284	Urbis	Axia 16 LED 350mA	19 Watts	5.00 Metres	Galvanised Steel	
Y	5	STREET LIGHTING	CLEMATIS AVENUE	HEALING	521258.22	410664.63	1997		46285	Urbis	Axia 16 LED 350mA	19 Watts	5.00 Metres	Galvanised Steel	
Y	6	STREET LIGHTING	CLEMATIS AVENUE	HEALING	521285.95	410675.44	2000		46286	Urbis	Axia 16 LED 350mA	19 Watts	5.00 Metres	Galvanised Steel	
Y	7	STREET LIGHTING	CLEMATIS AVENUE	HEALING	521275.81	410697.6	2000		46287	Urbis	Axia 16 LED 350mA	19 Watts	5.00 Metres	Galvanised Steel	
Y	8	STREET LIGHTING	CLEMATIS AVENUE	HEALING	521256.68	410707.93	2000		46288	Urbis	Axia 16 LED 350mA	19 Watts	5.00 Metres	Galvanised Steel	
Y	9	STREET LIGHTING	CLEMATIS AVENUE	HEALING	521292.54	410704.84	2000		46289	Urbis	Axia 16 LED 350mA	19 Watts	5.00 Metres	Galvanised Steel	
Y	10	STREET LIGHTING	CLEMATIS AVENUE	HEALING	521302.79	410729.85	2000		46290	Urbis	Axia 16 LED 350mA	19 Watts	5.00 Metres	Galvanised Steel	
Y	11	STREET LIGHTING	CLEMATIS AVENUE	HEALING	521321.03	410737.11	2003		46291	Urbis	Axia 16 LED 350mA	19 Watts	5.00 Metres	Galvanised Steel	
Y	1	STREET LIGHTING	BLUEBELL COURT	HEALING	521140.88	410731.92	2002		44255	Urbis	Axia 16 LED 350mA	19 Watts	6.00 Metres	Galvanised Steel	
Y	2	STREET LIGHTING	BLUEBELL COURT	HEALING	521133.06	410708.7	2002		44256	Urbis	Axia 16 LED 350mA	19 Watts	6.00 Metres	Galvanised Steel	
Y	3	STREET LIGHTING	BLUEBELL COURT	HEALING	521131.18	410680.53	2002		44257	Urbis	Axia 16 LED 350mA	19 Watts	6.00 Metres	Galvanised Steel	
Y	1	STREET LIGHTING	FORSYTHIA AVENUE	HEALING	521096	410742	2002		48880	Urbis	Axia 16 LED 350mA	19 Watts	6.00 Metres	Galvanised Steel	
Y	2	STREET LIGHTING	FORSYTHIA AVENUE	HEALING	521128.79	410744.8	2002		48881	Urbis	Axia 16 LED 350mA	19 Watts	6.00 Metres	Galvanised Steel	
Y	3	STREET LIGHTING	FORSYTHIA AVENUE	HEALING	521151.64	410745.64	2004		48882	Urbis	Axia 16 LED 350mA	19 Watts	6.00 Metres	Stainless Steel	
Y	4	STREET LIGHTING	FORSYTHIA AVENUE	HEALING	521168.32	410774.44	2003		48883	Urbis	Axia 16 LED 350mA	19 Watts	6.00 Metres	Galvanised Steel	
Y	5	STREET LIGHTING	FORSYTHIA AVENUE	HEALING	521197.44	410789.44	2003		48884	Urbis	Axia 16 LED 350mA	19 Watts	6.00 Metres	Galvanised Steel	
Y	1	STREET LIGHTING	BUTTERCUP COURT	HEALING	521146.57	410758.29	2003		45016	Urbis	Axia 16 LED 350mA	19 Watts	6.00 Metres	Galvanised Steel	
Y	2	STREET LIGHTING	BUTTERCUP COURT	HEALING	521132.13	410784.09	2003		45017	Urbis	Axia 16 LED 350mA	19 Watts	6.00 Metres	Galvanised Steel	
Y	3	STREET LIGHTING	BUTTERCUP COURT	HEALING	521137.68	410804.71	2003		45018	Urbis	Axia 16 LED 350mA	19 Watts	6.00 Metres	Galvanised Steel	
Y	1	STREET LIGHTING	CELANDINE COURT	HEALING	521180.65	410757.79	2003		45528	Urbis	Axia 16 LED 350mA	19 Watts	6.00 Metres	Galvanised Steel	
Y	2	STREET LIGHTING	CELANDINE COURT	HEALING	521192.9	410725.62	2003		45529	Urbis	Axia 16 LED 350mA	19 Watts	6.00 Metres	Galvanised Steel	
Y	3	STREET LIGHTING	CELANDINE COURT	HEALING	521208.54	410738.2	2003		45530	Urbis	Axia 16 LED 350mA	19 Watts	6.00 Metres	Galvanised Steel	
Y	1	STREET LIGHTING	PRIMROSE CLOSE	HEALING	521311.96	410697.25	2001		55592	Urbis	Axia 16 LED 350mA	19 Watts	5.00 Metres	Galvanised Steel	
Y	2	STREET LIGHTING	PRIMROSE CLOSE	HEALING	521328.63	410668.44	2001		55593	Urbis	Axia 16 LED 350mA	19 Watts	5.00 Metres	Galvanised Steel	
Y	3	STREET LIGHTING	PRIMROSE CLOSE	HEALING	521353.95	410648.34	2001		55594	Urbis	Axia 16 LED 350mA	19 Watts	5.00 Metres	Galvanised Steel	
Y	4	STREET LIGHTING	PRIMROSE CLOSE	HEALING	521348.68	410686.01	2001		55595	Urbis	Axia 16 LED 350mA	19 Watts	5.00 Metres	Galvanised Steel	
Y	5	STREET LIGHTING	PRIMROSE CLOSE	HEALING	521364.05	410701	2001		55596	Urbis	Axia 16 LED 350mA	19 Watts	5.00 Metres	Galvanised Steel	
Y	1	STREET LIGHTING	POPPY MEWS	HEALING	521206.42	410533.7	2008		55553	Urbis	Axia 16 LED 350mA	19 Watts	5.00 Metres	Stainless Steel	
Y	2	STREET LIGHTING	POPPY MEWS	HEALING	521225.43	410537.12	2008		55554	Urbis	Axia 16 LED 350mA	19 Watts	5.00 Metres	Stainless Steel	
Y	3	STREET LIGHTING	POPPY MEWS	HEALING	521219.99	410552.75	2020	01/12/2020	68193	Urbis	Axia 16 LED 350mA	19 Watts	6.00 Metres	Galvanised Steel	
Y	4	STREET LIGHTING	POPPY MEWS	HEALING	521204.55	410553.57	2008		55556	Urbis	Axia 16 LED 350mA	19 Watts	5.00 Metres	Stainless Steel	
Y	5	STREET LIGHTING	POPPY MEWS	HEALING	521188.89	410565.51	2008		55557	Urbis	Axia 16 LED 350mA	19 Watts	5.00 Metres	Galvanised Steel	
Y	1	STREET LIGHTING	HORNBEAM DRIVE	HEALING	520815.69	410665.79	2013		66862	Urbis	Axia 16 LED 350mA	19 Watts	6.00 Metres	Galvanised Steel	
Y	2	STREET LIGHTING	HORNBEAM DRIVE	HEALING	520849.32	410673.76	2013		66863	Urbis	Axia 16 LED 350mA	19 Watts	6.00 Metres	Galvanised Steel	
Y	3	STREET LIGHTING	HORNBEAM DRIVE	HEALING	520868.81	410699.24	2013		66864	Urbis	Axia 16 LED 350mA	19 Watts	6.00 Metres	Galvanised Steel	
Y	4	STREET LIGHTING	HORNBEAM DRIVE	HEALING	520901.97	410703.71	2013		66865	Urbis	Axia 16 LED 350mA	19 Watts	6.00 Metres	Galvanised Steel	
Y	5	STREET LIGHTING	HORNBEAM DRIVE	HEALING	520920.15	410678.35	2013		66866	Urbis	Axia 16 LED 350mA	19 Watts	6.00 Metres	Galvanised Steel	
Y	6	STREET LIGHTING	HORNBEAM DRIVE	HEALING	520919.96	410701.02	2013		66867	Urbis	Axia 16 LED 350mA	19 Watts	6.00 Metres	Galvanised Steel	
Y	7	STREET LIGHTING	HORNBEAM DRIVE	HEALING	520935.33	410704.49	2013		66868	Urbis	Axia 16 LED 350mA	19 Watts	6.00 Metres	Galvanised Steel	
Y	1	STREET LIGHTING	FOOTPATH BETWEEN SNOWDROP	HEALING	521263.39	410547.58	2000		48779	Urbis	Axia 8 LED 350mA	10 Watts	5.00 Metres	Galvanised Steel	
Y	1	STREET LIGHTING	GRAMPIAN AVENUE	HEALING	520855.37	410727.08	2014	13/08/2014	67660	Urbis	Axia 24 LED 500mA	28 Watts	6.00 Metres	Galvanised Steel	
Y	2	STREET LIGHTING	GRAMPIAN AVENUE	HEALING	520846.17	410739.11	2014	13/08/2014	67661	Urbis	Axia 24 LED 500mA	28 Watts	6.00 Metres	Galvanised Steel	
Y	3	STREET LIGHTING	GRAMPIAN AVENUE	HEALING	520836.47	410767.35	2014	13/08/2014	67662	Urbis	Axia 24 LED 500mA	28 Watts	6.00 Metres	Galvanised Steel	
Y	4	STREET LIGHTING	GRAMPIAN AVENUE	HEALING	520836.65	410793.14	2014	13/08/2014	67663	Urbis	Axia 24 LED 500mA	28 Watts	6.00 Metres	Galvanised Steel	
Y	5	STREET LIGHTING	GRAMPIAN AVENUE	HEALING	520856.21	410823.02	2014	13/08/2014	67664	Urbis	Axia 24 LED 500mA	28 Watts	6.00 Metres	Galvanised Steel	
Y	1	STREET LIGHTING	EXMOOR CLOSE	HEALING	520859.95	410767.35	2014	13/08/2014	67670	Urbis	Axia 24 LED 500mA	28 Watts	6.00 Metres	Galvanised Steel	
Y	2	STREET LIGHTING	EXMOOR CLOSE	HEALING	520887.51	410774.11	2014	13/08/2014	67671	Urbis	Axia 24 LED 500mA	28 Watts	6.00 Metres	Galvanised Steel	
Y	1	STREET LIGHTING	QUANTOCK GARDENS	HEALING	520824.21	410812.88	2014	13/08/2014	67665	Urbis	Axia 24 LED 500mA	28 Watts	6.00 Metres	Galvanised Steel	
Y	2	STREET LIGHTING	QUANTOCK GARDENS	HEALING	520808.91	410795.63	2014	13/08/2014	67666	Urbis	Axia 24 LED 500mA	28 Watts	6.00 Metres	Galvanised Steel	

Y	3	STREET LIGHTING	QUANTOCK GARDENS	HEALING	520804.11	410839.56	2014	13/08/2014	67667	Urbis	Axia 24 LED 500mA	28 Watts	6.00 Metres	Galvanised Steel	
Y	4	STREET LIGHTING	QUANTOCK GARDENS	HEALING	520774.76	410845.96	2014	13/08/2014	67668	Urbis	Axia 24 LED 500mA	28 Watts	6.00 Metres	Galvanised Steel	
Y	5	STREET LIGHTING	QUANTOCK GARDENS	HEALING	520793.43	410863.57	2014	13/08/2014	67669	Urbis	Axia 24 LED 500mA	28 Watts	6.00 Metres	Galvanised Steel	
Y	1	STREET LIGHTING	ST MARGARETS CLOSE	LACEBY	517577.73	414805.93	2014	10/06/2014	62788	1 Urbis LED	Axia 16 LED 500mA	28 Watts	6.00 Metres	Galvanised Steel	
Y	2	STREET LIGHTING	ST MARGARETS CLOSE	LACEBY	521149	406427	2001		57798	1 Urbis LED	Axia 16 LED 500mA	28 Watts	6.00 Metres	Galvanised Steel	
Y	1	STREET LIGHTING	FOOTPATH BETWEEN CEMETERY	LACEBY	521227.67	406556.51	1998		48695	Urbis	Axia 16 LED 350mA	19 Watts	5.00 Metres	Galvanised Steel	
Y	2	STREET LIGHTING	FOOTPATH BETWEEN CEMETERY	LACEBY	521233.33	406514.69	1998		48696	Urbis	Axia 16 LED 350mA	19 Watts	6.00 Metres	Galvanised Steel	
Y	1	STREET LIGHTING	ALTOFT CLOSE	LACEBY	521316.5	406479.08	1987		43107	Urbis	Axia 16 LED 350mA	19 Watts	5.00 Metres	Galvanised Steel	
Y	2	STREET LIGHTING	ALTOFT CLOSE	LACEBY	521324.09	406445.47	1987		43108	Urbis	Axia 16 LED 350mA	19 Watts	5.00 Metres	Galvanised Steel	
Y	1	STREET LIGHTING	AUSTIN GARTH	LACEBY	521493.97	406733.8	2014		62742	Urbis	Axia 16 LED 350mA	19 Watts	6.00 Metres	Galvanised Steel	
Y	2	STREET LIGHTING	AUSTIN GARTH	LACEBY	521485.27	406755.88	2014		62743	Urbis	Axia 16 LED 350mA	19 Watts	6.00 Metres	Galvanised Steel	
Y	3	STREET LIGHTING	AUSTIN GARTH	LACEBY	521486.28	406792.84	2014		62744	Urbis	Axia 16 LED 350mA	19 Watts	6.00 Metres	Galvanised Steel	
Y	1	STREET LIGHTING	AYLESBY LANE	HEALING	521819.04	409894.74	2014		62675	1 Urbis LED	Axia 16 LED 500mA	28 Watts	6.00 Metres	Galvanised Steel	
Y	2	STREET LIGHTING	AYLESBY LANE	HEALING	521803.45	409870.95	2014		43528	1 Urbis LED	Axia 16 LED 500mA	28 Watts	5.00 Metres	Galvanised Steel	
Y	3	STREET LIGHTING	AYLESBY LANE	HEALING	521782.39	409840.87	2014		62676	1 Urbis LED	Axia 16 LED 500mA	28 Watts	6.00 Metres	Galvanised Steel	
Y	4	STREET LIGHTING	AYLESBY LANE	HEALING	521763.15	409811.81	2014		62677	1 Urbis LED	Axia 16 LED 500mA	28 Watts	6.00 Metres	Galvanised Steel	
Y	5	STREET LIGHTING	AYLESBY LANE	HEALING	521739.25	409779	2014		62678	1 Urbis LED	Axia 16 LED 500mA	28 Watts	6.00 Metres	Galvanised Steel	
Y	1	STREET LIGHTING	BUTT LANE	LACEBY	521400.53	406723.91	1997		44993	1 Urbis LED	Teceo 24 LED 500mA	40 Watts	6.00 Metres	Galvanised Steel	
Y	2	STREET LIGHTING	BUTT LANE	LACEBY	521393.04	406751.15	1997		44994	1 Urbis LED	Teceo 24 LED 500mA	40 Watts	6.00 Metres	Galvanised Steel	
Y	3	STREET LIGHTING	BUTT LANE	LACEBY	521361.44	406775.96	1997		44995	1 Urbis LED	Teceo 24 LED 500mA	40 Watts	6.00 Metres	Galvanised Steel	
Y	4	STREET LIGHTING	BUTT LANE	LACEBY	521342.81	406807.56	1997		44996	1 Urbis LED	Teceo 24 LED 500mA	40 Watts	6.00 Metres	Galvanised Steel	
Y	5	STREET LIGHTING	BUTT LANE	LACEBY	521339.98	406844.73	1997		44997	1 Urbis LED	Teceo 24 LED 500mA	40 Watts	6.00 Metres	Galvanised Steel	
Y	6	STREET LIGHTING	BUTT LANE	LACEBY	521354.15	406882.1	1997		44998	1 Urbis LED	Teceo 24 LED 500mA	40 Watts	6.00 Metres	Galvanised Steel	
Y	7	STREET LIGHTING	BUTT LANE	LACEBY	521349.29	406921.18	1997		44999	1 Urbis LED	Teceo 24 LED 500mA	40 Watts	6.00 Metres	Galvanised Steel	
Y	8	STREET LIGHTING	BUTT LANE	LACEBY	521364.69	406957.74	1997		45000	1 Urbis LED	Teceo 24 LED 500mA	40 Watts	6.00 Metres	Galvanised Steel	
Y	9	STREET LIGHTING	BUTT LANE	LACEBY	521358.81	406991.46	1997		45001	1 Urbis LED	Teceo 24 LED 500mA	40 Watts	6.00 Metres	Galvanised Steel	
Y	10	STREET LIGHTING	BUTT LANE	LACEBY	521364.28	407026.81	1997		45002	1 Urbis LED	Teceo 24 LED 500mA	40 Watts	6.00 Metres	Galvanised Steel	
Y	11	STREET LIGHTING	BUTT LANE	LACEBY	521381.09	407063.47	1997		45003	1 Urbis LED	Teceo 24 LED 500mA	40 Watts	6.00 Metres	Galvanised Steel	
Y	12	STREET LIGHTING	BUTT LANE	LACEBY	521386.97	407104.88	1997		45004	1 Urbis LED	Teceo 24 LED 500mA	40 Watts	6.00 Metres	Galvanised Steel	
Y	13	STREET LIGHTING	BUTT LANE	LACEBY	521382.71	407144.28	1997		45005	1 Urbis LED	Teceo 24 LED 500mA	40 Watts	6.00 Metres	Galvanised Steel	
Y	14	STREET LIGHTING	BUTT LANE	LACEBY	521395.68	407180.23	1997		45006	1 Urbis LED	Teceo 24 LED 500mA	40 Watts	6.00 Metres	Galvanised Steel	
Y	15	STREET LIGHTING	BUTT LANE	LACEBY	521397.93	407205.66	2015	30/11/2015	67018	1 Urbis LED	Teceo 16 LED 500mA	52 Watts	8.00 Metres	Galvanised Steel	
Y	16	STREET LIGHTING	BUTT LANE	LACEBY	521403.25	407247.12	2015	30/11/2015	67019	1 Urbis LED	Teceo 16 LED 500mA	52 Watts	8.00 Metres	Galvanised Steel	
Y	17	STREET LIGHTING	BUTT LANE	LACEBY	521407.47	407261.28	2015	30/11/2015	67020	1 Urbis LED	Teceo 16 LED 500mA	52 Watts	8.00 Metres	Galvanised Steel	
Y	18	STREET LIGHTING	BUTT LANE	LACEBY	521392.21	407264.74	2015	30/11/2015	67021	1 Urbis LED	Teceo 16 LED 500mA	52 Watts	8.00 Metres	Galvanised Steel	
Y	19	STREET LIGHTING	BUTT LANE	LACEBY	521409.34	407280.72	2015	30/11/2015	67022	1 Urbis LED	Teceo 16 LED 500mA	52 Watts	8.00 Metres	Galvanised Steel	
Y	20	STREET LIGHTING	BUTT LANE	LACEBY	521389.03	407288.93	2015	09/12/2015	67023	1 Urbis LED	Teceo 16 LED 500mA	52 Watts	8.00 Metres	Galvanised Steel	
Y	21	STREET LIGHTING	BUTT LANE	LACEBY	520909.12	407245.49	2023	17/02/2023	69205	Urbis	Teceo 24 LED 500mA	40 Watts	8.00 Metres	Galvanised Steel	
Y	22	STREET LIGHTING	BUTT LANE	LACEBY	520888	407231	2024	21/05/2024	45008	Urbis	Teceo 24 LED 500mA	40 Watts	8.00 Metres	Galvanised Steel	
Y	23	STREET LIGHTING	BUTT LANE	LACEBY	520857	407239	2000		45009	1 Urbis LED	Teceo 24 LED 500mA	40 Watts	8.00 Metres	Galvanised Steel	
Y	24	STREET LIGHTING	BUTT LANE	LACEBY	520840.07	407251.31	2019	18/01/2019	67277	Urbis	Teceo 24 LED 500mA	40 Watts	8.00 Metres	Galvanised Steel	
Y	1	STREET LIGHTING	CAISTOR ROAD	LACEBY	521451.09	406459.09	2019	03/10/2019	67656	Urbis	Axia 16 LED 500mA	28 Watts	6.00 Metres	Galvanised Steel	
Y	2	STREET LIGHTING	CAISTOR ROAD	LACEBY	521438.49	406424.92	1986		45080	1 Urbis LED	Axia 16 LED 500mA	28 Watts	6.00 Metres	Galvanised Steel	
Y	3	STREET LIGHTING	CAISTOR ROAD	LACEBY	521443.27	406381.65	1986		45081	1 Urbis LED	Axia 16 LED 500mA	28 Watts	6.00 Metres	Galvanised Steel	
Y	4	STREET LIGHTING	CAISTOR ROAD	LACEBY	521434.84	406335.81	1986		45082	1 Urbis LED	Axia 16 LED 500mA	28 Watts	6.00 Metres	Galvanised Steel	
Y	5	STREET LIGHTING	CAISTOR ROAD	LACEBY	521395.75	406324.98	1986		45083	1 Urbis LED	Axia 16 LED 500mA	28 Watts	6.00 Metres	Galvanised Steel	
Y	6	STREET LIGHTING	CAISTOR ROAD	LACEBY	521361.12	406329.94	1986		45084	1 Urbis LED	Axia 16 LED 500mA	28 Watts	6.00 Metres	Galvanised Steel	
Y	7	STREET LIGHTING	CAISTOR ROAD	LACEBY	521313.82	406319.55	2021	20/05/2021	68304	Urbis	Axia 16 LED 350mA	19 Watts	6.00 Metres	Galvanised Steel	
Y	8	STREET LIGHTING	CAISTOR ROAD	LACEBY	521282.14	406297.74	1986		45086	1 Urbis LED	Axia 16 LED 500mA	28 Watts	6.00 Metres	Galvanised Steel	
Y	9	STREET LIGHTING	CAISTOR ROAD	LACEBY	521247.3	406295	1986		45087	1 Urbis LED	Axia 16 LED 500mA	28 Watts	6.00 Metres	Galvanised Steel	
Y	10	STREET LIGHTING	CAISTOR ROAD	LACEBY	521211.45	406276.27	1986		45088	1 Urbis LED	Axia 16 LED 500mA	28 Watts	6.00 Metres	Galvanised Steel	
Y	11	STREET LIGHTING	CAISTOR ROAD	LACEBY	521188.37	406250.45	1986		45089	1 Urbis LED	Axia 16 LED 500mA	28 Watts	6.00 Metres	Galvanised Steel	
Y	12	STREET LIGHTING	CAISTOR ROAD	LACEBY	521155.96	406229.49	1986		45090	1 Urbis LED	Axia 16 LED 500mA	28 Watts	6.00 Metres	Galvanised Steel	
Y	13	STREET LIGHTING	CAISTOR ROAD	LACEBY	521109.38	406207.72	1979		45091	1 Urbis LED	Teceo 48 LED 500mA	79 Watts	10.00 Metres	Galvanised Steel	
Y	14	STREET LIGHTING	CAISTOR ROAD	LACEBY	521088.92	406181.49	1979		45092	1 Urbis LED	Teceo 48 LED 500mA	79 Watts	10.00 Metres	Galvanised Steel	
Y	15	STREET LIGHTING	CAISTOR ROAD	LACEBY	521088.87	406144.81	1979		45093	1 Urbis LED	Teceo 48 LED 500mA	79 Watts	10.00 Metres	Galvanised Steel	
Y	16	STREET LIGHTING	CAISTOR ROAD	LACEBY	521053.84	406155.64	1986		45094	1 Urbis LED	Axia 16 LED 500mA	28 Watts	5.00 Metres	Galvanised Steel	
Y	17	STREET LIGHTING	CAISTOR ROAD	LACEBY	521028.52	406130.84	1986		45095	Urbis	Axia 16 LED 350mA	19 Watts	5.00 Metres	Galvanised Steel	
Y	18	STREET LIGHTING	CAISTOR ROAD	LACEBY	521010.25	406115.72	2021	25/02/2021	68305	Urbis	Axia 24 LED 500mA	28 Watts	6.00 Metres	Galvanised Steel	
Y	19	STREET LIGHTING	CAISTOR ROAD	LACEBY	520959.46	406073.93	1986		45097	Urbis	Axia 16 LED 350mA	19 Watts	5.00 Metres	Galvanised Steel	
Y	20	STREET LIGHTING	CAISTOR ROAD	LACEBY	520930.3	406053.87	1986		45098	Urbis	Axia 16 LED 350mA	19 Watts	5.00 Metres	Galvanised Steel	
Y	21	STREET LIGHTING	CAISTOR ROAD	LACEBY	520892.22	406028.96	1986		45099	Urbis	Axia 16 LED 350mA	19 Watts	5.00 Metres	Galvanised Steel	
Y	22	STREET LIGHTING	CAISTOR ROAD	LACEBY	520864.88	406010.64	1986		45100	Urbis	Axia 16 LED 350mA	19 Watts	5.00 Metres	Galvanised Steel	
Y	23	STREET LIGHTING	CAISTOR ROAD	LACEBY	520831.26	405988.16	1986		45101	Urbis	Axia 16 LED 350mA	19 Watts	5.00 Metres	Galvanised Steel	
Y	24	STREET LIGHTING	CAISTOR ROAD	LACEBY	520802.09	405968.41	1986		45102	Urbis	Axia 16 LED 350mA	19 Watts	5.00 Metres	Galvanised Steel	
Y	25	STREET LIGHTING	CAISTOR ROAD	LACEBY	520773.54	405949.07	1986		45103	Urbis	Axia 16 LED 350mA	19 Watts	5.00 Metres	Galvanised Steel	
Y	26	STREET LIGHTING	CAISTOR ROAD	LACEBY	520740.73	405927.5	1986		45104	Urbis	Axia 16 LED 350mA	19 Watts	5.00 Metres	Galvanised Steel	
Y	1	STREET LIGHTING	CEMETERY CRESCENT	LACEBY	521102.83	406542.04	2014	10/06/2014	62745	Urbis	Axia 16 LED 350mA	19 Watts	6.00 Metres	Galvanised Steel	
Y	2	STREET LIGHTING	CEMETERY CRESCENT	LACEBY	521118.02	406582.48	2014	10/06/2014	62746	Urbis	Axia 16 LED 350mA	19 Watts	6.00 Metres	Galvanised Steel	
Y	3	STREET LIGHTING	CEMETERY CRESCENT	LACEBY	521132.45	406626.72	2014	10/06/2014	62747	Urbis	Axia 16 LED 350mA	19 Watts	6.00 Metres	Galvanised Steel	
Y	1	STREET LIGHTING	CEMETERY ROAD	LACEBY	521398.13	406505.95	1986		45541	Holophane		70 Watts	5.00 Metres	Unknown	
Y	2	STREET LIGHTING	CEMETERY ROAD	LACEBY	521362.43	406500.95	2014		62748	Urbis	Axia 16 LED 350mA	19 Watts	6.00 Metres	Galvanised Steel	
Y	3	STREET LIGHTING	CEMETERY ROAD	LACEBY	521319.52	406499.56	2014		62749	Urbis	Axia 16 LED 350mA	19 Watts	6.00 Metres	Galvanised Steel	
Y	4	STREET LIGHTING	CEMETERY ROAD	LACEBY	521276.49	406486.91	2014		62750	Urbis	Axia 16 LED 350mA	19 Watts	6.00 Metres	Galvanised Steel	
Y	5	STREET LIGHTING	CEMETERY ROAD	LACEBY	521230.16	406491.47	2014		62751	Urbis	Axia 16 LED 350mA	19 Watts	6.00 Metres	Galvanised Steel	
Y	6	STREET LIGHTING	CEMETERY ROAD	LACEBY	521189.02	406486.4	2014		62752	Urbis	Axia 16 LED 350mA	19 Watts	6.00 Metres	Galvanised Steel	
Y	7	STREET LIGHTING	CEMETERY ROAD	LACEBY	521146.24	406496.91	2014		62753	Urbis	Axia 16 LED 350mA	19 Watts	6.00 Metres	Galvanised Steel	
Y	8	STREET LIGHTING	CEMETERY ROAD	LACEBY	521103.84	406491.6	2014		62754	Urbis	Axia 16 LED 350mA	19 Watts	6.00 Metres	Galvanised Steel	
Y	1	STREET LIGHTING	CHURCH LANE	LACEBY	521461.06	406495.92	1980		46022	Urbis	Axia 16 LED 350mA	19 Watts	5.00 Metres	Galvanised Steel	
Y	2	STREET LIGHTING	CHURCH LANE	LACEBY	521459.28	406538.64	1980		46023	Urbis	Axia 16 LED 350mA	19 Watts	5.00 Metres	Galvanised Steel	
Y	3	STREET LIGHTING	CHURCH LANE	LACEBY	521473.34	406578.2	1980		46024	Urbis	Axia 16 LED 350mA	19 Watts	5.00 Metres	Galvanised Steel	
Y	4	STREET LIGHTING	CHURCH LANE	LACEBY	521480.17	406617.94	1980		46025	Urbis	Axia 16 LED 350mA	19 Watts	5.00 Metres	Galvanised Steel	
Y	5	STREET LIGHTING	CHURCH LANE	LACEBY	521528.4	406628.13	1980		46026	Urbis	Axia 16 LED 350mA	19 Watts	5.00 Metres	Galvanised Steel	
Y	6	STREET LIGHTING	CHURCH LANE	LACEBY	521570.3	406639.97	1980		46027	Urbis	Axia 16 LED 350mA	19 Watts	5.00 Metres	Galvanised Steel	
Y	1	STREET LIGHTING	COOPER LANE	LACEBY	521382.63	406675.14	1980		46636	Urbis	Axia 16 LED 350mA	19 Watts	5.00 Metres	Galvanised Steel	
Y	2	STREET LIGHTING	COOPER LANE	LACEBY	521349.86	406686.47	1980		46637	Urbis	Axia 16 LED 350mA	19 Watts	5.00 Metres	Galvanised Steel	
Y	3	STREET LIGHTING	COOPER LANE	LACEBY	521323.09	406689.43	1980		46638	Urbis	Axia 16 LED 350mA	19 Watts	5.00 Metres	Galvanised Steel	
Y	4	STREET LIGHTING	COOPER LANE	LACEBY	521294.13	406691.66	1980		46639	Urbis	Axia 16 LED 350mA	19 Watts	5.00 Metres	Galvanised Steel	
Y	5	STREET LIGHTING	COOPER LANE	LACEBY	521261.52	406693.18	1980		46640	Urbis	Axia 16 LED 350mA	19 Watts	5.00 Metres	Galvanised Steel	
Y	6	STREET LIGHTING	COOPER LANE	LACEBY	521226.13	406692.5	2019	03/10/2019	67657	Urbis	Axia 16 LED 500mA	28 Watts	6.00 Metres	Galvanised Steel	
Y	7	STREET LIGHTING	COOPER LANE	LACEBY	521197.53	406700.47	2013		46642	Urbis	Axia 16 LED 350mA	19 Watts	6.00 Metres	Galvanised Steel	
Y	8	STREET LIGHTING	COOPER LANE	LACEBY	521175.09	406713.58	2023	04/08/2023	69841	Urbis	Axia 16 LED 350mA	19 Watts	8.00 Metres	Galvanised Steel	
Y	9	STREET LIGHTING	COOPER LANE	LACEBY	521141.63	406734.9	2014	10/06/2014	62755	Urbis	Axia 16 LED 350mA	19 Watts	6.00 Metres	Galvanised Steel	
Y	10	STREET LIGHTING	COOPER LANE	LACEBY	521092.21	406748.57	1980		46645	Urbis	Axia 16 LED 350mA	19 Watts	5.00 Metres	Galvanised Steel	
Y	11	STREET LIGHTING	COOPER LANE	LACEBY	521053.93	406764.57	1980		46646	Urbis	Axia 16 LED 350mA	19 Watts	5.00 Metres	Galvanised Steel	
Y	12	STREET LIGHTING	COOPER LANE	LACEBY	521006.54	406788.17	2014	10/06/2014	62756	Urbis	Axia 16 LED 350mA	19 Watts	6.00 Metres	Galvanised Steel	
Y	13	STREET LIGHTING	COOPER LANE	LACEBY	520973.59	406801.83	2004		46648	Urbis	Axia 16 LED 350mA	19 Watts	6.00 Metres	Stainless Steel	
Y	14	STREET LIGHTING	COOPER LANE	LACEBY	520941	406807	2002		46649	Urbis	Axia 16 LED 350mA	19 Watts	6.00 Metres	Stainless Steel	
Y	15	STREET LIGHTING	COOPER LANE	LACEBY	520909	406821	2002		46650	Urbis	Axia 16 LED 350mA	19 Watts	6.00 Metres	Stainless Steel	
Y	16	STREET LIGHTING	COOPER LANE	LACEBY	520878.49	406831.7	2014	10/06/2014	62757	Urbis	Axia 16 LED 350mA	19 Watts	6.00 Metres	Galvanised Steel	
Y	17	STREET LIGHTING	COOPER LANE	LACEBY	520834.34	406847.8	2014	10/06/2014	62758	Urbis	Axia 16 LED 350mA	19 Watts	6.00 Metres	Galvanised Steel	
Y	18	STREET LIGHTING	COOPER LANE	LACEBY	520794.44	406863.3	2014	10/06/2014	62759	Urbis	Axia 16 LED 350mA	19 Watts	6.00 Metres	Galvanised Steel	
Y	1	STREET LIGHTING	GIBRALTAR LANE	LACEBY	521099.51	406804.73	2014		49204	Urbis	Axia 16 LED 350mA	19 Watts	6.00 Metres	Galvanised Steel	
Y	2	STREET LIGHTING	GIBRALTAR LANE	LACEBY	521108.57	406852.96	2014		62762	Urbis	Axia 16 LED 350mA	19 Watts	6.00 Metres	Galvanised Steel	
Y	3	STREET LIGHTING	GIBRALTAR LANE	LACEBY	521116.07	406892.35	2014		62763	Urbis	Axia 16 LED 350mA	19 Watts	6.00 Metres	Galvanised Steel	
Y	4	STREET LIGHTING	GIBRALTAR LANE	LACEBY	521124.98	406939.65	2014		62764	Urbis	Axia 16 LED 350mA	19 Watts	6.00 Metres	Galvanised Steel	
Y	5	STREET LIGHTING	GIBRALTAR LANE	LACEBY	521134.92	406986.64	2004		49208	Urbis	Axia 16 LED 350mA	19 Watts	6.00 Metres	Galvanised Steel	
Y	1	STREET LIGHTING	GRANGE AVENUE	LACEBY	521634.38	406465.23	2003		49421	1 Urbis LED	Axia 16 LED 500mA	28 Watts	5.00 Metres	Stainless Steel	
Y	2	STREET LIGHTING	GRANGE AVENUE	LACEBY	521634.24	406414.59	2014	10/06/2014	62765	1 Urbis LED	Axia 16 LED 500mA	28 Watts	6.00 Metres	Galvanised Steel	
Y	3	STREET LIGHTING	GRANGE AVENUE	LACEBY	521622.04	406366.26	2014	10/06/2014	62766	1 Urbis LED	Axia 16 LED 500mA	28 Watts	6.00 Metres	Galvanised Steel	

Y	4	STREET LIGHTING	GRANGE AVENUE	LACEBY	521586.16	406352.03	2014	10/06/2014	62767	1 Urbis LED	Axia 16 LED 500mA	28 Watts	6.00 Metres	Galvanised Steel	
Y	5	STREET LIGHTING	GRANGE AVENUE	LACEBY	521552.31	406346.5	2010		49425	1 Urbis LED	Axia 16 LED 500mA	28 Watts	6.00 Metres	Steel	
Y	1	STREET LIGHTING	HIGH STREET	LACEBY			2023	19/12/2023	69765	Urbis	AXIA 16 LED 390mA	21 Watts	6.00 Metres	Galvanised Steel	
Y	2	STREET LIGHTING	HIGH STREET	LACEBY	521440.68	406495	1983		50685	1 Urbis LED	Axia 16 LED 500mA	28 Watts	6.00 Metres	Galvanised Steel	
Y	3	STREET LIGHTING	HIGH STREET	LACEBY	521411.33	406530.45	2019	01/11/2019	67653	Urbis	Axia 24 LED 500mA	28 Watts	6.00 Metres	Galvanised Steel	
Y	4	STREET LIGHTING	HIGH STREET	LACEBY	521416.3	406552.11	2019	01/11/2019	67654	Urbis	Axia 24 LED 500mA	28 Watts	6.00 Metres	Galvanised Steel	
Y	5	STREET LIGHTING	HIGH STREET	LACEBY	521400.7	406601.34	2009		50688	1 Urbis LED	Axia 16 LED 500mA	28 Watts	6.00 Metres	Steel	
Y	6	STREET LIGHTING	HIGH STREET	LACEBY	521397.36	406618.6	2009		50689	1 Urbis LED	Axia 16 LED 500mA	28 Watts	6.00 Metres	Steel	
Y	7	STREET LIGHTING	HIGH STREET	LACEBY	521397.84	406642.42	2019	01/11/2019	67655	Urbis	Axia 24 LED 500mA	28 Watts	6.00 Metres	Galvanised Steel	
Y	8	STREET LIGHTING	HIGH STREET	LACEBY	521403.21	406675.45	1983		50691	1 Urbis LED	Axia 16 LED 500mA	28 Watts	5.00 Metres	Galvanised Steel	
Y	1	STREET LIGHTING	KEITH CRESCENT	LACEBY	521142.46	406351.86	2008		51499	Urbis	Axia 16 LED 350mA	19 Watts	6.00 Metres	Steel	
Y	2	STREET LIGHTING	KEITH CRESCENT	LACEBY	521135.59	406377.52	2008		51500	Urbis	Axia 16 LED 350mA	19 Watts	6.00 Metres	Steel	
Y	3	STREET LIGHTING	KEITH CRESCENT	LACEBY	521104.15	406383.25	2008		51501	Urbis	Axia 16 LED 350mA	19 Watts	6.00 Metres	Steel	
Y	4	STREET LIGHTING	KEITH CRESCENT	LACEBY	521076.66	406401.78	2008		51502	Urbis	Axia 16 LED 350mA	19 Watts	6.00 Metres	Steel	
Y	5	STREET LIGHTING	KEITH CRESCENT	LACEBY	521049.16	406412.82	2008		51503	Urbis	Axia 16 LED 350mA	19 Watts	6.00 Metres	Steel	
Y	6	STREET LIGHTING	KEITH CRESCENT	LACEBY	521031.09	406441.57	2008		51504	Urbis	Axia 16 LED 350mA	19 Watts	6.00 Metres	Steel	
Y	7	STREET LIGHTING	KEITH CRESCENT	LACEBY	521026.13	406472.96	2008		51505	Urbis	Axia 16 LED 350mA	19 Watts	6.00 Metres	Steel	
Y	8	STREET LIGHTING	KEITH CRESCENT	LACEBY	521023.36	406505.26	2008		51506	Urbis	Axia 16 LED 350mA	19 Watts	6.00 Metres	Steel	
Y	9	STREET LIGHTING	KEITH CRESCENT	LACEBY	521029.3	406540.17	2008		51507	Urbis	Axia 16 LED 350mA	19 Watts	6.00 Metres	Steel	
Y	10	STREET LIGHTING	KEITH CRESCENT	LACEBY	521019.53	406568.53	2008		51508	Urbis	Axia 16 LED 350mA	19 Watts	6.00 Metres	Steel	
Y	11	STREET LIGHTING	KEITH CRESCENT	LACEBY	520992.13	406578.32	2008		51509	Urbis	Axia 16 LED 350mA	19 Watts	6.00 Metres	Steel	
Y	12	STREET LIGHTING	KEITH CRESCENT	LACEBY	520973.21	406563.68	2008		51510	Urbis	Axia 16 LED 350mA	19 Watts	6.00 Metres	Steel	
Y	13	STREET LIGHTING	KEITH CRESCENT	LACEBY	520942.65	406557.06	2008		51511	Urbis	Axia 16 LED 350mA	19 Watts	6.00 Metres	Steel	
Y	1	STREET LIGHTING	KNIGHTS CLOSE	LACEBY	521229.41	406445.71	2014		62774	1 Urbis LED	Axia 16 LED 500mA	28 Watts	6.00 Metres	Galvanised Steel	
Y	2	STREET LIGHTING	KNIGHTS CLOSE	LACEBY	521223.08	406406.1	2014		62775	1 Urbis LED	Axia 16 LED 500mA	28 Watts	6.00 Metres	Galvanised Steel	
Y	3	STREET LIGHTING	KNIGHTS CLOSE	LACEBY	521219.92	406391.92	2014		51927	Urbis	Axia 8 LED 350mA	10 Watts	6.00 Metres	Galvanised Steel	
Y	1	STREET LIGHTING	LONGMEADOWS DRIVE	LACEBY	521405.71	406976.29	2014	10/06/2014	62776	1 Urbis LED	Axia 16 LED 500mA	28 Watts	6.00 Metres	Galvanised Steel	
Y	2	STREET LIGHTING	LONGMEADOWS DRIVE	LACEBY	521452.91	406970.72	2014	10/06/2014	62777	1 Urbis LED	Axia 16 LED 500mA	28 Watts	6.00 Metres	Galvanised Steel	
Y	3	STREET LIGHTING	LONGMEADOWS DRIVE	LACEBY	521501.11	406973.36	2014	10/06/2014	62778	1 Urbis LED	Axia 16 LED 500mA	28 Watts	6.00 Metres	Galvanised Steel	
Y	4	STREET LIGHTING	LONGMEADOWS DRIVE	LACEBY	521542.72	406976.09	2007		52766	1 Urbis LED	Axia 16 LED 500mA	28 Watts	6.00 Metres	Steel	
Y	1	STREET LIGHTING	NEW CHAPEL LANE	LACEBY	521438.58	406712.99	2014		62779	Urbis	Axia 16 LED 350mA	19 Watts	6.00 Metres	Galvanised Steel	
Y	2	STREET LIGHTING	NEW CHAPEL LANE	LACEBY	521469.77	406719.06	2014		62780	Urbis	Axia 16 LED 350mA	19 Watts	6.00 Metres	Galvanised Steel	
Y	3	STREET LIGHTING	NEW CHAPEL LANE	LACEBY	521496.25	406704.97	2000		54022	Urbis	Axia 16 LED 350mA	19 Watts	5.00 Metres	Galvanised Steel	
Y	1	STREET LIGHTING	OLD CHAPEL LANE	LACEBY	521408.65	406667.5	2014		62781	Urbis	Axia 16 LED 350mA	19 Watts	6.00 Metres	Galvanised Steel	
Y	2	STREET LIGHTING	OLD CHAPEL LANE	LACEBY	521439.66	406673.64	2014		62782	Urbis	Axia 16 LED 350mA	19 Watts	6.00 Metres	Galvanised Steel	
Y	3	STREET LIGHTING	OLD CHAPEL LANE	LACEBY	521473.46	406671.3	2014		62783	Urbis	Axia 16 LED 350mA	19 Watts	6.00 Metres	Galvanised Steel	
Y	4	STREET LIGHTING	OLD CHAPEL LANE	LACEBY	521503.71	406674.59	2014		62784	Urbis	Axia 16 LED 350mA	19 Watts	6.00 Metres	Galvanised Steel	
Y	1	STREET LIGHTING	PHILLIPS LANE	LACEBY	521514.23	406759.12	1991		55419	Urbis	Axia 16 LED 350mA	19 Watts	5.00 Metres	Galvanised Steel	
Y	2	STREET LIGHTING	PHILLIPS LANE	LACEBY	521532.25	406760.13	1991		55420	Urbis	Axia 16 LED 350mA	19 Watts	5.00 Metres	Galvanised Steel	
Y	1	STREET LIGHTING	SPRING LANE	LACEBY	521598.27	406527.57	2014	10/06/2014	62785	Urbis	Axia 16 LED 350mA	19 Watts	6.00 Metres	Galvanised Steel	
Y	2	STREET LIGHTING	SPRING LANE	LACEBY	521635.72	406528.4	2014	10/06/2014	62786	Urbis	Axia 16 LED 350mA	19 Watts	6.00 Metres	Galvanised Steel	
Y	3	STREET LIGHTING	SPRING LANE	LACEBY	521678.65	406512.64	2014	10/06/2014	62787	Urbis	Axia 16 LED 350mA	19 Watts	6.00 Metres	Galvanised Steel	
Y	1	STREET LIGHTING	STANFORD CLOSE	LACEBY	521445.14	406922.58	1995		58119	Urbis	Axia 16 LED 350mA	19 Watts	5.00 Metres	Galvanised Steel	
Y	2	STREET LIGHTING	STANFORD CLOSE	LACEBY	521470.12	406911.99	2014		62789	Urbis	Axia 16 LED 350mA	19 Watts	6.00 Metres	Galvanised Steel	
Y	3	STREET LIGHTING	STANFORD CLOSE	LACEBY	521495.84	406908.14	2014		62790	Urbis	Axia 16 LED 350mA	19 Watts	6.00 Metres	Galvanised Steel	
Y	4	STREET LIGHTING	STANFORD CLOSE	LACEBY	521524.4	406910.07	1995		58122	Urbis	Axia 16 LED 350mA	19 Watts	5.00 Metres	Galvanised Steel	
Y	1	STREET LIGHTING	THE MEAD	LACEBY	521216.73	406682.28	1992		59012	Urbis	Axia 16 LED 350mA	19 Watts	5.00 Metres	Galvanised Steel	
Y	2	STREET LIGHTING	THE MEAD	LACEBY	521219.16	406653.52	1992		59013	Urbis	Axia 16 LED 350mA	19 Watts	5.00 Metres	Galvanised Steel	
Y	3	STREET LIGHTING	THE MEAD	LACEBY	521225.23	406630.33	1992		59014	Urbis	Axia 16 LED 350mA	19 Watts	5.00 Metres	Galvanised Steel	
Y	4	STREET LIGHTING	THE MEAD	LACEBY	521252.17	406622.03	1992		59015	Urbis	Axia 16 LED 350mA	19 Watts	5.00 Metres	Galvanised Steel	
Y	5	STREET LIGHTING	THE MEAD	LACEBY	521251.77	406599.25	1992		59016	Urbis	Axia 16 LED 350mA	19 Watts	5.00 Metres	Galvanised Steel	
Y	6	STREET LIGHTING	THE MEAD	LACEBY	521255.82	406583.35	1992		59017	Urbis	Axia 16 LED 350mA	19 Watts	5.00 Metres	Galvanised Steel	
Y	1	STREET LIGHTING	WHITGIFT CLOSE	LACEBY	521595.36	406411.02	2014	10/06/2014	62792	1 Urbis LED	Axia 16 LED 500mA	28 Watts	6.00 Metres	Galvanised Steel	
Y	2	STREET LIGHTING	WHITGIFT CLOSE	LACEBY	521561.06	406416.75	2006		60667	1 Urbis LED	Axia 16 LED 500mA	28 Watts	5.00 Metres	Stainless Steel	
Y	1	STREET LIGHTING	CHARLES AVENUE	LACEBY	521136.75	406245.73	2008		45635	Urbis	Axia 16 LED 350mA	19 Watts	6.00 Metres	Steel	
Y	2	STREET LIGHTING	CHARLES AVENUE	LACEBY	521119.43	406278.71	2008		45636	Urbis	Axia 16 LED 350mA	19 Watts	6.00 Metres	Steel	
Y	3	STREET LIGHTING	CHARLES AVENUE	LACEBY	521092.45	406295.11	2008		45637	Urbis	Axia 16 LED 350mA	19 Watts	6.00 Metres	Steel	
Y	4	STREET LIGHTING	CHARLES AVENUE	LACEBY	521067.08	406291.96	2008		45638	Urbis	Axia 16 LED 350mA	19 Watts	6.00 Metres	Steel	
Y	5	STREET LIGHTING	CHARLES AVENUE	LACEBY	521077.57	406324.85	2008		45639	Urbis	Axia 16 LED 350mA	19 Watts	6.00 Metres	Steel	
Y	6	STREET LIGHTING	CHARLES AVENUE	LACEBY	521034.07	406312.43	2008		45640	Urbis	Axia 16 LED 350mA	19 Watts	6.00 Metres	Steel	
Y	7	STREET LIGHTING	CHARLES AVENUE	LACEBY	521052.73	406345.46	2008		45641	Urbis	Axia 16 LED 350mA	19 Watts	6.00 Metres	Steel	
Y	8	STREET LIGHTING	CHARLES AVENUE	LACEBY	521031.27	406346.89	2008		45642	Urbis	Axia 16 LED 350mA	19 Watts	6.00 Metres	Steel	
Y	9	STREET LIGHTING	CHARLES AVENUE	LACEBY	521027.23	406366.56	2008		45643	Urbis	Axia 16 LED 350mA	19 Watts	6.00 Metres	Steel	
Y	10	STREET LIGHTING	CHARLES AVENUE	LACEBY	520993.13	406386.37	2008		45644	Urbis	Axia 16 LED 350mA	19 Watts	6.00 Metres	Steel	
Y	11	STREET LIGHTING	CHARLES AVENUE	LACEBY	520976.57	406414.21	2008		45645	Urbis	Axia 16 LED 350mA	19 Watts	6.00 Metres	Steel	
Y	12	STREET LIGHTING	CHARLES AVENUE	LACEBY	520974.5	406455.85	2008		45646	Urbis	Axia 16 LED 350mA	19 Watts	6.00 Metres	Steel	
Y	13	STREET LIGHTING	CHARLES AVENUE	LACEBY	520963.51	406475.16	2008		45647	Urbis	Axia 16 LED 350mA	19 Watts	6.00 Metres	Steel	
Y	14	STREET LIGHTING	CHARLES AVENUE	LACEBY	520944.03	406500.67	2008		45648	Urbis	Axia 16 LED 350mA	19 Watts	6.00 Metres	Steel	
Y	15	STREET LIGHTING	CHARLES AVENUE	LACEBY	520943.91	406530.32	2008		45649	Urbis	Axia 16 LED 350mA	19 Watts	6.00 Metres	Steel	
Y	1	STREET LIGHTING	FIELD CLOSE	LACEBY	521548.65	406498.71	2007		48508	Urbis	Axia 16 LED 350mA	19 Watts	6.00 Metres	Steel	
Y	2	STREET LIGHTING	FIELD CLOSE	LACEBY	521556.25	406535.29	2014	10/06/2014	62760	Urbis	Axia 16 LED 350mA	19 Watts	6.00 Metres	Galvanised Steel	
Y	3	STREET LIGHTING	FIELD CLOSE	LACEBY	521525.81	406540.43	2011		48510	Urbis	Axia 16 LED 350mA	19 Watts	6.00 Metres	Steel	
Y	4	STREET LIGHTING	FIELD CLOSE	LACEBY	521518.81	406554.63	2011		48511	Urbis	Axia 16 LED 350mA	19 Watts	6.00 Metres	Steel	
Y	5	STREET LIGHTING	FIELD CLOSE	LACEBY	521532.62	406558.97	2011		62579	Urbis	Axia 16 LED 350mA	19 Watts	6.00 Metres	Steel	
Y	6	STREET LIGHTING	FIELD CLOSE	LACEBY	521536.19	406574.05	2011		48513	Urbis	Axia 16 LED 350mA	19 Watts	6.00 Metres	Steel	
Y	7	STREET LIGHTING	FIELD CLOSE	LACEBY	521556.31	406575.15	2011		48512	Urbis	Axia 16 LED 350mA	19 Watts	6.00 Metres	Steel	
Y	8	STREET LIGHTING	FIELD CLOSE	LACEBY	521547.61	406560.25	2011		62580	Urbis	Axia 16 LED 350mA	19 Watts	6.00 Metres	Steel	
Y	1	STREET LIGHTING	GRIMSBY ROAD	LACEBY	521474.6	406480.75	1980		49877	1 Urbis LED	Teceo 32 LED 500mA	52 Watts	6.00 Metres	Galvanised Steel	
Y	2	STREET LIGHTING	GRIMSBY ROAD	LACEBY	521474.8	406457.86	1980		49878	1 Urbis LED	Teceo 32 LED 500mA	52 Watts	10.00 Metres	Galvanised Steel	
Y	3	STREET LIGHTING	GRIMSBY ROAD	LACEBY	521509.43	406485.1	1980		49879	1 Urbis LED	Teceo 32 LED 500mA	52 Watts	6.00 Metres	Galvanised Steel	
Y	4	STREET LIGHTING	GRIMSBY ROAD	LACEBY	521552.77	406479.33	1980		49880	1 Urbis LED	Teceo 32 LED 500mA	52 Watts	6.00 Metres	Galvanised Steel	
Y	5	STREET LIGHTING	GRIMSBY ROAD	LACEBY	521590.44	406487.53	1980		49881	1 Urbis LED	Teceo 32 LED 500mA	52 Watts	6.00 Metres	Galvanised Steel	
Y	6	STREET LIGHTING	GRIMSBY ROAD	LACEBY	521633.49	406487.66	1980		49882	1 Urbis LED	Teceo 32 LED 500mA	52 Watts	6.00 Metres	Galvanised Steel	
Y	7	STREET LIGHTING	GRIMSBY ROAD	LACEBY	521670.31	406478.54	1980		49883	1 Urbis LED	Teceo 32 LED 500mA	52 Watts	6.00 Metres	Galvanised Steel	
Y	8	STREET LIGHTING	GRIMSBY ROAD	LACEBY	521715.47	406489.25	1980		49884	1 Urbis LED	Teceo 32 LED 500mA	52 Watts	6.00 Metres	Galvanised Steel	
Y	9	STREET LIGHTING	GRIMSBY ROAD	LACEBY	521742.56	406508.11	1980		49885	1 Urbis LED	Teceo 32 LED 500mA	52 Watts	6.00 Metres	Galvanised Steel	
Y	10	STREET LIGHTING	GRIMSBY ROAD	LACEBY	521770.15	406515.45	1980		49886	1 Urbis LED	Teceo 32 LED 500mA	52 Watts	6.00 Metres	Galvanised Steel	
Y	11	STREET LIGHTING	GRIMSBY ROAD	LACEBY	521802.81	406515.57	1980		49887	1 Urbis LED	Teceo 32 LED 500mA	52 Watts	6.00 Metres	Galvanised Steel	
Y	12	STREET LIGHTING	GRIMSBY ROAD	LACEBY	521831.67	406537.47	1980		49888	1 Urbis LED	Teceo 32 LED 500mA	52 Watts	6.00 Metres	Galvanised Steel	
Y	13	STREET LIGHTING	GRIMSBY ROAD	LACEBY	521856.99	406555.95	1980		49889	1 Urbis LED	Teceo 32 LED 500mA	52 Watts	6.00 Metres	Galvanised Steel	
Y	14	STREET LIGHTING	GRIMSBY ROAD	LACEBY	521883.57	406573.67	1980		49890	1 Urbis LED	Teceo 32 LED 500mA	52 Watts	6.00 Metres	Galvanised Steel	
Y	15	STREET LIGHTING	GRIMSBY ROAD	LACEBY	521919.77	406578.74	1980		49891	1 Urbis LED	Teceo 32 LED 500mA	52 Watts	6.00 Metres	Galvanised Steel	
Y	16	STREET LIGHTING	GRIMSBY ROAD	LACEBY	521954.46	406575.06	2007		49892	1 Urbis LED	Teceo 32 LED 500mA	52 Watts	8.00 Metres	Steel	
Y	17	STREET LIGHTING	GRIMSBY ROAD	LACEBY	521986.35	406569.97	1980		49893	1 Urbis LED	Teceo 32 LED 500mA	52 Watts	6.00 Metres	Galvanised Steel	
Y	18	STREET LIGHTING	GRIMSBY ROAD	LACEBY	522026.68	406561.69	1980		49894	1 Urbis LED	Teceo 32 LED 500mA	52 Watts	10.00 Metres	Galvanised Steel	
Y	19	STREET LIGHTING	GRIMSBY ROAD	LACEBY	522065.34	406557.27	1980		49895	1 Urbis LED	Teceo 32 LED 500mA	52 Watts	10.00 Metres	Galvanised Steel	
Y	20	STREET LIGHTING	GRIMSBY ROAD	LACEBY	522101.61	406561.41	1980		49896	1 Urbis LED	Teceo 32 LED 500mA	52 Watts	10.00 Metres	Galvanised Steel	
Y	21	STREET LIGHTING	GRIMSBY ROAD	LACEBY	522147.82	406572.09	1980		49897	1 Urbis LED	Teceo 32 LED 500mA	52 Watts	10.00 Metres	Galvanised Steel	
Y	1	STREET LIGHTING	HARNEIS CRESCENT	LACEBY	521359.63	407090.52	2009		50216	Urbis	Axia 16 LED 350mA	19 Watts	6.00 Metres	Steel	
Y	2	STREET LIGHTING	HARNEIS CRESCENT	LACEBY	521329.64	407103.63	2009		50217	Urbis	Axia 16 LED 350mA	19 Watts	6.00 Metres	Steel	
Y	3	STREET LIGHTING	HARNEIS CRESCENT	LACEBY	521300.06	407093.96	2009		50218	Urbis	Axia 16 LED 350mA	19 Watts	6.00 Metres	Steel	
Y	4	STREET LIGHTING	HARNEIS CRESCENT	LACEBY	521285.88	407107.75	2009		50219	Urbis	Axia 16 LED 350mA	19 Watts	6.00 Metres	Steel	
Y	5	STREET LIGHTING	HARNEIS CRESCENT	LACEBY	521279.33	407068.47	2005		50220	Urbis	Axia 16 LED 350mA	19 Watts	6.00 Metres	Stainless Steel	
Y	6	STREET LIGHTING	HARNEIS CRESCENT	LACEBY	521282.1	407036.57	2009		50221	Urbis	Axia 16 LED 350mA	19 Watts	6.00 Metres	Steel	
Y	7	STREET LIGHTING	HARNEIS CRESCENT	LACEBY	521266.88	407008.25	2005		50222	Urbis	Axia 16 LED 350mA	19 Watts	6.00 Metres	Stainless Steel	
Y	8	STREET LIGHTING	HARNEIS CRESCENT	LACEBY	521269.51	406973.59	2009		50223	Urbis	Axia 16 LED 350mA	19 Watts	6.00 Metres	Steel	
Y	9	STREET LIGHTING	HARNEIS CRESCENT	LACEBY	521263.14	406940.67	2009		50224	Urbis	Axia 16 LED 350mA	19 Watts	6.00 Metres	Steel	
Y	10	STREET LIGHTING	HARNEIS CRESCENT	LACEBY	521246.13	406910.33	2009		50225	Urbis	Axia 16 LED 350mA	19 Watts	6.00 Metres	Steel	
Y	1	STREET LIGHTING	HAWERBY ROAD	LACEBY	521332.44	406871.04	1996		50337	Urbis	Axia 16 LED 350mA	19 Watts	5.00 Metres	Galvanised Steel	
Y	2	STREET LIGHTING	HAWERBY ROAD	LACEBY	521301.05	406875.91	2014	10/06/2014	62768	Urbis	Axia 16 LED 350mA	19 Watts	6.00 Metres	Galvanised Steel	

Y	3	STREET LIGHTING	HAWERBY ROAD	LACEBY	521271.45	406882.09	2006		50339	Urbis	Axia 16 LED 350mA	19 Watts	6.00 Metres	Stainless Steel	
Y	4	STREET LIGHTING	HAWERBY ROAD	LACEBY	521241.91	406889.88	1996		50340	Urbis	Axia 16 LED 350mA	19 Watts	6.00 Metres	Galvanised Steel	
Y	5	STREET LIGHTING	HAWERBY ROAD	LACEBY	521212.7	406900.06	2006		50341	Urbis	Axia 16 LED 350mA	19 Watts	6.00 Metres	Stainless Steel	
Y	6	STREET LIGHTING	HAWERBY ROAD	LACEBY	521188.74	406909.87	2006		50342	Urbis	Axia 16 LED 350mA	19 Watts	6.00 Metres	Stainless Steel	
Y	7	STREET LIGHTING	HAWERBY ROAD	LACEBY	521155.16	406908.04	2007		50343	Urbis	Axia 16 LED 350mA	19 Watts	6.00 Metres	Steel	
Y	8	STREET LIGHTING	HAWERBY ROAD	LACEBY	521160.5	406864.45	2020	15/12/2020	68219	Urbis	Axia 16 LED 350mA	19 Watts	6.00 Metres	Galvanised Steel	
Y	9	STREET LIGHTING	HAWERBY ROAD	LACEBY	521185.61	406936.87	2014		62769	Urbis	Axia 16 LED 350mA	19 Watts	6.00 Metres	Galvanised Steel	
Y	10	STREET LIGHTING	HAWERBY ROAD	LACEBY	521162.93	406947.3	2008		50346	Urbis	Axia 16 LED 350mA	19 Watts	6.00 Metres	Steel	
Y	11	STREET LIGHTING	HAWERBY ROAD	LACEBY	521170.02	406975.76	2014		62770	Urbis	Axia 16 LED 350mA	19 Watts	6.00 Metres	Galvanised Steel	
Y	12	STREET LIGHTING	HAWERBY ROAD	LACEBY	521193.71	406972.92	2014		62771	Urbis	Axia 16 LED 350mA	19 Watts	6.00 Metres	Galvanised Steel	
Y	13	STREET LIGHTING	HAWERBY ROAD	LACEBY	521191.69	407006.85	2014		62772	Urbis	Axia 16 LED 350mA	19 Watts	6.00 Metres	Galvanised Steel	
Y	14	STREET LIGHTING	HAWERBY ROAD	LACEBY	521213.97	407033.88	1965		50350	Urbis	Axia 16 LED 350mA	19 Watts	5.00 Metres	Concrete	
Y	15	STREET LIGHTING	HAWERBY ROAD	LACEBY	521182.58	407031.25	2000		50351	Urbis	Axia 16 LED 350mA	19 Watts	6.00 Metres	Galvanised Steel	
Y	16	STREET LIGHTING	HAWERBY ROAD	LACEBY	521158.48	407027.4	2014		62773	Urbis	Axia 16 LED 350mA	19 Watts	6.00 Metres	Galvanised Steel	
Y	1	STREET LIGHTING	KENMAR ROAD	LACEBY	521096.07	406321.59	2008		51536	Urbis	Axia 16 LED 350mA	19 Watts	6.00 Metres	Steel	
Y	2	STREET LIGHTING	KENMAR ROAD	LACEBY	521126.56	406327.69	2008		51537	Urbis	Axia 16 LED 350mA	19 Watts	6.00 Metres	Steel	
Y	3	STREET LIGHTING	KENMAR ROAD	LACEBY	521152.02	406334.86	2008		51538	Urbis	Axia 16 LED 350mA	19 Watts	6.00 Metres	Steel	
Y	4	STREET LIGHTING	KENMAR ROAD	LACEBY	521180.16	406352.38	2008		51539	Urbis	Axia 16 LED 350mA	19 Watts	6.00 Metres	Steel	
Y	5	STREET LIGHTING	KENMAR ROAD	LACEBY	521215.04	406360.7	2008		51540	Urbis	Axia 16 LED 350mA	19 Watts	6.00 Metres	Steel	
Y	6	STREET LIGHTING	KENMAR ROAD	LACEBY	521245.24	406364.68	2008		51541	Urbis	Axia 16 LED 350mA	19 Watts	6.00 Metres	Steel	
Y	7	STREET LIGHTING	KENMAR ROAD	LACEBY	521290.34	406364.75	2008		51542	Urbis	Axia 16 LED 350mA	19 Watts	6.00 Metres	Steel	
Y	8	STREET LIGHTING	KENMAR ROAD	LACEBY	521322.82	406382.67	2008		51543	Urbis	Axia 16 LED 350mA	19 Watts	6.00 Metres	Steel	
Y	9	STREET LIGHTING	KENMAR ROAD	LACEBY	521266.5	406346.63	2008		51544	Urbis	Axia 16 LED 350mA	19 Watts	6.00 Metres	Steel	
Y	10	STREET LIGHTING	KENMAR ROAD	LACEBY	521275	406316.39	2008		51545	Urbis	Axia 16 LED 350mA	19 Watts	6.00 Metres	Steel	
Y	1	STREET LIGHTING	MALTBY AVENUE	LACEBY	523324.87	407400.79	1995		53122	1 Urbis LED	Teceo 24 LED 500mA	40 Watts	6.00 Metres	Galvanised Steel	
Y	1	STREET LIGHTING	SEED CLOSE LANE	LACEBY	521438.38	406741.54	2009		56876	1 Urbis LED	Axia 16 LED 500mA	28 Watts	6.00 Metres	Steel	
Y	2	STREET LIGHTING	SEED CLOSE LANE	LACEBY	521447.89	406777.09	1977		56877	1 Urbis LED	Axia 16 LED 500mA	28 Watts	5.00 Metres	Galvanised Steel	
Y	3	STREET LIGHTING	SEED CLOSE LANE	LACEBY	521449.31	406825.7	1977		56878	1 Urbis LED	Axia 16 LED 500mA	28 Watts	5.00 Metres	Galvanised Steel	
Y	4	STREET LIGHTING	SEED CLOSE LANE	LACEBY	521456.81	406861.75	1977		56879	1 Urbis LED	Axia 16 LED 500mA	28 Watts	5.00 Metres	Galvanised Steel	
Y	1	STREET LIGHTING	ST FRANCIS GROVE	LACEBY	521017.8	406594.4	2003		57671	Urbis	Axia 16 LED 350mA	19 Watts	6.00 Metres	Stainless Steel	
Y	2	STREET LIGHTING	ST FRANCIS GROVE	LACEBY	521011.08	406612.08	2003		57672	Urbis	Axia 16 LED 350mA	19 Watts	6.00 Metres	Stainless Steel	
Y	3	STREET LIGHTING	ST FRANCIS GROVE	LACEBY	521002.91	406630.88	2003		57673	Urbis	Axia 16 LED 350mA	19 Watts	6.00 Metres	Stainless Steel	
Y	4	STREET LIGHTING	ST FRANCIS GROVE	LACEBY	520974.08	406644.6	2003		57674	Urbis	Axia 16 LED 350mA	19 Watts	6.00 Metres	Stainless Steel	
Y	5	STREET LIGHTING	ST FRANCIS GROVE	LACEBY	520939.6	406646.88	2003		57675	Urbis	Axia 16 LED 350mA	19 Watts	6.00 Metres	Stainless Steel	
Y	1	STREET LIGHTING	TREVOR CLOSE	LACEBY	521664.29	406370.69	2014	10/06/2014	62791	1 Urbis LED	Axia 16 LED 500mA	28 Watts	6.00 Metres	Galvanised Steel	
Y	2	STREET LIGHTING	TREVOR CLOSE	LACEBY	521704.92	406401.26	2006		59427	1 Urbis LED	Axia 16 LED 500mA	28 Watts	5.00 Metres	Stainless Steel	
Y	1	STREET LIGHTING	ST PETERS GROVE	LACEBY	520925.51	406563.24	2003		57981	1 Urbis LED	Axia 16 LED 500mA	28 Watts	6.00 Metres	Stainless Steel	
Y	2	STREET LIGHTING	ST PETERS GROVE	LACEBY	520898.06	406577.92	2003		57982	1 Urbis LED	Axia 16 LED 500mA	28 Watts	6.00 Metres	Stainless Steel	
Y	3	STREET LIGHTING	ST PETERS GROVE	LACEBY	520877.66	406599.89	2003		57983	1 Urbis LED	Axia 16 LED 500mA	28 Watts	6.00 Metres	Stainless Steel	
Y	4	STREET LIGHTING	ST PETERS GROVE	LACEBY	520863.88	406626.08	2003		57984	1 Urbis LED	Axia 16 LED 500mA	28 Watts	6.00 Metres	Stainless Steel	
Y	5	STREET LIGHTING	ST PETERS GROVE	LACEBY	520861.28	406659.6	2003		57985	1 Urbis LED	Axia 16 LED 500mA	28 Watts	6.00 Metres	Stainless Steel	
Y	6	STREET LIGHTING	ST PETERS GROVE	LACEBY	520845	406670.8	2003		57986	1 Urbis LED	Axia 16 LED 500mA	28 Watts	6.00 Metres	Stainless Steel	
Y	1	STREET LIGHTING	COTTAGERS PLOT ROUNDABOUT	LACEBY	523302.36	407457.88	1995		53865	1 Urbis LED	Teceo 48 LED 700mA	104 Watts	12.00 Metres	Galvanised Steel	
Y	2	STREET LIGHTING	COTTAGERS PLOT ROUNDABOUT	LACEBY	523321.4	407461.12	1995		53866	1 Urbis LED	Teceo 48 LED 700mA	104 Watts	12.00 Metres	Galvanised Steel	
Y	3	STREET LIGHTING	COTTAGERS PLOT ROUNDABOUT	LACEBY	523341.65	407445.62	1995		53867	1 Urbis LED	Teceo 48 LED 700mA	104 Watts	12.00 Metres	Galvanised Steel	
Y	4	STREET LIGHTING	COTTAGERS PLOT ROUNDABOUT	LACEBY	523340.24	407424.16	1995		53868	1 Urbis LED	Teceo 48 LED 700mA	104 Watts	12.00 Metres	Galvanised Steel	
Y	5	STREET LIGHTING	COTTAGERS PLOT ROUNDABOUT	LACEBY	523325.25	407410.79	1995		53869	1 Urbis LED	Teceo 48 LED 700mA	104 Watts	12.00 Metres	Galvanised Steel	
Y	6	STREET LIGHTING	COTTAGERS PLOT ROUNDABOUT	LACEBY	523307.02	407408.76	1995		53870	1 Urbis LED	Teceo 48 LED 700mA	104 Watts	12.00 Metres	Galvanised Steel	
Y	7	STREET LIGHTING	COTTAGERS PLOT ROUNDABOUT	LACEBY	523291.83	407421.12	1995		53871	1 Urbis LED	Teceo 48 LED 700mA	104 Watts	12.00 Metres	Galvanised Steel	
Y	8	STREET LIGHTING	COTTAGERS PLOT ROUNDABOUT	LACEBY	523285.96	407438.94	1995		53872	1 Urbis LED	Teceo 48 LED 700mA	104 Watts	12.00 Metres	Galvanised Steel	
Y	1	STREET LIGHTING	GEORGE BUTLER CLOSE	LACEBY	521755.71	406492.87	2000		49170	Urbis	Axia 16 LED 350mA	19 Watts	5.00 Metres	Galvanised Steel	
Y	2	STREET LIGHTING	GEORGE BUTLER CLOSE	LACEBY	521752.98	406469.4	2000		49171	Urbis	Axia 16 LED 350mA	19 Watts	5.00 Metres	Galvanised Steel	
Y	3	STREET LIGHTING	GEORGE BUTLER CLOSE	LACEBY	521764.32	406447.22	2000		49172	Urbis	Axia 16 LED 350mA	19 Watts	5.00 Metres	Galvanised Steel	
Y	4	STREET LIGHTING	GEORGE BUTLER CLOSE	LACEBY	521793.15	406451.92	2000		49173	Urbis	Axia 16 LED 350mA	19 Watts	5.00 Metres	Galvanised Steel	
Y	5	STREET LIGHTING	GEORGE BUTLER CLOSE	LACEBY	521814.35	406466.13	2000		49174	Urbis	Axia 16 LED 350mA	19 Watts	5.00 Metres	Galvanised Steel	
Y	6	STREET LIGHTING	GEORGE BUTLER CLOSE	LACEBY	521843.77	406470.56	2000		49175	Urbis	Axia 16 LED 350mA	19 Watts	5.00 Metres	Galvanised Steel	
Y	7	STREET LIGHTING	GEORGE BUTLER CLOSE	LACEBY	521829.77	406492.23	2000		49176	Urbis	Axia 16 LED 350mA	19 Watts	5.00 Metres	Galvanised Steel	
Y	1	STREET LIGHTING	ARNOLD CLOSE	LACEBY	521031.05	407097.43	2001		43357	Urbis	Axia 16 LED 350mA	19 Watts	5.00 Metres	Galvanised Steel	
Y	2	STREET LIGHTING	ARNOLD CLOSE	LACEBY	521055.9	407083.8	2001		43358	Urbis	Axia 16 LED 350mA	19 Watts	5.00 Metres	Galvanised Steel	
Y	3	STREET LIGHTING	ARNOLD CLOSE	LACEBY	521086.86	407086.96	2014		43359	Urbis	Axia 16 LED 350mA	19 Watts	6.00 Metres	Galvanised Steel	
Y	1	STREET LIGHTING	BLYTH WAY	LACEBY	520880.5	407190.91	2001		44292	1 Urbis LED	Axia 16 LED 500mA	28 Watts	8.00 Metres	Galvanised Steel	
Y	2	STREET LIGHTING	BLYTH WAY	LACEBY	520901.12	407176.58	2023	15/11/2023	44293	1 Urbis LED	Axia 16 LED 500mA	28 Watts	6.00 Metres	Galvanised Steel	
Y	3	STREET LIGHTING	BLYTH WAY	LACEBY	520925.77	407183.28	2007		44294	1 Urbis LED	Axia 16 LED 500mA	28 Watts	6.00 Metres	Galvanised Steel	
Y	4	STREET LIGHTING	BLYTH WAY	LACEBY	520944.57	407182.52	2000		44295	1 Urbis LED	Axia 16 LED 500mA	28 Watts	6.00 Metres	Galvanised Steel	
Y	5	STREET LIGHTING	BLYTH WAY	LACEBY	520963.33	407177.54	2000		44296	1 Urbis LED	Axia 16 LED 500mA	28 Watts	6.00 Metres	Galvanised Steel	
Y	6	STREET LIGHTING	BLYTH WAY	LACEBY	520987.37	407163.31	2000		44297	1 Urbis LED	Axia 16 LED 500mA	28 Watts	6.00 Metres	Galvanised Steel	
Y	7	STREET LIGHTING	BLYTH WAY	LACEBY	521003.32	407143.87	2000		44298	1 Urbis LED	Axia 16 LED 500mA	28 Watts	6.00 Metres	Galvanised Steel	
Y	8	STREET LIGHTING	BLYTH WAY	LACEBY	521006.89	407098.43	2000		44299	1 Urbis LED	Axia 16 LED 500mA	28 Watts	6.00 Metres	Galvanised Steel	
Y	9	STREET LIGHTING	BLYTH WAY	LACEBY	521011.34	407068.26	2000		44300	1 Urbis LED	Axia 16 LED 500mA	28 Watts	6.00 Metres	Galvanised Steel	
Y	10	STREET LIGHTING	BLYTH WAY	LACEBY	520991.38	407049.37	2000		44301	1 Urbis LED	Axia 16 LED 500mA	28 Watts	6.00 Metres	Galvanised Steel	
Y	11	STREET LIGHTING	BLYTH WAY	LACEBY	520988.46	407018.91	2000		44302	1 Urbis LED	Axia 16 LED 500mA	28 Watts	6.00 Metres	Galvanised Steel	
Y	12	STREET LIGHTING	BLYTH WAY	LACEBY	520966.84	406997.74	2004		44303	1 Urbis LED	Axia 16 LED 500mA	28 Watts	6.00 Metres	Galvanised Steel	
Y	13	STREET LIGHTING	BLYTH WAY	LACEBY	520965.64	406961.72	2007		44304	1 Urbis LED	Axia 16 LED 500mA	28 Watts	6.00 Metres	Galvanised Steel	
Y	14	STREET LIGHTING	BLYTH WAY	LACEBY	520940.48	406942.15	2020	15/12/2020	68220	Urbis	Axia 24 LED 500mA	28 Watts	6.00 Metres	Galvanised Steel	
Y	15	STREET LIGHTING	BLYTH WAY	LACEBY	520928.76	406926.96	2004		44306	1 Urbis LED	Axia 16 LED 500mA	28 Watts	6.00 Metres	Galvanised Steel	
Y	16	STREET LIGHTING	BLYTH WAY	LACEBY	520907.96	406930.27	2004		44307	1 Urbis LED	Axia 16 LED 500mA	28 Watts	6.00 Metres	Galvanised Steel	
Y	17	STREET LIGHTING	BLYTH WAY	LACEBY	520882.57	406951.79	2004		44308	1 Urbis LED	Axia 16 LED 500mA	28 Watts	6.00 Metres	Galvanised Steel	
Y	18	STREET LIGHTING	BLYTH WAY	LACEBY	520883.48	406987.61	2004		44309	1 Urbis LED	Axia 16 LED 500mA	28 Watts	6.00 Metres	Galvanised Steel	
Y	19	STREET LIGHTING	BLYTH WAY	LACEBY	520870.95	407003.15	2004		44310	1 Urbis LED	Axia 16 LED 500mA	28 Watts	6.00 Metres	Galvanised Steel	
Y	20	STREET LIGHTING	BLYTH WAY	LACEBY	520883.93	407015.52	2004		44311	1 Urbis LED	Axia 16 LED 500mA	28 Watts	6.00 Metres	Galvanised Steel	
Y	21	STREET LIGHTING	BLYTH WAY	LACEBY	520897.53	407041.88	2004		44312	1 Urbis LED	Axia 16 LED 500mA	28 Watts	6.00 Metres	Galvanised Steel	
Y	22	STREET LIGHTING	BLYTH WAY	LACEBY	520926.43	407036.39	2007		44313	1 Urbis LED	Axia 16 LED 500mA	28 Watts	6.00 Metres	Galvanised Steel	
Y	23	STREET LIGHTING	BLYTH WAY	LACEBY	520954.68	407048.19	2007		44314	1 Urbis LED	Axia 16 LED 500mA	28 Watts	6.00 Metres	Galvanised Steel	
Y	24	STREET LIGHTING	BLYTH WAY	LACEBY	520970.96	407031.02	2004		44315	1 Urbis LED	Axia 16 LED 500mA	28 Watts	6.00 Metres	Galvanised Steel	
Y	1	STREET LIGHTING	LAURIDSON CLOSE	LACEBY	520979.68	406910.26	2004		52381	Urbis	Axia 16 LED 350mA	19 Watts	5.00 Metres	Galvanised Steel	
Y	2	STREET LIGHTING	LAURIDSON CLOSE	LACEBY	520977.17	406878.6	2004		52382	Urbis	Axia 16 LED 350mA	19 Watts	5.00 Metres	Galvanised Steel	
Y	1	STREET LIGHTING	LEALAND CLOSE	LACEBY	520957.29	406929.31	2004		52409	Urbis	Axia 16 LED 350mA	19 Watts	5.00 Metres	Galvanised Steel	
Y	2	STREET LIGHTING	LEALAND CLOSE	LACEBY	520994.13	406928.22	2004		52410	Urbis	Axia 16 LED 350mA	19 Watts	5.00 Metres	Galvanised Steel	
Y	3	STREET LIGHTING	LEALAND CLOSE	LACEBY	521041.5	406929.31	2004		52411	Urbis	Axia 16 LED 350mA	19 Watts	5.00 Metres	Galvanised Steel	
Y	1	STREET LIGHTING	MARSHALL CLOSE	LACEBY	520919.04	406912.6	2004		53398	Urbis	Axia 16 LED 350mA	19 Watts	5.00 Metres	Galvanised Steel	
Y	2	STREET LIGHTING	MARSHALL CLOSE	LACEBY	520910.77	406889.46	2004		53399	Urbis	Axia 16 LED 350mA	19 Watts	5.00 Metres	Galvanised Steel	
Y	1	STREET LIGHTING	PARKER CLOSE	LACEBY	520871	407040.91	2004		54717	Urbis	Axia 16 LED 350mA	19 Watts	5.00 Metres	Galvanised Steel	
Y	2	STREET LIGHTING	PARKER CLOSE	LACEBY	520851.87	407056.03	2004		54718	Urbis	Axia 16 LED 350mA	19 Watts	5.00 Metres	Galvanised Steel	
Y	1	STREET LIGHTING	BUTT LANE MINI ROUNDABOUT AT	LACEBY	520888.01	407206.72	2000		45011	1 Urbis LED	Teceo 24 LED 500mA	40 Watts	10.00 Metres	Galvanised Steel	
Y	2	STREET LIGHTING	BUTT LANE MINI ROUNDABOUT AT	LACEBY	520866.05	407209.88	2000		45012	1 Urbis LED	Teceo 24 LED 500mA	40 Watts	6.00 Metres	Galvanised Steel	
Y	3	STREET LIGHTING	BUTT LANE MINI ROUNDABOUT AT	LACEBY	520872.37	407226.41	2000		45013	1 Urbis LED	Teceo 24 LED 500mA	40 Watts	10.00 Metres	Galvanised Steel	
Y	1	STREET LIGHTING	CHATSWORTH CLOSE	LACEBY	520860.83	406987.03	2014	15/04/2014	67727	Urbis	Axia 16 LED 350mA	19 Watts	6.00 Metres	Galvanised Steel	
Y	2	STREET LIGHTING	CHATSWORTH CLOSE	LACEBY	520827.44	406968.04	2014	15/04/2014	67728	Urbis	Axia 16 LED 350mA	19 Watts	6.00 Metres	Galvanised Steel	
Y	3	STREET LIGHTING	CHATSWORTH CLOSE	LACEBY	520840.11	406930.86	2014	15/04/2014	67729	Urbis	Axia 16 LED 350mA	19 Watts	6.00 Metres	Galvanised Steel	
Y	1	STREET LIGHTING	FOOTPATH BETWEEN COOPER LANE	LACEBY	520974.83	406819.57	2004		48702	Urbis	Axia 8 LED 350mA	10 Watts	6.00 Metres	Galvanised Steel	
Y	2	STREET LIGHTING	FOOTPATH BETWEEN COOPER LANE	LACEBY	520975.56	406839.11	2004		48703	Urbis	Axia 8 LED 350mA	10 Watts	6.00 Metres	Galvanised Steel	
Y	1	STREET LIGHTING	BUTTERFIELD CLOSE	LACEBY	521344.43	406783.46	1991		45019	Urbis	Axia 16 LED 350mA	19 Watts	5.00 Metres	Galvanised Steel	
Y	2	STREET LIGHTING	BUTTERFIELD CLOSE	LACEBY	521332.89	406762.5	1991		45020	Urbis	Axia 16 LED 350mA	19 Watts	5.00 Metres	Galvanised Steel	
Y	1	STREET LIGHTING	FIELD HEAD ROAD	LACEBY	521037.2	406154.1	2020	10/01/2020	67721	Urbis	Axia 16 LED 350mA	19 Watts	6.00 Metres	Galvanised Steel	
Y	2	STREET LIGHTING	FIELD HEAD ROAD	LACEBY	521018.81	406175.22	1996		48515	Urbis	Axia 16 LED 350mA	19 Watts	5.00 Metres	Galvanised Steel	
Y	3	STREET LIGHTING	FIELD HEAD ROAD	LACEBY	521008.64	406187.69	2020	10/01/2020	67722	Urbis	Axia 16 LED 350mA	19 Watts	6.00 Metres	Galvanised Steel	
Y	4	STREET LIGHTING	FIELD HEAD ROAD	LACEBY	520987.82	406223.83	1996		48517	Urbis	Axia 16 LED 350mA	19 Watts	5.00 Metres	Galvanised Steel	
Y	5	STREET LIGHTING	FIELD HEAD ROAD	LACEBY	520984.38	406256.95	1996		48518	Urbis	Axia 16 LED 350mA	19 Watts	5.00 Metres	Galvanised Steel	
Y	6	STREET LIGHTING	FIELD HEAD ROAD	LACEBY	520968.18	406280.95	1996		48519	Urbis	Axia 16 LED 350mA	19 Watts	5.00 Metres	Galvanised Steel	
Y	7	STREET LIGHTING	FIELD HEAD ROAD	LACEBY	520943.67	406302.62	1996		48520	Urbis	Axia 16 LED 350mA	19 Watts	5.00 Metres	Galvanised Steel	

Y	1	STREET LIGHTING	ROWSON GARDENS	LACEBY	521270.6	406594.69	1995		56359	Urbis	Axia 16 LED 350mA	19 Watts	5.00 Metres	Galvanised Steel	
Y	2	STREET LIGHTING	ROWSON GARDENS	LACEBY	521285.79	406573.83	1995		56360	Urbis	Axia 16 LED 350mA	19 Watts	5.00 Metres	Galvanised Steel	
Y	1	STREET LIGHTING	STOCKWELL	LACEBY	521552.51	406666.46	2008		58495	Urbis	Axia 8 LED 350mA	10 Watts	6.00 Metres	Steel	
Y	2	STREET LIGHTING	STOCKWELL	LACEBY	521524.74	406678.14	2008		58496	Urbis	Axia 8 LED 350mA	10 Watts	6.00 Metres	Steel	
Y	3	STREET LIGHTING	STOCKWELL	LACEBY	521538.7	406694.64	2008		58497	Urbis	Axia 8 LED 350mA	10 Watts	6.00 Metres	Steel	
Y	4	STREET LIGHTING	STOCKWELL	LACEBY	521518.28	406695.53	2008		58498	Urbis	Axia 8 LED 350mA	10 Watts	6.00 Metres	Steel	
Y	1	STREET LIGHTING	WILLOW CLOSE	LACEBY	520846.66	406152.65	1998		60741	Urbis	Axia 16 LED 350mA	19 Watts	5.00 Metres	Galvanised Steel	
Y	2	STREET LIGHTING	WILLOW CLOSE	LACEBY	520851.12	406137.15	1998		60742	Urbis	Axia 16 LED 350mA	19 Watts	5.00 Metres	Galvanised Steel	
Y	3	STREET LIGHTING	WILLOW CLOSE	LACEBY	520825.4	406179.38	1998		60743	Urbis	Axia 16 LED 350mA	19 Watts	5.00 Metres	Galvanised Steel	
Y	4	STREET LIGHTING	WILLOW CLOSE	LACEBY	520815.27	406208.85	1998		60744	Urbis	Axia 16 LED 350mA	19 Watts	5.00 Metres	Galvanised Steel	
Y	5	STREET LIGHTING	WILLOW CLOSE	LACEBY	520810.65	406247.31	2020	15/12/2020	68218	Urbis	Axia 16 LED 350mA	19 Watts	6.00 Metres	Galvanised Steel	
Y	1	STREET LIGHTING	YEWS LANE	LACEBY	520949.95	406271.33	1997		61413	Urbis	Axia 16 LED 350mA	19 Watts	5.00 Metres	Galvanised Steel	
Y	2	STREET LIGHTING	YEWS LANE	LACEBY	520917.34	406266.47	1997		61414	Urbis	Axia 16 LED 350mA	19 Watts	5.00 Metres	Galvanised Steel	
Y	3	STREET LIGHTING	YEWS LANE	LACEBY	520889.39	406249.56	1997		61415	Urbis	Axia 16 LED 350mA	19 Watts	5.00 Metres	Galvanised Steel	
Y	4	STREET LIGHTING	YEWS LANE	LACEBY	520872.58	406256.44	1997		61416	Urbis	Axia 16 LED 350mA	19 Watts	5.00 Metres	Galvanised Steel	
Y	5	STREET LIGHTING	YEWS LANE	LACEBY	520858.61	406230.42	1997		61417	Urbis	Axia 16 LED 350mA	19 Watts	5.00 Metres	Galvanised Steel	
Y	6	STREET LIGHTING	YEWS LANE	LACEBY	520833.09	406214.01	1998		61418	Urbis	Axia 16 LED 350mA	19 Watts	5.00 Metres	Galvanised Steel	
Y	1	STREET LIGHTING	ELM LANE	LACEBY	520976.89	406218.98	1996		47971	Urbis	Axia 16 LED 350mA	19 Watts	5.00 Metres	Galvanised Steel	
Y	2	STREET LIGHTING	ELM LANE	LACEBY	520945.5	406212.29	1996		47972	Urbis	Axia 16 LED 350mA	19 Watts	5.00 Metres	Galvanised Steel	
Y	3	STREET LIGHTING	ELM LANE	LACEBY	520921.4	406195.99	1996		47973	Urbis	Axia 16 LED 350mA	19 Watts	5.00 Metres	Galvanised Steel	
Y	4	STREET LIGHTING	ELM LANE	LACEBY	520910.46	406209.56	1996		47974	Urbis	Axia 16 LED 350mA	19 Watts	5.00 Metres	Galvanised Steel	
Y	1	STREET LIGHTING	BURLEY CLOSE	LACEBY	521011.44	407041.48	2001		44945	Urbis	Axia 16 LED 350mA	19 Watts	5.00 Metres	Galvanised Steel	
Y	2	STREET LIGHTING	BURLEY CLOSE	LACEBY	521040.58	407019.1	2001		44946	Urbis	Axia 16 LED 350mA	19 Watts	5.00 Metres	Galvanised Steel	
Y	3	STREET LIGHTING	BURLEY CLOSE	LACEBY	521064.08	407017.29	2001		44947	Urbis	Axia 16 LED 350mA	19 Watts	5.00 Metres	Galvanised Steel	
Y	4	STREET LIGHTING	BURLEY CLOSE	LACEBY	521086.83	407022.92	2001		44948	Urbis	Axia 16 LED 350mA	19 Watts	5.00 Metres	Galvanised Steel	
Y	1	STREET LIGHTING	BARTON STREET	ASHBY CUM FENBY	524300.92	400493.07	1998		43783	1 Urbis LED	Ampera 48 LED 700mA	104 Watts	10.00 Metres	Galvanised Steel	
Y	2	STREET LIGHTING	BARTON STREET	ASHBY CUM FENBY	524265.98	400522.31	1998		43784	1 Urbis LED	Ampera 48 LED 700mA	104 Watts	10.00 Metres	Galvanised Steel	
Y	3	STREET LIGHTING	BARTON STREET	ASHBY CUM FENBY	524252.82	400560.51	1998		43785	1 Urbis LED	Ampera 48 LED 700mA	104 Watts	10.00 Metres	Galvanised Steel	
Y	4	STREET LIGHTING	BARTON STREET	ASHBY CUM FENBY	524220.41	400584.31	1998		43786	1 Urbis LED	Ampera 48 LED 700mA	104 Watts	10.00 Metres	Galvanised Steel	
Y	5	STREET LIGHTING	BARTON STREET	ASHBY CUM FENBY	524218.9	400613.7	1998		43787	1 Urbis LED	Teceo 48 LED 700mA	104 Watts	10.00 Metres	Galvanised Steel	
Y	6	STREET LIGHTING	BARTON STREET	ASHBY CUM FENBY	524182.68	400614.94	1998		43788	1 Urbis LED	Teceo 48 LED 700mA	104 Watts	10.00 Metres	Galvanised Steel	
Y	7	STREET LIGHTING	BARTON STREET	ASHBY CUM FENBY	524177.22	400654.99	1998		43789	1 Urbis LED	Ampera 48 LED 700mA	104 Watts	10.00 Metres	Galvanised Steel	
Y	8	STREET LIGHTING	BARTON STREET	ASHBY CUM FENBY	524147.73	400684.84	1998		43790	1 Urbis LED	Ampera 48 LED 700mA	104 Watts	10.00 Metres	Galvanised Steel	
Y	9	STREET LIGHTING	BARTON STREET	ASHBY CUM FENBY	524129.38	400724.28	1998		43791	1 Urbis LED	Ampera 48 LED 700mA	104 Watts	10.00 Metres	Galvanised Steel	
Y	10	STREET LIGHTING	BARTON STREET	ASHBY CUM FENBY	524096.32	400749	1998		43792	1 Urbis LED	Ampera 48 LED 700mA	104 Watts	10.00 Metres	Galvanised Steel	
Y	1	STREET LIGHTING	THE LIMES	WALTHAM	525825.6	403805.7	2002		59005	1 Urbis LED	Axia 16 LED 500mA	28 Watts	6.00 Metres	Stainless Steel	
Y	2	STREET LIGHTING	THE LIMES	WALTHAM	525811.24	403836.35	2002		59006	1 Urbis LED	Axia 16 LED 500mA	28 Watts	6.00 Metres	Stainless Steel	
Y	3	STREET LIGHTING	THE LIMES	WALTHAM	525794.2	403862.34	2002		59007	Urbis	Axia 8 LED 350mA	10 Watts	6.00 Metres	Galvanised Steel	
Y	4	STREET LIGHTING	THE LIMES	WALTHAM	525783.09	403885.53	2002		59008	Urbis	Axia 8 LED 350mA	10 Watts	6.00 Metres	Galvanised Steel	
Y	5	STREET LIGHTING	THE LIMES	WALTHAM	525781.68	403903.4	2002		59009	Urbis	Axia 8 LED 350mA	10 Watts	6.00 Metres	Galvanised Steel	
Y	7	STREET LIGHTING	THE LIMES	WALTHAM	525821.87	403853.61	2002		59011	Philips		250 Watts	8.00 Metres	Steel	
Y	1	STREET LIGHTING	FOOTPATH BETWEEN NEVILLE	WALTHAM	525762.72	403911.72	2002		48768	Urbis	Axia 8 LED 350mA	10 Watts	6.00 Metres	Galvanised Steel	
Y	2	STREET LIGHTING	FOOTPATH BETWEEN NEVILLE	WALTHAM	525742.23	403937.4	2002		48769	Urbis	Axia 8 LED 350mA	10 Watts	6.00 Metres	Galvanised Steel	
Y	3	STREET LIGHTING	FOOTPATH BETWEEN NEVILLE	WALTHAM	525723.04	403995.5	2002		48770	Urbis	Axia 8 LED 350mA	10 Watts	6.00 Metres	Galvanised Steel	
Y	1	STREET LIGHTING	KIRKGATE CAR PARK	WALTHAM	526036.48	403881.18	2006		51897	1 Urbis LED	Axia 16 LED 500mA	28 Watts	6.00 Metres	Steel	
Y	2	STREET LIGHTING	KIRKGATE CAR PARK	WALTHAM	526031.8	403867.13	2006		51898	1 Urbis LED	Axia 16 LED 500mA	28 Watts	6.00 Metres	Steel	
Y	3	STREET LIGHTING	KIRKGATE CAR PARK	WALTHAM	526004.91	403856.55	2006		51899	1 Urbis LED	Axia 16 LED 500mA	28 Watts	6.00 Metres	Steel	
Y	4	STREET LIGHTING	KIRKGATE CAR PARK	WALTHAM	526015.73	403840.24	2006		51900	1 Urbis LED	Axia 16 LED 500mA	28 Watts	6.00 Metres	Steel	
Y	5	STREET LIGHTING	KIRKGATE CAR PARK	WALTHAM	526031.74	403833.39	2006		51901	1 Urbis LED	Axia 16 LED 500mA	28 Watts	6.00 Metres	Steel	
Y	1	STREET LIGHTING	BARNOLDBY ROAD / ARCHER ROAD	WALTHAM	525597	403729	2002		43757	1 Urbis LED	Teceo 40 LED 500mA	64 Watts	8.00 Metres	Stainless Steel	
Y	2	STREET LIGHTING	BARNOLDBY ROAD / ARCHER ROAD	WALTHAM	525618	403736	2002		43758	1 Urbis LED	Teceo 40 LED 500mA	64 Watts	8.00 Metres	Stainless Steel	
Y	3	STREET LIGHTING	BARNOLDBY ROAD / ARCHER ROAD	WALTHAM	525630.02	403717.58	1989		43759	1 Urbis LED	Teceo 40 LED 500mA	64 Watts	8.00 Metres	Galvanised Steel	
Y	4	STREET LIGHTING	BARNOLDBY ROAD / ARCHER ROAD	WALTHAM	525606.86	403709.04	1989		43760	1 Urbis LED	Teceo 40 LED 500mA	64 Watts	8.00 Metres	Galvanised Steel	
Y	1	STREET LIGHTING	TANNERY CLOSE	WALTHAM	526135	403678	2007		58745	Urbis	Axia 16 LED 350mA	19 Watts	6.00 Metres	Steel	
Y	2	STREET LIGHTING	TANNERY CLOSE	WALTHAM	526118	403702	2007		58746	Urbis	Axia 16 LED 350mA	19 Watts	6.00 Metres	Steel	
Y	3	STREET LIGHTING	TANNERY CLOSE	WALTHAM	526101	403714	2007		58747	Urbis	Axia 16 LED 350mA	19 Watts	6.00 Metres	Steel	
Y	1	STREET LIGHTING	GOLF COURSE LANE	WALTHAM	526783	402816	2005		49349	DW Windsor	Salisbury 15 LED	30 Watts	5.00 Metres	Steel	
Y	2	STREET LIGHTING	GOLF COURSE LANE	WALTHAM	526800.73	402813.01	2005		49350	DW Windsor	Salisbury 15 LED	30 Watts	5.00 Metres	Steel	
Y	3	STREET LIGHTING	GOLF COURSE LANE	WALTHAM	526813.04	402829.54	2005		49351	DW Windsor	Salisbury 15 LED	30 Watts	5.00 Metres	Steel	
Y	4	STREET LIGHTING	GOLF COURSE LANE	WALTHAM	526798.39	402840.47	2005		49352	DW Windsor	Salisbury 15 LED	30 Watts	5.00 Metres	Steel	
Y	5	STREET LIGHTING	GOLF COURSE LANE	WALTHAM	526775.84	402859.97	2005		49353	DW Windsor	Salisbury 15 LED	30 Watts	5.00 Metres	Steel	
Y	6	STREET LIGHTING	GOLF COURSE LANE	WALTHAM	526821.5	402861.94	2005		49354	DW Windsor	Salisbury 15 LED	30 Watts	5.00 Metres	Steel	
Y	7	STREET LIGHTING	GOLF COURSE LANE	WALTHAM	526844.87	402882.46	2005		49355	DW Windsor	Salisbury 15 LED	30 Watts	5.00 Metres	Steel	
Y	8	STREET LIGHTING	GOLF COURSE LANE	WALTHAM	526875.87	402892.7	2005		49356	DW Windsor	Salisbury 15 LED	30 Watts	5.00 Metres	Steel	
Y	9	STREET LIGHTING	GOLF COURSE LANE	WALTHAM	526909.67	402896.81	2005		49357	DW Windsor	Salisbury 15 LED	30 Watts	5.00 Metres	Steel	
Y	10	STREET LIGHTING	GOLF COURSE LANE	WALTHAM	526936.87	402915.15	2005		49358	DW Windsor	Salisbury 15 LED	30 Watts	5.00 Metres	Steel	
Y	11	STREET LIGHTING	GOLF COURSE LANE	WALTHAM	526952.64	402945.72	2005		49359	DW Windsor	Salisbury 15 LED	30 Watts	5.00 Metres	Steel	
Y	12	STREET LIGHTING	GOLF COURSE LANE	WALTHAM	526948.68	402978.16	2005		49360	DW Windsor	Salisbury 15 LED	30 Watts	5.00 Metres	Steel	
Y	13	STREET LIGHTING	GOLF COURSE LANE	WALTHAM	526928.15	402976.55	2005		49361	DW Windsor	Salisbury 15 LED	30 Watts	5.00 Metres	Steel	
Y	14	STREET LIGHTING	GOLF COURSE LANE	WALTHAM	526908.19	402972.41	2005		49362	DW Windsor	Salisbury 15 LED	30 Watts	5.00 Metres	Steel	
Y	15	STREET LIGHTING	GOLF COURSE LANE	WALTHAM	526934.47	403005.42	2005		49363	DW Windsor	Salisbury 15 LED	30 Watts	5.00 Metres	Steel	
Y	16	STREET LIGHTING	GOLF COURSE LANE	WALTHAM	526932.36	403038.58	2005		49364	DW Windsor	Salisbury 15 LED	30 Watts	5.00 Metres	Steel	
Y	17	STREET LIGHTING	GOLF COURSE LANE	WALTHAM	526912.25	403034.33	2005		49365	DW Windsor	Salisbury 15 LED	30 Watts	5.00 Metres	Steel	
Y	18	STREET LIGHTING	GOLF COURSE LANE	WALTHAM	526890.75	403017.9	2005		49366	DW Windsor	Salisbury 15 LED	30 Watts	5.00 Metres	Steel	
Y	19	STREET LIGHTING	GOLF COURSE LANE	WALTHAM	526913.66	403061.05	2005		49367	DW Windsor	Salisbury 15 LED	30 Watts	5.00 Metres	Steel	
Y	20	STREET LIGHTING	GOLF COURSE LANE	WALTHAM	526901.33	403096.06	2005		49368	DW Windsor	Salisbury 15 LED	30 Watts	5.00 Metres	Steel	
Y	21	STREET LIGHTING	GOLF COURSE LANE	WALTHAM	526888.39	403078.03	2005		49369	DW Windsor	Salisbury 15 LED	30 Watts	5.00 Metres	Steel	
Y	22	STREET LIGHTING	GOLF COURSE LANE	WALTHAM	526865.37	403074.77	2005		49370	DW Windsor	Salisbury 15 LED	30 Watts	5.00 Metres	Steel	
Y	23	STREET LIGHTING	GOLF COURSE LANE	WALTHAM	526879.61	403123.15	2005		49371	DW Windsor	Salisbury 15 LED	30 Watts	5.00 Metres	Steel	
Y	24	STREET LIGHTING	GOLF COURSE LANE	WALTHAM	526878.03	403162.79	2005		49372	DW Windsor	Salisbury 15 LED	30 Watts	5.00 Metres	Steel	
Y	1	STREET LIGHTING	ALDERLEY EDGE	WALTHAM	524985.51	403775.54	1975		42942	Urbis	Axia 16 LED 350mA	19 Watts	5.00 Metres	Galvanised Steel	
Y	2	STREET LIGHTING	ALDERLEY EDGE	WALTHAM	525006.17	403796.91	1975		42943	Urbis	Axia 16 LED 350mA	19 Watts	5.00 Metres	Galvanised Steel	
Y	3	STREET LIGHTING	ALDERLEY EDGE	WALTHAM	525029.91	403817.11	1975		42944	Urbis	Axia 16 LED 350mA	19 Watts	5.00 Metres	Galvanised Steel	
Y	4	STREET LIGHTING	ALDERLEY EDGE	WALTHAM	525057.76	403838.82	1975		42945	Urbis	Axia 16 LED 350mA	19 Watts	5.00 Metres	Galvanised Steel	
Y	5	STREET LIGHTING	ALDERLEY EDGE	WALTHAM	525092.44	403848.63	1975		42946	Urbis	Axia 16 LED 350mA	19 Watts	5.00 Metres	Galvanised Steel	
Y	6	STREET LIGHTING	ALDERLEY EDGE	WALTHAM	525108.65	403828.25	1987		42947	Urbis	Axia 8 LED 350mA	10 Watts	5.00 Metres	Galvanised Steel	
Y	1	STREET LIGHTING	ARCHER ROAD	WALTHAM	525593	403759	2002		43298	Urbis	Axia 16 LED 350mA	19 Watts	6.00 Metres	Stainless Steel	
Y	2	STREET LIGHTING	ARCHER ROAD	WALTHAM	525602.37	403786.13	1984		43299	Urbis	Axia 16 LED 350mA	19 Watts	5.00 Metres	Galvanised Steel	
Y	3	STREET LIGHTING	ARCHER ROAD	WALTHAM	525595.79	403799.49	1984		43300	Urbis	Axia 16 LED 350mA	19 Watts	5.00 Metres	Galvanised Steel	
Y	4	STREET LIGHTING	ARCHER ROAD	WALTHAM	525608.06	403820.44	1984		43301	Urbis	Axia 16 LED 350mA	19 Watts	5.00 Metres	Galvanised Steel	
Y	5	STREET LIGHTING	ARCHER ROAD	WALTHAM	525613.63	403866.26	2022	29/07/2022	68976	Urbis	Axia 16 LED 350mA	19 Watts	6.00 Metres	Galvanised Steel	
Y	6	STREET LIGHTING	ARCHER ROAD	WALTHAM	525603.38	403896.64	1984		43303	Urbis	Axia 16 LED 350mA	19 Watts	5.00 Metres	Galvanised Steel	
Y	7	STREET LIGHTING	ARCHER ROAD	WALTHAM	525581.26	403924.74	1984		43304	Urbis	Axia 16 LED 350mA	19 Watts	6.00 Metres	Galvanised Steel	
Y	8	STREET LIGHTING	ARCHER ROAD	WALTHAM	525556.45	403938.5	2020	20/11/2020	68153	Urbis	Axia 16 LED 350mA	19 Watts	6.00 Metres	Galvanised Steel	
Y	9	STREET LIGHTING	ARCHER ROAD	WALTHAM	525515.94	403943.6	1984		43306	Urbis	Axia 16 LED 350mA	19 Watts	5.00 Metres	Galvanised Steel	
Y	10	STREET LIGHTING	ARCHER ROAD	WALTHAM	525486.2	403937.59	1984		43307	Urbis	Axia 16 LED 350mA	19 Watts	5.00 Metres	Galvanised Steel	
Y	11	STREET LIGHTING	ARCHER ROAD	WALTHAM	525456.22	403925.39	1984		43308	Urbis	Axia 16 LED 350mA	19 Watts	5.00 Metres	Galvanised Steel	
Y	12	STREET LIGHTING	ARCHER ROAD	WALTHAM	525429.01	403910.9	1984		43309	Urbis	Axia 16 LED 350mA	19 Watts	5.00 Metres	Galvanised Steel	
Y	13	STREET LIGHTING	ARCHER ROAD	WALTHAM	525406.85	403899.3	2022	04/01/2022	68796	Urbis	Axia 16 LED 350mA	19 Watts	6.00 Metres	Galvanised Steel	
Y	14	STREET LIGHTING	ARCHER ROAD	WALTHAM	525408.38	403864.83	2022	29/07/2022	69137	Urbis	Axia 16 LED 350mA	19 Watts	6.00 Metres	Galvanised Steel	
Y	15	STREET LIGHTING	ARCHER ROAD	WALTHAM	525430.19	403841.52	2022	04/01/2022	68793	Urbis	Axia 16 LED 350mA	19 Watts	6.00 Metres	Galvanised Steel	
Y	16	STREET LIGHTING	ARCHER ROAD	WALTHAM	525460.15	403844.95	1984		43313	Urbis	Axia 16 LED 350mA	19 Watts	5.00 Metres	Galvanised Steel	
Y	17	STREET LIGHTING	ARCHER ROAD	WALTHAM	525493.44	403860.46	1984		43314	Urbis	Axia 16 LED 350mA	19 Watts	5.00 Metres	Galvanised Steel	
Y	18	STREET LIGHTING	ARCHER ROAD	WALTHAM	525525.19	403867.02	2003		43315	Urbis	Axia 16 LED 350mA	19 Watts	6.00 Metres	Stainless Steel	
Y	19	STREET LIGHTING	ARCHER ROAD	WALTHAM	525539.64	403835.02	1984		43316	Urbis	Axia 16 LED 350mA	19 Watts	5.00 Metres	Galvanised Steel	
Y	20	STREET LIGHTING	ARCHER ROAD	WALTHAM	525535.87	403805.87	2022	04/01/2022	68866	Urbis	Axia 16 LED 350mA	19 Watts	6.00 Metres	Galvanised Steel	
Y	1	STREET LIGHTING	ASCOT ROAD	WALTHAM	525460.54	403768.61	1984		43377	Urbis	Axia 16 LED 350mA	19 Watts	5.00 Metres	Galvanised Steel	
Y	2	STREET LIGHTING	ASCOT ROAD	WALTHAM	525460.42	403740.07	1984		43378	Urbis	Axia 16 LED 350mA	19 Watts	5.00 Metres	Galvanised Steel	
Y	3	STREET LIGHTING	ASCOT ROAD	WALTHAM	525472.44	403711.91	1984		43379	Urbis	Axia 16 LED 350mA	19 Watts	5.00 Metres	Galvanised Steel	
Y	4	STREET LIGHTING	ASCOT ROAD	WALTHAM	525498.54	403702.36		14/02/2025	70191	Urbis	Axia 16 LED 350mA	19 Watts	6.00 Metres	Galvanised Steel	

Y	5	STREET LIGHTING	ASCOT ROAD	WALTHAM	525527.4	403714.71	1984		43381	Urbis	Axia 16 LED 350mA	19 Watts	5.00 Metres	Galvanised Steel	
Y	1	STREET LIGHTING	ASHBOURNE	WALTHAM	525126.5	403781.52	1984		43399	1 Urbis LED	Axia 16 LED 500mA	28 Watts	5.00 Metres	Galvanised Steel	
Y	2	STREET LIGHTING	ASHBOURNE	WALTHAM	525151.56	403757.28	1984		43400	1 Urbis LED	Axia 16 LED 500mA	28 Watts	5.00 Metres	Galvanised Steel	
Y	3	STREET LIGHTING	ASHBOURNE	WALTHAM	525180.17	403769.12	1984		43401	1 Urbis LED	Axia 16 LED 500mA	28 Watts	5.00 Metres	Galvanised Steel	
Y	4	STREET LIGHTING	ASHBOURNE	WALTHAM	525205.99	403798.8	1984		43402	1 Urbis LED	Teceo 24 LED 500mA	40 Watts	5.00 Metres	Galvanised Steel	
Y	5	STREET LIGHTING	ASHBOURNE	WALTHAM	525221.33	403809.54	2017		66607	1 Urbis LED	Axia 16 LED 500mA	28 Watts	6.00 Metres	Galvanised Steel	
Y	1	STREET LIGHTING	BARNOLDBY ROAD	WALTHAM	525852.75	403787.32	1988		43728	1 Urbis LED	Teceo 48 LED 500mA	79 Watts	8.00 Metres	Galvanised Steel	
Y	2	STREET LIGHTING	BARNOLDBY ROAD	WALTHAM	525825.87	403781.49	1989		43729	1 Urbis LED	Teceo 48 LED 500mA	79 Watts	8.00 Metres	Steel	
Y	3	STREET LIGHTING	BARNOLDBY ROAD	WALTHAM	525803.77	403790.33	1989		43730	1 Urbis LED	Teceo 48 LED 500mA	79 Watts	8.00 Metres	Steel	
Y	4	STREET LIGHTING	BARNOLDBY ROAD	WALTHAM	525788.33	403773.78	1989		43731	1 Urbis LED	Teceo 48 LED 500mA	79 Watts	8.00 Metres	Galvanised Steel	
Y	5	STREET LIGHTING	BARNOLDBY ROAD	WALTHAM	525750.98	403760.64	1989		43732	1 Urbis LED	Teceo 48 LED 500mA	79 Watts	8.00 Metres	Galvanised Steel	
Y	6	STREET LIGHTING	BARNOLDBY ROAD	WALTHAM	525722.37	403750.32	1989		43733	1 Urbis LED	Teceo 48 LED 500mA	79 Watts	8.00 Metres	Galvanised Steel	
Y	7	STREET LIGHTING	BARNOLDBY ROAD	WALTHAM	525688.19	403751.93	2006		43734	1 Urbis LED	Teceo 48 LED 500mA	79 Watts	8.00 Metres	Stainless Steel	
Y	8	STREET LIGHTING	BARNOLDBY ROAD	WALTHAM	525664.07	403730.05	1989		43735	1 Urbis LED	Teceo 48 LED 500mA	79 Watts	8.00 Metres	Galvanised Steel	
Y	9	STREET LIGHTING	BARNOLDBY ROAD	WALTHAM	525569.77	403696.19	1989		43736	1 Urbis LED	Teceo 48 LED 500mA	79 Watts	8.00 Metres	Galvanised Steel	
Y	10	STREET LIGHTING	BARNOLDBY ROAD	WALTHAM	525540.78	403685.11	1989		43737	1 Urbis LED	Teceo 48 LED 500mA	79 Watts	8.00 Metres	Galvanised Steel	
Y	11	STREET LIGHTING	BARNOLDBY ROAD	WALTHAM	525506.73	403673.4	1989		43738	1 Urbis LED	Teceo 48 LED 500mA	79 Watts	8.00 Metres	Galvanised Steel	
Y	12	STREET LIGHTING	BARNOLDBY ROAD	WALTHAM	525472.05	403660.93	1989		43739	1 Urbis LED	Teceo 48 LED 500mA	79 Watts	8.00 Metres	Galvanised Steel	
Y	13	STREET LIGHTING	BARNOLDBY ROAD	WALTHAM	525446.1	403651.43	1989		43740	1 Urbis LED	Teceo 48 LED 500mA	79 Watts	8.00 Metres	Galvanised Steel	
Y	14	STREET LIGHTING	BARNOLDBY ROAD	WALTHAM	525410.53	403638.2	1989		43741	1 Urbis LED	Teceo 48 LED 500mA	79 Watts	8.00 Metres	Galvanised Steel	
Y	15	STREET LIGHTING	BARNOLDBY ROAD	WALTHAM	525372.81	403624.97	1989		43742	1 Urbis LED	Teceo 48 LED 500mA	79 Watts	8.00 Metres	Galvanised Steel	
Y	16	STREET LIGHTING	BARNOLDBY ROAD	WALTHAM	525346.1	403615.25	1989		43743	1 Urbis LED	Teceo 48 LED 500mA	79 Watts	8.00 Metres	Galvanised Steel	
Y	17	STREET LIGHTING	BARNOLDBY ROAD	WALTHAM	525313.06	403604.17	1989		43744	1 Urbis LED	Teceo 48 LED 500mA	79 Watts	8.00 Metres	Galvanised Steel	
Y	18	STREET LIGHTING	BARNOLDBY ROAD	WALTHAM	525287.21	403593.73	1989		43745	1 Urbis LED	Teceo 48 LED 500mA	79 Watts	8.00 Metres	Galvanised Steel	
Y	19	STREET LIGHTING	BARNOLDBY ROAD	WALTHAM	525258.6	403579.53	2022	14/10/2022	69045	Urbis	Teceo 48 LED 500mA	79 Watts	8.00 Metres	Galvanised Steel	
Y	20	STREET LIGHTING	BARNOLDBY ROAD	WALTHAM	525221.01	403570.44	1989		43747	1 Urbis LED	Teceo 48 LED 500mA	79 Watts	8.00 Metres	Galvanised Steel	
Y	21	STREET LIGHTING	BARNOLDBY ROAD	WALTHAM	525190.51	403559.49	1988		43748	1 Urbis LED	Teceo 48 LED 500mA	79 Watts	8.00 Metres	Galvanised Steel	
Y	22	STREET LIGHTING	BARNOLDBY ROAD	WALTHAM	525156.1	403556.35	1988		43749	1 Urbis LED	Teceo 48 LED 500mA	79 Watts	8.00 Metres	Galvanised Steel	
Y	23	STREET LIGHTING	BARNOLDBY ROAD	WALTHAM	525128.88	403536.41	1989		43750	1 Urbis LED	Teceo 48 LED 500mA	79 Watts	8.00 Metres	Galvanised Steel	
Y	24	STREET LIGHTING	BARNOLDBY ROAD	WALTHAM	525097.62	403524.7	1988		43751	1 Urbis LED	Teceo 48 LED 500mA	79 Watts	8.00 Metres	Galvanised Steel	
Y	25	STREET LIGHTING	BARNOLDBY ROAD	WALTHAM	525063.32	403512.61	1989		43752	1 Urbis LED	Teceo 48 LED 500mA	79 Watts	8.00 Metres	Galvanised Steel	
Y	26	STREET LIGHTING	BARNOLDBY ROAD	WALTHAM	525034.96	403512.55	1988		43753	1 Urbis LED	Teceo 48 LED 500mA	79 Watts	8.00 Metres	Galvanised Steel	
Y	27	STREET LIGHTING	BARNOLDBY ROAD	WALTHAM	525004.58	403491.34	1989		43754	1 Urbis LED	Teceo 48 LED 500mA	79 Watts	8.00 Metres	Galvanised Steel	
Y	28	STREET LIGHTING	BARNOLDBY ROAD	WALTHAM	524970.48	403477.72	1988		43755	1 Urbis LED	Teceo 48 LED 500mA	79 Watts	8.00 Metres	Galvanised Steel	
Y	29	STREET LIGHTING	BARNOLDBY ROAD	WALTHAM	524938.48	403470.54	1989		43756	1 Urbis LED	Teceo 48 LED 500mA	79 Watts	8.00 Metres	Galvanised Steel	
Y	1	STREET LIGHTING	BRIAN AVENUE	WALTHAM	525699.97	403790.57	2014	30/06/2014	44679	Urbis	Axia 16 LED 350mA	19 Watts	6.00 Metres	Galvanised Steel	
Y	2	STREET LIGHTING	BRIAN AVENUE	WALTHAM	525694.15	403833.61	2014	30/06/2014	44680	Urbis	Axia 16 LED 350mA	19 Watts	6.00 Metres	Galvanised Steel	
Y	3	STREET LIGHTING	BRIAN AVENUE	WALTHAM	525676.55	403866.46	2014	30/06/2014	44681	Urbis	Axia 16 LED 350mA	19 Watts	6.00 Metres	Galvanised Steel	
Y	4	STREET LIGHTING	BRIAN AVENUE	WALTHAM	525667.06	403906.9	2014	30/06/2014	44682	Urbis	Axia 16 LED 350mA	19 Watts	6.00 Metres	Galvanised Steel	
Y	1	STREET LIGHTING	CARNOUSTIE	WALTHAM	525269.81	403740.33	1986		45333	1 Urbis LED	Axia 16 LED 500mA	28 Watts	5.00 Metres	Galvanised Steel	
Y	2	STREET LIGHTING	CARNOUSTIE	WALTHAM	525292.34	403713.18	1986		45334	1 Urbis LED	Axia 16 LED 500mA	28 Watts	5.00 Metres	Galvanised Steel	
Y	3	STREET LIGHTING	CARNOUSTIE	WALTHAM	525306.27	403683.06	1986		45335	1 Urbis LED	Axia 16 LED 500mA	28 Watts	5.00 Metres	Galvanised Steel	
Y	4	STREET LIGHTING	CARNOUSTIE	WALTHAM	525325	403646.29	1986		45336	1 Urbis LED	Axia 16 LED 500mA	28 Watts	5.00 Metres	Galvanised Steel	
Y	1	STREET LIGHTING	CHEAPSIDE	WALTHAM	525890.97	403757.54	1983		61523	1 Urbis LED	Teceo 40 LED 500mA	64 Watts	10.00 Metres	Galvanised Steel	
Y	1	STREET LIGHTING	CHEAPSIDE	WALTHAM	525890.97	403757.54	1983		62055	1 Urbis LED	Teceo 40 LED 500mA	64 Watts	10.00 Metres	Galvanised Steel	
Y	2	STREET LIGHTING	CHEAPSIDE	WALTHAM	525913.63	403765.83	1983		45677	1 Urbis LED	Teceo 40 LED 500mA	64 Watts	8.00 Metres	Galvanised Steel	
Y	3	STREET LIGHTING	CHEAPSIDE	WALTHAM	525940.84	403769.89	1983		45678	1 Urbis LED	Teceo 40 LED 500mA	64 Watts	8.00 Metres	Galvanised Steel	
Y	4	STREET LIGHTING	CHEAPSIDE	WALTHAM	525974.72	403758.19	2020	04/06/2020	67876	Urbis	Teceo 48 LED 700mA	104 Watts	8.00 Metres	Galvanised Steel	
Y	5	STREET LIGHTING	CHEAPSIDE	WALTHAM	526006.4	403743.5	1983		45680	1 Urbis LED	Teceo 48 LED 700mA	104 Watts	8.00 Metres	Galvanised Steel	
Y	6	STREET LIGHTING	CHEAPSIDE	WALTHAM	526016.66	403722.56	1983		45681	1 Urbis LED	Teceo 40 LED 500mA	64 Watts	8.00 Metres	Galvanised Steel	
Y	7	STREET LIGHTING	CHEAPSIDE	WALTHAM	526033.37	403725.46	2016		45682	1 Urbis LED	Teceo 40 LED 500mA	64 Watts	8.00 Metres	Galvanised Steel	
Y	8	STREET LIGHTING	CHEAPSIDE	WALTHAM	526055.64	403700.97	1983		45683	1 Urbis LED	Teceo 40 LED 500mA	64 Watts	8.00 Metres	Galvanised Steel	
Y	9	STREET LIGHTING	CHEAPSIDE	WALTHAM	526073.11	403681.16	1983		45684	1 Urbis LED	Teceo 40 LED 500mA	64 Watts	8.00 Metres	Galvanised Steel	
Y	10	STREET LIGHTING	CHEAPSIDE	WALTHAM	526093.62	403656.03	1983		45685	1 Urbis LED	Teceo 40 LED 500mA	64 Watts	8.00 Metres	Galvanised Steel	
Y	11	STREET LIGHTING	CHEAPSIDE	WALTHAM	526119.31	403627.75	1983		45686	1 Urbis LED	Teceo 40 LED 500mA	64 Watts	8.00 Metres	Galvanised Steel	
Y	12	STREET LIGHTING	CHEAPSIDE	WALTHAM	526142.86	403599.08	1983		45687	1 Urbis LED	Teceo 40 LED 500mA	64 Watts	8.00 Metres	Galvanised Steel	
Y	13	STREET LIGHTING	CHEAPSIDE	WALTHAM	526155.98	403564.55	1983		45688	1 Urbis LED	Teceo 40 LED 500mA	64 Watts	8.00 Metres	Galvanised Steel	
Y	14	STREET LIGHTING	CHEAPSIDE	WALTHAM	526188.38	403545.75	1983		45689	1 Urbis LED	Teceo 48 LED 700mA	104 Watts	8.00 Metres	Galvanised Steel	
Y	15	STREET LIGHTING	CHEAPSIDE	WALTHAM	526207.57	403511.78	2013		45690	1 Urbis LED	Teceo 48 LED 700mA	104 Watts	8.00 Metres	Steel	
Y	16	STREET LIGHTING	CHEAPSIDE	WALTHAM	526242.57	403490.63	2013		45691	1 Urbis LED	Teceo 48 LED 700mA	104 Watts	8.00 Metres	Steel	
Y	17	STREET LIGHTING	CHEAPSIDE	WALTHAM	526262.9	403457.57	2013		45692	1 Urbis LED	Teceo 48 LED 700mA	104 Watts	8.00 Metres	Steel	
Y	18	STREET LIGHTING	CHEAPSIDE	WALTHAM	526301.62	403435.83	2013		45693	1 Urbis LED	Teceo 40 LED 500mA	64 Watts	8.00 Metres	Steel	
Y	19	STREET LIGHTING	CHEAPSIDE	WALTHAM	526319.04	403394.05	2013		45694	1 Urbis LED	Teceo 40 LED 500mA	64 Watts	8.00 Metres	Steel	
Y	20	STREET LIGHTING	CHEAPSIDE	WALTHAM	526336.39	403370.67	2013		45695	1 Urbis LED	Teceo 40 LED 500mA	64 Watts	8.00 Metres	Steel	
Y	21	STREET LIGHTING	CHEAPSIDE	WALTHAM	526365.06	403349.97	2013		45696	1 Urbis LED	Teceo 40 LED 500mA	64 Watts	8.00 Metres	Steel	
Y	22	STREET LIGHTING	CHEAPSIDE	WALTHAM	526383.16	403310.13	2013		45697	1 Urbis LED	Teceo 40 LED 500mA	64 Watts	8.00 Metres	Steel	
Y	23	STREET LIGHTING	CHEAPSIDE	WALTHAM	526409.83	403288.79	1983		45698	1 Urbis LED	Axia 16 LED 500mA	28 Watts	5.00 Metres	Galvanised Steel	
Y	24	STREET LIGHTING	CHEAPSIDE	WALTHAM	526418.31	403264.21	1983		45699	1 Urbis LED	Axia 16 LED 500mA	28 Watts	5.00 Metres	Galvanised Steel	
Y	25	STREET LIGHTING	CHEAPSIDE	WALTHAM	526447.47	403238.59	1983		45700	1 Urbis LED	Axia 16 LED 500mA	28 Watts	5.00 Metres	Galvanised Steel	
Y	26	STREET LIGHTING	CHEAPSIDE	WALTHAM	526468.33	403212.57	1983		45701	1 Urbis LED	Axia 16 LED 500mA	28 Watts	5.00 Metres	Galvanised Steel	
Y	27	STREET LIGHTING	CHEAPSIDE	WALTHAM	526488.18	403186.44	1983		45702	1 Urbis LED	Axia 16 LED 500mA	28 Watts	5.00 Metres	Galvanised Steel	
Y	28	STREET LIGHTING	CHEAPSIDE	WALTHAM	526497.3	403160.62	1983		45703	1 Urbis LED	Axia 16 LED 500mA	28 Watts	5.00 Metres	Galvanised Steel	
Y	29	STREET LIGHTING	CHEAPSIDE	WALTHAM	526520.79	403143.1	1983		45704	1 Urbis LED	Axia 16 LED 500mA	28 Watts	5.00 Metres	Galvanised Steel	
Y	30	STREET LIGHTING	CHEAPSIDE	WALTHAM	526537.13	403122.9	2006		45705	1 Urbis LED	Axia 16 LED 500mA	28 Watts	6.00 Metres	Stainless Steel	
Y	31	STREET LIGHTING	CHEAPSIDE	WALTHAM	526554.66	403099.45	2006		45706	1 Urbis LED	Axia 16 LED 500mA	28 Watts	6.00 Metres	Stainless Steel	
Y	32	STREET LIGHTING	CHEAPSIDE	WALTHAM	526573.21	403075.4	2006		45707	1 Urbis LED	Axia 16 LED 500mA	28 Watts	6.00 Metres	Stainless Steel	
Y	33	STREET LIGHTING	CHEAPSIDE	WALTHAM	526591.04	403052.35	2006		45708	1 Urbis LED	Axia 16 LED 500mA	28 Watts	6.00 Metres	Stainless Steel	
Y	34	STREET LIGHTING	CHEAPSIDE	WALTHAM	526609.83	403027.3	2007		45709	1 Urbis LED	Axia 16 LED 500mA	28 Watts	6.00 Metres	Stainless Steel	
Y	35	STREET LIGHTING	CHEAPSIDE	WALTHAM	526634.63	402993.64	2020	04/05/2020	67840	Urbis	Axia 24 LED 500mA	28 Watts	6.00 Metres	Galvanised Steel	
Y	36	STREET LIGHTING	CHEAPSIDE	WALTHAM	526652.21	402971.39	2006		45711	1 Urbis LED	Axia 16 LED 500mA	28 Watts	6.00 Metres	Stainless Steel	
Y	37	STREET LIGHTING	CHEAPSIDE	WALTHAM	526675.4	402941.14	2006		45712	1 Urbis LED	Axia 16 LED 500mA	28 Watts	6.00 Metres	Stainless Steel	
Y	38	STREET LIGHTING	CHEAPSIDE	WALTHAM	526696.08	402913.5	2006		45713	1 Urbis LED	Axia 16 LED 500mA	28 Watts	6.00 Metres	Stainless Steel	
Y	39	STREET LIGHTING	CHEAPSIDE	WALTHAM	526711.27	402893.34	2006		45714	1 Urbis LED	Axia 16 LED 500mA	28 Watts	6.00 Metres	Stainless Steel	
Y	40	STREET LIGHTING	CHEAPSIDE	WALTHAM	526730.35	402872.28	2023	19/12/2023	69766	Urbis	Axia 24 LED 500mA	28 Watts	6.00 Metres	Galvanised Steel	
Y	41	STREET LIGHTING	CHEAPSIDE	WALTHAM	526748.48	402849.83	2024	02/01/2024	69767	Urbis	Axia 24 LED 500mA	28 Watts	6.00 Metres	Galvanised Steel	
Y	42	STREET LIGHTING	CHEAPSIDE	WALTHAM	526765.84	402822.43	2009		45717	1 Urbis LED	Axia 16 LED 500mA	28 Watts	6.00 Metres	Steel	
Y	43	STREET LIGHTING	CHEAPSIDE	WALTHAM	526775.46	402793.93	1983		45718	1 Urbis LED	Axia 16 LED 500mA	28 Watts	5.00 Metres	Galvanised Steel	
Y	44	STREET LIGHTING	CHEAPSIDE	WALTHAM	526809.13	402752.39	2023	11/10/2023	69308	Urbis	Axia 24 LED 540mA	41 Watts	6.00 Metres	Galvanised Steel	
Y	45	STREET LIGHTING	CHEAPSIDE	WALTHAM	526848.81	402706.78	2023	11/10/2023	69992	Urbis	Axia 24 LED 540mA	41 Watts	6.00 Metres	Galvanised Steel	
Y	1	STREET LIGHTING	CHEESEMANS CLOSE	WALTHAM	526260.84	403633.85	1997		45719	Urbis	Axia 16 LED 350mA	19 Watts	5.00 Metres	Galvanised Steel	
Y	2	STREET LIGHTING	CHEESEMANS CLOSE	WALTHAM	526267.93	403604.29	1997		45720	Urbis	Axia 16 LED 350mA	19 Watts	5.00 Metres	Galvanised Steel	
Y	3	STREET LIGHTING	CHEESEMANS CLOSE	WALTHAM	526257.93	403582.14	1997		45721	Urbis	Axia 16 LED 350mA	19 Watts	5.00 Metres	Galvanised Steel	
Y	1	STREET LIGHTING	CHEESEMANS LANE	WALTHAM	526229.07	403682.26	1997		45722	Urbis	Axia 16 LED 350mA	19 Watts	5.00 Metres	Galvanised Steel	
Y	2	STREET LIGHTING	CHEESEMANS LANE	WALTHAM	526237.93	403659.79	1997		45723	Urbis	Axia 16 LED 350mA	19 Watts	5.00 Metres	Galvanised Steel	
Y	3	STREET LIGHTING	CHEESEMANS LANE	WALTHAM	526268.18	403642.39	1997		45724	Urbis	Axia 16 LED 350mA	19 Watts	5.00 Metres	Galvanised Steel	
Y	4	STREET LIGHTING	CHEESEMANS LANE	WALTHAM	526293.12	403651.95	1997		45725	Urbis	Axia 16 LED 350mA	19 Watts	5.00 Metres	Galvanised Steel	
Y	1	STREET LIGHTING	CHESTNUT ROAD	WALTHAM	525285.41	403581.64	2011		45852	1 Urbis LED	Axia 16 LED 500mA	28 Watts	6.00 Metres	Steel	
Y	2	STREET LIGHTING	CHESTNUT ROAD	WALTHAM	525290.74	403548.61	2011		45853	Urbis	Axia 16 LED 350mA	19 Watts	6.00 Metres	Steel	
Y	3	STREET LIGHTING	CHESTNUT ROAD	WALTHAM	525319.57	403539.08	2011		45854	1 Urbis LED	Axia 16 LED 500mA	28 Watts	6.00 Metres	Steel	
Y	4	STREET LIGHTING	CHESTNUT ROAD	WALTHAM	525346.65	403518.04	2011		45855	1 Urbis LED	Axia 16 LED 500mA	28 Watts	6.00 Metres	Steel	
Y	5	STREET LIGHTING	CHESTNUT ROAD	WALTHAM	525368.88	403493.6	2011		45856	1 Urbis LED	Axia 16 LED 500mA	28 Watts	6.00 Metres	Steel	
Y	6	STREET LIGHTING	CHESTNUT ROAD	WALTHAM	525392.94	403466.62	2011		45857	1 Urbis LED	Axia 16 LED 500mA	28 Watts	6.00 Metres	Steel	
Y	7	STREET LIGHTING	CHESTNUT ROAD	WALTHAM	525415.37	403441.63	2011		45858	1 Urbis LED	Axia 16 LED 500mA	28 Watts	6.00 Metres	Steel	
Y	8	STREET LIGHTING	CHESTNUT ROAD	WALTHAM	525439.55	403416.6	2011		45859	1 Urbis LED	Axia 16 LED 500mA	28 Watts	6.00 Metres	Steel	
Y	9	STREET LIGHTING	CHESTNUT ROAD	WALTHAM	525463.99	403392.98	2011		45860	1 Urbis LED	Axia 16 LED 500mA	28 Watts	6.00 Metres	Steel	
Y	10	STREET LIGHTING	CHESTNUT ROAD	WALTHAM	525490.59	403364.99	2011		45861	1 Urbis LED	Axia 16 LED 500mA	28 Watts	6.00 Metres	Steel	
Y	11	STREET LIGHTING	CHESTNUT ROAD	WALTHAM	525488.35	403332.15	2011		45862	1 Urbis LED	Axia 16 LED 500mA	28 Watts	6.00 Metres	Steel	
Y	12	STREET LIGHTING	CHESTNUT ROAD	WALTHAM	525473.31	403309.93	2011		45863	1 Urbis LED	Axia 16 LED 500mA	28 Watts	6.00 Metres	Steel	
Y	13	STREET LIGHTING	CHESTNUT ROAD	WALTHAM	525438.78	403300.93	2011		45864	1 Urbis LED	Axia 16 LED 500mA	28 Watts	6.00 Metres	Steel	
Y	14	STREET LIGHTING	CHESTNUT ROAD	WALTHAM	525412.67	403314.14	2011		45865	1 Urbis LED	Axia 16 LED 500mA	28 Watts	6.00 Metres	Steel	

Y	15	STREET LIGHTING	CHESTNUT ROAD	WALTHAM	525389.47	403336.88	2011		45866	1 Urbis LED	Axia 16 LED 500mA	28 Watts	6.00 Metres	Steel	
Y	16	STREET LIGHTING	CHESTNUT ROAD	WALTHAM	525373.37	403365.23	2011		45867	1 Urbis LED	Axia 16 LED 500mA	28 Watts	6.00 Metres	Steel	
Y	17	STREET LIGHTING	CHESTNUT ROAD	WALTHAM	525344.86	403380.65	2011		45868	1 Urbis LED	Axia 16 LED 500mA	28 Watts	6.00 Metres	Steel	
Y	18	STREET LIGHTING	CHESTNUT ROAD	WALTHAM	525336.08	403408.45	2011		45869	1 Urbis LED	Axia 16 LED 500mA	28 Watts	6.00 Metres	Steel	
Y	1	STREET LIGHTING	CHURCH LANE	BRADLEY	524363.08	406833.01	1999		45971	1 Urbis LED	Axia 16 LED 500mA	28 Watts	6.00 Metres	Galvanised Steel	
Y	2	STREET LIGHTING	CHURCH LANE	BRADLEY	524326.03	406827.68	2006		45972	1 Urbis LED	Axia 16 LED 500mA	28 Watts	6.00 Metres	Stainless Steel	
Y	3	STREET LIGHTING	CHURCH LANE	BRADLEY	524274.17	406817.01	2014	10/06/2014	62668	Urbis	Axia 16 LED 350mA	19 Watts	6.00 Metres	Galvanised Steel	
Y	4	STREET LIGHTING	CHURCH LANE	BRADLEY	524232.46	406811.85	1956		45974	1 Urbis LED	Axia 16 LED 500mA	28 Watts	5.00 Metres	Galvanised Steel	
Y	5	STREET LIGHTING	CHURCH LANE	BRADLEY	524187.7	406789.07	2014	10/06/2014	62669	Urbis	Axia 16 LED 350mA	19 Watts	6.00 Metres	Galvanised Steel	
Y	6	STREET LIGHTING	CHURCH LANE	BRADLEY	524143.14	406775.3	2018	22/05/2018	45976	Urbis	Axia 16 LED 350mA	19 Watts	6.00 Metres	Galvanised Steel	
Y	7	STREET LIGHTING	CHURCH LANE	BRADLEY	524149.83	406731.7	2014	10/06/2014	62670	Urbis	Axia 16 LED 350mA	19 Watts	6.00 Metres	Galvanised Steel	
Y	8	STREET LIGHTING	CHURCH LANE	BRADLEY	517577.73	414805.93	2014	10/06/2014	62671	Urbis	Axia 16 LED 350mA	19 Watts	6.00 Metres	Galvanised Steel	
Y	9	STREET LIGHTING	CHURCH LANE	BRADLEY	524182.9	406638.08	2003		45979	1 Urbis LED	Axia 16 LED 500mA	28 Watts	6.00 Metres	Stainless Steel	
Y	10	STREET LIGHTING	CHURCH LANE	BRADLEY	524179.05	406595.75	2014	10/06/2014	62672	Urbis	Axia 16 LED 350mA	19 Watts	6.00 Metres	Galvanised Steel	
Y	11	STREET LIGHTING	CHURCH LANE	BRADLEY	524185.02	406554.74	2003		45981	1 Urbis LED	Axia 16 LED 500mA	28 Watts	6.00 Metres	Stainless Steel	
Y	12	STREET LIGHTING	CHURCH LANE	BRADLEY	524203.55	406522.05	2007		45982	1 Urbis LED	Axia 16 LED 500mA	28 Watts	6.00 Metres	Galvanised Steel	
Y	13	STREET LIGHTING	CHURCH LANE	BRADLEY	524233.73	406499.37	2014	10/06/2014	62673	Urbis	Axia 16 LED 350mA	19 Watts	6.00 Metres	Galvanised Steel	
Y	14	STREET LIGHTING	CHURCH LANE	BRADLEY	524264.31	406486.3	2014	10/06/2014	62674	Urbis	Axia 8 LED 350mA	10 Watts	6.00 Metres	Galvanised Steel	
Y	1	STREET LIGHTING	CHURCH LANE	WALTHAM	526188	403922	2002		46041	Urbis	Axia 16 LED 350mA	19 Watts	6.00 Metres	Stainless Steel	
Y	2	STREET LIGHTING	CHURCH LANE	WALTHAM	526207.31	403899.23	2014	30/06/2014	62795	Urbis	Axia 16 LED 350mA	19 Watts	6.00 Metres	Galvanised Steel	
Y	3	STREET LIGHTING	CHURCH LANE	WALTHAM	526212.37	403864.93	2014	30/06/2014	62796	Urbis	Axia 16 LED 350mA	19 Watts	6.00 Metres	Galvanised Steel	
Y	4	STREET LIGHTING	CHURCH LANE	WALTHAM	526232.62	403837.15	2014	30/06/2014	62797	Urbis	Axia 16 LED 350mA	19 Watts	6.00 Metres	Galvanised Steel	
Y	5	STREET LIGHTING	CHURCH LANE	WALTHAM	526242.75	403798.67	2014	30/06/2014	62798	Urbis	Axia 16 LED 350mA	19 Watts	6.00 Metres	Galvanised Steel	
Y	6	STREET LIGHTING	CHURCH LANE	WALTHAM	526243.01	403746.71	2014	30/06/2014	62799	Urbis	Axia 16 LED 350mA	19 Watts	6.00 Metres	Galvanised Steel	
Y	1	STREET LIGHTING	CHURCH VIEW	WALTHAM	526106.88	403970.41	2014	30/06/2014	62800	1 Urbis LED	Axia 16 LED 500mA	28 Watts	6.00 Metres	Galvanised Steel	
Y	2	STREET LIGHTING	CHURCH VIEW	WALTHAM	526099.03	404007.63	1987		46076	1 Urbis LED	Axia 16 LED 500mA	28 Watts	5.00 Metres	Galvanised Steel	
Y	1	STREET LIGHTING	CROSS STREET	WALTHAM	526215.66	403828.98	1992		47106	Urbis	Axia 16 LED 350mA	19 Watts	6.00 Metres	Galvanised Steel	
Y	2	STREET LIGHTING	CROSS STREET	WALTHAM	526184.14	403823.73	1992		47107	Urbis	Axia 16 LED 350mA	19 Watts	6.00 Metres	Galvanised Steel	
Y	3	STREET LIGHTING	CROSS STREET	WALTHAM	526155.16	403826.58	1992		47108	Urbis	Axia 16 LED 350mA	19 Watts	6.00 Metres	Galvanised Steel	
Y	1	STREET LIGHTING	DANESFIELD AVENUE	WALTHAM	526404.4	404484.63	2013		47284	1 Urbis LED	Axia 16 LED 500mA	28 Watts	6.00 Metres	Steel	
Y	2	STREET LIGHTING	DANESFIELD AVENUE	WALTHAM	526391.49	404460.17	2013		47285	1 Urbis LED	Axia 16 LED 500mA	28 Watts	6.00 Metres	Steel	
Y	3	STREET LIGHTING	DANESFIELD AVENUE	WALTHAM	526402.2	404424.18	2013		47286	1 Urbis LED	Axia 16 LED 500mA	28 Watts	6.00 Metres	Steel	
Y	4	STREET LIGHTING	DANESFIELD AVENUE	WALTHAM	526388.92	404385.72	2013		47287	1 Urbis LED	Axia 16 LED 500mA	28 Watts	6.00 Metres	Steel	
Y	5	STREET LIGHTING	DANESFIELD AVENUE	WALTHAM	526399.45	404347.71	2013		47288	1 Urbis LED	Axia 16 LED 500mA	28 Watts	6.00 Metres	Steel	
Y	6	STREET LIGHTING	DANESFIELD AVENUE	WALTHAM	526386.54	404317.4	2013		47289	1 Urbis LED	Axia 16 LED 500mA	28 Watts	6.00 Metres	Steel	
Y	7	STREET LIGHTING	DANESFIELD AVENUE	WALTHAM	526397.62	404281.86	2013		47290	1 Urbis LED	Axia 16 LED 500mA	28 Watts	6.00 Metres	Steel	
Y	8	STREET LIGHTING	DANESFIELD AVENUE	WALTHAM	526396.71	404253.93	2013		47291	1 Urbis LED	Axia 16 LED 500mA	28 Watts	6.00 Metres	Steel	
Y	9	STREET LIGHTING	DANESFIELD AVENUE	WALTHAM	526393.68	404208.05	2013		47292	1 Urbis LED	Axia 16 LED 500mA	28 Watts	6.00 Metres	Steel	
Y	10	STREET LIGHTING	DANESFIELD AVENUE	WALTHAM	526377.29	404177.18	2013		47293	1 Urbis LED	Axia 16 LED 500mA	28 Watts	6.00 Metres	Steel	
Y	11	STREET LIGHTING	DANESFIELD AVENUE	WALTHAM	526377.75	404137.99	2013		47294	1 Urbis LED	Axia 16 LED 500mA	28 Watts	6.00 Metres	Steel	
Y	12	STREET LIGHTING	DANESFIELD AVENUE	WALTHAM	526367.22	404108.04	2013		47295	1 Urbis LED	Axia 16 LED 500mA	28 Watts	6.00 Metres	Steel	
Y	13	STREET LIGHTING	DANESFIELD AVENUE	WALTHAM	526358.15	404077.63	2013		47296	1 Urbis LED	Axia 16 LED 500mA	28 Watts	6.00 Metres	Steel	
Y	14	STREET LIGHTING	DANESFIELD AVENUE	WALTHAM	526372.89	404047.32	2013		47297	1 Urbis LED	Axia 16 LED 500mA	28 Watts	6.00 Metres	Steel	
Y	1	STREET LIGHTING	DOROTHY AVENUE	WALTHAM	526351.5	404120.1	2013		47507	Urbis	Axia 16 LED 350mA	19 Watts	6.00 Metres	Steel	
Y	2	STREET LIGHTING	DOROTHY AVENUE	WALTHAM	526323.4	404102.4	2013		47508	Urbis	Axia 16 LED 350mA	19 Watts	6.00 Metres	Steel	
Y	3	STREET LIGHTING	DOROTHY AVENUE	WALTHAM	526300.9	404100.2	2013		47509	Urbis	Axia 16 LED 350mA	19 Watts	6.00 Metres	Steel	
Y	4	STREET LIGHTING	DOROTHY AVENUE	WALTHAM	526287.7	404083.5	2013		47510	Urbis	Axia 16 LED 350mA	19 Watts	6.00 Metres	Steel	
Y	1	STREET LIGHTING	DRURY CLOSE	WALTHAM	525012.04	403943.46	1985		47559	Urbis	Axia 16 LED 350mA	19 Watts	5.00 Metres	Galvanised Steel	
Y	2	STREET LIGHTING	DRURY CLOSE	WALTHAM	525016.04	403978.44	2021	09/09/2021	68702	Urbis	Axia 16 LED 350mA	19 Watts	6.00 Metres	Galvanised Steel	
Y	1	STREET LIGHTING	ELM ROAD	WALTHAM	526410.11	403340.42	2014	30/06/2014	62802	1 Urbis LED	Axia 16 LED 500mA	28 Watts	6.00 Metres	Galvanised Steel	
Y	2	STREET LIGHTING	ELM ROAD	WALTHAM	526430.49	403361.43	2014	30/06/2014	62803	1 Urbis LED	Axia 16 LED 500mA	28 Watts	6.00 Metres	Galvanised Steel	
Y	3	STREET LIGHTING	ELM ROAD	WALTHAM	526454.67	403375.8	2014	30/06/2014	62804	1 Urbis LED	Axia 16 LED 500mA	28 Watts	6.00 Metres	Galvanised Steel	
Y	4	STREET LIGHTING	ELM ROAD	WALTHAM	526480.24	403400.8	2014	30/06/2014	62805	1 Urbis LED	Axia 16 LED 500mA	28 Watts	6.00 Metres	Galvanised Steel	
Y	1	STREET LIGHTING	ELSHAM DRIVE	WALTHAM	525476.55	403286.93	2011		47997	1 Urbis LED	Axia 16 LED 500mA	28 Watts	6.00 Metres	Steel	
Y	2	STREET LIGHTING	ELSHAM DRIVE	WALTHAM	525496.59	403255.99	2011		47998	1 Urbis LED	Axia 16 LED 500mA	28 Watts	6.00 Metres	Steel	
Y	3	STREET LIGHTING	ELSHAM DRIVE	WALTHAM	525528.94	403244.73	2011		47999	1 Urbis LED	Axia 16 LED 500mA	28 Watts	6.00 Metres	Steel	
Y	4	STREET LIGHTING	ELSHAM DRIVE	WALTHAM	525554.54	403217.35	2011		48000	1 Urbis LED	Axia 16 LED 500mA	28 Watts	6.00 Metres	Steel	
Y	5	STREET LIGHTING	ELSHAM DRIVE	WALTHAM	525590.09	403230.58	2011		48001	1 Urbis LED	Axia 16 LED 500mA	28 Watts	6.00 Metres	Steel	
Y	6	STREET LIGHTING	ELSHAM DRIVE	WALTHAM	525582.33	403199.04	2011		48002	1 Urbis LED	Axia 16 LED 500mA	28 Watts	6.00 Metres	Steel	
Y	1	STREET LIGHTING	FAIRWAY	WALTHAM	526004.77	403931.25	2007		48322	Urbis	Axia 16 LED 350mA	19 Watts	6.00 Metres	Steel	
Y	2	STREET LIGHTING	FAIRWAY	WALTHAM	526002.1	403959.06	2007		48323	Urbis	Axia 16 LED 350mA	19 Watts	6.00 Metres	Steel	
Y	3	STREET LIGHTING	FAIRWAY	WALTHAM	526006.81	403990.12	2007		48324	Urbis	Axia 16 LED 350mA	19 Watts	6.00 Metres	Steel	
Y	4	STREET LIGHTING	FAIRWAY	WALTHAM	525997.11	404014.34	2007		48325	Urbis	Axia 16 LED 350mA	19 Watts	6.00 Metres	Steel	
Y	5	STREET LIGHTING	FAIRWAY	WALTHAM	525994.25	404043.05	2007		48326	Urbis	Axia 16 LED 350mA	19 Watts	6.00 Metres	Steel	
Y	6	STREET LIGHTING	FAIRWAY	WALTHAM	525991.53	404073.27	2007		48327	Urbis	Axia 16 LED 350mA	19 Watts	6.00 Metres	Steel	
Y	7	STREET LIGHTING	FAIRWAY	WALTHAM	525989.54	404102.69	2007		48328	Urbis	Axia 16 LED 350mA	19 Watts	6.00 Metres	Steel	
Y	8	STREET LIGHTING	FAIRWAY	WALTHAM	525999.47	404136.92	2007		48329	Urbis	Axia 16 LED 350mA	19 Watts	6.00 Metres	Steel	
Y	9	STREET LIGHTING	FAIRWAY	WALTHAM	525998.57	404173.01	2007		48330	Urbis	Axia 16 LED 350mA	19 Watts	6.00 Metres	Steel	
Y	10	STREET LIGHTING	FAIRWAY	WALTHAM	526007.27	404203.2	2007		48331	Urbis	Axia 16 LED 350mA	19 Watts	6.00 Metres	Steel	
Y	11	STREET LIGHTING	FAIRWAY	WALTHAM	526024.85	404228.58	2007		48332	Urbis	Axia 16 LED 350mA	19 Watts	6.00 Metres	Steel	
Y	12	STREET LIGHTING	FAIRWAY	WALTHAM	526033.02	404255.56	2007		48333	Urbis	Axia 16 LED 350mA	19 Watts	6.00 Metres	Steel	
Y	13	STREET LIGHTING	FAIRWAY	WALTHAM	526038.83	404286.58	2007		48334	Urbis	Axia 16 LED 350mA	19 Watts	6.00 Metres	Steel	
Y	14	STREET LIGHTING	FAIRWAY	WALTHAM	526055.31	404314.26	2007		48335	Urbis	Axia 16 LED 350mA	19 Watts	6.00 Metres	Steel	
Y	15	STREET LIGHTING	FAIRWAY	WALTHAM	526074.64	404339.11	2007		48336	Urbis	Axia 16 LED 350mA	19 Watts	6.00 Metres	Steel	
Y	16	STREET LIGHTING	FAIRWAY	WALTHAM	526102	404355.52	2007		48337	Urbis	Axia 16 LED 350mA	19 Watts	6.00 Metres	Steel	
Y	17	STREET LIGHTING	FAIRWAY	WALTHAM	526117.74	404379.88	2007		48338	Urbis	Axia 16 LED 350mA	19 Watts	6.00 Metres	Steel	
Y	18	STREET LIGHTING	FAIRWAY	WALTHAM	526148.23	404389.63	2007		48339	Urbis	Axia 16 LED 350mA	19 Watts	6.00 Metres	Steel	
Y	19	STREET LIGHTING	FAIRWAY	WALTHAM	526175.15	404403.3	2007		48340	Urbis	Axia 16 LED 350mA	19 Watts	6.00 Metres	Steel	
Y	20	STREET LIGHTING	FAIRWAY	WALTHAM	526198.22	404422.92	2007		48341	Urbis	Axia 16 LED 350mA	19 Watts	6.00 Metres	Steel	
Y	21	STREET LIGHTING	FAIRWAY	WALTHAM	526225.82	404424.77	2007		48342	Urbis	Axia 16 LED 350mA	19 Watts	6.00 Metres	Steel	
Y	22	STREET LIGHTING	FAIRWAY	WALTHAM	526252.3	404444.96	2007		48343	Urbis	Axia 16 LED 350mA	19 Watts	6.00 Metres	Steel	
Y	23	STREET LIGHTING	FAIRWAY	WALTHAM	526287.55	404449.84	2007		48344	Urbis	Axia 16 LED 350mA	19 Watts	6.00 Metres	Steel	
Y	24	STREET LIGHTING	FAIRWAY	WALTHAM	526315.3	404470.79	2007		48345	Urbis	Axia 16 LED 350mA	19 Watts	6.00 Metres	Steel	
Y	25	STREET LIGHTING	FAIRWAY	WALTHAM	526348.09	404475.06	2007		48346	Urbis	Axia 16 LED 350mA	19 Watts	6.00 Metres	Steel	
Y	26	STREET LIGHTING	FAIRWAY	WALTHAM	526372.37	404494.05	2007		48347	Urbis	Axia 16 LED 350mA	19 Watts	6.00 Metres	Steel	
Y	27	STREET LIGHTING	FAIRWAY	WALTHAM	526400.82	404505.79	2007		48348	Urbis	Axia 16 LED 350mA	19 Watts	6.00 Metres	Steel	
Y	28	STREET LIGHTING	FAIRWAY	WALTHAM	526430.73	404504.09	2007		48349	Urbis	Axia 16 LED 350mA	19 Watts	6.00 Metres	Steel	
Y	29	STREET LIGHTING	FAIRWAY	WALTHAM	526458.59	404492.71	2007		48350	Urbis	Axia 16 LED 350mA	19 Watts	6.00 Metres	Steel	
Y	30	STREET LIGHTING	FAIRWAY	WALTHAM	526488.77	404492.79	2007		48351	Urbis	Axia 16 LED 350mA	19 Watts	6.00 Metres	Steel	
Y	1	STREET LIGHTING	FRANCES COURT	WALTHAM	525238.36	404031.94	1989		48921	Urbis	Axia 16 LED 350mA	19 Watts	5.00 Metres	Galvanised Steel	
Y	2	STREET LIGHTING	FRANCES COURT	WALTHAM	525221.4	404048.2	1989		48922	Urbis	Axia 16 LED 350mA	19 Watts	5.00 Metres	Galvanised Steel	
Y	3	STREET LIGHTING	FRANCES COURT	WALTHAM	525233.93	404062.19	1989		48923	Urbis	Axia 16 LED 350mA	19 Watts	5.00 Metres	Galvanised Steel	
Y	1	STREET LIGHTING	GLENEAGLES	WALTHAM	525098.74	403670.62	1989		49305	Urbis	Axia 16 LED 350mA	19 Watts	5.00 Metres	Galvanised Steel	
Y	2	STREET LIGHTING	GLENEAGLES	WALTHAM	525088.86	403641.06	1989		49306	Urbis	Axia 16 LED 350mA	19 Watts	5.00 Metres	Galvanised Steel	
Y	3	STREET LIGHTING	GLENEAGLES	WALTHAM	525098.87	403602.46	1989		49307	Urbis	Axia 16 LED 350mA	19 Watts	5.00 Metres	Galvanised Steel	
Y	4	STREET LIGHTING	GLENEAGLES	WALTHAM	525125.45	403576.83	1989		49308	Urbis	Axia 16 LED 350mA	19 Watts	5.00 Metres	Galvanised Steel	
Y	5	STREET LIGHTING	GLENEAGLES	WALTHAM	525159.37	403586.38	1989		49309	Urbis	Axia 16 LED 350mA	19 Watts	5.00 Metres	Galvanised Steel	
Y	6	STREET LIGHTING	GLENEAGLES	WALTHAM	525159.12	403618.47	1989		49310	Urbis	Axia 16 LED 350mA	19 Watts	5.00 Metres	Galvanised Steel	
Y	1	STREET LIGHTING	GREENWAY	WALTHAM	526423.65	403409.66	2012	05/07/2012	49749	1 Urbis LED	Teceo 24 LED 500mA	40 Watts	6.00 Metres	Galvanised Steel	
Y	2	STREET LIGHTING	GREENWAY	WALTHAM	526387.58	403440.99	2014	30/06/2014	62806	1 Urbis LED	Teceo 24 LED 500mA	40 Watts	6.00 Metres	Galvanised Steel	
Y	1	STREET LIGHTING	GROVE LANE	WALTHAM	526304.69	403449.84	2009		49946	Urbis	Axia 16 LED 350mA	19 Watts	5.00 Metres	Steel	
Y	2	STREET LIGHTING	GROVE LANE	WALTHAM	526332.22	403472.5	2009		49947	Urbis	Axia 16 LED 350mA	19 Watts	5.00 Metres	Steel	
Y	3	STREET LIGHTING	GROVE LANE	WALTHAM	526342.08	403506.47	2009		49948	Urbis	Axia 16 LED 350mA	19 Watts	5.00 Metres	Steel	
Y	4	STREET LIGHTING	GROVE LANE	WALTHAM	526353.92	403540.84	2009		49949	Urbis	Axia 16 LED 350mA	19 Watts	5.00 Metres	Steel	
Y	5	STREET LIGHTING	GROVE LANE	WALTHAM	526369.43	403570.48	2009		49950	Urbis	Axia 16 LED 350mA	19 Watts	5.00 Metres	Steel	
Y	6	STREET LIGHTING	GROVE LANE	WALTHAM	526394.63	403591.31	2009		49951	Urbis	Axia 16 LED 350mA	19 Watts	5.00 Metres	Steel	
Y	7	STREET LIGHTING	GROVE LANE	WALTHAM	526415.02	403617.75	2009		49952	Urbis	Axia 16 LED 350mA	19 Watts	5.00 Metres	Steel	
Y	8	STREET LIGHTING	GROVE LANE	WALTHAM	526430.76	403644.73	2009		49953	Urbis	Axia 16 LED 350mA	19 Watts	5.00 Metres	Steel	
Y	9	STREET LIGHTING	GROVE LANE	WALTHAM	526452.78	403665.79	2009		49954	Urbis	Axia 16 LED 350mA	19 Watts	5.00 Metres	Steel	
Y	10	STREET LIGHTING	GROVE LANE	WALTHAM	526482.79	403676.89	2008		49955	Urbis	Axia 16 LED 350mA	19 Watts	5.00 Metres	Steel	

Y	11	STREET LIGHTING	GROVE LANE	WALTHAM	526506.27	403687.84	2008		49956	Urbis	Axia 16 LED 350mA	19 Watts	5.00 Metres	Steel	
Y	12	STREET LIGHTING	GROVE LANE	WALTHAM	526533.56	403701.44	2009		49957	Urbis	Axia 16 LED 350mA	19 Watts	5.00 Metres	Steel	
Y	13	STREET LIGHTING	GROVE LANE	WALTHAM	526547.58	403714.69	2009		49958	Urbis	Axia 16 LED 350mA	19 Watts	5.00 Metres	Steel	
Y	1	STREET LIGHTING	HARVEST CRESCENT	WALTHAM	525240.38	404002.13	1986		50291	Urbis	Axia 16 LED 350mA	19 Watts	5.00 Metres	Galvanised Steel	
Y	2	STREET LIGHTING	HARVEST CRESCENT	WALTHAM	525258.36	403981.81	1986		50292	Urbis	Axia 16 LED 350mA	19 Watts	5.00 Metres	Galvanised Steel	
Y	3	STREET LIGHTING	HARVEST CRESCENT	WALTHAM	525282.28	403988.58	1989		50293	Urbis	Axia 16 LED 350mA	19 Watts	5.00 Metres	Galvanised Steel	
Y	1	STREET LIGHTING	HOME PADDOCK	WALTHAM	526439.73	403849.38	1989		50976	Urbis	Axia 16 LED 350mA	19 Watts	5.00 Metres	Galvanised Steel	
Y	2	STREET LIGHTING	HOME PADDOCK	WALTHAM	526419.1	403831.59	1989		50977	Urbis	Axia 16 LED 350mA	19 Watts	5.00 Metres	Galvanised Steel	
Y	3	STREET LIGHTING	HOME PADDOCK	WALTHAM	526394.93	403817.04	1989		50978	Urbis	Axia 16 LED 350mA	19 Watts	5.00 Metres	Galvanised Steel	
Y	4	STREET LIGHTING	HOME PADDOCK	WALTHAM	526362.65	403808.49	1994		50979	Urbis	Axia 16 LED 350mA	19 Watts	5.00 Metres	Galvanised Steel	
Y	5	STREET LIGHTING	HOME PADDOCK	WALTHAM	526339.99	403796.78	1994		50980	Urbis	Axia 16 LED 350mA	19 Watts	5.00 Metres	Galvanised Steel	
Y	6	STREET LIGHTING	HOME PADDOCK	WALTHAM	526318.73	403777.1	1994		50981	Urbis	Axia 16 LED 350mA	19 Watts	5.00 Metres	Galvanised Steel	
Y	7	STREET LIGHTING	HOME PADDOCK	WALTHAM	526302.27	403757.93	1994		50982	Urbis	Axia 16 LED 350mA	19 Watts	5.00 Metres	Galvanised Steel	
Y	8	STREET LIGHTING	HOME PADDOCK	WALTHAM	526285.06	403749.38	1994		50983	Urbis	Axia 16 LED 350mA	19 Watts	5.00 Metres	Galvanised Steel	
Y	1	STREET LIGHTING	INGS LANE	WALTHAM	526344.75	403988.15	2008		51299	Urbis	Axia 16 LED 350mA	19 Watts	6.00 Metres	Steel	
Y	2	STREET LIGHTING	INGS LANE	WALTHAM	526364.46	403965.36	2008		51300	Urbis	Axia 16 LED 350mA	19 Watts	6.00 Metres	Steel	
Y	3	STREET LIGHTING	INGS LANE	WALTHAM	526383.68	403943	2008		51301	Urbis	Axia 16 LED 350mA	19 Watts	6.00 Metres	Steel	
Y	4	STREET LIGHTING	INGS LANE	WALTHAM	526404.16	403919.21	2008		51302	Urbis	Axia 16 LED 350mA	19 Watts	6.00 Metres	Steel	
Y	5	STREET LIGHTING	INGS LANE	WALTHAM	526423.58	403896.64	2008		51303	Urbis	Axia 16 LED 350mA	19 Watts	6.00 Metres	Steel	
Y	6	STREET LIGHTING	INGS LANE	WALTHAM	526443.87	403873.07	2008		51304	Urbis	Axia 16 LED 350mA	19 Watts	6.00 Metres	Steel	
Y	7	STREET LIGHTING	INGS LANE	WALTHAM	526464.68	403848.91	2008		51305	Urbis	Axia 16 LED 350mA	19 Watts	6.00 Metres	Steel	
Y	8	STREET LIGHTING	INGS LANE	WALTHAM	526481	403829	2008		51306	Urbis	Axia 16 LED 350mA	19 Watts	6.00 Metres	Steel	
Y	9	STREET LIGHTING	INGS LANE	WALTHAM	526499.69	403808.61	2008		51307	Urbis	Axia 16 LED 350mA	19 Watts	6.00 Metres	Steel	
Y	10	STREET LIGHTING	INGS LANE	WALTHAM	526520.13	403784.47	2008		51308	Urbis	Axia 16 LED 350mA	19 Watts	6.00 Metres	Steel	
Y	11	STREET LIGHTING	INGS LANE	WALTHAM	526541.81	403759.76	2008		51309	Urbis	Axia 16 LED 350mA	19 Watts	6.00 Metres	Steel	
Y	12	STREET LIGHTING	INGS LANE	WALTHAM	526563.1	403735.17	2008		51310	Urbis	Axia 16 LED 350mA	19 Watts	6.00 Metres	Steel	
Y	13	STREET LIGHTING	INGS LANE	WALTHAM	526583.68	403712.12	2008		51311	Urbis	Axia 16 LED 350mA	19 Watts	6.00 Metres	Steel	
Y	14	STREET LIGHTING	INGS LANE	WALTHAM	526602.51	403691.56	2008		51312	Urbis	Axia 16 LED 350mA	19 Watts	6.00 Metres	Steel	
Y	15	STREET LIGHTING	INGS LANE	WALTHAM	526624.9	403666.88	2008		51313	Urbis	Axia 16 LED 350mA	19 Watts	6.00 Metres	Steel	
Y	16	STREET LIGHTING	INGS LANE	WALTHAM	526643.81	403644.83	2008		51314	Urbis	Axia 16 LED 350mA	19 Watts	6.00 Metres	Steel	
Y	17	STREET LIGHTING	INGS LANE	WALTHAM	526664.45	403619.56	2008		51315	Urbis	Axia 16 LED 350mA	19 Watts	6.00 Metres	Steel	
Y	18	STREET LIGHTING	INGS LANE	WALTHAM	526684.33	403595.88	2008		51316	Urbis	Axia 16 LED 350mA	19 Watts	6.00 Metres	Steel	
Y	19	STREET LIGHTING	INGS LANE	WALTHAM	526703.64	403573.26	2008		51317	Urbis	Axia 16 LED 350mA	19 Watts	6.00 Metres	Steel	
Y	20	STREET LIGHTING	INGS LANE	WALTHAM	526720.75	403553.85	2008		51318	Urbis	Axia 16 LED 350mA	19 Watts	6.00 Metres	Steel	
Y	21	STREET LIGHTING	INGS LANE	WALTHAM	526737.15	403525.72	2008		51319	Urbis	Axia 16 LED 350mA	19 Watts	6.00 Metres	Steel	
Y	22	STREET LIGHTING	INGS LANE	WALTHAM	526758.7	403506.29	2008		51320	Urbis	Axia 16 LED 350mA	19 Watts	6.00 Metres	Steel	
Y	23	STREET LIGHTING	INGS LANE	WALTHAM	526780.07	403484.84	2008		51321	Urbis	Axia 16 LED 350mA	19 Watts	6.00 Metres	Steel	
Y	24	STREET LIGHTING	INGS LANE	WALTHAM	526803.83	403462.53	2008		51322	Urbis	Axia 16 LED 350mA	19 Watts	6.00 Metres	Steel	
Y	25	STREET LIGHTING	INGS LANE	WALTHAM	526825.13	403442.48	2008		51323	Urbis	Axia 16 LED 350mA	19 Watts	6.00 Metres	Steel	
Y	26	STREET LIGHTING	INGS LANE	WALTHAM	526845.58	403423.42	2008		51324	Urbis	Axia 16 LED 350mA	19 Watts	6.00 Metres	Steel	
Y	1	STREET LIGHTING	KIRKGATE	WALTHAM	526086.94	403877.71	2007		51891	1 Urbis LED	Teceo 24 LED 500mA	40 Watts	6.00 Metres	Stainless Steel	
Y	2	STREET LIGHTING	KIRKGATE	WALTHAM	526066.9	403853.56	2007		51892	1 Urbis LED	Teceo 24 LED 500mA	40 Watts	6.00 Metres	Stainless Steel	
Y	3	STREET LIGHTING	KIRKGATE	WALTHAM	526040.03	403835.19	2007		51893	1 Urbis LED	Teceo 24 LED 500mA	40 Watts	6.00 Metres	Stainless Steel	
Y	4	STREET LIGHTING	KIRKGATE	WALTHAM	526039.43	403794.98	2007		51894	1 Urbis LED	Teceo 24 LED 500mA	40 Watts	6.00 Metres	Stainless Steel	
Y	5	STREET LIGHTING	KIRKGATE	WALTHAM	526051.39	403764.89	2003		51895	1 Urbis LED	Teceo 24 LED 500mA	40 Watts	6.00 Metres	Stainless Steel	
Y	6	STREET LIGHTING	KIRKGATE	WALTHAM	526025.75	403742.97	2007		51896	1 Urbis LED	Teceo 24 LED 500mA	40 Watts	6.00 Metres	Stainless Steel	
Y	1	STREET LIGHTING	KIRKSIDE	WALTHAM	526008.23	403786.83	2014	30/06/2014	62807	1 Urbis LED	Axia 16 LED 500mA	28 Watts	6.00 Metres	Galvanised Steel	
Y	1	STREET LIGHTING	LABURNUM AVENUE	WALTHAM	525703.46	403731.65	2014	30/06/2014	62808	1 Urbis LED	Axia 16 LED 500mA	28 Watts	6.00 Metres	Galvanised Steel	
Y	2	STREET LIGHTING	LABURNUM AVENUE	WALTHAM	525706.75	403698.93	2014	30/06/2014	62809	1 Urbis LED	Axia 16 LED 500mA	28 Watts	6.00 Metres	Galvanised Steel	
Y	3	STREET LIGHTING	LABURNUM AVENUE	WALTHAM	525728.53	403659.69	2014	30/06/2014	62810	1 Urbis LED	Axia 16 LED 500mA	28 Watts	6.00 Metres	Galvanised Steel	
Y	4	STREET LIGHTING	LABURNUM AVENUE	WALTHAM	525737.64	403612.8	2014	30/06/2014	62811	1 Urbis LED	Axia 16 LED 500mA	28 Watts	6.00 Metres	Galvanised Steel	
Y	1	STREET LIGHTING	LABURNUM CLOSE	WALTHAM	525760.17	403582.1	2014	30/06/2014	51941	1 Urbis LED	Axia 16 LED 500mA	28 Watts	6.00 Metres	Galvanised Steel	
Y	2	STREET LIGHTING	LABURNUM CLOSE	WALTHAM	525795.61	403591.79	2014	30/06/2014	51942	1 Urbis LED	Axia 16 LED 500mA	28 Watts	6.00 Metres	Galvanised Steel	
Y	3	STREET LIGHTING	LABURNUM CLOSE	WALTHAM	525821.82	403609.57	2014	30/06/2014	62812	1 Urbis LED	Axia 16 LED 500mA	28 Watts	6.00 Metres	Galvanised Steel	
Y	1	STREET LIGHTING	LONGHORN COURT	WALTHAM	524940.55	403918.59	1989		52761	Urbis	Axia 16 LED 350mA	19 Watts	5.00 Metres	Galvanised Steel	
Y	1	STREET LIGHTING	MANOR DRIVE	WALTHAM	526177.69	403958.09	1997		53202	1 Urbis LED	Teceo 24 LED 500mA	40 Watts	6.00 Metres	Galvanised Steel	
Y	2	STREET LIGHTING	MANOR DRIVE	WALTHAM	526176.93	403993.6	1997		53203	1 Urbis LED	Teceo 24 LED 500mA	40 Watts	6.00 Metres	Galvanised Steel	
Y	3	STREET LIGHTING	MANOR DRIVE	WALTHAM	526167.44	404028.09	1997		53204	1 Urbis LED	Teceo 16 LED 500mA	28 Watts	6.00 Metres	Galvanised Steel	
Y	4	STREET LIGHTING	MANOR DRIVE	WALTHAM	526155.92	404033.97	1997		53205	1 Urbis LED	Teceo 16 LED 500mA	28 Watts	6.00 Metres	Galvanised Steel	
Y	5	STREET LIGHTING	MANOR DRIVE	WALTHAM	526142.63	404046.06	1997		53206	1 Urbis LED	Teceo 16 LED 500mA	28 Watts	6.00 Metres	Galvanised Steel	
Y	6	STREET LIGHTING	MANOR DRIVE	WALTHAM	526110.73	404037.65	1997		53207	1 Urbis LED	Teceo 16 LED 500mA	28 Watts	6.00 Metres	Galvanised Steel	
Y	7	STREET LIGHTING	MANOR DRIVE	WALTHAM	526081.62	404044.92	1997		53208	1 Urbis LED	Teceo 16 LED 500mA	28 Watts	6.00 Metres	Galvanised Steel	
Y	8	STREET LIGHTING	MANOR DRIVE	WALTHAM	526072	404066.08	1997		53209	1 Urbis LED	Teceo 16 LED 500mA	28 Watts	6.00 Metres	Galvanised Steel	
Y	9	STREET LIGHTING	MANOR DRIVE	WALTHAM	526069.98	404095.76	1997		53210	1 Urbis LED	Teceo 24 LED 500mA	40 Watts	6.00 Metres	Galvanised Steel	
Y	10	STREET LIGHTING	MANOR DRIVE	WALTHAM	526088.08	404131.08	1997		53211	1 Urbis LED	Teceo 24 LED 500mA	40 Watts	6.00 Metres	Galvanised Steel	
Y	11	STREET LIGHTING	MANOR DRIVE	WALTHAM	526086.81	404161.46	1997		53212	1 Urbis LED	Teceo 24 LED 500mA	40 Watts	6.00 Metres	Galvanised Steel	
Y	12	STREET LIGHTING	MANOR DRIVE	WALTHAM	526103.88	404193.96	1997		53213	1 Urbis LED	Teceo 24 LED 500mA	40 Watts	6.00 Metres	Galvanised Steel	
Y	13	STREET LIGHTING	MANOR DRIVE	WALTHAM	526107.04	404234.47	1997		53214	1 Urbis LED	Teceo 24 LED 500mA	40 Watts	6.00 Metres	Galvanised Steel	
Y	14	STREET LIGHTING	MANOR DRIVE	WALTHAM	526128.05	404257.95	1997		53215	1 Urbis LED	Teceo 24 LED 500mA	40 Watts	6.00 Metres	Galvanised Steel	
Y	15	STREET LIGHTING	MANOR DRIVE	WALTHAM	526140.71	404290.1	1997		53216	1 Urbis LED	Teceo 24 LED 500mA	40 Watts	6.00 Metres	Galvanised Steel	
Y	16	STREET LIGHTING	MANOR DRIVE	WALTHAM	526171.72	404307.51	1997		53217	1 Urbis LED	Teceo 24 LED 500mA	40 Watts	6.00 Metres	Galvanised Steel	
Y	17	STREET LIGHTING	MANOR DRIVE	WALTHAM	526201.22	404323.77	1997		53218	1 Urbis LED	Teceo 24 LED 500mA	40 Watts	6.00 Metres	Galvanised Steel	
Y	1	STREET LIGHTING	MARIAN WAY	WALTHAM	524839.14	403955.99	1987		53288	Urbis	Axia 16 LED 350mA	19 Watts	5.00 Metres	Galvanised Steel	
Y	2	STREET LIGHTING	MARIAN WAY	WALTHAM	524869.89	403958.21	1987		53289	Urbis	Axia 16 LED 350mA	19 Watts	5.00 Metres	Galvanised Steel	
Y	3	STREET LIGHTING	MARIAN WAY	WALTHAM	524900.4	403965.49	1987		53290	Urbis	Axia 16 LED 350mA	19 Watts	5.00 Metres	Galvanised Steel	
Y	4	STREET LIGHTING	MARIAN WAY	WALTHAM	524927.36	403959.09	1987		53291	Urbis	Axia 16 LED 350mA	19 Watts	5.00 Metres	Galvanised Steel	
Y	5	STREET LIGHTING	MARIAN WAY	WALTHAM	524948.88	403940.93	1987		53292	Urbis	Axia 16 LED 350mA	19 Watts	5.00 Metres	Galvanised Steel	
Y	6	STREET LIGHTING	MARIAN WAY	WALTHAM	524969.64	403921.5	1987		53293	Urbis	Axia 16 LED 350mA	19 Watts	5.00 Metres	Galvanised Steel	
Y	7	STREET LIGHTING	MARIAN WAY	WALTHAM	524997.48	403928.14	1987		53294	Urbis	Axia 16 LED 350mA	19 Watts	5.00 Metres	Galvanised Steel	
Y	8	STREET LIGHTING	MARIAN WAY	WALTHAM	525031.15	403929.72	1987		53295	Urbis	Axia 16 LED 350mA	19 Watts	5.00 Metres	Galvanised Steel	
Y	9	STREET LIGHTING	MARIAN WAY	WALTHAM	525058.87	403934.84	1987		53296	Urbis	Axia 16 LED 350mA	19 Watts	5.00 Metres	Galvanised Steel	
Y	10	STREET LIGHTING	MARIAN WAY	WALTHAM	525075.58	403951.57	1987		53297	Urbis	Axia 16 LED 350mA	19 Watts	5.00 Metres	Galvanised Steel	
Y	11	STREET LIGHTING	MARIAN WAY	WALTHAM	525098.74	403951.75	1987		53298	Urbis	Axia 16 LED 350mA	19 Watts	5.00 Metres	Galvanised Steel	
Y	12	STREET LIGHTING	MARIAN WAY	WALTHAM	525118.36	403936.68	1987		53299	Urbis	Axia 16 LED 350mA	19 Watts	5.00 Metres	Galvanised Steel	
Y	13	STREET LIGHTING	MARIAN WAY	WALTHAM	525130.77	403918.26	1987		53300	Urbis	Axia 16 LED 350mA	19 Watts	5.00 Metres	Galvanised Steel	
Y	1	STREET LIGHTING	MAYFAIR CRESCENT	WALTHAM	525439.37	403547.41	2013	11/06/2013	53437	Urbis	Axia 16 LED 350mA	19 Watts	6.00 Metres	Steel	
Y	2	STREET LIGHTING	MAYFAIR CRESCENT	WALTHAM	525467.24	403559.02	2013	11/06/2013	53438	Urbis	Axia 16 LED 350mA	19 Watts	6.00 Metres	Steel	
Y	3	STREET LIGHTING	MAYFAIR CRESCENT	WALTHAM	525494.94	403540.61	2013	11/06/2013	53439	Urbis	Axia 16 LED 350mA	19 Watts	6.00 Metres	Steel	
Y	4	STREET LIGHTING	MAYFAIR CRESCENT	WALTHAM	525511.13	403519.15	2013	11/06/2013	53440	Urbis	Axia 16 LED 350mA	19 Watts	6.00 Metres	Steel	
Y	1	STREET LIGHTING	MOUNT PLEASANT	WALTHAM	525984.47	404126.53	1984		53891	Urbis	Axia 16 LED 350mA	19 Watts	5.00 Metres	Galvanised Steel	
Y	2	STREET LIGHTING	MOUNT PLEASANT	WALTHAM	525944.09	404131.66	2014	30/06/2014	62831	Urbis	Axia 16 LED 350mA	19 Watts	6.00 Metres	Galvanised Steel	
Y	1	STREET LIGHTING	MUIRFIELD	WALTHAM	525081.8	403655.53	1987		53893	Urbis	Axia 16 LED 350mA	19 Watts	5.00 Metres	Galvanised Steel	
Y	2	STREET LIGHTING	MUIRFIELD	WALTHAM	525048.13	403652.97	1987		53894	Urbis	Axia 16 LED 350mA	19 Watts	5.00 Metres	Galvanised Steel	
Y	3	STREET LIGHTING	MUIRFIELD	WALTHAM	525028.26	403629.11	1987		53895	Urbis	Axia 16 LED 350mA	19 Watts	5.00 Metres	Galvanised Steel	
Y	4	STREET LIGHTING	MUIRFIELD	WALTHAM	525018.77	403596.39	1987		53896	Urbis	Axia 16 LED 350mA	19 Watts	5.00 Metres	Galvanised Steel	
Y	5	STREET LIGHTING	MUIRFIELD	WALTHAM	525029.02	403565.26	1987		53897	Urbis	Axia 16 LED 350mA	19 Watts	5.00 Metres	Galvanised Steel	
Y	6	STREET LIGHTING	MUIRFIELD	WALTHAM	525055.1	403537.73	1987		53898	Urbis	Axia 16 LED 350mA	19 Watts	5.00 Metres	Galvanised Steel	
Y	1	STREET LIGHTING	NEVILLE TURNER WAY	WALTHAM	525568.85	403939.42	1989		54009	Urbis	Axia 16 LED 350mA	19 Watts	5.00 Metres	Galvanised Steel	
Y	2	STREET LIGHTING	NEVILLE TURNER WAY	WALTHAM	525583.54	403957.46	1989		54010	Urbis	Axia 16 LED 350mA	19 Watts	5.00 Metres	Galvanised Steel	
Y	3	STREET LIGHTING	NEVILLE TURNER WAY	WALTHAM	525612.27	403966.51	1989		54011	Urbis	Axia 16 LED 350mA	19 Watts	5.00 Metres	Galvanised Steel	
Y	4	STREET LIGHTING	NEVILLE TURNER WAY	WALTHAM	525641.51	403972.52	1989		54012	Urbis	Axia 16 LED 350mA	19 Watts	5.00 Metres	Galvanised Steel	
Y	5	STREET LIGHTING	NEVILLE TURNER WAY	WALTHAM	525672.9	403968.54	1989		54013	Urbis	Axia 16 LED 350mA	19 Watts	5.00 Metres	Galvanised Steel	
Y	6	STREET LIGHTING	NEVILLE TURNER WAY	WALTHAM	525689.23	403987.33	1989		54014	Urbis	Axia 16 LED 350mA	19 Watts	5.00 Metres	Galvanised Steel	
Y	7	STREET LIGHTING	NEVILLE TURNER WAY	WALTHAM	525715.81	403981.64	1990		54015	Urbis	Axia 16 LED 350mA	19 Watts	5.00 Metres	Galvanised Steel	
Y	1	STREET LIGHTING	NEW ROAD	WALTHAM	526109.2	403891.32	1992		54042	1 Urbis LED	Axia 16 LED 500mA	28 Watts	6.00 Metres	Galvanised Steel	
Y	2	STREET LIGHTING	NEW ROAD	WALTHAM	526130.09	403865.62	1992		54043	1 Urbis LED	Axia 16 LED 500mA	28 Watts	6.00 Metres	Galvanised Steel	
Y	3	STREET LIGHTING	NEW ROAD	WALTHAM	526136.16	403848.6	1992		54044	1 Urbis LED	Axia 16 LED 500mA	28 Watts	6.00 Metres	Galvanised Steel	
Y	4	STREET LIGHTING	NEW ROAD	WALTHAM	526137.05	403817.9	1992		54045	1 Urbis LED	Axia 16 LED 500mA	28 Watts	6.00 Metres	Galvanised Steel	
Y	5	STREET LIGHTING	NEW ROAD	WALTHAM	526154.9	403797.46	1992		54046	1 Urbis LED	Axia 16 LED 500mA	28 Watts	6.00 Metres	Galvanised Steel	
Y	6	STREET LIGHTING	NEW ROAD	WALTHAM	526159.96	403771.89	1992		54047	1 Urbis LED	Axia 16 LED 500mA	28 Watts	6.00 Metres	Galvanised Steel	

Y	7	STREET LIGHTING	NEW ROAD	WALTHAM	526179.58	403749.8	1992		54048	1 Urbis LED	Axia 16 LED 500mA	28 Watts	6.00 Metres	Galvanised Steel	
Y	8	STREET LIGHTING	NEW ROAD	WALTHAM	526186.16	403721.89	1992		54049	1 Urbis LED	Axia 16 LED 500mA	28 Watts	6.00 Metres	Galvanised Steel	
Y	9	STREET LIGHTING	NEW ROAD	WALTHAM	526197.42	403701.07	1992		54050	1 Urbis LED	Axia 16 LED 500mA	28 Watts	6.00 Metres	Galvanised Steel	
Y	1	STREET LIGHTING	NORSEFIELD AVENUE	WALTHAM	526199.41	404375.22	2014	30/06/2014	62832	1 Urbis LED	Teceo 24 LED 500mA	40 Watts	6.00 Metres	Galvanised Steel	
Y	2	STREET LIGHTING	NORSEFIELD AVENUE	WALTHAM	526225.99	404339.34	2014	30/06/2014	62833	1 Urbis LED	Teceo 24 LED 500mA	40 Watts	6.00 Metres	Galvanised Steel	
Y	3	STREET LIGHTING	NORSEFIELD AVENUE	WALTHAM	526229.16	404299.46	2014	30/06/2014	62834	Urbis	Axia 16 LED 500mA	28 Watts	6.00 Metres	Galvanised Steel	
Y	1	STREET LIGHTING	ORCHARD COURT	WALTHAM	525720.5	403953.41	1990		54016	Urbis	Axia 16 LED 350mA	19 Watts	5.00 Metres	Galvanised Steel	
Y	2	STREET LIGHTING	ORCHARD COURT	WALTHAM	525727.71	403927.4	1990		54017	Urbis	Axia 16 LED 350mA	19 Watts	5.00 Metres	Galvanised Steel	
Y	1	STREET LIGHTING	PHILIP AVENUE	WALTHAM	526370.3	404228.2	2013		55404	Urbis	Axia 16 LED 350mA	19 Watts	6.00 Metres	Steel	
Y	2	STREET LIGHTING	PHILIP AVENUE	WALTHAM	526339.6	404228.5	2013		55405	Urbis	Axia 16 LED 350mA	19 Watts	6.00 Metres	Steel	
Y	3	STREET LIGHTING	PHILIP AVENUE	WALTHAM	526312.3	404213.9	2013		55406	Urbis	Axia 16 LED 350mA	19 Watts	6.00 Metres	Steel	
Y	4	STREET LIGHTING	PHILIP AVENUE	WALTHAM	526304.2	404193.2	2013		55407	Urbis	Axia 16 LED 350mA	19 Watts	6.00 Metres	Steel	
Y	5	STREET LIGHTING	PHILIP AVENUE	WALTHAM	526306.9	404167.4	2013		55408	Urbis	Axia 16 LED 350mA	19 Watts	6.00 Metres	Steel	
Y	1	STREET LIGHTING	ROSEDALE	WALTHAM	525460	403938	2001		56272	Urbis	Axia 16 LED 350mA	19 Watts	6.00 Metres	Galvanised Steel	
Y	2	STREET LIGHTING	ROSEDALE	WALTHAM	525461.79	403976.64	2021	10/12/2021	68786	Urbis	Axia 24 LED 500mA	28 Watts	6.00 Metres	Galvanised Steel	
Y	3	STREET LIGHTING	ROSEDALE	WALTHAM	525447.91	403991.15	1989		56274	Urbis	Axia 16 LED 350mA	19 Watts	5.00 Metres	Galvanised Steel	
Y	4	STREET LIGHTING	ROSEDALE	WALTHAM	525439.43	404022.48	1989		56275	Urbis	Axia 16 LED 350mA	19 Watts	5.00 Metres	Galvanised Steel	
Y	5	STREET LIGHTING	ROSEDALE	WALTHAM	525438.92	404052.74	1989		56276	Urbis	Axia 16 LED 350mA	19 Watts	5.00 Metres	Galvanised Steel	
Y	6	STREET LIGHTING	ROSEDALE	WALTHAM	525426.65	404084.32	1989		56277	Urbis	Axia 16 LED 350mA	19 Watts	5.00 Metres	Galvanised Steel	
Y	7	STREET LIGHTING	ROSEDALE	WALTHAM	525397.66	404104.19	1989		56278	Urbis	Axia 16 LED 350mA	19 Watts	5.00 Metres	Galvanised Steel	
Y	8	STREET LIGHTING	ROSEDALE	WALTHAM	525373.99	404104.51	1989		56279	Urbis	Axia 16 LED 350mA	19 Watts	5.00 Metres	Galvanised Steel	
Y	9	STREET LIGHTING	ROSEDALE	WALTHAM	525341.97	404092.04	1989		56280	Urbis	Axia 16 LED 350mA	19 Watts	5.00 Metres	Galvanised Steel	
Y	10	STREET LIGHTING	ROSEDALE	WALTHAM	525321.18	404077.93	1989		56281	Urbis	Axia 16 LED 350mA	19 Watts	5.00 Metres	Galvanised Steel	
Y	1	STREET LIGHTING	SALISBURY AVENUE	WALTHAM	525524.13	403639.87	2014	30/06/2014	62835	Urbis	Axia 16 LED 350mA	19 Watts	6.00 Metres	Galvanised Steel	
Y	2	STREET LIGHTING	SALISBURY AVENUE	WALTHAM	525542.35	403590.5	2014	30/06/2014	62836	Urbis	Axia 16 LED 350mA	19 Watts	6.00 Metres	Galvanised Steel	
Y	3	STREET LIGHTING	SALISBURY AVENUE	WALTHAM	525584.53	403599.54	2014	30/06/2014	62837	Urbis	Axia 16 LED 350mA	19 Watts	6.00 Metres	Galvanised Steel	
Y	4	STREET LIGHTING	SALISBURY AVENUE	WALTHAM	525621.41	403619.52	2014		62838	Urbis	Axia 16 LED 350mA	19 Watts	6.00 Metres	Galvanised Steel	
Y	5	STREET LIGHTING	SALISBURY AVENUE	WALTHAM	525629.46	403581.44	2014	30/06/2014	62839	Urbis	Axia 16 LED 350mA	19 Watts	6.00 Metres	Galvanised Steel	
Y	6	STREET LIGHTING	SALISBURY AVENUE	WALTHAM	525646.81	403547.84	2003		56496	Urbis	Axia 16 LED 350mA	19 Watts	6.00 Metres	Galvanised Steel	
Y	1	STREET LIGHTING	SALISBURY DRIVE	WALTHAM	525562.61	403557.27	2014	30/06/2014	62840	Urbis	Axia 16 LED 350mA	19 Watts	6.00 Metres	Galvanised Steel	
Y	2	STREET LIGHTING	SALISBURY DRIVE	WALTHAM	525567.92	403522.15	2014	30/06/2014	62841	Urbis	Axia 16 LED 350mA	19 Watts	6.00 Metres	Galvanised Steel	
Y	3	STREET LIGHTING	SALISBURY DRIVE	WALTHAM	525605.29	403540.94	2014	30/06/2014	62842	Urbis	Axia 16 LED 350mA	19 Watts	6.00 Metres	Galvanised Steel	
Y	1	STREET LIGHTING	SKINNERS LANE	WALTHAM	526114.75	403644.43	2007		57273	Urbis	Axia 16 LED 350mA	19 Watts	6.00 Metres	Steel	
Y	2	STREET LIGHTING	SKINNERS LANE	WALTHAM	526142.09	403665.16	2007		57274	Urbis	Axia 16 LED 350mA	19 Watts	6.00 Metres	Steel	
Y	3	STREET LIGHTING	SKINNERS LANE	WALTHAM	526164.62	403680.54	2007		57276	Urbis	Axia 16 LED 350mA	19 Watts	6.00 Metres	Steel	
Y	4	STREET LIGHTING	SKINNERS LANE	WALTHAM	526192.79	403693.76	2007		57275	Urbis	Axia 16 LED 350mA	19 Watts	6.00 Metres	Steel	
Y	5	STREET LIGHTING	SKINNERS LANE	WALTHAM	526222.92	403705.16	2007		57277	Urbis	Axia 16 LED 350mA	19 Watts	6.00 Metres	Steel	
Y	6	STREET LIGHTING	SKINNERS LANE	WALTHAM	526257.57	403710.3	2007		57278	Urbis	Axia 16 LED 350mA	19 Watts	6.00 Metres	Steel	
Y	7	STREET LIGHTING	SKINNERS LANE	WALTHAM	526282.9	403718.89	2007		57279	Urbis	Axia 16 LED 350mA	19 Watts	6.00 Metres	Steel	
Y	8	STREET LIGHTING	SKINNERS LANE	WALTHAM	526312.02	403726.87	2007		57280	Urbis	Axia 16 LED 350mA	19 Watts	6.00 Metres	Steel	
Y	9	STREET LIGHTING	SKINNERS LANE	WALTHAM	526336.48	403734.14	2007		57281	Urbis	Axia 16 LED 350mA	19 Watts	6.00 Metres	Steel	
Y	10	STREET LIGHTING	SKINNERS LANE	WALTHAM	526366.13	403756.8	2007		57282	Urbis	Axia 16 LED 350mA	19 Watts	6.00 Metres	Steel	
Y	11	STREET LIGHTING	SKINNERS LANE	WALTHAM	526394.96	403759.11	2007		57283	Urbis	Axia 16 LED 350mA	19 Watts	6.00 Metres	Steel	
Y	12	STREET LIGHTING	SKINNERS LANE	WALTHAM	526425.14	403771.07	2007		57284	Urbis	Axia 16 LED 350mA	19 Watts	6.00 Metres	Steel	
Y	13	STREET LIGHTING	SKINNERS LANE	WALTHAM	526451.89	403790.84	2007		57285	Urbis	Axia 16 LED 350mA	19 Watts	6.00 Metres	Steel	
Y	14	STREET LIGHTING	SKINNERS LANE	WALTHAM	526487.55	403796.02	2007		57286	Urbis	Axia 16 LED 350mA	19 Watts	6.00 Metres	Steel	
Y	1	STREET LIGHTING	STERLING CRESCENT	WALTHAM	525167.91	403537.98	2011		58469	Urbis	Axia 16 LED 350mA	19 Watts	6.00 Metres	Steel	
Y	2	STREET LIGHTING	STERLING CRESCENT	WALTHAM	525176.91	403504.24	2011		58470	Urbis	Axia 16 LED 350mA	19 Watts	6.00 Metres	Steel	
Y	3	STREET LIGHTING	STERLING CRESCENT	WALTHAM	525206.49	403482.66	2011		58471	Urbis	Axia 16 LED 350mA	19 Watts	6.00 Metres	Steel	
Y	4	STREET LIGHTING	STERLING CRESCENT	WALTHAM	525217.72	403453.5	2011		58472	Urbis	Axia 16 LED 350mA	19 Watts	6.00 Metres	Steel	
Y	5	STREET LIGHTING	STERLING CRESCENT	WALTHAM	525247.34	403431.99	2011		58473	Urbis	Axia 16 LED 350mA	19 Watts	6.00 Metres	Steel	
Y	6	STREET LIGHTING	STERLING CRESCENT	WALTHAM	525268.91	403404.01	2011		58474	Urbis	Axia 16 LED 350mA	19 Watts	6.00 Metres	Steel	
Y	7	STREET LIGHTING	STERLING CRESCENT	WALTHAM	525297.33	403417.47	2011		58475	Urbis	Axia 16 LED 350mA	19 Watts	6.00 Metres	Steel	
Y	8	STREET LIGHTING	STERLING CRESCENT	WALTHAM	525324.02	403427.81	2011		58476	Urbis	Axia 16 LED 350mA	19 Watts	6.00 Metres	Steel	
Y	9	STREET LIGHTING	STERLING CRESCENT	WALTHAM	525360.61	403432.36	2011		58477	Urbis	Axia 16 LED 350mA	19 Watts	6.00 Metres	Steel	
Y	10	STREET LIGHTING	STERLING CRESCENT	WALTHAM	525382.01	403450.66	2011		58478	Urbis	Axia 16 LED 350mA	19 Watts	6.00 Metres	Steel	
Y	1	STREET LIGHTING	STRAWBERRY HILL	WALTHAM	524968.14	403685.69	2008		58533	1 Urbis LED	Axia 16 LED 500mA	28 Watts	6.00 Metres	Stainless Steel	
Y	2	STREET LIGHTING	STRAWBERRY HILL	WALTHAM	524976.45	403658.5	2008		58534	1 Urbis LED	Axia 16 LED 500mA	28 Watts	6.00 Metres	Galvanised Steel	
Y	3	STREET LIGHTING	STRAWBERRY HILL	WALTHAM	525010.29	403641.39	1986		58535	1 Urbis LED	Axia 16 LED 500mA	28 Watts	5.00 Metres	Galvanised Steel	
Y	1	STREET LIGHTING	SUMMERFIELD AVENUE	WALTHAM	526311.94	404445.66	2013		58567	Urbis	Axia 16 LED 350mA	19 Watts	6.00 Metres	Steel	
Y	2	STREET LIGHTING	SUMMERFIELD AVENUE	WALTHAM	526310.98	404420.5	2013		58568	Urbis	Axia 16 LED 350mA	19 Watts	6.00 Metres	Steel	
Y	3	STREET LIGHTING	SUMMERFIELD AVENUE	WALTHAM	526309.84	404386.2	2013		58569	Urbis	Axia 16 LED 350mA	19 Watts	6.00 Metres	Steel	
Y	4	STREET LIGHTING	SUMMERFIELD AVENUE	WALTHAM	526315.94	404347.41	2013		58570	Urbis	Axia 16 LED 350mA	19 Watts	6.00 Metres	Steel	
Y	5	STREET LIGHTING	SUMMERFIELD AVENUE	WALTHAM	526297.17	404324.73	2013		58571	Urbis	Axia 16 LED 350mA	19 Watts	6.00 Metres	Steel	
Y	6	STREET LIGHTING	SUMMERFIELD AVENUE	WALTHAM	526282.2	404295.29	2013		58572	Urbis	Axia 16 LED 350mA	19 Watts	6.00 Metres	Steel	
Y	7	STREET LIGHTING	SUMMERFIELD AVENUE	WALTHAM	526265.15	404279.75	2013		58573	Urbis	Axia 16 LED 350mA	19 Watts	6.00 Metres	Steel	
Y	8	STREET LIGHTING	SUMMERFIELD AVENUE	WALTHAM	526264.86	404256.41	2013		58574	Urbis	Axia 16 LED 350mA	19 Watts	6.00 Metres	Steel	
Y	9	STREET LIGHTING	SUMMERFIELD AVENUE	WALTHAM	526241.04	404259.65	2013		58575	Urbis	Axia 16 LED 350mA	19 Watts	6.00 Metres	Steel	
Y	1	STREET LIGHTING	SUMMERFIELD CLOSE	WALTHAM	526307.93	404300.53	2013		58576	Urbis	Axia 16 LED 350mA	19 Watts	6.00 Metres	Steel	
Y	2	STREET LIGHTING	SUMMERFIELD CLOSE	WALTHAM	526323.47	404286.52	2013		58577	Urbis	Axia 16 LED 350mA	19 Watts	6.00 Metres	Steel	
Y	1	STREET LIGHTING	TURNBERRY APPROACH	WALTHAM	525368.77	403747.54	1987		59487	Urbis	Axia 16 LED 350mA	19 Watts	5.00 Metres	Galvanised Steel	
Y	2	STREET LIGHTING	TURNBERRY APPROACH	WALTHAM	525389.4	403768.99	1987		59488	Urbis	Axia 16 LED 350mA	19 Watts	5.00 Metres	Galvanised Steel	
Y	3	STREET LIGHTING	TURNBERRY APPROACH	WALTHAM	525421.42	403782.85	1987		59489	Urbis	Axia 16 LED 350mA	19 Watts	5.00 Metres	Galvanised Steel	
Y	4	STREET LIGHTING	TURNBERRY APPROACH	WALTHAM	525450.66	403786.64	1987		59490	Urbis	Axia 16 LED 350mA	19 Watts	5.00 Metres	Galvanised Steel	
Y	5	STREET LIGHTING	TURNBERRY APPROACH	WALTHAM	525481.55	403787.72	1987		59491	Urbis	Axia 16 LED 350mA	19 Watts	5.00 Metres	Galvanised Steel	
Y	6	STREET LIGHTING	TURNBERRY APPROACH	WALTHAM	525515.72	403788.92	1987		59492	Urbis	Axia 16 LED 350mA	19 Watts	5.00 Metres	Galvanised Steel	
Y	7	STREET LIGHTING	TURNBERRY APPROACH	WALTHAM	525550.28	403782.78	1987		59493	Urbis	Axia 16 LED 350mA	19 Watts	5.00 Metres	Galvanised Steel	
Y	8	STREET LIGHTING	TURNBERRY APPROACH	WALTHAM	525578.63	403784.81	1987		59494	Urbis	Axia 16 LED 350mA	19 Watts	5.00 Metres	Galvanised Steel	
Y	1	STREET LIGHTING	WESTFIELD ROAD	WALTHAM	525355.28	403606.46	2011		60395	Urbis	Axia 16 LED 350mA	19 Watts	6.00 Metres	Steel	
Y	2	STREET LIGHTING	WESTFIELD ROAD	WALTHAM	525374.25	403585.58	2011		60396	Urbis	Axia 16 LED 350mA	19 Watts	6.00 Metres	Steel	
Y	3	STREET LIGHTING	WESTFIELD ROAD	WALTHAM	525395.14	403561.52	2011		60397	Urbis	Axia 16 LED 350mA	19 Watts	6.00 Metres	Steel	
Y	4	STREET LIGHTING	WESTFIELD ROAD	WALTHAM	525417.34	403523.44	2011		60398	Urbis	Axia 16 LED 350mA	19 Watts	6.00 Metres	Steel	
Y	5	STREET LIGHTING	WESTFIELD ROAD	WALTHAM	525448.2	403503.35	2011		60399	Urbis	Axia 16 LED 350mA	19 Watts	6.00 Metres	Steel	
Y	6	STREET LIGHTING	WESTFIELD ROAD	WALTHAM	525472.09	403468.29	2011		60400	Urbis	Axia 16 LED 350mA	19 Watts	6.00 Metres	Steel	
Y	7	STREET LIGHTING	WESTFIELD ROAD	WALTHAM	525505.6	403449.27	2011		60401	Urbis	Axia 16 LED 350mA	19 Watts	6.00 Metres	Steel	
Y	8	STREET LIGHTING	WESTFIELD ROAD	WALTHAM	525543.29	403436.4	2011		60402	Urbis	Axia 16 LED 350mA	19 Watts	6.00 Metres	Steel	
Y	9	STREET LIGHTING	WESTFIELD ROAD	WALTHAM	525570.87	403408.49	2011		60403	Urbis	Axia 16 LED 350mA	19 Watts	6.00 Metres	Steel	
Y	10	STREET LIGHTING	WESTFIELD ROAD	WALTHAM	525598.93	403391.29	2011		60404	Urbis	Axia 16 LED 350mA	19 Watts	6.00 Metres	Steel	
Y	11	STREET LIGHTING	WESTFIELD ROAD	WALTHAM	525631.4	403377.22	2011		60405	Urbis	Axia 16 LED 350mA	19 Watts	6.00 Metres	Steel	
Y	12	STREET LIGHTING	WESTFIELD ROAD	WALTHAM	525668.38	403381.65	2011		60406	Urbis	Axia 16 LED 350mA	19 Watts	6.00 Metres	Steel	
Y	13	STREET LIGHTING	WESTFIELD ROAD	WALTHAM	525697.8	403393.14	2011		60407	Urbis	Axia 16 LED 350mA	19 Watts	6.00 Metres	Steel	
Y	14	STREET LIGHTING	WESTFIELD ROAD	WALTHAM	525726.18	403398.77	2011		60408	Urbis	Axia 16 LED 350mA	19 Watts	6.00 Metres	Steel	
Y	15	STREET LIGHTING	WESTFIELD ROAD	WALTHAM	525762.75	403405.52	2011		60409	Urbis	Axia 16 LED 350mA	19 Watts	6.00 Metres	Steel	
Y	16	STREET LIGHTING	WESTFIELD ROAD	WALTHAM	525789.84	403385.83	2011		60410	Urbis	Axia 16 LED 350mA	19 Watts	6.00 Metres	Steel	
Y	1	STREET LIGHTING	WHEATFIELD DRIVE	WALTHAM	525113.17	403954.34	1988		60628	Urbis	Axia 16 LED 350mA	19 Watts	5.00 Metres	Galvanised Steel	
Y	2	STREET LIGHTING	WHEATFIELD DRIVE	WALTHAM	525133.3	403976.05	1988		60629	Urbis	Axia 16 LED 350mA	19 Watts	5.00 Metres	Galvanised Steel	
Y	3	STREET LIGHTING	WHEATFIELD DRIVE	WALTHAM	525155.58	403982.19	1988		60630	Urbis	Axia 16 LED 350mA	19 Watts	5.00 Metres	Galvanised Steel	
Y	4	STREET LIGHTING	WHEATFIELD DRIVE	WALTHAM	525178.99	403969.09	1989		60631	Urbis	Axia 16 LED 350mA	19 Watts	5.00 Metres	Galvanised Steel	
Y	5	STREET LIGHTING	WHEATFIELD DRIVE	WALTHAM	525205.95	403976.62	1989		60632	Urbis	Axia 16 LED 350mA	19 Watts	5.00 Metres	Galvanised Steel	
Y	6	STREET LIGHTING	WHEATFIELD DRIVE	WALTHAM	525225.07	403990.73	1989		60633	Urbis	Axia 16 LED 350mA	19 Watts	5.00 Metres	Galvanised Steel	
Y	7	STREET LIGHTING	WHEATFIELD DRIVE	WALTHAM	525245.95	404013.33	1989		60634	Urbis	Axia 16 LED 350mA	19 Watts	5.00 Metres	Galvanised Steel	
Y	8	STREET LIGHTING	WHEATFIELD DRIVE	WALTHAM	525265.45	404038.83	1989		60635	Urbis	Axia 16 LED 350mA	19 Watts	5.00 Metres	Galvanised Steel	
Y	1	STREET LIGHTING	WRAY CLOSE	WALTHAM	525115.58	403974.6	1987		61257	Urbis	Axia 16 LED 350mA	19 Watts	5.00 Metres	Galvanised Steel	
Y	2	STREET LIGHTING	WRAY CLOSE	WALTHAM	525102.29	403983.02	1987		61258	Urbis	Axia 16 LED 350mA	19 Watts	5.00 Metres	Galvanised Steel	
Y	3	STREET LIGHTING	WRAY CLOSE	WALTHAM	525091.91	404001.06	1987		61259	Urbis	Axia 16 LED 350mA	19 Watts	5.00 Metres	Galvanised Steel	
Y	1	STREET LIGHTING	ATKINSON LANE	WALTHAM	526042.21	403553.27	2014	30/06/2014	62793	1 Urbis LED	Teceo 24 LED 500mA	40 Watts	6.00 Metres	Galvanised Steel	
Y	2	STREET LIGHTING	ATKINSON LANE	WALTHAM	526072.58	403544.22	2014	30/06/2014	62794	1 Urbis LED	Teceo 24 LED 500mA	40 Watts	6.00 Metres	Galvanised Steel	
Y	1	STREET LIGHTING	BARKWORTH COURT	WALTHAM	525196.72	403964.98	1988		43694	Urbis	Axia 16 LED 350mA	19 Watts	5.00 Metres	Galvanised Steel	
Y	2	STREET LIGHTING	BARKWORTH COURT	WALTHAM	525192.92	403940.48	1988		43695	Urbis	Axia 16 LED 350mA	19 Watts	5.00 Metres	Galvanised Steel	
Y	1	STREET LIGHTING	BIRKDALE	WALTHAM	525236.22	403600.66	2005		44166	Urbis	Axia 16 LED 350mA	19 Watts	6.00 Metres	Stainless Steel	

Y	2	STREET LIGHTING	BIRKDALE	WALTHAM	525245.34	403623.95	1984		44167	Urbis	Axia 16 LED 350mA	19 Watts	5.00 Metres	Galvanised Steel	
Y	3	STREET LIGHTING	BIRKDALE	WALTHAM	525274.83	403629.01	1984		44168	Urbis	Axia 16 LED 350mA	19 Watts	5.00 Metres	Galvanised Steel	
Y	4	STREET LIGHTING	BIRKDALE	WALTHAM	525312.77	403626.16	2016	08/06/2016	68521	Urbis	Axia 8 LED 350mA	10 Watts	6.00 Metres	Steel	
Y	5	STREET LIGHTING	BIRKDALE	WALTHAM	525223.44	403636.1	1984		44170	Urbis	Axia 16 LED 350mA	19 Watts	5.00 Metres	Galvanised Steel	
Y	6	STREET LIGHTING	BIRKDALE	WALTHAM	525228.48	403663.42	2022	04/01/2022	68795	Urbis	Axia 16 LED 350mA	19 Watts	6.00 Metres	Galvanised Steel	
Y	7	STREET LIGHTING	BIRKDALE	WALTHAM	525212.24	403695.79	2008		44172	Urbis	Axia 16 LED 350mA	19 Watts	6.00 Metres	Steel	
Y	1	STREET LIGHTING	CARDINAL COURT	WALTHAM	525305.23	404070.4	1989		45238	Urbis	Axia 16 LED 350mA	19 Watts	5.00 Metres	Galvanised Steel	
Y	2	STREET LIGHTING	CARDINAL COURT	WALTHAM	525286.37	404097.3	1989		45239	Urbis	Axia 16 LED 350mA	19 Watts	5.00 Metres	Galvanised Steel	
Y	1	STREET LIGHTING	CHADWELL SPRINGS	WALTHAM	524997.63	403729.34	1986		45553	Urbis	Axia 16 LED 350mA	19 Watts	5.00 Metres	Galvanised Steel	
Y	2	STREET LIGHTING	CHADWELL SPRINGS	WALTHAM	524994.46	403760.67	1986		45554	Urbis	Axia 16 LED 350mA	19 Watts	5.00 Metres	Galvanised Steel	
Y	3	STREET LIGHTING	CHADWELL SPRINGS	WALTHAM	524961.93	403776.62	1986		45555	Urbis	Axia 16 LED 350mA	19 Watts	5.00 Metres	Galvanised Steel	
Y	4	STREET LIGHTING	CHADWELL SPRINGS	WALTHAM	524936.37	403791.11	1986		45556	Urbis	Axia 16 LED 350mA	19 Watts	5.00 Metres	Galvanised Steel	
Y	5	STREET LIGHTING	CHADWELL SPRINGS	WALTHAM	524915.23	403817.5	1986		45557	Urbis	Axia 16 LED 350mA	19 Watts	5.00 Metres	Galvanised Steel	
Y	6	STREET LIGHTING	CHADWELL SPRINGS	WALTHAM	524918.77	403847.64	1986		45558	Urbis	Axia 16 LED 350mA	19 Watts	5.00 Metres	Galvanised Steel	
Y	7	STREET LIGHTING	CHADWELL SPRINGS	WALTHAM	524954.09	403852.13	1986		45559	Urbis	Axia 16 LED 350mA	19 Watts	5.00 Metres	Galvanised Steel	
Y	8	STREET LIGHTING	CHADWELL SPRINGS	WALTHAM	524978.04	403862.2	1986		45560	Urbis	Axia 16 LED 350mA	19 Watts	5.00 Metres	Galvanised Steel	
Y	9	STREET LIGHTING	CHADWELL SPRINGS	WALTHAM	524903.2	403847	1986		45561	Urbis	Axia 16 LED 350mA	19 Watts	5.00 Metres	Galvanised Steel	
Y	10	STREET LIGHTING	CHADWELL SPRINGS	WALTHAM	524893.84	403872.12	1986		45562	Urbis	Axia 16 LED 350mA	19 Watts	5.00 Metres	Galvanised Steel	
Y	11	STREET LIGHTING	CHADWELL SPRINGS	WALTHAM	524890.29	403899.59	1986		45563	Urbis	Axia 16 LED 350mA	19 Watts	5.00 Metres	Galvanised Steel	
Y	1	STREET LIGHTING	CHESTNUT CLOSE	WALTHAM	525310.79	403519.48	2011		45849	Urbis	Axia 16 LED 350mA	19 Watts	6.00 Metres	Steel	
Y	2	STREET LIGHTING	CHESTNUT CLOSE	WALTHAM	525292.13	403503.67	2011		45850	Urbis	Axia 16 LED 350mA	19 Watts	6.00 Metres	Steel	
Y	3	STREET LIGHTING	CHESTNUT CLOSE	WALTHAM	525278.04	403504.61	2011		45851	Urbis	Axia 16 LED 350mA	19 Watts	6.00 Metres	Steel	
Y	1	STREET LIGHTING	CHILTERN DRIVE	WALTHAM	525574.08	403427.2	2002		45914	Urbis	Axia 16 LED 350mA	19 Watts	6.00 Metres	Steel	
Y	2	STREET LIGHTING	CHILTERN DRIVE	WALTHAM	525590.5	403450.92	2002		45915	Urbis	Axia 16 LED 350mA	19 Watts	6.00 Metres	Steel	
Y	3	STREET LIGHTING	CHILTERN DRIVE	WALTHAM	525620.48	403469.88	2013	18/06/2013	68518	Urbis	Axia 16 LED 350mA	19 Watts	6.00 Metres	Steel	
Y	4	STREET LIGHTING	CHILTERN DRIVE	WALTHAM	525650.69	403482.4	2013	18/06/2013	68519	Urbis	Axia 16 LED 350mA	19 Watts	6.00 Metres	Steel	
Y	5	STREET LIGHTING	CHILTERN DRIVE	WALTHAM	525672.9	403489.4	2013	18/06/2013	45918	Urbis	Axia 16 LED 350mA	19 Watts	6.00 Metres	Steel	
Y	6	STREET LIGHTING	CHILTERN DRIVE	WALTHAM	525694.5	403491.47	2013	18/06/2013	68520	Urbis	Axia 16 LED 350mA	19 Watts	6.00 Metres	Steel	
Y	1	STREET LIGHTING	COTSWOLD DRIVE	WALTHAM	525721.51	403418.13	2005		46785	Urbis	Axia 16 LED 350mA	19 Watts	5.00 Metres	Stainless Steel	
Y	2	STREET LIGHTING	COTSWOLD DRIVE	WALTHAM	525728.6	403449.59	2014	30/06/2014	62801	Urbis	Axia 16 LED 350mA	19 Watts	6.00 Metres	Galvanised Steel	
Y	3	STREET LIGHTING	COTSWOLD DRIVE	WALTHAM	525747.82	403477.24	2010	27/05/2010	46787	Urbis	Axia 16 LED 350mA	19 Watts	6.00 Metres	Galvanised Steel	
Y	4	STREET LIGHTING	COTSWOLD DRIVE	WALTHAM	525749.55	403500.38	2003		46788	Urbis	Axia 16 LED 350mA	19 Watts	5.00 Metres	Stainless Steel	
Y	5	STREET LIGHTING	COTSWOLD DRIVE	WALTHAM	525773.4	403511.21	2003		46789	Urbis	Axia 16 LED 350mA	19 Watts	5.00 Metres	Stainless Steel	
Y	1	STREET LIGHTING	COLTSFOOT DRIVE	WALTHAM	524910.04	403980.42	1987		46425	Urbis	Axia 16 LED 350mA	19 Watts	5.00 Metres	Galvanised Steel	
Y	2	STREET LIGHTING	COLTSFOOT DRIVE	WALTHAM	524911.94	404005.54	1987		46426	Urbis	Axia 16 LED 350mA	19 Watts	5.00 Metres	Galvanised Steel	
Y	3	STREET LIGHTING	COLTSFOOT DRIVE	WALTHAM	524937.89	404004.59	1987		46427	Urbis	Axia 16 LED 350mA	19 Watts	5.00 Metres	Galvanised Steel	
Y	4	STREET LIGHTING	COLTSFOOT DRIVE	WALTHAM	524964.6	403990.99	1987		46428	Urbis	Axia 16 LED 350mA	19 Watts	5.00 Metres	Galvanised Steel	
Y	1	STREET LIGHTING	CORAL DRIVE	WALTHAM	525339.92	404104.2	1989		46691	Urbis	Axia 16 LED 350mA	19 Watts	5.00 Metres	Galvanised Steel	
Y	2	STREET LIGHTING	CORAL DRIVE	WALTHAM	525330.43	404129.96	1989		46692	Urbis	Axia 16 LED 350mA	19 Watts	5.00 Metres	Galvanised Steel	
Y	3	STREET LIGHTING	CORAL DRIVE	WALTHAM	525342.45	404156.48	1989		46693	Urbis	Axia 16 LED 350mA	19 Watts	5.00 Metres	Galvanised Steel	
Y	1	STREET LIGHTING	DOUGHTY CLOSE	WALTHAM	526215.69	404242.4	2013		47511	Urbis	Axia 16 LED 350mA	19 Watts	6.00 Metres	Steel	
Y	2	STREET LIGHTING	DOUGHTY CLOSE	WALTHAM	526181.96	404220.58	2013		47512	Urbis	Axia 16 LED 350mA	19 Watts	6.00 Metres	Steel	
Y	3	STREET LIGHTING	DOUGHTY CLOSE	WALTHAM	526164.23	404232.49	2013		47513	Urbis	Axia 16 LED 350mA	19 Watts	6.00 Metres	Steel	
Y	4	STREET LIGHTING	DOUGHTY CLOSE	WALTHAM	526185.29	404246.31	2013		47514	Urbis	Axia 16 LED 350mA	19 Watts	6.00 Metres	Steel	
Y	1	STREET LIGHTING	FOUNTAIN CLOSE	WALTHAM	525417.14	404035.62	1990		48895	Urbis	Axia 16 LED 350mA	19 Watts	5.00 Metres	Galvanised Steel	
Y	2	STREET LIGHTING	FOUNTAIN CLOSE	WALTHAM	525393.47	404019.73	1990		48896	Urbis	Axia 16 LED 350mA	19 Watts	5.00 Metres	Galvanised Steel	
Y	1	STREET LIGHTING	GRIMSBY ROAD	WALTHAM	526467.15	404100.02	1978		61635	1 Urbis LED	Teceo 48 LED 700mA	104 Watts	10.00 Metres	Galvanised Steel	
Y	1	STREET LIGHTING	GRIMSBY ROAD	WALTHAM	526467.15	404100.02	1978		62167	1 Urbis LED	Teceo 48 LED 700mA	104 Watts	10.00 Metres	Galvanised Steel	
Y	2	STREET LIGHTING	GRIMSBY ROAD	WALTHAM	526474.34	404112.62	1978		49898	1 Urbis LED	Teceo 48 LED 700mA	104 Watts	10.00 Metres	Galvanised Steel	
Y	3	STREET LIGHTING	GRIMSBY ROAD	WALTHAM	526466.37	404130.02	1988		49899	1 Urbis LED	Teceo 48 LED 700mA	104 Watts	10.00 Metres	Galvanised Steel	
Y	4	STREET LIGHTING	GRIMSBY ROAD	WALTHAM	526484.21	404162.74	1988		49900	1 Urbis LED	Teceo 48 LED 700mA	104 Watts	10.00 Metres	Galvanised Steel	
Y	5	STREET LIGHTING	GRIMSBY ROAD	WALTHAM	526480.04	404199.4	1988		49901	1 Urbis LED	Teceo 48 LED 700mA	104 Watts	10.00 Metres	Galvanised Steel	
Y	6	STREET LIGHTING	GRIMSBY ROAD	WALTHAM	526497.81	404229.26	1988		49902	1 Urbis LED	Teceo 48 LED 700mA	104 Watts	10.00 Metres	Galvanised Steel	
Y	7	STREET LIGHTING	GRIMSBY ROAD	WALTHAM	526505.12	404262.75	1988		49903	1 Urbis LED	Teceo 48 LED 700mA	104 Watts	10.00 Metres	Galvanised Steel	
Y	8	STREET LIGHTING	GRIMSBY ROAD	WALTHAM	526509.17	404297.73	1988		49904	1 Urbis LED	Teceo 48 LED 700mA	104 Watts	10.00 Metres	Galvanised Steel	
Y	9	STREET LIGHTING	GRIMSBY ROAD	WALTHAM	526499.04	404333.08	1988		49905	1 Urbis LED	Teceo 48 LED 700mA	104 Watts	10.00 Metres	Galvanised Steel	
Y	10	STREET LIGHTING	GRIMSBY ROAD	WALTHAM	526512.85	404365.13	1988		49906	1 Urbis LED	Teceo 48 LED 700mA	104 Watts	10.00 Metres	Galvanised Steel	
Y	11	STREET LIGHTING	GRIMSBY ROAD	WALTHAM	526501.8	404396.9	1988		49907	1 Urbis LED	Teceo 48 LED 700mA	104 Watts	10.00 Metres	Galvanised Steel	
Y	12	STREET LIGHTING	GRIMSBY ROAD	WALTHAM	526514.21	404434.97	2020	08/12/2020	68208	Urbis	Teceo 48 LED 700mA	104 Watts	12.00 Metres	Galvanised Steel	
Y	13	STREET LIGHTING	GRIMSBY ROAD	WALTHAM	526504.56	404466.44	1988		49909	1 Urbis LED	Teceo 48 LED 700mA	104 Watts	10.00 Metres	Galvanised Steel	
Y	14	STREET LIGHTING	GRIMSBY ROAD	WALTHAM	526516.51	404499.57	1988		49910	1 Urbis LED	Teceo 48 LED 700mA	104 Watts	10.00 Metres	Galvanised Steel	
Y	15	STREET LIGHTING	GRIMSBY ROAD	WALTHAM	526507.14	404535.52	1988		49911	1 Urbis LED	Teceo 48 LED 700mA	104 Watts	10.00 Metres	Galvanised Steel	
Y	16	STREET LIGHTING	GRIMSBY ROAD	WALTHAM	526519.55	404574.82	2012		49912	1 Urbis LED	Teceo 48 LED 700mA	104 Watts	10.00 Metres	Steel	
Y	17	STREET LIGHTING	GRIMSBY ROAD	WALTHAM	526510.06	404607.73	1988		49913	1 Urbis LED	Teceo 48 LED 700mA	104 Watts	10.00 Metres	Galvanised Steel	
Y	18	STREET LIGHTING	GRIMSBY ROAD	WALTHAM	526521.95	404643.47	2003		49914	1 Urbis LED	Teceo 48 LED 700mA	104 Watts	10.00 Metres	Stainless Steel	
Y	19	STREET LIGHTING	GRIMSBY ROAD	WALTHAM	526512.08	404675.36	1988		49915	1 Urbis LED	Teceo 48 LED 700mA	104 Watts	10.00 Metres	Galvanised Steel	
Y	20	STREET LIGHTING	GRIMSBY ROAD	WALTHAM	526525.75	404710.24	1988		49916	1 Urbis LED	Teceo 48 LED 700mA	104 Watts	10.00 Metres	Galvanised Steel	
Y	21	STREET LIGHTING	GRIMSBY ROAD	WALTHAM	526518.79	404744.38	1988		49917	1 Urbis LED	Teceo 48 LED 700mA	104 Watts	8.00 Metres	Galvanised Steel	
Y	22	STREET LIGHTING	GRIMSBY ROAD	WALTHAM	526536.65	404777.6	1988		49918	1 Urbis LED	Teceo 48 LED 700mA	104 Watts	10.00 Metres	Galvanised Steel	
Y	23	STREET LIGHTING	GRIMSBY ROAD	WALTHAM	526532	404814.05	1988		49919	1 Urbis LED	Teceo 48 LED 700mA	104 Watts	10.00 Metres	Galvanised Steel	
Y	1	STREET LIGHTING	HIGH STREET	WALTHAM	525873.33	403808.91	1988		50692	1 Urbis LED	Teceo 48 LED 500mA	79 Watts	10.00 Metres	Galvanised Steel	
Y	2	STREET LIGHTING	HIGH STREET	WALTHAM	525890.79	403836.57	1988		50693	1 Urbis LED	Teceo 48 LED 500mA	79 Watts	10.00 Metres	Galvanised Steel	
Y	3	STREET LIGHTING	HIGH STREET	WALTHAM	525910.54	403857.14	1988		50694	1 Urbis LED	Teceo 48 LED 500mA	79 Watts	10.00 Metres	Galvanised Steel	
Y	4	STREET LIGHTING	HIGH STREET	WALTHAM	525943.07	403869.23	2016	12/09/2016	50695	1 Urbis LED	Teceo 48 LED 500mA	79 Watts	10.00 Metres	Galvanised Steel	
Y	5	STREET LIGHTING	HIGH STREET	WALTHAM	525965.98	403899.6	1988		50696	1 Urbis LED	Teceo 48 LED 500mA	79 Watts	10.00 Metres	Galvanised Steel	
Y	6	STREET LIGHTING	HIGH STREET	WALTHAM	526000.79	403923.84	2010		50697	1 Urbis LED	Teceo 48 LED 500mA	79 Watts	10.00 Metres	Galvanised Steel	
Y	7	STREET LIGHTING	HIGH STREET	WALTHAM	526014.98	403911.29	1988		50698	1 Urbis LED	Teceo 48 LED 500mA	79 Watts	10.00 Metres	Galvanised Steel	
Y	8	STREET LIGHTING	HIGH STREET	WALTHAM	526026.5	403926.99	1988		50699	1 Urbis LED	Teceo 48 LED 500mA	79 Watts	10.00 Metres	Galvanised Steel	
Y	9	STREET LIGHTING	HIGH STREET	WALTHAM	526046.75	403920.98	1988		50700	1 Urbis LED	Teceo 48 LED 500mA	79 Watts	10.00 Metres	Galvanised Steel	
Y	10	STREET LIGHTING	HIGH STREET	WALTHAM	526077.38	403898.38	1988		50701	1 Urbis LED	Teceo 48 LED 500mA	79 Watts	10.00 Metres	Galvanised Steel	
Y	11	STREET LIGHTING	HIGH STREET	WALTHAM	526105.74	403902.25	1988		50702	1 Urbis LED	Teceo 48 LED 500mA	79 Watts	10.00 Metres	Galvanised Steel	
Y	12	STREET LIGHTING	HIGH STREET	WALTHAM	526133.97	403918.77	1988		50703	1 Urbis LED	Teceo 48 LED 500mA	79 Watts	10.00 Metres	Galvanised Steel	
Y	13	STREET LIGHTING	HIGH STREET	WALTHAM	526162.07	403944.34	2011	31/03/2011	50704	1 Urbis LED	Teceo 48 LED 500mA	79 Watts	10.00 Metres	Galvanised Steel	
Y	14	STREET LIGHTING	HIGH STREET	WALTHAM	526196.3	403951.44	1988		50705	1 Urbis LED	Teceo 48 LED 500mA	79 Watts	10.00 Metres	Galvanised Steel	
Y	15	STREET LIGHTING	HIGH STREET	WALTHAM	526231.36	403945.05	2008		50706	1 Urbis LED	Teceo 48 LED 500mA	79 Watts	10.00 Metres	Steel	
Y	16	STREET LIGHTING	HIGH STREET	WALTHAM	526264.9	403958.59	1988		50707	1 Urbis LED	Teceo 48 LED 700mA	104 Watts	10.00 Metres	Galvanised Steel	
Y	17	STREET LIGHTING	HIGH STREET	WALTHAM	526299.33	403975.93	1988		50708	1 Urbis LED	Teceo 48 LED 700mA	104 Watts	10.00 Metres	Galvanised Steel	
Y	18	STREET LIGHTING	HIGH STREET	WALTHAM	526325.03	404001.76	1988		50709	1 Urbis LED	Teceo 48 LED 500mA	79 Watts	10.00 Metres	Galvanised Steel	
Y	19	STREET LIGHTING	HIGH STREET	WALTHAM	526355.68	404017.55	1988		50710	1 Urbis LED	Teceo 48 LED 700mA	104 Watts	10.00 Metres	Galvanised Steel	
Y	20	STREET LIGHTING	HIGH STREET	WALTHAM	526391.5	404023.55	1988		50711	1 Urbis LED	Teceo 48 LED 700mA	104 Watts	10.00 Metres	Galvanised Steel	
Y	21	STREET LIGHTING	HIGH STREET	WALTHAM	526420.3	404051.39	2018	07/08/2018	50712	1 Urbis LED	Teceo 48 LED 700mA	104 Watts	10.00 Metres	Galvanised Steel	
Y	22	STREET LIGHTING	HIGH STREET	WALTHAM	526452.2	404061.33	1988		61659	1 Urbis LED	Teceo 48 LED 700mA	104 Watts	10.00 Metres	Galvanised Steel	
Y	22	STREET LIGHTING	HIGH STREET	WALTHAM	526452.2	404061.33	1988		62191	1 Urbis LED	Teceo 48 LED 700mA	104 Watts	10.00 Metres	Galvanised Steel	
Y	1	STREET LIGHTING	LEAS CLOSE	WALTHAM	526135.14	404168.2	2014		62813	1 Urbis LED	Axia 16 LED 500mA	28 Watts	6.00 Metres	Galvanised Steel	
Y	1	STREET LIGHTING	LINDRICK WALK	WALTHAM	525249.79	403884.24	1989		52565	Urbis	Axia 16 LED 350mA	19 Watts	5.00 Metres	Galvanised Steel	
Y	2	STREET LIGHTING	LINDRICK WALK	WALTHAM	525251.57	403852.53	1989		52566	Urbis	Axia 16 LED 350mA	19 Watts	5.00 Metres	Galvanised Steel	
Y	3	STREET LIGHTING	LINDRICK WALK	WALTHAM	525258.02	403830.06	1989		52567	Urbis	Axia 16 LED 350mA	19 Watts	5.00 Metres	Galvanised Steel	
Y	4	STREET LIGHTING	LINDRICK WALK	WALTHAM	525281.82	403838.61	1989		52568	Urbis	Axia 16 LED 350mA	19 Watts	5.00 Metres	Galvanised Steel	
Y	5	STREET LIGHTING	LINDRICK WALK	WALTHAM	525284.75	403795.76	1989		52569	Urbis	Axia 8 LED 350mA	10 Watts	5.00 Metres	Galvanised Steel	
Y	1	STREET LIGHTING	LYTHAM DRIVE	WALTHAM	525507.39	403353.96	2011		53026	1 Urbis LED	Axia 16 LED 500mA	28 Watts	6.00 Metres	Steel	
Y	2	STREET LIGHTING	LYTHAM DRIVE	WALTHAM	525540.48	403337.03	2011		53027	1 Urbis LED	Axia 16 LED 500mA	28 Watts	6.00 Metres	Steel	
Y	3	STREET LIGHTING	LYTHAM DRIVE	WALTHAM	525564.62	403315.97	2011		53028	1 Urbis LED	Axia 16 LED 500mA	28 Watts	6.00 Metres	Steel	
Y	4	STREET LIGHTING	LYTHAM DRIVE	WALTHAM	525592.93	403297.55	2011		53029	1 Urbis LED	Axia 16 LED 500mA	28 Watts	6.00 Metres	Steel	
Y	5	STREET LIGHTING	LYTHAM DRIVE	WALTHAM	525624.12	403294.97	2011		53030	Urbis	Axia 16 LED 350mA	19 Watts	6.00 Metres	Steel	
Y	6	STREET LIGHTING	LYTHAM DRIVE	WALTHAM	525608.16	403269.64	2011		53031	1 Urbis LED	Axia 16 LED 500mA	28 Watts	6.00 Metres	Steel	
Y	1	STREET LIGHTING	MILL CLOSE	WALTHAM	526080.43	403409.79	2014	30/06/2014	62818	1 Urbis LED	Teceo 24 LED 500mA	40 Watts	6.00 Metres	Galvanised Steel	
Y	2	STREET LIGHTING	MILL CLOSE	WALTHAM	526052.33	403371.69	2014	30/06/2014	62819	1 Urbis LED	Teceo 24 LED 500mA	40 Watts	6.00 Metres	Galvanised Steel	
Y	3	STREET LIGHTING	MILL CLOSE	WALTHAM	526015.25	403397.71	2014	30/06/2014	62820	1 Urbis LED	Teceo 24 LED 500mA	40 Watts	6.00 Metres	Galvanised Steel	
Y	1	STREET LIGHTING	MILL VIEW	WALTHAM	526152.94	403520.05	2014	30/06/2014	62821	1 Urbis LED	Axia 16 LED 500mA	28 Watts	6.00 Metres	Galvanised Steel	
Y	2	STREET LIGHTING	MILL VIEW	WALTHAM	526133.98	403498.72	2014	30/06/2014	62822	1 Urbis LED	Axia 16 LED 500mA	28 Watts	6.00 Metres	Galvanised Steel	

Y	3	STREET LIGHTING	MILL VIEW	WALTHAM	526170.81	403494.1	2014	30/06/2014	62823	1 Urbis LED	Axia 16 LED 500mA	28 Watts	6.00 Metres	Galvanised Steel	
Y	4	STREET LIGHTING	MILL VIEW	WALTHAM	523139.55	403473.15	2014	30/06/2014	62824	1 Urbis LED	Axia 16 LED 500mA	28 Watts	6.00 Metres	Galvanised Steel	
Y	5	STREET LIGHTING	MILL VIEW	WALTHAM	526130.05	403440.81	2014	30/06/2014	62825	1 Urbis LED	Axia 16 LED 500mA	28 Watts	6.00 Metres	Galvanised Steel	
Y	6	STREET LIGHTING	MILL VIEW	WALTHAM	526119.93	403451.07	2014	30/06/2014	62826	1 Urbis LED	Axia 16 LED 500mA	28 Watts	6.00 Metres	Galvanised Steel	
Y	7	STREET LIGHTING	MILL VIEW	WALTHAM	526097.27	403428.09	2014	30/06/2014	62827	1 Urbis LED	Axia 16 LED 500mA	28 Watts	6.00 Metres	Galvanised Steel	
Y	8	STREET LIGHTING	MILL VIEW	WALTHAM	526047.4	403451.82	2014	30/06/2014	62828	1 Urbis LED	Axia 16 LED 500mA	28 Watts	6.00 Metres	Galvanised Steel	
Y	9	STREET LIGHTING	MILL VIEW	WALTHAM	526027.78	403484.66	2007		53662	1 Urbis LED	Axia 16 LED 500mA	28 Watts	6.00 Metres	Galvanised Steel	
Y	10	STREET LIGHTING	MILL VIEW	WALTHAM	526004.48	403525.8	2014	30/06/2014	62829	1 Urbis LED	Axia 16 LED 500mA	28 Watts	6.00 Metres	Galvanised Steel	
Y	11	STREET LIGHTING	MILL VIEW	WALTHAM	525988.65	403556.35	2002		53664	1 Urbis LED	Axia 16 LED 500mA	28 Watts	6.00 Metres	Stainless Steel	
Y	12	STREET LIGHTING	MILL VIEW	WALTHAM	525985.88	403586.68	2013		53665	1 Urbis LED	Axia 16 LED 500mA	28 Watts	6.00 Metres	Galvanised Steel	
Y	13	STREET LIGHTING	MILL VIEW	WALTHAM	526007.53	403610.65	2014	30/06/2014	62830	1 Urbis LED	Axia 16 LED 500mA	28 Watts	6.00 Metres	Galvanised Steel	
Y	14	STREET LIGHTING	MILL VIEW	WALTHAM	526040.68	403638.77	2014	30/06/2014	53667	1 Urbis LED	Axia 16 LED 500mA	28 Watts	6.00 Metres	Galvanised Steel	
Y	15	STREET LIGHTING	MILL VIEW	WALTHAM	526061.54	403664.19	1987		53668	1 Urbis LED	Axia 16 LED 500mA	28 Watts	5.00 Metres	Galvanised Steel	
Y	1	STREET LIGHTING	OLD FARM COURT	WALTHAM	525043.18	403923.2	1989		54378	Urbis	Axia 16 LED 350mA	19 Watts	5.00 Metres	Galvanised Steel	
Y	2	STREET LIGHTING	OLD FARM COURT	WALTHAM	525043.56	403893.77	1989		54379	Urbis	Axia 16 LED 350mA	19 Watts	5.00 Metres	Galvanised Steel	
Y	1	STREET LIGHTING	PEACE HAVEN	WALTHAM	525416.07	404110.48	1989		54814	Urbis	Axia 16 LED 350mA	19 Watts	5.00 Metres	Galvanised Steel	
Y	2	STREET LIGHTING	PEACE HAVEN	WALTHAM	525440.93	404124.35	1990		54815	Urbis	Axia 16 LED 350mA	19 Watts	5.00 Metres	Galvanised Steel	
Y	3	STREET LIGHTING	PEACE HAVEN	WALTHAM	525458.53	404136.94	1989		54816	Urbis	Axia 16 LED 350mA	19 Watts	5.00 Metres	Galvanised Steel	
Y	4	STREET LIGHTING	PEACE HAVEN	WALTHAM	525444.73	404144.41	1989		54817	Urbis	Axia 16 LED 350mA	19 Watts	5.00 Metres	Galvanised Steel	
Y	5	STREET LIGHTING	PEACE HAVEN	WALTHAM	525424.86	404163.71	1990		54818	Urbis	Axia 16 LED 350mA	19 Watts	5.00 Metres	Galvanised Steel	
Y	6	STREET LIGHTING	PEACE HAVEN	WALTHAM	525393.98	404160.23	1990		54819	Urbis	Axia 16 LED 350mA	19 Watts	5.00 Metres	Galvanised Steel	
Y	1	STREET LIGHTING	SUNNINGDALE	WALTHAM	525413.22	403671.83	1986		58578	1 Urbis LED	Axia 16 LED 500mA	28 Watts	5.00 Metres	Galvanised Steel	
Y	2	STREET LIGHTING	SUNNINGDALE	WALTHAM	525362.72	403662.59	1986		58579	1 Urbis LED	Axia 16 LED 500mA	28 Watts	5.00 Metres	Galvanised Steel	
Y	3	STREET LIGHTING	SUNNINGDALE	WALTHAM	525393.35	403683.03	1986		58580	1 Urbis LED	Axia 16 LED 500mA	28 Watts	5.00 Metres	Galvanised Steel	
Y	4	STREET LIGHTING	SUNNINGDALE	WALTHAM	525403.1	403707.97	1986		58581	1 Urbis LED	Axia 16 LED 500mA	28 Watts	5.00 Metres	Galvanised Steel	
Y	5	STREET LIGHTING	SUNNINGDALE	WALTHAM	525378.79	403730.57	1986		58582	1 Urbis LED	Axia 16 LED 500mA	28 Watts	5.00 Metres	Galvanised Steel	
Y	6	STREET LIGHTING	SUNNINGDALE	WALTHAM	525349.05	403751.14	1986		58583	1 Urbis LED	Axia 16 LED 500mA	28 Watts	5.00 Metres	Galvanised Steel	
Y	7	STREET LIGHTING	SUNNINGDALE	WALTHAM	525320.95	403769.17	1986		58584	1 Urbis LED	Axia 16 LED 500mA	28 Watts	5.00 Metres	Galvanised Steel	
Y	8	STREET LIGHTING	SUNNINGDALE	WALTHAM	525288.29	403772.15	1986		58585	1 Urbis LED	Axia 16 LED 500mA	28 Watts	5.00 Metres	Galvanised Steel	
Y	9	STREET LIGHTING	SUNNINGDALE	WALTHAM	525261.29	403758.89	1986		58586	1 Urbis LED	Axia 16 LED 500mA	28 Watts	5.00 Metres	Galvanised Steel	
Y	10	STREET LIGHTING	SUNNINGDALE	WALTHAM	525235.09	403738.57	1986		58587	1 Urbis LED	Axia 16 LED 500mA	28 Watts	5.00 Metres	Galvanised Steel	
Y	11	STREET LIGHTING	SUNNINGDALE	WALTHAM	525210.79	403719.06	2012		58588	1 Urbis LED	Axia 16 LED 500mA	28 Watts	6.00 Metres	Steel	
Y	12	STREET LIGHTING	SUNNINGDALE	WALTHAM	525187.49	403696.55	1986		58589	1 Urbis LED	Axia 16 LED 500mA	28 Watts	5.00 Metres	Galvanised Steel	
Y	13	STREET LIGHTING	SUNNINGDALE	WALTHAM	525156.61	403685.47	1986		58590	1 Urbis LED	Axia 16 LED 500mA	28 Watts	5.00 Metres	Galvanised Steel	
Y	14	STREET LIGHTING	SUNNINGDALE	WALTHAM	525124.58	403680.6	1986		58591	1 Urbis LED	Axia 16 LED 500mA	28 Watts	5.00 Metres	Galvanised Steel	
Y	15	STREET LIGHTING	SUNNINGDALE	WALTHAM	525092.57	403694.66	1986		58592	1 Urbis LED	Axia 16 LED 500mA	28 Watts	5.00 Metres	Galvanised Steel	
Y	16	STREET LIGHTING	SUNNINGDALE	WALTHAM	525074.22	403728.9	1986		58593	1 Urbis LED	Axia 16 LED 500mA	28 Watts	5.00 Metres	Galvanised Steel	
Y	1	STREET LIGHTING	STATION ROAD	WALTHAM	526486.37	404077.6	1983		61908	1 Urbis LED	Teceo 48 LED 500mA	79 Watts	10.00 Metres	Galvanised Steel	
Y	1	STREET LIGHTING	STATION ROAD	WALTHAM	526486.37	404077.6	1983		62442	1 Urbis LED	Teceo 48 LED 500mA	79 Watts	10.00 Metres	Galvanised Steel	
Y	2	STREET LIGHTING	STATION ROAD	WALTHAM	526520.04	404078.04	1983		58356	1 Urbis LED	Teceo 48 LED 500mA	79 Watts	10.00 Metres	Galvanised Steel	
Y	3	STREET LIGHTING	STATION ROAD	WALTHAM	526539.03	404096.59	2006		58357	1 Urbis LED	Teceo 48 LED 500mA	79 Watts	10.00 Metres	Stainless Steel	
Y	4	STREET LIGHTING	STATION ROAD	WALTHAM	526578.59	404099.29	2021	28/04/2021	68444	Urbis	Teceo 48 LED 500mA	79 Watts	12.00 Metres	Galvanised Steel	
Y	5	STREET LIGHTING	STATION ROAD	WALTHAM	526614.61	404121.7	1983		58359	1 Urbis LED	Teceo 48 LED 500mA	79 Watts	10.00 Metres	Galvanised Steel	
Y	6	STREET LIGHTING	STATION ROAD	WALTHAM	526654.6	404123.87	1983		58360	1 Urbis LED	Teceo 48 LED 500mA	79 Watts	10.00 Metres	Galvanised Steel	
Y	7	STREET LIGHTING	STATION ROAD	WALTHAM	526691.26	404147.42	1983		58361	1 Urbis LED	Teceo 48 LED 500mA	79 Watts	10.00 Metres	Galvanised Steel	
Y	8	STREET LIGHTING	STATION ROAD	WALTHAM	526734.54	404152.05	1983		58362	1 Urbis LED	Teceo 48 LED 700mA	104 Watts	10.00 Metres	Galvanised Steel	
Y	9	STREET LIGHTING	STATION ROAD	WALTHAM	526770.69	404174.41	1983		58363	1 Urbis LED	Teceo 48 LED 500mA	79 Watts	10.00 Metres	Galvanised Steel	
Y	10	STREET LIGHTING	STATION ROAD	WALTHAM	526812.77	404178.68	1983		58364	1 Urbis LED	Teceo 48 LED 500mA	79 Watts	10.00 Metres	Galvanised Steel	
Y	11	STREET LIGHTING	STATION ROAD	WALTHAM	526849.53	404201.04	1983		58365	1 Urbis LED	Teceo 48 LED 500mA	79 Watts	10.00 Metres	Galvanised Steel	
Y	12	STREET LIGHTING	STATION ROAD	WALTHAM	526892.54	404205.93	1983		58366	1 Urbis LED	Teceo 48 LED 500mA	79 Watts	10.00 Metres	Galvanised Steel	
Y	13	STREET LIGHTING	STATION ROAD	WALTHAM	526928.68	404228.44	1983		58367	1 Urbis LED	Teceo 48 LED 500mA	79 Watts	10.00 Metres	Galvanised Steel	
Y	14	STREET LIGHTING	STATION ROAD	WALTHAM	526971.35	404232.56	1983		58368	1 Urbis LED	Teceo 48 LED 700mA	104 Watts	10.00 Metres	Galvanised Steel	
Y	15	STREET LIGHTING	STATION ROAD	WALTHAM	527008.41	404255.08	1983		58369	1 Urbis LED	Teceo 48 LED 500mA	79 Watts	10.00 Metres	Galvanised Steel	
Y	16	STREET LIGHTING	STATION ROAD	WALTHAM	527051.28	404259.42	1983		58370	1 Urbis LED	Teceo 48 LED 500mA	79 Watts	10.00 Metres	Galvanised Steel	
Y	17	STREET LIGHTING	STATION ROAD	WALTHAM	527087.57	404282.04	1983		58371	1 Urbis LED	Teceo 48 LED 500mA	79 Watts	10.00 Metres	Galvanised Steel	
Y	18	STREET LIGHTING	STATION ROAD	WALTHAM	527130.53	404286.58	1983		58372	1 Urbis LED	Teceo 48 LED 500mA	79 Watts	10.00 Metres	Galvanised Steel	
Y	19	STREET LIGHTING	STATION ROAD	WALTHAM	527166.15	404308.69	1983		58373	1 Urbis LED	Teceo 48 LED 500mA	79 Watts	10.00 Metres	Galvanised Steel	
Y	20	STREET LIGHTING	STATION ROAD	WALTHAM	527210.46	404313.23	2014		58374	1 Urbis LED	Teceo 48 LED 500mA	79 Watts	10.00 Metres	Galvanised Steel	
Y	21	STREET LIGHTING	STATION ROAD	WALTHAM	527250.01	404337.34	2021	28/04/2021	68611	Urbis	Teceo 48 LED 500mA	79 Watts	12.00 Metres	Galvanised Steel	
Y	22	STREET LIGHTING	STATION ROAD	WALTHAM	527288.2	404339.54	1983		58376	1 Urbis LED	Teceo 48 LED 700mA	104 Watts	10.00 Metres	Galvanised Steel	
Y	1	STREET LIGHTING	SWEETBRIAR CLOSE	WALTHAM	525324.73	404049.58	1990		58689	Urbis	Axia 16 LED 350mA	19 Watts	5.00 Metres	Galvanised Steel	
Y	2	STREET LIGHTING	SWEETBRIAR CLOSE	WALTHAM	525323.59	404020.85	1990		58690	Urbis	Axia 16 LED 350mA	19 Watts	5.00 Metres	Galvanised Steel	
Y	3	STREET LIGHTING	SWEETBRIAR CLOSE	WALTHAM	525332.83	403998.82	1990		58691	Urbis	Axia 16 LED 350mA	19 Watts	5.00 Metres	Galvanised Steel	
Y	1	STREET LIGHTING	WOODHALL DRIVE	WALTHAM	524912.32	403672.97	1985		61102	1 Urbis LED	Axia 16 LED 500mA	28 Watts	5.00 Metres	Galvanised Steel	
Y	2	STREET LIGHTING	WOODHALL DRIVE	WALTHAM	524940.3	403690.86	1985		61103	1 Urbis LED	Axia 16 LED 500mA	28 Watts	5.00 Metres	Galvanised Steel	
Y	3	STREET LIGHTING	WOODHALL DRIVE	WALTHAM	524967.51	403708.14	1985		61104	1 Urbis LED	Axia 16 LED 500mA	28 Watts	5.00 Metres	Galvanised Steel	
Y	4	STREET LIGHTING	WOODHALL DRIVE	WALTHAM	525000.04	403707.82	1985		61105	1 Urbis LED	Axia 16 LED 500mA	28 Watts	5.00 Metres	Galvanised Steel	
Y	5	STREET LIGHTING	WOODHALL DRIVE	WALTHAM	525029.54	403717.82	1985		61106	1 Urbis LED	Axia 16 LED 500mA	28 Watts	5.00 Metres	Galvanised Steel	
Y	6	STREET LIGHTING	WOODHALL DRIVE	WALTHAM	525056.25	403740.73	1985		61107	1 Urbis LED	Axia 16 LED 500mA	28 Watts	5.00 Metres	Galvanised Steel	
Y	7	STREET LIGHTING	WOODHALL DRIVE	WALTHAM	525082.12	403767.18	2022	04/01/2022	68794	Urbis	Axia 24 LED 500mA	28 Watts	6.00 Metres	Galvanised Steel	
Y	8	STREET LIGHTING	WOODHALL DRIVE	WALTHAM	525107.39	403786.56	1985		61109	1 Urbis LED	Axia 16 LED 500mA	28 Watts	5.00 Metres	Galvanised Steel	
Y	9	STREET LIGHTING	WOODHALL DRIVE	WALTHAM	525128.51	403814.71	1985		61110	1 Urbis LED	Axia 16 LED 500mA	28 Watts	5.00 Metres	Galvanised Steel	
Y	10	STREET LIGHTING	WOODHALL DRIVE	WALTHAM	525149.02	403843.54	2022	04/01/2022	68797	Urbis	Axia 24 LED 500mA	28 Watts	6.00 Metres	Galvanised Steel	
Y	11	STREET LIGHTING	WOODHALL DRIVE	WALTHAM	525170.91	403864.7	1985		61112	1 Urbis LED	Axia 16 LED 500mA	28 Watts	5.00 Metres	Galvanised Steel	
Y	12	STREET LIGHTING	WOODHALL DRIVE	WALTHAM	525199.14	403884.76	1985		61113	1 Urbis LED	Axia 16 LED 500mA	28 Watts	5.00 Metres	Galvanised Steel	
Y	13	STREET LIGHTING	WOODHALL DRIVE	WALTHAM	525232.51	403898.52	1985		61114	1 Urbis LED	Axia 16 LED 500mA	28 Watts	5.00 Metres	Galvanised Steel	
Y	14	STREET LIGHTING	WOODHALL DRIVE	WALTHAM	525268.45	403907.57	2011	01/10/2011	61115	1 Urbis LED	Axia 16 LED 500mA	28 Watts	6.00 Metres	Galvanised Steel	
Y	15	STREET LIGHTING	WOODHALL DRIVE	WALTHAM	525299.59	403921.9	1985		61116	1 Urbis LED	Axia 16 LED 500mA	28 Watts	5.00 Metres	Galvanised Steel	
Y	16	STREET LIGHTING	WOODHALL DRIVE	WALTHAM	525329.09	403935.26	1985		61117	1 Urbis LED	Axia 16 LED 500mA	28 Watts	5.00 Metres	Galvanised Steel	
Y	17	STREET LIGHTING	WOODHALL DRIVE	WALTHAM	525359.72	403947.47	1985		61118	1 Urbis LED	Axia 16 LED 500mA	28 Watts	5.00 Metres	Galvanised Steel	
Y	18	STREET LIGHTING	WOODHALL DRIVE	WALTHAM	525382.63	403956.4	1985		61119	1 Urbis LED	Axia 16 LED 500mA	28 Watts	5.00 Metres	Galvanised Steel	
Y	19	STREET LIGHTING	WOODHALL DRIVE	WALTHAM	525411.49	403967.73	1985		61120	1 Urbis LED	Axia 16 LED 500mA	28 Watts	5.00 Metres	Galvanised Steel	
Y	20	STREET LIGHTING	WOODHALL DRIVE	WALTHAM	525442.76	403968.8	1985		61121	1 Urbis LED	Axia 16 LED 500mA	28 Watts	5.00 Metres	Galvanised Steel	
Y	1	STREET LIGHTING	BRIGSLEY ROAD	WALTHAM	525889.27	403794.04	1988		44713	1 Urbis LED	Teceo 48 LED 700mA	104 Watts	10.00 Metres	Galvanised Steel	
Y	2	STREET LIGHTING	BRIGSLEY ROAD	WALTHAM	525871.17	403778.03	1988		44714	1 Urbis LED	Teceo 48 LED 700mA	104 Watts	10.00 Metres	Galvanised Steel	
Y	3	STREET LIGHTING	BRIGSLEY ROAD	WALTHAM	525874.97	403754.55	1988		44715	1 Urbis LED	Teceo 48 LED 700mA	104 Watts	10.00 Metres	Galvanised Steel	
Y	4	STREET LIGHTING	BRIGSLEY ROAD	WALTHAM	525878.26	403720.06	1988		44716	1 Urbis LED	Teceo 48 LED 700mA	104 Watts	10.00 Metres	Galvanised Steel	
Y	5	STREET LIGHTING	BRIGSLEY ROAD	WALTHAM	525881.43	403692.21	2022	29/07/2022	68975	Urbis	Teceo 48 LED 700mA	104 Watts	12.00 Metres	Galvanised Steel	
Y	6	STREET LIGHTING	BRIGSLEY ROAD	WALTHAM	525899.28	403656.58	2022	29/07/2022	69138	Urbis	Teceo 48 LED 700mA	104 Watts	12.00 Metres	Galvanised Steel	
Y	7	STREET LIGHTING	BRIGSLEY ROAD	WALTHAM	525908.64	403620.44	1989		44719	1 Urbis LED	Teceo 48 LED 700mA	104 Watts	10.00 Metres	Galvanised Steel	
Y	8	STREET LIGHTING	BRIGSLEY ROAD	WALTHAM	525913.2	403581.2	1989		44720	1 Urbis LED	Teceo 48 LED 700mA	104 Watts	10.00 Metres	Galvanised Steel	
Y	9	STREET LIGHTING	BRIGSLEY ROAD	WALTHAM	525910.67	403545.7	1989		44721	1 Urbis LED	Teceo 48 LED 700mA	104 Watts	10.00 Metres	Galvanised Steel	
Y	10	STREET LIGHTING	BRIGSLEY ROAD	WALTHAM	525898.83	403504.39	1989		44722	1 Urbis LED	Teceo 48 LED 700mA	104 Watts	10.00 Metres	Galvanised Steel	
Y	11	STREET LIGHTING	BRIGSLEY ROAD	WALTHAM	525880.4	403465.4	1989		44723	1 Urbis LED	Teceo 48 LED 700mA	104 Watts	10.00 Metres	Galvanised Steel	
Y	12	STREET LIGHTING	BRIGSLEY ROAD	WALTHAM	525855.49	403430.47	1989		44724	1 Urbis LED	Teceo 48 LED 700mA	104 Watts	10.00 Metres	Galvanised Steel	
Y	13	STREET LIGHTING	BRIGSLEY ROAD	WALTHAM	525819.44	403403.63	1989		44725	1 Urbis LED	Teceo 48 LED 700mA	104 Watts	10.00 Metres	Galvanised Steel	
Y	14	STREET LIGHTING	BRIGSLEY ROAD	WALTHAM	525814.17	403374.57	1989		44726	1 Urbis LED	Teceo 48 LED 700mA	104 Watts	10.00 Metres	Galvanised Steel	
Y	15	STREET LIGHTING	BRIGSLEY ROAD	WALTHAM	525780.15	403349.15	1989		44727	1 Urbis LED	Teceo 48 LED 700mA	104 Watts	10.00 Metres	Galvanised Steel	
Y	16	STREET LIGHTING	BRIGSLEY ROAD	WALTHAM	525760.32	403321.27	1989		44728	1 Urbis LED	Teceo 48 LED 700mA	104 Watts	10.00 Metres	Galvanised Steel	
Y	17	STREET LIGHTING	BRIGSLEY ROAD	WALTHAM	525738.68	403289.94	1989		44729	1 Urbis LED	Teceo 48 LED 700mA	104 Watts	10.00 Metres	Galvanised Steel	
Y	18	STREET LIGHTING	BRIGSLEY ROAD	WALTHAM	525720.2	403259.57	1989		44730	1 Urbis LED	Teceo 48 LED 700mA	104 Watts	10.00 Metres	Galvanised Steel	
Y	19	STREET LIGHTING	BRIGSLEY ROAD	WALTHAM	525703.87	403226.53	1989		44731	1 Urbis LED	Teceo 48 LED 700mA	104 Watts	10.00 Metres	Galvanised Steel	
Y	20	STREET LIGHTING	BRIGSLEY ROAD	WALTHAM	525691.34	403194.82	1989		44732	1 Urbis LED	Teceo 48 LED 700mA	104 Watts	10.00 Metres	Galvanised Steel	
Y	21	STREET LIGHTING	BRIGSLEY ROAD	WALTHAM	525691.7	403161.44	1989		44733	1 Urbis LED	Teceo 48 LED 700mA	104 Watts	10.00 Metres	Galvanised Steel	
Y	22	STREET LIGHTING	BRIGSLEY ROAD	WALTHAM	525678.43	403128.15	1989		44734	1 Urbis LED	Teceo 48 LED 700mA	104 Watts	10.00 Metres	Galvanised Steel	
Y	23	STREET LIGHTING	BRIGSLEY ROAD	WALTHAM	525662.36	403093.49	1989		44735	1 Urbis LED	Teceo 48 LED 700mA	104 Watts	10.00 Metres	Galvanised Steel	
Y	24	STREET LIGHTING	BRIGSLEY ROAD	WALTHAM	525646.15	403058.93	1989		44736	1 Urbis LED	Teceo 48 LED 700mA	104 Watts	10.00 Metres	Galvanised Steel	
Y	25	STREET LIGHTING	BRIGSLEY ROAD	WALTHAM	525628.81	403021.65	1989		44737	1 Urbis LED	Teceo 48 LED 700mA	104 Watts	10.00 Metres	Galvanised Steel	
Y	1	STREET LIGHTING	BRADLEY ROAD	WALTHAM	524982.9	403509.42	1984		44516	1 Urbis LED	Teceo 48 LED 500mA	79 Watts	8.00 Metres	Galvanised Steel	
Y	2	STREET LIGHTING	BRADLEY ROAD	WALTHAM	524968.4	403536.37	1984		44517	1 Urbis LED	Teceo 48 LED 500mA	79 Watts	8.00 Metres	Galvanised Steel	

Y	3	STREET LIGHTING	BRADLEY ROAD	WALTHAM	524950.17	403565.63	1989		44518	1 Urbis LED	Teceo 48 LED 500mA	79 Watts	8.00 Metres	Galvanised Steel	
Y	4	STREET LIGHTING	BRADLEY ROAD	WALTHAM	524936.6	403587.61	1989		44519	1 Urbis LED	Teceo 48 LED 500mA	79 Watts	8.00 Metres	Galvanised Steel	
Y	5	STREET LIGHTING	BRADLEY ROAD	WALTHAM	524921	403613.22	1989		44520	1 Urbis LED	Teceo 48 LED 500mA	79 Watts	8.00 Metres	Galvanised Steel	
Y	6	STREET LIGHTING	BRADLEY ROAD	WALTHAM	524907.43	403634.59	1989		44521	1 Urbis LED	Teceo 48 LED 500mA	79 Watts	8.00 Metres	Galvanised Steel	
Y	7	STREET LIGHTING	BRADLEY ROAD	WALTHAM	524887.88	403666.66	1989		44522	1 Urbis LED	Teceo 48 LED 500mA	79 Watts	8.00 Metres	Galvanised Steel	
Y	8	STREET LIGHTING	BRADLEY ROAD	WALTHAM	524873.07	403691.66	1989		44523	1 Urbis LED	Teceo 48 LED 500mA	79 Watts	8.00 Metres	Galvanised Steel	
Y	9	STREET LIGHTING	BRADLEY ROAD	WALTHAM	524857.75	403715.65	1989		44524	1 Urbis LED	Teceo 48 LED 500mA	79 Watts	8.00 Metres	Galvanised Steel	
Y	10	STREET LIGHTING	BRADLEY ROAD	WALTHAM	524844.84	403740.66	1989		44525	1 Urbis LED	Teceo 48 LED 500mA	79 Watts	8.00 Metres	Galvanised Steel	
Y	11	STREET LIGHTING	BRADLEY ROAD	WALTHAM	524834.84	403769.84	1989		44526	1 Urbis LED	Teceo 48 LED 500mA	79 Watts	8.00 Metres	Galvanised Steel	
Y	12	STREET LIGHTING	BRADLEY ROAD	WALTHAM	524839.53	403795.4	1984		44527	1 Urbis LED	Teceo 40 LED 500mA	64 Watts	6.00 Metres	Galvanised Steel	
Y	13	STREET LIGHTING	BRADLEY ROAD	WALTHAM	524834.21	403831.22	2005		44528	1 Urbis LED	Teceo 48 LED 500mA	79 Watts	8.00 Metres	Stainless Steel	
Y	14	STREET LIGHTING	BRADLEY ROAD	WALTHAM	524832.18	403867.63	1984		44529	1 Urbis LED	Teceo 40 LED 500mA	64 Watts	6.00 Metres	Galvanised Steel	
Y	15	STREET LIGHTING	BRADLEY ROAD	WALTHAM	524832.69	403901.68	1984		44530	1 Urbis LED	Teceo 40 LED 500mA	64 Watts	6.00 Metres	Galvanised Steel	
Y	16	STREET LIGHTING	BRADLEY ROAD	WALTHAM	524831.3	403937.05	1984		44531	Urbis	Axia 24 LED 540mA	41 Watts	6.00 Metres	Galvanised Steel	
Y	17	STREET LIGHTING	BRADLEY ROAD	WALTHAM	524830.28	403970.85	1987		44532	1 Urbis LED	Teceo 40 LED 500mA	64 Watts	6.00 Metres	Galvanised Steel	
Y	18	STREET LIGHTING	BRADLEY ROAD	WALTHAM	524826.36	404005.09	1987		44533	1 Urbis LED	Teceo 40 LED 500mA	64 Watts	6.00 Metres	Galvanised Steel	
Y	1	STREET LIGHTING	MEADOW CROFT	WALTHAM	526017.75	404257.22	1996		53471	Urbis	Axia 16 LED 350mA	19 Watts	5.00 Metres	Galvanised Steel	
Y	2	STREET LIGHTING	MEADOW CROFT	WALTHAM	525991.04	404274.5	1996		53472	Urbis	Axia 16 LED 350mA	19 Watts	5.00 Metres	Galvanised Steel	
Y	3	STREET LIGHTING	MEADOW CROFT	WALTHAM	525963.95	404266.72	1996		53473	Urbis	Axia 16 LED 350mA	19 Watts	5.00 Metres	Galvanised Steel	
Y	4	STREET LIGHTING	MEADOW CROFT	WALTHAM	525955.98	404287.66	1996		53474	Urbis	Axia 16 LED 350mA	19 Watts	5.00 Metres	Galvanised Steel	
Y	1	STREET LIGHTING	LUDGATE CLOSE	WALTHAM	525976.75	403986.79	2014	30/06/2014	62814	1 Urbis LED	Axia 16 LED 500mA	28 Watts	6.00 Metres	Galvanised Steel	
Y	2	STREET LIGHTING	LUDGATE CLOSE	WALTHAM	525937.89	403598.13	2014	30/06/2014	62815	1 Urbis LED	Axia 16 LED 500mA	28 Watts	6.00 Metres	Galvanised Steel	
Y	3	STREET LIGHTING	LUDGATE CLOSE	WALTHAM	525942.7	403993.82	2014	30/06/2014	62816	1 Urbis LED	Axia 16 LED 500mA	28 Watts	6.00 Metres	Galvanised Steel	
Y	4	STREET LIGHTING	LUDGATE CLOSE	WALTHAM	525955.99	404025.02	2014	30/06/2014	62817	1 Urbis LED	Axia 16 LED 500mA	28 Watts	6.00 Metres	Galvanised Steel	
Y	1	STREET LIGHTING	CHURCH CLOSE	WALTHAM	526072.45	403997.06	2002		45970	Urbis	Axia 16 LED 350mA	19 Watts	6.00 Metres	Stainless Steel	
Y	1	STREET LIGHTING	COTTAGERS PLOT	LACEBY	523387.7	407414.67	1986		46790	Urbis	Axia 16 LED 350mA	19 Watts	5.00 Metres	Galvanised Steel	
Y	2	STREET LIGHTING	COTTAGERS PLOT	LACEBY	523400.36	407373.79	1986		46791	Urbis	Axia 16 LED 350mA	19 Watts	5.00 Metres	Galvanised Steel	
Y	3	STREET LIGHTING	COTTAGERS PLOT	LACEBY	523405.68	407331.35	1986		46792	Urbis	Axia 16 LED 350mA	19 Watts	5.00 Metres	Galvanised Steel	
Y	4	STREET LIGHTING	COTTAGERS PLOT	LACEBY	523418.84	407280.75	1986		46793	Urbis	Axia 16 LED 350mA	19 Watts	5.00 Metres	Galvanised Steel	
Y	5	STREET LIGHTING	COTTAGERS PLOT	LACEBY	523427.48	407233.31	2019	28/08/2019	67500	Urbis	Axia 16 LED 350mA	19 Watts	6.00 Metres	Galvanised Steel	
Y	6	STREET LIGHTING	COTTAGERS PLOT	LACEBY	523433.27	407190.64	1996		46795	Urbis	Axia 16 LED 350mA	19 Watts	5.00 Metres	Galvanised Steel	
Y	7	STREET LIGHTING	COTTAGERS PLOT	LACEBY	523444.28	407151.53	1986		46796	Urbis	Axia 16 LED 350mA	19 Watts	5.00 Metres	Galvanised Steel	
Y	8	STREET LIGHTING	COTTAGERS PLOT	LACEBY	523453.65	407105.78	1986		46797	Urbis	Axia 16 LED 350mA	19 Watts	5.00 Metres	Galvanised Steel	
Y	9	STREET LIGHTING	COTTAGERS PLOT	LACEBY	523459.6	407058.44	1986		46798	Urbis	Axia 16 LED 350mA	19 Watts	5.00 Metres	Galvanised Steel	
Y	1	STREET LIGHTING	MARKHAM MEWS	WALTHAM	526575.85	403972.65	1998		53342	Urbis	Axia 16 LED 350mA	19 Watts	5.00 Metres	Galvanised Steel	
Y	2	STREET LIGHTING	MARKHAM MEWS	WALTHAM	526581.8	403941.83	1998		53343	Urbis	Axia 16 LED 350mA	19 Watts	5.00 Metres	Galvanised Steel	
Y	1	STREET LIGHTING	SHEARS COURT	WALTHAM	526643.56	404000.49	1998		57108	Urbis	Axia 16 LED 350mA	19 Watts	5.00 Metres	Galvanised Steel	
Y	2	STREET LIGHTING	SHEARS COURT	WALTHAM	526659.94	403986.92	1998		57109	Urbis	Axia 16 LED 350mA	19 Watts	5.00 Metres	Galvanised Steel	
Y	3	STREET LIGHTING	SHEARS COURT	WALTHAM	526651	403970	1998		57110	Urbis	Axia 16 LED 350mA	19 Watts	5.00 Metres	Galvanised Steel	
Y	1	STREET LIGHTING	THE DRIVE	WALTHAM	526510.49	403176.74	1997		58975	DW Windsor	Salisbury 15 LED	30 Watts	5.00 Metres	Steel	
Y	2	STREET LIGHTING	THE DRIVE	WALTHAM	526530.87	403191.54	1997		58976	DW Windsor	Salisbury 15 LED	30 Watts	5.00 Metres	Steel	
Y	3	STREET LIGHTING	THE DRIVE	WALTHAM	526545.3	403175.28	1997		58977	DW Windsor	Salisbury 15 LED	30 Watts	5.00 Metres	Steel	
Y	4	STREET LIGHTING	THE DRIVE	WALTHAM	526560.99	403145.35	1997		58978	DW Windsor	Salisbury 15 LED	30 Watts	5.00 Metres	Steel	
Y	5	STREET LIGHTING	THE DRIVE	WALTHAM	526583.52	403125.92	1997		58979	DW Windsor	Salisbury 15 LED	30 Watts	5.00 Metres	Steel	
Y	6	STREET LIGHTING	THE DRIVE	WALTHAM	526542.89	403224.52	1997		58980	DW Windsor	Salisbury 15 LED	30 Watts	5.00 Metres	Steel	
Y	7	STREET LIGHTING	THE DRIVE	WALTHAM	526517.45	403233.45	1997		58981	DW Windsor	Salisbury 15 LED	30 Watts	4.00 Metres	Steel	
Y	8	STREET LIGHTING	THE DRIVE	WALTHAM	526492.51	403249.33	1997		58982	DW Windsor	Salisbury 15 LED	30 Watts	4.00 Metres	Steel	
Y	9	STREET LIGHTING	THE DRIVE	WALTHAM	526554.67	403254.97	1997		58983	DW Windsor	Salisbury 15 LED	30 Watts	5.00 Metres	Steel	
Y	10	STREET LIGHTING	THE DRIVE	WALTHAM	526565.55	403272.12	1997		58984	DW Windsor	Salisbury 15 LED	30 Watts	4.00 Metres	Steel	
Y	11	STREET LIGHTING	THE DRIVE	WALTHAM	526543.91	403283.95	1997		58985	DW Windsor	Salisbury 15 LED	30 Watts	4.00 Metres	Steel	
Y	12	STREET LIGHTING	THE DRIVE	WALTHAM	526552.39	403307.06	1997		58986	DW Windsor	Salisbury 15 LED	30 Watts	4.00 Metres	Steel	
Y	13	STREET LIGHTING	THE DRIVE	WALTHAM	526576.19	403315.6	1997		58987	DW Windsor	Salisbury 15 LED	30 Watts	4.00 Metres	Steel	
Y	14	STREET LIGHTING	THE DRIVE	WALTHAM	526593.53	403348.7	1997		58988	DW Windsor	Salisbury 15 LED	30 Watts	4.00 Metres	Steel	
Y	15	STREET LIGHTING	THE DRIVE	WALTHAM	526619.22	403366.11	1997		58989	DW Windsor	Salisbury 15 LED	30 Watts	4.00 Metres	Steel	
Y	16	STREET LIGHTING	THE DRIVE	WALTHAM	526651.63	403359.21	1997		58990	DW Windsor	Salisbury 15 LED	30 Watts	4.00 Metres	Steel	
Y	17	STREET LIGHTING	THE DRIVE	WALTHAM	526670.36	403336.23	1997		58991	DW Windsor	Salisbury 15 LED	30 Watts	4.00 Metres	Steel	
Y	18	STREET LIGHTING	THE DRIVE	WALTHAM	526703.02	403345.41	1997		58992	DW Windsor	Salisbury 15 LED	30 Watts	4.00 Metres	Steel	
Y	19	STREET LIGHTING	THE DRIVE	WALTHAM	526721.63	403358.51	1997		58993	DW Windsor	Salisbury 15 LED	30 Watts	4.00 Metres	Steel	
Y	1	STREET LIGHTING	WILLOW PARK	BARNOLDBY LE BECK	524857.31	403471.44	1995		60746	Urbis	Axia 16 LED 350mA	19 Watts	5.00 Metres	Galvanised Steel	
Y	2	STREET LIGHTING	WILLOW PARK	BARNOLDBY LE BECK	524851.64	403494.43	1995		60747	Urbis	Axia 16 LED 350mA	19 Watts	5.00 Metres	Galvanised Steel	
Y	3	STREET LIGHTING	WILLOW PARK	BARNOLDBY LE BECK	524845.37	403522.89	1995		60748	Urbis	Axia 16 LED 350mA	19 Watts	5.00 Metres	Galvanised Steel	
Y	4	STREET LIGHTING	WILLOW PARK	BARNOLDBY LE BECK	524822.07	403536.66	1995		60749	Urbis	Axia 16 LED 350mA	19 Watts	5.00 Metres	Galvanised Steel	
Y	5	STREET LIGHTING	WILLOW PARK	BARNOLDBY LE BECK	524802.43	403563.09	1995		60750	Urbis	Axia 16 LED 350mA	19 Watts	5.00 Metres	Galvanised Steel	
Y	6	STREET LIGHTING	WILLOW PARK	BARNOLDBY LE BECK	524804.25	403597.22	1995		60751	Urbis	Axia 16 LED 350mA	19 Watts	5.00 Metres	Galvanised Steel	
Y	7	STREET LIGHTING	WILLOW PARK	BARNOLDBY LE BECK	524790.89	403618.58	1995		60752	Urbis	Axia 16 LED 350mA	19 Watts	5.00 Metres	Galvanised Steel	
Y	8	STREET LIGHTING	WILLOW PARK	BARNOLDBY LE BECK	524779.14	403634.79	1995		60753	Urbis	Axia 16 LED 350mA	19 Watts	5.00 Metres	Galvanised Steel	
Y	1	STREET LIGHTING	KEMESHAME COURT	WALTHAM	526514.21	403940.63	1996		51519	Urbis	Axia 16 LED 350mA	19 Watts	5.00 Metres	Galvanised Steel	
Y	2	STREET LIGHTING	KEMESHAME COURT	WALTHAM	526496.48	403931.39	1996		51520	Urbis	Axia 16 LED 350mA	19 Watts	5.00 Metres	Galvanised Steel	
Y	3	STREET LIGHTING	KEMESHAME COURT	WALTHAM	526492.31	403912.84	1996		51521	Urbis	Axia 16 LED 350mA	19 Watts	5.00 Metres	Galvanised Steel	
Y	1	STREET LIGHTING	WOBURN CLOSE	WALTHAM	525165.04	403872.83	1989		61078	Urbis	Axia 16 LED 350mA	19 Watts	5.00 Metres	Galvanised Steel	
Y	2	STREET LIGHTING	WOBURN CLOSE	WALTHAM	525145.04	403896.31	1989		61079	Urbis	Axia 16 LED 350mA	19 Watts	5.00 Metres	Galvanised Steel	
Y	1	STREET LIGHTING	NUNNERLEY PLACE	WALTHAM	526645.94	404033.33	1999		54286	Urbis	Axia 16 LED 350mA	19 Watts	5.00 Metres	Galvanised Steel	
Y	2	STREET LIGHTING	NUNNERLEY PLACE	WALTHAM	526639.28	404049.27	1999		54287	Urbis	Axia 16 LED 350mA	19 Watts	5.00 Metres	Galvanised Steel	
Y	1	STREET LIGHTING	GEIPEL CLOSE	WALTHAM	526581.26	404013.91	1999		49146	Urbis	Axia 16 LED 350mA	19 Watts	5.00 Metres	Galvanised Steel	
Y	2	STREET LIGHTING	GEIPEL CLOSE	WALTHAM	526576.96	404028.9	1999		49148	Urbis	Axia 16 LED 350mA	19 Watts	5.00 Metres	Galvanised Steel	
Y	3	STREET LIGHTING	GEIPEL CLOSE	WALTHAM	526559.97	404020.24	1999		49147	Urbis	Axia 16 LED 350mA	19 Watts	5.00 Metres	Galvanised Steel	
Y	1	STREET LIGHTING	CAMARGUE AVENUE	WALTHAM	526482.83	404054.06	1990		45121	1 Urbis LED	Axia 16 LED 500mA	28 Watts	5.00 Metres	Galvanised Steel	
Y	2	STREET LIGHTING	CAMARGUE AVENUE	WALTHAM	526489.92	404029.95	1990		45122	1 Urbis LED	Axia 16 LED 500mA	28 Watts	5.00 Metres	Galvanised Steel	
Y	3	STREET LIGHTING	CAMARGUE AVENUE	WALTHAM	526486.63	404002.61	1990		45123	1 Urbis LED	Axia 16 LED 500mA	28 Watts	5.00 Metres	Galvanised Steel	
Y	4	STREET LIGHTING	CAMARGUE AVENUE	WALTHAM	526483.57	403967.84	1990		45124	1 Urbis LED	Axia 16 LED 500mA	28 Watts	5.00 Metres	Galvanised Steel	
Y	5	STREET LIGHTING	CAMARGUE AVENUE	WALTHAM	526507.12	403963.09	1990		45125	1 Urbis LED	Axia 16 LED 500mA	28 Watts	5.00 Metres	Galvanised Steel	
Y	6	STREET LIGHTING	CAMARGUE AVENUE	WALTHAM	526536.86	403962.39	1994		45126	1 Urbis LED	Axia 16 LED 500mA	28 Watts	5.00 Metres	Galvanised Steel	
Y	7	STREET LIGHTING	CAMARGUE AVENUE	WALTHAM	526564.08	403981.7	1994		45127	1 Urbis LED	Axia 16 LED 500mA	28 Watts	5.00 Metres	Galvanised Steel	
Y	8	STREET LIGHTING	CAMARGUE AVENUE	WALTHAM	526592.56	403997.71	1994		45128	1 Urbis LED	Axia 16 LED 500mA	28 Watts	5.00 Metres	Galvanised Steel	
Y	9	STREET LIGHTING	CAMARGUE AVENUE	WALTHAM	526610.41	404013.34	1998		45129	1 Urbis LED	Axia 16 LED 500mA	28 Watts	5.00 Metres	Galvanised Steel	
Y	10	STREET LIGHTING	CAMARGUE AVENUE	WALTHAM	526633.06	404015.69	1994		45130	1 Urbis LED	Axia 16 LED 500mA	28 Watts	5.00 Metres	Galvanised Steel	
Y	11	STREET LIGHTING	CAMARGUE AVENUE	WALTHAM	526662.67	404017.78	1994		45131	1 Urbis LED	Axia 16 LED 500mA	28 Watts	5.00 Metres	Galvanised Steel	
Y	1	STREET LIGHTING	SCOUTS LANE	HUMBERSTON	528897.92	404850.55	2017	01/03/2017	69259	Urbis	Axia 16 LED 350mA	19 Watts	6.00 Metres	Galvanised Steel	
Y	2	STREET LIGHTING	SCOUTS LANE	HUMBERSTON	528902.91	404813.36	2017	01/03/2017	69260	Urbis	Axia 16 LED 350mA	19 Watts	6.00 Metres	Galvanised Steel	
Y	3	STREET LIGHTING	SCOUTS LANE	HUMBERSTON	528911.65	404772.93	2017	01/03/2017	69261	Urbis	Axia 16 LED 350mA	19 Watts	6.00 Metres	Galvanised Steel	
Y	4	STREET LIGHTING	SCOUTS LANE	HUMBERSTON	528918.14	404743.98	2017	01/03/2017	69262	Urbis	Axia 16 LED 350mA	19 Watts	6.00 Metres	Galvanised Steel	
Y	5	STREET LIGHTING	SCOUTS LANE	HUMBERSTON	528925.87	404710.03	2017	01/03/2017	69263	Urbis	Axia 16 LED 350mA	19 Watts	6.00 Metres	Galvanised Steel	
Y	6	STREET LIGHTING	SCOUTS LANE	HUMBERSTON	528934.86	404670.11	2017	01/03/2017	69264	Urbis	Axia 16 LED 350mA	19 Watts	6.00 Metres	Galvanised Steel	
Y	7	STREET LIGHTING	SCOUTS LANE	HUMBERSTON	528941.11	404639.15	2017	01/03/2017	69265	Urbis	Axia 16 LED 350mA	19 Watts	6.00 Metres	Galvanised Steel	
Y	8	STREET LIGHTING	SCOUTS LANE	HUMBERSTON	528948.74	404602.22	2017	01/03/2017	69266	Urbis	Axia 16 LED 350mA	19 Watts	6.00 Metres	Galvanised Steel	
Y	1	STREET LIGHTING	ABBOTTS GRANGE	HUMBERSTON	529244.26	404946.24	1972		42705	1 Urbis LED	Axia 16 LED 500mA	28 Watts	5.00 Metres	Galvanised Steel	
Y	2	STREET LIGHTING	ABBOTTS GRANGE	HUMBERSTON	529244.67	404977.86	1972		42706	1 Urbis LED	Axia 16 LED 500mA	28 Watts	5.00 Metres	Galvanised Steel	
Y	3	STREET LIGHTING	ABBOTTS GRANGE	HUMBERSTON	529219.96	405001.86	1972		42707	1 Urbis LED	Axia 16 LED 500mA	28 Watts	5.00 Metres	Galvanised Steel	
Y	4	STREET LIGHTING	ABBOTTS GRANGE	HUMBERSTON	529189.99	405010.37	1972		42708	1 Urbis LED	Axia 16 LED 500mA	28 Watts	5.00 Metres	Galvanised Steel	
Y	1	STREET LIGHTING	ALBERY WAY	NEW WALTHAM	528113.63	404920.83	1990		42867	1 Urbis LED	Axia 16 LED 500mA	28 Watts	5.00 Metres	Galvanised Steel	
Y	2	STREET LIGHTING	ALBERY WAY	NEW WALTHAM	528106.17	404943.36	1990		42868	1 Urbis LED	Axia 16 LED 500mA	28 Watts	5.00 Metres	Galvanised Steel	
Y	3	STREET LIGHTING	ALBERY WAY	NEW WALTHAM	528096.8	404969.81	1998		42869	1 Urbis LED	Axia 16 LED 500mA	28 Watts	5.00 Metres	Galvanised Steel	
Y	4	STREET LIGHTING	ALBERY WAY	NEW WALTHAM	528092.37	404999.62	1998		42870	1 Urbis LED	Axia 16 LED 500mA	28 Watts	5.00 Metres	Galvanised Steel	
Y	5	STREET LIGHTING	ALBERY WAY	NEW WALTHAM	528069.15	405013.93	1998		42871	1 Urbis LED	Axia 16 LED 500mA	28 Watts	5.00 Metres	Galvanised Steel	
Y	6	STREET LIGHTING	ALBERY WAY	NEW WALTHAM	528065.6	405040.33	1998		42872	1 Urbis LED	Axia 16 LED 500mA	28 Watts	5.00 Metres	Galvanised Steel	
Y	7	STREET LIGHTING	ALBERY WAY	NEW WALTHAM	528043.83	405057.73	1998		42873	1 Urbis LED	Axia 16 LED 500mA	28 Watts	5.00 Metres	Galvanised Steel	
Y	8	STREET LIGHTING	ALBERY WAY	NEW WALTHAM	528032.57	405080.07	1999		42874	1 Urbis LED	Axia 16 LED 500mA	28 Watts	5.00 Metres	Galvanised Steel	
Y	9	STREET LIGHTING	ALBERY WAY	NEW WALTHAM	528033.71	405102.79	1999		42875	1 Urbis LED	Axia 16 LED 500mA	28 Watts	5.00 Metres	Galvanised Steel	
Y	10	STREET LIGHTING	ALBERY WAY	NEW WALTHAM	528017.13	405125.64	1999		42876	1 Urbis LED	Axia 16 LED 500mA	28 Watts	5.00 Metres	Galvanised Steel	
Y	11	STREET LIGHTING	ALBERY WAY	NEW WALTHAM	528016.81	405149.35	1999		42877	1 Urbis LED	Axia 16 LED 500mA	28 Watts	5.00 Metres	Galvanised Steel	

Y	12	STREET LIGHTING	ALBERY WAY	NEW WALTHAM	527994.67	405165.05	2001		42878	1 Urbis LED	Axia 16 LED 500mA	28 Watts	5.00 Metres	Galvanised Steel	
Y	13	STREET LIGHTING	ALBERY WAY	NEW WALTHAM	527983.97	405182.9	2001		42879	1 Urbis LED	Axia 16 LED 500mA	28 Watts	5.00 Metres	Galvanised Steel	
Y	14	STREET LIGHTING	ALBERY WAY	NEW WALTHAM	527981	405208.54	2001		42880	1 Urbis LED	Axia 16 LED 500mA	28 Watts	5.00 Metres	Galvanised Steel	
Y	15	STREET LIGHTING	ALBERY WAY	NEW WALTHAM	527976.69	405227.85	2001		42881	1 Urbis LED	Axia 16 LED 500mA	28 Watts	5.00 Metres	Galvanised Steel	
Y	16	STREET LIGHTING	ALBERY WAY	NEW WALTHAM	527961.76	405247.01	2001		42882	1 Urbis LED	Axia 16 LED 500mA	28 Watts	5.00 Metres	Galvanised Steel	
Y	17	STREET LIGHTING	ALBERY WAY	NEW WALTHAM	527963.51	405268.06	2001		42883	1 Urbis LED	Axia 16 LED 500mA	28 Watts	5.00 Metres	Galvanised Steel	
Y	18	STREET LIGHTING	ALBERY WAY	NEW WALTHAM	527955.59	405284.04	2021	10/12/2021	68778	Urbis	Axia 24 LED 500mA	28 Watts	6.00 Metres	Galvanised Steel	
Y	1	STREET LIGHTING	ALDWYCH CROFT	NEW WALTHAM	528211.43	404837.12	1998		42976	Urbis	Axia 16 LED 350mA	19 Watts	5.00 Metres	Galvanised Steel	
Y	2	STREET LIGHTING	ALDWYCH CROFT	NEW WALTHAM	528200.62	404826.78	1998		42977	Urbis	Axia 16 LED 350mA	19 Watts	5.00 Metres	Galvanised Steel	
Y	3	STREET LIGHTING	ALDWYCH CROFT	NEW WALTHAM	528161.88	404822.41	1998		42978	Urbis	Axia 16 LED 350mA	19 Watts	5.00 Metres	Galvanised Steel	
Y	4	STREET LIGHTING	ALDWYCH CROFT	NEW WALTHAM	528156.82	404808.68	1998		42979	Urbis	Axia 16 LED 350mA	19 Watts	5.00 Metres	Galvanised Steel	
Y	1	STREET LIGHTING	AMETHYST COURT	NEW WALTHAM	528757.74	405364.96	1988		43151	Urbis	Axia 16 LED 350mA	19 Watts	5.00 Metres	Galvanised Steel	
Y	2	STREET LIGHTING	AMETHYST COURT	NEW WALTHAM	528738.25	405389.33	1989		43152	Urbis	Axia 16 LED 350mA	19 Watts	5.00 Metres	Galvanised Steel	
Y	3	STREET LIGHTING	AMETHYST COURT	NEW WALTHAM	528739.64	405420.53	1989		43153	Urbis	Axia 16 LED 350mA	19 Watts	5.00 Metres	Galvanised Steel	
Y	4	STREET LIGHTING	AMETHYST COURT	NEW WALTHAM	528755.46	405444.08	1989		43154	Urbis	Axia 16 LED 350mA	19 Watts	5.00 Metres	Galvanised Steel	
Y	5	STREET LIGHTING	AMETHYST COURT	NEW WALTHAM	528784.45	405445.62	1989		43155	Urbis	Axia 16 LED 350mA	19 Watts	5.00 Metres	Galvanised Steel	
Y	1	STREET LIGHTING	ANNINGSON LANE	NEW WALTHAM	528559.69	405105.11	2014		62843	Urbis	Axia 16 LED 350mA	19 Watts	6.00 Metres	Galvanised Steel	
Y	2	STREET LIGHTING	ANNINGSON LANE	NEW WALTHAM	528524.41	405092.02	2015		62844	Urbis	Axia 16 LED 350mA	19 Watts	6.00 Metres	Galvanised Steel	
Y	3	STREET LIGHTING	ANNINGSON LANE	NEW WALTHAM	528492.35	405079.67	2014		62845	Urbis	Axia 16 LED 350mA	19 Watts	6.00 Metres	Galvanised Steel	
Y	1	STREET LIGHTING	BARBICAN WAY	NEW WALTHAM	528310.67	404867.71	1990		43587	1 Urbis LED	Axia 16 LED 500mA	28 Watts	5.00 Metres	Galvanised Steel	
Y	2	STREET LIGHTING	BARBICAN WAY	NEW WALTHAM	528278.51	404863.84	1990		43588	1 Urbis LED	Axia 16 LED 500mA	28 Watts	5.00 Metres	Galvanised Steel	
Y	3	STREET LIGHTING	BARBICAN WAY	NEW WALTHAM	528253.07	404868.97	1990		43589	1 Urbis LED	Axia 16 LED 500mA	28 Watts	5.00 Metres	Galvanised Steel	
Y	4	STREET LIGHTING	BARBICAN WAY	NEW WALTHAM	528254.08	404855.68	1990		43590	1 Urbis LED	Axia 16 LED 500mA	28 Watts	5.00 Metres	Galvanised Steel	
Y	5	STREET LIGHTING	BARBICAN WAY	NEW WALTHAM	528230.54	404853.59	1990		43591	1 Urbis LED	Axia 16 LED 500mA	28 Watts	5.00 Metres	Galvanised Steel	
Y	6	STREET LIGHTING	BARBICAN WAY	NEW WALTHAM	528205.6	404853.53	1990		43592	1 Urbis LED	Axia 16 LED 500mA	28 Watts	5.00 Metres	Galvanised Steel	
Y	7	STREET LIGHTING	BARBICAN WAY	NEW WALTHAM	528188.9	404858.78	1990		43593	1 Urbis LED	Axia 16 LED 500mA	28 Watts	5.00 Metres	Galvanised Steel	
Y	8	STREET LIGHTING	BARBICAN WAY	NEW WALTHAM	528183.2	404885.04	1990		43594	1 Urbis LED	Axia 16 LED 500mA	28 Watts	5.00 Metres	Galvanised Steel	
Y	9	STREET LIGHTING	BARBICAN WAY	NEW WALTHAM	528183.83	404912.57	1990		43595	1 Urbis LED	Axia 16 LED 500mA	28 Watts	5.00 Metres	Galvanised Steel	
Y	1	STREET LIGHTING	BARON AVENUE	NEW WALTHAM	528729.67	405131.85	2014	29/07/2014	62846	1 Urbis LED	Axia 16 LED 500mA	28 Watts	6.00 Metres	Galvanised Steel	
Y	2	STREET LIGHTING	BARON AVENUE	NEW WALTHAM	528736.76	405160.95	2014	29/07/2014	62847	1 Urbis LED	Axia 16 LED 500mA	28 Watts	6.00 Metres	Galvanised Steel	
Y	3	STREET LIGHTING	BARON AVENUE	NEW WALTHAM	528735.5	405206.11	2014	29/07/2014	62848	1 Urbis LED	Axia 16 LED 500mA	28 Watts	6.00 Metres	Galvanised Steel	
Y	1	STREET LIGHTING	BRUNTON WAY	NEW WALTHAM	528643.08	404488.2	2014	30/06/2014	62849	1 Urbis LED	Axia 16 LED 500mA	28 Watts	6.00 Metres	Galvanised Steel	
Y	2	STREET LIGHTING	BRUNTON WAY	NEW WALTHAM	528683.46	404509.78	2014	30/06/2014	62850	1 Urbis LED	Axia 16 LED 500mA	28 Watts	6.00 Metres	Galvanised Steel	
Y	1	STREET LIGHTING	CANON OAKES COURT	HUMBERSTON	529047.7	404874.72	1988		45214	Urbis	Axia 16 LED 350mA	19 Watts	5.00 Metres	Galvanised Steel	
Y	2	STREET LIGHTING	CANON OAKES COURT	HUMBERSTON	529053.02	404844.53	1988		45215	Urbis	Axia 16 LED 350mA	19 Watts	5.00 Metres	Galvanised Steel	
Y	3	STREET LIGHTING	CANON OAKES COURT	HUMBERSTON	529058.33	404816.3	1988		45216	Urbis	Axia 16 LED 350mA	19 Watts	5.00 Metres	Galvanised Steel	
Y	4	STREET LIGHTING	CANON OAKES COURT	HUMBERSTON	529047.95	404785.86	1988		45217	Urbis	Axia 16 LED 350mA	19 Watts	5.00 Metres	Galvanised Steel	
Y	1	STREET LIGHTING	CARDIFF AVENUE	NEW WALTHAM	528094.95	404645.41	2003		45230	Urbis	Axia 16 LED 350mA	19 Watts	6.00 Metres	Stainless Steel	
Y	2	STREET LIGHTING	CARDIFF AVENUE	NEW WALTHAM	528085.23	404673.86	1983		45231	Urbis	Axia 16 LED 350mA	19 Watts	5.00 Metres	Galvanised Steel	
Y	3	STREET LIGHTING	CARDIFF AVENUE	NEW WALTHAM	528076.75	404700.31	1983		45232	Urbis	Axia 16 LED 350mA	19 Watts	5.00 Metres	Galvanised Steel	
Y	4	STREET LIGHTING	CARDIFF AVENUE	NEW WALTHAM	528068.39	404727.47	1983		45233	Urbis	Axia 16 LED 350mA	19 Watts	5.00 Metres	Galvanised Steel	
Y	5	STREET LIGHTING	CARDIFF AVENUE	NEW WALTHAM	528061.18	404760.7	2024	06/08/2024	69965	Urbis	Axia 16 LED 350mA	19 Watts	6.00 Metres	Galvanised Steel	
Y	6	STREET LIGHTING	CARDIFF AVENUE	NEW WALTHAM	528068.65	404788.16	1983		45235	Urbis	Axia 16 LED 350mA	19 Watts	5.00 Metres	Galvanised Steel	
Y	7	STREET LIGHTING	CARDIFF AVENUE	NEW WALTHAM	528067.51	404821.14	1983		45236	Urbis	Axia 16 LED 350mA	19 Watts	5.00 Metres	Galvanised Steel	
Y	8	STREET LIGHTING	CARDIFF AVENUE	NEW WALTHAM	528057.89	404851.58	1983		45237	Urbis	Axia 16 LED 350mA	19 Watts	5.00 Metres	Galvanised Steel	
Y	1	STREET LIGHTING	CARISBROOKE CLOSE	NEW WALTHAM	528753.56	405332.27	1987		45240	Urbis	Axia 16 LED 350mA	19 Watts	5.00 Metres	Galvanised Steel	
Y	2	STREET LIGHTING	CARISBROOKE CLOSE	NEW WALTHAM	528756.1	405304.61	1987		45241	Urbis	Axia 16 LED 350mA	19 Watts	5.00 Metres	Galvanised Steel	
Y	3	STREET LIGHTING	CARISBROOKE CLOSE	NEW WALTHAM	528777.72	405282.17	2022	28/09/2022	69032	Urbis	Axia 16 LED 350mA	19 Watts	6.00 Metres	Galvanised Steel	
Y	4	STREET LIGHTING	CARISBROOKE CLOSE	NEW WALTHAM	528797.99	405283.47	1987		45243	Urbis	Axia 16 LED 350mA	19 Watts	5.00 Metres	Galvanised Steel	
Y	1	STREET LIGHTING	CONISBOROUGH AVENUE	NEW WALTHAM	527920.91	404736.35	1983		46518	1 Urbis LED	Axia 16 LED 500mA	28 Watts	5.00 Metres	Galvanised Steel	
Y	2	STREET LIGHTING	CONISBOROUGH AVENUE	NEW WALTHAM	527949.26	404745.4	1983		46519	1 Urbis LED	Axia 16 LED 500mA	28 Watts	5.00 Metres	Galvanised Steel	
Y	3	STREET LIGHTING	CONISBOROUGH AVENUE	NEW WALTHAM	527971.16	404752.17	1983		46520	1 Urbis LED	Axia 16 LED 500mA	28 Watts	5.00 Metres	Galvanised Steel	
Y	4	STREET LIGHTING	CONISBOROUGH AVENUE	NEW WALTHAM	527996.85	404762.66	1983		46521	1 Urbis LED	Axia 16 LED 500mA	28 Watts	5.00 Metres	Galvanised Steel	
Y	5	STREET LIGHTING	CONISBOROUGH AVENUE	NEW WALTHAM	527998.12	404789.12	1983		46522	1 Urbis LED	Axia 16 LED 500mA	28 Watts	5.00 Metres	Galvanised Steel	
Y	6	STREET LIGHTING	CONISBOROUGH AVENUE	NEW WALTHAM	527989.51	404814.75	1983		46523	1 Urbis LED	Axia 16 LED 500mA	28 Watts	5.00 Metres	Galvanised Steel	
Y	7	STREET LIGHTING	CONISBOROUGH AVENUE	NEW WALTHAM	527981.03	404840.76	1983		46524	1 Urbis LED	Axia 16 LED 500mA	28 Watts	5.00 Metres	Galvanised Steel	
Y	1	STREET LIGHTING	DAVID PLACE	NEW WALTHAM	528399.91	404479.38	2014	30/06/2014	62851	1 Urbis LED	Axia 16 LED 500mA	28 Watts	6.00 Metres	Galvanised Steel	
Y	2	STREET LIGHTING	DAVID PLACE	NEW WALTHAM	528429.15	404486.4	2014	30/06/2014	62852	1 Urbis LED	Axia 16 LED 500mA	28 Watts	6.00 Metres	Galvanised Steel	
Y	3	STREET LIGHTING	DAVID PLACE	NEW WALTHAM	528457.89	404496.21	2014	30/06/2014	62853	1 Urbis LED	Axia 16 LED 500mA	28 Watts	6.00 Metres	Galvanised Steel	
Y	4	STREET LIGHTING	DAVID PLACE	NEW WALTHAM	528486.75	404506.46	2014	30/06/2014	62854	1 Urbis LED	Axia 16 LED 500mA	28 Watts	6.00 Metres	Galvanised Steel	
Y	1	STREET LIGHTING	DOMINION CLOSE	NEW WALTHAM	528322	404937.44	1988		47501	Urbis	Axia 16 LED 350mA	19 Watts	5.00 Metres	Galvanised Steel	
Y	2	STREET LIGHTING	DOMINION CLOSE	NEW WALTHAM	528357.57	404942.25	1988		47502	Urbis	Axia 16 LED 350mA	19 Watts	5.00 Metres	Galvanised Steel	
Y	1	STREET LIGHTING	DUNBAR AVENUE	NEW WALTHAM	527892.04	404725.82	2015	30/07/2015	47612	1 Urbis LED	Axia 16 LED 500mA	28 Watts	6.00 Metres	Galvanised Steel	
Y	2	STREET LIGHTING	DUNBAR AVENUE	NEW WALTHAM	527867.48	404735.51	1983		47613	1 Urbis LED	Axia 16 LED 500mA	28 Watts	5.00 Metres	Galvanised Steel	
Y	3	STREET LIGHTING	DUNBAR AVENUE	NEW WALTHAM	527853.05	404764.43	1983		47614	1 Urbis LED	Axia 16 LED 500mA	28 Watts	5.00 Metres	Galvanised Steel	
Y	4	STREET LIGHTING	DUNBAR AVENUE	NEW WALTHAM	527843.05	404796.2	1983		47615	1 Urbis LED	Axia 16 LED 500mA	28 Watts	5.00 Metres	Galvanised Steel	
Y	5	STREET LIGHTING	DUNBAR AVENUE	NEW WALTHAM	527852.29	404821.7	1983		47616	1 Urbis LED	Axia 16 LED 500mA	28 Watts	5.00 Metres	Galvanised Steel	
Y	6	STREET LIGHTING	DUNBAR AVENUE	NEW WALTHAM	527881.79	404831.77	1983		47617	1 Urbis LED	Axia 16 LED 500mA	28 Watts	5.00 Metres	Galvanised Steel	
Y	7	STREET LIGHTING	DUNBAR AVENUE	NEW WALTHAM	527917.99	404842.9	1983		47618	1 Urbis LED	Axia 16 LED 500mA	28 Watts	5.00 Metres	Galvanised Steel	
Y	8	STREET LIGHTING	DUNBAR AVENUE	NEW WALTHAM	527947.1	404851.7	1983		47619	1 Urbis LED	Axia 16 LED 500mA	28 Watts	5.00 Metres	Galvanised Steel	
Y	9	STREET LIGHTING	DUNBAR AVENUE	NEW WALTHAM	527977.91	404861.51	1983		47620	1 Urbis LED	Axia 16 LED 500mA	28 Watts	5.00 Metres	Galvanised Steel	
Y	10	STREET LIGHTING	DUNBAR AVENUE	NEW WALTHAM	528011.76	404874.01	1983		47621	1 Urbis LED	Axia 16 LED 500mA	28 Watts	5.00 Metres	Galvanised Steel	
Y	11	STREET LIGHTING	DUNBAR AVENUE	NEW WALTHAM	528043.02	404879.01	1983		47622	1 Urbis LED	Axia 16 LED 500mA	28 Watts	5.00 Metres	Galvanised Steel	
Y	12	STREET LIGHTING	DUNBAR AVENUE	NEW WALTHAM	528070.87	404895.28	1983		47623	1 Urbis LED	Axia 16 LED 500mA	28 Watts	5.00 Metres	Galvanised Steel	
Y	1	STREET LIGHTING	DURSLEY AVENUE	NEW WALTHAM	527914.82	404818.92	1983		47683	Urbis	Axia 16 LED 350mA	19 Watts	5.00 Metres	Galvanised Steel	
Y	2	STREET LIGHTING	DURSLEY AVENUE	NEW WALTHAM	527925.84	404785.57	1983		47684	Urbis	Axia 16 LED 350mA	19 Watts	5.00 Metres	Galvanised Steel	
Y	3	STREET LIGHTING	DURSLEY AVENUE	NEW WALTHAM	527888.12	404779.68	1983		47685	Urbis	Axia 16 LED 350mA	19 Watts	5.00 Metres	Galvanised Steel	
Y	1	STREET LIGHTING	EARL AVENUE	NEW WALTHAM	528795.88	405211.38	2014		62855	1 Urbis LED	Axia 16 LED 500mA	28 Watts	6.00 Metres	Galvanised Steel	
Y	2	STREET LIGHTING	EARL AVENUE	NEW WALTHAM	528809.55	405170.62	2014	29/07/2014	62856	1 Urbis LED	Axia 16 LED 500mA	28 Watts	6.00 Metres	Galvanised Steel	
Y	3	STREET LIGHTING	EARL AVENUE	NEW WALTHAM	528817.52	405117.07	1989		47697	Urbis	Axia 16 LED 350mA	19 Watts	5.00 Metres	Galvanised Steel	
Y	4	STREET LIGHTING	EARL AVENUE	NEW WALTHAM	528823.98	405073.72	2014	29/07/2014	62857	1 Urbis LED	Axia 16 LED 500mA	28 Watts	6.00 Metres	Galvanised Steel	
Y	5	STREET LIGHTING	EARL AVENUE	NEW WALTHAM	528824.61	405039.76	1989		47699	Urbis	Axia 16 LED 350mA	19 Watts	5.00 Metres	Galvanised Steel	
Y	1	STREET LIGHTING	FINDLAY CRESCENT	NEW WALTHAM	528656.48	404940.67	2014		62860	Urbis	Axia 16 LED 350mA	19 Watts	6.00 Metres	Galvanised Steel	
Y	2	STREET LIGHTING	FINDLAY CRESCENT	NEW WALTHAM	528692.18	404939.59	2014		62861	Urbis	Axia 16 LED 350mA	19 Watts	6.00 Metres	Galvanised Steel	
Y	1	STREET LIGHTING	GARDEN DRIVE	NEW WALTHAM	528394.86	405504.68	2014	29/07/2014	62862	1 Urbis LED	Axia 16 LED 500mA	28 Watts	6.00 Metres	Galvanised Steel	
Y	2	STREET LIGHTING	GARDEN DRIVE	NEW WALTHAM	528348.12	405485.85	2014	29/07/2014	62863	1 Urbis LED	Axia 16 LED 500mA	28 Watts	6.00 Metres	Galvanised Steel	
Y	3	STREET LIGHTING	GARDEN DRIVE	NEW WALTHAM	528318.03	405484.87	2014	29/07/2014	62864	1 Urbis LED	Axia 16 LED 500mA	28 Watts	6.00 Metres	Galvanised Steel	
Y	1	STREET LIGHTING	GARRICK LANE	NEW WALTHAM	528192.6	404949.23	1990		49104	Urbis	Axia 16 LED 350mA	19 Watts	5.00 Metres	Galvanised Steel	
Y	2	STREET LIGHTING	GARRICK LANE	NEW WALTHAM	528192.37	404973.37	1990		49105	Urbis	Axia 16 LED 350mA	19 Watts	5.00 Metres	Galvanised Steel	
Y	3	STREET LIGHTING	GARRICK LANE	NEW WALTHAM	528168.7	404992.63	2000		49106	Urbis	Axia 16 LED 350mA	19 Watts	5.00 Metres	Galvanised Steel	
Y	4	STREET LIGHTING	GARRICK LANE	NEW WALTHAM	528147.24	405003.71	2000		49107	Urbis	Axia 16 LED 350mA	19 Watts	5.00 Metres	Galvanised Steel	
Y	5	STREET LIGHTING	GARRICK LANE	NEW WALTHAM	528186.37	405004.52	1998		49108	Urbis	Axia 16 LED 350mA	19 Watts	5.00 Metres	Galvanised Steel	
Y	6	STREET LIGHTING	GARRICK LANE	NEW WALTHAM	528170.84	405024.22	1998		49109	Urbis	Axia 16 LED 350mA	19 Watts	5.00 Metres	Galvanised Steel	
Y	7	STREET LIGHTING	GARRICK LANE	NEW WALTHAM	528152.43	405046.52	1998		49110	Urbis	Axia 16 LED 350mA	19 Watts	5.00 Metres	Galvanised Steel	
Y	8	STREET LIGHTING	GARRICK LANE	NEW WALTHAM	528123.4	405057.97	1998		49111	Urbis	Axia 16 LED 350mA	19 Watts	5.00 Metres	Galvanised Steel	
Y	9	STREET LIGHTING	GARRICK LANE	NEW WALTHAM	528107.5	405076.48	1998		49112	Urbis	Axia 16 LED 350mA	19 Watts	5.00 Metres	Galvanised Steel	
Y	10	STREET LIGHTING	GARRICK LANE	NEW WALTHAM	528106.18	405102.76	1998		49113	Urbis	Axia 16 LED 350mA	19 Watts	5.00 Metres	Galvanised Steel	
Y	11	STREET LIGHTING	GARRICK LANE	NEW WALTHAM	528084.88	405122.38	1998		49114	Urbis	Axia 16 LED 350mA	19 Watts	5.00 Metres	Galvanised Steel	
Y	12	STREET LIGHTING	GARRICK LANE	NEW WALTHAM	528083.82	405149.66	2000		49115	Urbis	Axia 16 LED 350mA	19 Watts	5.00 Metres	Galvanised Steel	
Y	1	STREET LIGHTING	HAWTHORNE AVENUE	NEW WALTHAM	527811.19	404341.21	2014	30/06/2014	62865	1 Urbis LED	Axia 16 LED 500mA	28 Watts	6.00 Metres	Galvanised Steel	
Y	2	STREET LIGHTING	HAWTHORNE AVENUE	NEW WALTHAM	527841.82	404352.16	2014	30/06/2014	62866	1 Urbis LED	Axia 16 LED 500mA	28 Watts	6.00 Metres	Galvanised Steel	
Y	3	STREET LIGHTING	HAWTHORNE AVENUE	NEW WALTHAM	527883.34	404357.92	2014	30/06/2014	62867	1 Urbis LED	Axia 16 LED 500mA	28 Watts	6.00 Metres	Galvanised Steel	
Y	4	STREET LIGHTING	HAWTHORNE AVENUE	NEW WALTHAM	527925.24	404380.51	2014	30/06/2014	62868	1 Urbis LED	Axia 16 LED 500mA	28 Watts	6.00 Metres	Galvanised Steel	
Y	5	STREET LIGHTING	HAWTHORNE AVENUE	NEW WALTHAM	527972.2	404388.61	2014		62869	1 Urbis LED	Axia 16 LED 500mA	28 Watts	6.00 Metres	Galvanised Steel	
Y	6	STREET LIGHTING	HAWTHORNE AVENUE	NEW WALTHAM	528003.72	404407.16	2014		62870	1 Urbis LED	Axia 16 LED 500mA	28 Watts	6.00 Metres	Galvanised Steel	
Y	1	STREET LIGHTING	HOLME AVENUE	NEW WALTHAM	528586.74	405001.87	2009		50955	WRTL	Other	27 Watts	6.00 Metres	Steel	
Y	2	STREET LIGHTING	HOLME AVENUE	NEW WALTHAM	528568.8	404995.38	2009		50956	WRTL	Other	27 Watts	6.00 Metres	Steel	
Y	3	STREET LIGHTING	HOLME AVENUE	NEW WALTHAM	528547.9	404980.3	2009		50957	WRTL	Other	27 Watts	6.00 Metres	Steel	
Y	4	STREET LIGHTING	HOLME AVENUE	NEW WALTHAM	528517.86	404977.86	2009		50958	Urbis	Axia 16 LED 350mA	19 Watts	6.00 Metres	Steel	
Y	5	STREET LIGHTING	HOLME AVENUE	NEW WALTHAM	528494.37	404961.69	2009		50959	Urbis	Axia 16 LED 500mA	28 Watts	6.00 Metres	Steel	

Y	6	STREET LIGHTING	HOLME AVENUE	NEW WALTHAM	528467.66	404956.31	2009		50960	WRTL	Other	27 Watts	6.00 Metres	Steel	
Y	7	STREET LIGHTING	HOLME AVENUE	NEW WALTHAM	528454.32	404983.89	2009		50961	WRTL	Other	27 Watts	6.00 Metres	Steel	
Y	8	STREET LIGHTING	HOLME AVENUE	NEW WALTHAM	528452.24	405005.44	2009		50962	WRTL	Other	27 Watts	6.00 Metres	Steel	
Y	9	STREET LIGHTING	HOLME AVENUE	NEW WALTHAM	528435.13	405032.19	2009		50963	WRTL	Other	27 Watts	6.00 Metres	Steel	
Y	1	STREET LIGHTING	JUTLAND COURT	NEW WALTHAM	528891.46	405411.43	1992		51468	1 Urbis LED	Axia 16 LED 500mA	28 Watts	5.00 Metres	Galvanised Steel	
Y	2	STREET LIGHTING	JUTLAND COURT	NEW WALTHAM	528895.38	405442.06	1992		51469	1 Urbis LED	Axia 16 LED 500mA	28 Watts	5.00 Metres	Galvanised Steel	
Y	3	STREET LIGHTING	JUTLAND COURT	NEW WALTHAM	528883.49	405473.53	1992		51470	1 Urbis LED	Axia 16 LED 500mA	28 Watts	5.00 Metres	Galvanised Steel	
Y	1	STREET LIGHTING	KAYMILE CLOSE	NEW WALTHAM	528235.1	404511.78	1975		51480	Urbis	Axia 16 LED 350mA	19 Watts	5.00 Metres	Galvanised Steel	
Y	2	STREET LIGHTING	KAYMILE CLOSE	NEW WALTHAM	528234.72	404537.41	1975		51481	Urbis	Axia 16 LED 350mA	19 Watts	5.00 Metres	Galvanised Steel	
Y	3	STREET LIGHTING	KAYMILE CLOSE	NEW WALTHAM	528199.91	404542.28	1975		51482	Urbis	Axia 16 LED 350mA	19 Watts	5.00 Metres	Galvanised Steel	
Y	1	STREET LIGHTING	KENFORD COURT	NEW WALTHAM	528469.78	405348.34	1985		51529	Urbis	Axia 16 LED 350mA	19 Watts	5.00 Metres	Galvanised Steel	
Y	2	STREET LIGHTING	KENFORD COURT	NEW WALTHAM	528440.29	405337.52	1985		51530	Urbis	Axia 16 LED 350mA	19 Watts	5.00 Metres	Galvanised Steel	
Y	3	STREET LIGHTING	KENFORD COURT	NEW WALTHAM	528410.04	405341.51	1985		51531	Urbis	Axia 16 LED 350mA	19 Watts	5.00 Metres	Galvanised Steel	
Y	4	STREET LIGHTING	KENFORD COURT	NEW WALTHAM	528384.34	405331.07	1985		51532	Urbis	Axia 16 LED 350mA	19 Watts	5.00 Metres	Galvanised Steel	
Y	5	STREET LIGHTING	KENFORD COURT	NEW WALTHAM	528354.35	405325.81	1985		51533	Urbis	Axia 16 LED 350mA	19 Watts	5.00 Metres	Galvanised Steel	
Y	1	STREET LIGHTING	LEDBURY DRIVE	NEW WALTHAM	528837.53	405411.61	1992		52413	Urbis	Axia 16 LED 350mA	19 Watts	5.00 Metres	Galvanised Steel	
Y	2	STREET LIGHTING	LEDBURY DRIVE	NEW WALTHAM	528842.85	405440.66	1992		52414	Urbis	Axia 16 LED 350mA	19 Watts	5.00 Metres	Galvanised Steel	
Y	3	STREET LIGHTING	LEDBURY DRIVE	NEW WALTHAM	528833.36	405469.02	1992		52415	Urbis	Axia 16 LED 350mA	19 Watts	5.00 Metres	Galvanised Steel	
Y	4	STREET LIGHTING	LEDBURY DRIVE	NEW WALTHAM	528804.37	405484.14	1992		52416	Urbis	Axia 16 LED 350mA	19 Watts	5.00 Metres	Galvanised Steel	
Y	5	STREET LIGHTING	LEDBURY DRIVE	NEW WALTHAM	528783.75	405509.16	2023	28/02/2023	69200	Urbis	Axia 16 LED 350mA	19 Watts	6.00 Metres	Galvanised Steel	
Y	6	STREET LIGHTING	LEDBURY DRIVE	NEW WALTHAM	528762.83	405507.21	2023	14/02/2023	69201	Urbis	Axia 16 LED 350mA	19 Watts	6.00 Metres	Galvanised Steel	
Y	7	STREET LIGHTING	LEDBURY DRIVE	NEW WALTHAM	528814.63	405501.11	1992		52419	Urbis	Axia 16 LED 350mA	19 Watts	5.00 Metres	Galvanised Steel	
Y	8	STREET LIGHTING	LEDBURY DRIVE	NEW WALTHAM	528821.33	405518.64	1992		52420	Urbis	Axia 16 LED 350mA	19 Watts	5.00 Metres	Galvanised Steel	
Y	9	STREET LIGHTING	LEDBURY DRIVE	NEW WALTHAM	528832.73	405504.15	1992		52421	Urbis	Axia 16 LED 350mA	19 Watts	5.00 Metres	Galvanised Steel	
Y	1	STREET LIGHTING	LINDISFARNE AVENUE	NEW WALTHAM	527992.17	404746.27	1980		52562	Urbis	Axia 16 LED 350mA	19 Watts	5.00 Metres	Galvanised Steel	
Y	2	STREET LIGHTING	LINDISFARNE AVENUE	NEW WALTHAM	528003.18	404714.82	1980		52563	Urbis	Axia 16 LED 350mA	19 Watts	5.00 Metres	Galvanised Steel	
Y	3	STREET LIGHTING	LINDISFARNE AVENUE	NEW WALTHAM	528012.67	404686.34	1980		52564	Urbis	Axia 16 LED 350mA	19 Watts	5.00 Metres	Galvanised Steel	
Y	1	STREET LIGHTING	MAPLE GROVE	NEW WALTHAM	527861.07	404270.04	2014	30/06/2014	62876	1 Urbis LED	Axia 16 LED 500mA	28 Watts	6.00 Metres	Galvanised Steel	
Y	2	STREET LIGHTING	MAPLE GROVE	NEW WALTHAM	527906.01	404282.38	2014	30/06/2014	62877	1 Urbis LED	Axia 16 LED 500mA	28 Watts	6.00 Metres	Galvanised Steel	
Y	3	STREET LIGHTING	MAPLE GROVE	NEW WALTHAM	527947.14	404296.68	2014	30/06/2014	62878	1 Urbis LED	Axia 16 LED 500mA	28 Watts	6.00 Metres	Galvanised Steel	
Y	4	STREET LIGHTING	MAPLE GROVE	NEW WALTHAM	527984.74	404309.82	2014	30/06/2014	62879	1 Urbis LED	Axia 16 LED 500mA	28 Watts	6.00 Metres	Galvanised Steel	
Y	5	STREET LIGHTING	MAPLE GROVE	NEW WALTHAM	528029.17	404318.62	2014	30/06/2014	62880	1 Urbis LED	Axia 16 LED 500mA	28 Watts	6.00 Metres	Galvanised Steel	
Y	1	STREET LIGHTING	MARQUIS AVENUE	NEW WALTHAM	528666.74	405136.05	2002		53385	1 Urbis LED	Axia 16 LED 500mA	28 Watts	6.00 Metres	Stainless Steel	
Y	2	STREET LIGHTING	MARQUIS AVENUE	NEW WALTHAM	528694.07	405125.24	2002		53386	1 Urbis LED	Axia 16 LED 500mA	28 Watts	6.00 Metres	Stainless Steel	
Y	3	STREET LIGHTING	MARQUIS AVENUE	NEW WALTHAM	528714.42	405103.78	2002		53387	1 Urbis LED	Axia 16 LED 500mA	28 Watts	6.00 Metres	Stainless Steel	
Y	4	STREET LIGHTING	MARQUIS AVENUE	NEW WALTHAM	528770.56	405108.66	2014		62883	1 Urbis LED	Axia 16 LED 500mA	28 Watts	6.00 Metres	Galvanised Steel	
Y	1	STREET LIGHTING	MOORLAND DRIVE	NEW WALTHAM	528477.26	405403.85	2014	29/07/2014	62884	Urbis	Axia 16 LED 350mA	19 Watts	6.00 Metres	Galvanised Steel	
Y	2	STREET LIGHTING	MOORLAND DRIVE	NEW WALTHAM	528511.69	405399.1	2014	29/07/2014	62885	Urbis	Axia 16 LED 350mA	19 Watts	6.00 Metres	Galvanised Steel	
Y	3	STREET LIGHTING	MOORLAND DRIVE	NEW WALTHAM	528536.88	405417.78	2014	29/07/2014	62886	Urbis	Axia 16 LED 350mA	19 Watts	6.00 Metres	Galvanised Steel	
Y	4	STREET LIGHTING	MOORLAND DRIVE	NEW WALTHAM	528562.57	405427.59	2014	29/07/2014	62887	Urbis	Axia 16 LED 350mA	19 Watts	6.00 Metres	Galvanised Steel	
Y	1	STREET LIGHTING	PEAKS AVENUE	NEW WALTHAM	528573.7	405102.98	2013		54820	1 Urbis LED	Axia 16 LED 500mA	28 Watts	6.00 Metres	Steel	
Y	2	STREET LIGHTING	PEAKS AVENUE	NEW WALTHAM	528560.25	405130	2013		54821	1 Urbis LED	Axia 16 LED 500mA	28 Watts	6.00 Metres	Steel	
Y	3	STREET LIGHTING	PEAKS AVENUE	NEW WALTHAM	528559.28	405158.17	2013		54822	1 Urbis LED	Axia 16 LED 500mA	28 Watts	6.00 Metres	Steel	
Y	4	STREET LIGHTING	PEAKS AVENUE	NEW WALTHAM	528537.2	405191.96	2013		54823	1 Urbis LED	Axia 16 LED 500mA	28 Watts	6.00 Metres	Steel	
Y	5	STREET LIGHTING	PEAKS AVENUE	NEW WALTHAM	528524.13	405226.92	2013		54824	1 Urbis LED	Axia 16 LED 500mA	28 Watts	6.00 Metres	Steel	
Y	6	STREET LIGHTING	PEAKS AVENUE	NEW WALTHAM	528521.03	405259.74	2013		54825	1 Urbis LED	Axia 16 LED 500mA	28 Watts	6.00 Metres	Steel	
Y	7	STREET LIGHTING	PEAKS AVENUE	NEW WALTHAM	528503.12	405282.78	2013		54826	1 Urbis LED	Axia 16 LED 500mA	28 Watts	6.00 Metres	Steel	
Y	8	STREET LIGHTING	PEAKS AVENUE	NEW WALTHAM	528499.34	405317.44	2013		54827	1 Urbis LED	Axia 16 LED 500mA	28 Watts	6.00 Metres	Steel	
Y	9	STREET LIGHTING	PEAKS AVENUE	NEW WALTHAM	528479.5	405347.17	2013		54828	1 Urbis LED	Axia 16 LED 500mA	28 Watts	6.00 Metres	Steel	
Y	10	STREET LIGHTING	PEAKS AVENUE	NEW WALTHAM	528467.3	405379.7	2013		54829	1 Urbis LED	Axia 16 LED 500mA	28 Watts	6.00 Metres	Steel	
Y	11	STREET LIGHTING	PEAKS AVENUE	NEW WALTHAM	528455.68	405410.88	2013		54830	1 Urbis LED	Axia 16 LED 500mA	28 Watts	6.00 Metres	Steel	
Y	12	STREET LIGHTING	PEAKS AVENUE	NEW WALTHAM	528449.39	405451.25	2013		54831	1 Urbis LED	Axia 16 LED 500mA	28 Watts	6.00 Metres	Steel	
Y	13	STREET LIGHTING	PEAKS AVENUE	NEW WALTHAM	528439.51	405478.94	2013		54832	1 Urbis LED	Axia 16 LED 500mA	28 Watts	6.00 Metres	Steel	
Y	14	STREET LIGHTING	PEAKS AVENUE	NEW WALTHAM	528423.53	405502.27	2013		54833	1 Urbis LED	Axia 16 LED 500mA	28 Watts	6.00 Metres	Steel	
Y	15	STREET LIGHTING	PEAKS AVENUE	NEW WALTHAM	528441.45	405530.64	2013		54834	1 Urbis LED	Axia 16 LED 500mA	28 Watts	6.00 Metres	Steel	
Y	16	STREET LIGHTING	PEAKS AVENUE	NEW WALTHAM	528464.88	405554.46	2013		54835	1 Urbis LED	Axia 16 LED 500mA	28 Watts	6.00 Metres	Steel	
Y	17	STREET LIGHTING	PEAKS AVENUE	NEW WALTHAM	528488.31	405578.18	2013		54836	1 Urbis LED	Axia 16 LED 500mA	28 Watts	6.00 Metres	Steel	
Y	18	STREET LIGHTING	PEAKS AVENUE	NEW WALTHAM	528515.42	405581.38	2013		54837	1 Urbis LED	Axia 16 LED 500mA	28 Watts	6.00 Metres	Steel	
Y	19	STREET LIGHTING	PEAKS AVENUE	NEW WALTHAM	528536.04	405565.01	2013		54838	1 Urbis LED	Axia 16 LED 500mA	28 Watts	6.00 Metres	Steel	
Y	20	STREET LIGHTING	PEAKS AVENUE	NEW WALTHAM	528577.67	405565.79	2013		54839	1 Urbis LED	Axia 16 LED 500mA	28 Watts	6.00 Metres	Steel	
Y	21	STREET LIGHTING	PEAKS AVENUE	NEW WALTHAM	528608.17	405550.59	2013		54840	1 Urbis LED	Axia 16 LED 500mA	28 Watts	6.00 Metres	Steel	
Y	22	STREET LIGHTING	PEAKS AVENUE	NEW WALTHAM	528632.76	405574.41	2013		54841	1 Urbis LED	Axia 16 LED 500mA	28 Watts	6.00 Metres	Steel	
Y	23	STREET LIGHTING	PEAKS AVENUE	NEW WALTHAM	528669.46	405574.5	2013		54842	1 Urbis LED	Axia 16 LED 500mA	28 Watts	6.00 Metres	Steel	
Y	1	STREET LIGHTING	PEAKS LANE	NEW WALTHAM	528635.85	404821.81	1988		54856	1 Urbis LED	Teceo 48 LED 500mA	79 Watts	10.00 Metres	Galvanised Steel	
Y	2	STREET LIGHTING	PEAKS LANE	NEW WALTHAM	528659.9	404829.54	1988		54857	1 Urbis LED	Teceo 48 LED 500mA	79 Watts	10.00 Metres	Galvanised Steel	
Y	3	STREET LIGHTING	PEAKS LANE	NEW WALTHAM	528648.63	404863.96	1988		54858	1 Urbis LED	Teceo 40 LED 500mA	64 Watts	10.00 Metres	Galvanised Steel	
Y	4	STREET LIGHTING	PEAKS LANE	NEW WALTHAM	528642.94	404898.9	1988		54859	1 Urbis LED	Teceo 40 LED 500mA	64 Watts	10.00 Metres	Galvanised Steel	
Y	5	STREET LIGHTING	PEAKS LANE	NEW WALTHAM	528625.72	404929.34	1988		54860	1 Urbis LED	Teceo 40 LED 500mA	64 Watts	10.00 Metres	Galvanised Steel	
Y	6	STREET LIGHTING	PEAKS LANE	NEW WALTHAM	528618.76	404962.82	1988		54861	1 Urbis LED	Ampera 48 LED 700mA	104 Watts	10.00 Metres	Galvanised Steel	
Y	7	STREET LIGHTING	PEAKS LANE	NEW WALTHAM	528610.2	404989.92	2014	29/07/2014	62888	1 Urbis LED	Axia 16 LED 500mA	28 Watts	6.00 Metres	Galvanised Steel	
Y	8	STREET LIGHTING	PEAKS LANE	NEW WALTHAM	528616.01	404996.42	2020	06/02/2020	67793	Urbis	Ampera 48 LED 700mA	104 Watts	12.00 Metres	Galvanised Steel	
Y	9	STREET LIGHTING	PEAKS LANE	NEW WALTHAM	528602.22	405018.78	2014	29/07/2014	62889	1 Urbis LED	Axia 16 LED 500mA	28 Watts	6.00 Metres	Galvanised Steel	
Y	10	STREET LIGHTING	PEAKS LANE	NEW WALTHAM	528614.96	405023.38	1988		54863	1 Urbis LED	Ampera 48 LED 700mA	104 Watts	10.00 Metres	Galvanised Steel	
Y	11	STREET LIGHTING	PEAKS LANE	NEW WALTHAM	528600.2	405049.98	2014	29/07/2014	62890	1 Urbis LED	Axia 16 LED 500mA	28 Watts	6.00 Metres	Galvanised Steel	
Y	12	STREET LIGHTING	PEAKS LANE	NEW WALTHAM	528618.23	405052.73	1988		54864	1 Urbis LED	Ampera 48 LED 700mA	104 Watts	10.00 Metres	Galvanised Steel	
Y	13	STREET LIGHTING	PEAKS LANE	NEW WALTHAM	528586.02	405073.46	2014	29/07/2014	62891	1 Urbis LED	Axia 16 LED 500mA	28 Watts	6.00 Metres	Galvanised Steel	
Y	14	STREET LIGHTING	PEAKS LANE	NEW WALTHAM	528624.56	405081.84	2014		54865	1 Urbis LED	Ampera 48 LED 700mA	104 Watts	10.00 Metres	Galvanised Steel	
Y	15	STREET LIGHTING	PEAKS LANE	NEW WALTHAM	528587.29	405097.38	2001		54896	1 Urbis LED	Axia 16 LED 500mA	28 Watts	6.00 Metres	Galvanised Steel	
Y	16	STREET LIGHTING	PEAKS LANE	NEW WALTHAM	528625.64	405104.28	2001		54897	1 Urbis LED	Axia 16 LED 500mA	28 Watts	5.00 Metres	Galvanised Steel	
Y	17	STREET LIGHTING	PEAKS LANE	NEW WALTHAM	528646.69	405104.36	1988		54866	1 Urbis LED	Ampera 48 LED 700mA	104 Watts	10.00 Metres	Galvanised Steel	
Y	18	STREET LIGHTING	PEAKS LANE	NEW WALTHAM	528645.98	405137.52	1988		54867	1 Urbis LED	Ampera 48 LED 700mA	104 Watts	10.00 Metres	Galvanised Steel	
Y	19	STREET LIGHTING	PEAKS LANE	NEW WALTHAM	528668.87	405165.97	1988		54868	1 Urbis LED	Ampera 48 LED 700mA	104 Watts	10.00 Metres	Galvanised Steel	
Y	20	STREET LIGHTING	PEAKS LANE	NEW WALTHAM	528678.59	405197.26	1988		54869	1 Urbis LED	Ampera 48 LED 700mA	104 Watts	10.00 Metres	Galvanised Steel	
Y	21	STREET LIGHTING	PEAKS LANE	NEW WALTHAM	528684.46	405233.01	1988		54870	1 Urbis LED	Ampera 48 LED 700mA	104 Watts	10.00 Metres	Galvanised Steel	
Y	22	STREET LIGHTING	PEAKS LANE	NEW WALTHAM	528682.48	405273.18	1986		54871	1 Urbis LED	Ampera 48 LED 700mA	104 Watts	10.00 Metres	Galvanised Steel	
Y	23	STREET LIGHTING	PEAKS LANE	NEW WALTHAM	528669.07	405303.5	1986		54872	1 Urbis LED	Ampera 48 LED 700mA	104 Watts	10.00 Metres	Galvanised Steel	
Y	24	STREET LIGHTING	PEAKS LANE	NEW WALTHAM	528664.33	405344.25	1986		54873	1 Urbis LED	Ampera 48 LED 700mA	104 Watts	10.00 Metres	Galvanised Steel	
Y	25	STREET LIGHTING	PEAKS LANE	NEW WALTHAM	528665.75	405381.42	1986		54874	1 Urbis LED	Ampera 48 LED 700mA	104 Watts	10.00 Metres	Galvanised Steel	
Y	26	STREET LIGHTING	PEAKS LANE	NEW WALTHAM	528674.46	405423.44	1986		54875	1 Urbis LED	Ampera 48 LED 700mA	104 Watts	10.00 Metres	Galvanised Steel	
Y	27	STREET LIGHTING	PEAKS LANE	NEW WALTHAM	528678.31	405462.43	1986		54876	1 Urbis LED	Ampera 48 LED 700mA	104 Watts	10.00 Metres	Galvanised Steel	
Y	28	STREET LIGHTING	PEAKS LANE	NEW WALTHAM	528680.13	405502.38	1986		54877	1 Urbis LED	Ampera 48 LED 700mA	104 Watts	10.00 Metres	Galvanised Steel	
Y	29	STREET LIGHTING	PEAKS LANE	NEW WALTHAM	528681.75	405539.14	1986		54878	1 Urbis LED	Ampera 48 LED 700mA	104 Watts	10.00 Metres	Galvanised Steel	
Y	30	STREET LIGHTING	PEAKS LANE	NEW WALTHAM	528683.77	405580.15	1986		54879	1 Urbis LED	Ampera 48 LED 700mA	104 Watts	10.00 Metres	Galvanised Steel	
Y	31	STREET LIGHTING	PEAKS LANE	NEW WALTHAM	528684.99	405619.55	1986		54880	1 Urbis LED	Ampera 48 LED 700mA	104 Watts	10.00 Metres	Galvanised Steel	
Y	32	STREET LIGHTING	PEAKS LANE	NEW WALTHAM	528687.62	405661	1986		54881	1 Urbis LED	Ampera 48 LED 700mA	104 Watts	10.00 Metres	Galvanised Steel	
Y	33	STREET LIGHTING	PEAKS LANE	NEW WALTHAM	528688.63	405699.47	1986		54882	1 Urbis LED	Ampera 48 LED 700mA	104 Watts	10.00 Metres	Galvanised Steel	
Y	34	STREET LIGHTING	PEAKS LANE	NEW WALTHAM	528687.98	405735.12	2018	21/08/2018	54883	1 Urbis LED	Ampera 48 LED 700mA	104 Watts	10.00 Metres	Galvanised Steel	
Y	35	STREET LIGHTING	PEAKS LANE	NEW WALTHAM	528694.07	405775.08	2018	21/08/2018	54884	1 Urbis LED	Ampera 48 LED 700mA	104 Watts	10.00 Metres	Galvanised Steel	
Y	36	STREET LIGHTING	PEAKS LANE	NEW WALTHAM	528704.23	405816.73	2018	21/08/2018	54885	1 Urbis LED	Ampera 48 LED 700mA	104 Watts	10.00 Metres	Galvanised Steel	
Y	37	STREET LIGHTING	PEAKS LANE	NEW WALTHAM	528716.76	405853.31	2018	21/08/2018	54886	1 Urbis LED	Ampera 48 LED 700mA	104 Watts	10.00 Metres	Galvanised Steel	
Y	38	STREET LIGHTING	PEAKS LANE	NEW WALTHAM	528736.06	405891.91	2018	21/08/2018	54887	1 Urbis LED	Ampera 48 LED 700mA	104 Watts	10.00 Metres	Galvanised Steel	
Y	39	STREET LIGHTING	PEAKS LANE	NEW WALTHAM	528761.2	405911.59	1997		54888	1 Urbis LED	Teceo 48 LED 500mA	79 Watts	8.00 Metres	Galvanised Steel	
Y	40	STREET LIGHTING	PEAKS LANE	NEW WALTHAM	528775.38	405936.97	1997		54889	1 Urbis LED	Teceo 48 LED 500mA	79 Watts	10.00 Metres	Galvanised Steel	
Y	41	STREET LIGHTING	PEAKS LANE	NEW WALTHAM	528760.44	405938.24	1997		54890	1 Urbis LED	Teceo 48 LED 500mA	79 Watts	10.00 Metres	Galvanised Steel	
Y	41	STREET LIGHTING	PEAKS LANE	NEW WALTHAM	528760.44	405938.24	1997		63016	1 Urbis LED	Teceo 48 LED 500mA	79 Watts	10.00 Metres	Galvanised Steel	
Y	42	STREET LIGHTING	PEAKS LANE	NEW WALTHAM	528794.09	405961.13	1997		54891	1 Urbis LED	Teceo 48 LED 500mA	79 Watts	10.00 Metres	Galvanised Steel	
Y	1	STREET LIGHTING	PICCADILLY	NEW WALTHAM	528299.35	404924.6	2007		55437	Urbis	Axia 16 LED 350mA	19 Watts	5.00 Metres	Steel	
Y	2	STREET LIGHTING	PICCADILLY	NEW WALTHAM	528276.56	404918.78	1991		55438	Urbis	Axia 16 LED 350mA	19 Watts	5.00 Metres	Galvanised Steel	
Y	1	STREET LIGHTING	PRIORS CLOSE	NEW WALTHAM	528654.5	404332.52	1996		55664	1 Urbis LED	Axia 16 LED 500mA	28 Watts	5.00 Metres	Galvanised Steel	
Y	2	STREET LIGHTING	PRIORS CLOSE	NEW WALTHAM	528699.31	404346.89	2014	30/06/2014	62899	1 Urbis LED	Axia 16 LED 500mA	28 Watts	6.00 Metres	Galvanised Steel	

Y	3	STREET LIGHTING	PRIORS CLOSE	NEW WALTHAM	528738.17	404348.6	2014	30/06/2014	62900	1 Urbis LED	Axia 16 LED 500mA	28 Watts	6.00 Metres	Galvanised Steel	
Y	4	STREET LIGHTING	PRIORS CLOSE	NEW WALTHAM	528774.21	404358.66	2006		55667	1 Urbis LED	Axia 16 LED 500mA	28 Watts	6.00 Metres	Stainless Steel	
Y	5	STREET LIGHTING	PRIORS CLOSE	NEW WALTHAM	528812.22	404383.79	1996		55668	1 Urbis LED	Axia 16 LED 500mA	28 Watts	6.00 Metres	Galvanised Steel	
Y	6	STREET LIGHTING	PRIORS CLOSE	NEW WALTHAM	528836.27	404381.32	1996		55669	1 Urbis LED	Axia 16 LED 500mA	28 Watts	6.00 Metres	Galvanised Steel	
Y	7	STREET LIGHTING	PRIORS CLOSE	NEW WALTHAM	528830.7	404394.1	1996		55670	1 Urbis LED	Axia 16 LED 500mA	28 Watts	6.00 Metres	Galvanised Steel	
Y	8	STREET LIGHTING	PRIORS CLOSE	NEW WALTHAM	528829.69	404420.5	1996		55671	1 Urbis LED	Axia 16 LED 500mA	28 Watts	6.00 Metres	Galvanised Steel	
Y	9	STREET LIGHTING	PRIORS CLOSE	NEW WALTHAM	528813.87	404442.84	1996		55672	1 Urbis LED	Axia 16 LED 500mA	28 Watts	6.00 Metres	Galvanised Steel	
Y	10	STREET LIGHTING	PRIORS CLOSE	NEW WALTHAM	528813.37	404469.17	1996		55673	1 Urbis LED	Axia 16 LED 500mA	28 Watts	6.00 Metres	Galvanised Steel	
Y	11	STREET LIGHTING	PRIORS CLOSE	NEW WALTHAM	528827.03	404462.14	2009		55674	1 Urbis LED	Axia 16 LED 500mA	28 Watts	6.00 Metres	Steel	
Y	12	STREET LIGHTING	PRIORS CLOSE	NEW WALTHAM	528857.98	404462.56	2009		55675	1 Urbis LED	Axia 16 LED 500mA	28 Watts	6.00 Metres	Steel	
Y	13	STREET LIGHTING	PRIORS CLOSE	NEW WALTHAM	528850.5	404396.3	2009		55676	1 Urbis LED	Axia 16 LED 500mA	28 Watts	6.00 Metres	Steel	
Y	14	STREET LIGHTING	PRIORS CLOSE	NEW WALTHAM	528868.91	404402.67	2009		55677	1 Urbis LED	Axia 16 LED 500mA	28 Watts	6.00 Metres	Steel	
Y	15	STREET LIGHTING	PRIORS CLOSE	NEW WALTHAM	528871.61	404374.56	2009		55678	1 Urbis LED	Axia 16 LED 500mA	28 Watts	6.00 Metres	Steel	
Y	16	STREET LIGHTING	PRIORS CLOSE	NEW WALTHAM	528890.79	404351.23	2009		55679	1 Urbis LED	Axia 16 LED 500mA	28 Watts	6.00 Metres	Steel	
Y	1	STREET LIGHTING	RUTLAND DRIVE	NEW WALTHAM	528149.91	404453.93	1986		56420	1 Urbis LED	Axia 16 LED 500mA	28 Watts	5.00 Metres	Galvanised Steel	
Y	2	STREET LIGHTING	RUTLAND DRIVE	NEW WALTHAM	528175.36	404475.26	2014	30/06/2014	62901	1 Urbis LED	Axia 16 LED 500mA	28 Watts	6.00 Metres	Galvanised Steel	
Y	3	STREET LIGHTING	RUTLAND DRIVE	NEW WALTHAM	528213.08	404488.23	2014	30/06/2014	62902	1 Urbis LED	Axia 16 LED 500mA	28 Watts	6.00 Metres	Galvanised Steel	
Y	4	STREET LIGHTING	RUTLAND DRIVE	NEW WALTHAM	528248.14	404491.97	2014	30/06/2014	62903	1 Urbis LED	Axia 16 LED 500mA	28 Watts	6.00 Metres	Galvanised Steel	
Y	1	STREET LIGHTING	SAVOY COURT	NEW WALTHAM	528339.83	404888.08	1988		56613	Urbis	Axia 16 LED 350mA	19 Watts	5.00 Metres	Galvanised Steel	
Y	2	STREET LIGHTING	SAVOY COURT	NEW WALTHAM	528367.42	404891.75	1988		56614	Urbis	Axia 16 LED 350mA	19 Watts	5.00 Metres	Galvanised Steel	
Y	3	STREET LIGHTING	SAVOY COURT	NEW WALTHAM	528393.24	404893.71	2013		56615	Urbis	Axia 16 LED 350mA	19 Watts	6.00 Metres	Galvanised Steel	
Y	4	STREET LIGHTING	SAVOY COURT	NEW WALTHAM	528395.9	404911.62	1988		56616	Urbis	Axia 16 LED 350mA	19 Watts	5.00 Metres	Galvanised Steel	
Y	5	STREET LIGHTING	SAVOY COURT	NEW WALTHAM	528384.51	404925.74	1988		56617	Urbis	Axia 16 LED 350mA	19 Watts	5.00 Metres	Galvanised Steel	
Y	1	STREET LIGHTING	STATION AVENUE	NEW WALTHAM	528528.68	404754.24	2011		58161	Urbis	Axia 16 LED 350mA	19 Watts	6.00 Metres	Steel	
Y	2	STREET LIGHTING	STATION AVENUE	NEW WALTHAM	528533.36	404736.98	2011		58162	Urbis	Axia 16 LED 350mA	19 Watts	6.00 Metres	Steel	
Y	3	STREET LIGHTING	STATION AVENUE	NEW WALTHAM	528542.12	404706.93	2011		58163	Urbis	Axia 16 LED 350mA	19 Watts	6.00 Metres	Steel	
Y	4	STREET LIGHTING	STATION AVENUE	NEW WALTHAM	528550.49	404677.21	2011		58164	Urbis	Axia 16 LED 350mA	19 Watts	6.00 Metres	Steel	
Y	5	STREET LIGHTING	STATION AVENUE	NEW WALTHAM	528551.3	404647.49	2011		58165	Urbis	Axia 16 LED 350mA	19 Watts	6.00 Metres	Steel	
Y	6	STREET LIGHTING	STATION AVENUE	NEW WALTHAM	528566.45	404621.13	2011		58166	Urbis	Axia 16 LED 350mA	19 Watts	6.00 Metres	Steel	
Y	7	STREET LIGHTING	STATION AVENUE	NEW WALTHAM	528577.12	404585.35	2011		58167	Urbis	Axia 16 LED 350mA	19 Watts	6.00 Metres	Steel	
Y	8	STREET LIGHTING	STATION AVENUE	NEW WALTHAM	528577.57	404555.34	2011		58168	Urbis	Axia 16 LED 350mA	19 Watts	6.00 Metres	Steel	
Y	9	STREET LIGHTING	STATION AVENUE	NEW WALTHAM	528594.63	404521.58	2011		58169	Urbis	Axia 16 LED 350mA	19 Watts	6.00 Metres	Steel	
Y	10	STREET LIGHTING	STATION AVENUE	NEW WALTHAM	528597.38	404483.09	2011		58170	Urbis	Axia 16 LED 350mA	19 Watts	6.00 Metres	Steel	
Y	11	STREET LIGHTING	STATION AVENUE	NEW WALTHAM	528612	404456.9	2011		58171	Urbis	Axia 16 LED 350mA	19 Watts	6.00 Metres	Steel	
Y	12	STREET LIGHTING	STATION AVENUE	NEW WALTHAM	528621.15	404423.62	2011		58172	Urbis	Axia 16 LED 350mA	19 Watts	6.00 Metres	Steel	
Y	1	STREET LIGHTING	TAMAR DRIVE	NEW WALTHAM	528895.64	405369.24	1991		58741	Urbis	Axia 16 LED 350mA	19 Watts	5.00 Metres	Galvanised Steel	
Y	2	STREET LIGHTING	TAMAR DRIVE	NEW WALTHAM	528886.78	405340.57	1991		58742	Urbis	Axia 16 LED 350mA	19 Watts	5.00 Metres	Galvanised Steel	
Y	3	STREET LIGHTING	TAMAR DRIVE	NEW WALTHAM	528901.21	405316.27	1991		58743	Urbis	Axia 16 LED 350mA	19 Watts	5.00 Metres	Galvanised Steel	
Y	4	STREET LIGHTING	TAMAR DRIVE	NEW WALTHAM	528907.03	405296.96	1991		58744	Urbis	Axia 16 LED 350mA	19 Watts	5.00 Metres	Galvanised Steel	
Y	1	STREET LIGHTING	THE ORCHARD	NEW WALTHAM	528185.91	404705.9	2014	30/06/2014	62904	Urbis	Axia 16 LED 350mA	19 Watts	6.00 Metres	Galvanised Steel	
Y	2	STREET LIGHTING	THE ORCHARD	NEW WALTHAM	528169.58	404748.8	2014	30/06/2014	62905	Urbis	Axia 16 LED 350mA	19 Watts	6.00 Metres	Galvanised Steel	
Y	1	STREET LIGHTING	TOLL BAR AVENUE	NEW WALTHAM	527849.53	404585.54	2014		62906	1 Urbis LED	Axia 16 LED 500mA	28 Watts	6.00 Metres	Galvanised Steel	
Y	2	STREET LIGHTING	TOLL BAR AVENUE	NEW WALTHAM	527826.74	404631.39	2014		62907	1 Urbis LED	Axia 16 LED 500mA	28 Watts	6.00 Metres	Galvanised Steel	
Y	3	STREET LIGHTING	TOLL BAR AVENUE	NEW WALTHAM	527819.4	404679.87	2014		62908	1 Urbis LED	Axia 16 LED 500mA	28 Watts	6.00 Metres	Galvanised Steel	
Y	4	STREET LIGHTING	TOLL BAR AVENUE	NEW WALTHAM	527800.04	404728.79	2014		62909	1 Urbis LED	Axia 16 LED 500mA	28 Watts	6.00 Metres	Galvanised Steel	
Y	1	STREET LIGHTING	TRAFALGAR PARK	NEW WALTHAM	528685.9	405328.05	1987		59396	Urbis	Axia 16 LED 350mA	19 Watts	5.00 Metres	Galvanised Steel	
Y	2	STREET LIGHTING	TRAFALGAR PARK	NEW WALTHAM	528714	405324.06	1988		59397	Urbis	Axia 16 LED 350mA	19 Watts	5.00 Metres	Galvanised Steel	
Y	3	STREET LIGHTING	TRAFALGAR PARK	NEW WALTHAM	528740.15	405331.51	1987		59398	Urbis	Axia 16 LED 350mA	19 Watts	5.00 Metres	Galvanised Steel	
Y	4	STREET LIGHTING	TRAFALGAR PARK	NEW WALTHAM	528761.41	405350.09	1988		59399	Urbis	Axia 16 LED 350mA	19 Watts	5.00 Metres	Galvanised Steel	
Y	5	STREET LIGHTING	TRAFALGAR PARK	NEW WALTHAM	528774.7	405374.46	1989		59400	Urbis	Axia 16 LED 350mA	19 Watts	5.00 Metres	Galvanised Steel	
Y	6	STREET LIGHTING	TRAFALGAR PARK	NEW WALTHAM	528797.86	405394.01	1989		59401	Urbis	Axia 16 LED 350mA	19 Watts	5.00 Metres	Galvanised Steel	
Y	7	STREET LIGHTING	TRAFALGAR PARK	NEW WALTHAM	528831.15	405404.01	1989		59402	Urbis	Axia 16 LED 350mA	19 Watts	5.00 Metres	Galvanised Steel	
Y	8	STREET LIGHTING	TRAFALGAR PARK	NEW WALTHAM	528855.46	405406.48	1989		59403	Urbis	Axia 16 LED 350mA	19 Watts	5.00 Metres	Galvanised Steel	
Y	9	STREET LIGHTING	TRAFALGAR PARK	NEW WALTHAM	528883.56	405399.89	1989		59404	Urbis	Axia 16 LED 350mA	19 Watts	5.00 Metres	Galvanised Steel	
Y	10	STREET LIGHTING	TRAFALGAR PARK	NEW WALTHAM	528905.45	405387.17	1994		59405	Urbis	Axia 16 LED 350mA	19 Watts	5.00 Metres	Galvanised Steel	
Y	11	STREET LIGHTING	TRAFALGAR PARK	NEW WALTHAM	528925.33	405372.8	1995		59406	Urbis	Axia 16 LED 350mA	19 Watts	5.00 Metres	Galvanised Steel	
Y	12	STREET LIGHTING	TRAFALGAR PARK	NEW WALTHAM	528951.53	405384.51	1995		59407	Urbis	Axia 16 LED 350mA	19 Watts	5.00 Metres	Galvanised Steel	
Y	13	STREET LIGHTING	TRAFALGAR PARK	NEW WALTHAM	528978.87	405377.49	1995		59408	Urbis	Axia 16 LED 350mA	19 Watts	5.00 Metres	Galvanised Steel	
Y	14	STREET LIGHTING	TRAFALGAR PARK	NEW WALTHAM	529011.9	405373.12	1995		59409	Urbis	Axia 16 LED 350mA	19 Watts	5.00 Metres	Galvanised Steel	
Y	15	STREET LIGHTING	TRAFALGAR PARK	NEW WALTHAM	529021.52	405342.04	1995		59410	Urbis	Axia 16 LED 350mA	19 Watts	5.00 Metres	Galvanised Steel	
Y	16	STREET LIGHTING	TRAFALGAR PARK	NEW WALTHAM	529034.69	405315.9	1995		59411	Urbis	Axia 16 LED 350mA	19 Watts	5.00 Metres	Galvanised Steel	
Y	1	STREET LIGHTING	WADDINGHAM PLACE	NEW WALTHAM	528743.11	404421.71	1998		59672	Urbis	Axia 16 LED 350mA	19 Watts	5.00 Metres	Galvanised Steel	
Y	2	STREET LIGHTING	WADDINGHAM PLACE	NEW WALTHAM	528714.75	404411.77	1998		59673	Urbis	Axia 16 LED 350mA	19 Watts	5.00 Metres	Galvanised Steel	
Y	3	STREET LIGHTING	WADDINGHAM PLACE	NEW WALTHAM	528685.77	404410.44	1998		59674	Urbis	Axia 16 LED 350mA	19 Watts	5.00 Metres	Galvanised Steel	
Y	1	STREET LIGHTING	WEELSBY VIEW	NEW WALTHAM	528753.57	405704.73	2014	29/07/2014	62916	Urbis	Axia 16 LED 350mA	19 Watts	6.00 Metres	Galvanised Steel	
Y	2	STREET LIGHTING	WEELSBY VIEW	NEW WALTHAM	528806.23	405702.83	2002		60082	Urbis	Axia 16 LED 350mA	19 Watts	6.00 Metres	Stainless Steel	
Y	1	STREET LIGHTING	WHIMBREL WAY	NEW WALTHAM	528804.87	405373.82	1989		60638	Urbis	Axia 16 LED 350mA	19 Watts	5.00 Metres	Galvanised Steel	
Y	2	STREET LIGHTING	WHIMBREL WAY	NEW WALTHAM	528822.21	405352.37	1989		60639	Urbis	Axia 16 LED 350mA	19 Watts	5.00 Metres	Galvanised Steel	
Y	3	STREET LIGHTING	WHIMBREL WAY	NEW WALTHAM	528841.33	405326.48	1989		60640	Urbis	Axia 16 LED 350mA	19 Watts	5.00 Metres	Galvanised Steel	
Y	4	STREET LIGHTING	WHIMBREL WAY	NEW WALTHAM	528849.05	405302.5	1989		60641	Urbis	Axia 16 LED 350mA	19 Watts	5.00 Metres	Galvanised Steel	
Y	5	STREET LIGHTING	WHIMBREL WAY	NEW WALTHAM	528853.35	405274.97	1989		60642	Urbis	Axia 16 LED 350mA	19 Watts	5.00 Metres	Galvanised Steel	
Y	1	STREET LIGHTING	CHARLES AVENUE	NEW WALTHAM	528344.68	404622.28	2003		45650	1 Urbis LED	Axia 16 LED 500mA	28 Watts	6.00 Metres	Stainless Steel	
Y	2	STREET LIGHTING	CHARLES AVENUE	NEW WALTHAM	528312.3	404609.13	2003		45651	1 Urbis LED	Axia 16 LED 500mA	28 Watts	6.00 Metres	Stainless Steel	
Y	3	STREET LIGHTING	CHARLES AVENUE	NEW WALTHAM	528285.2	404592.8	2003		45652	1 Urbis LED	Axia 16 LED 500mA	28 Watts	6.00 Metres	Stainless Steel	
Y	4	STREET LIGHTING	CHARLES AVENUE	NEW WALTHAM	528282.48	404572.68	2003		45653	1 Urbis LED	Axia 16 LED 500mA	28 Watts	6.00 Metres	Stainless Steel	
Y	5	STREET LIGHTING	CHARLES AVENUE	NEW WALTHAM	528314.92	404541.2	2003		45654	1 Urbis LED	Axia 16 LED 500mA	28 Watts	6.00 Metres	Stainless Steel	
Y	6	STREET LIGHTING	CHARLES AVENUE	NEW WALTHAM	528318.6	404524.6	2003		45655	1 Urbis LED	Axia 16 LED 500mA	28 Watts	6.00 Metres	Stainless Steel	
Y	7	STREET LIGHTING	CHARLES AVENUE	NEW WALTHAM	528285.92	404542.68	2003		45656	1 Urbis LED	Axia 16 LED 500mA	28 Watts	6.00 Metres	Stainless Steel	
Y	8	STREET LIGHTING	CHARLES AVENUE	NEW WALTHAM	528297.68	404508	2003		45657	1 Urbis LED	Axia 16 LED 500mA	28 Watts	6.00 Metres	Stainless Steel	
Y	9	STREET LIGHTING	CHARLES AVENUE	NEW WALTHAM	528313.07	404473.12	2003		45658	1 Urbis LED	Axia 16 LED 500mA	28 Watts	6.00 Metres	Stainless Steel	
Y	1	STREET LIGHTING	DRURY LANE	NEW WALTHAM	528267.92	404972.89	1989		47561	Urbis	Axia 16 LED 350mA	19 Watts	5.00 Metres	Galvanised Steel	
Y	2	STREET LIGHTING	DRURY LANE	NEW WALTHAM	528244.25	404964.73	1988		47562	Urbis	Axia 16 LED 350mA	19 Watts	5.00 Metres	Galvanised Steel	
Y	3	STREET LIGHTING	DRURY LANE	NEW WALTHAM	528217.92	404956.18	1989		47563	Urbis	Axia 16 LED 350mA	19 Watts	5.00 Metres	Galvanised Steel	
Y	4	STREET LIGHTING	DRURY LANE	NEW WALTHAM	528198.8	404932.2	1989		47564	Urbis	Axia 16 LED 350mA	19 Watts	5.00 Metres	Galvanised Steel	
Y	5	STREET LIGHTING	DRURY LANE	NEW WALTHAM	528180.59	404933.67	1990		47565	Urbis	Axia 16 LED 350mA	19 Watts	5.00 Metres	Galvanised Steel	
Y	6	STREET LIGHTING	DRURY LANE	NEW WALTHAM	528175.94	404925.7	1989		47566	Urbis	Axia 16 LED 350mA	19 Watts	5.00 Metres	Galvanised Steel	
Y	7	STREET LIGHTING	DRURY LANE	NEW WALTHAM	528145.15	404924.94	1989		47567	Urbis	Axia 16 LED 350mA	19 Watts	5.00 Metres	Galvanised Steel	
Y	8	STREET LIGHTING	DRURY LANE	NEW WALTHAM	528124.14	404906.27	1989		47568	Urbis	Axia 16 LED 350mA	19 Watts	5.00 Metres	Galvanised Steel	
Y	9	STREET LIGHTING	DRURY LANE	NEW WALTHAM	528093.02	404903.57	1989		47569	Urbis	Axia 16 LED 350mA	19 Watts	5.00 Metres	Galvanised Steel	
Y	1	STREET LIGHTING	ENFIELD AVENUE	NEW WALTHAM	528635	404785.83	1998		48030	Urbis	Axia 16 LED 350mA	19 Watts	6.00 Metres	Aluminium	
Y	2	STREET LIGHTING	ENFIELD AVENUE	NEW WALTHAM	528647.65	404750.9	1998		48031	Urbis	Axia 16 LED 350mA	19 Watts	6.00 Metres	Aluminium	
Y	3	STREET LIGHTING	ENFIELD AVENUE	NEW WALTHAM	528656.26	404725.96	1998		48032	Urbis	Axia 16 LED 350mA	19 Watts	6.00 Metres	Aluminium	
Y	4	STREET LIGHTING	ENFIELD AVENUE	NEW WALTHAM	528668.29	404692.67	1998		48033	Urbis	Axia 16 LED 350mA	19 Watts	6.00 Metres	Aluminium	
Y	5	STREET LIGHTING	ENFIELD AVENUE	NEW WALTHAM	528679.55	404661.84	1998		48034	Urbis	Axia 16 LED 350mA	19 Watts	6.00 Metres	Aluminium	
Y	6	STREET LIGHTING	ENFIELD AVENUE	NEW WALTHAM	528690.18	404630.07	1998		48035	Urbis	Axia 16 LED 350mA	19 Watts	6.00 Metres	Aluminium	
Y	7	STREET LIGHTING	ENFIELD AVENUE	NEW WALTHAM	528700.82	404600.14	1998		48036	Urbis	Axia 16 LED 350mA	19 Watts	6.00 Metres	Aluminium	
Y	8	STREET LIGHTING	ENFIELD AVENUE	NEW WALTHAM	528703.04	404564.97	1998		48037	Urbis	Axia 16 LED 350mA	19 Watts	6.00 Metres	Aluminium	
Y	9	STREET LIGHTING	ENFIELD AVENUE	NEW WALTHAM	528712.03	404543.9	1998		48038	Urbis	Axia 16 LED 350mA	19 Watts	6.00 Metres	Aluminium	
Y	10	STREET LIGHTING	ENFIELD AVENUE	NEW WALTHAM	528726.21	404524.21	1998		48039	Urbis	Axia 16 LED 350mA	19 Watts	6.00 Metres	Aluminium	
Y	11	STREET LIGHTING	ENFIELD AVENUE	NEW WALTHAM	528738.36	404490.35	1998		48040	Urbis	Axia 16 LED 350mA	19 Watts	6.00 Metres	Aluminium	
Y	12	STREET LIGHTING	ENFIELD AVENUE	NEW WALTHAM	528760.71	404476.77	2014		62858	1 Urbis LED	Axia 16 LED 500mA	28 Watts	6.00 Metres	Galvanised Steel	
Y	13	STREET LIGHTING	ENFIELD AVENUE	NEW WALTHAM	528792.99	404488.09	2014		62859	1 Urbis LED	Axia 16 LED 500mA	28 Watts	6.00 Metres	Galvanised Steel	
Y	14	STREET LIGHTING	ENFIELD AVENUE	NEW WALTHAM	528741.72	404461.68	1998		48041	Urbis	Axia 16 LED 350mA	19 Watts	6.00 Metres	Aluminium	
Y	15	STREET LIGHTING	ENFIELD AVENUE	NEW WALTHAM	528759.19	404431.62	1998		48042	Urbis	Axia 16 LED 350mA	19 Watts	6.00 Metres	Aluminium	
Y	16	STREET LIGHTING	ENFIELD AVENUE	NEW WALTHAM	528761.09	404405.92	1998		48043	Urbis	Axia 16 LED 350mA	19 Watts	6.00 Metres	Aluminium	
Y	17	STREET LIGHTING	ENFIELD AVENUE	NEW WALTHAM	528771.6	404376.87	1998		48044	Urbis	Axia 16 LED 350mA	19 Watts	6.00 Metres	Aluminium	
Y	1	STREET LIGHTING	GREENLANDS AVENUE	NEW WALTHAM	528365.1	404726.4	2003		49739	Urbis	Axia 16 LED 350mA	19 Watts	6.00 Metres	Stainless Steel	
Y	2	STREET LIGHTING	GREENLANDS AVENUE	NEW WALTHAM	528351.97	404758.08	1988		49740	Urbis	Axia 16 LED 350mA	19 Watts	5.00 Metres	Galvanised Steel	
Y	3	STREET LIGHTING	GREENLANDS AVENUE	NEW WALTHAM	528355.61	404780.8	2017	23/03/2017	68553	Urbis	Axia 16 LED 350mA	19 Watts	6.00 Metres	Galvanised Steel	
Y	4	STREET LIGHTING	GREENLANDS AVENUE	NEW WALTHAM	528336.28	404805.99	1988		49742	Urbis	Axia 16 LED 350mA	19 Watts	5.00 Metres	Galvanised Steel	

Y	5	STREET LIGHTING	GREENLANDS AVENUE	NEW WALTHAM	528334.63	404837.13	1988		49743	Urbis	Axia 16 LED 350mA	19 Watts	5.00 Metres	Galvanised Steel	
Y	6	STREET LIGHTING	GREENLANDS AVENUE	NEW WALTHAM	528324.89	404864.91	1988		49744	Urbis	Axia 16 LED 350mA	19 Watts	5.00 Metres	Galvanised Steel	
Y	7	STREET LIGHTING	GREENLANDS AVENUE	NEW WALTHAM	528319.95	404889.15	1988		49745	Urbis	Axia 16 LED 350mA	19 Watts	5.00 Metres	Galvanised Steel	
Y	8	STREET LIGHTING	GREENLANDS AVENUE	NEW WALTHAM	528319.47	404919.09	1988		49746	Urbis	Axia 16 LED 350mA	19 Watts	5.00 Metres	Galvanised Steel	
Y	9	STREET LIGHTING	GREENLANDS AVENUE	NEW WALTHAM	528302.38	404939.66	1988		49747	Urbis	Axia 16 LED 350mA	19 Watts	5.00 Metres	Galvanised Steel	
Y	10	STREET LIGHTING	GREENLANDS AVENUE	NEW WALTHAM	528302.56	404968.82	1988		49748	Urbis	Axia 16 LED 350mA	19 Watts	5.00 Metres	Galvanised Steel	
Y	1	STREET LIGHTING	JANTON COURT	NEW WALTHAM	528463.32	405260.87	2014	29/07/2014	62871	1 Urbis LED	Axia 16 LED 500mA	28 Watts	6.00 Metres	Galvanised Steel	
Y	2	STREET LIGHTING	JANTON COURT	NEW WALTHAM	528419.78	405244.48	2014	29/07/2014	62872	1 Urbis LED	Axia 16 LED 500mA	28 Watts	6.00 Metres	Galvanised Steel	
Y	3	STREET LIGHTING	JANTON COURT	NEW WALTHAM	528388.39	405201.25	2014	29/07/2014	62873	1 Urbis LED	Axia 16 LED 500mA	28 Watts	6.00 Metres	Galvanised Steel	
Y	4	STREET LIGHTING	JANTON COURT	NEW WALTHAM	528376.49	405243.15	2014	29/07/2014	62874	1 Urbis LED	Axia 16 LED 500mA	28 Watts	6.00 Metres	Galvanised Steel	
Y	5	STREET LIGHTING	JANTON COURT	NEW WALTHAM	528372.19	405291.89	2014	29/07/2014	62875	1 Urbis LED	Axia 16 LED 500mA	28 Watts	6.00 Metres	Galvanised Steel	
Y	1	STREET LIGHTING	LOUTH ROAD	NEW WALTHAM	527267.03	405195.77	1975		52840	1 Urbis LED	Teceo 48 LED 700mA	104 Watts	10.00 Metres	Galvanised Steel	
Y	2	STREET LIGHTING	LOUTH ROAD	NEW WALTHAM	527290.83	405181.22	1975		52841	1 Urbis LED	Teceo 48 LED 700mA	104 Watts	10.00 Metres	Galvanised Steel	
Y	3	STREET LIGHTING	LOUTH ROAD	NEW WALTHAM	527294.48	405152.97	1975		52842	1 Urbis LED	Teceo 48 LED 700mA	104 Watts	10.00 Metres	Galvanised Steel	
Y	4	STREET LIGHTING	LOUTH ROAD	NEW WALTHAM	527311.74	405144.27	1975		52843	1 Urbis LED	Teceo 48 LED 700mA	104 Watts	5.00 Metres	Galvanised Steel	
Y	5	STREET LIGHTING	LOUTH ROAD	NEW WALTHAM	527317.44	405116.2	2008		52844	1 Urbis LED	Teceo 48 LED 700mA	104 Watts	10.00 Metres	Steel	
Y	6	STREET LIGHTING	LOUTH ROAD	NEW WALTHAM	527347.21	405084.66	1975		52845	1 Urbis LED	Teceo 48 LED 700mA	104 Watts	10.00 Metres	Galvanised Steel	
Y	7	STREET LIGHTING	LOUTH ROAD	NEW WALTHAM	527361.38	405044.42	1975		52846	1 Urbis LED	Teceo 48 LED 700mA	104 Watts	10.00 Metres	Galvanised Steel	
Y	8	STREET LIGHTING	LOUTH ROAD	NEW WALTHAM	527389.84	405020.75	1997		52847	1 Urbis LED	Teceo 48 LED 700mA	104 Watts	10.00 Metres	Galvanised Steel	
Y	9	STREET LIGHTING	LOUTH ROAD	NEW WALTHAM	527405.1	404985.34	1997		52848	1 Urbis LED	Teceo 48 LED 700mA	104 Watts	10.00 Metres	Galvanised Steel	
Y	10	STREET LIGHTING	LOUTH ROAD	NEW WALTHAM	527436.7	404967.29	1997		52849	1 Urbis LED	Teceo 48 LED 700mA	104 Watts	10.00 Metres	Galvanised Steel	
Y	11	STREET LIGHTING	LOUTH ROAD	NEW WALTHAM	527460.63	404933.14	1997		52850	1 Urbis LED	Teceo 48 LED 700mA	104 Watts	10.00 Metres	Galvanised Steel	
Y	12	STREET LIGHTING	LOUTH ROAD	NEW WALTHAM	527489.84	404927.25	1997		52851	1 Urbis LED	Teceo 48 LED 700mA	104 Watts	10.00 Metres	Galvanised Steel	
Y	13	STREET LIGHTING	LOUTH ROAD	NEW WALTHAM	527513.94	404898.39	1997		52852	1 Urbis LED	Teceo 48 LED 700mA	104 Watts	10.00 Metres	Galvanised Steel	
Y	14	STREET LIGHTING	LOUTH ROAD	NEW WALTHAM	527554.25	404896.67	1997		52853	1 Urbis LED	Teceo 48 LED 700mA	104 Watts	10.00 Metres	Galvanised Steel	
Y	15	STREET LIGHTING	LOUTH ROAD	NEW WALTHAM	527546.75	404877.63	1997		52854	1 Urbis LED	Teceo 48 LED 700mA	104 Watts	10.00 Metres	Galvanised Steel	
Y	16	STREET LIGHTING	LOUTH ROAD	NEW WALTHAM	527579.29	404843.06	1997		52855	1 Urbis LED	Teceo 48 LED 700mA	104 Watts	10.00 Metres	Galvanised Steel	
Y	17	STREET LIGHTING	LOUTH ROAD	NEW WALTHAM	527601.69	404842.3	2017	21/11/2017	52856	1 Urbis LED	Teceo 48 LED 700mA	104 Watts	10.00 Metres	Galvanised Steel	
Y	18	STREET LIGHTING	LOUTH ROAD	NEW WALTHAM	527580.43	404816.03	1997		52857	1 Urbis LED	Teceo 48 LED 700mA	104 Watts	10.00 Metres	Galvanised Steel	
Y	19	STREET LIGHTING	LOUTH ROAD	NEW WALTHAM	527591.69	404792.93	2018	11/06/2018	52858	1 Urbis LED	Teceo 48 LED 700mA	104 Watts	10.00 Metres	Galvanised Steel	
Y	20	STREET LIGHTING	LOUTH ROAD	NEW WALTHAM	527575.14	404761.37	1997		52859	1 Urbis LED	Teceo 48 LED 700mA	104 Watts	10.00 Metres	Galvanised Steel	
Y	21	STREET LIGHTING	LOUTH ROAD	NEW WALTHAM	527588.5	404733.16	2018	11/06/2018	52860	1 Urbis LED	Teceo 48 LED 700mA	104 Watts	10.00 Metres	Galvanised Steel	
Y	22	STREET LIGHTING	LOUTH ROAD	NEW WALTHAM	527578.78	404702.03	1997		52861	1 Urbis LED	Teceo 48 LED 700mA	104 Watts	10.00 Metres	Galvanised Steel	
Y	23	STREET LIGHTING	LOUTH ROAD	NEW WALTHAM	527601.32	404678.3	1997		52862	1 Urbis LED	Teceo 48 LED 700mA	104 Watts	10.00 Metres	Galvanised Steel	
Y	24	STREET LIGHTING	LOUTH ROAD	NEW WALTHAM	527599.54	404643.78	2022	01/04/2022	69660	Urbis	AMPERA 48 LED 800mA	113 Watts	10.00 Metres	Galvanised Steel	
Y	25	STREET LIGHTING	LOUTH ROAD	NEW WALTHAM	527613.59	404621.19	2022	01/04/2022	69661	Urbis	AMPERA 48 LED 800mA	113 Watts	10.00 Metres	Galvanised Steel	
Y	26	STREET LIGHTING	LOUTH ROAD	NEW WALTHAM	527627.83	404598.03	2022	01/04/2022	69662	Urbis	AMPERA 48 LED 800mA	113 Watts	10.00 Metres	Galvanised Steel	
Y	27	STREET LIGHTING	LOUTH ROAD	NEW WALTHAM	527643.78	404572.21	2022	01/04/2022	69663	Urbis	AMPERA 48 LED 800mA	113 Watts	10.00 Metres	Galvanised Steel	
Y	28	STREET LIGHTING	LOUTH ROAD	NEW WALTHAM	527660.93	404546.64	2022	01/04/2022	69674	Urbis	Teceo 48 LED 700mA	104 Watts	10.00 Metres	Galvanised Steel	
Y	29	STREET LIGHTING	LOUTH ROAD	NEW WALTHAM	527689.14	404529.67	1990		52868	1 Urbis LED	Teceo 48 LED 700mA	104 Watts	10.00 Metres	Galvanised Steel	
Y	30	STREET LIGHTING	LOUTH ROAD	NEW WALTHAM	527717.83	404441.01	2022	01/04/2022	69664	Urbis	Ampera Maxi 80 LED 700m	163 Watts	10.00 Metres	Galvanised Steel	
Y	31	STREET LIGHTING	LOUTH ROAD	NEW WALTHAM	527744.04	404432.84	2022	01/04/2022	69665	Urbis	Ampera Maxi 80 LED 700m	163 Watts	10.00 Metres	Galvanised Steel	
Y	32	STREET LIGHTING	LOUTH ROAD	NEW WALTHAM	527736.82	404406.06	2022	01/04/2022	69666	Urbis	Ampera Maxi 80 LED 700m	163 Watts	10.00 Metres	Galvanised Steel	
Y	33	STREET LIGHTING	LOUTH ROAD	NEW WALTHAM	527761.21	404394.81	1986		52872	1 Urbis LED	Teceo 48 LED 700mA	104 Watts	10.00 Metres	Galvanised Steel	
Y	34	STREET LIGHTING	LOUTH ROAD	NEW WALTHAM	527759.99	404364.67	2022	01/04/2022	69667	Urbis	Ampera Maxi 80 LED 700m	163 Watts	10.00 Metres	Galvanised Steel	
Y	35	STREET LIGHTING	LOUTH ROAD	NEW WALTHAM	527784.71	404349.52	1986		52874	1 Urbis LED	Teceo 48 LED 700mA	104 Watts	10.00 Metres	Galvanised Steel	
Y	36	STREET LIGHTING	LOUTH ROAD	NEW WALTHAM	527782.65	404321.48	1986		52875	1 Urbis LED	Teceo 48 LED 700mA	104 Watts	10.00 Metres	Galvanised Steel	
Y	37	STREET LIGHTING	LOUTH ROAD	NEW WALTHAM	527794.57	404298.97	1986		52876	1 Urbis LED	Teceo 48 LED 700mA	104 Watts	10.00 Metres	Galvanised Steel	
Y	38	STREET LIGHTING	LOUTH ROAD	NEW WALTHAM	527819.27	404283.95	1986		52877	1 Urbis LED	Teceo 48 LED 700mA	104 Watts	10.00 Metres	Galvanised Steel	
Y	39	STREET LIGHTING	LOUTH ROAD	NEW WALTHAM	527816.6	404254.87	1986		52878	1 Urbis LED	Teceo 48 LED 700mA	104 Watts	10.00 Metres	Galvanised Steel	
Y	40	STREET LIGHTING	LOUTH ROAD	NEW WALTHAM	527842.56	404237.1	1986		52879	1 Urbis LED	Teceo 48 LED 700mA	104 Watts	10.00 Metres	Galvanised Steel	
Y	41	STREET LIGHTING	LOUTH ROAD	NEW WALTHAM	527838.51	404212.16	1986		52880	1 Urbis LED	Teceo 48 LED 700mA	104 Watts	10.00 Metres	Galvanised Steel	
Y	42	STREET LIGHTING	LOUTH ROAD	NEW WALTHAM	527864.48	404195.15	1986		52881	1 Urbis LED	Teceo 48 LED 700mA	104 Watts	10.00 Metres	Galvanised Steel	
Y	43	STREET LIGHTING	LOUTH ROAD	NEW WALTHAM	527862.34	404166.37	1986		52882	1 Urbis LED	Teceo 48 LED 700mA	104 Watts	10.00 Metres	Galvanised Steel	
Y	44	STREET LIGHTING	LOUTH ROAD	NEW WALTHAM	527874.32	404141.66	2003		52883	1 Urbis LED	Teceo 48 LED 700mA	104 Watts	10.00 Metres	Stainless Steel	
Y	45	STREET LIGHTING	LOUTH ROAD	NEW WALTHAM	527885.9	404121.56	1986		52884	1 Urbis LED	Teceo 48 LED 700mA	104 Watts	10.00 Metres	Galvanised Steel	
Y	46	STREET LIGHTING	LOUTH ROAD	NEW WALTHAM	527913.12	404099.43	1986		52885	1 Urbis LED	Teceo 48 LED 700mA	104 Watts	10.00 Metres	Galvanised Steel	
Y	47	STREET LIGHTING	LOUTH ROAD	NEW WALTHAM	527919.44	404064.88	1986		52886	1 Urbis LED	Teceo 48 LED 700mA	104 Watts	10.00 Metres	Galvanised Steel	
Y	48	STREET LIGHTING	LOUTH ROAD	NEW WALTHAM	527944.23	404040.29	1986		52887	1 Urbis LED	Teceo 48 LED 700mA	104 Watts	10.00 Metres	Galvanised Steel	
Y	49	STREET LIGHTING	LOUTH ROAD	NEW WALTHAM	527950.15	404006.27	1986		52888	1 Urbis LED	Teceo 48 LED 700mA	104 Watts	10.00 Metres	Galvanised Steel	
Y	50	STREET LIGHTING	LOUTH ROAD	NEW WALTHAM	527974.99	403981.14	1986		52889	1 Urbis LED	Teceo 48 LED 700mA	104 Watts	10.00 Metres	Galvanised Steel	
Y	51	STREET LIGHTING	LOUTH ROAD	NEW WALTHAM	527980.67	403946.38	1986		52890	1 Urbis LED	Teceo 48 LED 700mA	104 Watts	10.00 Metres	Galvanised Steel	
Y	52	STREET LIGHTING	LOUTH ROAD	NEW WALTHAM	528006.2	403921.59	1986		52891	1 Urbis LED	Teceo 48 LED 700mA	104 Watts	10.00 Metres	Galvanised Steel	
Y	53	STREET LIGHTING	LOUTH ROAD	NEW WALTHAM	528021.73	403890.89	1986		52892	1 Urbis LED	Teceo 48 LED 700mA	104 Watts	10.00 Metres	Galvanised Steel	
Y	54	STREET LIGHTING	LOUTH ROAD	NEW WALTHAM	528036.85	403861.38	1986		52893	1 Urbis LED	Teceo 48 LED 700mA	104 Watts	10.00 Metres	Galvanised Steel	
Y	55	STREET LIGHTING	LOUTH ROAD	NEW WALTHAM	528041.96	403827.63	1986		52894	1 Urbis LED	Teceo 48 LED 700mA	104 Watts	10.00 Metres	Galvanised Steel	
Y	56	STREET LIGHTING	LOUTH ROAD	NEW WALTHAM	528066.6	403804.46	1986		52895	1 Urbis LED	Teceo 48 LED 700mA	104 Watts	10.00 Metres	Galvanised Steel	
Y	57	STREET LIGHTING	LOUTH ROAD	NEW WALTHAM	528072.38	403770.45	2002		52896	1 Urbis LED	Teceo 48 LED 700mA	104 Watts	10.00 Metres	Stainless Steel	
Y	58	STREET LIGHTING	LOUTH ROAD	NEW WALTHAM	528096.22	403744.83	1986		52897	1 Urbis LED	Teceo 48 LED 700mA	104 Watts	10.00 Metres	Galvanised Steel	
Y	59	STREET LIGHTING	LOUTH ROAD	NEW WALTHAM	528101.98	403710.93	1986		52898	1 Urbis LED	Teceo 48 LED 700mA	104 Watts	10.00 Metres	Galvanised Steel	
Y	60	STREET LIGHTING	LOUTH ROAD	NEW WALTHAM	528126.91	403687.65	1986		52899	1 Urbis LED	Teceo 48 LED 700mA	104 Watts	10.00 Metres	Galvanised Steel	
Y	61	STREET LIGHTING	LOUTH ROAD	NEW WALTHAM	528129.67	403652.23	1986		52900	1 Urbis LED	Teceo 48 LED 700mA	104 Watts	10.00 Metres	Galvanised Steel	
Y	62	STREET LIGHTING	LOUTH ROAD	NEW WALTHAM	528154.17	403628.73	1986		52901	1 Urbis LED	Teceo 48 LED 700mA	104 Watts	10.00 Metres	Galvanised Steel	
Y	63	STREET LIGHTING	LOUTH ROAD	NEW WALTHAM	528155.21	403591.91	1986		52902	1 Urbis LED	Teceo 48 LED 700mA	104 Watts	10.00 Metres	Galvanised Steel	
Y	1	STREET LIGHTING	MARGARET PLACE	NEW WALTHAM	528412.32	404629.76	1993		53252	1 Urbis LED	Axia 16 LED 500mA	28 Watts	5.00 Metres	Galvanised Steel	
Y	2	STREET LIGHTING	MARGARET PLACE	NEW WALTHAM	528445.36	404615.14	2014		62881	1 Urbis LED	Axia 16 LED 500mA	28 Watts	6.00 Metres	Galvanised Steel	
Y	3	STREET LIGHTING	MARGARET PLACE	NEW WALTHAM	528472.7	404575.39	2014		62882	1 Urbis LED	Axia 16 LED 500mA	28 Watts	6.00 Metres	Galvanised Steel	
Y	1	STREET LIGHTING	PEMBERTON DRIVE	NEW WALTHAM	527927.36	404631.8	2014		62896	Urbis	Axia 16 LED 350mA	19 Watts	6.00 Metres	Galvanised Steel	
Y	2	STREET LIGHTING	PEMBERTON DRIVE	NEW WALTHAM	527921.79	404676.92	2014	30/06/2014	62897	Urbis	Axia 16 LED 350mA	19 Watts	6.00 Metres	Galvanised Steel	
Y	3	STREET LIGHTING	PEMBERTON DRIVE	NEW WALTHAM	527884.45	404659.39	2014	30/06/2014	62898	Urbis	Axia 16 LED 350mA	19 Watts	6.00 Metres	Galvanised Steel	
Y	4	STREET LIGHTING	PEMBERTON DRIVE	NEW WALTHAM	527913.06	404705.4	1983		55256	Urbis	Axia 16 LED 350mA	19 Watts	5.00 Metres	Galvanised Steel	
Y	1	STREET LIGHTING	PRETYMEN CRESCENT	NEW WALTHAM	528337.08	404685.42	1999		55570	Urbis	Axia 16 LED 350mA	19 Watts	6.00 Metres	Galvanised Steel	
Y	2	STREET LIGHTING	PRETYMEN CRESCENT	NEW WALTHAM	528345.56	404663.01	1999		55571	Urbis	Axia 16 LED 350mA	19 Watts	6.00 Metres	Galvanised Steel	
Y	3	STREET LIGHTING	PRETYMEN CRESCENT	NEW WALTHAM	528355.05	404636.75	1999		55572	Urbis	Axia 16 LED 350mA	19 Watts	6.00 Metres	Galvanised Steel	
Y	4	STREET LIGHTING	PRETYMEN CRESCENT	NEW WALTHAM	528369.41	404612.22	1999		55573	Urbis	Axia 16 LED 350mA	19 Watts	6.00 Metres	Galvanised Steel	
Y	5	STREET LIGHTING	PRETYMEN CRESCENT	NEW WALTHAM	528384.6	404591.91	1999		55574	Urbis	Axia 16 LED 350mA	19 Watts	6.00 Metres	Galvanised Steel	
Y	6	STREET LIGHTING	PRETYMEN CRESCENT	NEW WALTHAM	528397.26	404575.52	1999		55575	Urbis	Axia 16 LED 350mA	19 Watts	6.00 Metres	Galvanised Steel	
Y	7	STREET LIGHTING	PRETYMEN CRESCENT	NEW WALTHAM	528406.24	404549.95	1999		55576	Urbis	Axia 16 LED 350mA	19 Watts	6.00 Metres	Galvanised Steel	
Y	8	STREET LIGHTING	PRETYMEN CRESCENT	NEW WALTHAM	528403.71	404520.52	1999		55577	Urbis	Axia 16 LED 350mA	19 Watts	6.00 Metres	Galvanised Steel	
Y	9	STREET LIGHTING	PRETYMEN CRESCENT	NEW WALTHAM	528393.58	404499.69	1999		55578	Urbis	Axia 16 LED 350mA	19 Watts	6.00 Metres	Galvanised Steel	
Y	10	STREET LIGHTING	PRETYMEN CRESCENT	NEW WALTHAM	528379.79	404483.62	1999		55579	Urbis	Axia 16 LED 350mA	19 Watts	6.00 Metres	Galvanised Steel	
Y	11	STREET LIGHTING	PRETYMEN CRESCENT	NEW WALTHAM	528356.12	404465.96	1999		55580	Urbis	Axia 16 LED 350mA	19 Watts	6.00 Metres	Galvanised Steel	
Y	12	STREET LIGHTING	PRETYMEN CRESCENT	NEW WALTHAM	528336.37	404467.41	1999		55581	Urbis	Axia 16 LED 350mA	19 Watts	6.00 Metres	Galvanised Steel	
Y	13	STREET LIGHTING	PRETYMEN CRESCENT	NEW WALTHAM	528320.66	404449.71	1999		55582	Urbis	Axia 16 LED 350mA	19 Watts	6.00 Metres	Galvanised Steel	
Y	14	STREET LIGHTING	PRETYMEN CRESCENT	NEW WALTHAM	528290.03	404438.63	1999		55583	Urbis	Axia 16 LED 350mA	19 Watts	6.00 Metres	Galvanised Steel	
Y	15	STREET LIGHTING	PRETYMEN CRESCENT	NEW WALTHAM	528258.51	404427.87	1999		55584	Urbis	Axia 16 LED 350mA	19 Watts	6.00 Metres	Galvanised Steel	
Y	16	STREET LIGHTING	PRETYMEN CRESCENT	NEW WALTHAM	528229.78	404429.24	1999		55585	Urbis	Axia 16 LED 350mA	19 Watts	6.00 Metres	Galvanised Steel	
Y	17	STREET LIGHTING	PRETYMEN CRESCENT	NEW WALTHAM	528201.81	404408.17	1999		55586	Urbis	Axia 16 LED 350mA	19 Watts	6.00 Metres	Galvanised Steel	
Y	18	STREET LIGHTING	PRETYMEN CRESCENT	NEW WALTHAM	528180.8	404409.62	1999		55587	Urbis	Axia 16 LED 350mA	19 Watts	6.00 Metres	Galvanised Steel	
Y	19	STREET LIGHTING	PRETYMEN CRESCENT	NEW WALTHAM	528163.33	404385.26	1999		55588	Urbis	Axia 16 LED 350mA	19 Watts	6.00 Metres	Galvanised Steel	
Y	20	STREET LIGHTING	PRETYMEN CRESCENT	NEW WALTHAM	528161.94	404420.7	1999		55589	Urbis	Axia 16 LED 350mA	19 Watts	6.00 Metres	Galvanised Steel	
Y	21	STREET LIGHTING	PRETYMEN CRESCENT	NEW WALTHAM	528161.81	404442.53	1999		55590	Urbis	Axia 16 LED 350mA	19 Watts	6.00 Metres	Galvanised Steel	
Y	22	STREET LIGHTING	PRETYMEN CRESCENT	NEW WALTHAM	528129.03	404439.05	1999		55591	Urbis	Axia 16 LED 350mA	19 Watts	6.00 Metres	Galvanised Steel	
Y	1	STREET LIGHTING	STATION ROAD	NEW WALTHAM	528649.51	404804.38	2017		58283	1 Urbis LED	Teceo 48 LED 500mA	79 Watts	10.00 Metres	Steel	
Y	2	STREET LIGHTING	STATION ROAD	NEW WALTHAM	528617.53	404806.21	1988		58284	1 Urbis LED	Teceo 48 LED 500mA	79 Watts	10.00 Metres	Galvanised Steel	
Y	3	STREET LIGHTING	STATION ROAD	NEW WALTHAM	528606.29	404790.07	2021	12/02/2021	68280	Urbis	Teceo 48 LED 500mA	79 Watts	12.00 Metres	Galvanised Steel	
Y	4	STREET LIGHTING	STATION ROAD	NEW WALTHAM	528580.32	404793.11	1988		58286	1 Urbis LED	Teceo 48 LED 500mA	79 Watts	10.00 Metres	Galvanised Steel	
Y	5	STREET LIGHTING	STATION ROAD	NEW WALTHAM	528552.22	404770.33	1988		58287	1 Urbis LED	Teceo 48 LED 500mA	79 Watts	10.00 Metres	Galvanised Steel	
Y	6	STREET LIGHTING	STATION ROAD	NEW WALTHAM	528516.78	404772.17	1988		58288	1 Urbis LED	Teceo 48 LED 500mA	79 Watts	10.00 Metres	Galvanised Steel	
Y	7	STREET LIGHTING	STATION ROAD	NEW WALTHAM	528485.13	404748.31	1988		58289	1 Urbis LED	Teceo 48 LED 500mA	79 Watts	10.00 Metres	Galvanised Steel	

Y	8	STREET LIGHTING	STATION ROAD	NEW WALTHAM	528451.62	404750.17	2003		58290	1 Urbis LED	Teceo 48 LED 500mA	79 Watts	10.00 Metres	Stainless Steel	
Y	9	STREET LIGHTING	STATION ROAD	NEW WALTHAM	528423.74	404726.81	1988		58291	1 Urbis LED	Teceo 48 LED 500mA	79 Watts	10.00 Metres	Galvanised Steel	
Y	10	STREET LIGHTING	STATION ROAD	NEW WALTHAM	528385.61	404728.51	2003		58292	1 Urbis LED	Teceo 48 LED 500mA	79 Watts	10.00 Metres	Stainless Steel	
Y	11	STREET LIGHTING	STATION ROAD	NEW WALTHAM	528378.33	404709.86	2003		58293	1 Urbis LED	Teceo 48 LED 500mA	79 Watts	10.00 Metres	Stainless Steel	
Y	12	STREET LIGHTING	STATION ROAD	NEW WALTHAM	528362.33	404704.87	2003		58294	1 Urbis LED	Teceo 48 LED 500mA	79 Watts	10.00 Metres	Stainless Steel	
Y	13	STREET LIGHTING	STATION ROAD	NEW WALTHAM	528324.81	404706.83	1988		58295	1 Urbis LED	Teceo 48 LED 500mA	79 Watts	10.00 Metres	Galvanised Steel	
Y	14	STREET LIGHTING	STATION ROAD	NEW WALTHAM	528303.54	404698.94	2010		66861	1 Urbis LED	Teceo 48 LED 500mA	79 Watts	10.00 Metres	Galvanised Steel	
Y	15	STREET LIGHTING	STATION ROAD	NEW WALTHAM	528281.58	404691.17	2010		58296	1 Urbis LED	Teceo 48 LED 500mA	79 Watts	10.00 Metres	Galvanised Steel	
Y	16	STREET LIGHTING	STATION ROAD	NEW WALTHAM	528261.29	404669.47	1988		58297	1 Urbis LED	Teceo 48 LED 500mA	79 Watts	10.00 Metres	Galvanised Steel	
Y	17	STREET LIGHTING	STATION ROAD	NEW WALTHAM	528228.96	404662.68	1988		58298	1 Urbis LED	Teceo 48 LED 500mA	79 Watts	10.00 Metres	Galvanised Steel	
Y	18	STREET LIGHTING	STATION ROAD	NEW WALTHAM	528196.16	404649.68	1988		58299	1 Urbis LED	Teceo 48 LED 500mA	79 Watts	10.00 Metres	Galvanised Steel	
Y	19	STREET LIGHTING	STATION ROAD	NEW WALTHAM	528157.65	404646.69	2021	12/02/2021	68450	Urbis	Teceo 48 LED 500mA	79 Watts	12.00 Metres	Galvanised Steel	
Y	20	STREET LIGHTING	STATION ROAD	NEW WALTHAM	528133.61	404638.31	2003		58301	1 Urbis LED	Teceo 48 LED 500mA	79 Watts	10.00 Metres	Stainless Steel	
Y	21	STREET LIGHTING	STATION ROAD	NEW WALTHAM	528115.88	404622.58	2003		58302	1 Urbis LED	Teceo 48 LED 500mA	79 Watts	10.00 Metres	Stainless Steel	
Y	22	STREET LIGHTING	STATION ROAD	NEW WALTHAM	528096.56	404631.73	2003		58303	1 Urbis LED	Teceo 48 LED 500mA	79 Watts	10.00 Metres	Stainless Steel	
Y	23	STREET LIGHTING	STATION ROAD	NEW WALTHAM	528101.36	404618.84	2003		58304	1 Urbis LED	Teceo 48 LED 500mA	79 Watts	10.00 Metres	Stainless Steel	
Y	24	STREET LIGHTING	STATION ROAD	NEW WALTHAM	528078.95	404611.34	1983		58305	1 Urbis LED	Teceo 48 LED 500mA	79 Watts	10.00 Metres	Galvanised Steel	
Y	25	STREET LIGHTING	STATION ROAD	NEW WALTHAM	528043.32	404606.96	2003		58306	1 Urbis LED	Teceo 48 LED 500mA	79 Watts	10.00 Metres	Stainless Steel	
Y	26	STREET LIGHTING	STATION ROAD	NEW WALTHAM	528003.46	404582.48	1989		58307	1 Urbis LED	Teceo 48 LED 500mA	79 Watts	10.00 Metres	Galvanised Steel	
Y	27	STREET LIGHTING	STATION ROAD	NEW WALTHAM	527963.48	404579.88	2003		58308	1 Urbis LED	Teceo 48 LED 500mA	79 Watts	10.00 Metres	Stainless Steel	
Y	28	STREET LIGHTING	STATION ROAD	NEW WALTHAM	527926.26	404559.68	1983		58309	1 Urbis LED	Teceo 48 LED 500mA	79 Watts	10.00 Metres	Galvanised Steel	
Y	29	STREET LIGHTING	STATION ROAD	NEW WALTHAM	527889.82	404545.56	2003		58310	1 Urbis LED	Teceo 48 LED 500mA	79 Watts	10.00 Metres	Stainless Steel	
Y	30	STREET LIGHTING	STATION ROAD	NEW WALTHAM	527862.28	404538.2	1983		58311	1 Urbis LED	Teceo 48 LED 500mA	79 Watts	10.00 Metres	Galvanised Steel	
Y	31	STREET LIGHTING	STATION ROAD	NEW WALTHAM	527827.79	404536.83	2007		58312	1 Urbis LED	Teceo 48 LED 500mA	79 Watts	10.00 Metres	Stainless Steel	
Y	32	STREET LIGHTING	STATION ROAD	NEW WALTHAM	527801.93	404528.86	2007		58313	1 Urbis LED	Teceo 48 LED 500mA	79 Watts	10.00 Metres	Stainless Steel	
Y	33	STREET LIGHTING	STATION ROAD	NEW WALTHAM	527773.73	404504.88	2022	01/04/2022	69672	Urbis	Ampera Maxi 80 LED 700m	163 Watts	10.00 Metres	Galvanised Steel	
Y	34	STREET LIGHTING	STATION ROAD	NEW WALTHAM	527755.47	404495.61	2022	01/04/2022	69673	Urbis	Ampera Maxi 80 LED 700m	163 Watts	10.00 Metres	Galvanised Steel	
Y	1	STREET LIGHTING	THORNTON COURT	NEW WALTHAM	528521.67	405557.85	2008		59142	Urbis	Axia 16 LED 350mA	19 Watts	5.00 Metres	Stainless Steel	
Y	2	STREET LIGHTING	THORNTON COURT	NEW WALTHAM	528522.33	405534.88	2008		59143	Urbis	Axia 16 LED 350mA	19 Watts	5.00 Metres	Stainless Steel	
Y	3	STREET LIGHTING	THORNTON COURT	NEW WALTHAM	528526.51	405507.93	2006		59144	Urbis	Axia 16 LED 350mA	19 Watts	5.00 Metres	Stainless Steel	
Y	4	STREET LIGHTING	THORNTON COURT	NEW WALTHAM	528530	405476.01	2006		59145	Urbis	Axia 16 LED 350mA	19 Watts	5.00 Metres	Stainless Steel	
Y	5	STREET LIGHTING	THORNTON COURT	NEW WALTHAM	528507.1	405482.5	2006		59146	Urbis	Axia 16 LED 350mA	19 Watts	5.00 Metres	Stainless Steel	
Y	1	STREET LIGHTING	WAYSIDE DRIVE	NEW WALTHAM	528435.82	405430.64	2023	14/02/2023	69202	Urbis	Axia 16 LED 350mA	19 Watts	6.00 Metres	Galvanised Steel	
Y	2	STREET LIGHTING	WAYSIDE DRIVE	NEW WALTHAM	528413.46	405413.35	2014		62911	Urbis	Axia 16 LED 350mA	19 Watts	6.00 Metres	Galvanised Steel	
Y	3	STREET LIGHTING	WAYSIDE DRIVE	NEW WALTHAM	528380.55	405410.63	2014		62912	Urbis	Axia 16 LED 350mA	19 Watts	6.00 Metres	Galvanised Steel	
Y	4	STREET LIGHTING	WAYSIDE DRIVE	NEW WALTHAM	528355.36	405392.72	2014		62913	Urbis	Axia 16 LED 350mA	19 Watts	6.00 Metres	Galvanised Steel	
Y	5	STREET LIGHTING	WAYSIDE DRIVE	NEW WALTHAM	528334.48	405394.17	2014		62914	Urbis	Axia 16 LED 350mA	19 Watts	6.00 Metres	Galvanised Steel	
Y	6	STREET LIGHTING	WAYSIDE DRIVE	NEW WALTHAM	528337.77	405409.87	2014		62915	Urbis	Axia 16 LED 350mA	19 Watts	6.00 Metres	Galvanised Steel	
Y	1	STREET LIGHTING	HEWITTS AVENUE	NEW WALTHAM	529535.28	406730.68	2007		50565	1 Urbis LED	Teceo 48 LED 700mA	104 Watts	10.00 Metres	Stainless Steel	
Y	2	STREET LIGHTING	HEWITTS AVENUE	NEW WALTHAM	529531.12	406696.66	2007		50566	1 Urbis LED	Teceo 48 LED 700mA	104 Watts	10.00 Metres	Stainless Steel	
Y	3	STREET LIGHTING	HEWITTS AVENUE	NEW WALTHAM	529511.58	406677.04	2007		50567	1 Urbis LED	Teceo 48 LED 700mA	104 Watts	10.00 Metres	Stainless Steel	
Y	4	STREET LIGHTING	HEWITTS AVENUE	NEW WALTHAM	529493.36	406657.13	2007		50568	1 Urbis LED	Teceo 48 LED 700mA	104 Watts	10.00 Metres	Stainless Steel	
Y	5	STREET LIGHTING	HEWITTS AVENUE	NEW WALTHAM	529461.12	406679.74	2007		50569	1 Urbis LED	Teceo 48 LED 500mA	79 Watts	10.00 Metres	Stainless Steel	
Y	6	STREET LIGHTING	HEWITTS AVENUE	NEW WALTHAM	529465.34	406627.15	2007		50570	1 Urbis LED	Teceo 48 LED 500mA	79 Watts	10.00 Metres	Stainless Steel	
Y	7	STREET LIGHTING	HEWITTS AVENUE	NEW WALTHAM	529437.58	406626.25	2007		50571	1 Urbis LED	Teceo 48 LED 500mA	79 Watts	10.00 Metres	Stainless Steel	
Y	8	STREET LIGHTING	HEWITTS AVENUE	NEW WALTHAM	529450.03	406601.44	2007		50572	1 Urbis LED	Teceo 48 LED 500mA	79 Watts	10.00 Metres	Stainless Steel	
Y	9	STREET LIGHTING	HEWITTS AVENUE	NEW WALTHAM	529447.65	406580.28	2007		50573	1 Urbis LED	Teceo 48 LED 500mA	79 Watts	10.00 Metres	Stainless Steel	
Y	10	STREET LIGHTING	HEWITTS AVENUE	NEW WALTHAM	529413.38	406599.82	2007		50574	1 Urbis LED	Teceo 48 LED 500mA	79 Watts	10.00 Metres	Stainless Steel	
Y	11	STREET LIGHTING	HEWITTS AVENUE	NEW WALTHAM	529432.09	406562.22	2007		50575	1 Urbis LED	Teceo 48 LED 500mA	79 Watts	10.00 Metres	Stainless Steel	
Y	12	STREET LIGHTING	HEWITTS AVENUE	NEW WALTHAM	529405.15	406564.29	2007		50576	1 Urbis LED	Teceo 48 LED 500mA	79 Watts	10.00 Metres	Stainless Steel	
Y	13	STREET LIGHTING	HEWITTS AVENUE	NEW WALTHAM	529382.52	406569.64	2007		50577	1 Urbis LED	Teceo 48 LED 500mA	79 Watts	10.00 Metres	Stainless Steel	
Y	14	STREET LIGHTING	HEWITTS AVENUE	NEW WALTHAM	529386.34	406550.61	2007		50578	1 Urbis LED	Teceo 48 LED 500mA	79 Watts	10.00 Metres	Stainless Steel	
Y	15	STREET LIGHTING	HEWITTS AVENUE	NEW WALTHAM	529360.95	406544.13	2007		50579	1 Urbis LED	Teceo 48 LED 500mA	79 Watts	10.00 Metres	Stainless Steel	
Y	16	STREET LIGHTING	HEWITTS AVENUE	NEW WALTHAM	529352.74	406515.36	2007		50580	1 Urbis LED	Teceo 48 LED 700mA	104 Watts	10.00 Metres	Stainless Steel	
Y	17	STREET LIGHTING	HEWITTS AVENUE	NEW WALTHAM	529323.6	406504.62	2007		50581	1 Urbis LED	Teceo 48 LED 700mA	104 Watts	10.00 Metres	Stainless Steel	
Y	18	STREET LIGHTING	HEWITTS AVENUE	NEW WALTHAM	529317.33	406473.31	2007		50582	1 Urbis LED	Teceo 48 LED 700mA	104 Watts	10.00 Metres	Stainless Steel	
Y	19	STREET LIGHTING	HEWITTS AVENUE	NEW WALTHAM	529288.46	406460.19	2007		50583	1 Urbis LED	Teceo 48 LED 700mA	104 Watts	10.00 Metres	Stainless Steel	
Y	20	STREET LIGHTING	HEWITTS AVENUE	NEW WALTHAM	529287.23	406431.03	2007		50584	1 Urbis LED	Teceo 48 LED 700mA	104 Watts	10.00 Metres	Stainless Steel	
Y	21	STREET LIGHTING	HEWITTS AVENUE	NEW WALTHAM	529259.95	406420.75	2007		50585	1 Urbis LED	Teceo 48 LED 700mA	104 Watts	10.00 Metres	Stainless Steel	
Y	22	STREET LIGHTING	HEWITTS AVENUE	NEW WALTHAM	529255.96	406390.39	2007		50586	1 Urbis LED	Teceo 48 LED 700mA	104 Watts	10.00 Metres	Stainless Steel	
Y	23	STREET LIGHTING	HEWITTS AVENUE	NEW WALTHAM	529230.31	406375.8	2007		50587	1 Urbis LED	Teceo 48 LED 700mA	104 Watts	10.00 Metres	Stainless Steel	
Y	24	STREET LIGHTING	HEWITTS AVENUE	NEW WALTHAM	529227.94	406347.01	2007		50588	1 Urbis LED	Teceo 48 LED 700mA	104 Watts	10.00 Metres	Stainless Steel	
Y	25	STREET LIGHTING	HEWITTS AVENUE	NEW WALTHAM	529211.99	406320.58	2007		50589	1 Urbis LED	Teceo 48 LED 700mA	104 Watts	10.00 Metres	Stainless Steel	
Y	26	STREET LIGHTING	HEWITTS AVENUE	NEW WALTHAM	529192.9	406293.33	2007		50590	1 Urbis LED	Teceo 48 LED 700mA	104 Watts	10.00 Metres	Stainless Steel	
Y	27	STREET LIGHTING	HEWITTS AVENUE	NEW WALTHAM	529166.98	406256.09	2007		50591	1 Urbis LED	Teceo 48 LED 700mA	104 Watts	10.00 Metres	Stainless Steel	
Y	28	STREET LIGHTING	HEWITTS AVENUE	NEW WALTHAM	529143.68	406226.79	1983		50592	1 Urbis LED	Teceo 48 LED 700mA	104 Watts	10.00 Metres	Galvanised Steel	
Y	29	STREET LIGHTING	HEWITTS AVENUE	NEW WALTHAM	529116.34	406201.17	1983		50593	1 Urbis LED	Teceo 48 LED 700mA	104 Watts	10.00 Metres	Galvanised Steel	
Y	30	STREET LIGHTING	HEWITTS AVENUE	NEW WALTHAM	529092.23	406181.22	1983		50594	1 Urbis LED	Teceo 48 LED 700mA	104 Watts	10.00 Metres	Galvanised Steel	
Y	31	STREET LIGHTING	HEWITTS AVENUE	NEW WALTHAM	529069.15	406162.99	1997		50595	1 Urbis LED	Teceo 48 LED 700mA	104 Watts	10.00 Metres	Galvanised Steel	
Y	32	STREET LIGHTING	HEWITTS AVENUE	NEW WALTHAM	529045.41	406145.07	1997		50596	1 Urbis LED	Teceo 48 LED 700mA	104 Watts	10.00 Metres	Galvanised Steel	
Y	33	STREET LIGHTING	HEWITTS AVENUE	NEW WALTHAM	529019.48	406125.73	1997		50597	1 Urbis LED	Teceo 48 LED 700mA	104 Watts	10.00 Metres	Galvanised Steel	
Y	34	STREET LIGHTING	HEWITTS AVENUE	NEW WALTHAM	528992.95	406105.98	1997		50598	1 Urbis LED	Teceo 48 LED 700mA	104 Watts	10.00 Metres	Galvanised Steel	
Y	35	STREET LIGHTING	HEWITTS AVENUE	NEW WALTHAM	528967.23	406086.84	1997		50599	1 Urbis LED	Teceo 48 LED 700mA	104 Watts	10.00 Metres	Galvanised Steel	
Y	36	STREET LIGHTING	HEWITTS AVENUE	NEW WALTHAM	528944.14	406069.73	1997		50600	1 Urbis LED	Teceo 48 LED 700mA	104 Watts	10.00 Metres	Galvanised Steel	
Y	37	STREET LIGHTING	HEWITTS AVENUE	NEW WALTHAM	528919.43	406051.2	1997		50601	1 Urbis LED	Teceo 48 LED 700mA	104 Watts	10.00 Metres	Galvanised Steel	
Y	38	STREET LIGHTING	HEWITTS AVENUE	NEW WALTHAM	528895.33	406033.27	1997		50602	1 Urbis LED	Teceo 48 LED 700mA	104 Watts	10.00 Metres	Galvanised Steel	
Y	39	STREET LIGHTING	HEWITTS AVENUE	NEW WALTHAM	528870.22	406015.96	1997		50603	1 Urbis LED	Teceo 48 LED 700mA	104 Watts	10.00 Metres	Galvanised Steel	
Y	40	STREET LIGHTING	HEWITTS AVENUE	NEW WALTHAM	528844.49	405998.13	1997		50604	1 Urbis LED	Teceo 48 LED 700mA	104 Watts	10.00 Metres	Galvanised Steel	
Y	41	STREET LIGHTING	HEWITTS AVENUE	NEW WALTHAM	528821.03	405983.71	1997		50605	1 Urbis LED	Teceo 48 LED 700mA	104 Watts	10.00 Metres	Galvanised Steel	
Y	42	STREET LIGHTING	HEWITTS AVENUE	NEW WALTHAM	528788.83	405983.41	1997		50606	1 Urbis LED	Teceo 48 LED 700mA	104 Watts	10.00 Metres	Galvanised Steel	
Y	43	STREET LIGHTING	HEWITTS AVENUE	NEW WALTHAM	528767.02	405957.54	1997		50607	1 Urbis LED	Teceo 48 LED 700mA	104 Watts	10.00 Metres	Galvanised Steel	
Y	44	STREET LIGHTING	HEWITTS AVENUE	NEW WALTHAM	528750.44	405965.77	1997		50608	Urbis	Ampera 48 LED 700mA	104 Watts	10.00 Metres	Galvanised Steel	
Y	45	STREET LIGHTING	HEWITTS AVENUE	NEW WALTHAM	528729.73	405943.7	1997		62970	1 Urbis LED	Teceo 48 LED 700mA	104 Watts	10.00 Metres	Galvanised Steel	
Y	46	STREET LIGHTING	HEWITTS AVENUE	NEW WALTHAM	528698.54	405948.66	1997		50609	1 Urbis LED	Teceo 48 LED 700mA	104 Watts	6.00 Metres	Galvanised Steel	
Y	47	STREET LIGHTING	HEWITTS AVENUE	NEW WALTHAM	528674.44	405924.25	1997		50610	1 Urbis LED	Teceo 48 LED 700mA	104 Watts	6.00 Metres	Galvanised Steel	
Y	48	STREET LIGHTING	HEWITTS AVENUE	NEW WALTHAM	528643.86	405929.62	1997		50611	1 Urbis LED	Teceo 48 LED 700mA	104 Watts	10.00 Metres	Galvanised Steel	
Y	49	STREET LIGHTING	HEWITTS AVENUE	NEW WALTHAM	528621.58	405907.34	1983		50612	1 Urbis LED	Teceo 48 LED 700mA	104 Watts	10.00 Metres	Galvanised Steel	
Y	50	STREET LIGHTING	HEWITTS AVENUE	NEW WALTHAM	528590.39	405910.79	1983		50613	1 Urbis LED	Teceo 48 LED 700mA	104 Watts	10.00 Metres	Galvanised Steel	
Y	51	STREET LIGHTING	HEWITTS AVENUE	NEW WALTHAM	528567.3	405888.51	1983		50614	1 Urbis LED	Teceo 48 LED 700mA	104 Watts	10.00 Metres	Galvanised Steel	
Y	52	STREET LIGHTING	HEWITTS AVENUE	NEW WALTHAM	528534.89	405891.44	1983		50615	1 Urbis LED	Teceo 48 LED 700mA	104 Watts	10.00 Metres	Galvanised Steel	
Y	53	STREET LIGHTING	HEWITTS AVENUE	NEW WALTHAM	528511.4	405869.16	1997		50616	1 Urbis LED	Teceo 48 LED 700mA	104 Watts	10.00 Metres	Galvanised Steel	
Y	54	STREET LIGHTING	HEWITTS AVENUE	NEW WALTHAM	528478.59	405871.39	1997		50617	1 Urbis LED	Teceo 48 LED 700mA	104 Watts	10.00 Metres	Galvanised Steel	
Y	55	STREET LIGHTING	HEWITTS AVENUE	NEW WALTHAM	528456.72	405849.32	1997		50618	1 Urbis LED	Teceo 48 LED 700mA	104 Watts	10.00 Metres	Galvanised Steel	
Y	56	STREET LIGHTING	HEWITTS AVENUE	NEW WALTHAM	528423.91	405851.85	1997		50619	1 Urbis LED	Teceo 48 LED 700mA	104 Watts	10.00 Metres	Galvanised Steel	
Y	57	STREET LIGHTING	HEWITTS AVENUE	NEW WALTHAM	528400.61	405829.57	1997		50620	1 Urbis LED	Teceo 48 LED 700mA	104 Watts	10.00 Metres	Galvanised Steel	
Y	58	STREET LIGHTING	HEWITTS AVENUE	NEW WALTHAM	528367.8	405832.1	1997		50621	1 Urbis LED	Teceo 48 LED 700mA	104 Watts	10.00 Metres	Galvanised Steel	
Y	59	STREET LIGHTING	HEWITTS AVENUE	NEW WALTHAM	528345.53	405810.53	1997		50622	1 Urbis LED	Teceo 48 LED 700mA	104 Watts	10.00 Metres	Galvanised Steel	
Y	60	STREET LIGHTING	HEWITTS AVENUE	NEW WALTHAM	528313.93	405813.67	1997		50623	1 Urbis LED	Teceo 48 LED 700mA	104 Watts	10.00 Metres	Galvanised Steel	
Y	61	STREET LIGHTING	HEWITTS AVENUE	NEW WALTHAM	528289.63	405792.81	1997		50624	1 Urbis LED	Teceo 48 LED 700mA	104 Watts	10.00 Metres	Galvanised Steel	
Y	62	STREET LIGHTING	HEWITTS AVENUE	NEW WALTHAM	528260.46	405798.58	1997		50625	1 Urbis LED	Teceo 48 LED 700mA	104 Watts	10.00 Metres	Galvanised Steel	
Y	63	STREET LIGHTING	HEWITTS AVENUE	NEW WALTHAM	528232.46	405778.83	1997		50626	1 Urbis LED	Teceo 48 LED 700mA	104 Watts	10.00 Metres	Galvanised Steel	
Y	64	STREET LIGHTING	HEWITTS AVENUE	NEW WALTHAM	528228.67	405800.16	2022	24/08/2022	50627	Urbis	Teceo 48 LED 700mA	104 Watts	12.00 Metres	Galvanised Steel	
Y	1	STREET LIGHTING	HUMBERSTON AVENUE	HUMBERSTON	528681.79	404823.91	2022	11/11/2022	69117	Urbis	Teceo 48 LED 700mA	104 Watts	8.00 Metres	Galvanised Steel	
Y	2	STREET LIGHTING	HUMBERSTON AVENUE	HUMBERSTON	528719.92	404819.58	2007		51050	1 Urbis LED	Teceo 48 LED 700mA	104 Watts	8.00 Metres	Steel	
Y	3	STREET LIGHTING	HUMBERSTON AVENUE	HUMBERSTON	528755.62	404840.99	2007		51051	1 Urbis LED	Teceo 48 LED 700mA	104 Watts	8.00 Metres	Steel	
Y	4	STREET LIGHTING	HUMBERSTON AVENUE	HUMBERSTON	528791.4	404834.33	2015	03/11/2015	51052	1 Urbis LED	Teceo 48 LED 700mA	104 Watts	8.00 Metres	Galvanised Steel	
Y	5	STREET LIGHTING	HUMBERSTON AVENUE	HUMBERSTON	528830.09	404852.66	1983		51053	1 Urbis LED	Teceo 48 LED 700mA	104 Watts	8.00 Metres	Galvanised Steel	
Y	6	STREET LIGHTING	HUMBERSTON AVENUE	HUMBERSTON	528867.96	404849.36	2015	03/11/2015	51054	1 Urbis LED	Teceo 48 LED 700mA	104 Watts	8.00 Metres	Galvanised Steel	
Y	7	STREET LIGHTING	HUMBERSTON AVENUE	HUMBERSTON	528907.41	404857.37	1983		51055	1 Urbis LED	Teceo 48 LED 700mA	104 Watts	8.00 Metres	Galvanised Steel	
Y	8	STREET LIGHTING	HUMBERSTON AVENUE	HUMBERSTON	528946.67	404880.67	2009		63017	1 Urbis LED	Teceo 40 LED 500mA	64 Watts	8.00 Metres	Galvanised Steel	

Y	9	STREET LIGHTING	HUMBERSTON AVENUE	HUMBERSTON	528958.27	404866.81	2009		51056	1 Urbis LED	Teceo 48 LED 700mA	104 Watts	8.00 Metres	Galvanised Steel	
Y	10	STREET LIGHTING	HUMBERSTON AVENUE	HUMBERSTON	528963.69	404881.39	2009		63018	1 Urbis LED	Teceo 40 LED 500mA	64 Watts	8.00 Metres	Galvanised Steel	
Y	11	STREET LIGHTING	HUMBERSTON AVENUE	HUMBERSTON	528984.64	404882.96	1983		51057	1 Urbis LED	Teceo 48 LED 700mA	104 Watts	8.00 Metres	Galvanised Steel	
Y	12	STREET LIGHTING	HUMBERSTON AVENUE	HUMBERSTON	529020.77	404877.83	1983		51058	1 Urbis LED	Teceo 48 LED 700mA	104 Watts	8.00 Metres	Galvanised Steel	
Y	13	STREET LIGHTING	HUMBERSTON AVENUE	HUMBERSTON	529063.15	404884.34	2017	31/03/2017	51059	1 Urbis LED	Teceo 48 LED 700mA	104 Watts	8.00 Metres	Galvanised Steel	
Y	14	STREET LIGHTING	HUMBERSTON AVENUE	HUMBERSTON	529095.01	404890.67	2017	31/03/2017	51060	1 Urbis LED	Teceo 48 LED 700mA	104 Watts	8.00 Metres	Galvanised Steel	
Y	15	STREET LIGHTING	HUMBERSTON AVENUE	HUMBERSTON	529134.28	404899.18	2017	31/03/2017	51061	1 Urbis LED	Teceo 48 LED 700mA	104 Watts	8.00 Metres	Galvanised Steel	
Y	16	STREET LIGHTING	HUMBERSTON AVENUE	HUMBERSTON	529170.07	404905.72	2017	31/03/2017	51062	1 Urbis LED	Teceo 48 LED 700mA	104 Watts	8.00 Metres	Galvanised Steel	
Y	17	STREET LIGHTING	HUMBERSTON AVENUE	HUMBERSTON	529196.08	404911.41	1983		51063	1 Urbis LED	Teceo 48 LED 700mA	104 Watts	8.00 Metres	Galvanised Steel	
Y	18	STREET LIGHTING	HUMBERSTON AVENUE	HUMBERSTON	529224.18	404916.85	2017	31/03/2017	67785	Urbis	Teceo 48 LED 700mA	104 Watts	8.00 Metres	Galvanised Steel	
Y	19	STREET LIGHTING	HUMBERSTON AVENUE	HUMBERSTON	529255.82	404922.96	1983		51064	1 Urbis LED	Teceo 48 LED 700mA	104 Watts	8.00 Metres	Galvanised Steel	
Y	20	STREET LIGHTING	HUMBERSTON AVENUE	HUMBERSTON	529279.27	404941.51	1983		51065	1 Urbis LED	Teceo 48 LED 700mA	104 Watts	8.00 Metres	Galvanised Steel	
Y	21	STREET LIGHTING	HUMBERSTON AVENUE	HUMBERSTON	529318.01	404934.74	2015	03/11/2015	51066	1 Urbis LED	Teceo 48 LED 700mA	104 Watts	8.00 Metres	Galvanised Steel	
Y	22	STREET LIGHTING	HUMBERSTON AVENUE	HUMBERSTON	529353.57	404956.78	1983		51067	1 Urbis LED	Teceo 48 LED 700mA	104 Watts	8.00 Metres	Galvanised Steel	
Y	23	STREET LIGHTING	HUMBERSTON AVENUE	HUMBERSTON	529391.11	404949.81	2017	31/03/2017	51068	1 Urbis LED	Teceo 48 LED 700mA	104 Watts	8.00 Metres	Galvanised Steel	
Y	24	STREET LIGHTING	HUMBERSTON AVENUE	HUMBERSTON	529431.37	404972.06	1983		51069	1 Urbis LED	Teceo 48 LED 700mA	104 Watts	8.00 Metres	Galvanised Steel	
Y	25	STREET LIGHTING	HUMBERSTON AVENUE	HUMBERSTON	529466.61	404963.98	2017	31/03/2017	67786	Urbis	Teceo 48 LED 700mA	104 Watts	8.00 Metres	Galvanised Steel	
Y	26	STREET LIGHTING	HUMBERSTON AVENUE	HUMBERSTON	529486.89	404968.57	2017	31/03/2017	67787	Urbis	Teceo 48 LED 700mA	104 Watts	8.00 Metres	Galvanised Steel	
Y	27	STREET LIGHTING	HUMBERSTON AVENUE	HUMBERSTON	529507.52	404985.61	1983		51071	1 Urbis LED	Teceo 48 LED 700mA	104 Watts	8.00 Metres	Galvanised Steel	
Y	28	STREET LIGHTING	HUMBERSTON AVENUE	HUMBERSTON	529549.31	404981.88	1983		51072	1 Urbis LED	Teceo 48 LED 700mA	104 Watts	8.00 Metres	Galvanised Steel	
Y	29	STREET LIGHTING	HUMBERSTON AVENUE	HUMBERSTON	529586.39	404988.64	1983		51073	1 Urbis LED	Teceo 48 LED 700mA	104 Watts	8.00 Metres	Galvanised Steel	
Y	30	STREET LIGHTING	HUMBERSTON AVENUE	HUMBERSTON	529627.41	404995.41	1983		51074	1 Urbis LED	Teceo 48 LED 700mA	104 Watts	8.00 Metres	Galvanised Steel	
Y	31	STREET LIGHTING	HUMBERSTON AVENUE	HUMBERSTON	529661.33	405015.85	1983		51075	1 Urbis LED	Teceo 48 LED 700mA	104 Watts	8.00 Metres	Galvanised Steel	
Y	32	STREET LIGHTING	HUMBERSTON AVENUE	HUMBERSTON	529698.33	405009.81	1983		51076	1 Urbis LED	Teceo 48 LED 700mA	104 Watts	8.00 Metres	Galvanised Steel	
Y	33	STREET LIGHTING	HUMBERSTON AVENUE	HUMBERSTON	529733.83	405030.13	1983		51077	1 Urbis LED	Teceo 48 LED 700mA	104 Watts	8.00 Metres	Galvanised Steel	
Y	34	STREET LIGHTING	HUMBERSTON AVENUE	HUMBERSTON	529777.32	405025.52	1983		51078	1 Urbis LED	Teceo 48 LED 700mA	104 Watts	8.00 Metres	Galvanised Steel	
Y	35	STREET LIGHTING	HUMBERSTON AVENUE	HUMBERSTON	529812.88	405033.15	2007		51079	1 Urbis LED	Teceo 48 LED 700mA	104 Watts	8.00 Metres	Steel	
Y	36	STREET LIGHTING	HUMBERSTON AVENUE	HUMBERSTON	529846.49	405038.61	1983		51080	1 Urbis LED	Teceo 48 LED 700mA	104 Watts	8.00 Metres	Galvanised Steel	
Y	37	STREET LIGHTING	HUMBERSTON AVENUE	HUMBERSTON	529884.92	405059.6	2002		51081	1 Urbis LED	Teceo 48 LED 700mA	104 Watts	8.00 Metres	Stainless Steel	
Y	38	STREET LIGHTING	HUMBERSTON AVENUE	HUMBERSTON	529917.41	405052.35	1983		51082	1 Urbis LED	Teceo 48 LED 700mA	104 Watts	8.00 Metres	Galvanised Steel	
Y	39	STREET LIGHTING	HUMBERSTON AVENUE	HUMBERSTON	529951.95	405072.25	1983		51083	1 Urbis LED	Teceo 48 LED 700mA	104 Watts	8.00 Metres	Galvanised Steel	
Y	40	STREET LIGHTING	HUMBERSTON AVENUE	HUMBERSTON	529980.62	405064.82	2022	29/09/2022	69017	Urbis	Teceo 48 LED 700mA	104 Watts	8.00 Metres	Galvanised Steel	
Y	41	STREET LIGHTING	HUMBERSTON AVENUE	HUMBERSTON	530028.08	405087.33	1983		51085	1 Urbis LED	Teceo 48 LED 700mA	104 Watts	8.00 Metres	Galvanised Steel	
Y	42	STREET LIGHTING	HUMBERSTON AVENUE	HUMBERSTON	530068.83	405081.38	1983		51086	1 Urbis LED	Teceo 48 LED 700mA	104 Watts	8.00 Metres	Galvanised Steel	
Y	43	STREET LIGHTING	HUMBERSTON AVENUE	HUMBERSTON	530104.84	405103.13	1983		51087	1 Urbis LED	Teceo 48 LED 700mA	104 Watts	8.00 Metres	Galvanised Steel	
Y	44	STREET LIGHTING	HUMBERSTON AVENUE	HUMBERSTON	530148.29	405097.48	2023	22/09/2023	69302	Urbis	Teceo 48 LED 700mA	104 Watts	8.00 Metres	Galvanised Steel	
Y	45	STREET LIGHTING	HUMBERSTON AVENUE	HUMBERSTON	530176.53	405117.73	1983		51089	1 Urbis LED	Teceo 48 LED 700mA	104 Watts	8.00 Metres	Galvanised Steel	
Y	46	STREET LIGHTING	HUMBERSTON AVENUE	HUMBERSTON	530223.11	405113.23	2017	24/02/2017	51090	1 Urbis LED	Teceo 48 LED 700mA	104 Watts	8.00 Metres	Galvanised Steel	
Y	47	STREET LIGHTING	HUMBERSTON AVENUE	HUMBERSTON	530252.83	405134.14	1983		51091	1 Urbis LED	Teceo 48 LED 700mA	104 Watts	8.00 Metres	Galvanised Steel	
Y	48	STREET LIGHTING	HUMBERSTON AVENUE	HUMBERSTON	530293.36	405128.94	2017	24/02/2017	51092	1 Urbis LED	Teceo 48 LED 700mA	104 Watts	8.00 Metres	Galvanised Steel	
Y	49	STREET LIGHTING	HUMBERSTON AVENUE	HUMBERSTON	530323.72	405149.63	1983		51093	1 Urbis LED	Teceo 48 LED 700mA	104 Watts	8.00 Metres	Galvanised Steel	
Y	50	STREET LIGHTING	HUMBERSTON AVENUE	HUMBERSTON	530362.09	405145.74	2016	08/12/2016	51094	1 Urbis LED	Teceo 48 LED 700mA	104 Watts	8.00 Metres	Galvanised Steel	
Y	51	STREET LIGHTING	HUMBERSTON AVENUE	HUMBERSTON	530395.91	405164.51	1983		51095	1 Urbis LED	Teceo 48 LED 700mA	104 Watts	8.00 Metres	Galvanised Steel	
Y	52	STREET LIGHTING	HUMBERSTON AVENUE	HUMBERSTON	530431.66	405160.81	2016		51096	Urbis	AXIA 3.3 48 LED 540mA	78 Watts	8.00 Metres	Galvanised Steel	
Y	53	STREET LIGHTING	HUMBERSTON AVENUE	HUMBERSTON	530468.93	405180.41	1983		51097	1 Urbis LED	Teceo 48 LED 700mA	104 Watts	8.00 Metres	Galvanised Steel	
Y	54	STREET LIGHTING	HUMBERSTON AVENUE	HUMBERSTON	530508.94	405178.69	2016	08/12/2016	51098	Urbis	AXIA 3.3 48 LED 540mA	78 Watts	8.00 Metres	Galvanised Steel	
Y	55	STREET LIGHTING	HUMBERSTON AVENUE	HUMBERSTON	530551.06	405197.24	1983		51099	1 Urbis LED	Teceo 48 LED 700mA	104 Watts	8.00 Metres	Galvanised Steel	
Y	56	STREET LIGHTING	HUMBERSTON AVENUE	HUMBERSTON	530585.97	405193.97	2016	08/12/2016	51100	1 Urbis LED	Teceo 48 LED 700mA	104 Watts	8.00 Metres	Galvanised Steel	
Y	57	STREET LIGHTING	HUMBERSTON AVENUE	HUMBERSTON	530618.65	405212.05	1983		51101	1 Urbis LED	Teceo 48 LED 700mA	104 Watts	8.00 Metres	Galvanised Steel	
Y	58	STREET LIGHTING	HUMBERSTON AVENUE	HUMBERSTON	530661.46	405209.24	2016	08/12/2016	51102	Urbis	AXIA 3.3 48 LED 540mA	78 Watts	8.00 Metres	Galvanised Steel	
Y	59	STREET LIGHTING	HUMBERSTON AVENUE	HUMBERSTON	530690.02	405227.47	1983		51103	1 Urbis LED	Teceo 48 LED 700mA	104 Watts	8.00 Metres	Galvanised Steel	
Y	60	STREET LIGHTING	HUMBERSTON AVENUE	HUMBERSTON	530727.69	405223.95	2022	29/09/2022	69018	Urbis	Teceo 48 LED 700mA	104 Watts	8.00 Metres	Galvanised Steel	
Y	61	STREET LIGHTING	HUMBERSTON AVENUE	HUMBERSTON	530762.67	405243.23	1983		51105	1 Urbis LED	Teceo 48 LED 700mA	104 Watts	8.00 Metres	Galvanised Steel	
Y	62	STREET LIGHTING	HUMBERSTON AVENUE	HUMBERSTON	530805.28	405241.35	2015	03/11/2015	51106	1 Urbis LED	Teceo 48 LED 700mA	104 Watts	8.00 Metres	Galvanised Steel	
Y	63	STREET LIGHTING	HUMBERSTON AVENUE	HUMBERSTON	530841.98	405260.4	1983		51107	1 Urbis LED	Teceo 48 LED 700mA	104 Watts	8.00 Metres	Galvanised Steel	
Y	64	STREET LIGHTING	HUMBERSTON AVENUE	HUMBERSTON	530866.72	405251.54	1983		51108	1 Urbis LED	Teceo 48 LED 700mA	104 Watts	8.00 Metres	Galvanised Steel	
Y	65	STREET LIGHTING	HUMBERSTON AVENUE	HUMBERSTON	530894.87	405272.1	1998		51109	1 Urbis LED	Teceo 48 LED 700mA	104 Watts	10.00 Metres	Galvanised Steel	
Y	66	STREET LIGHTING	HUMBERSTON AVENUE	HUMBERSTON	530927.2	405265.05	2021	29/03/2021	68416	Urbis	Teceo 48 LED 700mA	104 Watts	12.00 Metres	Galvanised Steel	
Y	67	STREET LIGHTING	HUMBERSTON AVENUE	HUMBERSTON	530911.31	405253.75	1998		66808	1 Urbis LED	Teceo 48 LED 700mA	104 Watts	10.00 Metres	Steel	
Y	1	STREET LIGHTING	WYNDHAM ROAD	NEW WALTHAM	528243.07	404844.11	1989		61326	Urbis	Axia 16 LED 350mA	19 Watts	5.00 Metres	Galvanised Steel	
Y	2	STREET LIGHTING	WYNDHAM ROAD	NEW WALTHAM	528257.25	404817.97	1989		61327	Urbis	Axia 16 LED 350mA	19 Watts	5.00 Metres	Galvanised Steel	
Y	3	STREET LIGHTING	WYNDHAM ROAD	NEW WALTHAM	528268.13	404809.94	1989		61328	Urbis	Axia 16 LED 350mA	19 Watts	5.00 Metres	Galvanised Steel	
Y	4	STREET LIGHTING	WYNDHAM ROAD	NEW WALTHAM	528267.88	404786.46	1989		61329	Urbis	Axia 16 LED 350mA	19 Watts	5.00 Metres	Galvanised Steel	
Y	1	STREET LIGHTING	ALTYRE WAY	HUMBERSTON	529321.59	406452.31	1992		43109	1 Urbis LED	Teceo 24 LED 500mA	40 Watts	8.00 Metres	Galvanised Steel	
Y	2	STREET LIGHTING	ALTYRE WAY	HUMBERSTON	529331.5	406421.98	1992		43110	1 Urbis LED	Teceo 24 LED 500mA	40 Watts	8.00 Metres	Galvanised Steel	
Y	3	STREET LIGHTING	ALTYRE WAY	HUMBERSTON	529362.02	406426.59	1992		43111	1 Urbis LED	Teceo 24 LED 500mA	40 Watts	8.00 Metres	Galvanised Steel	
Y	4	STREET LIGHTING	ALTYRE WAY	HUMBERSTON	529393.69	406429.47	2009		43112	1 Urbis LED	Teceo 24 LED 500mA	40 Watts	8.00 Metres	Steel	
Y	5	STREET LIGHTING	ALTYRE WAY	HUMBERSTON	529422.48	406435.22	1992		43113	1 Urbis LED	Teceo 24 LED 500mA	40 Watts	8.00 Metres	Galvanised Steel	
Y	6	STREET LIGHTING	ALTYRE WAY	HUMBERSTON	529443.79	406412.19	1992		43114	1 Urbis LED	Teceo 24 LED 500mA	40 Watts	8.00 Metres	Galvanised Steel	
Y	7	STREET LIGHTING	ALTYRE WAY	HUMBERSTON	529457.03	406385.7	1992		43115	1 Urbis LED	Teceo 24 LED 500mA	40 Watts	8.00 Metres	Galvanised Steel	
Y	8	STREET LIGHTING	ALTYRE WAY	HUMBERSTON	529473.15	406365.55	2008		43116	1 Urbis LED	Teceo 24 LED 500mA	40 Watts	8.00 Metres	Steel	
Y	9	STREET LIGHTING	ALTYRE WAY	HUMBERSTON	529488.7	406335.03	2008		43117	1 Urbis LED	Teceo 24 LED 500mA	40 Watts	8.00 Metres	Steel	
Y	10	STREET LIGHTING	ALTYRE WAY	HUMBERSTON	529497.34	406302.78	2008		43118	1 Urbis LED	Teceo 24 LED 500mA	40 Watts	8.00 Metres	Steel	
Y	11	STREET LIGHTING	ALTYRE WAY	HUMBERSTON	529522.1	406282.05	2008		43119	1 Urbis LED	Teceo 24 LED 500mA	40 Watts	8.00 Metres	Steel	
Y	12	STREET LIGHTING	ALTYRE WAY	HUMBERSTON	529540.52	406255.57	2008		43120	1 Urbis LED	Teceo 24 LED 500mA	40 Watts	8.00 Metres	Steel	
Y	13	STREET LIGHTING	ALTYRE WAY	HUMBERSTON	529384.23	406448.44	2008		62990	1 Urbis LED	Teceo 24 LED 500mA	40 Watts	8.00 Metres	Steel	
Y	14	STREET LIGHTING	ALTYRE WAY	HUMBERSTON	529391.39	406469.77	2008		62991	1 Urbis LED	Teceo 24 LED 500mA	40 Watts	8.00 Metres	Steel	
Y	1	STREET LIGHTING	SYDNEY TAYLOR WALK	NEW WALTHAM	528524.71	405278.97	1997		57199	Urbis	Axia 16 LED 350mA	19 Watts	5.00 Metres	Galvanised Steel	
Y	2	STREET LIGHTING	SYDNEY TAYLOR WALK	NEW WALTHAM	528529.27	405262.39	1965		57200	Urbis	Axia 16 LED 350mA	19 Watts	5.00 Metres	Galvanised Steel	
Y	3	STREET LIGHTING	SYDNEY TAYLOR WALK	NEW WALTHAM	528550.54	405273.34	2013		57201	Urbis	Axia 16 LED 350mA	19 Watts	6.00 Metres	Steel	
Y	4	STREET LIGHTING	SYDNEY TAYLOR WALK	NEW WALTHAM	528575.85	405287.45	2013		57202	Urbis	Axia 16 LED 350mA	19 Watts	6.00 Metres	Galvanised Steel	
Y	5	STREET LIGHTING	SYDNEY TAYLOR WALK	NEW WALTHAM	528579.4	405299.22	2013		57203	Urbis	Axia 16 LED 350mA	19 Watts	6.00 Metres	Galvanised Steel	
Y	1	STREET LIGHTING	GRANGE FARM LANE	HUMBERSTON	528948.05	404890.42	1995		49426	Urbis	Axia 16 LED 350mA	19 Watts	5.00 Metres	Galvanised Steel	
Y	2	STREET LIGHTING	GRANGE FARM LANE	HUMBERSTON	528941.88	404910.61	1995		49427	Urbis	Axia 16 LED 350mA	19 Watts	5.00 Metres	Galvanised Steel	
Y	3	STREET LIGHTING	GRANGE FARM LANE	HUMBERSTON	528930.99	404935.99	1995		49428	Urbis	Axia 16 LED 350mA	19 Watts	5.00 Metres	Galvanised Steel	
Y	4	STREET LIGHTING	GRANGE FARM LANE	HUMBERSTON	528917.96	404960.35	1995		49429	Urbis	Axia 16 LED 350mA	19 Watts	5.00 Metres	Galvanised Steel	
Y	5	STREET LIGHTING	GRANGE FARM LANE	HUMBERSTON	528926.44	404986.18	1995		49430	Urbis	Axia 16 LED 350mA	19 Watts	5.00 Metres	Galvanised Steel	
Y	6	STREET LIGHTING	GRANGE FARM LANE	HUMBERSTON	528929.47	405005.99	1995		49431	Urbis	Axia 16 LED 350mA	19 Watts	5.00 Metres	Galvanised Steel	
Y	7	STREET LIGHTING	GRANGE FARM LANE	HUMBERSTON	528913.02	405015.1	1995		49432	Urbis	Axia 16 LED 350mA	19 Watts	5.00 Metres	Galvanised Steel	
Y	1	STREET LIGHTING	SHAFTESBURY MEWS	NEW WALTHAM	528125.28	404895.82	1984		57086	Urbis	Axia 16 LED 350mA	19 Watts	5.00 Metres	Galvanised Steel	
Y	2	STREET LIGHTING	SHAFTESBURY MEWS	NEW WALTHAM	528136.29	404881.21	1984		57087	Urbis	Axia 16 LED 350mA	19 Watts	5.00 Metres	Galvanised Steel	
Y	3	STREET LIGHTING	SHAFTESBURY MEWS	NEW WALTHAM	528139.58	404865.07	1984		57088	Urbis	Axia 16 LED 350mA	19 Watts	5.00 Metres	Galvanised Steel	
Y	1	STREET LIGHTING	ADELPHI COURT	NEW WALTHAM	528219.06	404933.91	1994		42745	1 Urbis LED	Teceo 16 LED 500mA	28 Watts	5.00 Metres	Galvanised Steel	
Y	2	STREET LIGHTING	ADELPHI COURT	NEW WALTHAM	528225.01	404918.4	1994		42746	1 Urbis LED	Teceo 16 LED 500mA	28 Watts	5.00 Metres	Galvanised Steel	
Y	1	STREET LIGHTING	LOUTH ROAD ROUNDABOUT	NEW WALTHAM	527592.07	404910.21	1997		52923	1 Urbis LED	Teceo 48 LED 700mA	104 Watts	12.00 Metres	Galvanised Steel	
Y	2	STREET LIGHTING	LOUTH ROAD ROUNDABOUT	NEW WALTHAM	527614.83	404897.02	1997		52924	1 Urbis LED	Teceo 48 LED 700mA	104 Watts	12.00 Metres	Galvanised Steel	
Y	3	STREET LIGHTING	LOUTH ROAD ROUNDABOUT	NEW WALTHAM	527615.89	404873.35	2018	11/06/2018	68154	1 Urbis LED	Teceo 48 LED 700mA	104 Watts	12.00 Metres	Galvanised Steel	
Y	4	STREET LIGHTING	LOUTH ROAD ROUNDABOUT	NEW WALTHAM	527590.83	404854.41	1997		52926	1 Urbis LED	Teceo 48 LED 700mA	104 Watts	12.00 Metres	Galvanised Steel	
Y	5	STREET LIGHTING	LOUTH ROAD ROUNDABOUT	NEW WALTHAM	527569.21	404860.52	1997		52927	1 Urbis LED	Teceo 48 LED 700mA	104 Watts	12.00 Metres	Galvanised Steel	
Y	6	STREET LIGHTING	LOUTH ROAD ROUNDABOUT	NEW WALTHAM	527560.73	404884.25	1997		52928	1 Urbis LED	Teceo 48 LED 700mA	104 Watts	12.00 Metres	Galvanised Steel	
Y	7	STREET LIGHTING	LOUTH ROAD ROUNDABOUT	NEW WALTHAM	527570.43	404903.84	2007		52929	1 Urbis LED	Teceo 48 LED 700mA	104 Watts	12.00 Metres	Stainless Steel	
Y	1	STREET LIGHTING	LOUTH ROAD CYCLEWAY FOOTWAY	NEW WALTHAM	527372.4	405018.23	1998		52905	Urbis	Axia 16 LED 350mA	19 Watts	6.00 Metres	Galvanised Steel	
Y	2	STREET LIGHTING	LOUTH ROAD CYCLEWAY FOOTWAY	NEW WALTHAM	527383	405000.68	1998		52906	Urbis	Axia 16 LED 350mA	19 Watts	6.00 Metres	Galvanised Steel	
Y	3	STREET LIGHTING	LOUTH ROAD CYCLEWAY FOOTWAY	NEW WALTHAM	527395.03	404980.99	1998		52907	Urbis	Axia 16 LED 350mA	19 Watts	6.00 Metres	Galvanised Steel	
Y	4	STREET LIGHTING	LOUTH ROAD CYCLEWAY FOOTWAY	NEW WALTHAM	527406.8	404961.18	1998		52908	Urbis	Axia 16 LED 350mA	19 Watts	6.00 Metres	Galvanised Steel	
Y	5	STREET LIGHTING	LOUTH ROAD CYCLEWAY FOOTWAY	NEW WALTHAM	527418.82	404941.63	1998		52909	Urbis	Axia 16 LED 350mA	19 Watts	6.00 Metres	Galvanised Steel	
Y	6	STREET LIGHTING	LOUTH ROAD CYCLEWAY FOOTWAY	NEW WALTHAM	527430.72	404922.07	1998		52910	Urbis	Axia 16 LED 350mA	19 Watts	6.00 Metres	Galvanised Steel	
Y	7	STREET LIGHTING	LOUTH ROAD CYCLEWAY FOOTWAY	NEW WALTHAM	527442.62	404902.26	1998		52911	Urbis	Axia 16 LED 350mA	19 Watts	6.00 Metres	Galvanised Steel	
Y	8	STREET LIGHTING	LOUTH ROAD CYCLEWAY FOOTWAY	NEW WALTHAM	527454.52	404882.71	1998		52912	Urbis	Axia 16 LED 350mA	19 Watts	6.00 Metres	Galvanised Steel	
Y	9	STREET LIGHTING	LOUTH ROAD CYCLEWAY FOOTWAY	NEW WALTHAM	527466.8	404863.27	1998		52913	Urbis	Axia 16 LED 350mA	19 Watts	6.00 Metres	Galvanised Steel	

Y	10	STREET LIGHTING	LOUTH ROAD CYCLEWAY FOOTWAY	NEW WALTHAM	527478.82	404843.59	1998		52914	Urbis	Axia 16 LED 350mA	19 Watts	6.00 Metres	Galvanised Steel	
Y	11	STREET LIGHTING	LOUTH ROAD CYCLEWAY FOOTWAY	NEW WALTHAM	527490.85	404824.67	1998		52915	Urbis	Axia 16 LED 350mA	19 Watts	6.00 Metres	Galvanised Steel	
Y	12	STREET LIGHTING	LOUTH ROAD CYCLEWAY FOOTWAY	NEW WALTHAM	527503.15	404805.1	1998		52916	Urbis	Axia 16 LED 350mA	19 Watts	6.00 Metres	Galvanised Steel	
Y	13	STREET LIGHTING	LOUTH ROAD CYCLEWAY FOOTWAY	NEW WALTHAM	527514.89	404785.48	1998		52917	Urbis	Axia 16 LED 350mA	19 Watts	6.00 Metres	Galvanised Steel	
Y	14	STREET LIGHTING	LOUTH ROAD CYCLEWAY FOOTWAY	NEW WALTHAM	527526.41	404765.93	1998		52918	Urbis	Axia 16 LED 350mA	19 Watts	6.00 Metres	Galvanised Steel	
Y	15	STREET LIGHTING	LOUTH ROAD CYCLEWAY FOOTWAY	NEW WALTHAM	527538.31	404746.75	1998		52919	Urbis	Axia 16 LED 350mA	19 Watts	6.00 Metres	Galvanised Steel	
Y	16	STREET LIGHTING	LOUTH ROAD CYCLEWAY FOOTWAY	NEW WALTHAM	527550.08	404727.07	1998		52920	Urbis	Axia 16 LED 350mA	19 Watts	6.00 Metres	Galvanised Steel	
Y	17	STREET LIGHTING	LOUTH ROAD CYCLEWAY FOOTWAY	NEW WALTHAM	527561.98	404707.64	1998		52921	Urbis	Axia 16 LED 350mA	19 Watts	6.00 Metres	Galvanised Steel	
Y	18	STREET LIGHTING	LOUTH ROAD CYCLEWAY FOOTWAY	NEW WALTHAM	527574.64	404687.58	1998		52922	Urbis	Axia 16 LED 350mA	19 Watts	6.00 Metres	Galvanised Steel	
Y	1	STREET LIGHTING	LOW FARM ROUNDABOUT	NEW WALTHAM	528203.31	405808.21	1997		52955	1 Urbis LED	Teceo 48 LED 700mA	104 Watts	12.00 Metres	Galvanised Steel	
Y	2	STREET LIGHTING	LOW FARM ROUNDABOUT	NEW WALTHAM	528219.11	405786.74	1997		52956	1 Urbis LED	Teceo 48 LED 700mA	104 Watts	12.00 Metres	Galvanised Steel	
Y	3	STREET LIGHTING	LOW FARM ROUNDABOUT	NEW WALTHAM	528218.3	405760.11	2004		52957	1 Urbis LED	Teceo 48 LED 700mA	104 Watts	12.00 Metres	Stainless Steel	
Y	4	STREET LIGHTING	LOW FARM ROUNDABOUT	NEW WALTHAM	528189.54	405746.74	1997		52958	1 Urbis LED	Teceo 48 LED 700mA	104 Watts	12.00 Metres	Galvanised Steel	
Y	5	STREET LIGHTING	LOW FARM ROUNDABOUT	NEW WALTHAM	528165.64	405755.35	1997		52959	1 Urbis LED	Teceo 48 LED 700mA	104 Watts	12.00 Metres	Galvanised Steel	
Y	6	STREET LIGHTING	LOW FARM ROUNDABOUT	NEW WALTHAM	528155.11	405774.39	1997		52960	1 Urbis LED	Teceo 48 LED 700mA	104 Watts	12.00 Metres	Stainless Steel	
Y	7	STREET LIGHTING	LOW FARM ROUNDABOUT	NEW WALTHAM	528158.72	405794.45	2016	29/02/2016	68978	1 Urbis LED	Teceo 48 LED 700mA	104 Watts	10.00 Metres	Galvanised Steel	
Y	8	STREET LIGHTING	LOW FARM ROUNDABOUT	NEW WALTHAM	528178.76	405812.01			69793	Urbis	Teceo 48 LED 700mA	104 Watts			
Y	1	STREET LIGHTING	BARNET DRIVE	NEW WALTHAM	528984.8	405394.03	1997		43706	Urbis	Axia 16 LED 350mA	19 Watts	5.00 Metres	Galvanised Steel	
Y	2	STREET LIGHTING	BARNET DRIVE	NEW WALTHAM	529003.08	405418.32	1997		43707	Urbis	Axia 16 LED 350mA	19 Watts	5.00 Metres	Galvanised Steel	
Y	3	STREET LIGHTING	BARNET DRIVE	NEW WALTHAM	529000.93	405447.75	1997		43708	Urbis	Axia 16 LED 350mA	19 Watts	5.00 Metres	Galvanised Steel	
Y	4	STREET LIGHTING	BARNET DRIVE	NEW WALTHAM	528974.86	405449.59	1997		43709	Urbis	Axia 16 LED 350mA	19 Watts	5.00 Metres	Galvanised Steel	
Y	5	STREET LIGHTING	BARNET DRIVE	NEW WALTHAM	528952.83	405465.6	1997		43710	Urbis	Axia 16 LED 350mA	19 Watts	5.00 Metres	Galvanised Steel	
Y	6	STREET LIGHTING	BARNET DRIVE	NEW WALTHAM	528938.48	405446.14	1997		43711	Urbis	Axia 16 LED 350mA	19 Watts	5.00 Metres	Galvanised Steel	
Y	7	STREET LIGHTING	BARNET DRIVE	NEW WALTHAM	528926.96	405469.49	1997		43712	Urbis	Axia 16 LED 350mA	19 Watts	5.00 Metres	Galvanised Steel	
Y	1	STREET LIGHTING	JOSEPH OGLE CLOSE	NEW WALTHAM	528012.57	405097.04	1999		51452	Urbis	Axia 16 LED 350mA	19 Watts	5.00 Metres	Galvanised Steel	
Y	2	STREET LIGHTING	JOSEPH OGLE CLOSE	NEW WALTHAM	527984.85	405084.44	1999		51453	Urbis	Axia 16 LED 350mA	19 Watts	5.00 Metres	Galvanised Steel	
Y	3	STREET LIGHTING	JOSEPH OGLE CLOSE	NEW WALTHAM	527961.31	405078.05	1999		51454	Urbis	Axia 16 LED 350mA	19 Watts	5.00 Metres	Galvanised Steel	
Y	1	STREET LIGHTING	ELLEN WAY	NEW WALTHAM	527993.63	405145.12	1999		47914	Urbis	Teceo 16 LED 500mA	28 Watts	5.00 Metres	Galvanised Steel	
Y	2	STREET LIGHTING	ELLEN WAY	NEW WALTHAM	527971.2	405152.31	1999		47915	Urbis	Teceo 16 LED 500mA	28 Watts	5.00 Metres	Galvanised Steel	
Y	3	STREET LIGHTING	ELLEN WAY	NEW WALTHAM	527947.16	405149.03	1999		47916	Urbis	Teceo 16 LED 500mA	28 Watts	5.00 Metres	Galvanised Steel	
Y	4	STREET LIGHTING	ELLEN WAY	NEW WALTHAM	527926.93	405127.22	1999		47917	Urbis	Teceo 16 LED 500mA	28 Watts	5.00 Metres	Galvanised Steel	
Y	5	STREET LIGHTING	ELLEN WAY	NEW WALTHAM	527901.21	405123.43	1999		67273	Urbis	Teceo 16 LED 500mA	28 Watts	5.00 Metres	Galvanised Steel	
Y	1	STREET LIGHTING	LAVENDER GROVE	NEW WALTHAM	527984.28	405245.28	2001		52385	Urbis	Axia 16 LED 350mA	19 Watts	5.00 Metres	Galvanised Steel	
Y	2	STREET LIGHTING	LAVENDER GROVE	NEW WALTHAM	528005.9	405241.06	2001		52386	Urbis	Axia 16 LED 350mA	19 Watts	5.00 Metres	Galvanised Steel	
Y	3	STREET LIGHTING	LAVENDER GROVE	NEW WALTHAM	528022.51	405243.79	2001		52387	Urbis	Axia 16 LED 350mA	19 Watts	5.00 Metres	Galvanised Steel	
Y	1	STREET LIGHTING	ST CLEMENTS WAY	NEW WALTHAM	528032.5	405138.99	2000		57644	Urbis	Axia 16 LED 350mA	19 Watts	5.00 Metres	Galvanised Steel	
Y	2	STREET LIGHTING	ST CLEMENTS WAY	NEW WALTHAM	528056.2	405141.07	2000		57645	Urbis	Axia 16 LED 350mA	19 Watts	5.00 Metres	Galvanised Steel	
Y	3	STREET LIGHTING	ST CLEMENTS WAY	NEW WALTHAM	528065.21	405159.85	2000		57646	Urbis	Axia 16 LED 350mA	19 Watts	5.00 Metres	Galvanised Steel	
Y	4	STREET LIGHTING	ST CLEMENTS WAY	NEW WALTHAM	528083.62	405174.7	2000		57647	Urbis	Axia 16 LED 350mA	19 Watts	5.00 Metres	Galvanised Steel	
Y	5	STREET LIGHTING	ST CLEMENTS WAY	NEW WALTHAM	528104.3	405171	2000		57648	Urbis	Axia 16 LED 350mA	19 Watts	5.00 Metres	Galvanised Steel	
Y	6	STREET LIGHTING	ST CLEMENTS WAY	NEW WALTHAM	528135.37	405170.06	2001		57649	Urbis	Axia 16 LED 350mA	19 Watts	5.00 Metres	Galvanised Steel	
Y	7	STREET LIGHTING	ST CLEMENTS WAY	NEW WALTHAM	528155	405191.74	1999		57650	Urbis	Axia 16 LED 350mA	19 Watts	5.00 Metres	Galvanised Steel	
Y	8	STREET LIGHTING	ST CLEMENTS WAY	NEW WALTHAM	528179.18	405193.83	1999		57651	Urbis	Axia 16 LED 350mA	19 Watts	5.00 Metres	Galvanised Steel	
Y	9	STREET LIGHTING	ST CLEMENTS WAY	NEW WALTHAM	528194.61	405212.86	1999		57652	Urbis	Axia 16 LED 350mA	19 Watts	5.00 Metres	Galvanised Steel	
Y	10	STREET LIGHTING	ST CLEMENTS WAY	NEW WALTHAM	528208.22	405230.57	2002		57653	Urbis	Axia 16 LED 350mA	19 Watts	5.00 Metres	Galvanised Steel	
Y	11	STREET LIGHTING	ST CLEMENTS WAY	NEW WALTHAM	528229.77	405250.7	2002		57654	Urbis	Axia 16 LED 350mA	19 Watts	5.00 Metres	Galvanised Steel	
Y	12	STREET LIGHTING	ST CLEMENTS WAY	NEW WALTHAM	528241.73	405282.62	2002		57655	Urbis	Axia 16 LED 350mA	19 Watts	5.00 Metres	Galvanised Steel	
Y	13	STREET LIGHTING	ST CLEMENTS WAY	NEW WALTHAM	528254.51	405312.24	2002		57656	Urbis	Axia 16 LED 350mA	19 Watts	5.00 Metres	Galvanised Steel	
Y	14	STREET LIGHTING	ST CLEMENTS WAY	NEW WALTHAM	528240.97	405329.86	2002		57657	Urbis	Axia 16 LED 350mA	19 Watts	5.00 Metres	Galvanised Steel	
Y	15	STREET LIGHTING	ST CLEMENTS WAY	NEW WALTHAM	528242.7	405347.54	2002		57658	Urbis	Axia 16 LED 350mA	19 Watts	5.00 Metres	Galvanised Steel	
Y	16	STREET LIGHTING	ST CLEMENTS WAY	NEW WALTHAM	528271.01	405344.19	2002		57660	Urbis	Axia 16 LED 350mA	19 Watts	5.00 Metres	Galvanised Steel	
Y	17	STREET LIGHTING	ST CLEMENTS WAY	NEW WALTHAM	528295.63	405381.09	2023	14/02/2023	69209	Urbis	Axia 16 LED 350mA	19 Watts	6.00 Metres	Galvanised Steel	
Y	1	STREET LIGHTING	PAVILION WAY	NEW WALTHAM	528091.77	405188.27	2001		54806	Urbis	Axia 16 LED 350mA	19 Watts	5.00 Metres	Galvanised Steel	
Y	2	STREET LIGHTING	PAVILION WAY	NEW WALTHAM	528091.28	405212.53	2005		54807	Urbis	Axia 16 LED 350mA	19 Watts	5.00 Metres	Stainless Steel	
Y	3	STREET LIGHTING	PAVILION WAY	NEW WALTHAM	528077.79	405242.59	2001		54808	Urbis	Axia 16 LED 350mA	19 Watts	5.00 Metres	Galvanised Steel	
Y	4	STREET LIGHTING	PAVILION WAY	NEW WALTHAM	528079.36	405266.61	2001		54809	Urbis	Axia 16 LED 350mA	19 Watts	5.00 Metres	Galvanised Steel	
Y	5	STREET LIGHTING	PAVILION WAY	NEW WALTHAM	528061.24	405276.26	2001		54810	Urbis	Axia 16 LED 350mA	19 Watts	5.00 Metres	Galvanised Steel	
Y	1	STREET LIGHTING	ARRAN CLOSE	NEW WALTHAM	528270.58	405281.36	2002		43362	1 Urbis LED	Axia 16 LED 500mA	28 Watts	5.00 Metres	Galvanised Steel	
Y	2	STREET LIGHTING	ARRAN CLOSE	NEW WALTHAM	528281.85	405250.62	2002		43363	1 Urbis LED	Axia 16 LED 500mA	28 Watts	5.00 Metres	Galvanised Steel	
Y	3	STREET LIGHTING	ARRAN CLOSE	NEW WALTHAM	528295.33	405222.1	2007		43364	1 Urbis LED	Axia 16 LED 500mA	28 Watts	6.00 Metres	Galvanised Steel	
Y	1	STREET LIGHTING	COLONSAY COURT	NEW WALTHAM	528231.08	405207.48	2002		46420	Urbis	Axia 16 LED 350mA	19 Watts	5.00 Metres	Galvanised Steel	
Y	2	STREET LIGHTING	COLONSAY COURT	NEW WALTHAM	528249.2	405206.52	2002		46421	Urbis	Axia 16 LED 350mA	19 Watts	5.00 Metres	Galvanised Steel	
Y	1	STREET LIGHTING	HUNTSMANS CHASE	NEW WALTHAM	527953.2	405220.19	2001		51237	Urbis	Axia 16 LED 350mA	19 Watts	5.00 Metres	Galvanised Steel	
Y	2	STREET LIGHTING	HUNTSMANS CHASE	NEW WALTHAM	527928.8	405203.54	2001		51238	Urbis	Axia 16 LED 350mA	19 Watts	5.00 Metres	Galvanised Steel	
Y	1	STREET LIGHTING	ROLADAN CLOSE	NEW WALTHAM	528009.99	405181.15	2000		56224	1 Urbis LED	Axia 16 LED 500mA	28 Watts	5.00 Metres	Galvanised Steel	
Y	2	STREET LIGHTING	ROLADAN CLOSE	NEW WALTHAM	528037.61	405198.62	2000		56225	1 Urbis LED	Axia 16 LED 500mA	28 Watts	5.00 Metres	Galvanised Steel	
Y	1	STREET LIGHTING	STRATHMORE COURT	NEW WALTHAM	528629.88	404340.13	2004		58532	1 Urbis LED	Axia 16 LED 500mA	28 Watts	6.00 Metres	Stainless Steel	
Y	1	STREET LIGHTING	ST CLEMENTS WAY FOOTPATH	NEW WALTHAM	528235.4	405376.69	2003		57661	Urbis	Axia 8 LED 350mA	10 Watts	5.00 Metres	Galvanised Steel	
Y	2	STREET LIGHTING	ST CLEMENTS WAY FOOTPATH	NEW WALTHAM	528256.96	405385.38	2003		57662	Urbis	Axia 8 LED 350mA	10 Watts	5.00 Metres	Galvanised Steel	
Y	3	STREET LIGHTING	ST CLEMENTS WAY FOOTPATH	NEW WALTHAM	528274.88	405404.63	2003		57663	Urbis	Axia 8 LED 350mA	10 Watts	5.00 Metres	Galvanised Steel	
Y	4	STREET LIGHTING	ST CLEMENTS WAY FOOTPATH	NEW WALTHAM	528267.67	405434.28	2003		57664	Urbis	Axia 8 LED 350mA	10 Watts	5.00 Metres	Galvanised Steel	
Y	1	STREET LIGHTING	ASPHODEL CLOSE	NEW WALTHAM	529018.86	405321.73	1995		43459	Urbis	Axia 16 LED 350mA	19 Watts	5.00 Metres	Galvanised Steel	
Y	2	STREET LIGHTING	ASPHODEL CLOSE	NEW WALTHAM	528999.29	405316.28	2021	03/12/2021	68779	Urbis	Axia 16 LED 350mA	19 Watts	6.00 Metres	Galvanised Steel	
Y	3	STREET LIGHTING	ASPHODEL CLOSE	NEW WALTHAM	528974.05	405319.07	1995		43461	Urbis	Axia 16 LED 350mA	19 Watts	5.00 Metres	Galvanised Steel	
Y	4	STREET LIGHTING	ASPHODEL CLOSE	NEW WALTHAM	528954.56	405314.32	1995		43462	Urbis	Axia 16 LED 350mA	19 Watts	5.00 Metres	Galvanised Steel	
Y	1	STREET LIGHTING	BUDE CLOSE	NEW WALTHAM	528251.08	405144.84	1999		44910	Urbis	Axia 16 LED 350mA	19 Watts	5.00 Metres	Galvanised Steel	
Y	2	STREET LIGHTING	BUDE CLOSE	NEW WALTHAM	528281.08	405146.17	1999		44911	Urbis	Axia 16 LED 350mA	19 Watts	5.00 Metres	Galvanised Steel	
Y	3	STREET LIGHTING	BUDE CLOSE	NEW WALTHAM	528295.25	405161.68	1999		44912	Urbis	Axia 16 LED 350mA	19 Watts	5.00 Metres	Galvanised Steel	
Y	4	STREET LIGHTING	BUDE CLOSE	NEW WALTHAM	528314.37	405157.44	1999		44913	Urbis	Axia 16 LED 350mA	19 Watts	5.00 Metres	Galvanised Steel	
Y	1	STREET LIGHTING	CARBIS CLOSE	NEW WALTHAM	528251.08	405030.74	1999		45227	Urbis	Axia 16 LED 350mA	19 Watts	5.00 Metres	Galvanised Steel	
Y	2	STREET LIGHTING	CARBIS CLOSE	NEW WALTHAM	528233.48	405011.88	1999		45228	Urbis	Axia 16 LED 350mA	19 Watts	5.00 Metres	Galvanised Steel	
Y	3	STREET LIGHTING	CARBIS CLOSE	NEW WALTHAM	528216.78	405029.03	1999		45229	Urbis	Axia 16 LED 350mA	19 Watts	5.00 Metres	Galvanised Steel	
Y	1	STREET LIGHTING	CHANDLERS CLOSE	NEW WALTHAM	528077.32	404971.16	1998		45569	Urbis	Axia 16 LED 350mA	19 Watts	5.00 Metres	Galvanised Steel	
Y	2	STREET LIGHTING	CHANDLERS CLOSE	NEW WALTHAM	528050.86	404973.63	1998		45570	Urbis	Axia 16 LED 350mA	19 Watts	5.00 Metres	Galvanised Steel	
Y	3	STREET LIGHTING	CHANDLERS CLOSE	NEW WALTHAM	528030.61	404955.97	1998		45571	Urbis	Axia 16 LED 350mA	19 Watts	5.00 Metres	Galvanised Steel	
Y	4	STREET LIGHTING	CHANDLERS CLOSE	NEW WALTHAM	528004.03	404954.64	1998		45572	Urbis	Axia 16 LED 350mA	19 Watts	5.00 Metres	Galvanised Steel	
Y	1	STREET LIGHTING	FARMHOUSE MEWS	NEW WALTHAM	528340.17	404769.38	1998		48412	Urbis	Axia 16 LED 350mA	19 Watts	5.00 Metres	Galvanised Steel	
Y	2	STREET LIGHTING	FARMHOUSE MEWS	NEW WALTHAM	528313.21	404770.33	1998		48413	Urbis	Axia 16 LED 350mA	19 Watts	5.00 Metres	Galvanised Steel	
Y	3	STREET LIGHTING	FARMHOUSE MEWS	NEW WALTHAM	528288.14	404762.03	1998		48414	Urbis	Axia 16 LED 350mA	19 Watts	5.00 Metres	Galvanised Steel	
Y	4	STREET LIGHTING	FARMHOUSE MEWS	NEW WALTHAM	528275.61	404768.55	1998		48415	Urbis	Axia 16 LED 350mA	19 Watts	5.00 Metres	Galvanised Steel	
Y	5	STREET LIGHTING	FARMHOUSE MEWS	NEW WALTHAM	528277	404736.65	1998		48416	Urbis	Axia 16 LED 350mA	19 Watts	5.00 Metres	Galvanised Steel	
Y	6	STREET LIGHTING	FARMHOUSE MEWS	NEW WALTHAM	528270.04	404699.95	1998		48417	Urbis	Axia 16 LED 350mA	19 Watts	5.00 Metres	Galvanised Steel	
Y	7	STREET LIGHTING	FARMHOUSE MEWS	NEW WALTHAM	528285.61	404713.24	1998		48418	Urbis	Axia 16 LED 350mA	19 Watts	5.00 Metres	Galvanised Steel	
Y	8	STREET LIGHTING	FARMHOUSE MEWS	NEW WALTHAM	528304.47	404718.87	1998		48419	Urbis	Axia 16 LED 350mA	19 Watts	5.00 Metres	Galvanised Steel	
Y	9	STREET LIGHTING	FARMHOUSE MEWS	NEW WALTHAM	528325.48	404718.37	1998		48420	Urbis	Axia 16 LED 350mA	19 Watts	5.00 Metres	Galvanised Steel	
Y	1	STREET LIGHTING	KNIGHTSBRIDGE	NEW WALTHAM	528305.07	404985.88	1989		51928	Urbis	Axia 16 LED 350mA	19 Watts	5.00 Metres	Galvanised Steel	
Y	2	STREET LIGHTING	KNIGHTSBRIDGE	NEW WALTHAM	528332.92	404999.61	1989		51929	Urbis	Axia 16 LED 350mA	19 Watts	5.00 Metres	Galvanised Steel	
Y	3	STREET LIGHTING	KNIGHTSBRIDGE	NEW WALTHAM	528361.52	405009.8	1990		51930	Urbis	Axia 16 LED 350mA	19 Watts	5.00 Metres	Galvanised Steel	
Y	4	STREET LIGHTING	KNIGHTSBRIDGE	NEW WALTHAM	528374.69	405000.12	1990		51931	Urbis	Axia 16 LED 350mA	19 Watts	5.00 Metres	Galvanised Steel	
Y	5	STREET LIGHTING	KNIGHTSBRIDGE	NEW WALTHAM	528374.69	404975.62	1990		51932	Urbis	Axia 16 LED 350mA	19 Watts	5.00 Metres	Galvanised Steel	
Y	1	STREET LIGHTING	ODERIN DRIVE	NEW WALTHAM	529034.48	405343.43	1997		54350	Urbis	Axia 16 LED 350mA	19 Watts	5.00 Metres	Galvanised Steel	
Y	2	STREET LIGHTING	ODERIN DRIVE	NEW WALTHAM	529061.44	405343.11	1997		54351	Urbis	Axia 16 LED 350mA	19 Watts	5.00 Metres	Galvanised Steel	
Y	3	STREET LIGHTING	ODERIN DRIVE	NEW WALTHAM	529076.38	405370.26	1997		54352	Urbis	Axia 16 LED 350mA	19 Watts	5.00 Metres	Galvanised Steel	
Y	4	STREET LIGHTING	ODERIN DRIVE	NEW WALTHAM	529090.56	405394.12	1997		54353	Urbis	Axia 16 LED 350mA	19 Watts	5.00 Metres	Galvanised Steel	
Y	5	STREET LIGHTING	ODERIN DRIVE	NEW WALTHAM	529093.16	405415.87	1997		54354	Urbis	Axia 16 LED 350mA	19 Watts	5.00 Metres	Galvanised Steel	
Y	6	STREET LIGHTING	ODERIN DRIVE	NEW WALTHAM	529078.1	405429.13	1997		54355	Urbis	Axia 16 LED 350mA	19 Watts	5.00 Metres	Galvanised Steel	
Y	7	STREET LIGHTING	ODERIN DRIVE	NEW WALTHAM	529054.43	405436.03	1997		54356	Urbis	Axia 16 LED 350mA	19 Watts	5.00 Metres	Galvanised Steel	
Y	8	STREET LIGHTING	ODERIN DRIVE	NEW WALTHAM	529038.99	405439.89	1997		54357	Urbis	Axia 16 LED 350mA	19 Watts	5.00 Metres	Galvanised Steel	
Y	1	STREET LIGHTING	PENDEEN CLOSE	NEW WALTHAM	528271.84	405088.58	1999		55260	Urbis	Axia 16 LED 350mA	19 Watts	5.00 Metres	Galvanised Steel	
Y	2	STREET LIGHTING	PENDEEN CLOSE	NEW WALTHAM	528299.05	405089.78	1998		55261	Urbis	Axia 16 LED 350mA	19 Watts	5.00 Metres	Galvanised Steel	

Y	3	STREET LIGHTING	PENDEEN CLOSE	NEW WALTHAM	528325.89	405090.48	1998		55262	Urbis	Axia 16 LED 350mA	19 Watts	5.00 Metres	Galvanised Steel	
Y	4	STREET LIGHTING	PENDEEN CLOSE	NEW WALTHAM	528340.06	405064.34	1998		55263	Urbis	Axia 16 LED 350mA	19 Watts	5.00 Metres	Galvanised Steel	
Y	1	STREET LIGHTING	TINTAGEL WAY	NEW WALTHAM	528275.49	404983.83	1996		59225	Urbis	Axia 16 LED 350mA	19 Watts	5.00 Metres	Galvanised Steel	
Y	2	STREET LIGHTING	TINTAGEL WAY	NEW WALTHAM	528266.39	405010.79	1996		59226	Urbis	Axia 16 LED 350mA	19 Watts	5.00 Metres	Galvanised Steel	
Y	3	STREET LIGHTING	TINTAGEL WAY	NEW WALTHAM	528267.9	405035.92	1999		59227	Urbis	Axia 16 LED 350mA	19 Watts	5.00 Metres	Galvanised Steel	
Y	4	STREET LIGHTING	TINTAGEL WAY	NEW WALTHAM	528251.31	405054.93	1999		59228	Urbis	Axia 16 LED 350mA	19 Watts	5.00 Metres	Galvanised Steel	
Y	5	STREET LIGHTING	TINTAGEL WAY	NEW WALTHAM	528264.11	405068.45	1998		59229	Urbis	Axia 16 LED 350mA	19 Watts	5.00 Metres	Galvanised Steel	
Y	6	STREET LIGHTING	TINTAGEL WAY	NEW WALTHAM	528253.35	405089.9	1999		59230	Urbis	Axia 16 LED 350mA	19 Watts	5.00 Metres	Galvanised Steel	
Y	7	STREET LIGHTING	TINTAGEL WAY	NEW WALTHAM	528252.59	405110.85	1999		59231	Urbis	Axia 16 LED 350mA	19 Watts	5.00 Metres	Galvanised Steel	
Y	8	STREET LIGHTING	TINTAGEL WAY	NEW WALTHAM	528239.93	405125.98	1999		59232	Urbis	Axia 16 LED 350mA	19 Watts	5.00 Metres	Galvanised Steel	
Y	9	STREET LIGHTING	TINTAGEL WAY	NEW WALTHAM	528220.06	405143.13	1999		59233	Urbis	Axia 16 LED 350mA	19 Watts	5.00 Metres	Galvanised Steel	
Y	10	STREET LIGHTING	TINTAGEL WAY	NEW WALTHAM	528195.12	405134.71	1999		59234	Urbis	Axia 16 LED 350mA	19 Watts	5.00 Metres	Galvanised Steel	
Y	11	STREET LIGHTING	TINTAGEL WAY	NEW WALTHAM	528179.68	405143.89	1999		59235	Urbis	Axia 16 LED 350mA	19 Watts	5.00 Metres	Galvanised Steel	
Y	12	STREET LIGHTING	TINTAGEL WAY	NEW WALTHAM	528151.5	405147.08	2001		59236	Urbis	Axia 16 LED 350mA	19 Watts	5.00 Metres	Galvanised Steel	
Y	13	STREET LIGHTING	TINTAGEL WAY	NEW WALTHAM	528151.96	405168.13	1999		59237	Urbis	Axia 16 LED 350mA	19 Watts	5.00 Metres	Galvanised Steel	
Y	1	STREET LIGHTING	NEWLYN CLOSE	NEW WALTHAM	528170.11	405124.03	2000		54133	Urbis	Axia 16 LED 350mA	19 Watts	5.00 Metres	Galvanised Steel	
Y	2	STREET LIGHTING	NEWLYN CLOSE	NEW WALTHAM	528160.46	405103.34	2000		54134	Urbis	Axia 16 LED 350mA	19 Watts	5.00 Metres	Galvanised Steel	
Y	3	STREET LIGHTING	NEWLYN CLOSE	NEW WALTHAM	528179.73	405083.1	2000		54135	Urbis	Axia 16 LED 350mA	19 Watts	5.00 Metres	Galvanised Steel	
Y	4	STREET LIGHTING	NEWLYN CLOSE	NEW WALTHAM	528192.96	405073.54	2000		54136	Urbis	Axia 16 LED 350mA	19 Watts	5.00 Metres	Galvanised Steel	
Y	1	STREET LIGHTING	MARTIN WAY	NEW WALTHAM	528044.47	405030.39	1998		53402	Urbis	Axia 16 LED 350mA	19 Watts	5.00 Metres	Galvanised Steel	
Y	2	STREET LIGHTING	MARTIN WAY	NEW WALTHAM	528017	405034.51	1998		53403	Urbis	Axia 16 LED 350mA	19 Watts	5.00 Metres	Galvanised Steel	
Y	3	STREET LIGHTING	MARTIN WAY	NEW WALTHAM	527992.45	405013.69	1998		53404	Urbis	Axia 16 LED 350mA	19 Watts	5.00 Metres	Galvanised Steel	
Y	4	STREET LIGHTING	MARTIN WAY	NEW WALTHAM	527968.14	405016.16	1998		53405	Urbis	Axia 16 LED 350mA	19 Watts	5.00 Metres	Galvanised Steel	
Y	1	STREET LIGHTING	PETERSON DRIVE	NEW WALTHAM			2020	05/10/2020	68322	Urbis	AXIA 16 LED 390mA	21 Watts	6.00 Metres	Galvanised Steel	
Y	1	STREET LIGHTING	COUNTESS CLOSE	NEW WALTHAM	528610.86	404929.85	2007		46816	1 Urbis LED	Axia 16 LED 500mA	28 Watts	5.00 Metres	Stainless Steel	
Y	2	STREET LIGHTING	COUNTESS CLOSE	NEW WALTHAM	528593.63	404927.59	2007		46817	1 Urbis LED	Axia 16 LED 500mA	28 Watts	5.00 Metres	Stainless Steel	
Y	3	STREET LIGHTING	COUNTESS CLOSE	NEW WALTHAM	528562.04	404912.58	2007		46818	1 Urbis LED	Axia 16 LED 500mA	28 Watts	5.00 Metres	Stainless Steel	
Y	4	STREET LIGHTING	COUNTESS CLOSE	NEW WALTHAM	528560.62	404895.66	2007		46819	1 Urbis LED	Axia 16 LED 500mA	28 Watts	5.00 Metres	Stainless Steel	
Y	5	STREET LIGHTING	COUNTESS CLOSE	NEW WALTHAM	528564.29	404873.85	2007		46820	1 Urbis LED	Axia 16 LED 500mA	28 Watts	5.00 Metres	Stainless Steel	
Y	1	STREET LIGHTING	ST HELENS CRESCENT	BRIGSLEY	525480.99	402166.54	2011		57696	1 Urbis LED	Axia 16 LED 500mA	28 Watts	6.00 Metres	Steel	
Y	2	STREET LIGHTING	ST HELENS CRESCENT	BRIGSLEY	525517.15	402161.35	2011		57697	1 Urbis LED	Axia 16 LED 500mA	28 Watts	6.00 Metres	Steel	
Y	3	STREET LIGHTING	ST HELENS CRESCENT	BRIGSLEY	525532.05	402115.21	2011		57698	1 Urbis LED	Axia 16 LED 500mA	28 Watts	6.00 Metres	Steel	
Y	4	STREET LIGHTING	ST HELENS CRESCENT	BRIGSLEY	525543.46	402137.44	2011		57699	1 Urbis LED	Axia 16 LED 500mA	28 Watts	6.00 Metres	Steel	
Y	5	STREET LIGHTING	ST HELENS CRESCENT	BRIGSLEY	525546.39	402162.23	2011		57700	1 Urbis LED	Axia 16 LED 500mA	28 Watts	6.00 Metres	Steel	
Y	6	STREET LIGHTING	ST HELENS CRESCENT	BRIGSLEY	525544.43	402198.91	2011		57701	1 Urbis LED	Axia 16 LED 500mA	28 Watts	6.00 Metres	Steel	
Y	7	STREET LIGHTING	ST HELENS CRESCENT	BRIGSLEY	525556.72	402224.24	2011		57702	1 Urbis LED	Axia 16 LED 500mA	28 Watts	6.00 Metres	Steel	
Y	8	STREET LIGHTING	ST HELENS CRESCENT	BRIGSLEY	525561.66	402255.25	2011		57703	1 Urbis LED	Axia 16 LED 500mA	28 Watts	6.00 Metres	Steel	
Y	1	STREET LIGHTING	ASHBY HILL	ASHBY CUM FENBY	524202.69	400637.83	1998		43409	1 Urbis LED	Teceo 48 LED 700mA	104 Watts	10.00 Metres	Galvanised Steel	
Y	2	STREET LIGHTING	ASHBY HILL	ASHBY CUM FENBY	524239.4	400658.44	1998		43410	1 Urbis LED	Teceo 48 LED 700mA	104 Watts	10.00 Metres	Galvanised Steel	
Y	3	STREET LIGHTING	ASHBY HILL	ASHBY CUM FENBY	524267.64	400685.97	1998		43411	1 Urbis LED	Teceo 48 LED 700mA	104 Watts	10.00 Metres	Galvanised Steel	
Y	1	STREET LIGHTING	IMMINGHAM ROAD	STALLINGBOROUGH	519608.51	411297.59	2017		51278	1 Urbis LED	Teceo 40 LED 500mA	64 Watts	10.00 Metres	Galvanised Steel	
Y	2	STREET LIGHTING	IMMINGHAM ROAD	STALLINGBOROUGH	519599.02	411317.34	2017		51279	1 Urbis LED	Teceo 40 LED 500mA	64 Watts	10.00 Metres	Galvanised Steel	
Y	3	STREET LIGHTING	IMMINGHAM ROAD	STALLINGBOROUGH	519578.64	411307.08	2017		51280	1 Urbis LED	Teceo 40 LED 500mA	64 Watts	10.00 Metres	Galvanised Steel	
Y	4	STREET LIGHTING	IMMINGHAM ROAD	STALLINGBOROUGH	519569.9	411329.74	2017		51281	1 Urbis LED	Teceo 48 LED 700mA	104 Watts	10.00 Metres	Galvanised Steel	
Y	5	STREET LIGHTING	IMMINGHAM ROAD	STALLINGBOROUGH	519550.28	411300.8	2017		51282	1 Urbis LED	Teceo 48 LED 700mA	104 Watts	10.00 Metres	Galvanised Steel	
Y	6	STREET LIGHTING	IMMINGHAM ROAD	STALLINGBOROUGH	519450.84	411331.31	2017		51283	1 Urbis LED	Teceo 48 LED 700mA	104 Watts	10.00 Metres	Galvanised Steel	
Y	7	STREET LIGHTING	IMMINGHAM ROAD	STALLINGBOROUGH	519457.22	411361	2014		51284	1 Urbis LED	Teceo 48 LED 700mA	104 Watts	10.00 Metres	Galvanised Steel	
Y	8	STREET LIGHTING	IMMINGHAM ROAD	STALLINGBOROUGH	519431.98	411346.56	2017		51285	1 Urbis LED	Teceo 40 LED 500mA	64 Watts	10.00 Metres	Galvanised Steel	
Y	10	STREET LIGHTING	IMMINGHAM ROAD	STALLINGBOROUGH	518712.87	411984.27	2014		66905	1 Urbis LED	Teceo 32 LED 500mA	52 Watts	8.00 Metres	Galvanised Steel	
Y	11	STREET LIGHTING	IMMINGHAM ROAD	STALLINGBOROUGH	518700.91	412007.61	2014		66906	1 Urbis LED	Teceo 32 LED 500mA	52 Watts	8.00 Metres	Galvanised Steel	
Y	12	STREET LIGHTING	IMMINGHAM ROAD	STALLINGBOROUGH	518691.37	412026.93	2014		66907	1 Urbis LED	Teceo 32 LED 500mA	52 Watts	8.00 Metres	Galvanised Steel	
Y	13	STREET LIGHTING	IMMINGHAM ROAD	STALLINGBOROUGH	518695.72	412046.76	2014		51483	1 Urbis LED	Teceo 32 LED 500mA	52 Watts	6.00 Metres	Steel	
Y	14	STREET LIGHTING	IMMINGHAM ROAD	STALLINGBOROUGH	518649.23	412083.04	2014		66908	1 Urbis LED	Teceo 32 LED 500mA	52 Watts	8.00 Metres	Steel	
Y	1	STREET LIGHTING	BRIGSLEY ROAD	EAST RAVENDALE	524164.15	400550.86	1998		44710	1 Urbis LED	Teceo 48 LED 700mA	104 Watts	10.00 Metres	Galvanised Steel	
Y	2	STREET LIGHTING	BRIGSLEY ROAD	EAST RAVENDALE	524180.67	400579.24	1998		44711	1 Urbis LED	Teceo 48 LED 700mA	104 Watts	10.00 Metres	Galvanised Steel	
Y	3	STREET LIGHTING	BRIGSLEY ROAD	EAST RAVENDALE	524196.55	400599.36	1998		44712	1 Urbis LED	Teceo 48 LED 700mA	104 Watts	10.00 Metres	Galvanised Steel	
Y	1	STREET LIGHTING	ASPEN COURT FOOTPATH	CLEETHORPES	529987.03	406767.84	2007		43456	Urbis	Axia 8 LED 350mA	10 Watts	5.00 Metres	Galvanised Steel	
Y	2	STREET LIGHTING	ASPEN COURT FOOTPATH	CLEETHORPES	530004.84	406743.95	2007		43457	Urbis	Axia 8 LED 350mA	10 Watts	5.00 Metres	Galvanised Steel	
Y	3	STREET LIGHTING	ASPEN COURT FOOTPATH	CLEETHORPES	530015.84	406725.79	2009		43458	Urbis	Axia 8 LED 350mA	10 Watts	5.00 Metres	Steel	
Y	1	STREET LIGHTING	LADY FRANCIS CRESCENT FOOTPATH	CLEETHORPES	529397.69	408365.42	2003		52093	Urbis	Axia 16 LED 350mA	19 Watts	6.00 Metres	Galvanised Steel	
Y	2	STREET LIGHTING	LADY FRANCIS CRESCENT FOOTPATH	CLEETHORPES	529383.47	408383.49	2003		52094	Urbis	Axia 16 LED 350mA	19 Watts	6.00 Metres	Galvanised Steel	
Y	4	STREET LIGHTING	AFRICA CLOSE FOOTPATH	GRIMSBY	523932.7	407653.9	2009		42761	Urbis	Axia 8 LED 350mA	10 Watts	6.00 Metres	Steel	
Y	5	STREET LIGHTING	AFRICA CLOSE FOOTPATH	GRIMSBY	523936.9	407632.3	2009		42762	Urbis	Axia 8 LED 350mA	10 Watts	6.00 Metres	Steel	
Y	1	STREET LIGHTING	ALEXANDRA DOCK FOOTPATH	GRIMSBY	527012.04	409928.82	1987		42991	Urbis	Axia 16 LED 350mA	19 Watts	5.00 Metres	Cast Iron	
Y	2	STREET LIGHTING	ALEXANDRA DOCK FOOTPATH	GRIMSBY	527011.54	409909.83	1987		42992	Urbis	Axia 16 LED 350mA	19 Watts	5.00 Metres	Cast Iron	
Y	3	STREET LIGHTING	ALEXANDRA DOCK FOOTPATH	GRIMSBY	527010.47	409888.13	1987		42993	Urbis	Axia 16 LED 350mA	19 Watts	5.00 Metres	Cast Iron	
Y	4	STREET LIGHTING	ALEXANDRA DOCK FOOTPATH	GRIMSBY	527009.51	409868.31	1987		42994	Urbis	Axia 16 LED 350mA	19 Watts	5.00 Metres	Cast Iron	
Y	5	STREET LIGHTING	ALEXANDRA DOCK FOOTPATH	GRIMSBY	527008.75	409850.33	1987		42995	Urbis	Axia 16 LED 350mA	19 Watts	5.00 Metres	Cast Iron	
Y	6	STREET LIGHTING	ALEXANDRA DOCK FOOTPATH	GRIMSBY	527007.99	409832.61	1987		42996	Urbis	Axia 16 LED 350mA	19 Watts	5.00 Metres	Cast Iron	
Y	7	STREET LIGHTING	ALEXANDRA DOCK FOOTPATH	GRIMSBY	527007.28	409809.91	1987		42997	Urbis	Axia 16 LED 350mA	19 Watts	5.00 Metres	Cast Iron	
Y	8	STREET LIGHTING	ALEXANDRA DOCK FOOTPATH	GRIMSBY	526990.07	409794.22	1987		42998	Urbis	Axia 16 LED 350mA	19 Watts	5.00 Metres	Cast Iron	
Y	9	STREET LIGHTING	ALEXANDRA DOCK FOOTPATH	GRIMSBY	527006.02	409782.32	1987		42999	Urbis	Axia 16 LED 350mA	19 Watts	5.00 Metres	Cast Iron	
Y	10	STREET LIGHTING	ALEXANDRA DOCK FOOTPATH	GRIMSBY	527005.64	409765.8	1987		43000	Urbis	Axia 16 LED 350mA	19 Watts	5.00 Metres	Cast Iron	
Y	11	STREET LIGHTING	ALEXANDRA DOCK FOOTPATH	GRIMSBY	527004.75	409744.09	1987		43001	Urbis	Axia 16 LED 350mA	19 Watts	5.00 Metres	Cast Iron	
Y	12	STREET LIGHTING	ALEXANDRA DOCK FOOTPATH	GRIMSBY	526992.22	409733.14	1987		43002	Urbis	Axia 16 LED 350mA	19 Watts	5.00 Metres	Cast Iron	
Y	13	STREET LIGHTING	ALEXANDRA DOCK FOOTPATH	GRIMSBY	527003.87	409725.29	1987		43003	Urbis	Axia 16 LED 350mA	19 Watts	5.00 Metres	Cast Iron	
Y	14	STREET LIGHTING	ALEXANDRA DOCK FOOTPATH	GRIMSBY	527003.16	409706.14	1987		43004	Urbis	Axia 16 LED 350mA	19 Watts	5.00 Metres	Cast Iron	
Y	15	STREET LIGHTING	ALEXANDRA DOCK FOOTPATH	GRIMSBY	526967.92	409703.41	1987		43005	Design Plan		21 Watts	4.00 Metres	Steel	
Y	16	STREET LIGHTING	ALEXANDRA DOCK FOOTPATH	GRIMSBY	526981.69	409701.99	1987		43006	Design Plan		21 Watts	4.00 Metres	Steel	
Y	17	STREET LIGHTING	ALEXANDRA DOCK FOOTPATH	GRIMSBY	526995.46	409700.37	1987		43007	Design Plan		21 Watts	4.00 Metres	Steel	
Y	18	STREET LIGHTING	ALEXANDRA DOCK FOOTPATH	GRIMSBY	527010.24	409702.7	1987		43008	Design Plan		21 Watts	4.00 Metres	Steel	
Y	19	STREET LIGHTING	ALEXANDRA DOCK FOOTPATH	GRIMSBY	527007.81	409678.8	1987		43009	Design Plan		21 Watts	4.00 Metres	Steel	
Y	20	STREET LIGHTING	ALEXANDRA DOCK FOOTPATH	GRIMSBY	527006.8	409663.51	1987		43010	Design Plan		21 Watts	4.00 Metres	Steel	
Y	21	STREET LIGHTING	ALEXANDRA DOCK FOOTPATH	GRIMSBY	527002.95	409641.74	1987		43011	Design Plan		21 Watts	4.00 Metres	Steel	
Y	22	STREET LIGHTING	ALEXANDRA DOCK FOOTPATH	GRIMSBY	527006.29	409625.2	1987		43012	Design Plan		21 Watts	4.00 Metres	Steel	
Y	23	STREET LIGHTING	ALEXANDRA DOCK FOOTPATH	GRIMSBY	527010.19	409607.7	1987		43013	Design Plan		21 Watts	4.00 Metres	Steel	
Y	24	STREET LIGHTING	ALEXANDRA DOCK FOOTPATH	GRIMSBY	527011	409591.29	1987		43014	Design Plan		21 Watts	4.00 Metres	Steel	
Y	1	STREET LIGHTING	AYLESBY ROAD FOOTPATH	GRIMSBY	523108.77	409573.62	1989		43551	Urbis	Axia 8 LED 350mA	10 Watts	5.00 Metres	Galvanised Steel	
Y	2	STREET LIGHTING	AYLESBY ROAD FOOTPATH	GRIMSBY	523132.09	409596.58	1989		43552	Urbis	Axia 8 LED 350mA	10 Watts	5.00 Metres	Galvanised Steel	
Y	3	STREET LIGHTING	AYLESBY ROAD FOOTPATH	GRIMSBY	523147.8	409622.6	1989		43553	Urbis	Axia 8 LED 350mA	10 Watts	5.00 Metres	Galvanised Steel	
Y	1	STREET LIGHTING	BARCROFT STREET FOOTPATH	CLEETHORPES	529150.25	410140.5	1980		43621	Urbis	Axia 8 LED 350mA	10 Watts	5.00 Metres	Galvanised Steel	
Y	2	STREET LIGHTING	BARCROFT STREET FOOTPATH	CLEETHORPES	529123.08	410087.26	1980		43622	Urbis	Axia 8 LED 350mA	10 Watts	5.00 Metres	Galvanised Steel	
Y	3	STREET LIGHTING	BARCROFT STREET FOOTPATH	CLEETHORPES	529100.47	410041.23	1980		43623	Urbis	Axia 8 LED 350mA	10 Watts	5.00 Metres	Galvanised Steel	
Y	4	STREET LIGHTING	BARCROFT STREET FOOTPATH	CLEETHORPES	529145.76	410075.77	1980		62925	Urbis	Axia 8 LED 350mA	10 Watts	5.00 Metres	Unknown	
Y	5	STREET LIGHTING	BARCROFT STREET FOOTPATH	CLEETHORPES	529101.89	410095.45	1980		62922	Urbis	Axia 8 LED 350mA	10 Watts	5.00 Metres	Unknown	
Y	6	STREET LIGHTING	BARCROFT STREET FOOTPATH	CLEETHORPES	529079.71	410050.83	1980		62923	Urbis	Axia 8 LED 350mA	10 Watts	5.00 Metres	Unknown	
Y	7	STREET LIGHTING	BARCROFT STREET FOOTPATH	CLEETHORPES	529122.64	410028.65	1980		62924	Urbis	Axia 8 LED 350mA	10 Watts	5.00 Metres	Unknown	
Y	1	STREET LIGHTING	BARGATE AVENUE FOOTPATH	GRIMSBY	526779.56	408277.19	2003		43678	Urbis	Axia 8 LED 350mA	10 Watts	6.00 Metres	Galvanised Steel	
Y	2	STREET LIGHTING	BARGATE AVENUE FOOTPATH	GRIMSBY	526811.37	408279.5	2003		43679	Urbis	Axia 8 LED 350mA	10 Watts	6.00 Metres	Galvanised Steel	
Y	1	STREET LIGHTING	BEECH WAY PLAYGROUND	CLEETHORPES	529722	406720	2001		43908	1 Urbis LED	Axia 16 LED 500mA	28 Watts	6.00 Metres	Galvanised Steel	
Y	1	STREET LIGHTING	BEMROSE WAY FP	GRIMSBY	526287.58	409552.94	1968		44039	Urbis	Axia 8 LED 350mA	10 Watts	6.00 Metres	Steel	
Y	2	STREET LIGHTING	BEMROSE WAY FP	GRIMSBY	526287.71	409525.98	1968		44040	Urbis	Axia 8 LED 350mA	10 Watts	5.00 Metres	Steel	
Y	3	STREET LIGHTING	BEMROSE WAY FP	GRIMSBY	526271.13	409510.03	1968		44041	Urbis	Axia 8 LED 350mA	10 Watts	5.00 Metres	Steel	
Y	4	STREET LIGHTING	BEMROSE WAY FP	GRIMSBY	526250.24	409486.93	1968		44042	Urbis	Axia 8 LED 350mA	10 Watts	6.00 Metres	Steel	
Y	5	STREET LIGHTING	BEMROSE WAY FP	GRIMSBY	526230.75	409467	1968		44043	Urbis	Axia 8 LED 350mA	10 Watts	6.00 Metres	Steel	
Y	1	STREET LIGHTING	BILLINGHAY COURT FOOTPATH	CLEETHORPES	530625.54	407346.08	1987		44141	1 Urbis LED	Axia 16 LED 500mA	28 Watts	5.00 Metres	Galvanised Steel	
Y	1	STREET LIGHTING	BLACKTHORN DRIVE FOOTPATH	GRIMSBY	523398.3	410104.04	1992		44209	Urbis	Axia 8 LED 350mA	10 Watts	5.00 Metres	Galvanised Steel	
Y	2	STREET LIGHTING	BLACKTHORN DRIVE FOOTPATH	GRIMSBY	523483.62	410147.59	1992		44210	Urbis	Axia 8 LED 350mA	10 Watts	5.00 Metres	Galvanised Steel	
Y	3	STREET LIGHTING	BLACKTHORN DRIVE FOOTPATH	GRIMSBY	523509.19	410161.45	1992		44211	Urbis	Axia 8 LED 350mA	10 Watts	5.00 Metres	Galvanised Steel	
Y	4	STREET LIGHTING	BLACKTHORN DRIVE FOOTPATH	GRIMSBY	523507.55	410183.98	1992		44212	Urbis	Axia 8 LED 350mA	10 Watts	5.00 Metres	Galvanised Steel	

Y	3	STREET LIGHTING	BOATING LAKE FOOTPATH	CLEETHORPES	531567.57	407681.7	2013		44316	Urbis	Axia 16 LED 350mA	19 Watts	6.00 Metres	Steel	
Y	4	STREET LIGHTING	BOATING LAKE FOOTPATH	CLEETHORPES	531590.48	407666.1	2013		44317	Urbis	Axia 16 LED 350mA	19 Watts	6.00 Metres	Steel	
Y	5	STREET LIGHTING	BOATING LAKE FOOTPATH	CLEETHORPES	531625.58	407607.32	2007		44318	Urbis	Axia 16 LED 350mA	19 Watts	6.00 Metres	Steel	
Y	6	STREET LIGHTING	BOATING LAKE FOOTPATH	CLEETHORPES	531669.35	407546.8	2013		44319	Urbis	Axia 16 LED 350mA	19 Watts	6.00 Metres	Steel	
Y	7	STREET LIGHTING	BOATING LAKE FOOTPATH	CLEETHORPES	531690.48	407522.82	2013		44320	Urbis	Axia 16 LED 350mA	19 Watts	6.00 Metres	Steel	
Y	8	STREET LIGHTING	BOATING LAKE FOOTPATH	CLEETHORPES	531707.83	407498.71	2013		44321	Urbis	Axia 16 LED 350mA	19 Watts	6.00 Metres	Steel	
Y	9	STREET LIGHTING	BOATING LAKE FOOTPATH	CLEETHORPES	531723.38	407463.19	1987		44322	Other		70 Watts	8.00 Metres	Steel	
Y	10	STREET LIGHTING	BOATING LAKE FOOTPATH	CLEETHORPES	531746.31	407441.81	2013		44323	Urbis	Axia 16 LED 350mA	19 Watts	6.00 Metres	Steel	
Y	11	STREET LIGHTING	BOATING LAKE FOOTPATH	CLEETHORPES	531786.57	407408.73	1987		44324	Urbis	Axia 16 LED 350mA	19 Watts	6.00 Metres	Galvanised Steel	
Y	12	STREET LIGHTING	BOATING LAKE FOOTPATH	CLEETHORPES	531805.56	407394.87	2013		44325	Urbis	Axia 16 LED 350mA	19 Watts	6.00 Metres	Steel	
Y	13	STREET LIGHTING	BOATING LAKE FOOTPATH	CLEETHORPES	531831.13	407371.77	2013		44326	Urbis	Axia 16 LED 350mA	19 Watts	6.00 Metres	Steel	
Y	14	STREET LIGHTING	BOATING LAKE FOOTPATH	CLEETHORPES	531845.2	407353	2007		44327	Urbis	Axia 16 LED 350mA	19 Watts	6.00 Metres	Steel	
Y	15	STREET LIGHTING	BOATING LAKE FOOTPATH	CLEETHORPES	531863.05	407333.04	2007		44328	Urbis	Axia 16 LED 350mA	19 Watts	6.00 Metres	Steel	
Y	16	STREET LIGHTING	BOATING LAKE FOOTPATH	CLEETHORPES	531880.71	407317.68	2013		44329	Urbis	Axia 16 LED 350mA	19 Watts	6.00 Metres	Steel	
Y	17	STREET LIGHTING	BOATING LAKE FOOTPATH	CLEETHORPES	531905.51	407290.12	2013		44330	Urbis	Axia 16 LED 350mA	19 Watts	6.00 Metres	Steel	
Y	18	STREET LIGHTING	BOATING LAKE FOOTPATH	CLEETHORPES	531929.7	407261.07	2013		44331	Urbis	Axia 16 LED 350mA	19 Watts	6.00 Metres	Steel	
Y	19	STREET LIGHTING	BOATING LAKE FOOTPATH	CLEETHORPES	531957.49	407239.95	2013		44332	Urbis	Axia 16 LED 350mA	19 Watts	6.00 Metres	Steel	
Y	20	STREET LIGHTING	BOATING LAKE FOOTPATH	CLEETHORPES	531974.47	407207.28	2007		44333	Urbis	Axia 16 LED 350mA	19 Watts	6.00 Metres	Steel	
Y	21	STREET LIGHTING	BOATING LAKE FOOTPATH	CLEETHORPES	531989.62	407094.51	2007		44334	Urbis	Axia 16 LED 350mA	19 Watts	6.00 Metres	Steel	
Y	22	STREET LIGHTING	BOATING LAKE FOOTPATH	CLEETHORPES	532007.41	407114.86	2007		44335	Urbis	Axia 16 LED 350mA	19 Watts	6.00 Metres	Steel	
Y	23	STREET LIGHTING	BOATING LAKE FOOTPATH	CLEETHORPES	532010.85	407142.23	2007		44336	Urbis	Axia 16 LED 350mA	19 Watts	6.00 Metres	Steel	
Y	24	STREET LIGHTING	BOATING LAKE FOOTPATH	CLEETHORPES	531994.38	407167.58	2007		44337	Urbis	Axia 16 LED 350mA	19 Watts	6.00 Metres	Steel	
Y	25	STREET LIGHTING	BOATING LAKE FOOTPATH	CLEETHORPES	531973.11	407186.77	2007		44338	Urbis	Axia 16 LED 350mA	19 Watts	6.00 Metres	Steel	
Y	26	STREET LIGHTING	BOATING LAKE FOOTPATH	CLEETHORPES	531954.55	407200.38	2007		44339	Urbis	Axia 16 LED 350mA	19 Watts	6.00 Metres	Steel	
Y	27	STREET LIGHTING	BOATING LAKE FOOTPATH	CLEETHORPES	531938.78	407215.85	2007		44340	Urbis	Axia 16 LED 350mA	19 Watts	6.00 Metres	Steel	
Y	28	STREET LIGHTING	BOATING LAKE FOOTPATH	CLEETHORPES	531922.77	407232.89	2007		44341	Urbis	Axia 16 LED 350mA	19 Watts	6.00 Metres	Steel	
Y	29	STREET LIGHTING	BOATING LAKE FOOTPATH	CLEETHORPES	531905.69	407250.72	2007		44342	Urbis	Axia 16 LED 350mA	19 Watts	6.00 Metres	Steel	
Y	30	STREET LIGHTING	BOATING LAKE FOOTPATH	CLEETHORPES	531888.68	407266.23	2007		44343	Urbis	Axia 16 LED 350mA	19 Watts	6.00 Metres	Steel	
Y	31	STREET LIGHTING	BOATING LAKE FOOTPATH	CLEETHORPES	531868.48	407288.21	2007		44344	Urbis	Axia 16 LED 350mA	19 Watts	6.00 Metres	Steel	
Y	32	STREET LIGHTING	BOATING LAKE FOOTPATH	CLEETHORPES	531849.45	407306.35	2007		44345	Urbis	Axia 16 LED 350mA	19 Watts	6.00 Metres	Steel	
Y	33	STREET LIGHTING	BOATING LAKE FOOTPATH	CLEETHORPES	531831.71	407324.2	2014		44346	DW Windsor	Other	59 Watts	6.00 Metres	Steel	
Y	34	STREET LIGHTING	BOATING LAKE FOOTPATH	CLEETHORPES	531797.61	407354.98	2014		44347	DW Windsor	Other	59 Watts	6.00 Metres	Steel	
Y	35	STREET LIGHTING	BOATING LAKE FOOTPATH	CLEETHORPES	531777.87	407377.35	2014		44348	DW Windsor	Other	59 Watts	6.00 Metres	Steel	
Y	36	STREET LIGHTING	BOATING LAKE FOOTPATH	CLEETHORPES	531740.84	407423.09	2014		44349	DW Windsor	Other	59 Watts	6.00 Metres	Steel	
Y	37	STREET LIGHTING	BOATING LAKE FOOTPATH	CLEETHORPES	531712.39	407457.83	2014		44350	DW Windsor	Other	59 Watts	6.00 Metres	Steel	
Y	38	STREET LIGHTING	BOATING LAKE FOOTPATH	CLEETHORPES	531684.05	407493.17	2014		44351	DW Windsor	Other	59 Watts	6.00 Metres	Steel	
Y	39	STREET LIGHTING	BOATING LAKE FOOTPATH	CLEETHORPES	531665.59	407516.38	2014		44352	DW Windsor	Other	59 Watts	6.00 Metres	Steel	
Y	40	STREET LIGHTING	BOATING LAKE FOOTPATH	CLEETHORPES	531647.2	407539.84	2014		44353	DW Windsor	Other	59 Watts	6.00 Metres	Steel	
Y	41	STREET LIGHTING	BOATING LAKE FOOTPATH	CLEETHORPES	531629.38	407565.01	2014		44354	DW Windsor	Other	59 Watts	6.00 Metres	Steel	
Y	42	STREET LIGHTING	BOATING LAKE FOOTPATH	CLEETHORPES	531608.69	407600.5	2014		44355	DW Windsor	Other	59 Watts	6.00 Metres	Steel	
Y	43	STREET LIGHTING	BOATING LAKE FOOTPATH	CLEETHORPES	531583.18	407642.53	2014		44356	DW Windsor	Other	59 Watts	6.00 Metres	Steel	
Y	1	STREET LIGHTING	BODIAM WAY FOOTPATH	GRIMSBY	527767.24	409762.86	1967		44362	1 Urbis LED	Axia 16 LED 500mA	28 Watts	5.00 Metres	Galvanised Steel	
Y	1	STREET LIGHTING	BRIGHOWGATE BUS STATION	GRIMSBY	526671.58	409054.37	2024	18/01/2024	69370	Urbis	Teceo 48 LED 700mA	104 Watts	8.00 Metres	Galvanised Steel	
Y	2	STREET LIGHTING	BRIGHOWGATE BUS STATION	GRIMSBY	526616.36	409070.67	2024	18/01/2024	69844	Urbis	Teceo 48 LED 700mA	104 Watts	8.00 Metres	Galvanised Steel	
Y	3	STREET LIGHTING	BRIGHOWGATE BUS STATION	GRIMSBY	526650.11	409080.83	1956		44705	1 Urbis LED	Teceo 48 LED 700mA	104 Watts	8.00 Metres	Steel	
Y	4	STREET LIGHTING	BRIGHOWGATE BUS STATION	GRIMSBY	526684.14	409071.92	1956		44706	1 Urbis LED	Teceo 48 LED 700mA	104 Watts	8.00 Metres	Steel	
Y	1	STREET LIGHTING	BUS TERMINAL LINK	GRIMSBY	526987.11	409399.93	2014	11/03/2014	68566	1 Urbis LED	Teceo 48 LED 700mA	104 Watts	10.00 Metres	Galvanised Steel	
Y	1	STREET LIGHTING	FOOTPATH BETWEEN CAENBY ROAD	CLEETHORPES	530550.67	407470.24	1993		48692	Urbis	Axia 16 LED 350mA	19 Watts	5.00 Metres	Galvanised Steel	
Y	2	STREET LIGHTING	FOOTPATH BETWEEN CAENBY ROAD	CLEETHORPES	530572.69	407492.21	1993		48693	Urbis	Axia 16 LED 350mA	19 Watts	5.00 Metres	Galvanised Steel	
Y	1	STREET LIGHTING	CAMBRIDGE ROAD SCHOOL	GRIMSBY	524933.8	408372.96	1993		45161	1 Urbis LED	Axia 16 LED 500mA	28 Watts	6.00 Metres	Galvanised Steel	
Y	2	STREET LIGHTING	CAMBRIDGE ROAD SCHOOL	GRIMSBY	524919.88	408349.16	1993		45162	1 Urbis LED	Axia 16 LED 500mA	28 Watts	6.00 Metres	Galvanised Steel	
Y	3	STREET LIGHTING	CAMBRIDGE ROAD SCHOOL	GRIMSBY	524915.32	408316.89	1993		45163	1 Urbis LED	Axia 16 LED 500mA	28 Watts	6.00 Metres	Galvanised Steel	
Y	4	STREET LIGHTING	CAMBRIDGE ROAD SCHOOL	GRIMSBY	524901.4	408289.55	1993		45164	1 Urbis LED	Axia 16 LED 500mA	28 Watts	6.00 Metres	Galvanised Steel	
Y	5	STREET LIGHTING	CAMBRIDGE ROAD SCHOOL	GRIMSBY	524915.07	408283.47	1993		45165	1 Urbis LED	Axia 16 LED 500mA	28 Watts	6.00 Metres	Galvanised Steel	
Y	1	STREET LIGHTING	CANDLESBY ROAD ROUNDABOUT	GRIMSBY	523147.42	409327.13	2011		45213	WRTL	Other	60 Watts	8.00 Metres	Galvanised Steel	
Y	1	STREET LIGHTING	CATHERINE STREET FOOTPATH	GRIMSBY	527382.18	409045.83	1995		45477	Urbis	Axia 8 LED 350mA	10 Watts	6.00 Metres	Galvanised Steel	
Y	2	STREET LIGHTING	CATHERINE STREET FOOTPATH	GRIMSBY	527342.43	409060.07	1995		45478	Urbis	Axia 8 LED 350mA	10 Watts	6.00 Metres	Galvanised Steel	
Y	3	STREET LIGHTING	CATHERINE STREET FOOTPATH	GRIMSBY	527304.71	409078.93	1995		45479	Urbis	Axia 8 LED 350mA	10 Watts	6.00 Metres	Galvanised Steel	
Y	4	STREET LIGHTING	CATHERINE STREET FOOTPATH	GRIMSBY	527297.24	409086.33	1995		45480	Urbis	Axia 8 LED 350mA	10 Watts	5.00 Metres	Galvanised Steel	
Y	5	STREET LIGHTING	CATHERINE STREET FOOTPATH	GRIMSBY	527298.26	409105.38	1995		45481	Urbis	Axia 8 LED 350mA	10 Watts	5.00 Metres	Galvanised Steel	
Y	6	STREET LIGHTING	CATHERINE STREET FOOTPATH	GRIMSBY	527261.17	409094.12	1995		45482	Urbis	Axia 8 LED 350mA	10 Watts	5.00 Metres	Galvanised Steel	
Y	7	STREET LIGHTING	CATHERINE STREET FOOTPATH	GRIMSBY	527243.32	409105.19	1995		45483	Urbis	Axia 8 LED 350mA	10 Watts	5.00 Metres	Galvanised Steel	
Y	8	STREET LIGHTING	CATHERINE STREET FOOTPATH	GRIMSBY	527228.63	409119.94	1995		45484	Urbis	Axia 8 LED 350mA	10 Watts	5.00 Metres	Galvanised Steel	
Y	9	STREET LIGHTING	CATHERINE STREET FOOTPATH	GRIMSBY	527212.56	409133.67	1995		45485	Urbis	Axia 8 LED 350mA	10 Watts	5.00 Metres	Galvanised Steel	
Y	10	STREET LIGHTING	CATHERINE STREET FOOTPATH	GRIMSBY	527194.96	409145.44	1995		45486	Urbis	Axia 8 LED 350mA	10 Watts	5.00 Metres	Galvanised Steel	
Y	11	STREET LIGHTING	CATHERINE STREET FOOTPATH	GRIMSBY	527176.1	409154.75	1995		45487	Urbis	Axia 8 LED 350mA	10 Watts	5.00 Metres	Galvanised Steel	
Y	12	STREET LIGHTING	CATHERINE STREET FOOTPATH	GRIMSBY	527156.86	409162.59	1995		45488	Urbis	Axia 8 LED 350mA	10 Watts	5.00 Metres	Galvanised Steel	
Y	13	STREET LIGHTING	CATHERINE STREET FOOTPATH	GRIMSBY	527135.6	409157.72	1995		45489	Urbis	Axia 8 LED 350mA	10 Watts	5.00 Metres	Galvanised Steel	
Y	14	STREET LIGHTING	CATHERINE STREET FOOTPATH	GRIMSBY	527127.5	409134.74	1995		45490	Urbis	Axia 8 LED 350mA	10 Watts	5.00 Metres	Galvanised Steel	
Y	15	STREET LIGHTING	CATHERINE STREET FOOTPATH	GRIMSBY	527120.53	409114.05	1995		45491	Urbis	Axia 8 LED 350mA	10 Watts	5.00 Metres	Galvanised Steel	
Y	1	STREET LIGHTING	CEDAR CLOSE OAK WAY FOOTPATH	CLEETHORPES	529792.58	406716.92	1993		45521	Urbis	Axia 16 LED 350mA	19 Watts	5.00 Metres	Galvanised Steel	
Y	2	STREET LIGHTING	CEDAR CLOSE OAK WAY FOOTPATH	CLEETHORPES	529790.81	406753	1993		45522	Urbis	Axia 16 LED 350mA	19 Watts	5.00 Metres	Galvanised Steel	
Y	1	STREET LIGHTING	CEMETARY FOOTPATH	CLEETHORPES	529922.63	408160.82	2000		45534	1 Urbis LED	Axia 16 LED 500mA	28 Watts	6.00 Metres	Galvanised Steel	
Y	2	STREET LIGHTING	CEMETARY FOOTPATH	CLEETHORPES	529946.81	408174.3	2000		45535	1 Urbis LED	Axia 16 LED 500mA	28 Watts	6.00 Metres	Galvanised Steel	
Y	3	STREET LIGHTING	CEMETARY FOOTPATH	CLEETHORPES	529975.67	408197.02	2000		45536	1 Urbis LED	Axia 16 LED 500mA	28 Watts	6.00 Metres	Galvanised Steel	
Y	4	STREET LIGHTING	CEMETARY FOOTPATH	CLEETHORPES	530004.27	408219.3	2000		45537	1 Urbis LED	Axia 16 LED 500mA	28 Watts	6.00 Metres	Galvanised Steel	
Y	5	STREET LIGHTING	CEMETARY FOOTPATH	CLEETHORPES	530034.52	408242.34	2000		45538	1 Urbis LED	Axia 16 LED 500mA	28 Watts	6.00 Metres	Galvanised Steel	
Y	6	STREET LIGHTING	CEMETARY FOOTPATH	CLEETHORPES	530066.02	408260.73	2000		45539	1 Urbis LED	Axia 16 LED 500mA	28 Watts	6.00 Metres	Galvanised Steel	
Y	7	STREET LIGHTING	CEMETARY FOOTPATH	CLEETHORPES	530091.33	408285.95	2000		45540	1 Urbis LED	Axia 16 LED 500mA	28 Watts	6.00 Metres	Galvanised Steel	
Y	1	STREET LIGHTING	CHANTRY CLOSE FOOTPATH	GRIMSBY	526185.31	409502.08	2021	29/07/2021	68696	Urbis	Axia 16 LED 350mA	19 Watts	6.00 Metres	Steel	
Y	1	STREET LIGHTING	FOOTPATH FROM CLIXBY CLOSE TO	CLEETHORPES	531221.57	407202.34	2015		46326	Urbis	Axia 16 LED 350mA	19 Watts	6.00 Metres	Steel	
Y	1	STREET LIGHTING	COLLINGWOOD CRESCENT SERVICE	GRIMSBY	523731.29	407562.58	1983		46417	1 Urbis LED	Teceo 40 LED 500mA	64 Watts	8.00 Metres	Steel	
Y	1	STREET LIGHTING	COLLINGWOOD CRESCENT SERVICE	GRIMSBY	523653.32	407545.62	1983		46418	1 Urbis LED	Teceo 40 LED 500mA	64 Watts	8.00 Metres	Steel	
Y	1	STREET LIGHTING	COLLINGWOOD CRESCENT	GRIMSBY	523508.39	407604.11	1967		46416	Urbis	Axia 8 LED 350mA	10 Watts	5.00 Metres	Steel	
Y	1	STREET LIGHTING	CONINGSBY DRIVE FOOTPATH	GRIMSBY	525335.64	408068.96	1986		46515	Urbis	Axia 8 LED 350mA	10 Watts	5.00 Metres	Galvanised Steel	
Y	2	STREET LIGHTING	CONINGSBY DRIVE FOOTPATH	GRIMSBY	525316.14	408048.02	1986		46516	Urbis	Axia 8 LED 350mA	10 Watts	5.00 Metres	Galvanised Steel	
Y	3	STREET LIGHTING	CONINGSBY DRIVE FOOTPATH	GRIMSBY	525316.52	408033.08	1986		46517	Urbis	Axia 8 LED 350mA	10 Watts	5.00 Metres	Galvanised Steel	
Y	1	STREET LIGHTING	CORPORATION ROAD ROUNDABOUT	GRIMSBY	526936.46	409938.83	1976		46773	1 Urbis LED	Teceo 40 LED 500mA	64 Watts	10.00 Metres	Galvanised Steel	
Y	2	STREET LIGHTING	CORPORATION ROAD ROUNDABOUT	GRIMSBY	526918.03	409940.04	1988		46774	1 Urbis LED	Teceo 40 LED 500mA	64 Watts	10.00 Metres	Galvanised Steel	
Y	3	STREET LIGHTING	CORPORATION ROAD ROUNDABOUT	GRIMSBY	526919.45	409967.59	1988		46775	1 Urbis LED	Teceo 40 LED 500mA	64 Watts	10.00 Metres	Galvanised Steel	
Y	4	STREET LIGHTING	CORPORATION ROAD ROUNDABOUT	GRIMSBY	526933.83	409968.6	1988		46776	1 Urbis LED	Teceo 40 LED 500mA	64 Watts	10.00 Metres	Galvanised Steel	
Y	1	STREET LIGHTING	MARKET HOTEL ROUNDABOUT	GRIMSBY	525691.94	409408.28	1975		61558	1 Urbis LED	Ampera 48 LED 700mA	104 Watts	18.00 Metres	Galvanised Steel	
Y	1	STREET LIGHTING	MARKET HOTEL ROUNDABOUT	GRIMSBY	525691.94	409408.28	1975		62090	1 Urbis LED	Ampera 48 LED 700mA	104 Watts	18.00 Metres	Galvanised Steel	
Y	1	STREET LIGHTING	MARKET HOTEL ROUNDABOUT	GRIMSBY	525691.94	409408.28	1975		66318	1 Urbis LED	Ampera 48 LED 700mA	104 Watts	18.00 Metres	Galvanised Steel	
Y	1	STREET LIGHTING	MARKET HOTEL ROUNDABOUT	GRIMSBY	525691.94	409408.28	1975		66319	1 Urbis LED	Ampera 48 LED 700mA	104 Watts	18.00 Metres	Galvanised Steel	
Y	1	STREET LIGHTING	MARKET HOTEL ROUNDABOUT	GRIMSBY	525691.94	409408.28	1975		66320	1 Urbis LED	Ampera 48 LED 700mA	104 Watts	18.00 Metres	Galvanised Steel	
Y	1	STREET LIGHTING	MARKET HOTEL ROUNDABOUT	GRIMSBY	525691.94	409408.28	1975		66321	1 Urbis LED	Ampera 48 LED 700mA	104 Watts	18.00 Metres	Galvanised Steel	
Y	1	STREET LIGHTING	DAUBNEY STREET FOOTPATH	CLEETHORPES	529081.08	410161.24	1985		47329	1 Urbis LED	Axia 16 LED 500mA	28 Watts	5.00 Metres	Galvanised Steel	
Y	2	STREET LIGHTING	DAUBNEY STREET FOOTPATH	CLEETHORPES	529065.34	410133.39	1985		47330	1 Urbis LED	Axia 16 LED 500mA	28 Watts	5.00 Metres	Galvanised Steel	
Y	3	STREET LIGHTING	DAUBNEY STREET FOOTPATH	CLEETHORPES	529043.53	410089.5	1985		47331	1 Urbis LED	Axia 16 LED 500mA	28 Watts	5.00 Metres	Galvanised Steel	
Y	4	STREET LIGHTING	DAUBNEY STREET FOOTPATH	CLEETHORPES	529024.5	410046.75	1985		47332	1 Urbis LED	Axia 16 LED 500mA	28 Watts	5.00 Metres	Galvanised Steel	
Y	5	STREET LIGHTING	DAUBNEY STREET FOOTPATH	CLEETHORPES	529012.05	410025.5	1985		47333	Urbis	Axia 8 LED 350mA	10 Watts	5.00 Metres	Galvanised Steel	
Y	6	STREET LIGHTING	DAUBNEY STREET FOOTPATH	CLEETHORPES	529002.36	410057.34	1985		62091	Thorn		8 Watts	5.00 Metres	Unknown	
Y	7	STREET LIGHTING	DAUBNEY STREET FOOTPATH	CLEETHORPES	529043.38	410031.27	1985		61560	Thorn		8 Watts	5.00 Metres	Unknown	
Y	8	STREET LIGHTING	DAUBNEY STREET FOOTPATH	CLEETHORPES	529022.49	410098.19	1985		61561	Thorn		8 Watts	5.00 Metres	Unknown	
Y	9	STREET LIGHTING	DAUBNEY STREET FOOTPATH	CLEETHORPES	529065.49	410078.27	1985		61562	Thorn		8 Watts	5.00 Metres	Unknown	
Y	10	STREET LIGHTING	DAUBNEY STREET FOOTPATH	CLEETHORPES	529046.79	410147.27	1985		61563	Thorn		8 Watts	5.00 Metres	Unknown	
Y	11	STREET LIGHTING	DAUBNEY STREET FOOTPATH	CLEETHORPES	529089.47	410126.08	1985		61564	Thorn		8 Watts	5.00 Metres	Unknown	
Y	1	STREET LIGHTING	DAVENPORT DRIVE FOOTPATH	CLEETHORPES	529514.95	408280.48	2010		66560	Urbis	Axia 8 LED 350mA	10 Watts	6.00 Metres	Steel	
Y	2	STREET LIGHTING	DAVENPORT DRIVE FOOTPATH	CLEETHORPES	529510.68	408279.88	2010		47364	Urbis	Axia 8 LED 350mA	10 Watts	6.00 Metres	Steel	

Y	1	STREET LIGHTING	DAVENPORT DRIVE ROUNDABOUT	CLEETHORPES	529458.24	408048.28	1995		61565	1 Urbis LED	Teceo 48 LED 500mA	79 Watts	10.00 Metres	Galvanised Steel	
Y	1	STREET LIGHTING	DAVENPORT DRIVE ROUNDABOUT	CLEETHORPES	529458.24	408048.28	1995		62097	1 Urbis LED	Teceo 48 LED 500mA	79 Watts	10.00 Metres	Galvanised Steel	
Y	2	STREET LIGHTING	DAVENPORT DRIVE ROUNDABOUT	CLEETHORPES	529472.17	408033.85	1995		47365	1 Urbis LED	Teceo 48 LED 500mA	79 Watts	10.00 Metres	Galvanised Steel	
Y	3	STREET LIGHTING	DAVENPORT DRIVE ROUNDABOUT	CLEETHORPES	529464.57	408012.34	1995		47366	1 Urbis LED	Teceo 48 LED 500mA	79 Watts	10.00 Metres	Galvanised Steel	
Y	4	STREET LIGHTING	DAVENPORT DRIVE ROUNDABOUT	CLEETHORPES	529437.76	408007.69	1995		47367	1 Urbis LED	Teceo 48 LED 500mA	79 Watts	10.00 Metres	Galvanised Steel	
Y	5	STREET LIGHTING	DAVENPORT DRIVE ROUNDABOUT	CLEETHORPES	529422.45	408030.2	1995		47368	1 Urbis LED	Teceo 48 LED 500mA	79 Watts	10.00 Metres	Galvanised Steel	
Y	6	STREET LIGHTING	DAVENPORT DRIVE ROUNDABOUT	CLEETHORPES	529439.79	408049.84	1995		47369	1 Urbis LED	Teceo 48 LED 500mA	79 Watts	10.00 Metres	Galvanised Steel	
Y	1	STREET LIGHTING	DAVISONS AVENUE	GRIMSBY	526727.67	409794.35	1968		47395	Urbis	Axia 16 LED 350mA	19 Watts	5.00 Metres	Steel	
Y	2	STREET LIGHTING	DAVISONS AVENUE	GRIMSBY	526725.4	409773.78	2014		47396	Urbis	Axia 16 LED 350mA	19 Watts	6.00 Metres	Galvanised Steel	
Y	1	STREET LIGHTING	DEFENDER DRIVE FOOTPATH	GRIMSBY	523026.95	409011	1990		47427	Urbis	Axia 16 LED 350mA	19 Watts	5.00 Metres	Galvanised Steel	
Y	2	STREET LIGHTING	DEFENDER DRIVE FOOTPATH	GRIMSBY	523049.78	409002.8	1990		47428	Urbis	Axia 16 LED 350mA	19 Watts	5.00 Metres	Galvanised Steel	
Y	1	STREET LIGHTING	DIXON AVENUE REAR ACCESS	GRIMSBY	527470.27	408028.54	2018	17/09/2018	67123	Urbis	Axia 16 LED 350mA	19 Watts	6.00 Metres	Galvanised Steel	
Y	2	STREET LIGHTING	DIXON AVENUE REAR ACCESS	GRIMSBY	527523.28	408045.79	2018	17/09/2018	67219	Urbis	Axia 16 LED 350mA	19 Watts	6.00 Metres	Galvanised Steel	
Y	1	STREET LIGHTING	DOUGHTY ROAD ROUNDABOUT	GRIMSBY	526976.08	408986.74	1995		47527	1 Urbis LED	Teceo 40 LED 500mA	64 Watts	10.00 Metres	Galvanised Steel	
Y	2	STREET LIGHTING	DOUGHTY ROAD ROUNDABOUT	GRIMSBY	526993.3	408994.03	2019	30/07/2019	67516	Urbis	Teceo 40 LED 500mA	64 Watts	12.00 Metres	Galvanised Steel	
Y	3	STREET LIGHTING	DOUGHTY ROAD ROUNDABOUT	GRIMSBY	526997.09	408975.22	1995		47529	1 Urbis LED	Teceo 40 LED 500mA	64 Watts	10.00 Metres	Galvanised Steel	
Y	4	STREET LIGHTING	DOUGHTY ROAD ROUNDABOUT	GRIMSBY	526980.63	408969.97	1995		47530	1 Urbis LED	Teceo 48 LED 700mA	104 Watts	10.00 Metres	Galvanised Steel	
Y	1	STREET LIGHTING	DUCHESS STREET CAR PARK	GRIMSBY	526859	409029	1995		61567	Philips		250 Watts	12.00 Metres	Galvanised Steel	
Y	1	STREET LIGHTING	DUCHESS STREET CAR PARK	GRIMSBY	526859	409029	1995		62099	Philips		250 Watts	12.00 Metres	Galvanised Steel	
Y	1	STREET LIGHTING	DUCHESS STREET CAR PARK	GRIMSBY	526859	409029	1995		62934	Philips		250 Watts	12.00 Metres	Galvanised Steel	
Y	1	STREET LIGHTING	DUCHESS STREET CAR PARK	GRIMSBY	526859	409029	1995		62935	Philips		250 Watts	12.00 Metres	Galvanised Steel	
Y	2	STREET LIGHTING	DUCHESS STREET CAR PARK	GRIMSBY	526827	409055	1995		61569	Philips		250 Watts	12.00 Metres	Galvanised Steel	
Y	2	STREET LIGHTING	DUCHESS STREET CAR PARK	GRIMSBY	526827	409055	1995		62101	Philips		250 Watts	12.00 Metres	Galvanised Steel	
Y	2	STREET LIGHTING	DUCHESS STREET CAR PARK	GRIMSBY	526827	409055	1995		62936	Philips		250 Watts	12.00 Metres	Galvanised Steel	
Y	3	STREET LIGHTING	DUCHESS STREET CAR PARK	GRIMSBY	526802.14	409076.09	1995		61568	Philips		250 Watts	12.00 Metres	Galvanised Steel	
Y	3	STREET LIGHTING	DUCHESS STREET CAR PARK	GRIMSBY	526802	409076	1995		62100	Philips		250 Watts	12.00 Metres	Galvanised Steel	
Y	4	STREET LIGHTING	DUCHESS STREET CAR PARK	GRIMSBY	526825	409093	1995		61570	Philips		250 Watts	12.00 Metres	Galvanised Steel	
Y	4	STREET LIGHTING	DUCHESS STREET CAR PARK	GRIMSBY	526825	409093	1995		62102	Philips		250 Watts	12.00 Metres	Galvanised Steel	
Y	4	STREET LIGHTING	DUCHESS STREET CAR PARK	GRIMSBY	526825	409093	1995		62937	Philips		250 Watts	12.00 Metres	Galvanised Steel	
Y	5	STREET LIGHTING	DUCHESS STREET CAR PARK	GRIMSBY	526881	409104	1995		61571	Philips		250 Watts	12.00 Metres	Galvanised Steel	
Y	5	STREET LIGHTING	DUCHESS STREET CAR PARK	GRIMSBY	526881	409104	1995		62103	Philips		250 Watts	12.00 Metres	Galvanised Steel	
Y	6	STREET LIGHTING	DUCHESS STREET CAR PARK	GRIMSBY	526890	409079	1995		61572	Philips		250 Watts	12.00 Metres	Galvanised Steel	
Y	6	STREET LIGHTING	DUCHESS STREET CAR PARK	GRIMSBY	526890	409079	1995		62104	Philips		250 Watts	12.00 Metres	Galvanised Steel	
Y	7	STREET LIGHTING	DUCHESS STREET CAR PARK	GRIMSBY	526920	409060	1995		61573	Philips		250 Watts	12.00 Metres	Galvanised Steel	
Y	7	STREET LIGHTING	DUCHESS STREET CAR PARK	GRIMSBY	526920	409060	1995		62105	Philips		250 Watts	12.00 Metres	Galvanised Steel	
Y	7	STREET LIGHTING	DUCHESS STREET CAR PARK	GRIMSBY	526920	409060	1995		66422	Philips		250 Watts	12.00 Metres	Galvanised Steel	
Y	1	STREET LIGHTING	EASTFIELD FOOTPATH	HUMBERSTON	531199.23	405760.38	2016	17/03/2016	47766	Urbis	Axia 16 LED 350mA	19 Watts	6.00 Metres	Steel	
Y	1	STREET LIGHTING	EDMONDS WAY FOOTPATH	GRIMSBY	526616.99	409724.97	2010		47852	Philips	Other	21 Watts	6.00 Metres	Steel	
Y	2	STREET LIGHTING	EDMONDS WAY FOOTPATH	GRIMSBY	526609.37	409711.9	2010		47853	Philips	Other	21 Watts	6.00 Metres	Steel	
Y	3	STREET LIGHTING	EDMONDS WAY FOOTPATH	GRIMSBY	526580.59	409712.88	2010		47854	Philips	Other	21 Watts	6.00 Metres	Steel	
Y	1	STREET LIGHTING	EDWARD STREET FOOTPATH	CLEETHORPES	530379.24	408415.12	1952		47869	Urbis	Axia 16 LED 350mA	19 Watts	5.00 Metres	Cast Iron	
Y	1	STREET LIGHTING	ESTATE ROAD 5 EXT	GRIMSBY	525132.22	410621.71	2021	12/01/2021	68222	Urbis	Teceo 32 LED 500mA	52 Watts	8.00 Metres	Galvanised Steel	
Y	2	STREET LIGHTING	ESTATE ROAD 5 EXT	GRIMSBY	525162.81	410641.93	1993		48150	1 Urbis LED	Teceo 32 LED 500mA	52 Watts	8.00 Metres	Galvanised Steel	
Y	1	STREET LIGHTING	FILLINGHAM CRESCENT FOOTPATH	CLEETHORPES	531086.25	407298.09	1965		48573	Urbis	Axia 16 LED 350mA	19 Watts	5.00 Metres	Galvanised Steel	
Y	1	STREET LIGHTING	FIRST AVENUE GARAGES	GRIMSBY	526138.68	407841.9	1993		48613	1 Urbis LED	Axia 16 LED 500mA	28 Watts	6.00 Metres	Galvanised Steel	
Y	1	STREET LIGHTING	FLOUR SQUARE FOOTPATH	GRIMSBY	527364.61	410455.4	2013		48669	Urbis	Axia 8 LED 350mA	10 Watts	6.00 Metres	Steel	
Y	2	STREET LIGHTING	FLOUR SQUARE FOOTPATH	GRIMSBY	527396.74	410457.23	2004		48670	Urbis	Axia 8 LED 350mA	10 Watts	5.00 Metres	Galvanised Steel	
Y	3	STREET LIGHTING	FLOUR SQUARE FOOTPATH	GRIMSBY	527432.94	410457.73	2013		48671	Urbis	Axia 8 LED 350mA	10 Watts	6.00 Metres	Steel	
Y	4	STREET LIGHTING	FLOUR SQUARE FOOTPATH	GRIMSBY	527460.15	410458.43	2004		48672	Urbis	Axia 8 LED 350mA	10 Watts	5.00 Metres	Galvanised Steel	
Y	5	STREET LIGHTING	FLOUR SQUARE FOOTPATH	GRIMSBY	527485.85	410459.12	2004		48673	Urbis	Axia 8 LED 350mA	10 Watts	5.00 Metres	Galvanised Steel	
Y	1	STREET LIGHTING	FREDERICK STREET SERVICE ROAD 1	GRIMSBY	526627.75	409850.1	2010		48951	1 Urbis LED	Axia 16 LED 500mA	28 Watts	6.00 Metres	Steel	
Y	2	STREET LIGHTING	FREDERICK STREET SERVICE ROAD 1	GRIMSBY	526584.75	409846.17	2010		48952	1 Urbis LED	Axia 16 LED 500mA	28 Watts	6.00 Metres	Steel	
Y	1	STREET LIGHTING	FREDERICK STREET SERVICE ROAD 2	GRIMSBY	526646.59	409884.88	2010		48953	1 Urbis LED	Axia 16 LED 500mA	28 Watts	6.00 Metres	Steel	
Y	2	STREET LIGHTING	FREDERICK STREET SERVICE ROAD 2	GRIMSBY	526666.96	409898.26	2010		48954	1 Urbis LED	Axia 16 LED 500mA	28 Watts	6.00 Metres	Steel	
Y	3	STREET LIGHTING	FREDERICK STREET SERVICE ROAD 2	GRIMSBY	526659.76	409922.12	2010		48955	1 Urbis LED	Axia 16 LED 500mA	28 Watts	6.00 Metres	Steel	
Y	1	STREET LIGHTING	FREDERICK STREET SERVICE ROAD 3	GRIMSBY	526598.65	409898.41	2010		48956	1 Urbis LED	Axia 16 LED 500mA	28 Watts	6.00 Metres	Steel	
Y	2	STREET LIGHTING	FREDERICK STREET SERVICE ROAD 3	GRIMSBY	526589.41	409928.82	2010		48957	1 Urbis LED	Axia 16 LED 500mA	28 Watts	6.00 Metres	Steel	
Y	1	STREET LIGHTING	FREDRICK WARD R/BRIDGE	GRIMSBY	527023.64	409516.15	1988		61583	Metcraft		70 Watts	5.00 Metres	Steel	
Y	1	STREET LIGHTING	FREDRICK WARD R/BRIDGE	GRIMSBY	527023.64	409516.15	1988		62115	Metcraft		70 Watts	5.00 Metres	Steel	
Y	2	STREET LIGHTING	FREDRICK WARD R/BRIDGE	GRIMSBY	527037.21	409518.18	1988		61584	Metcraft		70 Watts	5.00 Metres	Steel	
Y	2	STREET LIGHTING	FREDRICK WARD R/BRIDGE	GRIMSBY	527037.21	409518.18	1988		62116	Metcraft		70 Watts	5.00 Metres	Steel	
Y	3	STREET LIGHTING	FREDRICK WARD R/BRIDGE	GRIMSBY	527032.15	409542.28	1988		61585	Metcraft		70 Watts	5.00 Metres	Steel	
Y	3	STREET LIGHTING	FREDRICK WARD R/BRIDGE	GRIMSBY	527032.15	409542.28	1988		62117	Metcraft		70 Watts	5.00 Metres	Steel	
Y	4	STREET LIGHTING	FREDRICK WARD R/BRIDGE	GRIMSBY	527017.77	409539.85	1988		61586	Metcraft		70 Watts	5.00 Metres	Steel	
Y	4	STREET LIGHTING	FREDRICK WARD R/BRIDGE	GRIMSBY	527017.77	409539.85	1988		62118	Metcraft		70 Watts	5.00 Metres	Steel	
Y	1	STREET LIGHTING	FREDERICK WARD WAY LOWER WALK	GRIMSBY	526984.91	409538.93	1988		49032	Urbis	Axia 8 LED 350mA	10 Watts	6.00 Metres	Steel	
Y	2	STREET LIGHTING	FREDERICK WARD WAY LOWER WALK	GRIMSBY	526968.33	409534.88	1988		49033	Urbis	Axia 8 LED 350mA	10 Watts	6.00 Metres	Steel	
Y	3	STREET LIGHTING	FREDERICK WARD WAY LOWER WALK	GRIMSBY	526953.64	409533.99	1988		49034	Urbis	Axia 8 LED 350mA	10 Watts	6.00 Metres	Steel	
Y	1	STREET LIGHTING	GAYTON ROAD FOOTPATH	CLEETHORPES	531442.02	407205.36	2002		49139	Urbis	Axia 16 LED 350mA	19 Watts	6.00 Metres	Galvanised Steel	
Y	1	STREET LIGHTING	GILBERT SUTTCLIFFE FOOTPATH	CLEETHORPES	529750.56	406871.8	2008		49209	Urbis	Axia 16 LED 350mA	19 Watts	6.00 Metres	Steel	
Y	2	STREET LIGHTING	GILBERT SUTTCLIFFE FOOTPATH	CLEETHORPES	529740.78	406883.59	2008		49210	Urbis	Axia 16 LED 350mA	19 Watts	6.00 Metres	Steel	
Y	3	STREET LIGHTING	GILBERT SUTTCLIFFE FOOTPATH	CLEETHORPES	529738.97	406894.99	2008		49211	Urbis	Axia 16 LED 350mA	19 Watts	6.00 Metres	Steel	
Y	4	STREET LIGHTING	GILBERT SUTTCLIFFE FOOTPATH	CLEETHORPES	529738.9	406910.8	2008		49212	Urbis	Axia 16 LED 350mA	19 Watts	6.00 Metres	Steel	
Y	1	STREET LIGHTING	GILBEY ROAD CYCLE TRACK	GRIMSBY	525569.69	410269.64	2004		49213	1 Urbis LED	Axia 16 LED 500mA	28 Watts	6.00 Metres	Stainless Steel	
Y	2	STREET LIGHTING	GILBEY ROAD CYCLE TRACK	GRIMSBY	525540.52	410292.42	2004		49214	1 Urbis LED	Axia 16 LED 500mA	28 Watts	6.00 Metres	Stainless Steel	
Y	3	STREET LIGHTING	GILBEY ROAD CYCLE TRACK	GRIMSBY	525516.22	410317.64	2004		49215	1 Urbis LED	Axia 16 LED 500mA	28 Watts	6.00 Metres	Stainless Steel	
Y	4	STREET LIGHTING	GILBEY ROAD CYCLE TRACK	GRIMSBY	525495	410346	2004		49216	1 Urbis LED	Axia 16 LED 500mA	28 Watts	6.00 Metres	Stainless Steel	
Y	5	STREET LIGHTING	GILBEY ROAD CYCLE TRACK	GRIMSBY	525475.1	410383.36	2004		49217	1 Urbis LED	Axia 16 LED 500mA	28 Watts	6.00 Metres	Stainless Steel	
Y	6	STREET LIGHTING	GILBEY ROAD CYCLE TRACK	GRIMSBY	525465.38	410412.62	1954		49218	1 Urbis LED	Axia 16 LED 500mA	28 Watts	8.00 Metres	Steel	
Y	7	STREET LIGHTING	GILBEY ROAD CYCLE TRACK	GRIMSBY	525459.51	410443.1	1954		49219	1 Urbis LED	Axia 16 LED 500mA	28 Watts	8.00 Metres	Steel	
Y	8	STREET LIGHTING	GILBEY ROAD CYCLE TRACK	GRIMSBY	525458.49	410474.9	1954		49220	1 Urbis LED	Axia 16 LED 500mA	28 Watts	8.00 Metres	Steel	
Y	9	STREET LIGHTING	GILBEY ROAD CYCLE TRACK	GRIMSBY	525461.89	410518.49	2011		49221	1 Urbis LED	Axia 16 LED 500mA	28 Watts	6.00 Metres	Steel	
Y	10	STREET LIGHTING	GILBEY ROAD CYCLE TRACK	GRIMSBY	525468.97	410548.49			49222	1 Urbis LED	Axia 16 LED 500mA	28 Watts	8.00 Metres	Steel	
Y	11	STREET LIGHTING	GILBEY ROAD CYCLE TRACK	GRIMSBY	525482.68	410579.31	2004		49223	1 Urbis LED	Axia 16 LED 500mA	28 Watts	6.00 Metres	Stainless Steel	
Y	12	STREET LIGHTING	GILBEY ROAD CYCLE TRACK	GRIMSBY	525502.9	410612.29	1954		49224	1 Urbis LED	Axia 16 LED 500mA	28 Watts	8.00 Metres	Steel	
Y	13	STREET LIGHTING	GILBEY ROAD CYCLE TRACK	GRIMSBY	525558.09	410661.4	1996		49225	1 Urbis LED	Axia 16 LED 500mA	28 Watts	8.00 Metres	Galvanised Steel	
Y	15	STREET LIGHTING	GILBEY ROAD CYCLE TRACK	GRIMSBY	525576.82	410697.35	2006		49226	1 Urbis LED	Axia 16 LED 500mA	28 Watts	8.00 Metres	Steel	
Y	16	STREET LIGHTING	GILBEY ROAD CYCLE TRACK	GRIMSBY	525609.03	410720.62	2004		49227	1 Urbis LED	Axia 16 LED 500mA	28 Watts	6.00 Metres	Stainless Steel	
Y	1	STREET LIGHTING	GILBEY ROAD NORTH	GRIMSBY	525339.92	410752.28	1993		49228	1 Urbis LED	Teceo 48 LED 500mA	79 Watts	10.00 Metres	Galvanised Steel	
Y	1	STREET LIGHTING	GILBEY ROAD NORTH	GRIMSBY	525339.92	410752.28	1993		62969	1 Urbis LED	Teceo 48 LED 500mA	79 Watts	10.00 Metres	Galvanised Steel	
Y	2	STREET LIGHTING	GILBEY ROAD NORTH	GRIMSBY	525369.69	410767.07	1993		49229	1 Urbis LED	Teceo 48 LED 500mA	79 Watts	10.00 Metres	Galvanised Steel	
Y	3	STREET LIGHTING	GILBEY ROAD NORTH	GRIMSBY	525395.61	410768.99	1993		49230	1 Urbis LED	Teceo 48 LED 500mA	79 Watts	10.00 Metres	Galvanised Steel	
Y	4	STREET LIGHTING	GILBEY ROAD NORTH	GRIMSBY	525423.16	410764.74	1993		49231	1 Urbis LED	Teceo 48 LED 500mA	79 Watts	10.00 Metres	Galvanised Steel	
Y	5	STREET LIGHTING	GILBEY ROAD NORTH	GRIMSBY	525457.39	410739.23	1993		49232	1 Urbis LED	Teceo 48 LED 500mA	79 Watts	10.00 Metres	Galvanised Steel	
Y	6	STREET LIGHTING	GILBEY ROAD NORTH	GRIMSBY	525482.16	410728.38	1993		49233	1 Urbis LED	Teceo 48 LED 500mA	79 Watts	10.00 Metres	Galvanised Steel	
Y	7	STREET LIGHTING	GILBEY ROAD NORTH	GRIMSBY	525513.14	410719.47	1993		49234	1 Urbis LED	Teceo 48 LED 500mA	79 Watts	10.00 Metres	Galvanised Steel	
Y	8	STREET LIGHTING	GILBEY ROAD NORTH	GRIMSBY	525545.14	410718.35	1993		49235	1 Urbis LED	Teceo 48 LED 500mA	79 Watts	10.00 Metres	Galvanised Steel	
Y	9	STREET LIGHTING	GILBEY ROAD NORTH	GRIMSBY	525584.23	410725.44	1993		49236	1 Urbis LED	Teceo 48 LED 500mA	79 Watts	10.00 Metres	Galvanised Steel	
Y	10	STREET LIGHTING	GILBEY ROAD NORTH	GRIMSBY	525618.26	410740.94	1993		49237	1 Urbis LED	Teceo 48 LED 500mA	79 Watts	10.00 Metres	Galvanised Steel	
Y	11	STREET LIGHTING	GILBEY ROAD NORTH	GRIMSBY	525642.97	410758.66	1993		49238	1 Urbis LED	Teceo 48 LED 500mA	79 Watts	10.00 Metres	Galvanised Steel	
Y	12	STREET LIGHTING	GILBEY ROAD NORTH	GRIMSBY	525666.87	410784.58	1993		49239	1 Urbis LED	Teceo 48 LED 500mA	79 Watts	10.00 Metres	Galvanised Steel	
Y	13	STREET LIGHTING	GILBEY ROAD NORTH	GRIMSBY	525682.66	410820.94	1993		49240	1 Urbis LED	Teceo 48 LED 500mA	79 Watts	10.00 Metres	Galvanised Steel	
Y	14	STREET LIGHTING	GILBEY ROAD NORTH	GRIMSBY	525701.5	410842.51	1993		49241	1 Urbis LED	Teceo 48 LED 500mA	79 Watts	10.00 Metres	Galvanised Steel	
Y	15	STREET LIGHTING	GILBEY ROAD NORTH	GRIMSBY	525722.97	410866.94	1993		49242	1 Urbis LED	Teceo 48 LED 500mA	79 Watts	10.00 Metres	Galvanised Steel	
Y	16	STREET LIGHTING	GILBEY ROAD NORTH	GRIMSBY	525739.93	410887.19	1993		49243	1 Urbis LED	Teceo 48 LED 500mA	79 Watts	10.00 Metres	Galvanised Steel	
Y	17	STREET LIGHTING	GILBEY ROAD NORTH	GRIMSBY	525762.72	410912.13	1993		49244	1 Urbis LED	Teceo 48 LED 500mA	79 Watts	10.00 Metres	Galvanised Steel	
Y	18	STREET LIGHTING	GILBEY ROAD NORTH	GRIMSBY	525789.05	410942.64	1993		49245	1 Urbis LED	Teceo 48 LED 500mA	79 Watts	10.00 Metres	Galvanised Steel	
Y	19	STREET LIGHTING	GILBEY ROAD NORTH	GRIMSBY	525813.86	410970.87	1993		49246	1 Urbis LED	Teceo 48 LED 500mA	79 Watts	10.00 Metres	Galvanised Steel	
Y	20	STREET LIGHTING	GILBEY ROAD NORTH	GRIMSBY	525845.46	410990.58	2019	25/04/2019	67416	Urbis	Teceo 48 LED 500mA	79 Watts	10.00 Metres	Galvanised Steel	
Y	21	STREET LIGHTING	GILBEY ROAD NORTH	GRIMSBY	525869.35	411012.78	2019	25/04/2019	67417	Urbis	Teceo 48 LED 500mA	79 Watts	10.00 Metres	Galvanised Steel	

Y	1	STREET LIGHTING	GILBEY ROAD SOUTH	GRIMSBY	526039.86	410057.72	1993		49249	1 Urbis LED	Teceo 24 LED 500mA	40 Watts	6.00 Metres	Galvanised Steel	
Y	1	STREET LIGHTING	GILBEY ROAD SOUTH	GRIMSBY	526006.07	410072.58			67921	1 Urbis LED	Teceo 24 LED 500mA	40 Watts	6.00 Metres	Galvanised Steel	
Y	2	STREET LIGHTING	GILBEY ROAD SOUTH	GRIMSBY	526006.07	410072.58	1993		49250	1 Urbis LED	Teceo 24 LED 500mA	40 Watts	6.00 Metres	Galvanised Steel	
Y	3	STREET LIGHTING	GILBEY ROAD SOUTH	GRIMSBY	525977.59	410085.43	1993		49251	1 Urbis LED	Teceo 24 LED 500mA	40 Watts	6.00 Metres	Galvanised Steel	
Y	4	STREET LIGHTING	GILBEY ROAD SOUTH	GRIMSBY	525954.55	410109.04	1993		49252	1 Urbis LED	Teceo 24 LED 500mA	40 Watts	6.00 Metres	Galvanised Steel	
Y	5	STREET LIGHTING	GILBEY ROAD SOUTH	GRIMSBY	525923.54	410109.55	1993		49253	1 Urbis LED	Teceo 24 LED 500mA	40 Watts	6.00 Metres	Galvanised Steel	
Y	6	STREET LIGHTING	GILBEY ROAD SOUTH	GRIMSBY	525899.11	410133.79	1993		49254	1 Urbis LED	Teceo 24 LED 500mA	40 Watts	6.00 Metres	Galvanised Steel	
Y	7	STREET LIGHTING	GILBEY ROAD SOUTH	GRIMSBY	525868.99	410134.04	1993		49255	1 Urbis LED	Teceo 24 LED 500mA	40 Watts	6.00 Metres	Galvanised Steel	
Y	8	STREET LIGHTING	GILBEY ROAD SOUTH	GRIMSBY	525844.94	410157.9	1993		49256	1 Urbis LED	Teceo 24 LED 500mA	40 Watts	6.00 Metres	Galvanised Steel	
Y	9	STREET LIGHTING	GILBEY ROAD SOUTH	GRIMSBY	525814.68	410158.16	1993		49257	1 Urbis LED	Teceo 24 LED 500mA	40 Watts	6.00 Metres	Galvanised Steel	
Y	10	STREET LIGHTING	GILBEY ROAD SOUTH	GRIMSBY	525789.5	410182.4	1993		49258	1 Urbis LED	Teceo 24 LED 500mA	40 Watts	6.00 Metres	Galvanised Steel	
Y	11	STREET LIGHTING	GILBEY ROAD SOUTH	GRIMSBY	525754.94	410184.42	1993		49259	1 Urbis LED	Teceo 24 LED 500mA	40 Watts	6.00 Metres	Galvanised Steel	
Y	12	STREET LIGHTING	GILBEY ROAD SOUTH	GRIMSBY	525733.93	410207.53	1993		49260	1 Urbis LED	Teceo 24 LED 500mA	40 Watts	6.00 Metres	Galvanised Steel	
Y	13	STREET LIGHTING	GILBEY ROAD SOUTH	GRIMSBY	525705.3	410206.81	1993		49261	1 Urbis LED	Teceo 24 LED 500mA	40 Watts	6.00 Metres	Galvanised Steel	
Y	14	STREET LIGHTING	GILBEY ROAD SOUTH	GRIMSBY	525681.12	410230.79	1993		49262	1 Urbis LED	Teceo 24 LED 500mA	40 Watts	6.00 Metres	Galvanised Steel	
Y	15	STREET LIGHTING	GILBEY ROAD SOUTH	GRIMSBY	525648.97	410232.19	1993		49263	1 Urbis LED	Teceo 24 LED 500mA	40 Watts	6.00 Metres	Galvanised Steel	
Y	16	STREET LIGHTING	GILBEY ROAD SOUTH	GRIMSBY	525629.23	410254.4	1993		49264	1 Urbis LED	Teceo 24 LED 500mA	40 Watts	6.00 Metres	Galvanised Steel	
Y	17	STREET LIGHTING	GILBEY ROAD SOUTH	GRIMSBY	525595.63	410255.86	1993		49265	1 Urbis LED	Teceo 24 LED 500mA	40 Watts	6.00 Metres	Galvanised Steel	
Y	1	STREET LIGHTING	HARDYS ROAD FOOTPATH	CLEETHORPES	530968.9	407644.96	2014		50168	Urbis	Axia 16 LED 350mA	19 Watts	6.00 Metres	Galvanised Steel	
Y	1	STREET LIGHTING	HARRINGTON STREET FOOTPATH	CLEETHORPES	528881.96	410218.11	1986		50272	Urbis	Axia 8 LED 350mA	10 Watts	5.00 Metres	Galvanised Steel	
Y	2	STREET LIGHTING	HARRINGTON STREET FOOTPATH	CLEETHORPES	528922.8	410204.04	1964		50273	Urbis	Axia 8 LED 350mA	10 Watts	5.00 Metres	Galvanised Steel	
Y	3	STREET LIGHTING	HARRINGTON STREET FOOTPATH	CLEETHORPES	528970.47	410188.93	1964		50274	Urbis	Axia 8 LED 350mA	10 Watts	5.00 Metres	Galvanised Steel	
Y	4	STREET LIGHTING	HARRINGTON STREET FOOTPATH	CLEETHORPES	529002.57	410173.65	1964		50275	Urbis	Axia 8 LED 350mA	10 Watts	5.00 Metres	Galvanised Steel	
Y	5	STREET LIGHTING	HARRINGTON STREET FOOTPATH	CLEETHORPES	528911.91	410183.25	1986		61642	Thorn		8 Watts	5.00 Metres	Unknown	
Y	6	STREET LIGHTING	HARRINGTON STREET FOOTPATH	CLEETHORPES	528923.74	410177.51	1986		61643	Thorn		8 Watts	5.00 Metres	Unknown	
Y	7	STREET LIGHTING	HARRINGTON STREET FOOTPATH	CLEETHORPES	528956.53	410161.99	1986		61644	Thorn		8 Watts	5.00 Metres	Unknown	
Y	8	STREET LIGHTING	HARRINGTON STREET FOOTPATH	CLEETHORPES	528996.71	410210.89	1986		50276	Deluce		21 Watts	5.00 Metres	Unknown	
Y	9	STREET LIGHTING	HARRINGTON STREET FOOTPATH	CLEETHORPES	528928.89	410231.92	1986		61645	Thorn		8 Watts	5.00 Metres	Unknown	
Y	1	STREET LIGHTING	HAYLING MERE F/P W/H FA	CLEETHORPES	530893.86	406278.54	1994		50438	Urbis	Axia 16 LED 350mA	19 Watts	5.00 Metres	Galvanised Steel	
Y	2	STREET LIGHTING	HAYLING MERE F/P W/H FA	CLEETHORPES	530916.9	406290.82	1994		50439	Urbis	Axia 16 LED 350mA	19 Watts	5.00 Metres	Galvanised Steel	
Y	1	STREET LIGHTING	HEWITTS CIRCUS ROUNDABOUT	CLEETHORPES	529576.06	406782.99	1973		63007	1 Urbis LED	Teceo 48 LED 700mA	104 Watts	10.00 Metres	Galvanised Steel	
Y	2	STREET LIGHTING	HEWITTS CIRCUS ROUNDABOUT	CLEETHORPES	529590.8	406773.62	1973		50642	1 Urbis LED	Teceo 48 LED 700mA	104 Watts	10.00 Metres	Galvanised Steel	
Y	2	STREET LIGHTING	HEWITTS CIRCUS ROUNDABOUT	CLEETHORPES	529590.81	406773.62	1973		63008	1 Urbis LED	Teceo 48 LED 700mA	104 Watts	10.00 Metres	Galvanised Steel	
Y	3	STREET LIGHTING	HEWITTS CIRCUS ROUNDABOUT	CLEETHORPES	529601.94	406751.34	1973		50643	1 Urbis LED	Teceo 48 LED 700mA	104 Watts	10.00 Metres	Galvanised Steel	
Y	4	STREET LIGHTING	HEWITTS CIRCUS ROUNDABOUT	CLEETHORPES	529589.99	406732.71	1973		50644	1 Urbis LED	Teceo 48 LED 700mA	104 Watts	10.00 Metres	Galvanised Steel	
Y	4	STREET LIGHTING	HEWITTS CIRCUS ROUNDABOUT	CLEETHORPES	529589.99	406732.71	1973		63009	1 Urbis LED	Teceo 48 LED 700mA	104 Watts	10.00 Metres	Galvanised Steel	
Y	5	STREET LIGHTING	HEWITTS CIRCUS ROUNDABOUT	CLEETHORPES	529573.88	406725.92	1973		50645	1 Urbis LED	Teceo 48 LED 700mA	104 Watts	10.00 Metres	Galvanised Steel	
Y	6	STREET LIGHTING	HEWITTS CIRCUS ROUNDABOUT	CLEETHORPES	529552.93	406734.83	1973		61657	1 Urbis LED	Teceo 48 LED 700mA	104 Watts	10.00 Metres	Galvanised Steel	
Y	6	STREET LIGHTING	HEWITTS CIRCUS ROUNDABOUT	CLEETHORPES	529552.93	406734.83	1973		62189	1 Urbis LED	Teceo 48 LED 700mA	104 Watts	10.00 Metres	Galvanised Steel	
Y	7	STREET LIGHTING	HEWITTS CIRCUS ROUNDABOUT	CLEETHORPES	529546.45	406756.91	1973		50646	1 Urbis LED	Teceo 48 LED 700mA	104 Watts	10.00 Metres	Galvanised Steel	
Y	8	STREET LIGHTING	HEWITTS CIRCUS ROUNDABOUT	CLEETHORPES	529558.19	406775.85	1973		61658	1 Urbis LED	Teceo 48 LED 700mA	104 Watts	10.00 Metres	Galvanised Steel	
Y	8	STREET LIGHTING	HEWITTS CIRCUS ROUNDABOUT	CLEETHORPES	529558.91	406775.85	1973		62190	1 Urbis LED	Teceo 48 LED 700mA	104 Watts	10.00 Metres	Galvanised Steel	
Y	3	STREET LIGHTING	FOOTPATH FROM HILDA STREET TO	GRIMSBY	528230.1	410101.1	1963		50821	Urbis	Axia 16 LED 350mA	19 Watts	5.00 Metres	Steel	
Y	4	STREET LIGHTING	FOOTPATH FROM HILDA STREET TO	GRIMSBY	528221.63	410077.37	2014		50822	Urbis	Axia 16 LED 350mA	19 Watts	6.00 Metres	Galvanised Steel	
Y	5	STREET LIGHTING	FOOTPATH FROM HILDA STREET TO	GRIMSBY	528213.15	410052.69	1963		50823	Urbis	Axia 16 LED 350mA	19 Watts	5.00 Metres	Steel	
Y	1	STREET LIGHTING	HILDYARD STREET FOOTPATH	GRIMSBY	528546.16	409857.41	1968		50845	Urbis	Axia 8 LED 350mA	10 Watts	5.00 Metres	Steel	
Y	2	STREET LIGHTING	HILDYARD STREET FOOTPATH	GRIMSBY	528557.8	409895.89	1968		50846	Urbis	Axia 8 LED 350mA	10 Watts	5.00 Metres	Steel	
Y	3	STREET LIGHTING	HILDYARD STREET FOOTPATH	GRIMSBY	528571.6	409859.56	1968		50847	1 Urbis LED	Axia 16 LED 500mA	28 Watts	5.00 Metres	Steel	
Y	4	STREET LIGHTING	HILDYARD STREET FOOTPATH	GRIMSBY	528569.58	409879.94	1968		50848	Urbis	Axia 8 LED 350mA	10 Watts	5.00 Metres	Steel	
Y	5	STREET LIGHTING	HILDYARD STREET FOOTPATH	GRIMSBY	528599.19	409890.76	1968		50849	Urbis	Axia 8 LED 350mA	10 Watts	5.00 Metres	Steel	
Y	6	STREET LIGHTING	HILDYARD STREET FOOTPATH	GRIMSBY	528594.13	409876.53	1968		50850	Urbis	Axia 8 LED 350mA	10 Watts	5.00 Metres	Steel	
Y	7	STREET LIGHTING	HILDYARD STREET FOOTPATH	GRIMSBY	528597.55	409847.16	1985		50851	Urbis	Axia 8 LED 350mA	10 Watts	6.00 Metres	Galvanised Steel	
Y	8	STREET LIGHTING	HILDYARD STREET FOOTPATH	GRIMSBY	528611.22	409865.96	1968		50852	Urbis	Axia 8 LED 350mA	10 Watts	5.00 Metres	Steel	
Y	9	STREET LIGHTING	HILDYARD STREET FOOTPATH	GRIMSBY	528631.09	409866.53	1968		50853	Urbis	Axia 8 LED 350mA	10 Watts	5.00 Metres	Steel	
Y	10	STREET LIGHTING	HILDYARD STREET FOOTPATH	GRIMSBY	528629.07	409842.67	1985		50854	1 Urbis LED	Axia 16 LED 500mA	28 Watts	6.00 Metres	Galvanised Steel	
Y	11	STREET LIGHTING	HILDYARD STREET FOOTPATH	GRIMSBY	528646.16	409865.33	1968		50855	Urbis	Axia 8 LED 350mA	10 Watts	5.00 Metres	Steel	
Y	12	STREET LIGHTING	HILDYARD STREET FOOTPATH	GRIMSBY	528646.92	409825.96	1968		50856	Urbis	Axia 8 LED 350mA	10 Watts	5.00 Metres	Steel	
Y	13	STREET LIGHTING	HILDYARD STREET FOOTPATH	GRIMSBY	528648.82	409776.66	1968		50857	Urbis	Axia 8 LED 350mA	10 Watts	5.00 Metres	Steel	
Y	14	STREET LIGHTING	HILDYARD STREET FOOTPATH	GRIMSBY	528647.68	409745.65	1968		50858	Urbis	Axia 8 LED 350mA	10 Watts	5.00 Metres	Steel	
Y	1	STREET LIGHTING	HUNTERS CLOSE FOOTPATH	GRIMSBY	523316.93	410029.42	1994		51232	Urbis	Axia 8 LED 350mA	10 Watts	5.00 Metres	Galvanised Steel	
Y	2	STREET LIGHTING	HUNTERS CLOSE FOOTPATH	GRIMSBY	523338.2	410047.9	1994		51233	Urbis	Axia 8 LED 350mA	10 Watts	5.00 Metres	Galvanised Steel	
Y	3	STREET LIGHTING	HUNTERS CLOSE FOOTPATH	GRIMSBY	523347.19	410074.96	2009		51234	Urbis	Axia 8 LED 350mA	10 Watts	6.00 Metres	Steel	
Y	4	STREET LIGHTING	HUNTERS CLOSE FOOTPATH	GRIMSBY	523333.64	410098.91	1994		51235	Urbis	Axia 8 LED 350mA	10 Watts	5.00 Metres	Galvanised Steel	
Y	5	STREET LIGHTING	HUNTERS CLOSE FOOTPATH	GRIMSBY	523354.78	410079.86	1994		51236	Urbis	Axia 8 LED 350mA	10 Watts	5.00 Metres	Galvanised Steel	
Y	1	STREET LIGHTING	ISAACS HILL ROUNDABOUT	CLEETHORPES	530226.64	408948.52	1995		51369	1 Urbis LED	Teceo 48 LED 700mA	104 Watts	12.00 Metres	Galvanised Steel	
Y	2	STREET LIGHTING	ISAACS HILL ROUNDABOUT	CLEETHORPES	530235.12	408926.44	1995		51370	1 Urbis LED	Teceo 48 LED 700mA	104 Watts	12.00 Metres	Galvanised Steel	
Y	2	STREET LIGHTING	ISAACS HILL ROUNDABOUT	CLEETHORPES	530235.12	408926.44	1995		63013	1 Urbis LED	Teceo 48 LED 700mA	104 Watts	12.00 Metres	Galvanised Steel	
Y	3	STREET LIGHTING	ISAACS HILL ROUNDABOUT	CLEETHORPES	530222.85	408911.82	1995		51371	1 Urbis LED	Teceo 48 LED 700mA	104 Watts	12.00 Metres	Galvanised Steel	
Y	4	STREET LIGHTING	ISAACS HILL ROUNDABOUT	CLEETHORPES	530201.58	408919.29	1995		51372	1 Urbis LED	Teceo 48 LED 700mA	104 Watts	12.00 Metres	Galvanised Steel	
Y	4	STREET LIGHTING	ISAACS HILL ROUNDABOUT	CLEETHORPES	530201.58	408919.29	1995		63014	1 Urbis LED	Teceo 48 LED 700mA	104 Watts	12.00 Metres	Galvanised Steel	
Y	5	STREET LIGHTING	ISAACS HILL ROUNDABOUT	CLEETHORPES	530195.51	408935.8	1995		51373	1 Urbis LED	Teceo 48 LED 700mA	104 Watts	12.00 Metres	Galvanised Steel	
Y	6	STREET LIGHTING	ISAACS HILL ROUNDABOUT	CLEETHORPES	530209.05	408948.52	1992		51374	1 Urbis LED	Teceo 48 LED 700mA	104 Watts	12.00 Metres	Galvanised Steel	
Y	6	STREET LIGHTING	ISAACS HILL ROUNDABOUT	CLEETHORPES	530209.05	408948.52	1992		63015	1 Urbis LED	Teceo 48 LED 700mA	104 Watts	12.00 Metres	Galvanised Steel	
Y	1	STREET LIGHTING	JOHN STREET FOOTPATH	GRIMSBY	528146.98	410223.18	1998		51443	Urbis	Axia 16 LED 350mA	19 Watts	5.00 Metres	Galvanised Steel	
Y	2	STREET LIGHTING	JOHN STREET FOOTPATH	GRIMSBY	528121.25	410231.08	1998		51444	Urbis	Axia 16 LED 350mA	19 Watts	5.00 Metres	Galvanised Steel	
Y	3	STREET LIGHTING	JOHN STREET FOOTPATH	GRIMSBY	528081.97	410242.42	1998		51445	Urbis	Axia 16 LED 350mA	19 Watts	5.00 Metres	Galvanised Steel	
Y	4	STREET LIGHTING	JOHN STREET FOOTPATH	GRIMSBY	528049.21	410239.75	1998		51446	Urbis	Axia 16 LED 350mA	19 Watts	5.00 Metres	Galvanised Steel	
Y	5	STREET LIGHTING	JOHN STREET FOOTPATH	GRIMSBY	528012.42	410247.01	1998		51447	Urbis	Axia 16 LED 350mA	19 Watts	5.00 Metres	Galvanised Steel	
Y	1	STREET LIGHTING	KEIR HARDIE LINK	GRIMSBY	527068.37	409117	2015	30/07/2015	51486	Urbis	Axia 16 LED 350mA	19 Watts	6.00 Metres	Galvanised Steel	
Y	2	STREET LIGHTING	KEIR HARDIE LINK	GRIMSBY	527054.93	409124.46	2015	30/07/2015	51487	Urbis	Axia 16 LED 350mA	19 Watts	6.00 Metres	Galvanised Steel	
Y	1	STREET LIGHTING	KEIR HARDIE SERVICE ROAD	GRIMSBY	527004.17	409136.8	1968		51488	Urbis	Axia 16 LED 350mA	19 Watts	5.00 Metres	Steel	
Y	2	STREET LIGHTING	KEIR HARDIE SERVICE ROAD	GRIMSBY	527034.42	409139.34	1968		51489	Urbis	Axia 16 LED 350mA	19 Watts	5.00 Metres	Steel	
Y	1	STREET LIGHTING	KINGS RD/PAVILLION ACC	CLEETHORPES	531792.12	407255.22	1985		51714	1 Urbis LED	Teceo 40 LED 500mA	64 Watts	8.00 Metres	Galvanised Steel	
Y	1	STREET LIGHTING	KINGS ROAD M/R/A	CLEETHORPES	531783.02	407255.98	1993		51829	1 Urbis LED	Teceo 40 LED 500mA	64 Watts	8.00 Metres	Galvanised Steel	
Y	2	STREET LIGHTING	KINGS ROAD M/R/A	CLEETHORPES	531792.64	407241.42	1993		51830	1 Urbis LED	Teceo 40 LED 500mA	64 Watts	8.00 Metres	Galvanised Steel	
Y	3	STREET LIGHTING	KINGS ROAD M/R/A	CLEETHORPES	531774.67	407236.36	1993		51831	1 Urbis LED	Teceo 40 LED 500mA	64 Watts	8.00 Metres	Galvanised Steel	
Y	4	STREET LIGHTING	KINGS ROAD M/R/A	CLEETHORPES	531768.09	407252.81	2014		51832	1 Urbis LED	Teceo 40 LED 500mA	64 Watts	8.00 Metres	Galvanised Steel	
Y	1	STREET LIGHTING	KINGS ROAD NORTH SEA LANE	CLEETHORPES	532319.98	406312.07	1985		51833	1 Urbis LED	Teceo 48 LED 500mA	79 Watts	10.00 Metres	Galvanised Steel	
Y	2	STREET LIGHTING	KINGS ROAD NORTH SEA LANE	CLEETHORPES	532316.74	406337.29	1985		51834	1 Urbis LED	Teceo 48 LED 500mA	79 Watts	10.00 Metres	Galvanised Steel	
Y	3	STREET LIGHTING	KINGS ROAD NORTH SEA LANE	CLEETHORPES	532294.42	406330.61	1985		51835	1 Urbis LED	Teceo 48 LED 500mA	79 Watts	14.00 Metres	Galvanised Steel	
Y	1	STREET LIGHTING	LITTLEFIELD LANE ALLOTMENTS	GRIMSBY	525760.9	408876.19	2014		52721	1 Urbis LED	Axia 16 LED 500mA	28 Watts	6.00 Metres	Galvanised Steel	
Y	2	STREET LIGHTING	LITTLEFIELD LANE ALLOTMENTS	GRIMSBY	525761.61	408845.22	2014		66286	1 Urbis LED	Axia 16 LED 500mA	28 Watts	6.00 Metres	Galvanised Steel	
Y	3	STREET LIGHTING	LITTLEFIELD LANE ALLOTMENTS	GRIMSBY	525758.2	408810.38	2014		66287	1 Urbis LED	Axia 16 LED 500mA	28 Watts	6.00 Metres	Galvanised Steel	
Y	4	STREET LIGHTING	LITTLEFIELD LANE ALLOTMENTS	GRIMSBY	525755.3	408770.85	2014		66288	1 Urbis LED	Axia 16 LED 500mA	28 Watts	6.00 Metres	Galvanised Steel	
Y	5	STREET LIGHTING	LITTLEFIELD LANE ALLOTMENTS	GRIMSBY	525753.2	408736.99	2014		66289	1 Urbis LED	Axia 16 LED 500mA	28 Watts	6.00 Metres	Galvanised Steel	
Y	6	STREET LIGHTING	LITTLEFIELD LANE ALLOTMENTS	GRIMSBY	525750.21	408698.63	2014		66290	1 Urbis LED	Axia 16 LED 500mA	28 Watts	6.00 Metres	Galvanised Steel	
Y	7	STREET LIGHTING	LITTLEFIELD LANE ALLOTMENTS	GRIMSBY	525748.17	408668.96	2014		66291	1 Urbis LED	Axia 16 LED 500mA	28 Watts	6.00 Metres	Galvanised Steel	
Y	8	STREET LIGHTING	LITTLEFIELD LANE ALLOTMENTS	GRIMSBY	525753.91	408640.02	2014		66292	1 Urbis LED	Axia 16 LED 500mA	28 Watts	6.00 Metres	Galvanised Steel	
Y	9	STREET LIGHTING	LITTLEFIELD LANE ALLOTMENTS	GRIMSBY	525751.97	408606.02	2006		62976	1 Urbis LED	Axia 16 LED 500mA	28 Watts	6.00 Metres	Steel	
Y	10	STREET LIGHTING	LITTLEFIELD LANE ALLOTMENTS	GRIMSBY	525749.15	408541.74	2006		62977	1 Urbis LED	Axia 16 LED 500mA	28 Watts	6.00 Metres	Steel	
Y	11	STREET LIGHTING	LITTLEFIELD LANE ALLOTMENTS	GRIMSBY	525745.7	408475.97	2006		62978	1 Urbis LED	Axia 16 LED 500mA	28 Watts	6.00 Metres	Steel	
Y	12	STREET LIGHTING	LITTLEFIELD LANE ALLOTMENTS	GRIMSBY	525743.09	408412.18	2006		62979	1 Urbis LED	Axia 16 LED 500mA	28 Watts	6.00 Metres	Steel	
Y	1	STREET LIGHTING	LOCKHILL ROUNDABOUT	GRIMSBY	527225.38	410369.6	2006		52733	1 Urbis LED	Ampera 48 LED 700mA	104 Watts	12.00 Metres	Galvanised Steel	
Y	2	STREET LIGHTING	LOCKHILL ROUNDABOUT	GRIMSBY	527197.28	410369.72	2006		52734	1 Urbis LED	Ampera 48 LED 700mA	104 Watts	12.00 Metres	Galvanised Steel	
Y	3	STREET LIGHTING	LOCKHILL ROUNDABOUT	GRIMSBY	527185.89	410393.01	2006		52735	1 Urbis LED	Ampera 48 LED 700mA	104 Watts	12.00 Metres	Galvanised Steel	
Y	4	STREET LIGHTING	LOCKHILL ROUNDABOUT	GRIMSBY	527187.95	410420.9	2006		52736	1 Urbis LED	Ampera 48 LED 700mA	104 Watts	12.00 Metres	Galvanised Steel	
Y	5	STREET LIGHTING	LOCKHILL ROUNDABOUT	GRIMSBY	527221.33	410430.86	2006		52737	1 Urbis LED	Ampera 48 LED 700mA	104 Watts	12.00 Metres	Galvanised Steel	
Y	6	STREET LIGHTING	LOCKHILL ROUNDABOUT	GRIMSBY	527243.1	410422.51	2006		52738	1 Urbis LED	Ampera 48 LED 700mA	104 Watts	12.00 Metres	Galvanised Steel	
Y	7	STREET LIGHTING	LOCKHILL ROUNDABOUT	GRIMSBY	527247.99	410401.24			70190						
Y	8	STREET LIGHTING	LOCKHILL ROUNDABOUT	GRIMSBY	527246.65	410381.75	2006		52740	1 Urbis LED	Ampera 48 LED 700mA	104 Watts	12.00 Metres	Galvanised Steel	

Y	1	STREET LIGHTING	SCARTHO FORK ROUNDABOUT	GRIMSBY	526479.75	406323.72	1955		61897	1 Urbis LED	Teceo 40 LED 500mA	64 Watts	10.00 Metres	Steel	
Y	1	STREET LIGHTING	SCARTHO FORK ROUNDABOUT	GRIMSBY	526479.75	406323.72	1955		62431	1 Urbis LED	Teceo 40 LED 500mA	64 Watts	10.00 Metres	Steel	
Y	2	STREET LIGHTING	SCARTHO FORK ROUNDABOUT	GRIMSBY	526468.61	406342.14	1955		56644	1 Urbis LED	Teceo 40 LED 500mA	64 Watts	10.00 Metres	Steel	
Y	3	STREET LIGHTING	SCARTHO FORK ROUNDABOUT	GRIMSBY	526485.07	406357.9	1955		61898	1 Urbis LED	Teceo 40 LED 500mA	64 Watts	10.00 Metres	Steel	
Y	3	STREET LIGHTING	SCARTHO FORK ROUNDABOUT	GRIMSBY	526485.07	406357.9	1955		62432	1 Urbis LED	Teceo 40 LED 500mA	64 Watts	10.00 Metres	Steel	
Y	4	STREET LIGHTING	SCARTHO FORK ROUNDABOUT	GRIMSBY	526506.46	406350.81	1955		56645	1 Urbis LED	Teceo 40 LED 500mA	64 Watts	10.00 Metres	Steel	
Y	5	STREET LIGHTING	SCARTHO FORK ROUNDABOUT	GRIMSBY	526507.92	406331.77	1955		61899	1 Urbis LED	Teceo 40 LED 500mA	64 Watts	10.00 Metres	Steel	
Y	5	STREET LIGHTING	SCARTHO FORK ROUNDABOUT	GRIMSBY	526507.92	406331.77	1955		62433	1 Urbis LED	Teceo 40 LED 500mA	64 Watts	10.00 Metres	Steel	
Y	6	STREET LIGHTING	SCARTHO FORK ROUNDABOUT	GRIMSBY	526495.57	406319.61	2008		56646	1 Urbis LED	Teceo 40 LED 500mA	64 Watts	12.00 Metres	Steel	
Y	1	STREET LIGHTING	LOVE LANE CORNER ROUNDABOUT	GRIMSBY	528955.06	408104.19	1976		61786	1 Urbis LED	Teceo 48 LED 500mA	79 Watts	12.00 Metres	Galvanised Steel	
Y	1	STREET LIGHTING	LOVE LANE CORNER ROUNDABOUT	GRIMSBY	528955.06	408104.19	1976		62318	1 Urbis LED	Teceo 48 LED 500mA	79 Watts	12.00 Metres	Galvanised Steel	
Y	2	STREET LIGHTING	LOVE LANE CORNER ROUNDABOUT	GRIMSBY	528958.93	408082.83	1976		52930	1 Urbis LED	Teceo 48 LED 500mA	79 Watts	12.00 Metres	Galvanised Steel	
Y	3	STREET LIGHTING	LOVE LANE CORNER ROUNDABOUT	GRIMSBY	528944.01	408067.73	1976		61787	1 Urbis LED	Teceo 48 LED 500mA	79 Watts	12.00 Metres	Galvanised Steel	
Y	3	STREET LIGHTING	LOVE LANE CORNER ROUNDABOUT	GRIMSBY	528944.01	408067.73	1976		62319	1 Urbis LED	Teceo 48 LED 500mA	79 Watts	12.00 Metres	Galvanised Steel	
Y	4	STREET LIGHTING	LOVE LANE CORNER ROUNDABOUT	GRIMSBY	528919.16	408070.4	1976		52931	1 Urbis LED	Teceo 48 LED 500mA	79 Watts	12.00 Metres	Steel	
Y	5	STREET LIGHTING	LOVE LANE CORNER ROUNDABOUT	GRIMSBY					70246						
Y	6	STREET LIGHTING	LOVE LANE CORNER ROUNDABOUT	GRIMSBY	528915.84	408108.24	1976		52932	1 Urbis LED	Teceo 48 LED 500mA	79 Watts	12.00 Metres	Steel	
Y	7	STREET LIGHTING	LOVE LANE CORNER ROUNDABOUT	GRIMSBY	528937.39	408115.05	1976		52933	1 Urbis LED	Teceo 48 LED 500mA	79 Watts	12.00 Metres	Galvanised Steel	
Y	1	STREET LIGHTING	LOVEDEN COURT FOOTPATH	CLEETHORPES	531080.19	407373.12	2013		52939	Urbis	Axia 16 LED 350mA	19 Watts	6.00 Metres	Galvanised Steel	
Y	1	STREET LIGHTING	LOVETT STREET FOOTPATH	CLEETHORPES	529218.69	410117.75	1989		52951	Urbis	Axia 8 LED 350mA	10 Watts	5.00 Metres	Galvanised Steel	
Y	2	STREET LIGHTING	LOVETT STREET FOOTPATH	CLEETHORPES	529198.24	410075.94	1989		52952	Urbis	Axia 8 LED 350mA	10 Watts	5.00 Metres	Galvanised Steel	
Y	3	STREET LIGHTING	LOVETT STREET FOOTPATH	CLEETHORPES	529179.73	410038.34	1989		52953	Urbis	Axia 8 LED 350mA	10 Watts	5.00 Metres	Galvanised Steel	
Y	4	STREET LIGHTING	LOVETT STREET FOOTPATH	CLEETHORPES	529154.14	409983.72	1989		52954	Urbis	Axia 8 LED 350mA	10 Watts	5.00 Metres	Galvanised Steel	
Y	7	STREET LIGHTING	LOVETT STREET FOOTPATH	CLEETHORPES	529177.85	410086.72	1989		61791	Thorn		8 Watts	5.00 Metres	Unknown	
Y	1	STREET LIGHTING	MAXWELL COURT FOOTPATH	GRIMSBY	523541.98	408081.32	1984		53427	Phosco		36 Watts	6.00 Metres	Galvanised Steel	
Y	1	STREET LIGHTING	MILTON ROAD ROUNDABOUT	GRIMSBY	525978.9	407796.29	1992		53739	1 Urbis LED	Teceo 40 LED 500mA	64 Watts	8.00 Metres	Galvanised Steel	
Y	2	STREET LIGHTING	MILTON ROAD ROUNDABOUT	GRIMSBY	525981.18	407777.56	1992		53740	1 Urbis LED	Teceo 40 LED 500mA	64 Watts	8.00 Metres	Galvanised Steel	
Y	3	STREET LIGHTING	MILTON ROAD ROUNDABOUT	GRIMSBY	525960.04	407766.23	1992		53741	1 Urbis LED	Teceo 40 LED 500mA	64 Watts	8.00 Metres	Galvanised Steel	
Y	4	STREET LIGHTING	MILTON ROAD ROUNDABOUT	GRIMSBY	525956.25	407787.12	1992		53742	1 Urbis LED	Teceo 40 LED 500mA	64 Watts	8.00 Metres	Galvanised Steel	
Y	1	STREET LIGHTING	MONTAGUE STREET FOOTPATH	CLEETHORPES	528971.64	410105.66	1964		53771	Urbis	Axia 8 LED 350mA	10 Watts	5.00 Metres	Galvanised Steel	
Y	2	STREET LIGHTING	MONTAGUE STREET FOOTPATH	CLEETHORPES	528949.86	410116.9	1989		53772	Urbis	Axia 8 LED 350mA	10 Watts	5.00 Metres	Galvanised Steel	
Y	3	STREET LIGHTING	MONTAGUE STREET FOOTPATH	CLEETHORPES	528958.06	410134.82	1989		62343	Fusion		11 Watts	5.00 Metres	Unknown	
Y	4	STREET LIGHTING	MONTAGUE STREET FOOTPATH	CLEETHORPES	528929.95	410105.54	1989		61812	Urbis	Axia 8 LED 350mA	10 Watts	5.00 Metres	Unknown	
Y	5	STREET LIGHTING	MONTAGUE STREET FOOTPATH	CLEETHORPES	528909.21	410137.69	1989		53773	Urbis	Axia 8 LED 350mA	10 Watts	5.00 Metres	Galvanised Steel	
Y	6	STREET LIGHTING	MONTAGUE STREET FOOTPATH	CLEETHORPES	528910.5	410157.54	1989		61813	Thorn		8 Watts	5.00 Metres	Unknown	
Y	7	STREET LIGHTING	MONTAGUE STREET FOOTPATH	CLEETHORPES	528865.99	410157.43	1989		53774	Urbis	Axia 8 LED 350mA	10 Watts	5.00 Metres	Galvanised Steel	
Y	8	STREET LIGHTING	MONTAGUE STREET FOOTPATH	CLEETHORPES	528857.8	410141.09	1989		61814	Thorn		8 Watts	5.00 Metres	Unknown	
Y	1	STREET LIGHTING	MONTGOMERY ROAD FOOTPATH	CLEETHORPES	529587.9	408278.52	2012		53784	Urbis	Axia 8 LED 350mA	10 Watts	6.00 Metres	Steel	
Y	2	STREET LIGHTING	MONTGOMERY ROAD FOOTPATH	CLEETHORPES	529589.93	408250.36	2018	02/10/2018	67168	Urbis	Axia 16 LED 350mA	19 Watts	6.00 Metres	Steel	
Y	1	STREET LIGHTING	MOODY M/R/A	GRIMSBY	525885.82	411030.01	2019	25/04/2019	67418	Urbis	Teceo 48 LED 500mA	79 Watts	10.00 Metres	Galvanised Steel	
Y	2	STREET LIGHTING	MOODY M/R/A	GRIMSBY	525860.05	411039.19	2019	25/04/2019	67419	Urbis	Teceo 48 LED 500mA	79 Watts	10.00 Metres	Galvanised Steel	
Y	3	STREET LIGHTING	MOODY M/R/A	GRIMSBY	525890.31	411053.45	2019	25/04/2019	67420	Urbis	Teceo 48 LED 500mA	79 Watts	10.00 Metres	Galvanised Steel	
Y	1	STREET LIGHTING	NORMANDY ROAD FOOTPATH	CLEETHORPES	529719.38	408550.29	2014		54210	Urbis	Axia 8 LED 350mA	10 Watts	6.00 Metres	Galvanised Steel	
Y	2	STREET LIGHTING	NORMANDY ROAD FOOTPATH	CLEETHORPES	529699.73	408578.39	2014		54211	Urbis	Axia 8 LED 350mA	10 Watts	6.00 Metres	Galvanised Steel	
Y	1	STREET LIGHTING	NORWICH AVE FOOTPATH	GRIMSBY	525376.25	407952.39	1989		54284	Urbis	Axia 8 LED 350mA	10 Watts	6.00 Metres	Galvanised Steel	
Y	2	STREET LIGHTING	NORWICH AVE FOOTPATH	GRIMSBY	525416.16	407966.38	1989		54285	Urbis	Axia 8 LED 350mA	10 Watts	6.00 Metres	Galvanised Steel	
Y	1	STREET LIGHTING	NUNS CORNER ROUNDABOUT	GRIMSBY	526466.29	407879.65	1993		61878	1 Urbis LED	Teceo 48 LED 500mA	79 Watts	12.00 Metres	Galvanised Steel	
Y	1	STREET LIGHTING	NUNS CORNER ROUNDABOUT	GRIMSBY	526466.29	407879.65	1993		62410	1 Urbis LED	Teceo 48 LED 500mA	79 Watts	12.00 Metres	Galvanised Steel	
Y	2	STREET LIGHTING	NUNS CORNER ROUNDABOUT	GRIMSBY	526460.91	407854.79	1993		54288	1 Urbis LED	Teceo 48 LED 500mA	79 Watts	12.00 Metres	Galvanised Steel	
Y	3	STREET LIGHTING	NUNS CORNER ROUNDABOUT	GRIMSBY	526443.69	407849.73	1993		61879	1 Urbis LED	Teceo 48 LED 500mA	79 Watts	12.00 Metres	Galvanised Steel	
Y	3	STREET LIGHTING	NUNS CORNER ROUNDABOUT	GRIMSBY	526443.69	407849.73	1993		62411	1 Urbis LED	Teceo 48 LED 500mA	79 Watts	12.00 Metres	Galvanised Steel	
Y	4	STREET LIGHTING	NUNS CORNER ROUNDABOUT	GRIMSBY	526423.44	407857.32	2014		54289	1 Urbis LED	Teceo 48 LED 500mA	79 Watts	12.00 Metres	Galvanised Steel	
Y	5	STREET LIGHTING	NUNS CORNER ROUNDABOUT	GRIMSBY	526419.59	407875.55	1993		61880	1 Urbis LED	Teceo 48 LED 500mA	79 Watts	12.00 Metres	Galvanised Steel	
Y	5	STREET LIGHTING	NUNS CORNER ROUNDABOUT	GRIMSBY	526419.59	407875.55	1993		62412	1 Urbis LED	Teceo 48 LED 500mA	79 Watts	12.00 Metres	Galvanised Steel	
Y	6	STREET LIGHTING	NUNS CORNER ROUNDABOUT	GRIMSBY	526427.49	407892.66	1993		54290	1 Urbis LED	Teceo 48 LED 500mA	79 Watts	12.00 Metres	Galvanised Steel	
Y	7	STREET LIGHTING	NUNS CORNER ROUNDABOUT	GRIMSBY	526450.99	407897.73	1993		54291	1 Urbis LED	Teceo 48 LED 500mA	79 Watts	12.00 Metres	Galvanised Steel	
Y	1	STREET LIGHTING	OLD CLEETHORPES ROAD	GRIMSBY	527270.94	410371.01	2014	10/11/2014	62972	1 Urbis LED	Teceo 24 LED 500mA	40 Watts	8.00 Metres	Galvanised Steel	
Y	2	STREET LIGHTING	OLD CLEETHORPES ROAD	GRIMSBY	527299.67	410397.22	2014	10/11/2014	62971	1 Urbis LED	Teceo 24 LED 500mA	40 Watts	8.00 Metres	Galvanised Steel	
Y	3	STREET LIGHTING	OLD CLEETHORPES ROAD	GRIMSBY	527326.82	410407.15	2014	10/11/2014	54368	1 Urbis LED	Teceo 24 LED 500mA	40 Watts	8.00 Metres	Galvanised Steel	
Y	4	STREET LIGHTING	OLD CLEETHORPES ROAD	GRIMSBY	527351.07	410411.05	2014	10/11/2014	54369	1 Urbis LED	Teceo 24 LED 500mA	40 Watts	8.00 Metres	Galvanised Steel	
Y	5	STREET LIGHTING	OLD CLEETHORPES ROAD	GRIMSBY	527371.83	410421.68	2014	10/11/2014	54370	1 Urbis LED	Teceo 24 LED 500mA	40 Watts	8.00 Metres	Galvanised Steel	
Y	6	STREET LIGHTING	OLD CLEETHORPES ROAD	GRIMSBY	527401.41	410422.78	2014	10/11/2014	54371	1 Urbis LED	Teceo 24 LED 500mA	40 Watts	8.00 Metres	Galvanised Steel	
Y	7	STREET LIGHTING	OLD CLEETHORPES ROAD	GRIMSBY	527432.81	410423.69	2014	10/11/2014	54372	1 Urbis LED	Teceo 24 LED 500mA	40 Watts	8.00 Metres	Galvanised Steel	
Y	8	STREET LIGHTING	OLD CLEETHORPES ROAD	GRIMSBY	527577.06	410431.28	2013		54373	1 Urbis LED	Teceo 24 LED 500mA	40 Watts	8.00 Metres	Steel	
Y	9	STREET LIGHTING	OLD CLEETHORPES ROAD	GRIMSBY	527483.18	410421.18	2014		54374	1 Urbis LED	Teceo 24 LED 500mA	40 Watts	8.00 Metres	Galvanised Steel	
Y	10	STREET LIGHTING	OLD CLEETHORPES ROAD	GRIMSBY	527509.01	410429.35	2014		54375	1 Urbis LED	Teceo 24 LED 500mA	40 Watts	8.00 Metres	Galvanised Steel	
Y	11	STREET LIGHTING	OLD CLEETHORPES ROAD	GRIMSBY	527577.02	410431.66	2014	10/11/2014	54376	1 Urbis LED	Teceo 24 LED 500mA	40 Watts	8.00 Metres	Galvanised Steel	
Y	12	STREET LIGHTING	OLD CLEETHORPES ROAD	GRIMSBY	527605.42	410433.12	2014	10/11/2014	54377	1 Urbis LED	Teceo 24 LED 500mA	40 Watts	8.00 Metres	Galvanised Steel	
Y	13	STREET LIGHTING	OLD CLEETHORPES ROAD	GRIMSBY	527636.94	410434.77	2014	10/11/2014	62973	1 Urbis LED	Teceo 24 LED 500mA	40 Watts	8.00 Metres	Galvanised Steel	
Y	14	STREET LIGHTING	OLD CLEETHORPES ROAD	GRIMSBY	527661.87	410436.98	2014	10/11/2014	62974	1 Urbis LED	Teceo 24 LED 500mA	40 Watts	8.00 Metres	Galvanised Steel	
Y	15	STREET LIGHTING	OLD CLEETHORPES ROAD	GRIMSBY	527688.58	410438.67	2014	10/11/2014	62975	1 Urbis LED	Teceo 24 LED 500mA	40 Watts	8.00 Metres	Galvanised Steel	
Y	1	STREET LIGHTING	ORWELL STREET CAR PARKS	GRIMSBY	527862.06	410479.65	2001		54474	1 Urbis LED	Teceo 40 LED 500mA	64 Watts	10.00 Metres	Galvanised Steel	
Y	2	STREET LIGHTING	ORWELL STREET CAR PARKS	GRIMSBY	527887.14	410474.48	2001		54475	1 Urbis LED	Teceo 40 LED 500mA	64 Watts	10.00 Metres	Galvanised Steel	
Y	3	STREET LIGHTING	ORWELL STREET CAR PARKS	GRIMSBY	527909.1	410469.93	2001		54476	1 Urbis LED	Teceo 40 LED 500mA	64 Watts	10.00 Metres	Galvanised Steel	
Y	4	STREET LIGHTING	ORWELL STREET CAR PARKS	GRIMSBY	527935.62	410464.34	2001		54477	1 Urbis LED	Teceo 40 LED 500mA	64 Watts	10.00 Metres	Galvanised Steel	
Y	5	STREET LIGHTING	ORWELL STREET CAR PARKS	GRIMSBY	527955.88	410450.38	2001		54478	1 Urbis LED	Teceo 40 LED 500mA	64 Watts	10.00 Metres	Galvanised Steel	
Y	6	STREET LIGHTING	ORWELL STREET CAR PARKS	GRIMSBY	527930.97	410444.28	2001		54479	1 Urbis LED	Teceo 40 LED 500mA	64 Watts	10.00 Metres	Galvanised Steel	
Y	7	STREET LIGHTING	ORWELL STREET CAR PARKS	GRIMSBY	527905.02	410449.7	2001		54480	1 Urbis LED	Teceo 40 LED 500mA	64 Watts	10.00 Metres	Galvanised Steel	
Y	8	STREET LIGHTING	ORWELL STREET CAR PARKS	GRIMSBY	527883.37	410454.2	2001		54481	1 Urbis LED	Teceo 40 LED 500mA	64 Watts	10.00 Metres	Galvanised Steel	
Y	9	STREET LIGHTING	ORWELL STREET CAR PARKS	GRIMSBY	527858.29	410459.43	2001		54482	1 Urbis LED	Teceo 40 LED 500mA	64 Watts	10.00 Metres	Galvanised Steel	
Y	10	STREET LIGHTING	ORWELL STREET CAR PARKS	GRIMSBY	527792.6	410494.23	2001		54483	1 Urbis LED	Teceo 40 LED 500mA	64 Watts	10.00 Metres	Galvanised Steel	
Y	11	STREET LIGHTING	ORWELL STREET CAR PARKS	GRIMSBY	527818.14	410488.96	2001		54484	1 Urbis LED	Teceo 40 LED 500mA	64 Watts	10.00 Metres	Galvanised Steel	
Y	12	STREET LIGHTING	ORWELL STREET CAR PARKS	GRIMSBY	527844.6	410475.72	2001		54485	1 Urbis LED	Teceo 40 LED 500mA	64 Watts	10.00 Metres	Galvanised Steel	
Y	13	STREET LIGHTING	ORWELL STREET CAR PARKS	GRIMSBY	527828.17	410465.84	2001		54486	1 Urbis LED	Teceo 40 LED 500mA	64 Watts	10.00 Metres	Galvanised Steel	
Y	14	STREET LIGHTING	ORWELL STREET CAR PARKS	GRIMSBY	527813.64	410468.89	2001		54487	1 Urbis LED	Teceo 40 LED 500mA	64 Watts	10.00 Metres	Galvanised Steel	
Y	15	STREET LIGHTING	ORWELL STREET CAR PARKS	GRIMSBY	527787.95	410474.32	2001		54488	1 Urbis LED	Teceo 40 LED 500mA	64 Watts	10.00 Metres	Galvanised Steel	
Y	1	STREET LIGHTING	PARK STREET ROUNDABOUT	GRIMSBY	528685.42	409437.72	1986		61884	1 Urbis LED	Teceo 48 LED 500mA	79 Watts	10.00 Metres	Galvanised Steel	
Y	1	STREET LIGHTING	PARK STREET ROUNDABOUT	GRIMSBY	528685.42	409437.72	1986		62418	1 Urbis LED	Teceo 48 LED 500mA	79 Watts	10.00 Metres	Galvanised Steel	
Y	1	STREET LIGHTING	PERSHORE AVE FOOTPATH	GRIMSBY	524118.81	407667.74	2011		55314	Urbis		16 Watts	6.00 Metres	Steel	
Y	2	STREET LIGHTING	PERSHORE AVE FOOTPATH	GRIMSBY	524125.99	407649.49	2011		55315	Urbis		16 Watts	6.00 Metres	Steel	
Y	1	STREET LIGHTING	PETCHELL WAY SERVICE ROAD	GRIMSBY	527563.41	409915.39	1968		55355	Urbis	Axia 16 LED 350mA	19 Watts	5.00 Metres	Steel	
Y	2	STREET LIGHTING	PETCHELL WAY SERVICE ROAD	GRIMSBY	527535.95	409918.18	1968		55356	Urbis	Axia 16 LED 350mA	19 Watts	5.00 Metres	Steel	
Y	1	STREET LIGHTING	WESTGATE ROUNDABOUT	GRIMSBY	526100.44	410423.43	2006		55711	1 Urbis LED	Ampera 48 LED 700mA	104 Watts	12.00 Metres	Galvanised Steel	
Y	2	STREET LIGHTING	WESTGATE ROUNDABOUT	GRIMSBY	526119.48	410441.15	2006		55712	1 Urbis LED	Ampera 48 LED 700mA	104 Watts	12.00 Metres	Galvanised Steel	
Y	3	STREET LIGHTING	WESTGATE ROUNDABOUT	GRIMSBY	526142.17	410436.59	2006		55713	1 Urbis LED	Ampera 48 LED 700mA	104 Watts	12.00 Metres	Galvanised Steel	
Y	4	STREET LIGHTING	WESTGATE ROUNDABOUT	GRIMSBY	526166.5	410426.42	2006		55714	1 Urbis LED	Ampera 48 LED 700mA	104 Watts	12.00 Metres	Galvanised Steel	
Y	5	STREET LIGHTING	WESTGATE ROUNDABOUT	GRIMSBY	526177.29	410399.58	2006		55715	1 Urbis LED	Ampera 48 LED 700mA	104 Watts	12.00 Metres	Galvanised Steel	
Y	6	STREET LIGHTING	WESTGATE ROUNDABOUT	GRIMSBY	526166.67	410375.12	2006		55716	1 Urbis LED	Ampera 48 LED 700mA	104 Watts	12.00 Metres	Galvanised Steel	
Y	7	STREET LIGHTING	WESTGATE ROUNDABOUT	GRIMSBY	526149.66	410354.87	2006		55717	1 Urbis LED	Ampera 48 LED 700mA	104 Watts	12.00 Metres	Galvanised Steel	
Y	8	STREET LIGHTING	WESTGATE ROUNDABOUT	GRIMSBY	526122.93	410356.8	2006		55718	1 Urbis LED	Ampera 48 LED 700mA	104 Watts	12.00 Metres	Galvanised Steel	
Y	9	STREET LIGHTING	WESTGATE ROUNDABOUT	GRIMSBY	526101.05	410364.09	2006		55719	1 Urbis LED	Ampera 48 LED 700mA	104 Watts	12.00 Metres	Galvanised Steel	
Y	10	STREET LIGHTING	WESTGATE ROUNDABOUT	GRIMSBY	526092.95	410384.04	2006		55720	1 Urbis LED	Ampera 48 LED 700mA	104 Watts	12.00 Metres	Galvanised Steel	
Y	11	STREET LIGHTING	WESTGATE ROUNDABOUT	GRIMSBY	526086.47	410403.78	2006		55721	1 Urbis LED	Ampera 48 LED 700mA	104 Watts	12.00 Metres	Galvanised Steel	
Y	1	STREET LIGHTING	PYTCHLEY WALK FOOTPATH	CLEETHORPES	530062.41	406950.12	2010		55726	Philips	Other	17 Watts	6.00 Metres	Steel	
Y	2	STREET LIGHTING	PYTCHLEY WALK FOOTPATH	CLEETHORPES	530034.85	406927.16	2010		55727	Thorn	Other	17 Watts	6.00 Metres	Steel	
Y	3	STREET LIGHTING	PYTCHLEY WALK FOOTPATH	CLEETHORPES	530021.99	406938.82	2010		55728	Philips	Other	17 Watts	6.00 Metres	Steel	
Y	4	STREET LIGHTING	PYTCHLEY WALK FOOTPATH	CLEETHORPES	530015.19	406913.05	2010		55729	Philips	Other	17 Watts	6.00 Metres	Steel	
Y	5	STREET LIGHTING	PYTCHLEY WALK FOOTPATH	CLEETHORPES	529991.58	406898.6	2010		55730	Philips	Other	17 Watts	6.00 Metres	Steel	
Y	6	STREET LIGHTING	PYTCHLEY WALK FOOTPATH	CLEETHORPES	529976.06	406883.4	2010		55731	Philips	Other	17 Watts	6.00 Metres	Steel	
Y	7	STREET LIGHTING	PYTCHLEY WALK FOOTPATH	CLEETHORPES	529957.76	406866.51	2010		55732	Philips	Other	17 Watts	6.00 Metres	Steel	

Y	8	STREET LIGHTING	PYTCHLEY WALK FOOTPATH	CLEETHORPES	529937.81	406851.12	2010		55733	Philips	Other	17 Watts	6.00 Metres	Steel	
Y	9	STREET LIGHTING	PYTCHLEY WALK FOOTPATH	CLEETHORPES	529918.58	406860.66	2010		55734	Philips	Other	17 Watts	6.00 Metres	Steel	
Y	1	STREET LIGHTING	RIVER HEAD WALK	GRIMSBY	527007.58	409411.03	2014		66470	Selux	Other	43 Watts	12.00 Metres	WOOD	
Y	2	STREET LIGHTING	RIVER HEAD WALK	GRIMSBY	527026.81	409415.22	2014		66471	Selux	Other	43 Watts	12.00 Metres	WOOD	
Y	3	STREET LIGHTING	RIVER HEAD WALK	GRIMSBY	527042.73	409418.73	2014		66472	Selux	Other	43 Watts	12.00 Metres	WOOD	
Y	4	STREET LIGHTING	RIVER HEAD WALK	GRIMSBY	527059.88	409422.25	2014		66473	Selux	Other	43 Watts	12.00 Metres	WOOD	
Y	1	STREET LIGHTING	ROMSEY COURT FOOTPATH	GRIMSBY	523586.64	408034.09	1990		56231	Urbis	Axia 8 LED 350mA	10 Watts	5.00 Metres	Galvanised Steel	
Y	1	STREET LIGHTING	RUNSWICK ROAD MRA	GRIMSBY	528451.25	408956.06	1995		56408	1 Urbis LED	Teceo 24 LED 500mA	40 Watts	8.00 Metres	Galvanised Steel	
Y	2	STREET LIGHTING	RUNSWICK ROAD MRA	GRIMSBY	528453.53	408939.8	1989		56409	1 Urbis LED	Teceo 24 LED 500mA	40 Watts	8.00 Metres	Galvanised Steel	
Y	3	STREET LIGHTING	RUNSWICK ROAD MRA	GRIMSBY	528436.57	408946.32	1995		56410	1 Urbis LED	Teceo 24 LED 500mA	40 Watts	8.00 Metres	Galvanised Steel	
Y	1	STREET LIGHTING	SAXON CRESCENT FOOTPATH	CLEETHORPES	530071.91	408709.73	2013		56627	Urbis	Axia 8 LED 350mA	10 Watts	6.00 Metres	Steel	
Y	2	STREET LIGHTING	SAXON CRESCENT FOOTPATH	CLEETHORPES	530085.9	408689.9	2013		56628	Urbis	Axia 8 LED 350mA	10 Watts	6.00 Metres	Steel	
Y	1	STREET LIGHTING	SCARTHO CEMETERY ENTRANCE OFF	GRIMSBY	526662.89	407232.11	1963		56642	1 Urbis LED	Teceo 16 LED 500mA	28 Watts	5.00 Metres	Steel	
Y	2	STREET LIGHTING	SCARTHO CEMETERY ENTRANCE OFF	GRIMSBY	526715.54	407234.54	1963		56643	1 Urbis LED	Teceo 16 LED 500mA	28 Watts	5.00 Metres	Steel	
Y	1	STREET LIGHTING	SEACROFT ROAD FOOTPATH	CLEETHORPES	531307.56	407919.33	2009		56801	Urbis	Axia 8 LED 350mA	10 Watts	6.00 Metres	Steel	
Y	2	STREET LIGHTING	SEACROFT ROAD FOOTPATH	CLEETHORPES	531297.19	407938.7	2009		56802	Urbis	Axia 8 LED 350mA	10 Watts	6.00 Metres	Steel	
Y	1	STREET LIGHTING	SECOND AVENUE ROUNDABOUT	GRIMSBY	526025.25	407581.1	1992		56869	1 Urbis LED	Teceo 48 LED 500mA	79 Watts	10.00 Metres	Galvanised Steel	
Y	2	STREET LIGHTING	SECOND AVENUE ROUNDABOUT	GRIMSBY	525997.15	407576.04	1992		56870	1 Urbis LED	Teceo 48 LED 500mA	79 Watts	10.00 Metres	Galvanised Steel	
Y	3	STREET LIGHTING	SECOND AVENUE ROUNDABOUT	GRIMSBY	525992.97	407604.45	1992		56871	1 Urbis LED	Teceo 48 LED 500mA	79 Watts	10.00 Metres	Galvanised Steel	
Y	4	STREET LIGHTING	SECOND AVENUE ROUNDABOUT	GRIMSBY	526022.09	407606.61	1992		56872	1 Urbis LED	Teceo 48 LED 500mA	79 Watts	10.00 Metres	Galvanised Steel	
Y	1	STREET LIGHTING	SECOND AVENUE TENFOOT	GRIMSBY	525981.35	407558.41	2022	21/03/2022	68790	Urbis	Axia 16 LED 350mA	19 Watts	6.00 Metres	Galvanised Steel	
Y	2	STREET LIGHTING	SECOND AVENUE TENFOOT	GRIMSBY	525985.52	407538.49	1993		56874	Urbis	Axia 16 LED 350mA	19 Watts	6.00 Metres	Galvanised Steel	
Y	3	STREET LIGHTING	SECOND AVENUE TENFOOT	GRIMSBY	525989.57	407519.19	1993		56875	Urbis	Axia 16 LED 350mA	19 Watts	6.00 Metres	Galvanised Steel	
Y	1	STREET LIGHTING	SHERATON DRIVE FOOTPATH	HUMBERSTON	531047.43	405919.54	2012		57142	1 Urbis LED	Axia 16 LED 500mA	28 Watts	6.00 Metres	Steel	
Y	2	STREET LIGHTING	SHERATON DRIVE FOOTPATH	HUMBERSTON	531083.29	405929.77	2012		57143	1 Urbis LED	Axia 16 LED 500mA	28 Watts	6.00 Metres	Steel	
Y	1	STREET LIGHTING	SPRINGFIELD ROAD FOOTPATH	GRIMSBY	525753.23	405669.45	1988		57535	Urbis	Axia 8 LED 350mA	10 Watts	5.00 Metres	Galvanised Steel	
Y	2	STREET LIGHTING	SPRINGFIELD ROAD FOOTPATH	GRIMSBY	525754.37	405698.18	1988		57536	Urbis	Axia 8 LED 350mA	10 Watts	5.00 Metres	Galvanised Steel	
Y	3	STREET LIGHTING	SPRINGFIELD ROAD FOOTPATH	GRIMSBY	525752.09	405725.15	1988		57537	Urbis	Axia 8 LED 350mA	10 Watts	5.00 Metres	Galvanised Steel	
Y	1	STREET LIGHTING	SPRINGFIELD ROAD O A P	GRIMSBY	526214.77	405973.52	2013		57538	Urbis	Axia 8 LED 350mA	10 Watts	6.00 Metres	Steel	
Y	16	STREET LIGHTING	ST IVES CRESCENT FOOTPATH	GRIMSBY	524406.49	408223.82	1994		57743	Urbis	Axia 16 LED 350mA	19 Watts	5.00 Metres	Galvanised Steel	
Y	17	STREET LIGHTING	ST IVES CRESCENT FOOTPATH	GRIMSBY	524412.19	408252.37	1994		57744	Urbis	Axia 16 LED 350mA	19 Watts	5.00 Metres	Galvanised Steel	
Y	18	STREET LIGHTING	ST IVES CRESCENT FOOTPATH	GRIMSBY	524331.18	408189.32	1994		57745	Urbis	Axia 16 LED 350mA	19 Watts	5.00 Metres	Galvanised Steel	
Y	19	STREET LIGHTING	ST IVES CRESCENT FOOTPATH	GRIMSBY	524288.27	408165.53	1994		57746	Urbis	Axia 16 LED 350mA	19 Watts	5.00 Metres	Galvanised Steel	
Y	20	STREET LIGHTING	ST IVES CRESCENT FOOTPATH	GRIMSBY	524250.3	408141.61	1994		57747	Urbis	Axia 16 LED 350mA	19 Watts	5.00 Metres	Galvanised Steel	
Y	1	STREET LIGHTING	ST JAMES SQUARE	GRIMSBY					69920						
Y	2	STREET LIGHTING	ST JAMES SQUARE	GRIMSBY					69921						
Y	3	STREET LIGHTING	ST JAMES SQUARE	GRIMSBY					69922						
Y	4	STREET LIGHTING	ST JAMES SQUARE	GRIMSBY					69923						
Y	5	STREET LIGHTING	ST JAMES SQUARE	GRIMSBY					69924						
Y	6	STREET LIGHTING	ST JAMES SQUARE	GRIMSBY					69925						
Y	7	STREET LIGHTING	ST JAMES SQUARE	GRIMSBY					69926						
Y	8	STREET LIGHTING	ST JAMES SQUARE	GRIMSBY					69927						
Y	9	STREET LIGHTING	ST JAMES SQUARE	GRIMSBY					69928						
Y	10	STREET LIGHTING	ST JAMES SQUARE	GRIMSBY					69929						
Y	11	STREET LIGHTING	ST JAMES SQUARE	GRIMSBY					69930						
Y	12	STREET LIGHTING	ST JAMES SQUARE	GRIMSBY					69931						
Y	13	STREET LIGHTING	ST JAMES SQUARE	GRIMSBY					69932						
Y	14	STREET LIGHTING	ST JAMES SQUARE	GRIMSBY					69933						
Y	15	STREET LIGHTING	ST JAMES SQUARE	GRIMSBY					69934						
Y	16	STREET LIGHTING	ST JAMES SQUARE	GRIMSBY					69935						
Y	1	STREET LIGHTING	ST MICHAELS ROAD ROUNDABOUT	GRIMSBY	524155.27	407884.93	1954		57853	1 Urbis LED	Teceo 40 LED 500mA	64 Watts	8.00 Metres	Steel	
Y	2	STREET LIGHTING	ST MICHAELS ROAD ROUNDABOUT	GRIMSBY	524133.76	407886.64	2004		57854	1 Urbis LED	Teceo 40 LED 500mA	64 Watts	8.00 Metres	Stainless Steel	
Y	3	STREET LIGHTING	ST MICHAELS ROAD ROUNDABOUT	GRIMSBY	524132.87	407909.49	2000		57855	1 Urbis LED	Teceo 40 LED 500mA	64 Watts	8.00 Metres	Galvanised Steel	
Y	4	STREET LIGHTING	ST MICHAELS ROAD ROUNDABOUT	GRIMSBY	524154.01	407911.51	2000		57856	1 Urbis LED	Teceo 40 LED 500mA	64 Watts	8.00 Metres	Galvanised Steel	
Y	1	STREET LIGHTING	ST NICHOLAS DRIVE FOOTPATH	GRIMSBY	523543.19	408721.94	2003		57919	Urbis	Axia 8 LED 350mA	10 Watts	6.00 Metres	Galvanised Steel	
Y	2	STREET LIGHTING	ST NICHOLAS DRIVE FOOTPATH	GRIMSBY	523509.06	408754.76	2003		57920	Urbis	Axia 8 LED 350mA	10 Watts	6.00 Metres	Galvanised Steel	
Y	3	STREET LIGHTING	ST NICHOLAS DRIVE FOOTPATH	GRIMSBY	523476.41	408791.45	2003		57921	Urbis	Axia 8 LED 350mA	10 Watts	6.00 Metres	Galvanised Steel	
Y	4	STREET LIGHTING	ST NICHOLAS DRIVE FOOTPATH	GRIMSBY	523450.73	408821.13	1999		57922	Urbis	Axia 8 LED 350mA	10 Watts	6.00 Metres	Galvanised Steel	
Y	5	STREET LIGHTING	ST NICHOLAS DRIVE FOOTPATH	GRIMSBY			2024	26/09/2024	69987	Urbis	Axia 24 LED 500mA	28 Watts	6.00 Metres	Steel	
Y	6	STREET LIGHTING	ST NICHOLAS DRIVE FOOTPATH	GRIMSBY			2024	26/09/2024	70254	Urbis	Axia 24 LED 500mA	28 Watts	6.00 Metres	Steel	
Y	7	STREET LIGHTING	ST NICHOLAS DRIVE FOOTPATH	GRIMSBY	523484.02	408960.81	2004		57925	Urbis	Axia 8 LED 350mA	10 Watts	6.00 Metres	Galvanised Steel	
Y	8	STREET LIGHTING	ST NICHOLAS DRIVE FOOTPATH	GRIMSBY	523469.31	409012.08	1999		57926	Urbis	Axia 8 LED 350mA	10 Watts	6.00 Metres	Galvanised Steel	
Y	9	STREET LIGHTING	ST NICHOLAS DRIVE FOOTPATH	GRIMSBY			2024	26/09/2024	70255	Urbis	Axia 24 LED 500mA	28 Watts	6.00 Metres	Steel	
Y	10	STREET LIGHTING	ST NICHOLAS DRIVE FOOTPATH	GRIMSBY	523390.51	409110.58	1999		57928	Urbis	Axia 8 LED 350mA	10 Watts	6.00 Metres	Galvanised Steel	
Y	11	STREET LIGHTING	ST NICHOLAS DRIVE FOOTPATH	GRIMSBY	523345.83	409157.94	2020	15/01/2020	67784	Urbis	Axia 8 LED 350mA	10 Watts	6.00 Metres	Galvanised Steel	
Y	12	STREET LIGHTING	ST NICHOLAS DRIVE FOOTPATH	GRIMSBY	523317.06	409192.18	1980		57930	Urbis	Axia 8 LED 350mA	10 Watts	8.00 Metres	Steel	
Y	13	STREET LIGHTING	ST NICHOLAS DRIVE FOOTPATH	GRIMSBY	523287.6	409222.66	1980		57931	Urbis	Axia 8 LED 350mA	10 Watts	8.00 Metres	Steel	
Y	14	STREET LIGHTING	ST NICHOLAS DRIVE FOOTPATH	GRIMSBY	523257.03	409255.34	1980		57932	Urbis	Axia 8 LED 350mA	10 Watts	8.00 Metres	Steel	
Y	15	STREET LIGHTING	ST NICHOLAS DRIVE FOOTPATH	GRIMSBY	523239.54	409303.67	1980		57933	Urbis	Axia 8 LED 350mA	10 Watts	5.00 Metres	Galvanised Steel	
Y	16	STREET LIGHTING	ST NICHOLAS DRIVE FOOTPATH	GRIMSBY	523237.33	409342.89	1980		57934	Urbis	Axia 8 LED 350mA	10 Watts	5.00 Metres	Galvanised Steel	
Y	17	STREET LIGHTING	ST NICHOLAS DRIVE FOOTPATH	GRIMSBY	523235.31	409380.82	1980		57935	Urbis	Axia 8 LED 350mA	10 Watts	5.00 Metres	Galvanised Steel	
Y	18	STREET LIGHTING	ST NICHOLAS DRIVE FOOTPATH	GRIMSBY	523232.91	409412.39	1980		57936	Urbis	Axia 8 LED 350mA	10 Watts	5.00 Metres	Galvanised Steel	
Y	19	STREET LIGHTING	ST NICHOLAS DRIVE FOOTPATH	GRIMSBY	523231.44	409441.49	1980		57937	Urbis	Axia 8 LED 350mA	10 Watts	5.00 Metres	Galvanised Steel	
Y	20	STREET LIGHTING	ST NICHOLAS DRIVE FOOTPATH	GRIMSBY	523209.53	409465.79	1980		57938	Urbis	Axia 8 LED 350mA	10 Watts	5.00 Metres	Galvanised Steel	
Y	21	STREET LIGHTING	ST NICHOLAS DRIVE FOOTPATH	GRIMSBY	523228.86	409481.62	1980		57939	Urbis	Axia 8 LED 350mA	10 Watts	5.00 Metres	Galvanised Steel	
Y	22	STREET LIGHTING	ST NICHOLAS DRIVE FOOTPATH	GRIMSBY	523242.3	409512	1980		57940	Urbis	Axia 8 LED 350mA	10 Watts	5.00 Metres	Galvanised Steel	
Y	23	STREET LIGHTING	ST NICHOLAS DRIVE FOOTPATH	GRIMSBY	523258.14	409536.95	1980		57941	Urbis	Axia 8 LED 350mA	10 Watts	5.00 Metres	Galvanised Steel	
Y	24	STREET LIGHTING	ST NICHOLAS DRIVE FOOTPATH	GRIMSBY	523275.44	409565.03	1980		57942	Urbis	Axia 8 LED 350mA	10 Watts	5.00 Metres	Galvanised Steel	
Y	1	STREET LIGHTING	ST PETERS AVENUE CAR PARK	CLEETHORPES	530547.22	408722.8	1996		57967	1 Urbis LED	Teceo 48 LED 500mA	79 Watts	8.00 Metres	Galvanised Steel	
Y	2	STREET LIGHTING	ST PETERS AVENUE CAR PARK	CLEETHORPES	530559	408736.91	2014		57973	1 Urbis LED	Teceo 48 LED 500mA	79 Watts	8.00 Metres	Galvanised Steel	
Y	3	STREET LIGHTING	ST PETERS AVENUE CAR PARK	CLEETHORPES	530532.8	408775.9	1988		57968	1 Urbis LED	Teceo 48 LED 500mA	79 Watts	5.00 Metres	Galvanised Steel	
Y	4	STREET LIGHTING	ST PETERS AVENUE CAR PARK	CLEETHORPES	530558.44	408770.62	1988		57969	1 Urbis LED	Teceo 48 LED 500mA	79 Watts	8.00 Metres	Galvanised Steel	
Y	5	STREET LIGHTING	ST PETERS AVENUE CAR PARK	CLEETHORPES	530571.61	408741.45	1988		57970	1 Urbis LED	Teceo 48 LED 500mA	79 Watts	6.00 Metres	Galvanised Steel	
Y	6	STREET LIGHTING	ST PETERS AVENUE CAR PARK	CLEETHORPES	530575.58	408708.49	1988		57972	1 Urbis LED	Teceo 48 LED 500mA	79 Watts	8.00 Metres	Galvanised Steel	
Y	7	STREET LIGHTING	ST PETERS AVENUE CAR PARK	CLEETHORPES	530550.39	408705.83	1988		57971	1 Urbis LED	Teceo 48 LED 500mA	79 Watts	6.00 Metres	Galvanised Steel	
Y	1	STREET LIGHTING	STATION ROAD FOOTPATH	GRIMSBY	523814.57	410351.67	2006		58423	Urbis	Axia 8 LED 350mA	10 Watts	6.00 Metres	Galvanised Steel	
Y	2	STREET LIGHTING	STATION ROAD FOOTPATH	GRIMSBY	523844.05	410363.28	2006		58424	Urbis	Axia 8 LED 350mA	10 Watts	6.00 Metres	Galvanised Steel	
Y	3	STREET LIGHTING	STATION ROAD FOOTPATH	GRIMSBY	523854.87	410376.05	2006		58425	Urbis	Axia 8 LED 350mA	10 Watts	6.00 Metres	Galvanised Steel	
Y	4	STREET LIGHTING	STATION ROAD FOOTPATH	GRIMSBY	523859.6	410400.9	2006		58426	Urbis	Axia 8 LED 350mA	10 Watts	6.00 Metres	Galvanised Steel	
Y	1	STREET LIGHTING	FOOTPATH FROM STATION ROAD TO	GRIMSBY	523790.08	410280.29	1984		48818	Urbis	Axia 16 LED 350mA	19 Watts	6.00 Metres	Galvanised Steel	
Y	2	STREET LIGHTING	FOOTPATH FROM STATION ROAD TO	GRIMSBY	523817.88	410258.47	1984		48819	Urbis	Axia 16 LED 350mA	19 Watts	6.00 Metres	Galvanised Steel	
Y	3	STREET LIGHTING	FOOTPATH FROM STATION ROAD TO	GRIMSBY	523838.69	410235.92	1984		48820	Urbis	Axia 16 LED 350mA	19 Watts	6.00 Metres	Galvanised Steel	
Y	4	STREET LIGHTING	FOOTPATH FROM STATION ROAD TO	GRIMSBY	523860.43	410209.62	2019	10/09/2019	67623	Urbis	Axia 16 LED 350mA	19 Watts	6.00 Metres	Steel	
Y	5	STREET LIGHTING	FOOTPATH FROM STATION ROAD TO	GRIMSBY	523879.56	410187.86	1984		48822	Urbis	Axia 16 LED 350mA	19 Watts	6.00 Metres	Galvanised Steel	
Y	6	STREET LIGHTING	FOOTPATH FROM STATION ROAD TO	GRIMSBY	523896.68	410162.92	1984		48823	Urbis	Axia 16 LED 350mA	19 Watts	6.00 Metres	Galvanised Steel	
Y	7	STREET LIGHTING	FOOTPATH FROM STATION ROAD TO	GRIMSBY	523914.73	410138.43	1984		48824	Urbis	Axia 16 LED 350mA	19 Watts	6.00 Metres	Galvanised Steel	
Y	1	STREET LIGHTING	SERVICE ROAD 1 OFF THESIGER	GRIMSBY	527781.55	410243.17	1978		59073	1 Urbis LED	Axia 16 LED 500mA	28 Watts	5.00 Metres	Galvanised Steel	
Y	2	STREET LIGHTING	SERVICE ROAD 1 OFF THESIGER	GRIMSBY	527808.61	410227.41	2003		59074	1 Urbis LED	Axia 16 LED 500mA	28 Watts	5.00 Metres	Galvanised Steel	
Y	1	STREET LIGHTING	TIMBERLEY DRIVE FOOTPATH	GRIMSBY	523452.66	409312.5	2015	02/11/2015	59224	Urbis	Axia 8 LED 350mA	10 Watts	6.00 Metres	Steel	
Y	1	STREET LIGHTING	TOOTHILL ROUNDABOUT	GRIMSBY	524639.63	408858.34	2006		61931	1 Urbis LED	Ampera 48 LED 700mA	104 Watts	12.00 Metres	Stainless Steel	
Y	1	STREET LIGHTING	TOOTHILL ROUNDABOUT	GRIMSBY	524639.63	408858.34	2006		62465	1 Urbis LED	Ampera 48 LED 700mA	104 Watts	12.00 Metres	Stainless Steel	
Y	2	STREET LIGHTING	TOOTHILL ROUNDABOUT	GRIMSBY	524623.05	408858.47	1995		59309	1 Urbis LED	Teceo 48 LED 500mA	79 Watts	12.00 Metres	Galvanised Steel	
Y	3	STREET LIGHTING	TOOTHILL ROUNDABOUT	GRIMSBY	524613.93	408872.77	1995		61932	1 Urbis LED	Ampera 48 LED 700mA	104 Watts	12.00 Metres	Galvanised Steel	
Y	3	STREET LIGHTING	TOOTHILL ROUNDABOUT	GRIMSBY	524613.93	408872.77	1995		62466	1 Urbis LED	Ampera 48 LED 700mA	104 Watts	12.00 Metres	Galvanised Steel	
Y	4	STREET LIGHTING	TOOTHILL ROUNDABOUT	GRIMSBY	524621.78	408891.7	1995		59310	1 Urbis LED	Teceo 48 LED 500mA	79 Watts	12.00 Metres	Galvanised Steel	
Y	5	STREET LIGHTING	TOOTHILL ROUNDABOUT	GRIMSBY	524640.01	408888.15	1995		61933	1 Urbis LED	Ampera 48 LED 700mA	104 Watts	12.00 Metres	Galvanised Steel	
Y	5	STREET LIGHTING	TOOTHILL ROUNDABOUT	GRIMSBY	524640.01	408888.15	1995		62467	1 Urbis LED	Ampera 48 LED 700mA	104 Watts	12.00 Metres	Galvanised Steel	
Y	6	STREET LIGHTING	TOOTHILL ROUNDABOUT	GRIMSBY	524650.77	408875.81	1995		59311	1 Urbis LED	Teceo 48 LED 500mA	79 Watts	12.00 Metres	Galvanised Steel	
Y	1	STREET LIGHTING	TOWN HOLT FOOTPATH	GRIMSBY	523610.17	408339.42	2001		59377	1 Urbis LED	Teceo 24 LED 500mA	40 Watts	8.00 Metres	Steel	
Y	2	STREET LIGHTING	TOWN HOLT FOOTPATH	GRIMSBY	523602.51	408405.24	2001		59378	1 Urbis LED	Teceo 24 LED 500mA	40 Watts	8.00 Metres	Steel	

Y	3	STREET LIGHTING	TOWN HOLT FOOTPATH	GRIMSBY	523593	408470	2001		59379	1 Urbis LED	Teceo 24 LED 500mA	40 Watts	8.00 Metres	Steel	
Y	4	STREET LIGHTING	TOWN HOLT FOOTPATH	GRIMSBY	523585.98	408536.07	2001		59380	1 Urbis LED	Teceo 24 LED 500mA	40 Watts	8.00 Metres	Steel	
Y	5	STREET LIGHTING	TOWN HOLT FOOTPATH	GRIMSBY	523577.12	408603.83	2001		59381	Urbis	Axia 24 LED 540mA	41 Watts	8.00 Metres	Steel	
Y	6	STREET LIGHTING	TOWN HOLT FOOTPATH	GRIMSBY	523603.21	408659.85	2001		59382	1 Urbis LED	Teceo 24 LED 500mA	40 Watts	8.00 Metres	Steel	
Y	7	STREET LIGHTING	TOWN HOLT FOOTPATH	GRIMSBY	523627.2	408703.72	2001		59383	1 Urbis LED	Teceo 24 LED 500mA	40 Watts	8.00 Metres	Steel	
Y	8	STREET LIGHTING	TOWN HOLT FOOTPATH	GRIMSBY	523616.55	408747.13	2004		59384	1 Urbis LED	Teceo 24 LED 500mA	40 Watts	6.00 Metres	Galvanised Steel	
Y	1	STREET LIGHTING	VICTOR STREET REAR ACCESS	GRIMSBY	528092.57	409922.91	2022	13/05/2022	68902	Urbis	Axia 24 LED 500mA	28 Watts	6.00 Metres	Galvanised Steel	
Y	2	STREET LIGHTING	VICTOR STREET REAR ACCESS	GRIMSBY	528106	409946.97	1963		59570	1 Urbis LED	Axia 16 LED 500mA	28 Watts	5.00 Metres	Steel	
Y	3	STREET LIGHTING	VICTOR STREET REAR ACCESS	GRIMSBY	528116.64	409977.03	1963		59571	1 Urbis LED	Axia 16 LED 500mA	28 Watts	5.00 Metres	Steel	
Y	4	STREET LIGHTING	VICTOR STREET REAR ACCESS	GRIMSBY	528126.66	410004.99	1963		59572	1 Urbis LED	Axia 16 LED 500mA	28 Watts	5.00 Metres	Steel	
Y	5	STREET LIGHTING	VICTOR STREET REAR ACCESS	GRIMSBY	528140.3	410029.08	2003		59573	1 Urbis LED	Axia 16 LED 500mA	28 Watts	6.00 Metres	Galvanised Steel	
Y	1	STREET LIGHTING	WARDALL STREET CAR PARK	CLEETHORPES	530905.3	408539.85	2008		59809	1 Urbis LED	Axia 16 LED 500mA	28 Watts	5.00 Metres	Steel	
Y	2	STREET LIGHTING	WARDALL STREET CAR PARK	CLEETHORPES	530885.07	408514.84	2008		59810	1 Urbis LED	Axia 16 LED 500mA	28 Watts	5.00 Metres	Steel	
Y	3	STREET LIGHTING	WARDALL STREET CAR PARK	CLEETHORPES	530912.71	408506.57	2008		61952	1 Urbis LED	Teceo 48 LED 500mA	79 Watts	8.00 Metres	Steel	
Y	3	STREET LIGHTING	WARDALL STREET CAR PARK	CLEETHORPES	530912.71	408506.57	2008		62501	1 Urbis LED	Teceo 48 LED 500mA	79 Watts	8.00 Metres	Steel	
Y	1	STREET LIGHTING	WATERWORKS LANE	GRIMSBY	525387.62	408745.33	2001		59876	1 Urbis LED	Axia 16 LED 500mA	28 Watts	6.00 Metres	Galvanised Steel	
Y	2	STREET LIGHTING	WATERWORKS LANE	GRIMSBY	525356.15	408714.32	2001		59877	1 Urbis LED	Axia 16 LED 500mA	28 Watts	6.00 Metres	Galvanised Steel	
Y	3	STREET LIGHTING	WATERWORKS LANE	GRIMSBY	525329.56	408680.02	2001		59878	1 Urbis LED	Axia 16 LED 500mA	28 Watts	6.00 Metres	Galvanised Steel	
Y	1	STREET LIGHTING	WATKIN STREET NORTH FOOTPATH	GRIMSBY	526573.8	410153.48	1968		59905	Urbis	Axia 16 LED 350mA	19 Watts	5.00 Metres	Steel	
Y	1	STREET LIGHTING	WATKIN STREET SOUTH FOOTPATH	GRIMSBY	526570.56	410000.39	1968		59910	Urbis	Axia 16 LED 350mA	19 Watts	5.00 Metres	Steel	
Y	1	STREET LIGHTING	WEEKES ROAD FOOTPATH	CLEETHORPES	530904.01	407595.29	2014		59934	Urbis	Axia 8 LED 350mA	10 Watts	6.00 Metres	Galvanised Steel	
Y	1	STREET LIGHTING	WELLOWGATE FOOTBRIDGE	GRIMSBY	526721.7	409117.36	1965		60249			125 Watts	4.00 Metres	Steel	
Y	2	STREET LIGHTING	WELLOWGATE FOOTBRIDGE	GRIMSBY	526714.73	409114.83	1965		60250			125 Watts	4.00 Metres	Steel	
Y	3	STREET LIGHTING	WELLOWGATE FOOTBRIDGE	GRIMSBY	526724.35	409097.49	1965		60251			125 Watts	4.00 Metres	Steel	
Y	4	STREET LIGHTING	WELLOWGATE FOOTBRIDGE	GRIMSBY	526732.2	409097.24	1965		60252			125 Watts	4.00 Metres	Steel	
Y	1	STREET LIGHTING	WESLEY CRESCENT FOOTPATH	CLEETHORPES	530428.9	407554.35	1996		60295	1 Urbis LED	Teceo 16 LED 500mA	28 Watts	6.00 Metres	Galvanised Steel	
Y	1	STREET LIGHTING	WESTGATE EAST	GRIMSBY	526194.24	410368.48	2006		60445	1 Urbis LED	Ampera 48 LED 700mA	104 Watts	12.00 Metres	Steel	
Y	2	STREET LIGHTING	WESTGATE EAST	GRIMSBY	526172.73	410356.83	2006		60446	1 Urbis LED	Ampera 48 LED 700mA	104 Watts	12.00 Metres	Steel	
Y	3	STREET LIGHTING	WESTGATE EAST	GRIMSBY	526234.11	410349.44	2010		60447	Urbis	mpera Maxi 128 LED 700m	277 Watts	12.00 Metres	Steel	
Y	4	STREET LIGHTING	WESTGATE EAST	GRIMSBY	526225.17	410328.3	2006		60448	1 Urbis LED	Ampera 48 LED 700mA	104 Watts	12.00 Metres	Steel	
Y	5	STREET LIGHTING	WESTGATE EAST	GRIMSBY	526272.72	410331.54	2006		60449	1 Urbis LED	Ampera 48 LED 700mA	104 Watts	12.00 Metres	Steel	
Y	6	STREET LIGHTING	WESTGATE EAST	GRIMSBY	526264.79	410310.21	2006		60450	1 Urbis LED	Ampera 48 LED 700mA	104 Watts	12.00 Metres	Steel	
Y	7	STREET LIGHTING	WESTGATE EAST	GRIMSBY	526311.8	410318.68	2006		60451	1 Urbis LED	Ampera 48 LED 700mA	104 Watts	12.00 Metres	Steel	
Y	8	STREET LIGHTING	WESTGATE EAST	GRIMSBY	526305.98	410296.54	2006		60452	1 Urbis LED	Ampera 48 LED 700mA	104 Watts	12.00 Metres	Steel	
Y	9	STREET LIGHTING	WESTGATE EAST	GRIMSBY	526352.52	410308.52	2006		60453	1 Urbis LED	Ampera 48 LED 700mA	104 Watts	12.00 Metres	Steel	
Y	10	STREET LIGHTING	WESTGATE EAST	GRIMSBY	526349.79	410287.82	2006		60454	1 Urbis LED	Ampera 48 LED 700mA	104 Watts	12.00 Metres	Steel	
Y	11	STREET LIGHTING	WESTGATE EAST	GRIMSBY	526393.43	410302.55	2006		60455	1 Urbis LED	Ampera 48 LED 700mA	104 Watts	12.00 Metres	Steel	
Y	12	STREET LIGHTING	WESTGATE EAST	GRIMSBY	526390.82	410282.33	2006		60456	1 Urbis LED	Ampera 48 LED 700mA	104 Watts	12.00 Metres	Steel	
Y	13	STREET LIGHTING	WESTGATE EAST	GRIMSBY	526433.98	410300.28	2006		60457	1 Urbis LED	Ampera 48 LED 700mA	104 Watts	12.00 Metres	Steel	
Y	14	STREET LIGHTING	WESTGATE EAST	GRIMSBY	526431.23	410280	2006		60458	1 Urbis LED	Ampera 48 LED 700mA	104 Watts	12.00 Metres	Steel	
Y	15	STREET LIGHTING	WESTGATE EAST	GRIMSBY	526478.02	410298.85	2006		60459	1 Urbis LED	Ampera 48 LED 700mA	104 Watts	12.00 Metres	Steel	
Y	16	STREET LIGHTING	WESTGATE EAST	GRIMSBY	526476.39	410278.67	2006		60460	1 Urbis LED	Ampera 48 LED 700mA	104 Watts	12.00 Metres	Steel	
Y	17	STREET LIGHTING	WESTGATE EAST	GRIMSBY	526520.94	410299.24	2006		60461	1 Urbis LED	Ampera 48 LED 700mA	104 Watts	12.00 Metres	Steel	
Y	18	STREET LIGHTING	WESTGATE EAST	GRIMSBY	526519.55	410277.33	2006		60462	1 Urbis LED	Ampera 48 LED 700mA	104 Watts	12.00 Metres	Steel	
Y	19	STREET LIGHTING	WESTGATE EAST	GRIMSBY	526564.13	410301.27	2006		60463	1 Urbis LED	Ampera 48 LED 700mA	104 Watts	12.00 Metres	Steel	
Y	20	STREET LIGHTING	WESTGATE EAST	GRIMSBY	526562.13	410275.8	2006		60464	1 Urbis LED	Ampera 48 LED 700mA	104 Watts	12.00 Metres	Steel	
Y	21	STREET LIGHTING	WESTGATE EAST	GRIMSBY	526606.89	410300.09	2006		60465	1 Urbis LED	Ampera 48 LED 700mA	104 Watts	12.00 Metres	Steel	
Y	22	STREET LIGHTING	WESTGATE EAST	GRIMSBY	526604.87	410274.96	2006		60466	1 Urbis LED	Ampera 48 LED 700mA	104 Watts	12.00 Metres	Steel	
Y	23	STREET LIGHTING	WESTGATE EAST	GRIMSBY	526650.02	410295.52	2006		60467	1 Urbis LED	Teceo 48 LED 700mA	104 Watts	12.00 Metres	Steel	
Y	24	STREET LIGHTING	WESTGATE EAST	GRIMSBY	526648.22	410274.79	2006		60468	1 Urbis LED	Ampera 48 LED 700mA	104 Watts	12.00 Metres	Steel	
Y	25	STREET LIGHTING	WESTGATE EAST	GRIMSBY	526692.58	410298.94	2006		60469	1 Urbis LED	Ampera 48 LED 700mA	104 Watts	12.00 Metres	Steel	
Y	26	STREET LIGHTING	WESTGATE EAST	GRIMSBY	526690.94	410274.04	2006		60470	1 Urbis LED	Ampera 48 LED 700mA	104 Watts	12.00 Metres	Steel	
Y	27	STREET LIGHTING	WESTGATE EAST	GRIMSBY	526736.16	410295.62	2006		60471	1 Urbis LED	Ampera 48 LED 700mA	104 Watts	12.00 Metres	Steel	
Y	28	STREET LIGHTING	WESTGATE EAST	GRIMSBY	526734.68	410272.69	2006		60472	1 Urbis LED	Ampera 48 LED 700mA	104 Watts	12.00 Metres	Steel	
Y	29	STREET LIGHTING	WESTGATE EAST	GRIMSBY	526778.64	410292.63	2006		60473	1 Urbis LED	Ampera 48 LED 700mA	104 Watts	12.00 Metres	Steel	
Y	30	STREET LIGHTING	WESTGATE EAST	GRIMSBY	526777.02	410271.44	2006		60474	1 Urbis LED	Ampera 48 LED 700mA	104 Watts	12.00 Metres	Steel	
Y	31	STREET LIGHTING	WESTGATE EAST	GRIMSBY	526821.29	410291.08	2006		60475	1 Urbis LED	Ampera 48 LED 700mA	104 Watts	12.00 Metres	Steel	
Y	32	STREET LIGHTING	WESTGATE EAST	GRIMSBY	526820.62	410270.77	2006		60476	1 Urbis LED	Ampera 48 LED 700mA	104 Watts	12.00 Metres	Steel	
Y	33	STREET LIGHTING	WESTGATE EAST	GRIMSBY	526865.02	410291.22	2006		60477	1 Urbis LED	Ampera 48 LED 700mA	104 Watts	12.00 Metres	Steel	
Y	34	STREET LIGHTING	WESTGATE EAST	GRIMSBY	526864.18	410270.68	2006		60478	1 Urbis LED	Ampera 48 LED 700mA	104 Watts	12.00 Metres	Steel	
Y	35	STREET LIGHTING	WESTGATE EAST	GRIMSBY	526903.46	410294.9	2006		60479	1 Urbis LED	Ampera 48 LED 700mA	104 Watts	12.00 Metres	Steel	
Y	36	STREET LIGHTING	WESTGATE EAST	GRIMSBY	526905.59	410272.62	2006		60480	1 Urbis LED	Ampera 48 LED 700mA	104 Watts	12.00 Metres	Steel	
Y	37	STREET LIGHTING	WESTGATE EAST	GRIMSBY	526945.2	410302.97	2006		60481	1 Urbis LED	Ampera 48 LED 700mA	104 Watts	12.00 Metres	Steel	
Y	38	STREET LIGHTING	WESTGATE EAST	GRIMSBY	526949.4	410280.2	2006		60482	1 Urbis LED	Ampera 48 LED 700mA	104 Watts	12.00 Metres	Steel	
Y	39	STREET LIGHTING	WESTGATE EAST	GRIMSBY	526993.2	410313.6	2006		60483	1 Urbis LED	Ampera 48 LED 700mA	104 Watts	12.00 Metres	Steel	
Y	40	STREET LIGHTING	WESTGATE EAST	GRIMSBY	526998.77	410288.79	2006		60484	1 Urbis LED	Ampera 48 LED 700mA	104 Watts	12.00 Metres	Steel	
Y	41	STREET LIGHTING	WESTGATE EAST	GRIMSBY	527030	410301.83	2006		61954	1 Urbis LED	Ampera 128 LED	270 Watts	18.00 Metres	Steel	
Y	41	STREET LIGHTING	WESTGATE EAST	GRIMSBY	527030	410301.83	2006		62503	1 Urbis LED	Ampera 128 LED	270 Watts	18.00 Metres	Steel	
Y	42	STREET LIGHTING	WESTGATE EAST	GRIMSBY	527114.43	410342.13	2006		61955	1 Urbis LED	Ampera 128 LED	270 Watts	18.00 Metres	Steel	
Y	42	STREET LIGHTING	WESTGATE EAST	GRIMSBY	527114.43	410342.13	2006		62504	1 Urbis LED	Ampera 128 LED	270 Watts	18.00 Metres	Steel	
Y	43	STREET LIGHTING	WESTGATE EAST	GRIMSBY	527145.07	410387.88	2006		60485	1 Urbis LED	Ampera 48 LED 700mA	104 Watts	12.00 Metres	Steel	
Y	44	STREET LIGHTING	WESTGATE EAST	GRIMSBY	527157.43	410368.39	2006		60486	1 Urbis LED	Ampera 48 LED 700mA	104 Watts	12.00 Metres	Steel	
Y	45	STREET LIGHTING	WESTGATE EAST	GRIMSBY	527165.05	410400.4	2006		60487	1 Urbis LED	Ampera 48 LED 700mA	104 Watts	12.00 Metres	Steel	
Y	46	STREET LIGHTING	WESTGATE EAST	GRIMSBY	527177.79	410375.89	2006		60488	1 Urbis LED	Ampera 48 LED 700mA	104 Watts	12.00 Metres	Steel	
Y	1	STREET LIGHTING	WESTGATE WEST	GRIMSBY	525370	410694.9	2006		60489	1 Urbis LED	Ampera 48 LED 700mA	104 Watts	12.00 Metres	Steel	
Y	2	STREET LIGHTING	WESTGATE WEST	GRIMSBY	525340.12	410679.46	2006		60490	1 Urbis LED	Ampera 48 LED 700mA	104 Watts	12.00 Metres	Steel	
Y	3	STREET LIGHTING	WESTGATE WEST	GRIMSBY	525384.44	410688.64	2006		60491	1 Urbis LED	Ampera 48 LED 700mA	104 Watts	12.00 Metres	Steel	
Y	4	STREET LIGHTING	WESTGATE WEST	GRIMSBY	525377.28	410666.42	2006		60492	1 Urbis LED	Ampera 48 LED 700mA	104 Watts	12.00 Metres	Steel	
Y	5	STREET LIGHTING	WESTGATE WEST	GRIMSBY	525424.04	410673.74	2006		60493	1 Urbis LED	Ampera 48 LED 700mA	104 Watts	12.00 Metres	Steel	
Y	6	STREET LIGHTING	WESTGATE WEST	GRIMSBY	525415.91	410652.62	2006		60494	1 Urbis LED	Teceo 48 LED 700mA	104 Watts	12.00 Metres	Steel	
Y	7	STREET LIGHTING	WESTGATE WEST	GRIMSBY	525448.69	410637.49	2006		61956	1 Urbis LED	Ampera 128 LED	270 Watts	18.00 Metres	Steel	
Y	7	STREET LIGHTING	WESTGATE WEST	GRIMSBY	525448.69	410637.49	2006		62505	1 Urbis LED	Ampera 128 LED	270 Watts	18.00 Metres	Steel	
Y	8	STREET LIGHTING	WESTGATE WEST	GRIMSBY	525530.02	410611.53	2006		61957	1 Urbis LED	Ampera 128 LED	270 Watts	18.00 Metres	Steel	
Y	8	STREET LIGHTING	WESTGATE WEST	GRIMSBY	525530.02	410611.53	2006		62506	1 Urbis LED	Ampera 128 LED	270 Watts	18.00 Metres	Steel	
Y	9	STREET LIGHTING	WESTGATE WEST	GRIMSBY	525611.21	410585.47	2006		61958	1 Urbis LED	Ampera 128 LED	270 Watts	18.00 Metres	Steel	
Y	9	STREET LIGHTING	WESTGATE WEST	GRIMSBY	525611.21	410585.47	2006		62507	1 Urbis LED	Ampera 128 LED	270 Watts	18.00 Metres	Steel	
Y	10	STREET LIGHTING	WESTGATE WEST	GRIMSBY	525659.07	410597.6	2006		60495	1 Urbis LED	Ampera 48 LED 700mA	104 Watts	12.00 Metres	Steel	
Y	11	STREET LIGHTING	WESTGATE WEST	GRIMSBY	525652.71	410576.23	2006		60496	1 Urbis LED	Ampera 48 LED 700mA	104 Watts	12.00 Metres	Steel	
Y	12	STREET LIGHTING	WESTGATE WEST	GRIMSBY	525698.22	410589.02	2006		60497	1 Urbis LED	Ampera 48 LED 700mA	104 Watts	12.00 Metres	Steel	
Y	13	STREET LIGHTING	WESTGATE WEST	GRIMSBY	525692.47	410567.26	2006		60498	1 Urbis LED	Ampera 48 LED 700mA	104 Watts	12.00 Metres	Steel	
Y	14	STREET LIGHTING	WESTGATE WEST	GRIMSBY	525740.49	410580.91	2006		60499	1 Urbis LED	Ampera 48 LED 700mA	104 Watts	12.00 Metres	Steel	
Y	15	STREET LIGHTING	WESTGATE WEST	GRIMSBY	525733.82	410558.08	2006		60500	1 Urbis LED	Ampera 48 LED 700mA	104 Watts	12.00 Metres	Steel	
Y	16	STREET LIGHTING	WESTGATE WEST	GRIMSBY	525776.42	410572.84	2006		60501	1 Urbis LED	Ampera 48 LED 700mA	104 Watts	12.00 Metres	Steel	
Y	17	STREET LIGHTING	WESTGATE WEST	GRIMSBY	525771.99	410549.9	2006		60502	1 Urbis LED	Ampera 48 LED 700mA	104 Watts	12.00 Metres	Steel	
Y	18	STREET LIGHTING	WESTGATE WEST	GRIMSBY	525820.73	410564.23	2006		60503	1 Urbis LED	Ampera 48 LED 700mA	104 Watts	12.00 Metres	Steel	
Y	19	STREET LIGHTING	WESTGATE WEST	GRIMSBY	525815.44	410540.55	2006		60504	1 Urbis LED	Ampera 48 LED 700mA	104 Watts	12.00 Metres	Steel	
Y	20	STREET LIGHTING	WESTGATE WEST	GRIMSBY	525864.41	410554.99	2006		60505	1 Urbis LED	Ampera 48 LED 700mA	104 Watts	12.00 Metres	Steel	
Y	21	STREET LIGHTING	WESTGATE WEST	GRIMSBY	525857.23	410531.69	2006		60506	1 Urbis LED	Ampera 48 LED 700mA	104 Watts	12.00 Metres	Steel	
Y	22	STREET LIGHTING	WESTGATE WEST	GRIMSBY	525904.51	410542.82	2006		60507	1 Urbis LED	Ampera 48 LED 700mA	104 Watts	12.00 Metres	Steel	
Y	23	STREET LIGHTING	WESTGATE WEST	GRIMSBY	525898.17	410521.63	2008		60508	1 Urbis LED	Ampera 48 LED 700mA	104 Watts	12.00 Metres	Steel	
Y	24	STREET LIGHTING	WESTGATE WEST	GRIMSBY	525947.72	410530.1	2006		60509	1 Urbis LED	Ampera 48 LED 700mA	104 Watts	12.00 Metres	Steel	
Y	25	STREET LIGHTING	WESTGATE WEST	GRIMSBY	525939.12	410508.43	2006		60510	1 Urbis LED	Ampera 48 LED 700mA	104 Watts	12.00 Metres	Steel	
Y	26	STREET LIGHTING	WESTGATE WEST	GRIMSBY	525988.59	410513.8	2006		60511	1 Urbis LED	Ampera 48 LED 700mA	104 Watts	12.00 Metres	Steel	
Y	27	STREET LIGHTING	WESTGATE WEST	GRIMSBY	525978.04	410492.14	2006		60512	1 Urbis LED	Ampera 48 LED 700mA	104 Watts	12.00 Metres	Steel	
Y	28	STREET LIGHTING	WESTGATE WEST	GRIMSBY	526030.52	410496.33	2006		60513	1 Urbis LED	Ampera 48 LED 700mA	104 Watts	12.00 Metres	Steel	
Y	29	STREET LIGHTING	WESTGATE WEST	GRIMSBY	526022.3	410470.57	2006		60514	1 Urbis LED	Ampera 48 LED 700mA	104 Watts	12.00 Metres	Steel	
Y	30	STREET LIGHTING	WESTGATE WEST	GRIMSBY	526066.52	410469.94	2006		60515	1 Urbis LED	Ampera 48 LED 700mA	104 Watts	12.00 Metres	Steel	
Y	31	STREET LIGHTING	WESTGATE WEST	GRIMSBY	526055.01	410452.13	2020	17/03/2020	67723	Urbis	Ampera Maxi 80 LED 700m	163 Watts	12.00 Metres	Galvanised Steel	
Y	32	STREET LIGHTING	WESTGATE WEST	GRIMSBY	526098.51	410443.23	2006		60517	1 Urbis LED	Ampera 48 LED 700mA	104 Watts	12.00 Metres	Steel	
Y	33	STREET LIGHTING	WESTGATE WEST	GRIMSBY	526083.36	410427.29	2006		60518	1 Urbis LED	Ampera 48 LED 700mA	104 Watts	12.00 Metres	Steel	

Y	1	STREET LIGHTING	WOAD LANE CORNER G/C	GRIMSBY	524350.21	410778.83	1980		61076	Urbis	Axia 16 LED 350mA	19 Watts	6.00 Metres	Galvanised Steel	
Y	2	STREET LIGHTING	WOAD LANE CORNER G/C	GRIMSBY	524381.61	410798.13	1980		61077	Urbis	Axia 16 LED 350mA	19 Watts	6.00 Metres	Galvanised Steel	
Y	1	STREET LIGHTING	WOODROW PARK SCARTHO ROAD	GRIMSBY	526495.98	406452.32	1992		61166	Urbis	Axia 8 LED 350mA	10 Watts	5.00 Metres	Galvanised Steel	
Y	2	STREET LIGHTING	WOODROW PARK SCARTHO ROAD	GRIMSBY	526513.95	406457.95	1992		61167	Urbis	Axia 8 LED 350mA	10 Watts	5.00 Metres	Galvanised Steel	
Y	3	STREET LIGHTING	WOODROW PARK SCARTHO ROAD	GRIMSBY	526532.56	406463.96	1992		61168	Urbis	Axia 8 LED 350mA	10 Watts	5.00 Metres	Galvanised Steel	
Y	4	STREET LIGHTING	WOODROW PARK SCARTHO ROAD	GRIMSBY	526550.28	406469.66	1992		61169	Urbis	Axia 8 LED 350mA	10 Watts	5.00 Metres	Galvanised Steel	
Y	1	STREET LIGHTING	YORK STREET FOOTPATH TO HAVEN	GRIMSBY	526320.34	409829.61	1963		61424	Urbis	Axia 8 LED 350mA	10 Watts	6.00 Metres	Galvanised Steel	
Y	2	STREET LIGHTING	YORK STREET FOOTPATH TO HAVEN	GRIMSBY	526303.33	409806.01	2002		61425	Urbis	Axia 8 LED 350mA	10 Watts	6.00 Metres	Galvanised Steel	
Y	1	STREET LIGHTING	PARK LANE FOOTPATH	CLEETHORPES	530874.62	406118.97	1993		54672	Urbis	Axia 16 LED 350mA	19 Watts	5.00 Metres	Galvanised Steel	
Y	2	STREET LIGHTING	PARK LANE FOOTPATH	CLEETHORPES	530873.98	406177.49	1993		54673	Urbis	Axia 16 LED 350mA	19 Watts	5.00 Metres	Galvanised Steel	
Y	3	STREET LIGHTING	PARK LANE FOOTPATH	CLEETHORPES	530842.09	406240.69	1993		54674	Urbis	Axia 16 LED 350mA	19 Watts	5.00 Metres	Galvanised Steel	
Y	4	STREET LIGHTING	PARK LANE FOOTPATH	CLEETHORPES	530835.37	406353.55	1993		54675	Urbis	Axia 16 LED 350mA	19 Watts	5.00 Metres	Galvanised Steel	
Y	1	STREET LIGHTING	INSTITUTE CDS	HABROUGH	515472.75	414164.94	1985		51349	1 Urbis LED	Axia 16 LED 500mA	28 Watts	5.00 Metres	Galvanised Steel	
Y	1	STREET LIGHTING	CHURCH LANE	HEALING	521397.24	410178.74	2014		62686	Urbis	Axia 16 LED 350mA	19 Watts	6.00 Metres	Galvanised Steel	
Y	2	STREET LIGHTING	CHURCH LANE	HEALING	521407.57	410145.52	2014		62687	Urbis	Axia 16 LED 350mA	19 Watts	6.00 Metres	Galvanised Steel	
Y	1	STREET LIGHTING	GREAT COATES LINK	HEALING	522904.42	410025.33	1983		49532	1 Urbis LED	Teceo 48 LED 700mA	104 Watts	10.00 Metres	Galvanised Steel	
Y	2	STREET LIGHTING	GREAT COATES LINK	HEALING	522929.23	410045.47	1983		49533	1 Urbis LED	Teceo 48 LED 700mA	104 Watts	10.00 Metres	Galvanised Steel	
Y	3	STREET LIGHTING	GREAT COATES LINK	HEALING	522933.69	410076.57	1983		49534	1 Urbis LED	Teceo 48 LED 700mA	104 Watts	10.00 Metres	Galvanised Steel	
Y	4	STREET LIGHTING	GREAT COATES LINK	HEALING	522959.61	410097.95	1983		49535	1 Urbis LED	Teceo 48 LED 700mA	104 Watts	10.00 Metres	Galvanised Steel	
Y	5	STREET LIGHTING	GREAT COATES LINK	HEALING	522964.27	410130.24	1983		49536	1 Urbis LED	Teceo 48 LED 700mA	104 Watts	10.00 Metres	Galvanised Steel	
Y	6	STREET LIGHTING	GREAT COATES LINK	HEALING	522989.02	410152.9	1983		49537	1 Urbis LED	Teceo 48 LED 700mA	104 Watts	10.00 Metres	Galvanised Steel	
Y	7	STREET LIGHTING	GREAT COATES LINK	HEALING	522994.09	410186.72	1983		49538	1 Urbis LED	Teceo 48 LED 700mA	104 Watts	10.00 Metres	Galvanised Steel	
Y	8	STREET LIGHTING	GREAT COATES LINK	HEALING	523016.39	410206.68	1983		49539	1 Urbis LED	Teceo 48 LED 700mA	104 Watts	10.00 Metres	Galvanised Steel	
Y	9	STREET LIGHTING	GREAT COATES LINK	HEALING	523018.42	410235.38	1983		49540	1 Urbis LED	Teceo 48 LED 700mA	104 Watts	10.00 Metres	Galvanised Steel	
Y	10	STREET LIGHTING	GREAT COATES LINK	HEALING	523041.99	410258.1	1983		49541	1 Urbis LED	Teceo 48 LED 700mA	104 Watts	10.00 Metres	Galvanised Steel	
Y	11	STREET LIGHTING	GREAT COATES LINK	HEALING	523045.23	410291.72	1983		49542	1 Urbis LED	Teceo 48 LED 700mA	104 Watts	10.00 Metres	Galvanised Steel	
Y	12	STREET LIGHTING	GREAT COATES LINK	HEALING	523067.64	410312.51	1983		49543	1 Urbis LED	Teceo 48 LED 700mA	104 Watts	10.00 Metres	Galvanised Steel	
Y	13	STREET LIGHTING	GREAT COATES LINK	HEALING	523068.94	410345.55	1983		49544	1 Urbis LED	Teceo 48 LED 700mA	104 Watts	10.00 Metres	Galvanised Steel	
Y	14	STREET LIGHTING	GREAT COATES LINK	HEALING	523090.91	410368.18	1983		49545	1 Urbis LED	Teceo 48 LED 700mA	104 Watts	10.00 Metres	Galvanised Steel	
Y	15	STREET LIGHTING	GREAT COATES LINK	HEALING	523092.43	410400.19	1983		49546	1 Urbis LED	Teceo 48 LED 700mA	104 Watts	10.00 Metres	Galvanised Steel	
Y	16	STREET LIGHTING	GREAT COATES LINK	HEALING	523113.89	410425.05	1983		49547	1 Urbis LED	Teceo 48 LED 700mA	104 Watts	10.00 Metres	Galvanised Steel	
Y	17	STREET LIGHTING	GREAT COATES LINK	HEALING	523115.02	410458.24	1983		49548	1 Urbis LED	Teceo 48 LED 700mA	104 Watts	10.00 Metres	Galvanised Steel	
Y	18	STREET LIGHTING	GREAT COATES LINK	HEALING	523136.59	410482.95	1983		49549	1 Urbis LED	Teceo 48 LED 700mA	104 Watts	10.00 Metres	Galvanised Steel	
Y	19	STREET LIGHTING	GREAT COATES LINK	HEALING	523134.92	410514.82	1983		49550	1 Urbis LED	Teceo 48 LED 700mA	104 Watts	10.00 Metres	Galvanised Steel	
Y	20	STREET LIGHTING	GREAT COATES LINK	HEALING	523156.41	410540.63	1983		49551	1 Urbis LED	Teceo 48 LED 700mA	104 Watts	10.00 Metres	Galvanised Steel	
Y	21	STREET LIGHTING	GREAT COATES LINK	HEALING	523153.45	410571.95	1983		49552	1 Urbis LED	Teceo 48 LED 700mA	104 Watts	10.00 Metres	Galvanised Steel	
Y	22	STREET LIGHTING	GREAT COATES LINK	HEALING	523174.8	410598.51	1983		49553	1 Urbis LED	Teceo 48 LED 700mA	104 Watts	10.00 Metres	Galvanised Steel	
Y	23	STREET LIGHTING	GREAT COATES LINK	HEALING	523172.02	410631.12	1983		49554	1 Urbis LED	Teceo 48 LED 700mA	104 Watts	10.00 Metres	Galvanised Steel	
Y	24	STREET LIGHTING	GREAT COATES LINK	HEALING	523198.89	410677.5	1983		49555	1 Urbis LED	Teceo 48 LED 700mA	104 Watts	10.00 Metres	Galvanised Steel	
Y	25	STREET LIGHTING	GREAT COATES LINK	HEALING	523192.89	410700.39	1983		49556	1 Urbis LED	Teceo 48 LED 700mA	104 Watts	10.00 Metres	Galvanised Steel	
Y	26	STREET LIGHTING	GREAT COATES LINK	HEALING	523210.35	410716.47	1983		49557	1 Urbis LED	Teceo 48 LED 700mA	104 Watts	10.00 Metres	Galvanised Steel	
Y	27	STREET LIGHTING	GREAT COATES LINK	HEALING	523205.69	410744.63	1983		49558	1 Urbis LED	Teceo 48 LED 700mA	104 Watts	10.00 Metres	Galvanised Steel	
Y	28	STREET LIGHTING	GREAT COATES LINK	HEALING	523227.16	410770.99	1983		49559	1 Urbis LED	Teceo 48 LED 700mA	104 Watts	10.00 Metres	Galvanised Steel	
Y	29	STREET LIGHTING	GREAT COATES LINK	HEALING	523222.1	410799.15	1983		49560	1 Urbis LED	Teceo 48 LED 700mA	104 Watts	10.00 Metres	Galvanised Steel	
Y	30	STREET LIGHTING	GREAT COATES LINK	HEALING	523242.56	410822.19	1983		49561	1 Urbis LED	Teceo 48 LED 700mA	104 Watts	10.00 Metres	Galvanised Steel	
Y	31	STREET LIGHTING	GREAT COATES LINK	HEALING	523238.51	410852.92	1983		49562	1 Urbis LED	Teceo 48 LED 700mA	104 Watts	10.00 Metres	Galvanised Steel	
Y	32	STREET LIGHTING	GREAT COATES LINK	HEALING	523259.57	410878.56	1983		49563	1 Urbis LED	Teceo 48 LED 700mA	104 Watts	10.00 Metres	Galvanised Steel	
Y	33	STREET LIGHTING	GREAT COATES LINK	HEALING	523256.33	410913.53	1983		49564	1 Urbis LED	Teceo 48 LED 700mA	104 Watts	10.00 Metres	Galvanised Steel	
Y	34	STREET LIGHTING	GREAT COATES LINK	HEALING	523277.7	410938.07	2022	16/02/2022	68818	Urbis	Teceo 48 LED 700mA	104 Watts	10.00 Metres	Galvanised Steel	
Y	35	STREET LIGHTING	GREAT COATES LINK	HEALING	523273.75	410969	1983		49566	1 Urbis LED	Teceo 48 LED 700mA	104 Watts	10.00 Metres	Galvanised Steel	
Y	36	STREET LIGHTING	GREAT COATES LINK	HEALING	523296.63	410990.17	1998		49567	1 Urbis LED	Teceo 48 LED 700mA	104 Watts	10.00 Metres	Galvanised Steel	
Y	37	STREET LIGHTING	GREAT COATES LINK	HEALING	523311.71	411032.45	1998		61629	1 Urbis LED	Teceo 48 LED 700mA	104 Watts	10.00 Metres	Galvanised Steel	
Y	37	STREET LIGHTING	GREAT COATES LINK	HEALING	523311.71	411032.45	1998		62161	1 Urbis LED	Teceo 48 LED 700mA	104 Watts	10.00 Metres	Galvanised Steel	
Y	38	STREET LIGHTING	GREAT COATES LINK	HEALING	523327.63	411095.07	1998		49568	1 Urbis LED	Teceo 48 LED 700mA	104 Watts	10.00 Metres	Galvanised Steel	
Y	39	STREET LIGHTING	GREAT COATES LINK	HEALING	523311.81	411100.76	1998		49569	1 Urbis LED	Teceo 48 LED 700mA	104 Watts	10.00 Metres	Stainless Steel	
Y	40	STREET LIGHTING	GREAT COATES LINK	HEALING	523334.45	411119.75	1998		49570	1 Urbis LED	Teceo 48 LED 700mA	104 Watts	10.00 Metres	Galvanised Steel	
Y	41	STREET LIGHTING	GREAT COATES LINK	HEALING	523329.99	411147.9	1998		49571	1 Urbis LED	Teceo 48 LED 700mA	104 Watts	10.00 Metres	Galvanised Steel	
Y	42	STREET LIGHTING	GREAT COATES LINK	HEALING	523348.02	411171.46	1998		49572	1 Urbis LED	Teceo 48 LED 700mA	104 Watts	10.00 Metres	Galvanised Steel	
Y	43	STREET LIGHTING	GREAT COATES LINK	HEALING	523344.73	411204.71	1998		49573	1 Urbis LED	Teceo 48 LED 700mA	104 Watts	10.00 Metres	Galvanised Steel	
Y	44	STREET LIGHTING	GREAT COATES LINK	HEALING	523356.72	411197.28	1998		49574	1 Urbis LED	Teceo 48 LED 700mA	104 Watts	10.00 Metres	Galvanised Steel	
Y	45	STREET LIGHTING	GREAT COATES LINK	HEALING	523348.65	411228.45	1998		49575	1 Urbis LED	Teceo 48 LED 700mA	104 Watts	10.00 Metres	Galvanised Steel	
Y	46	STREET LIGHTING	GREAT COATES LINK	HEALING	523367.46	411221.79	1998		49576	1 Urbis LED	Teceo 48 LED 700mA	104 Watts	10.00 Metres	Galvanised Steel	
Y	1	STREET LIGHTING	GREAT COATES LINK ROUNDABOUT	HEALING	523357.05	411261.93	1998		49577	1 Urbis LED	Teceo 48 LED 500mA	79 Watts	10.00 Metres	Galvanised Steel	
Y	2	STREET LIGHTING	GREAT COATES LINK ROUNDABOUT	HEALING	523376.9	411243.31	1998		61630	1 Urbis LED	Teceo 48 LED 700mA	104 Watts	10.00 Metres	Galvanised Steel	
Y	2	STREET LIGHTING	GREAT COATES LINK ROUNDABOUT	HEALING	523376.9	411243.31	1998		62162	Urbis		104 Watts	10.00 Metres	Galvanised Steel	
Y	3	STREET LIGHTING	GREAT COATES LINK ROUNDABOUT	HEALING	523339.28	411244.08	1998		49578	1 Urbis LED	Teceo 48 LED 700mA	104 Watts	10.00 Metres	Galvanised Steel	
Y	1	STREET LIGHTING	GREAT COATES ROAD ROUNDABOUT	HEALING	522873.13	409992.12	1983		61632	1 Urbis LED	Teceo 48 LED 700mA	104 Watts	10.00 Metres	Galvanised Steel	
Y	1	STREET LIGHTING	GREAT COATES ROAD ROUNDABOUT	HEALING	522873.13	409992.12	1983		62164	1 Urbis LED	Teceo 48 LED 700mA	104 Watts	10.00 Metres	Galvanised Steel	
Y	2	STREET LIGHTING	GREAT COATES ROAD ROUNDABOUT	HEALING	522889.91	410007.97	1983		49695	1 Urbis LED	Teceo 48 LED 700mA	104 Watts	10.00 Metres	Galvanised Steel	
Y	3	STREET LIGHTING	GREAT COATES ROAD ROUNDABOUT	HEALING	522916.99	410010.51	1983		49696	1 Urbis LED	Teceo 48 LED 700mA	104 Watts	10.00 Metres	Galvanised Steel	
Y	4	STREET LIGHTING	GREAT COATES ROAD ROUNDABOUT	HEALING	522915.08	409972.64	1983		49697	1 Urbis LED	Teceo 48 LED 700mA	104 Watts	10.00 Metres	Galvanised Steel	
Y	5	STREET LIGHTING	GREAT COATES ROAD ROUNDABOUT	HEALING	522890.7	409972.98	1983		49698	1 Urbis LED	Teceo 48 LED 700mA	104 Watts	10.00 Metres	Galvanised Steel	
Y	1	STREET LIGHTING	AIRE CLOSE FOOTPATH	IMMINGHAM	517465.73	414284.58	1980		42798	Urbis	Axia 8 LED 350mA	10 Watts	5.00 Metres	Galvanised Steel	
Y	2	STREET LIGHTING	AIRE CLOSE FOOTPATH	IMMINGHAM	517488.26	414295.02	1980		42799	Urbis	Axia 8 LED 350mA	10 Watts	5.00 Metres	Galvanised Steel	
Y	3	STREET LIGHTING	AIRE CLOSE FOOTPATH	IMMINGHAM	517526.49	414307.62	1980		42800	Urbis	Axia 8 LED 350mA	10 Watts	5.00 Metres	Galvanised Steel	
Y	4	STREET LIGHTING	AIRE CLOSE FOOTPATH	IMMINGHAM	517502.54	414311.21	1980		42801	Urbis	Axia 8 LED 350mA	10 Watts	5.00 Metres	Galvanised Steel	
Y	5	STREET LIGHTING	AIRE CLOSE FOOTPATH	IMMINGHAM	517483.07	414314.39	1980		42802	Urbis	Axia 8 LED 350mA	10 Watts	5.00 Metres	Galvanised Steel	
Y	6	STREET LIGHTING	AIRE CLOSE FOOTPATH	IMMINGHAM	517465.37	414328.42	2010		66322	WRTL	Other	21 Watts	6.00 Metres	Galvanised Steel	
Y	1	STREET LIGHTING	ANCHOLME AVENUE FOOTPATH	IMMINGHAM	517339	414243.97	1980		43204	Urbis	Axia 16 LED 350mA	19 Watts	5.00 Metres	Galvanised Steel	
Y	2	STREET LIGHTING	ANCHOLME AVENUE FOOTPATH	IMMINGHAM	517297.79	414237.65	1980		43205	Urbis	Axia 16 LED 350mA	19 Watts	5.00 Metres	Galvanised Steel	
Y	3	STREET LIGHTING	ANCHOLME AVENUE FOOTPATH	IMMINGHAM	517254.03	414231.79	1980		43206	Urbis	Axia 16 LED 350mA	19 Watts	5.00 Metres	Galvanised Steel	
Y	4	STREET LIGHTING	ANCHOLME AVENUE FOOTPATH	IMMINGHAM	517256.91	414272.71	1980		43207	Urbis	Axia 16 LED 350mA	19 Watts	5.00 Metres	Galvanised Steel	
Y	5	STREET LIGHTING	ANCHOLME AVENUE FOOTPATH	IMMINGHAM	517246.66	414317.92	2013	13/08/2013	43208	Urbis	Axia 16 LED 350mA	19 Watts	6.00 Metres	Steel	
Y	6	STREET LIGHTING	ANCHOLME AVENUE FOOTPATH	IMMINGHAM	517248.19	414358.74			68303	Urbis	Axia 8 LED 350mA	10 Watts	6.00 Metres	Steel	
Y	7	STREET LIGHTING	ANCHOLME AVENUE FOOTPATH	IMMINGHAM	517248.43	414400.38	1980		43210	Urbis	Axia 16 LED 350mA	19 Watts	5.00 Metres	Galvanised Steel	
Y	8	STREET LIGHTING	ANCHOLME AVENUE FOOTPATH	IMMINGHAM	517246.53	414428.67	1980		43211	Urbis	Axia 16 LED 350mA	19 Watts	5.00 Metres	Galvanised Steel	
Y	1	STREET LIGHTING	AYLESBY HOUSE FOOTPATH LEADING	IMMINGHAM	518109.06	414670.97	2008		43520	Urbis	Axia 16 LED 350mA	19 Watts	6.00 Metres	Steel	
Y	2	STREET LIGHTING	AYLESBY HOUSE FOOTPATH LEADING	IMMINGHAM	518130.56	414660.27	2008		43521	Urbis	Axia 16 LED 350mA	19 Watts	6.00 Metres	Steel	
Y	3	STREET LIGHTING	AYLESBY HOUSE FOOTPATH LEADING	IMMINGHAM	518142.23	414640.52	2008		43522	Urbis	Axia 16 LED 350mA	19 Watts	6.00 Metres	Steel	
Y	4	STREET LIGHTING	AYLESBY HOUSE FOOTPATH LEADING	IMMINGHAM	518167.6	414650.3	2008		43523	Urbis	Axia 16 LED 350mA	19 Watts	6.00 Metres	Steel	
Y	5	STREET LIGHTING	AYLESBY HOUSE FOOTPATH LEADING	IMMINGHAM	518184.18	414652.98	2008		43524	Urbis	Axia 16 LED 350mA	19 Watts	6.00 Metres	Steel	
Y	6	STREET LIGHTING	AYLESBY HOUSE FOOTPATH LEADING	IMMINGHAM	518214.45	414666.14	2008		43525	Urbis	Axia 8 LED 350mA	10 Watts	6.00 Metres	Steel	
Y	8	STREET LIGHTING	AYLESBY HOUSE FOOTPATH LEADING	IMMINGHAM	518225.95	414703.61	2008		43526	Urbis	Axia 8 LED 350mA	10 Watts	6.00 Metres	Steel	
Y	1	STREET LIGHTING	BATTERY STREET AMENITY	IMMINGHAM	518996.12	414911.97	2002		43819	Urbis	Axia 8 LED 350mA	10 Watts	6.00 Metres	Galvanised Steel	
Y	2	STREET LIGHTING	BATTERY STREET AMENITY	IMMINGHAM	518988.04	414938.77	2002		43818	Urbis	Axia 8 LED 350mA	10 Watts	6.00 Metres	Galvanised Steel	
Y	3	STREET LIGHTING	BATTERY STREET AMENITY	IMMINGHAM	518973.74	414951.67	2002		43817	Urbis	Axia 8 LED 350mA	10 Watts	6.00 Metres	Galvanised Steel	
Y	4	STREET LIGHTING	BATTERY STREET AMENITY	IMMINGHAM	518965.76	414982.53	2002		43816	Urbis	Axia 8 LED 350mA	10 Watts	6.00 Metres	Galvanised Steel	
Y	5	STREET LIGHTING	BATTERY STREET AMENITY	IMMINGHAM	518942.64	415056.68		21/03/2023	69215	Urbis	Axia 16 LED 350mA	19 Watts			
Y	6	STREET LIGHTING	BATTERY STREET AMENITY	IMMINGHAM	518962.63	415077.72	1991		43822	Urbis	Axia 8 LED 350mA	10 Watts	5.00 Metres	Galvanised Steel	
Y	1	STREET LIGHTING	FOOTPATH FROM BIRKDALE DRIVE TO	IMMINGHAM	518578.21	415128.69	1992		44173	Urbis	Axia 8 LED 350mA	10 Watts	5.00 Metres	Galvanised Steel	
Y	2	STREET LIGHTING	FOOTPATH FROM BIRKDALE DRIVE TO	IMMINGHAM	518558.59	415144.58	1992		44174	Urbis	Axia 8 LED 350mA	10 Watts	5.00 Metres	Galvanised Steel	
Y	1	STREET LIGHTING	BLOSSOM LANE FOOTPATH	IMMINGHAM	517924.7	414274.15	2007		44232	Urbis	Axia 16 LED 350mA	19 Watts	6.00 Metres	Steel	
Y	2	STREET LIGHTING	BLOSSOM LANE FOOTPATH	IMMINGHAM	517936.9	414238.74	2007		44233	Urbis	Axia 16 LED 350mA	19 Watts	6.00 Metres	Steel	
Y	3	STREET LIGHTING	BLOSSOM LANE FOOTPATH	IMMINGHAM	517957.94	414209.59	2007		44234	Urbis	Axia 16 LED 350mA	19 Watts	6.00 Metres	Steel	
Y	4	STREET LIGHTING	BLOSSOM LANE FOOTPATH	IMMINGHAM	517977.15	414179.51	2007		44235	Urbis	Axia 16 LED 350mA	19 Watts	6.00 Metres	Steel	
Y	5	STREET LIGHTING	BLOSSOM LANE FOOTPATH	IMMINGHAM	517995.5	414152.92	2007		44236	Urbis	Axia 16 LED 350mA	19 Watts	6.00 Metres	Steel	
Y	6	STREET LIGHTING	BLOSSOM LANE FOOTPATH	IMMINGHAM	518025	414129.34	2007		44237	Urbis	Axia 16 LED 350mA	19 Watts	6.00 Metres	Steel	
Y	7	STREET LIGHTING	BLOSSOM LANE FOOTPATH	IMMINGHAM	518045	414100.5	2007		44238	Urbis	Axia 16 LED 350mA	19 Watts	6.00 Metres	Steel	
Y	8	STREET LIGHTING	BLOSSOM LANE FOOTPATH	IMMINGHAM	518053.94	414065.88	2007		44239	Urbis	Axia 16 LED 350mA	19 Watts	6.00 Metres	Steel	
Y	9	STREET LIGHTING	BLOSSOM LANE FOOTPATH	IMMINGHAM	518072.76	414036.13	2007		44240	Urbis	Axia 16 LED 350mA	19 Watts	6.00 Metres	Steel	

Y	10	STREET LIGHTING	BLOSSOM LANE FOOTPATH	IMMINGHAM	518095.89	414003.63	2007		44241	Urbis	Axia 16 LED 350mA	19 Watts	6.00 Metres	Steel	
Y	11	STREET LIGHTING	BLOSSOM LANE FOOTPATH	IMMINGHAM	518111.29	413974.8	2007		44242	Urbis	Axia 16 LED 350mA	19 Watts	6.00 Metres	Steel	
Y	12	STREET LIGHTING	BLOSSOM LANE FOOTPATH	IMMINGHAM	518138.82	413946.88	2007		44243	Urbis	Axia 16 LED 350mA	19 Watts	6.00 Metres	Steel	
Y	13	STREET LIGHTING	BLOSSOM LANE FOOTPATH	IMMINGHAM	518160.16	413918.5	2007		44244	Urbis	Axia 16 LED 350mA	19 Watts	6.00 Metres	Steel	
Y	14	STREET LIGHTING	BLOSSOM LANE FOOTPATH	IMMINGHAM	518179.95	413893.79	2007		44245	Urbis	Axia 16 LED 350mA	19 Watts	6.00 Metres	Steel	
Y	15	STREET LIGHTING	BLOSSOM LANE FOOTPATH	IMMINGHAM	518201.44	413866.34	2007		44246	Urbis	Axia 16 LED 350mA	19 Watts	6.00 Metres	Steel	
Y	16	STREET LIGHTING	BLOSSOM LANE FOOTPATH	IMMINGHAM	518223.62	413838.54	2007		44247	Urbis	Axia 16 LED 350mA	19 Watts	6.00 Metres	Steel	
Y	17	STREET LIGHTING	BLOSSOM LANE FOOTPATH	IMMINGHAM	518244.3	413812.9	2007		44248	Urbis	Axia 16 LED 350mA	19 Watts	6.00 Metres	Steel	
Y	18	STREET LIGHTING	BLOSSOM LANE FOOTPATH	IMMINGHAM	518264.6	413786.43	2007		44249	Urbis	Axia 16 LED 350mA	19 Watts	6.00 Metres	Steel	
Y	1	STREET LIGHTING	CALDER CLOSE FOOTPATH	IMMINGHAM	517338.94	414333.16	1980		45112	Urbis	Axia 8 LED 350mA	10 Watts	5.00 Metres	Galvanised Steel	
Y	1	STREET LIGHTING	CHURCH LANE CORNER	IMMINGHAM	517486.67	415013.83	2014	31/03/2014	46047	Urbis	Axia 16 LED 350mA	19 Watts	6.00 Metres	Steel	
Y	2	STREET LIGHTING	CHURCH LANE CORNER	IMMINGHAM	517491.41	415038.78	1992		46048	Urbis	Axia 16 LED 350mA	19 Watts	5.00 Metres	Galvanised Steel	
Y	3	STREET LIGHTING	CHURCH LANE CORNER	IMMINGHAM	517512.41	415047.28	2000		46049	Urbis	Axia 16 LED 350mA	19 Watts	8.00 Metres	Galvanised Steel	
Y	1	STREET LIGHTING	FOOTPATH FROM FERNDOWN DRIVE	IMMINGHAM	518685.84	415035.94	1975		48804	1 Urbis LED	Axia 16 LED 500mA	28 Watts	5.00 Metres	Galvanised Steel	
Y	1	STREET LIGHTING	FLATS PATH	IMMINGHAM	518189.34	414748.06	2008		48639	Urbis	Axia 8 LED 350mA	10 Watts	6.00 Metres	Galvanised Steel	
Y	2	STREET LIGHTING	FLATS PATH	IMMINGHAM	518180.47	414759.92	2008		48640	Urbis	Axia 8 LED 350mA	10 Watts	6.00 Metres	Galvanised Steel	
Y	3	STREET LIGHTING	FLATS PATH	IMMINGHAM	518169.57	414773.79	2003		48641	Urbis	Axia 8 LED 350mA	10 Watts	6.00 Metres	Galvanised Steel	
Y	4	STREET LIGHTING	FLATS PATH	IMMINGHAM	518156.41	414784.74	2008		48642	Urbis	Axia 8 LED 350mA	10 Watts	6.00 Metres	Galvanised Steel	
Y	5	STREET LIGHTING	FLATS PATH	IMMINGHAM	518133.56	414800.47	2008		48643	Urbis	Axia 8 LED 350mA	10 Watts	6.00 Metres	Galvanised Steel	
Y	6	STREET LIGHTING	FLATS PATH	IMMINGHAM	518124.86	414814.07	2008		48644	Urbis	Axia 8 LED 350mA	10 Watts	6.00 Metres	Galvanised Steel	
Y	7	STREET LIGHTING	FLATS PATH	IMMINGHAM	518121.04	414830.23	2008		48645	Urbis	Axia 8 LED 350mA	10 Watts	6.00 Metres	Galvanised Steel	
Y	8	STREET LIGHTING	FLATS PATH	IMMINGHAM	518122.22	414849.16	2008		48646	Urbis	Axia 8 LED 350mA	10 Watts	6.00 Metres	Galvanised Steel	
Y	9	STREET LIGHTING	FLATS PATH	IMMINGHAM	518118.75	414868.02	2008		48647	Urbis	Axia 8 LED 350mA	10 Watts	6.00 Metres	Galvanised Steel	
Y	10	STREET LIGHTING	FLATS PATH	IMMINGHAM	518097.68	414856.99	2008		48648	Urbis	Axia 8 LED 350mA	10 Watts	6.00 Metres	Galvanised Steel	
Y	11	STREET LIGHTING	FLATS PATH	IMMINGHAM	518090.7	414870.66	1999		48649	Urbis	Axia 8 LED 350mA	10 Watts	6.00 Metres	Galvanised Steel	
Y	12	STREET LIGHTING	FLATS PATH	IMMINGHAM	518064.05	414908.25	1965		48650	Urbis	Axia 8 LED 350mA	10 Watts	5.00 Metres	Galvanised Steel	
Y	13	STREET LIGHTING	FLATS PATH	IMMINGHAM	518038.22	414945.27	1965		48651	Urbis	Axia 8 LED 350mA	10 Watts	5.00 Metres	Galvanised Steel	
Y	14	STREET LIGHTING	FLATS PATH	IMMINGHAM	518009.24	414987.06	1965		48652	Urbis	Axia 8 LED 350mA	10 Watts	5.00 Metres	Galvanised Steel	
Y	15	STREET LIGHTING	FLATS PATH	IMMINGHAM	517984.18	415022.94	1965		48653	Urbis	Axia 8 LED 350mA	10 Watts	5.00 Metres	Galvanised Steel	
Y	1	STREET LIGHTING	GREAT COATES HOUSE	IMMINGHAM	518142.4	414842.15	2008		49528	Urbis	Axia 8 LED 350mA	10 Watts	6.00 Metres	Galvanised Steel	
Y	2	STREET LIGHTING	GREAT COATES HOUSE	IMMINGHAM	518150.38	414829.64	2004		49529	Urbis	Axia 8 LED 350mA	10 Watts	6.00 Metres	Galvanised Steel	
Y	3	STREET LIGHTING	GREAT COATES HOUSE	IMMINGHAM	518163.02	414813.59	2008		49530	Urbis	Axia 8 LED 350mA	10 Watts	6.00 Metres	Galvanised Steel	
Y	4	STREET LIGHTING	GREAT COATES HOUSE	IMMINGHAM	518191.63	414803.29	2008		49531	Urbis	Axia 8 LED 350mA	10 Watts	6.00 Metres	Galvanised Steel	
Y	1	STREET LIGHTING	HABROUGH HOUSE	IMMINGHAM	518013.16	415095.09	2008		49972	1 Urbis LED	Teceo 32 LED 500mA	52 Watts	8.00 Metres	Steel	
Y	2	STREET LIGHTING	HABROUGH HOUSE	IMMINGHAM	518047.85	415044.52	1984		49973	1 Urbis LED	Teceo 32 LED 500mA	52 Watts	8.00 Metres	Galvanised Steel	
Y	3	STREET LIGHTING	HABROUGH HOUSE	IMMINGHAM	518080.9	415051.52	1996		49974	Urbis	Axia 8 LED 350mA	10 Watts	5.00 Metres	Galvanised Steel	
Y	4	STREET LIGHTING	HABROUGH HOUSE	IMMINGHAM	518046.83	415126.35	1984		49975	1 Urbis LED	Teceo 32 LED 500mA	52 Watts	8.00 Metres	Galvanised Steel	
Y	1	STREET LIGHTING	HEALING HOUSE	IMMINGHAM	517983.84	415074.19	2008		50443	1 Urbis LED	Teceo 24 LED 500mA	40 Watts	8.00 Metres	Steel	
Y	2	STREET LIGHTING	HEALING HOUSE	IMMINGHAM	518018.77	415015.22	2008		50444	Urbis	Axia 8 LED 350mA	10 Watts	6.00 Metres	Galvanised Steel	
Y	1	STREET LIGHTING	IRBY HOUSE	IMMINGHAM	518094.27	415096.29	1996		43586	1 Urbis LED	Teceo 24 LED 500mA	40 Watts	8.00 Metres	Galvanised Steel	
Y	1	STREET LIGHTING	KINGS ROAD ROUNDABOUT	IMMINGHAM	519574.07	414723.6	1983		51836	1 Urbis LED	Teceo 40 LED 500mA	64 Watts	10.00 Metres	Galvanised Steel	
Y	2	STREET LIGHTING	KINGS ROAD ROUNDABOUT	IMMINGHAM	519583.79	414672.05	1983		51837	1 Urbis LED	Teceo 40 LED 500mA	64 Watts	10.00 Metres	Galvanised Steel	
Y	3	STREET LIGHTING	KINGS ROAD ROUNDABOUT	IMMINGHAM	519566.57	414693.42	1983		61670	1 Urbis LED	Teceo 40 LED 500mA	64 Watts	10.00 Metres	Galvanised Steel	
Y	3	STREET LIGHTING	KINGS ROAD ROUNDABOUT	IMMINGHAM	519566.57	414693.42	1983		62202	1 Urbis LED	Teceo 40 LED 500mA	64 Watts	10.00 Metres	Galvanised Steel	
Y	4	STREET LIGHTING	KINGS ROAD ROUNDABOUT	IMMINGHAM	519561.71	414699.29	1983		51838	1 Urbis LED	Teceo 40 LED 500mA	64 Watts	10.00 Metres	Galvanised Steel	
Y	5	STREET LIGHTING	KINGS ROAD ROUNDABOUT	IMMINGHAM	519528.5	414698.38	1983		51839	1 Urbis LED	Teceo 40 LED 500mA	64 Watts	10.00 Metres	Galvanised Steel	
Y	6	STREET LIGHTING	KINGS ROAD ROUNDABOUT	IMMINGHAM	519519.18	414715.8	1983		51840	1 Urbis LED	Teceo 40 LED 500mA	64 Watts	10.00 Metres	Galvanised Steel	
Y	7	STREET LIGHTING	KINGS ROAD ROUNDABOUT	IMMINGHAM	519534.37	414736.36	1983		51841	1 Urbis LED	Teceo 40 LED 500mA	64 Watts	10.00 Metres	Galvanised Steel	
Y	8	STREET LIGHTING	KINGS ROAD ROUNDABOUT	IMMINGHAM	519552.41	414742.72	1983		51842	1 Urbis LED	Teceo 40 LED 500mA	64 Watts	10.00 Metres	Galvanised Steel	
Y	1	STREET LIGHTING	LACEBY HOUSE	IMMINGHAM	518139.59	414766.6	2008		51957	Urbis	Axia 16 LED 350mA	19 Watts	6.00 Metres	Galvanised Steel	
Y	1	STREET LIGHTING	MAGNOLIA RISE FOOTPATH	IMMINGHAM	518153.91	414123.21	2007		53085	Urbis	Axia 16 LED 350mA	19 Watts	6.00 Metres	Steel	
Y	2	STREET LIGHTING	MAGNOLIA RISE FOOTPATH	IMMINGHAM	518123.54	414105.38	2007		53086	Urbis	Axia 16 LED 350mA	19 Watts	6.00 Metres	Steel	
Y	3	STREET LIGHTING	MAGNOLIA RISE FOOTPATH	IMMINGHAM	518091.34	414083.83	2007		53087	Urbis	Axia 16 LED 350mA	19 Watts	6.00 Metres	Steel	
Y	1	STREET LIGHTING	FOOTPATH FROM MARGARET STREET	IMMINGHAM	518419.48	413880.65	1991		48815	Urbis	Axia 16 LED 350mA	19 Watts	5.00 Metres	Galvanised Steel	
Y	2	STREET LIGHTING	FOOTPATH FROM MARGARET STREET	IMMINGHAM	518454.01	413873.99	1991		48816	Urbis	Axia 16 LED 350mA	19 Watts	5.00 Metres	Galvanised Steel	
Y	3	STREET LIGHTING	FOOTPATH FROM MARGARET STREET	IMMINGHAM	518489.35	413866.34	1991		48817	Urbis	Axia 16 LED 350mA	19 Watts	5.00 Metres	Galvanised Steel	
Y	1	STREET LIGHTING	MARGARET STREET MULL WAY	IMMINGHAM	518489.37	413732.91	1991		53287	Urbis	Axia 8 LED 350mA	10 Watts	5.00 Metres	Galvanised Steel	
Y	1	STREET LIGHTING	PELHAM INDUSTRIAL ESTATE	IMMINGHAM	518748.1	415431.55	1993		55144	1 Urbis LED	Teceo 48 LED 500mA	79 Watts	10.00 Metres	Galvanised Steel	
Y	2	STREET LIGHTING	PELHAM INDUSTRIAL ESTATE	IMMINGHAM	518751.9	415470.92	1993		55145	1 Urbis LED	Teceo 48 LED 500mA	79 Watts	10.00 Metres	Galvanised Steel	
Y	3	STREET LIGHTING	PELHAM INDUSTRIAL ESTATE	IMMINGHAM	518744.56	415500.41	1993		55146	1 Urbis LED	Teceo 48 LED 500mA	79 Watts	10.00 Metres	Galvanised Steel	
Y	4	STREET LIGHTING	PELHAM INDUSTRIAL ESTATE	IMMINGHAM	518714.18	415504.34	1993		55147	1 Urbis LED	Teceo 48 LED 500mA	79 Watts	10.00 Metres	Galvanised Steel	
Y	5	STREET LIGHTING	PELHAM INDUSTRIAL ESTATE	IMMINGHAM	518680.25	415511.3	1993		55148	1 Urbis LED	Teceo 48 LED 500mA	79 Watts	10.00 Metres	Galvanised Steel	
Y	6	STREET LIGHTING	PELHAM INDUSTRIAL ESTATE	IMMINGHAM	518650.38	415534.97	1993		55149	1 Urbis LED	Teceo 48 LED 500mA	79 Watts	10.00 Metres	Galvanised Steel	
Y	7	STREET LIGHTING	PELHAM INDUSTRIAL ESTATE	IMMINGHAM	518641.01	415549.91	1993		55150	1 Urbis LED	Teceo 48 LED 500mA	79 Watts	10.00 Metres	Galvanised Steel	
Y	8	STREET LIGHTING	PELHAM INDUSTRIAL ESTATE	IMMINGHAM	518618.48	415555.48	1993		55151	1 Urbis LED	Teceo 48 LED 500mA	79 Watts	10.00 Metres	Galvanised Steel	
Y	1	STREET LIGHTING	PELHAM RAILWAY FOOTPATH	IMMINGHAM	519217.3	415287.38	1992		55155	Urbis	Axia 8 LED 350mA	10 Watts	5.00 Metres	Galvanised Steel	
Y	2	STREET LIGHTING	PELHAM RAILWAY FOOTPATH	IMMINGHAM	519237.81	415300.99	1992		55156	Urbis	Axia 8 LED 350mA	10 Watts	5.00 Metres	Galvanised Steel	
Y	3	STREET LIGHTING	PELHAM RAILWAY FOOTPATH	IMMINGHAM	519257.36	415313.31	1992		55157	Urbis	Axia 8 LED 350mA	10 Watts	5.00 Metres	Galvanised Steel	
Y	1	STREET LIGHTING	SCHOOL WALK	IMMINGHAM	518463.55	414696.45	2014	31/03/2014	56756	Urbis	Axia 16 LED 350mA	19 Watts	6.00 Metres	Steel	
Y	2	STREET LIGHTING	SCHOOL WALK	IMMINGHAM	518500.89	414679.1	2013	25/06/2013	56757	Urbis	Axia 16 LED 350mA	19 Watts	6.00 Metres	Steel	
Y	3	STREET LIGHTING	SCHOOL WALK	IMMINGHAM	518532.66	414661.19	2002		56758	Urbis	Axia 16 LED 350mA	19 Watts	6.00 Metres	Galvanised Steel	
Y	4	STREET LIGHTING	SCHOOL WALK	IMMINGHAM	518562.15	414650.37	2013		56759	Urbis	Axia 16 LED 350mA	19 Watts	6.00 Metres	Galvanised Steel	
Y	5	STREET LIGHTING	SCHOOL WALK	IMMINGHAM	518607.34	414598.79	1997		56760	Urbis	Axia 16 LED 350mA	19 Watts	5.00 Metres	Galvanised Steel	
Y	6	STREET LIGHTING	SCHOOL WALK	IMMINGHAM	518639.59	414539.53	1998		56761	Urbis	Axia 16 LED 350mA	19 Watts	5.00 Metres	Galvanised Steel	
Y	7	STREET LIGHTING	SCHOOL WALK	IMMINGHAM	518664.68	414466.57	2014	31/03/2014	56762	Urbis	Axia 16 LED 350mA	19 Watts	6.00 Metres	Steel	
Y	8	STREET LIGHTING	SCHOOL WALK	IMMINGHAM	518700.53	414407.84	2014	31/03/2014	56763	Urbis	Axia 16 LED 350mA	19 Watts	6.00 Metres	Steel	
Y	1	STREET LIGHTING	ST ANDREWS LANE	IMMINGHAM	517607.63	415097.26	1992		57580	1 Urbis LED	Axia 16 LED 500mA	28 Watts	5.00 Metres	Galvanised Steel	
Y	2	STREET LIGHTING	ST ANDREWS LANE	IMMINGHAM	517599.4	415128.46	1992		57581	1 Urbis LED	Axia 16 LED 500mA	28 Watts	5.00 Metres	Galvanised Steel	
Y	3	STREET LIGHTING	ST ANDREWS LANE	IMMINGHAM	517569.91	415137.45	1992		57582	1 Urbis LED	Axia 16 LED 500mA	28 Watts	5.00 Metres	Galvanised Steel	
Y	4	STREET LIGHTING	ST ANDREWS LANE	IMMINGHAM	517546.36	415123.59	1992		57583	1 Urbis LED	Axia 16 LED 500mA	28 Watts	5.00 Metres	Galvanised Steel	
Y	5	STREET LIGHTING	ST ANDREWS LANE	IMMINGHAM	517513.45	415120.24	1992		57584	1 Urbis LED	Axia 16 LED 500mA	28 Watts	5.00 Metres	Galvanised Steel	
Y	1	STREET LIGHTING	WALTHAM HOUSE	IMMINGHAM	518119.66	414927.05	2008		59750	Urbis	Axia 8 LED 350mA	10 Watts	6.00 Metres	Galvanised Steel	
Y	1	STREET LIGHTING	FOOTPATH FROM WATERWORKS	IMMINGHAM	519026.58	415055.64	1965		59887	Urbis	Axia 8 LED 350mA	10 Watts	5.00 Metres	Galvanised Steel	
Y	2	STREET LIGHTING	FOOTPATH FROM WATERWORKS	IMMINGHAM	519052.66	415079.24	1965		59888	Urbis	Axia 8 LED 350mA	10 Watts	5.00 Metres	Galvanised Steel	
Y	1	STREET LIGHTING	WEELSBY HOUSE	IMMINGHAM	518117.27	414733.52	2006		59966	Urbis	Axia 16 LED 350mA	19 Watts	6.00 Metres	Stainless Steel	
Y	1	STREET LIGHTING	FOOTPATH FROM BUTT LANE TO	LACEBY	521352.73	406720.68	1987		48802	Urbis	Axia 16 LED 350mA	19 Watts	5.00 Metres	Galvanised Steel	
Y	2	STREET LIGHTING	FOOTPATH FROM BUTT LANE TO	LACEBY	521351.72	406759.26	1987		48803	Urbis	Axia 16 LED 350mA	19 Watts	5.00 Metres	Galvanised Steel	
Y	1	STREET LIGHTING	FOOTPATH FROM KEITH CRESCENT	LACEBY	521174.51	406391.77	1998		51512	Urbis	Axia 8 LED 350mA	10 Watts	5.00 Metres	Galvanised Steel	
Y	1	STREET LIGHTING	LACEBY BYPASS	LACEBY	520734.52	405887.23	2006		61671	1 Urbis LED	Teceo 48 LED 700mA	104 Watts	12.00 Metres	Galvanised Steel	
Y	1	STREET LIGHTING	LACEBY BYPASS	LACEBY	520734.52	405887.23	2006		62203	1 Urbis LED	Teceo 48 LED 700mA	104 Watts	12.00 Metres	Galvanised Steel	
Y	2	STREET LIGHTING	LACEBY BYPASS	LACEBY	520766.49	405907.42	2006		61672	1 Urbis LED	Teceo 48 LED 700mA	104 Watts	12.00 Metres	Galvanised Steel	
Y	2	STREET LIGHTING	LACEBY BYPASS	LACEBY	520766.49	405907.42	2006		62204	1 Urbis LED	Teceo 48 LED 700mA	104 Watts	12.00 Metres	Galvanised Steel	
Y	3	STREET LIGHTING	LACEBY BYPASS	LACEBY	520796.52	405930.03	2006		61673	1 Urbis LED	Teceo 48 LED 700mA	104 Watts	12.00 Metres	Galvanised Steel	
Y	3	STREET LIGHTING	LACEBY BYPASS	LACEBY	520796.52	405930.03	2006		62205	1 Urbis LED	Teceo 48 LED 700mA	104 Watts	12.00 Metres	Galvanised Steel	
Y	4	STREET LIGHTING	LACEBY BYPASS	LACEBY	520826.37	405951.43	2006		61674	1 Urbis LED	Teceo 48 LED 700mA	104 Watts	12.00 Metres	Galvanised Steel	
Y	4	STREET LIGHTING	LACEBY BYPASS	LACEBY	520826.37	405951.43	2006		62206	1 Urbis LED	Teceo 48 LED 700mA	104 Watts	12.00 Metres	Galvanised Steel	
Y	5	STREET LIGHTING	LACEBY BYPASS	LACEBY	520856.82	405972.76	2006		61675	1 Urbis LED	Teceo 48 LED 700mA	104 Watts	12.00 Metres	Galvanised Steel	
Y	5	STREET LIGHTING	LACEBY BYPASS	LACEBY	520856.82	405972.76	2006		62207	1 Urbis LED	Teceo 48 LED 700mA	104 Watts	12.00 Metres	Galvanised Steel	
Y	6	STREET LIGHTING	LACEBY BYPASS	LACEBY	520887.17	405993.06	2006		61676	1 Urbis LED	Teceo 48 LED 700mA	104 Watts	12.00 Metres	Galvanised Steel	
Y	6	STREET LIGHTING	LACEBY BYPASS	LACEBY	520887.17	405993.06	2006		62208	1 Urbis LED	Teceo 48 LED 700mA	104 Watts	12.00 Metres	Galvanised Steel	
Y	7	STREET LIGHTING	LACEBY BYPASS	LACEBY	520917.81	406014.82	2006		61677	1 Urbis LED	Teceo 48 LED 700mA	104 Watts	12.00 Metres	Galvanised Steel	
Y	7	STREET LIGHTING	LACEBY BYPASS	LACEBY	520917.81	406014.82	2006		62209	1 Urbis LED	Teceo 48 LED 700mA	104 Watts	12.00 Metres	Galvanised Steel	
Y	8	STREET LIGHTING	LACEBY BYPASS	LACEBY	520949.11	406035.39	2006		61678	1 Urbis LED	Teceo 48 LED 700mA	104 Watts	12.00 Metres	Galvanised Steel	
Y	8	STREET LIGHTING	LACEBY BYPASS	LACEBY	520949.11	406035.39	2006		62210	1 Urbis LED	Teceo 48 LED 700mA	104 Watts	12.00 Metres	Galvanised Steel	
Y	9	STREET LIGHTING	LACEBY BYPASS	LACEBY	520980.01	406054.71	2006		61679	1 Urbis LED	Teceo 48 LED 700mA	104 Watts	12.00 Metres	Galvanised Steel	
Y	9	STREET LIGHTING	LACEBY BYPASS	LACEBY	520980.01	406054.71	2006		62211	1 Urbis LED	Teceo 48 LED 700mA	104 Watts	12.00 Metres	Galvanised Steel	
Y	10	STREET LIGHTING	LACEBY BYPASS	LACEBY	521012.77	406073.36	2006		61680	1 Urbis LED	Teceo 48 LED 700mA	104 Watts	12.00 Metres	Galvanised Steel	
Y	10	STREET LIGHTING	LACEBY BYPASS	LACEBY	521012.77	406073.36	2006		62212	1 Urbis LED	Teceo 48 LED 700mA	104 Watts	12.00 Metres	Galvanised Steel	
Y	11	STREET LIGHTING	LACEBY BYPASS	LACEBY	521039.78	406088.9	2006		61681	1 Urbis LED	Teceo 48 LED 700mA	104 Watts	12.00 Metres	Galvanised Steel	
Y	11	STREET LIGHTING	LACEBY BYPASS	LACEBY	521039.78	406088.9	2006		62213	1 Urbis LED	Teceo 48 LED 700mA	104 Watts	12.00 Metres	Galvanised Steel	

Y	12	STREET LIGHTING	LACEBY BYPASS	LACEBY	521067.01	406103.98	2006		61682	1 Urbis LED	Teceo 48 LED 700mA	104 Watts	12.00 Metres	Galvanised Steel	
Y	12	STREET LIGHTING	LACEBY BYPASS	LACEBY	521067.01	406103.98	2006		62214	1 Urbis LED	Teceo 48 LED 700mA	104 Watts	12.00 Metres	Galvanised Steel	
Y	13	STREET LIGHTING	LACEBY BYPASS	LACEBY	521097.16	406117.42	2006		61683	1 Urbis LED	Teceo 48 LED 700mA	104 Watts	12.00 Metres	Galvanised Steel	
Y	13	STREET LIGHTING	LACEBY BYPASS	LACEBY	521097.16	406117.42	2006		62215	1 Urbis LED	Teceo 48 LED 700mA	104 Watts	12.00 Metres	Galvanised Steel	
Y	14	STREET LIGHTING	LACEBY BYPASS	LACEBY	521126.37	406132.01	2006		61684	1 Urbis LED	Teceo 48 LED 700mA	104 Watts	12.00 Metres	Galvanised Steel	
Y	14	STREET LIGHTING	LACEBY BYPASS	LACEBY	521126.37	406132.01	2006		62216	1 Urbis LED	Teceo 48 LED 700mA	104 Watts	12.00 Metres	Galvanised Steel	
Y	15	STREET LIGHTING	LACEBY BYPASS	LACEBY	521157.57	406147.36	2006		61685	1 Urbis LED	Teceo 48 LED 700mA	104 Watts	12.00 Metres	Galvanised Steel	
Y	15	STREET LIGHTING	LACEBY BYPASS	LACEBY	521157.57	406147.36	2006		62217	1 Urbis LED	Teceo 48 LED 700mA	104 Watts	12.00 Metres	Galvanised Steel	
Y	16	STREET LIGHTING	LACEBY BYPASS	LACEBY	521183.72	406159.02	2006		61686	1 Urbis LED	Teceo 48 LED 700mA	104 Watts	12.00 Metres	Galvanised Steel	
Y	16	STREET LIGHTING	LACEBY BYPASS	LACEBY	521183.72	406159.02	2006		62218	1 Urbis LED	Teceo 48 LED 700mA	104 Watts	12.00 Metres	Galvanised Steel	
Y	17	STREET LIGHTING	LACEBY BYPASS	LACEBY	521208.91	406169.78	2006		61687	1 Urbis LED	Teceo 48 LED 700mA	104 Watts	12.00 Metres	Galvanised Steel	
Y	17	STREET LIGHTING	LACEBY BYPASS	LACEBY	521208.91	406169.78	2006		62219	1 Urbis LED	Teceo 48 LED 700mA	104 Watts	12.00 Metres	Galvanised Steel	
Y	18	STREET LIGHTING	LACEBY BYPASS	LACEBY	521235.23	406180.26	2006		61688	1 Urbis LED	Teceo 48 LED 700mA	104 Watts	12.00 Metres	Galvanised Steel	
Y	18	STREET LIGHTING	LACEBY BYPASS	LACEBY	521235.23	406180.26	2006		62220	1 Urbis LED	Teceo 48 LED 700mA	104 Watts	12.00 Metres	Galvanised Steel	
Y	19	STREET LIGHTING	LACEBY BYPASS	LACEBY	521260.59	406189.46	2006		61689	1 Urbis LED	Teceo 48 LED 700mA	104 Watts	12.00 Metres	Galvanised Steel	
Y	19	STREET LIGHTING	LACEBY BYPASS	LACEBY	521260.59	406189.46	2006		62221	1 Urbis LED	Teceo 48 LED 700mA	104 Watts	12.00 Metres	Galvanised Steel	
Y	20	STREET LIGHTING	LACEBY BYPASS	LACEBY	521295.12	406204.58	2006		61690	1 Urbis LED	Teceo 48 LED 700mA	104 Watts	12.00 Metres	Galvanised Steel	
Y	20	STREET LIGHTING	LACEBY BYPASS	LACEBY	521295.12	406204.58	2006		62222	1 Urbis LED	Teceo 48 LED 700mA	104 Watts	12.00 Metres	Galvanised Steel	
Y	21	STREET LIGHTING	LACEBY BYPASS	LACEBY	521331.01	406218.29	2006		61691	1 Urbis LED	Teceo 48 LED 700mA	104 Watts	12.00 Metres	Galvanised Steel	
Y	21	STREET LIGHTING	LACEBY BYPASS	LACEBY	521331.01	406218.29	2006		62223	1 Urbis LED	Teceo 48 LED 700mA	104 Watts	12.00 Metres	Galvanised Steel	
Y	22	STREET LIGHTING	LACEBY BYPASS	LACEBY	521366.77	406231.91	2006		61692	1 Urbis LED	Teceo 48 LED 700mA	104 Watts	12.00 Metres	Galvanised Steel	
Y	22	STREET LIGHTING	LACEBY BYPASS	LACEBY	521366.77	406231.91	2006		62224	1 Urbis LED	Teceo 48 LED 700mA	104 Watts	12.00 Metres	Galvanised Steel	
Y	23	STREET LIGHTING	LACEBY BYPASS	LACEBY	521402.39	406245.81	2006		61693	1 Urbis LED	Teceo 48 LED 700mA	104 Watts	12.00 Metres	Galvanised Steel	
Y	23	STREET LIGHTING	LACEBY BYPASS	LACEBY	521402.39	406245.81	2006		62225	1 Urbis LED	Teceo 48 LED 700mA	104 Watts	12.00 Metres	Galvanised Steel	
Y	24	STREET LIGHTING	LACEBY BYPASS	LACEBY	521437.27	406259.64	2006		61694	1 Urbis LED	Teceo 48 LED 700mA	104 Watts	12.00 Metres	Galvanised Steel	
Y	24	STREET LIGHTING	LACEBY BYPASS	LACEBY	521437.27	406259.64	2006		62226	1 Urbis LED	Teceo 48 LED 700mA	104 Watts	12.00 Metres	Galvanised Steel	
Y	25	STREET LIGHTING	LACEBY BYPASS	LACEBY	521472.83	406274.05	2006		61695	1 Urbis LED	Teceo 48 LED 700mA	104 Watts	12.00 Metres	Galvanised Steel	
Y	25	STREET LIGHTING	LACEBY BYPASS	LACEBY	521472.83	406274.05	2006		62227	1 Urbis LED	Teceo 48 LED 700mA	104 Watts	12.00 Metres	Galvanised Steel	
Y	26	STREET LIGHTING	LACEBY BYPASS	LACEBY	521508.51	406287.62	2006		61696	1 Urbis LED	Teceo 48 LED 700mA	104 Watts	12.00 Metres	Galvanised Steel	
Y	26	STREET LIGHTING	LACEBY BYPASS	LACEBY	521508.51	406287.62	2006		62228	1 Urbis LED	Teceo 48 LED 700mA	104 Watts	12.00 Metres	Galvanised Steel	
Y	27	STREET LIGHTING	LACEBY BYPASS	LACEBY	521543.77	406301.59	2006		61697	1 Urbis LED	Teceo 48 LED 700mA	104 Watts	12.00 Metres	Galvanised Steel	
Y	27	STREET LIGHTING	LACEBY BYPASS	LACEBY	521543.77	406301.59	2006		62229	1 Urbis LED	Teceo 48 LED 700mA	104 Watts	12.00 Metres	Galvanised Steel	
Y	28	STREET LIGHTING	LACEBY BYPASS	LACEBY	521579.15	406315.08	2006		61698	1 Urbis LED	Teceo 48 LED 700mA	104 Watts	12.00 Metres	Galvanised Steel	
Y	28	STREET LIGHTING	LACEBY BYPASS	LACEBY	521579.15	406315.08	2006		62230	1 Urbis LED	Teceo 48 LED 700mA	104 Watts	12.00 Metres	Galvanised Steel	
Y	29	STREET LIGHTING	LACEBY BYPASS	LACEBY	521614.17	406329.14	2006		61699	1 Urbis LED	Teceo 48 LED 700mA	104 Watts	12.00 Metres	Galvanised Steel	
Y	29	STREET LIGHTING	LACEBY BYPASS	LACEBY	521614.17	406329.14	2006		62231	1 Urbis LED	Teceo 48 LED 700mA	104 Watts	12.00 Metres	Galvanised Steel	
Y	30	STREET LIGHTING	LACEBY BYPASS	LACEBY	521649.86	406343.88	2006		61700	1 Urbis LED	Teceo 48 LED 700mA	104 Watts	12.00 Metres	Galvanised Steel	
Y	30	STREET LIGHTING	LACEBY BYPASS	LACEBY	521649.86	406343.88	2006		62232	1 Urbis LED	Teceo 48 LED 700mA	104 Watts	12.00 Metres	Galvanised Steel	
Y	31	STREET LIGHTING	LACEBY BYPASS	LACEBY	521684.81	406356.63	2006		61701	Urbis		104 Watts	12.00 Metres	Galvanised Steel	
Y	31	STREET LIGHTING	LACEBY BYPASS	LACEBY	521684.81	406356.63	2006		62233	1 Urbis LED	Teceo 48 LED 700mA	104 Watts	12.00 Metres	Galvanised Steel	
Y	32	STREET LIGHTING	LACEBY BYPASS	LACEBY	521721.93	406372.78	2006		61702	1 Urbis LED	Teceo 48 LED 700mA	104 Watts	12.00 Metres	Galvanised Steel	
Y	32	STREET LIGHTING	LACEBY BYPASS	LACEBY	521721.93	406372.78	2006		62234	1 Urbis LED	Teceo 48 LED 700mA	104 Watts	12.00 Metres	Galvanised Steel	
Y	33	STREET LIGHTING	LACEBY BYPASS	LACEBY	521757.51	406385.13	2006		61703	1 Urbis LED	Teceo 48 LED 700mA	104 Watts	12.00 Metres	Galvanised Steel	
Y	33	STREET LIGHTING	LACEBY BYPASS	LACEBY	521757.51	406385.13	2006		62235	1 Urbis LED	Teceo 48 LED 700mA	104 Watts	12.00 Metres	Galvanised Steel	
Y	34	STREET LIGHTING	LACEBY BYPASS	LACEBY	521791.88	406398.78	2006		61704	1 Urbis LED	Teceo 48 LED 700mA	104 Watts	12.00 Metres	Galvanised Steel	
Y	34	STREET LIGHTING	LACEBY BYPASS	LACEBY	521791.88	406398.78	2006		62236	1 Urbis LED	Teceo 48 LED 700mA	104 Watts	12.00 Metres	Galvanised Steel	
Y	35	STREET LIGHTING	LACEBY BYPASS	LACEBY	521825.75	406411.62	2006		61705	1 Urbis LED	Teceo 48 LED 700mA	104 Watts	12.00 Metres	Galvanised Steel	
Y	35	STREET LIGHTING	LACEBY BYPASS	LACEBY	521825.75	406411.62	2006		62237	1 Urbis LED	Teceo 48 LED 700mA	104 Watts	12.00 Metres	Galvanised Steel	
Y	36	STREET LIGHTING	LACEBY BYPASS	LACEBY	521861.39	406425.46	2006		61706	1 Urbis LED	Teceo 48 LED 700mA	104 Watts	12.00 Metres	Galvanised Steel	
Y	36	STREET LIGHTING	LACEBY BYPASS	LACEBY	521861.39	406425.46	2006		62238	1 Urbis LED	Teceo 48 LED 700mA	104 Watts	12.00 Metres	Galvanised Steel	
Y	37	STREET LIGHTING	LACEBY BYPASS	LACEBY	521895.29	406440.49	2009		61707	1 Urbis LED	Teceo 48 LED 700mA	104 Watts	12.00 Metres	Galvanised Steel	
Y	37	STREET LIGHTING	LACEBY BYPASS	LACEBY	521895.29	406440.49	2009		62239	1 Urbis LED	Teceo 48 LED 700mA	104 Watts	12.00 Metres	Galvanised Steel	
Y	38	STREET LIGHTING	LACEBY BYPASS	LACEBY	521943.55	406459.31	2006		61708	1 Urbis LED	Teceo 48 LED 700mA	104 Watts	12.00 Metres	Galvanised Steel	
Y	38	STREET LIGHTING	LACEBY BYPASS	LACEBY	521943.55	406459.31	2006		62240	1 Urbis LED	Teceo 48 LED 700mA	104 Watts	12.00 Metres	Galvanised Steel	
Y	39	STREET LIGHTING	LACEBY BYPASS	LACEBY	521963.48	406467.45	2006		61709	1 Urbis LED	Teceo 48 LED 700mA	104 Watts	12.00 Metres	Galvanised Steel	
Y	39	STREET LIGHTING	LACEBY BYPASS	LACEBY	521963.48	406467.45	2006		62241	1 Urbis LED	Teceo 48 LED 700mA	104 Watts	12.00 Metres	Galvanised Steel	
Y	40	STREET LIGHTING	LACEBY BYPASS	LACEBY	521992.01	406479.35	2006		61710	1 Urbis LED	Teceo 48 LED 700mA	104 Watts	12.00 Metres	Galvanised Steel	
Y	40	STREET LIGHTING	LACEBY BYPASS	LACEBY	521992.01	406479.35	2006		62242	1 Urbis LED	Teceo 48 LED 700mA	104 Watts	12.00 Metres	Galvanised Steel	
Y	41	STREET LIGHTING	LACEBY BYPASS	LACEBY	522020.52	406491.8	2006		61711	1 Urbis LED	Teceo 48 LED 700mA	104 Watts	12.00 Metres	Galvanised Steel	
Y	41	STREET LIGHTING	LACEBY BYPASS	LACEBY	522020.52	406491.8	2006		62243	1 Urbis LED	Teceo 48 LED 700mA	104 Watts	12.00 Metres	Galvanised Steel	
Y	42	STREET LIGHTING	LACEBY BYPASS	LACEBY	522049.15	406504.38	2006		61712	1 Urbis LED	Teceo 48 LED 700mA	104 Watts	12.00 Metres	Galvanised Steel	
Y	42	STREET LIGHTING	LACEBY BYPASS	LACEBY	522049.15	406504.38	2006		62244	1 Urbis LED	Teceo 48 LED 700mA	104 Watts	12.00 Metres	Galvanised Steel	
Y	43	STREET LIGHTING	LACEBY BYPASS	LACEBY	522084.52	406520.2	2006		61713	1 Urbis LED	Teceo 48 LED 700mA	104 Watts	12.00 Metres	Galvanised Steel	
Y	43	STREET LIGHTING	LACEBY BYPASS	LACEBY	522084.52	406520.2	2006		62245	1 Urbis LED	Teceo 48 LED 700mA	104 Watts	12.00 Metres	Galvanised Steel	
Y	44	STREET LIGHTING	LACEBY BYPASS	LACEBY	522109.14	406532.48	2006		61714	1 Urbis LED	Teceo 48 LED 700mA	104 Watts	12.00 Metres	Galvanised Steel	
Y	44	STREET LIGHTING	LACEBY BYPASS	LACEBY	522109.14	406532.48	2006		62246	1 Urbis LED	Teceo 48 LED 700mA	104 Watts	12.00 Metres	Galvanised Steel	
Y	45	STREET LIGHTING	LACEBY BYPASS	LACEBY	522126.38	406541.23	2006		61715	1 Urbis LED	Teceo 48 LED 700mA	104 Watts	12.00 Metres	Galvanised Steel	
Y	45	STREET LIGHTING	LACEBY BYPASS	LACEBY	522126.38	406541.23	2006		62247	1 Urbis LED	Teceo 48 LED 700mA	104 Watts	12.00 Metres	Galvanised Steel	
Y	46	STREET LIGHTING	LACEBY BYPASS	LACEBY	522145.8	406551.15	2006		61716	1 Urbis LED	Teceo 48 LED 700mA	104 Watts	12.00 Metres	Galvanised Steel	
Y	46	STREET LIGHTING	LACEBY BYPASS	LACEBY	522145.8	406551.15	2006		62248	1 Urbis LED	Teceo 48 LED 700mA	104 Watts	12.00 Metres	Galvanised Steel	
Y	47	STREET LIGHTING	LACEBY BYPASS	LACEBY	522174.11	406565.59	2006		61717	1 Urbis LED	Teceo 48 LED 700mA	104 Watts	12.00 Metres	Galvanised Steel	
Y	47	STREET LIGHTING	LACEBY BYPASS	LACEBY	522174.11	406565.59	2006		62249	1 Urbis LED	Teceo 48 LED 700mA	104 Watts	12.00 Metres	Galvanised Steel	
Y	48	STREET LIGHTING	LACEBY BYPASS	LACEBY	522203.17	406581.05	2006		61718	1 Urbis LED	Teceo 48 LED 700mA	104 Watts	12.00 Metres	Galvanised Steel	
Y	48	STREET LIGHTING	LACEBY BYPASS	LACEBY	522203.17	406581.05	2006		62250	1 Urbis LED	Teceo 48 LED 700mA	104 Watts	12.00 Metres	Galvanised Steel	
Y	49	STREET LIGHTING	LACEBY BYPASS	LACEBY	522230	406597.16	2006		61719	1 Urbis LED	Teceo 48 LED 700mA	104 Watts	12.00 Metres	Galvanised Steel	
Y	49	STREET LIGHTING	LACEBY BYPASS	LACEBY	522230	406597.16	2006		62251	1 Urbis LED	Teceo 48 LED 700mA	104 Watts	12.00 Metres	Galvanised Steel	
Y	50	STREET LIGHTING	LACEBY BYPASS	LACEBY	522262.13	406615.1	2008		61720	1 Urbis LED	Teceo 48 LED 700mA	104 Watts	12.00 Metres	Galvanised Steel	
Y	50	STREET LIGHTING	LACEBY BYPASS	LACEBY	522262.13	406615.1	2008		62252	1 Urbis LED	Teceo 48 LED 700mA	104 Watts	12.00 Metres	Galvanised Steel	
Y	51	STREET LIGHTING	LACEBY BYPASS	LACEBY	522293.78	406635	2006		61721	1 Urbis LED	Teceo 48 LED 700mA	104 Watts	12.00 Metres	Galvanised Steel	
Y	51	STREET LIGHTING	LACEBY BYPASS	LACEBY	522293.78	406635	2006		62253	1 Urbis LED	Teceo 48 LED 700mA	104 Watts	12.00 Metres	Galvanised Steel	
Y	52	STREET LIGHTING	LACEBY BYPASS	LACEBY	522324.8	406653.62	2006		61722	1 Urbis LED	Teceo 48 LED 700mA	104 Watts	12.00 Metres	Galvanised Steel	
Y	52	STREET LIGHTING	LACEBY BYPASS	LACEBY	522324.8	406653.62	2006		62254	1 Urbis LED	Teceo 48 LED 700mA	104 Watts	12.00 Metres	Galvanised Steel	
Y	53	STREET LIGHTING	LACEBY BYPASS	LACEBY	522355.66	406672.84	2006		61723	1 Urbis LED	Teceo 48 LED 700mA	104 Watts	12.00 Metres	Galvanised Steel	
Y	53	STREET LIGHTING	LACEBY BYPASS	LACEBY	522355.66	406672.84	2006		62255	1 Urbis LED	Teceo 48 LED 700mA	104 Watts	12.00 Metres	Galvanised Steel	
Y	54	STREET LIGHTING	LACEBY BYPASS	LACEBY	522386.33	406693.6	2006		61724	1 Urbis LED	Teceo 48 LED 700mA	104 Watts	12.00 Metres	Galvanised Steel	
Y	54	STREET LIGHTING	LACEBY BYPASS	LACEBY	522386.33	406693.6	2006		62256	1 Urbis LED	Teceo 48 LED 700mA	104 Watts	12.00 Metres	Galvanised Steel	
Y	55	STREET LIGHTING	LACEBY BYPASS	LACEBY	522416.79	406713.85	2006		61725	1 Urbis LED	Teceo 48 LED 700mA	104 Watts	12.00 Metres	Galvanised Steel	
Y	55	STREET LIGHTING	LACEBY BYPASS	LACEBY	522416.79	406713.85	2006		62257	1 Urbis LED	Teceo 48 LED 700mA	104 Watts	12.00 Metres	Galvanised Steel	
Y	56	STREET LIGHTING	LACEBY BYPASS	LACEBY	522447.08	406733.93	2006		61726	1 Urbis LED	Teceo 48 LED 700mA	104 Watts	12.00 Metres	Galvanised Steel	
Y	56	STREET LIGHTING	LACEBY BYPASS	LACEBY	522447.08	406733.93	2006		62258	1 Urbis LED	Teceo 48 LED 700mA	104 Watts	12.00 Metres	Galvanised Steel	
Y	57	STREET LIGHTING	LACEBY BYPASS	LACEBY	522477.69	406753.96	2006		61727	1 Urbis LED	Teceo 48 LED 700mA	104 Watts	12.00 Metres	Galvanised Steel	
Y	57	STREET LIGHTING	LACEBY BYPASS	LACEBY	522477.69	406753.96	2006		62259	1 Urbis LED	Teceo 48 LED 700mA	104 Watts	12.00 Metres	Galvanised Steel	
Y	58	STREET LIGHTING	LACEBY BYPASS	LACEBY	522508.09	406774.18	2006		61728	1 Urbis LED	Teceo 48 LED 700mA	104 Watts	12.00 Metres	Galvanised Steel	
Y	58	STREET LIGHTING	LACEBY BYPASS	LACEBY	522508.09	406774.18	2006		62260	1 Urbis LED	Teceo 48 LED 700mA	104 Watts	12.00 Metres	Galvanised Steel	
Y	59	STREET LIGHTING	LACEBY BYPASS	LACEBY	522538.58	406794.58	2006		61729	1 Urbis LED	Teceo 48 LED 700mA	104 Watts	12.00 Metres	Galvanised Steel	
Y	59	STREET LIGHTING	LACEBY BYPASS	LACEBY	522538.58	406794.58	2006		62261	1 Urbis LED	Teceo 48 LED 700mA	104 Watts	12.00 Metres	Galvanised Steel	
Y	60	STREET LIGHTING	LACEBY BYPASS	LACEBY	522569.99	406814.9	2006		61730	1 Urbis LED	Teceo 48 LED 700mA	104 Watts	12.00 Metres	Galvanised Steel	
Y	60	STREET LIGHTING	LACEBY BYPASS	LACEBY	522569.99	406814.9	2006		62262	1 Urbis LED	Teceo 48 LED 700mA	104 Watts	12.00 Metres	Galvanised Steel	
Y	61	STREET LIGHTING	LACEBY BYPASS	LACEBY	522600.26	406834.85	2006		61731	1 Urbis LED	Teceo 48 LED 700mA	104 Watts	12.00 Metres	Galvanised Steel	
Y	61	STREET LIGHTING	LACEBY BYPASS	LACEBY	522600.26	406834.85	2006		62263	1 Urbis LED	Teceo 48 LED 700mA	104 Watts	12.00 Metres	Galvanised Steel	
Y	62	STREET LIGHTING	LACEBY BYPASS	LACEBY	522630.34	406855.53	2006		61732	1 Urbis LED	Teceo 48 LED 700mA	104 Watts	12.00 Metres	Galvanised Steel	
Y	62	STREET LIGHTING	LACEBY BYPASS	LACEBY	522630.34	406855.53	2006		62264	1 Urbis LED	Teceo 48 LED 700mA	104 Watts	12.00 Metres	Galvanised Steel	
Y	63	STREET LIGHTING	LACEBY BYPASS	LACEBY	522660.58	406875.59	2006		61733	1 Urbis LED	Teceo 48 LED 700mA	104 Watts	12.00 Metres	Galvanised Steel	
Y	63	STREET LIGHTING	LACEBY BYPASS	LACEBY	522660.58	406875.59	2006		62265	1 Urbis LED	Teceo 48 LED 700mA	104 Watts	12.00 Metres	Galvanised Steel	
Y	64	STREET LIGHTING	LACEBY BYPASS	LACEBY	522691.03	406896.25	2006		61734	1 Urbis LED	Teceo 48 LED 700mA	104 Watts	12.00 Metres	Galvanised Steel	
Y	64	STREET LIGHTING	LACEBY BYPASS	LACEBY	522691.03	406896.25	2006		62266	1 Urbis LED	Teceo 48 LED 700mA	104 Watts	12.00 Metres	Galvanised Steel	
Y	65	STREET LIGHTING	LACEBY BYPASS	LACEBY	522721.73	406917.94	2006		61735	1 Urbis LED	Teceo 48 LED 700mA	104 Watts	12.00 Metres	Galvanised Steel	
Y	65	STREET LIGHTING	LACEBY BYPASS	LACEBY	522721.73	406917.94	2006		62267	1 Urbis LED	Teceo 48 LED 700mA	104 Watts	12.00 Metres	Galvanised Steel	
Y	66	STREET LIGHTING	LACEBY BYPASS	LACEBY	522750.94	406939.26	2006		61736	1 Urbis LED	Teceo 48 LED 700mA	104 Watts	12.00 Metres	Galvanised Steel	
Y	66	STREET LIGHTING	LACEBY BYPASS	LACEBY	522750.94	406939.26	2006		62268	1 Urbis LED	Teceo 48 LED 700mA	104 Watts	12.00 Metres	Galvanised Steel	

Y	67	STREET LIGHTING	LACEBY BYPASS	LACEBY	522779.08	406962.11	2006		61737	1 Urbis LED	Teceo 48 LED 700mA	104 Watts	12.00 Metres	Galvanised Steel	
Y	67	STREET LIGHTING	LACEBY BYPASS	LACEBY	522779.08	406962.11	2006		62269	1 Urbis LED	Teceo 48 LED 700mA	104 Watts	12.00 Metres	Galvanised Steel	
Y	68	STREET LIGHTING	LACEBY BYPASS	LACEBY	522808.03	406985.56	2006		61738	1 Urbis LED	Teceo 48 LED 700mA	104 Watts	12.00 Metres	Galvanised Steel	
Y	68	STREET LIGHTING	LACEBY BYPASS	LACEBY	522808.03	406985.56	2006		62270	1 Urbis LED	Teceo 48 LED 700mA	104 Watts	12.00 Metres	Galvanised Steel	
Y	69	STREET LIGHTING	LACEBY BYPASS	LACEBY	522835.88	407010.09	2006		61739	Urbis		104 Watts	12.00 Metres	Galvanised Steel	
Y	69	STREET LIGHTING	LACEBY BYPASS	LACEBY	522835.88	407010.09	2006		62271	1 Urbis LED	Teceo 48 LED 700mA	104 Watts	12.00 Metres	Galvanised Steel	
Y	70	STREET LIGHTING	LACEBY BYPASS	LACEBY	522863.77	407034.18	2006		61740	1 Urbis LED	Teceo 48 LED 700mA	104 Watts	12.00 Metres	Galvanised Steel	
Y	70	STREET LIGHTING	LACEBY BYPASS	LACEBY	522863.77	407034.18	2006		62272	1 Urbis LED	Teceo 48 LED 700mA	104 Watts	12.00 Metres	Galvanised Steel	
Y	71	STREET LIGHTING	LACEBY BYPASS	LACEBY	522890.99	407059.37	2006		61741	1 Urbis LED	Teceo 48 LED 700mA	104 Watts	12.00 Metres	Galvanised Steel	
Y	71	STREET LIGHTING	LACEBY BYPASS	LACEBY	522890.99	407059.37	2006		62273	1 Urbis LED	Teceo 48 LED 700mA	104 Watts	12.00 Metres	Galvanised Steel	
Y	72	STREET LIGHTING	LACEBY BYPASS	LACEBY	522918.87	407086.04	2006		61742	1 Urbis LED	Teceo 48 LED 700mA	104 Watts	12.00 Metres	Galvanised Steel	
Y	72	STREET LIGHTING	LACEBY BYPASS	LACEBY	522918.87	407086.04	2006		62274	1 Urbis LED	Teceo 48 LED 700mA	104 Watts	12.00 Metres	Galvanised Steel	
Y	73	STREET LIGHTING	LACEBY BYPASS	LACEBY	522944.86	407112.86	2006		61743	1 Urbis LED	Teceo 48 LED 700mA	104 Watts	12.00 Metres	Galvanised Steel	
Y	73	STREET LIGHTING	LACEBY BYPASS	LACEBY	522944.86	407112.86	2006		62275	1 Urbis LED	Teceo 48 LED 700mA	104 Watts	12.00 Metres	Galvanised Steel	
Y	74	STREET LIGHTING	LACEBY BYPASS	LACEBY	522971.31	407141.26	2006		61744	1 Urbis LED	Teceo 48 LED 700mA	104 Watts	12.00 Metres	Galvanised Steel	
Y	74	STREET LIGHTING	LACEBY BYPASS	LACEBY	522971.31	407141.26	2006		62276	Urbis		104 Watts	12.00 Metres	Galvanised Steel	
Y	75	STREET LIGHTING	LACEBY BYPASS	LACEBY	522997.48	407169.92	2006		61745	1 Urbis LED	Teceo 48 LED 700mA	104 Watts	12.00 Metres	Galvanised Steel	
Y	75	STREET LIGHTING	LACEBY BYPASS	LACEBY	522997.48	407169.92	2006		62277	1 Urbis LED	Teceo 48 LED 700mA	104 Watts	12.00 Metres	Galvanised Steel	
Y	76	STREET LIGHTING	LACEBY BYPASS	LACEBY	523022.51	407194.08	2006		61746	1 Urbis LED	Teceo 48 LED 700mA	104 Watts	12.00 Metres	Galvanised Steel	
Y	76	STREET LIGHTING	LACEBY BYPASS	LACEBY	523022.51	407194.08	2006		62278	1 Urbis LED	Teceo 48 LED 700mA	104 Watts	12.00 Metres	Galvanised Steel	
Y	77	STREET LIGHTING	LACEBY BYPASS	LACEBY	523047.74	407226.91	2006		61747	1 Urbis LED	Teceo 48 LED 700mA	104 Watts	12.00 Metres	Galvanised Steel	
Y	77	STREET LIGHTING	LACEBY BYPASS	LACEBY	523047.74	407226.91	2006		62279	1 Urbis LED	Teceo 48 LED 700mA	104 Watts	12.00 Metres	Galvanised Steel	
Y	78	STREET LIGHTING	LACEBY BYPASS	LACEBY	523073.13	407254.31	2006		61748	1 Urbis LED	Teceo 48 LED 700mA	104 Watts	12.00 Metres	Galvanised Steel	
Y	78	STREET LIGHTING	LACEBY BYPASS	LACEBY	523073.13	407254.31	2006		62280	1 Urbis LED	Teceo 48 LED 700mA	104 Watts	12.00 Metres	Galvanised Steel	
Y	79	STREET LIGHTING	LACEBY BYPASS	LACEBY	523099.25	407283.24	2006		61749	1 Urbis LED	Teceo 48 LED 700mA	104 Watts	12.00 Metres	Galvanised Steel	
Y	79	STREET LIGHTING	LACEBY BYPASS	LACEBY	523099.25	407283.24	2006		62281	1 Urbis LED	Teceo 48 LED 700mA	104 Watts	12.00 Metres	Galvanised Steel	
Y	80	STREET LIGHTING	LACEBY BYPASS	LACEBY	523126.96	407310.96	2006		61750	1 Urbis LED	Teceo 48 LED 700mA	104 Watts	12.00 Metres	Galvanised Steel	
Y	80	STREET LIGHTING	LACEBY BYPASS	LACEBY	523126.96	407310.96	2006		62282	1 Urbis LED	Teceo 48 LED 700mA	104 Watts	12.00 Metres	Galvanised Steel	
Y	81	STREET LIGHTING	LACEBY BYPASS	LACEBY	523154.45	407335.82	2006		61751	1 Urbis LED	Teceo 48 LED 700mA	104 Watts	12.00 Metres	Galvanised Steel	
Y	81	STREET LIGHTING	LACEBY BYPASS	LACEBY	523154.45	407335.82	2006		62283	1 Urbis LED	Teceo 48 LED 700mA	104 Watts	12.00 Metres	Galvanised Steel	
Y	82	STREET LIGHTING	LACEBY BYPASS	LACEBY	523185.6	407359.91	2006		61752	1 Urbis LED	Teceo 48 LED 700mA	104 Watts	12.00 Metres	Galvanised Steel	
Y	82	STREET LIGHTING	LACEBY BYPASS	LACEBY	523185.6	407359.91	2006		62284	1 Urbis LED	Teceo 48 LED 700mA	104 Watts	12.00 Metres	Galvanised Steel	
Y	83	STREET LIGHTING	LACEBY BYPASS	LACEBY	523219.39	407383.81	2006		61753	1 Urbis LED	Teceo 48 LED 700mA	104 Watts	12.00 Metres	Galvanised Steel	
Y	83	STREET LIGHTING	LACEBY BYPASS	LACEBY	523219.39	407383.81	2006		62285	1 Urbis LED	Teceo 48 LED 700mA	104 Watts	12.00 Metres	Galvanised Steel	
Y	84	STREET LIGHTING	LACEBY BYPASS	LACEBY	523252.58	407402.85	2006		61754	Urbis	Teceo 48 LED 700mA	104 Watts	12.00 Metres	Galvanised Steel	
Y	84	STREET LIGHTING	LACEBY BYPASS	LACEBY	523252.58	407402.85	2006		62286	1 Urbis LED	Teceo 48 LED 700mA	104 Watts	12.00 Metres	Galvanised Steel	
Y	85	STREET LIGHTING	LACEBY BYPASS	LACEBY	523283.27	407422.66	2006		61755	1 Urbis LED	Teceo 48 LED 700mA	104 Watts	12.00 Metres	Galvanised Steel	
Y	85	STREET LIGHTING	LACEBY BYPASS	LACEBY	523283.27	407422.66	2006		62287	1 Urbis LED	Teceo 48 LED 700mA	104 Watts	12.00 Metres	Galvanised Steel	
Y	1	STREET LIGHTING	LACEBY ROUNDABOUT	GRIMSBY	524343.65	407649.11	1975		66336	1 Urbis LED	Teceo 48 LED 500mA	79 Watts	18.00 Metres	Galvanised Steel	
Y	1	STREET LIGHTING	LACEBY ROUNDABOUT (A18)	LACEBY	520651.85	405914.57	2006		52058	1 Urbis LED	Teceo 48 LED 700mA	104 Watts	12.00 Metres	Galvanised Steel	
Y	2	STREET LIGHTING	LACEBY ROUNDABOUT (A18)	LACEBY	520635.88	405898.29	2006		52059	1 Urbis LED	Teceo 48 LED 700mA	104 Watts	12.00 Metres	Galvanised Steel	
Y	3	STREET LIGHTING	LACEBY ROUNDABOUT (A18)	LACEBY	520673.53	405896.28	2006		52060	1 Urbis LED	Teceo 48 LED 700mA	104 Watts	12.00 Metres	Galvanised Steel	
Y	4	STREET LIGHTING	LACEBY ROUNDABOUT (A18)	LACEBY	520656.28	405881.34	2006		52061	1 Urbis LED	Teceo 48 LED 700mA	104 Watts	12.00 Metres	Galvanised Steel	
Y	5	STREET LIGHTING	LACEBY ROUNDABOUT (A18)	LACEBY	520672.28	405881.49	2006		52062	1 Urbis LED	Teceo 48 LED 700mA	104 Watts	12.00 Metres	Galvanised Steel	
Y	6	STREET LIGHTING	LACEBY ROUNDABOUT (A18)	LACEBY	520697.9	405891.27	2006		52063	1 Urbis LED	Teceo 48 LED 700mA	104 Watts	12.00 Metres	Galvanised Steel	
Y	7	STREET LIGHTING	LACEBY ROUNDABOUT (A18)	LACEBY	520723.36	405877.62	2006		52064	1 Urbis LED	Teceo 48 LED 700mA	104 Watts	12.00 Metres	Galvanised Steel	
Y	8	STREET LIGHTING	LACEBY ROUNDABOUT (A18)	LACEBY	520729.52	405852.62	2006		52065	1 Urbis LED	Teceo 48 LED 700mA	104 Watts	12.00 Metres	Galvanised Steel	
Y	9	STREET LIGHTING	LACEBY ROUNDABOUT (A18)	LACEBY					69367	Urbis	Teceo 48 LED 700mA	104 Watts			
Y	10	STREET LIGHTING	LACEBY ROUNDABOUT (A18)	LACEBY	520735.71	405829.92	2006		52067	1 Urbis LED	Teceo 48 LED 700mA	104 Watts	12.00 Metres	Galvanised Steel	
Y	11	STREET LIGHTING	LACEBY ROUNDABOUT (A18)	LACEBY	520755.83	405807.28	2006		52068	1 Urbis LED	Teceo 48 LED 700mA	104 Watts	12.00 Metres	Galvanised Steel	
Y	12	STREET LIGHTING	LACEBY ROUNDABOUT (A18)	LACEBY	520722.86	405817.41	2006		52069	1 Urbis LED	Teceo 48 LED 700mA	104 Watts	12.00 Metres	Galvanised Steel	
Y	13	STREET LIGHTING	LACEBY ROUNDABOUT (A18)	LACEBY	520684.47	405825.36	2006		52070	1 Urbis LED	Teceo 48 LED 700mA	104 Watts	12.00 Metres	Galvanised Steel	
Y	14	STREET LIGHTING	LACEBY ROUNDABOUT (A18)	LACEBY				15/01/2025	70173	Urbis	Teceo 48 LED 700mA	104 Watts			
Y	15	STREET LIGHTING	LACEBY ROUNDABOUT (A18)	LACEBY	520654.51	405830.17	2006		52072	1 Urbis LED	Teceo 48 LED 700mA	104 Watts	12.00 Metres	Galvanised Steel	
Y	16	STREET LIGHTING	LACEBY ROUNDABOUT (A18)	LACEBY	520627.41	405827.58	2006		52073	1 Urbis LED	Teceo 48 LED 700mA	104 Watts	12.00 Metres	Galvanised Steel	
Y	17	STREET LIGHTING	LACEBY ROUNDABOUT (A18)	LACEBY	520640.01	405844.37	2006		52074	1 Urbis LED	Teceo 48 LED 700mA	104 Watts	12.00 Metres	Galvanised Steel	
Y	18	STREET LIGHTING	LACEBY ROUNDABOUT (A18)	LACEBY	520650.08	405847.89	2006		52075	1 Urbis LED	Teceo 48 LED 700mA	104 Watts	12.00 Metres	Galvanised Steel	
Y	19	STREET LIGHTING	LACEBY ROUNDABOUT (A18)	LACEBY	520662.01	405862.28	2006		52076	1 Urbis LED	Teceo 48 LED 700mA	104 Watts	12.00 Metres	Galvanised Steel	
Y	1	STREET LIGHTING	REFUSE TIP FOOTPATH	LACEBY	521041.84	406736.99	2000		55980	Urbis	Axia 8 LED 350mA	10 Watts	5.00 Metres	Galvanised Steel	
Y	2	STREET LIGHTING	REFUSE TIP FOOTPATH	LACEBY	520997.89	406731.54	2008		55981	Urbis	Axia 8 LED 350mA	10 Watts	6.00 Metres	Galvanised Steel	
Y	3	STREET LIGHTING	REFUSE TIP FOOTPATH	LACEBY	520960.93	406719.14	2002		55982	Urbis	Axia 8 LED 350mA	10 Watts	6.00 Metres	Galvanised Steel	
Y	4	STREET LIGHTING	REFUSE TIP FOOTPATH	LACEBY	520926.47	406707.11	2008		55983	Urbis	Axia 8 LED 350mA	10 Watts	6.00 Metres	Galvanised Steel	
Y	5	STREET LIGHTING	REFUSE TIP FOOTPATH	LACEBY	520912.87	406695.17	2008		55984	Urbis	Axia 8 LED 350mA	10 Watts	6.00 Metres	Galvanised Steel	
Y	6	STREET LIGHTING	REFUSE TIP FOOTPATH	LACEBY	520924.31	406668.41	2008		55985	Urbis	Axia 8 LED 350mA	10 Watts	6.00 Metres	Galvanised Steel	
Y	1	STREET LIGHTING	HAWTHORN AVE FOOTPATH	NEW WALTHAM	528010.68	404447.96	2017		50388	Urbis	Axia 16 LED 350mA	19 Watts	6.00 Metres	Steel	
Y	2	STREET LIGHTING	HAWTHORN AVE FOOTPATH	NEW WALTHAM	527999.74	404490.19	2017		50389	Urbis	Axia 16 LED 350mA	19 Watts	6.00 Metres	Steel	
Y	3	STREET LIGHTING	HAWTHORN AVE FOOTPATH	NEW WALTHAM	527985.77	404532.76	2017		50390	Urbis	Axia 16 LED 350mA	19 Watts	6.00 Metres	Steel	
Y	1	STREET LIGHTING	STATION ROAD WEST	NEW WALTHAM	527657.19	404477.38	1970		58427	1 Urbis LED	Teceo 48 LED 700mA	104 Watts	10.00 Metres	Galvanised Steel	
Y	2	STREET LIGHTING	STATION ROAD WEST	NEW WALTHAM	527635.37	404469	1970		58428	1 Urbis LED	Teceo 48 LED 700mA	104 Watts	10.00 Metres	Galvanised Steel	
Y	3	STREET LIGHTING	STATION ROAD WEST	NEW WALTHAM	527605.19	404447.53	1970		58429	1 Urbis LED	Teceo 48 LED 700mA	104 Watts	10.00 Metres	Galvanised Steel	
Y	4	STREET LIGHTING	STATION ROAD WEST	NEW WALTHAM	527563.28	404444.23	1970		58430	1 Urbis LED	Teceo 48 LED 700mA	104 Watts	10.00 Metres	Galvanised Steel	
Y	5	STREET LIGHTING	STATION ROAD WEST	NEW WALTHAM	527526.96	404420.69	1970		58431	1 Urbis LED	Teceo 48 LED 500mA	79 Watts	10.00 Metres	Galvanised Steel	
Y	6	STREET LIGHTING	STATION ROAD WEST	NEW WALTHAM	527480.16	404417.71	2004		58432	1 Urbis LED	Teceo 48 LED 700mA	104 Watts	10.00 Metres	Stainless Steel	
Y	7	STREET LIGHTING	STATION ROAD WEST	NEW WALTHAM	527443.98	404391.94	2002		58433	1 Urbis LED	Teceo 48 LED 700mA	104 Watts	10.00 Metres	Galvanised Steel	
Y	8	STREET LIGHTING	STATION ROAD WEST	NEW WALTHAM	527402.46	404389.33	1970		58434	1 Urbis LED	Teceo 48 LED 700mA	104 Watts	10.00 Metres	Galvanised Steel	
Y	9	STREET LIGHTING	STATION ROAD WEST	NEW WALTHAM	527363.98	404365.61	2003		58435	1 Urbis LED	Teceo 48 LED 700mA	104 Watts	10.00 Metres	Stainless Steel	
Y	10	STREET LIGHTING	STATION ROAD WEST	NEW WALTHAM	527325.16	404362.66	1970		58436	1 Urbis LED	Teceo 48 LED 700mA	104 Watts	10.00 Metres	Galvanised Steel	
Y	1	STREET LIGHTING	TOLL BAR ROUNDABOUT	NEW WALTHAM	527704.5	404519.55	1990		59265	1 Urbis LED	Teceo 48 LED 500mA	79 Watts	10.00 Metres	Galvanised Steel	
Y	2	STREET LIGHTING	TOLL BAR ROUNDABOUT	NEW WALTHAM	527725.88	404508.4	1990		59266	Urbis	Ampera Maxi 80 LED 700m	163 Watts	10.00 Metres	Galvanised Steel	
Y	3	STREET LIGHTING	TOLL BAR ROUNDABOUT	NEW WALTHAM	527734.42	404486.01	2022	01/04/2022	69668	Urbis	Ampera Maxi 80 LED 700m	163 Watts	10.00 Metres	Galvanised Steel	
Y	4	STREET LIGHTING	TOLL BAR ROUNDABOUT	NEW WALTHAM	527727.92	404471.01	2022	01/04/2022	69669	Urbis	Ampera Maxi 80 LED 700m	163 Watts	10.00 Metres	Galvanised Steel	
Y	5	STREET LIGHTING	TOLL BAR ROUNDABOUT	NEW WALTHAM	527708.27	404459.71	2022	01/04/2022	69670	Urbis	Ampera Maxi 80 LED 700m	163 Watts	10.00 Metres	Galvanised Steel	
Y	6	STREET LIGHTING	TOLL BAR ROUNDABOUT	NEW WALTHAM	527686.31	404469.29	2022	01/04/2022	69671	Urbis	Ampera Maxi 80 LED 700m	163 Watts	10.00 Metres	Galvanised Steel	
Y	7	STREET LIGHTING	TOLL BAR ROUNDABOUT	NEW WALTHAM	527680.3	404489.42	1990		59271	Urbis	Ampera Maxi 80 LED 700m	163 Watts	10.00 Metres	Galvanised Steel	
Y	8	STREET LIGHTING	TOLL BAR ROUNDABOUT	NEW WALTHAM	527683.12	404504.37	1990		59272	1 Urbis LED	Teceo 48 LED 500mA	79 Watts	10.00 Metres	Galvanised Steel	
Y	1	STREET LIGHTING	KILN LANE LINK	STALLINGBOROUGH	520177.96	413392.6	1984		51648	1 Urbis LED	Teceo 48 LED 700mA	104 Watts	10.00 Metres	Galvanised Steel	
Y	1	STREET LIGHTING	KILN LANE WEST	STALLINGBOROUGH	520552.71	413602.75	1984		61668	1 Urbis LED	Teceo 48 LED 500mA	79 Watts	10.00 Metres	Galvanised Steel	
Y	1	STREET LIGHTING	KILN LANE WEST	STALLINGBOROUGH	520552.71	413602.75	1984		62200	1 Urbis LED	Teceo 48 LED 500mA	79 Watts	10.00 Metres	Galvanised Steel	
Y	2	STREET LIGHTING	KILN LANE WEST	STALLINGBOROUGH	520523.22	413589.65	1984		51649	1 Urbis LED	Teceo 48 LED 500mA	79 Watts	10.00 Metres	Galvanised Steel	
Y	3	STREET LIGHTING	KILN LANE WEST	STALLINGBOROUGH	520501.29	413565.76	1984		51650	1 Urbis LED	Teceo 48 LED 500mA	79 Watts	10.00 Metres	Galvanised Steel	
Y	4	STREET LIGHTING	KILN LANE WEST	STALLINGBOROUGH	520473.57	413551.21	2005		51651	1 Urbis LED	Teceo 48 LED 500mA	79 Watts	10.00 Metres	Stainless Steel	
Y	5	STREET LIGHTING	KILN LANE WEST	STALLINGBOROUGH	520445.73	413536.84	1984		51652	1 Urbis LED	Teceo 48 LED 500mA	79 Watts	10.00 Metres	Galvanised Steel	
Y	6	STREET LIGHTING	KILN LANE WEST	STALLINGBOROUGH	520412.41	413533.14	1984		51653	1 Urbis LED	Teceo 48 LED 500mA	79 Watts	10.00 Metres	Galvanised Steel	
Y	7	STREET LIGHTING	KILN LANE WEST	STALLINGBOROUGH	520388.11	413509.73	2008		51654	1 Urbis LED	Teceo 48 LED 500mA	79 Watts	10.00 Metres	Steel	
Y	8	STREET LIGHTING	KILN LANE WEST	STALLINGBOROUGH	520355.63	413508.47	1984		51655	1 Urbis LED	Teceo 48 LED 500mA	79 Watts	10.00 Metres	Galvanised Steel	
Y	9	STREET LIGHTING	KILN LANE WEST	STALLINGBOROUGH	520329.17	413484.55	1984		51656	1 Urbis LED	Teceo 48 LED 500mA	79 Watts	10.00 Metres	Galvanised Steel	
Y	10	STREET LIGHTING	KILN LANE WEST	STALLINGBOROUGH	520295.94	413484.44	1984		51657	1 Urbis LED	Teceo 48 LED 500mA	79 Watts	10.00 Metres	Galvanised Steel	
Y	11	STREET LIGHTING	KILN LANE WEST	STALLINGBOROUGH	520272.52	413463.43	1984		51658	1 Urbis LED	Teceo 48 LED 500mA	79 Watts	10.00 Metres	Galvanised Steel	
Y	12	STREET LIGHTING	KILN LANE WEST	STALLINGBOROUGH	520243.1	413465.34	1984		51659	1 Urbis LED	Teceo 48 LED 500mA	79 Watts	10.00 Metres	Galvanised Steel	
Y	13	STREET LIGHTING	KILN LANE WEST	STALLINGBOROUGH	520217.28	413445.46	1984		51660	1 Urbis LED	Teceo 48 LED 500mA	79 Watts	10.00 Metres	Galvanised Steel	
Y	14	STREET LIGHTING	KILN LANE WEST	STALLINGBOROUGH	520185.51	413441.48	1984		61669	1 Urbis LED	Teceo 48 LED 500mA	79 Watts	10.00 Metres	Galvanised Steel	
Y	14	STREET LIGHTING	KILN LANE WEST	STALLINGBOROUGH	520185.51	413441.48	1984		62201	1 Urbis LED	Teceo 48 LED 500mA	79 Watts	10.00 Metres	Galvanised Steel	
Y	1	STREET LIGHTING	LAPORTE ROUNDABOUT	STALLINGBOROUGH	520173.5	413440.29	1980		52332	1 Urbis LED	Teceo 48 LED 700mA	104 Watts	10.00 Metres	Galvanised Steel	
Y	2	STREET LIGHTING	LAPORTE ROUNDABOUT	STALLINGBOROUGH	520179.58	413418.12	1980		52333	1 Urbis LED	Teceo 48 LED 700mA	104 Watts	10.00 Metres	Galvanised Steel	
Y	3	STREET LIGHTING	LAPORTE ROUNDABOUT	STALLINGBOROUGH	520155.07	413399.68	1980		52334	1 Urbis LED	Teceo 48 LED 700mA	104 Watts	10.00 Metres	Galvanised Steel	
Y	4	STREET LIGHTING	LAPORTE ROUNDABOUT	STALLINGBOROUGH	520136.84	413411.03	2008		52335	1 Urbis LED	Teceo 48 LED 700mA	104 Watts	10.00 Metres	Steel	
Y	5	STREET LIGHTING	LAPORTE ROUNDABOUT	STALLINGBOROUGH	520129.15	413435.73	1980		52336	1 Urbis LED	Teceo 48 LED 700mA	104 Watts	10.00 Metres	Galvanised Steel	
Y	6	STREET LIGHTING	LAPORTE ROUNDABOUT	STALLINGBOROUGH	520153.25	413452.85	1980		52337	1 Urbis LED	Teceo 48 LED 700mA	104 Watts	10.00 Metres	Galvanised Steel	
Y	1	STREET LIGHTING	NEW IMMINGHAM ROAD	STALLINGBOROUGH	520135.83	413449.61	2004		61816	1 Urbis LED	Teceo 48 LED 500mA	79 Watts	10.00 Metres	Stainless Steel	
Y	1	STREET LIGHTING	NEW IMMINGHAM ROAD	STALLINGBOROUGH	520135.83	413449.61	2004		62348	1 Urbis LED	Teceo 48 LED 500mA	79 Watts	10.00 Metres	Stainless Steel	

Y	2	STREET LIGHTING	NEW IMMINGHAM ROAD	STALLINGBOROUGH	520125.7	413477.66	1980		54038	1 Urbis LED	Teceo 48 LED 500mA	79 Watts	10.00 Metres	Galvanised Steel	
Y	3	STREET LIGHTING	NEW IMMINGHAM ROAD	STALLINGBOROUGH	520100.59	413497.31	1980		54039	1 Urbis LED	Teceo 48 LED 500mA	79 Watts	10.00 Metres	Galvanised Steel	
Y	1	STREET LIGHTING	NORTH MOSS LANE ROUNDABOUT	STALLINGBOROUGH	520595.17	413638.06	2023	24/02/2023	69208	Urbis	Teceo 48 LED 700mA	104 Watts	12.00 Metres	Galvanised Steel	
Y	2	STREET LIGHTING	NORTH MOSS LANE ROUNDABOUT	STALLINGBOROUGH	520603.85	413612.56	1980		54218	1 Urbis LED	Teceo 48 LED 500mA	79 Watts	10.00 Metres	Galvanised Steel	
Y	3	STREET LIGHTING	NORTH MOSS LANE ROUNDABOUT	STALLINGBOROUGH	520578.78	413594.13	1980		54219	1 Urbis LED	Teceo 48 LED 500mA	79 Watts	10.00 Metres	Galvanised Steel	
Y	4	STREET LIGHTING	NORTH MOSS LANE ROUNDABOUT	STALLINGBOROUGH	520556.76	413604.64	1980		54220	1 Urbis LED	Teceo 48 LED 500mA	79 Watts	10.00 Metres	Galvanised Steel	
Y	5	STREET LIGHTING	NORTH MOSS LANE ROUNDABOUT	STALLINGBOROUGH	520550.18	413622.42	1980		54221	1 Urbis LED	Teceo 48 LED 500mA	79 Watts	10.00 Metres	Galvanised Steel	
Y	6	STREET LIGHTING	NORTH MOSS LANE ROUNDABOUT	STALLINGBOROUGH	520560.18	413639.06	1989		54222	1 Urbis LED	Teceo 48 LED 500mA	79 Watts	10.00 Metres	Galvanised Steel	
Y	7	STREET LIGHTING	NORTH MOSS LANE ROUNDABOUT	STALLINGBOROUGH	520580.3	413648.51	1980		54223	1 Urbis LED	Teceo 48 LED 500mA	79 Watts	10.00 Metres	Galvanised Steel	
Y	1	STREET LIGHTING	OLD RIBY ROAD	STALLINGBOROUGH	519674.08	411359.62	2007		54387	Urbis	Axia 8 LED 350mA	10 Watts	6.00 Metres	Galvanised Steel	
Y	2	STREET LIGHTING	OLD RIBY ROAD	STALLINGBOROUGH	519648.76	411346.71	2007		54388	Urbis	Axia 8 LED 350mA	10 Watts	6.00 Metres	Galvanised Steel	
Y	3	STREET LIGHTING	OLD RIBY ROAD	STALLINGBOROUGH	519620.91	411332.53	2007		54389	Urbis	Axia 8 LED 350mA	10 Watts	6.00 Metres	Galvanised Steel	
Y	1	STREET LIGHTING	OLDFLEET ROAD EAST	STALLINGBOROUGH	522916.95	412903.02	2021	01/02/2021	68404	Urbis	mpera Maxi 128 LED 700m	277 Watts	10.00 Metres	Galvanised Steel	
Y	1	STREET LIGHTING	OLDFLEET ROAD SOUTH	STALLINGBOROUGH			2021	01/02/2021	68405	Urbis	mpera Maxi 128 LED 700m	277 Watts	10.00 Metres	Galvanised Steel	
Y	1	STREET LIGHTING	OLDFLEET ROAD R/A SHBILR	STALLINGBOROUGH			2021	01/02/2021	68406	Urbis	mpera Maxi 128 LED 700m	277 Watts	10.00 Metres	Galvanised Steel	
Y	2	STREET LIGHTING	OLDFLEET ROAD R/A SHBILR	STALLINGBOROUGH			2021	01/02/2021	68407	Urbis	mpera Maxi 128 LED 700m	277 Watts	10.00 Metres	Galvanised Steel	
Y	3	STREET LIGHTING	OLDFLEET ROAD R/A SHBILR	STALLINGBOROUGH			2021	01/02/2021	68408	Urbis	mpera Maxi 128 LED 700m	277 Watts	10.00 Metres	Galvanised Steel	
Y	4	STREET LIGHTING	OLDFLEET ROAD R/A SHBILR	STALLINGBOROUGH			2021	01/02/2021	68409	Urbis	mpera Maxi 128 LED 700m	277 Watts	10.00 Metres	Galvanised Steel	
Y	1	STREET LIGHTING	RIBY ROAD ROUNDABOUT	STALLINGBOROUGH	519488.71	411285.84	2017		56062	1 Urbis LED	Teceo 48 LED 700mA	104 Watts	10.00 Metres	Galvanised Steel	
Y	2	STREET LIGHTING	RIBY ROAD ROUNDABOUT	STALLINGBOROUGH	519466.66	411302.64	2017		56063	1 Urbis LED	Teceo 48 LED 700mA	104 Watts	10.00 Metres	Galvanised Steel	
Y	3	STREET LIGHTING	RIBY ROAD ROUNDABOUT	STALLINGBOROUGH	519457.93	411348.71	2017		56064	1 Urbis LED	Teceo 48 LED 700mA	104 Watts	10.00 Metres	Galvanised Steel	
Y	4	STREET LIGHTING	RIBY ROAD ROUNDABOUT	STALLINGBOROUGH	519479.29	411375.89	2017		56065	1 Urbis LED	Teceo 48 LED 700mA	104 Watts	10.00 Metres	Galvanised Steel	
Y	5	STREET LIGHTING	RIBY ROAD ROUNDABOUT	STALLINGBOROUGH	519503.8	411384.6	2017		56066	1 Urbis LED	Teceo 48 LED 700mA	104 Watts	10.00 Metres	Galvanised Steel	
Y	6	STREET LIGHTING	RIBY ROAD ROUNDABOUT	STALLINGBOROUGH	519536.1	411373.98	2017		56067	1 Urbis LED	Teceo 48 LED 700mA	104 Watts	10.00 Metres	Galvanised Steel	
Y	7	STREET LIGHTING	RIBY ROAD ROUNDABOUT	STALLINGBOROUGH	519552.56	411351.89	2017		56068	1 Urbis LED	Teceo 48 LED 700mA	104 Watts	10.00 Metres	Galvanised Steel	
Y	8	STREET LIGHTING	RIBY ROAD ROUNDABOUT	STALLINGBOROUGH	519553.82	411319.99	2017		56069	1 Urbis LED	Teceo 48 LED 700mA	104 Watts	10.00 Metres	Galvanised Steel	
Y	9	STREET LIGHTING	RIBY ROAD ROUNDABOUT	STALLINGBOROUGH	519522.76	411286.91	2017		56070	1 Urbis LED	Teceo 48 LED 700mA	104 Watts	10.00 Metres	Galvanised Steel	
Y	1	STREET LIGHTING	SCM ROUNDABOUT SHBILR	STALLINGBOROUGH	521703.53	414366.72	1992		56764	1 Urbis LED	Teceo 48 LED 700mA	104 Watts	12.00 Metres	Galvanised Steel	
Y	2	STREET LIGHTING	SCM ROUNDABOUT SHBILR	STALLINGBOROUGH	521733.09	414379.55	1992		56765	1 Urbis LED	Teceo 48 LED 700mA	104 Watts	12.00 Metres	Galvanised Steel	
Y	3	STREET LIGHTING	SCM ROUNDABOUT SHBILR	STALLINGBOROUGH	521752.28	414350.47	1992		56766	1 Urbis LED	Teceo 48 LED 700mA	104 Watts	12.00 Metres	Galvanised Steel	
Y	4	STREET LIGHTING	SCM ROUNDABOUT SHBILR	STALLINGBOROUGH	521722.43	414326.08	1992		56767	1 Urbis LED	Teceo 48 LED 700mA	104 Watts	12.00 Metres	Galvanised Steel	
Y	1	STREET LIGHTING	SOUTH MARSH ROAD NORTH SHBILR	STALLINGBOROUGH	522360.07	413415.48	1992		57352	1 Urbis LED	Teceo 48 LED 500mA	79 Watts	10.00 Metres	Galvanised Steel	
Y	2	STREET LIGHTING	SOUTH MARSH ROAD NORTH SHBILR	STALLINGBOROUGH	522385.9	413424.34	2009		57353	1 Urbis LED	Teceo 48 LED 500mA	79 Watts	10.00 Metres	Steel	
Y	3	STREET LIGHTING	SOUTH MARSH ROAD NORTH SHBILR	STALLINGBOROUGH	522407.03	413441.37	1992		57354	1 Urbis LED	Teceo 48 LED 500mA	79 Watts	10.00 Metres	Galvanised Steel	
Y	4	STREET LIGHTING	SOUTH MARSH ROAD NORTH SHBILR	STALLINGBOROUGH	522476.86	413440.69	1992		57355	1 Urbis LED	Teceo 48 LED 500mA	79 Watts	10.00 Metres	Galvanised Steel	
Y	5	STREET LIGHTING	SOUTH MARSH ROAD NORTH SHBILR	STALLINGBOROUGH	522494.88	413433.49	1992		57356	1 Urbis LED	Teceo 48 LED 500mA	79 Watts	10.00 Metres	Galvanised Steel	
Y	6	STREET LIGHTING	SOUTH MARSH ROAD NORTH SHBILR	STALLINGBOROUGH	522516.76	413423.98	1992		57357	1 Urbis LED	Teceo 48 LED 500mA	79 Watts	10.00 Metres	Galvanised Steel	
Y	7	STREET LIGHTING	SOUTH MARSH ROAD NORTH SHBILR	STALLINGBOROUGH	522510.35	413445.57	1992		57358	1 Urbis LED	Teceo 48 LED 500mA	79 Watts	10.00 Metres	Galvanised Steel	
Y	8	STREET LIGHTING	SOUTH MARSH ROAD NORTH SHBILR	STALLINGBOROUGH	522533.36	413437	1992		57359	1 Urbis LED	Teceo 48 LED 500mA	79 Watts	10.00 Metres	Galvanised Steel	
Y	9	STREET LIGHTING	SOUTH MARSH ROAD NORTH SHBILR	STALLINGBOROUGH	522566.57	413441.55	1992		57360	1 Urbis LED	Teceo 48 LED 500mA	79 Watts	10.00 Metres	Galvanised Steel	
Y	10	STREET LIGHTING	SOUTH MARSH ROAD NORTH SHBILR	STALLINGBOROUGH	522599.5	413447.1	1992		57361	1 Urbis LED	Teceo 48 LED 500mA	79 Watts	10.00 Metres	Galvanised Steel	
Y	11	STREET LIGHTING	SOUTH MARSH ROAD NORTH SHBILR	STALLINGBOROUGH	522633.45	413452.17	1992		57362	1 Urbis LED	Teceo 48 LED 500mA	79 Watts	10.00 Metres	Galvanised Steel	
Y	12	STREET LIGHTING	SOUTH MARSH ROAD NORTH SHBILR	STALLINGBOROUGH	522668.48	413457.25	1992		57363	1 Urbis LED	Teceo 48 LED 500mA	79 Watts	10.00 Metres	Galvanised Steel	
Y	13	STREET LIGHTING	SOUTH MARSH ROAD NORTH SHBILR	STALLINGBOROUGH	522702.33	413462.19	1992		57364	1 Urbis LED	Teceo 48 LED 500mA	79 Watts	10.00 Metres	Galvanised Steel	
Y	14	STREET LIGHTING	SOUTH MARSH ROAD NORTH SHBILR	STALLINGBOROUGH	522737.14	413467.62	1992		57365	1 Urbis LED	Teceo 48 LED 500mA	79 Watts	10.00 Metres	Galvanised Steel	
Y	15	STREET LIGHTING	SOUTH MARSH ROAD NORTH SHBILR	STALLINGBOROUGH	522772.33	413473.22	2021	13/10/2021	68732	Urbis	Teceo 48 LED 500mA	79 Watts	12.00 Metres	Galvanised Steel	
Y	16	STREET LIGHTING	SOUTH MARSH ROAD NORTH SHBILR	STALLINGBOROUGH	522806.98	413478.28	1992		57367	1 Urbis LED	Teceo 48 LED 500mA	79 Watts	10.00 Metres	Galvanised Steel	
Y	17	STREET LIGHTING	SOUTH MARSH ROAD NORTH SHBILR	STALLINGBOROUGH	522840.91	413482.4	1992		57368	1 Urbis LED	Teceo 48 LED 500mA	79 Watts	10.00 Metres	Galvanised Steel	
Y	18	STREET LIGHTING	SOUTH MARSH ROAD NORTH SHBILR	STALLINGBOROUGH	522871.79	413487.87	1992		57369	1 Urbis LED	Teceo 48 LED 500mA	79 Watts	10.00 Metres	Galvanised Steel	
Y	19	STREET LIGHTING	SOUTH MARSH ROAD NORTH SHBILR	STALLINGBOROUGH	522905.84	413493.12	1992		57370	1 Urbis LED	Teceo 48 LED 500mA	79 Watts	10.00 Metres	Galvanised Steel	
Y	20	STREET LIGHTING	SOUTH MARSH ROAD NORTH SHBILR	STALLINGBOROUGH	522940.5	413498.2	1992		57371	1 Urbis LED	Teceo 48 LED 500mA	79 Watts	10.00 Metres	Galvanised Steel	
Y	21	STREET LIGHTING	SOUTH MARSH ROAD NORTH SHBILR	STALLINGBOROUGH	522975.05	413503.18	1992		57372	1 Urbis LED	Teceo 48 LED 500mA	79 Watts	10.00 Metres	Galvanised Steel	
Y	22	STREET LIGHTING	SOUTH MARSH ROAD NORTH SHBILR	STALLINGBOROUGH	523010.83	413508.13	1992		57373	1 Urbis LED	Teceo 48 LED 500mA	79 Watts	10.00 Metres	Galvanised Steel	
Y	23	STREET LIGHTING	SOUTH MARSH ROAD NORTH SHBILR	STALLINGBOROUGH	523046.02	413513.13	1992		57374	1 Urbis LED	Teceo 48 LED 500mA	79 Watts	10.00 Metres	Galvanised Steel	
Y	24	STREET LIGHTING	SOUTH MARSH ROAD NORTH SHBILR	STALLINGBOROUGH	523080.57	413517.75	1992		57375	1 Urbis LED	Teceo 48 LED 500mA	79 Watts	10.00 Metres	Galvanised Steel	
Y	25	STREET LIGHTING	SOUTH MARSH ROAD NORTH SHBILR	STALLINGBOROUGH	523106.8	413521.58	1992		57376	Urbis	AXIA 3.2 32 LED 630 mA	62 Watts	10.00 Metres	Galvanised Steel	
Y	26	STREET LIGHTING	SOUTH MARSH ROAD NORTH SHBILR	STALLINGBOROUGH	523138.47	413526.01	1992		57377	1 Urbis LED	Teceo 48 LED 500mA	79 Watts	10.00 Metres	Galvanised Steel	
Y	27	STREET LIGHTING	SOUTH MARSH ROAD NORTH SHBILR	STALLINGBOROUGH	523170.72	413529.04	1992		57378	1 Urbis LED	Teceo 48 LED 500mA	79 Watts	10.00 Metres	Galvanised Steel	
Y	1	STREET LIGHTING	STALLINGBOROUGH I/C	STALLINGBOROUGH	519366.59	412799.18	1980		58021	1 Urbis LED	Teceo 48 LED 500mA	79 Watts	10.00 Metres	Galvanised Steel	
Y	2	STREET LIGHTING	STALLINGBOROUGH I/C	STALLINGBOROUGH	519385.32	412810.37	1980		58022	1 Urbis LED	Teceo 48 LED 500mA	79 Watts	10.00 Metres	Galvanised Steel	
Y	3	STREET LIGHTING	STALLINGBOROUGH I/C	STALLINGBOROUGH	519405.45	412812.2	1980		58023	1 Urbis LED	Teceo 48 LED 500mA	79 Watts	10.00 Metres	Galvanised Steel	
Y	4	STREET LIGHTING	STALLINGBOROUGH I/C	STALLINGBOROUGH	519425.83	412808.09	1980		58024	1 Urbis LED	Teceo 48 LED 500mA	79 Watts	10.00 Metres	Steel	
Y	5	STREET LIGHTING	STALLINGBOROUGH I/C	STALLINGBOROUGH	519444.81	412800.92	1980		58025	1 Urbis LED	Teceo 48 LED 500mA	79 Watts	10.00 Metres	Galvanised Steel	
Y	6	STREET LIGHTING	STALLINGBOROUGH I/C	STALLINGBOROUGH	519459.62	412780.17	1980		58026	1 Urbis LED	Teceo 48 LED 500mA	79 Watts	10.00 Metres	Galvanised Steel	
Y	7	STREET LIGHTING	STALLINGBOROUGH I/C	STALLINGBOROUGH	519456.21	412759.02	1980		58027	1 Urbis LED	Teceo 48 LED 500mA	79 Watts	10.00 Metres	Galvanised Steel	
Y	8	STREET LIGHTING	STALLINGBOROUGH I/C	STALLINGBOROUGH	519451.9	412737.5	1980		58028	1 Urbis LED	Teceo 48 LED 500mA	79 Watts	18.00 Metres	Galvanised Steel	
Y	9	STREET LIGHTING	STALLINGBOROUGH I/C	STALLINGBOROUGH	519446.33	412713.45	1980		58029	1 Urbis LED	Teceo 48 LED 500mA	79 Watts	18.00 Metres	Galvanised Steel	
Y	10	STREET LIGHTING	STALLINGBOROUGH I/C	STALLINGBOROUGH	519441.52	412696.61	1980		58030	1 Urbis LED	Teceo 48 LED 500mA	79 Watts	10.00 Metres	Galvanised Steel	
Y	11	STREET LIGHTING	STALLINGBOROUGH I/C	STALLINGBOROUGH	519444.18	412680.58	1980		58031	1 Urbis LED	Teceo 48 LED 500mA	79 Watts	10.00 Metres	Galvanised Steel	
Y	12	STREET LIGHTING	STALLINGBOROUGH I/C	STALLINGBOROUGH	519423.93	412669.21	1980		58032	1 Urbis LED	Teceo 48 LED 500mA	79 Watts	10.00 Metres	Galvanised Steel	
Y	13	STREET LIGHTING	STALLINGBOROUGH I/C	STALLINGBOROUGH	519407.04	412662.7	1980		58033	1 Urbis LED	Teceo 48 LED 500mA	79 Watts	10.00 Metres	Galvanised Steel	
Y	14	STREET LIGHTING	STALLINGBOROUGH I/C	STALLINGBOROUGH	519383.55	412662.29	1980		58034	1 Urbis LED	Teceo 48 LED 500mA	79 Watts	10.00 Metres	Galvanised Steel	
Y	15	STREET LIGHTING	STALLINGBOROUGH I/C	STALLINGBOROUGH	519363.8	412670.94	1980		58035	1 Urbis LED	Teceo 48 LED 500mA	79 Watts	10.00 Metres	Galvanised Steel	
Y	16	STREET LIGHTING	STALLINGBOROUGH I/C	STALLINGBOROUGH	519344.69	412687.71	1980		58036	1 Urbis LED	Teceo 48 LED 500mA	79 Watts	10.00 Metres	Galvanised Steel	
Y	17	STREET LIGHTING	STALLINGBOROUGH I/C	STALLINGBOROUGH	519344.43	412714.87	1980		58037	1 Urbis LED	Teceo 48 LED 500mA	79 Watts	10.00 Metres	Galvanised Steel	
Y	18	STREET LIGHTING	STALLINGBOROUGH I/C	STALLINGBOROUGH	519348.99	412739.24	1980		58038	1 Urbis LED	Teceo 48 LED 500mA	79 Watts	18.00 Metres	Galvanised Steel	
Y	19	STREET LIGHTING	STALLINGBOROUGH I/C	STALLINGBOROUGH	519355.19	412763.16	1980		58039	1 Urbis LED	Teceo 48 LED 500mA	79 Watts	18.00 Metres	Galvanised Steel	
Y	20	STREET LIGHTING	STALLINGBOROUGH I/C	STALLINGBOROUGH	519360.26	412781.27	1980		58040	1 Urbis LED	Teceo 48 LED 500mA	79 Watts	10.00 Metres	Galvanised Steel	
Y	1	STREET LIGHTING	STALLINGBOROUGH LINK ROAD	STALLINGBOROUGH	519406.26	412826.91	1980		58041	1 Urbis LED	Teceo 48 LED 500mA	79 Watts	10.00 Metres	Galvanised Steel	
Y	2	STREET LIGHTING	STALLINGBOROUGH LINK ROAD	STALLINGBOROUGH	519438.61	412814.47	1980		58042	1 Urbis LED	Teceo 48 LED 500mA	79 Watts	10.00 Metres	Galvanised Steel	
Y	3	STREET LIGHTING	STALLINGBOROUGH LINK ROAD	STALLINGBOROUGH	519425.07	412846.34	1980		58043	1 Urbis LED	Teceo 48 LED 500mA	79 Watts	10.00 Metres	Galvanised Steel	
Y	4	STREET LIGHTING	STALLINGBOROUGH LINK ROAD	STALLINGBOROUGH	519441.9	412840.23	1980		58044	1 Urbis LED	Teceo 48 LED 500mA	79 Watts	10.00 Metres	Galvanised Steel	
Y	5	STREET LIGHTING	STALLINGBOROUGH LINK ROAD	STALLINGBOROUGH	519441.78	412869.89	1980		58045	1 Urbis LED	Teceo 48 LED 500mA	79 Watts	10.00 Metres	Galvanised Steel	
Y	6	STREET LIGHTING	STALLINGBOROUGH LINK ROAD	STALLINGBOROUGH	519452.66	412867.3	2005		58046	1 Urbis LED	Teceo 48 LED 500mA	79 Watts	10.00 Metres	Stainless Steel	
Y	7	STREET LIGHTING	STALLINGBOROUGH LINK ROAD	STALLINGBOROUGH	520066.77	413383.41	1980		58047	1 Urbis LED	Teceo 48 LED 500mA	79 Watts	10.00 Metres	Galvanised Steel	
Y	8	STREET LIGHTING	STALLINGBOROUGH LINK ROAD	STALLINGBOROUGH	520103.38	413387.87	1980		58048	1 Urbis LED	Teceo 48 LED 500mA	79 Watts	10.00 Metres	Galvanised Steel	
Y	9	STREET LIGHTING	STALLINGBOROUGH LINK ROAD	STALLINGBOROUGH	520128.31	413404.95	1980		61907	1 Urbis LED	Teceo 48 LED 700mA	104 Watts	10.00 Metres	Galvanised Steel	
Y	9	STREET LIGHTING	STALLINGBOROUGH LINK ROAD	STALLINGBOROUGH	520128.31	413404.95	1980		62441	1 Urbis LED	Teceo 48 LED 700mA	104 Watts	10.00 Metres	Galvanised Steel	
Y	1	STREET LIGHTING	BARNOLDBY/SALISBURY FOOTPATH	WALTHAM				06/06/2023	69226	Urbis	Axia 8 LED 350mA	10 Watts	6.00 Metres	Steel	
Y	2	STREET LIGHTING	BARNOLDBY/SALISBURY FOOTPATH	WALTHAM				06/06/2023	70176	Urbis	Axia 8 LED 350mA	10 Watts	6.00 Metres	Steel	
Y	3	STREET LIGHTING	BARNOLDBY/SALISBURY FOOTPATH	WALTHAM				06/06/2023	70177	Urbis	Axia 8 LED 350mA	10 Watts	6.00 Metres	Steel	
Y	1	STREET LIGHTING	GRIMSBY ROAD HIGH STREET	WALTHAM	526459.29	404066.58	1988		49924	1 Urbis LED	Teceo 40 LED 500mA	64 Watts	10.00 Metres	Galvanised Steel	
Y	2	STREET LIGHTING	GRIMSBY ROAD HIGH STREET	WALTHAM	526467.89	404091.39	2020	18/02/2020	67633	Urbis	AMPERA 48 LED 800mA	113 Watts	12.00 Metres	Galvanised Steel	
Y	3	STREET LIGHTING	GRIMSBY ROAD HIGH STREET	WALTHAM	526484.35	404077.47	1983		49926	1 Urbis LED	Teceo 40 LED 500mA	64 Watts	10.00 Metres	Galvanised Steel	
Y	1	STREET LIGHTING	LONGHORN COURT FOOTPATH	WALTHAM	524919.15	403904.78	1989		52762	Urbis	Axia 8 LED 350mA	10 Watts	5.00 Metres	Galvanised Steel	
Y	1	STREET LIGHTING	MUIRFIELD FOOTPATH	WALTHAM	525047.15	403610.72	1980		53906	Urbis	Axia 8 LED 350mA	10 Watts	5.00 Metres	Galvanised Steel	
Y	2	STREET LIGHTING	MUIRFIELD FOOTPATH	WALTHAM	525066.39	403585.7	1980		53907	Urbis	Axia 8 LED 350mA	10 Watts	5.00 Metres	Galvanised Steel	
Y	3	STREET LIGHTING	MUIRFIELD FOOTPATH	WALTHAM	525087.04	403558.66	1980		53908	Urbis	Axia 8 LED 350mA	10 Watts	5.00 Metres	Galvanised Steel	
Y	1	STREET LIGHTING	STATION ROAD CDS	WALTHAM	526553.71	404083.93	1992		58377	Urbis	Axia 16 LED 350mA	19 Watts	5.00 Metres	Galvanised Steel	
Y	2	STREET LIGHTING	STATION ROAD CDS	WALTHAM	526539.79	404066.4	1992		58378	Urbis	Axia 16 LED 350mA	19 Watts	5.00 Metres	Galvanised Steel	
Y	1	STREET LIGHTING	ACTON COURT	GRIMSBY	528139.03	410267.76	2007		42728	1 Urbis LED	Axia 16 LED 500mA	28 Watts	6.00 Metres	Galvanised Steel	
Y	2	STREET LIGHTING	ACTON COURT	GRIMSBY	528135.53	410247.23	1967		42729	1 Urbis LED	Axia 16 LED 500mA	28 Watts	6.00 Metres	Galvanised Steel	
Y	1	STREET LIGHTING	AIREDALE WAY	GRIMSBY	526615.69	409811.07	2011		42803	Urbis	Axia 16 LED 350mA	19 Watts	6.00 Metres	Steel	
Y	2	STREET LIGHTING	AIREDALE WAY	GRIMSBY	526581.54	409811.88	2011		42804	Urbis	Axia 16 LED 350mA	19 Watts	6.00 Metres	Steel	
Y	1	STREET LIGHTING	GOATHLAND COURT	GRIMSBY	524426.83	409911.57	2012		49341	Urbis	Axia 16 LED 350mA	19 Watts	6.00 Metres	Steel	
Y	2	STREET LIGHTING	GOATHLAND COURT	GRIMSBY	524408.47	409917.78	2001		49342	Urbis	Axia 16 LED 350mA	19 Watts	6.00 Metres	Galvanised Steel	
Y	3	STREET LIGHTING	GOATHLAND COURT	GRIMSBY	524405.16	409941.07	2008		49343	Urbis	Axia 16 LED 350mA	19 Watts	6.00 Metres	Steel	
Y	1	STREET LIGHTING	THAMES COURT	GRIMSBY	524167.31	409820.93	2010		58892	Urbis	Axia 8 LED 350mA	10 Watts	6.00 Metres	Steel	
Y	2	STREET LIGHTING	THAMES COURT	GRIMSBY	524149.44	409839.02	2010		58893	Urbis	Axia 8 LED 350mA	10 Watts	6.00 Metres	Steel	
Y	3	STREET LIGHTING	THAMES COURT	GRIMSBY	524141.34	409841.25	2010		58894	Urbis	Axia 8 LED 350mA	10 Watts	6.00 Metres	Steel	

Y	4	STREET LIGHTING	THAMES COURT	GRIMSBY	524121.55	409835.75	2010		58895	Urbis	Axia 8 LED 350mA	10 Watts	6.00 Metres	Steel	
Y	5	STREET LIGHTING	THAMES COURT	GRIMSBY	524109.65	409826.9	2010		58896	Urbis	Axia 8 LED 350mA	10 Watts	6.00 Metres	Steel	
Y	6	STREET LIGHTING	THAMES COURT	GRIMSBY	524122.77	409819.24	2010		58897	Urbis	Axia 8 LED 350mA	10 Watts	6.00 Metres	Steel	
Y	7	STREET LIGHTING	THAMES COURT	GRIMSBY	524144.52	409795.56	2010		58898	Urbis	Axia 8 LED 350mA	10 Watts	6.00 Metres	Steel	
Y	1	STREET LIGHTING	WEST PARADE	GRIMSBY	526283.03	409233.56	1999		60318	Urbis	Axia 8 LED 350mA	10 Watts	5.00 Metres	Galvanised Steel	
Y	2	STREET LIGHTING	WEST PARADE	GRIMSBY	526261.15	409237.49	1999		60319	Urbis	Axia 8 LED 350mA	10 Watts	5.00 Metres	Galvanised Steel	
Y	3	STREET LIGHTING	WEST PARADE	GRIMSBY	526241.51	409256.69			67924	Urbis	Axia 8 LED 350mA	10 Watts	6.00 Metres	Steel	
Y	1	STREET LIGHTING	KINGS ROAD	CLEETHORPES	531426.5	407915.15	1998		51715	GoodLight	40 LED Bulb	40 Watts	8.00 Metres	Steel	
Y	2	STREET LIGHTING	KINGS ROAD	CLEETHORPES	531407.32	407907.83	2000		51716	GoodLight	40 LED Bulb	40 Watts	8.00 Metres	Galvanised Steel	
Y	3	STREET LIGHTING	KINGS ROAD	CLEETHORPES	531442.39	407886.45	2000		51717	GoodLight	40 LED Bulb	40 Watts	8.00 Metres	Galvanised Steel	
Y	4	STREET LIGHTING	KINGS ROAD	CLEETHORPES	531425.27	407873.3	2000		51718	GoodLight	40 LED Bulb	40 Watts	8.00 Metres	Galvanised Steel	
Y	5	STREET LIGHTING	KINGS ROAD	CLEETHORPES	531460.2	407856.46	2000		51719	GoodLight	40 LED Bulb	40 Watts	8.00 Metres	Galvanised Steel	
Y	6	STREET LIGHTING	KINGS ROAD	CLEETHORPES	531444.63	407845.24	2000		51720	GoodLight	40 LED Bulb	40 Watts	8.00 Metres	Galvanised Steel	
Y	7	STREET LIGHTING	KINGS ROAD	CLEETHORPES	531476.92	407827.83	2000		51721	GoodLight	40 LED Bulb	40 Watts	8.00 Metres	Galvanised Steel	
Y	8	STREET LIGHTING	KINGS ROAD	CLEETHORPES	531460.24	407818.47	2000		51722	GoodLight	40 LED Bulb	40 Watts	8.00 Metres	Galvanised Steel	
Y	9	STREET LIGHTING	KINGS ROAD	CLEETHORPES	531494.96	407799.37	2000		51723	GoodLight	40 LED Bulb	40 Watts	8.00 Metres	Galvanised Steel	
Y	10	STREET LIGHTING	KINGS ROAD	CLEETHORPES	531479.11	407785.59	2000		51724	GoodLight	40 LED Bulb	40 Watts	8.00 Metres	Galvanised Steel	
Y	11	STREET LIGHTING	KINGS ROAD	CLEETHORPES	531507.87	407767.11	2000		51725	GoodLight	40 LED Bulb	40 Watts	8.00 Metres	Galvanised Steel	
Y	12	STREET LIGHTING	KINGS ROAD	CLEETHORPES	531492.16	407753.02	2000		51726	GoodLight	40 LED Bulb	40 Watts	8.00 Metres	Galvanised Steel	
Y	13	STREET LIGHTING	KINGS ROAD	CLEETHORPES	531521.3	407735.13	2000		51727	GoodLight	40 LED Bulb	40 Watts	8.00 Metres	Galvanised Steel	
Y	14	STREET LIGHTING	KINGS ROAD	CLEETHORPES	531503	407727	2000		51728	GoodLight	40 LED Bulb	40 Watts	8.00 Metres	Galvanised Steel	
Y	15	STREET LIGHTING	KINGS ROAD	CLEETHORPES	531534	407706	2000		51729	GoodLight	40 LED Bulb	40 Watts	8.00 Metres	Galvanised Steel	
Y	16	STREET LIGHTING	KINGS ROAD	CLEETHORPES	531520.32	407686.64	2000		51730	GoodLight	40 LED Bulb	40 Watts	8.00 Metres	Galvanised Steel	
Y	17	STREET LIGHTING	KINGS ROAD	CLEETHORPES	531547.96	407674.51	2000		51731	GoodLight	40 LED Bulb	40 Watts	8.00 Metres	Galvanised Steel	
Y	18	STREET LIGHTING	KINGS ROAD	CLEETHORPES	531529.55	407663.82	2000		51732	GoodLight	40 LED Bulb	40 Watts	8.00 Metres	Galvanised Steel	
Y	19	STREET LIGHTING	KINGS ROAD	CLEETHORPES	531559.31	407642.57	2000		51733	GoodLight	40 LED Bulb	40 Watts	8.00 Metres	Galvanised Steel	
Y	20	STREET LIGHTING	KINGS ROAD	CLEETHORPES	531545.28	407636.48	2000		51734	GoodLight	40 LED Bulb	40 Watts	8.00 Metres	Galvanised Steel	
Y	21	STREET LIGHTING	KINGS ROAD	CLEETHORPES	531572.12	407617.2	2000		51735	GoodLight	40 LED Bulb	40 Watts	8.00 Metres	Galvanised Steel	
Y	22	STREET LIGHTING	KINGS ROAD	CLEETHORPES	531551.89	407606.04	2000		51736	GoodLight	40 LED Bulb	40 Watts	8.00 Metres	Galvanised Steel	
Y	23	STREET LIGHTING	KINGS ROAD	CLEETHORPES	531585.67	407593.13	2000		51737	GoodLight	40 LED Bulb	40 Watts	8.00 Metres	Galvanised Steel	
Y	24	STREET LIGHTING	KINGS ROAD	CLEETHORPES	531561.59	407581.24	2000		51738	GoodLight	40 LED Bulb	40 Watts	8.00 Metres	Galvanised Steel	
Y	25	STREET LIGHTING	KINGS ROAD	CLEETHORPES	531595.85	407577.35	2000		51739	GoodLight	40 LED Bulb	40 Watts	8.00 Metres	Galvanised Steel	
Y	26	STREET LIGHTING	KINGS ROAD	CLEETHORPES	531605.54	407563.07	2000		51740	GoodLight	40 LED Bulb	40 Watts	8.00 Metres	Galvanised Steel	
Y	27	STREET LIGHTING	KINGS ROAD	CLEETHORPES	531582.47	407549.47	2000		51741	GoodLight	40 LED Bulb	40 Watts	8.00 Metres	Galvanised Steel	
Y	28	STREET LIGHTING	KINGS ROAD	CLEETHORPES	531621.46	407540.02	2000		51742	GoodLight	40 LED Bulb	40 Watts	8.00 Metres	Galvanised Steel	
Y	29	STREET LIGHTING	KINGS ROAD	CLEETHORPES	531604.83	407524.42	2000		51743	GoodLight	40 LED Bulb	40 Watts	8.00 Metres	Galvanised Steel	
Y	30	STREET LIGHTING	KINGS ROAD	CLEETHORPES	531639.81	407518.73	2000		51744	GoodLight	40 LED Bulb	40 Watts	8.00 Metres	Galvanised Steel	
Y	31	STREET LIGHTING	KINGS ROAD	CLEETHORPES	531625.25	407505.05	2000		51745	GoodLight	40 LED Bulb	40 Watts	8.00 Metres	Galvanised Steel	
Y	32	STREET LIGHTING	KINGS ROAD	CLEETHORPES	531662.84	407492.76	2000		51746	GoodLight	40 LED Bulb	40 Watts	8.00 Metres	Galvanised Steel	
Y	33	STREET LIGHTING	KINGS ROAD	CLEETHORPES	531648.24	407479.58	2000		51747	GoodLight	40 LED Bulb	40 Watts	8.00 Metres	Galvanised Steel	
Y	34	STREET LIGHTING	KINGS ROAD	CLEETHORPES	531680.61	407472.71	1985		51748	1 Urbis LED	Teceo 40 LED 500mA	64 Watts	8.00 Metres	Galvanised Steel	
Y	35	STREET LIGHTING	KINGS ROAD	CLEETHORPES	531669.11	407455.34	1985		51749	1 Urbis LED	Teceo 40 LED 500mA	64 Watts	8.00 Metres	Galvanised Steel	
Y	36	STREET LIGHTING	KINGS ROAD	CLEETHORPES	531704.53	407437.4	1985		51750	1 Urbis LED	Teceo 48 LED 700mA	104 Watts	8.00 Metres	Galvanised Steel	
Y	37	STREET LIGHTING	KINGS ROAD	CLEETHORPES	531688.37	407427.92	1985		51751	1 Urbis LED	Teceo 40 LED 500mA	64 Watts	8.00 Metres	Galvanised Steel	
Y	38	STREET LIGHTING	KINGS ROAD	CLEETHORPES	531737.69	407352.93	2024	20/05/2024	51752	Urbis	Teceo 40 LED 500mA	64 Watts	8.00 Metres	Galvanised Steel	
Y	39	STREET LIGHTING	KINGS ROAD	CLEETHORPES	531729.02	407334.28	2020	16/10/2020	68133	Urbis	Teceo 40 LED 500mA	64 Watts	8.00 Metres	Galvanised Steel	
Y	40	STREET LIGHTING	KINGS ROAD	CLEETHORPES	531740.48	407309.65	1985		51754	1 Urbis LED	Teceo 40 LED 500mA	64 Watts	8.00 Metres	Galvanised Steel	
Y	41	STREET LIGHTING	KINGS ROAD	CLEETHORPES	531753.98	407283.64	1985		51755	1 Urbis LED	Teceo 40 LED 500mA	64 Watts	8.00 Metres	Galvanised Steel	
Y	42	STREET LIGHTING	KINGS ROAD	CLEETHORPES	531786.32	407227.02	1985		51756	1 Urbis LED	Teceo 40 LED 500mA	64 Watts	8.00 Metres	Galvanised Steel	
Y	43	STREET LIGHTING	KINGS ROAD	CLEETHORPES	531804.04	407198.98	1985		51757	Urbis	AXIA 3.3 48 LED 540mA	78 Watts	8.00 Metres	Galvanised Steel	
Y	44	STREET LIGHTING	KINGS ROAD	CLEETHORPES	531821.13	407173.16	1985		51758	1 Urbis LED	Teceo 40 LED 500mA	64 Watts	8.00 Metres	Galvanised Steel	
Y	45	STREET LIGHTING	KINGS ROAD	CLEETHORPES	531838.6	407148.04	1985		51759	1 Urbis LED	Teceo 40 LED 500mA	64 Watts	8.00 Metres	Galvanised Steel	
Y	46	STREET LIGHTING	KINGS ROAD	CLEETHORPES	531864	407131	1985		51760	1 Urbis LED	Teceo 40 LED 500mA	64 Watts	8.00 Metres	Galvanised Steel	
Y	47	STREET LIGHTING	KINGS ROAD	CLEETHORPES	531875.43	407101.52	1985		51761	1 Urbis LED	Teceo 40 LED 500mA	64 Watts	8.00 Metres	Galvanised Steel	
Y	48	STREET LIGHTING	KINGS ROAD	CLEETHORPES	531894.29	407079.05	1985		51762	1 Urbis LED	Teceo 40 LED 500mA	64 Watts	8.00 Metres	Galvanised Steel	
Y	49	STREET LIGHTING	KINGS ROAD	CLEETHORPES	531913.28	407057.85	1985		51763	1 Urbis LED	Teceo 40 LED 500mA	64 Watts	8.00 Metres	Galvanised Steel	
Y	50	STREET LIGHTING	KINGS ROAD	CLEETHORPES	531934.16	407035.51	1985		51764	1 Urbis LED	Teceo 40 LED 500mA	64 Watts	8.00 Metres	Galvanised Steel	
Y	51	STREET LIGHTING	KINGS ROAD	CLEETHORPES	531952.65	407018.74	1985		51765	1 Urbis LED	Teceo 40 LED 500mA	64 Watts	8.00 Metres	Galvanised Steel	
Y	52	STREET LIGHTING	KINGS ROAD	CLEETHORPES	531973.4	407000.32	1985		51766	1 Urbis LED	Teceo 40 LED 500mA	64 Watts	8.00 Metres	Galvanised Steel	
Y	53	STREET LIGHTING	KINGS ROAD	CLEETHORPES	531991.48	407002.87	1985		51767	1 Urbis LED	Teceo 40 LED 500mA	64 Watts	8.00 Metres	Galvanised Steel	
Y	54	STREET LIGHTING	KINGS ROAD	CLEETHORPES	532017.56	406986.48	1985		51768	1 Urbis LED	Teceo 40 LED 500mA	64 Watts	8.00 Metres	Galvanised Steel	
Y	55	STREET LIGHTING	KINGS ROAD	CLEETHORPES	532042.12	406969.58	1985		51769	1 Urbis LED	Teceo 40 LED 500mA	64 Watts	8.00 Metres	Galvanised Steel	
Y	56	STREET LIGHTING	KINGS ROAD	CLEETHORPES	532065.91	406949.9	1985		51770	1 Urbis LED	Teceo 40 LED 500mA	64 Watts	8.00 Metres	Galvanised Steel	
Y	57	STREET LIGHTING	KINGS ROAD	CLEETHORPES	532081.99	406931.99	1985		51771	1 Urbis LED	Teceo 40 LED 500mA	64 Watts	8.00 Metres	Galvanised Steel	
Y	58	STREET LIGHTING	KINGS ROAD	CLEETHORPES	532098.32	406909.9	1985		51772	1 Urbis LED	Teceo 40 LED 500mA	64 Watts	8.00 Metres	Galvanised Steel	
Y	59	STREET LIGHTING	KINGS ROAD	CLEETHORPES	532112.12	406885.03	1985		51773	1 Urbis LED	Teceo 40 LED 500mA	64 Watts	8.00 Metres	Galvanised Steel	
Y	60	STREET LIGHTING	KINGS ROAD	CLEETHORPES	532122.75	406859.08	2014		51774	Urbis	AXIA 3.3 48 LED 540mA	78 Watts	8.00 Metres	Galvanised Steel	
Y	61	STREET LIGHTING	KINGS ROAD	CLEETHORPES	532130.85	406829.91	1985		51775	1 Urbis LED	Teceo 40 LED 500mA	64 Watts	8.00 Metres	Galvanised Steel	
Y	62	STREET LIGHTING	KINGS ROAD	CLEETHORPES	532135.86	406802.37	1985		51776	1 Urbis LED	Teceo 40 LED 500mA	64 Watts	8.00 Metres	Galvanised Steel	
Y	63	STREET LIGHTING	KINGS ROAD	CLEETHORPES	532136.12	406774.67	1985		51777	1 Urbis LED	Teceo 40 LED 500mA	64 Watts	8.00 Metres	Galvanised Steel	
Y	64	STREET LIGHTING	KINGS ROAD	CLEETHORPES	532124.47	406756.54	1985		51778	1 Urbis LED	Teceo 40 LED 500mA	64 Watts	8.00 Metres	Galvanised Steel	
Y	65	STREET LIGHTING	KINGS ROAD	CLEETHORPES	532127.06	406724.56	1985		51779	1 Urbis LED	Teceo 40 LED 500mA	64 Watts	8.00 Metres	Galvanised Steel	
Y	66	STREET LIGHTING	KINGS ROAD	CLEETHORPES	532133.26	406695.84	1985		51780	1 Urbis LED	Teceo 40 LED 500mA	64 Watts	8.00 Metres	Galvanised Steel	
Y	67	STREET LIGHTING	KINGS ROAD	CLEETHORPES	532143.51	406665.18	1985		51781	1 Urbis LED	Teceo 40 LED 500mA	64 Watts	8.00 Metres	Galvanised Steel	
Y	68	STREET LIGHTING	KINGS ROAD	CLEETHORPES	532154.52	406634.1	1985		51782	1 Urbis LED	Teceo 40 LED 500mA	64 Watts	8.00 Metres	Galvanised Steel	
Y	69	STREET LIGHTING	KINGS ROAD	CLEETHORPES	532165.33	406603.48	1985		51783	1 Urbis LED	Teceo 40 LED 500mA	64 Watts	8.00 Metres	Galvanised Steel	
Y	70	STREET LIGHTING	KINGS ROAD	CLEETHORPES	532178.09	406565.74	1985		51784	1 Urbis LED	Teceo 40 LED 500mA	64 Watts	8.00 Metres	Galvanised Steel	
Y	71	STREET LIGHTING	KINGS ROAD	CLEETHORPES	532187.41	406541.54	1985		51785	1 Urbis LED	Teceo 40 LED 500mA	64 Watts	8.00 Metres	Galvanised Steel	
Y	72	STREET LIGHTING	KINGS ROAD	CLEETHORPES	532198.8	406509.91	1985		51786	1 Urbis LED	Teceo 40 LED 500mA	64 Watts	8.00 Metres	Galvanised Steel	
Y	73	STREET LIGHTING	KINGS ROAD	CLEETHORPES	532211.08	406478.08	1985		51787	1 Urbis LED	Teceo 40 LED 500mA	64 Watts	8.00 Metres	Galvanised Steel	
Y	74	STREET LIGHTING	KINGS ROAD	CLEETHORPES	532223.74	406447.41	1985		51788	1 Urbis LED	Teceo 40 LED 500mA	64 Watts	8.00 Metres	Galvanised Steel	
Y	75	STREET LIGHTING	KINGS ROAD	CLEETHORPES	532236.52	406419.92	1985		51789	1 Urbis LED	Teceo 40 LED 500mA	64 Watts	8.00 Metres	Galvanised Steel	
Y	76	STREET LIGHTING	KINGS ROAD	CLEETHORPES	532250.58	406391.94	1985		51790	Urbis	AXIA 3.3 48 LED 540mA	78 Watts	8.00 Metres	Galvanised Steel	
Y	77	STREET LIGHTING	KINGS ROAD	CLEETHORPES	532277.41	406369.35	1985		51791	1 Urbis LED	Teceo 40 LED 500mA	64 Watts	8.00 Metres	Galvanised Steel	
Y	78	STREET LIGHTING	KINGS ROAD	CLEETHORPES	532274.58	406347.01	1985		51792	1 Urbis LED	Teceo 40 LED 500mA	64 Watts	8.00 Metres	Galvanised Steel	
Y	1	STREET LIGHTING	PIER GARDENS	CLEETHORPES	530758.55	408849.9	1998		55442	Urbis	Axia 16 LED 350mA	19 Watts	5.00 Metres	Steel	
Y	2	STREET LIGHTING	PIER GARDENS	CLEETHORPES	530774.5	408829.97	1998		55443	Urbis	Axia 16 LED 350mA	19 Watts	5.00 Metres	Steel	
Y	3	STREET LIGHTING	PIER GARDENS	CLEETHORPES	530791.46	408805.67	1998		55444	Urbis	Axia 16 LED 350mA	19 Watts	5.00 Metres	Steel	
Y	4	STREET LIGHTING	PIER GARDENS	CLEETHORPES	530816.65	408781.87	1998		55445	Urbis	Axia 16 LED 350mA	19 Watts	5.00 Metres	Steel	
Y	5	STREET LIGHTING	PIER GARDENS	CLEETHORPES	530836.07	408749.2	1998		55446	Urbis	Axia 16 LED 350mA	19 Watts	5.00 Metres	Steel	
Y	6	STREET LIGHTING	PIER GARDENS	CLEETHORPES	530860	408714.9	1998		55447	Urbis	Axia 16 LED 350mA	19 Watts	5.00 Metres	Steel	
Y	7	STREET LIGHTING	PIER GARDENS	CLEETHORPES	530878.73	408691.04	1998		55448	Urbis	Axia 16 LED 350mA	19 Watts	5.00 Metres	Steel	
Y	8	STREET LIGHTING	PIER GARDENS	CLEETHORPES	530904.17	408666.61	1998		55449	Urbis	Axia 16 LED 350mA	19 Watts	5.00 Metres	Steel	
Y	9	STREET LIGHTING	PIER GARDENS	CLEETHORPES	530933.03	408641.61	1998		55450	Urbis	Axia 16 LED 350mA	19 Watts	5.00 Metres	Steel	
Y	10	STREET LIGHTING	PIER GARDENS	CLEETHORPES	530962.68	408621.29	1998		55451	Urbis	Axia 16 LED 350mA	19 Watts	6.00 Metres	Steel	
Y	11	STREET LIGHTING	PIER GARDENS	CLEETHORPES	530948.55	408639.37	1998		55452	Urbis	Axia 16 LED 350mA	19 Watts	6.00 Metres	Steel	
Y	12	STREET LIGHTING	PIER GARDENS	CLEETHORPES	530908.33	408696.16	1998		55453	Urbis	Axia 16 LED 350mA	19 Watts	6.00 Metres	Steel	
Y	13	STREET LIGHTING	PIER GARDENS	CLEETHORPES	530898.96	408708.56	1998		55454	Urbis	Axia 16 LED 350mA	19 Watts	6.00 Metres	Steel	
Y	14	STREET LIGHTING	PIER GARDENS	CLEETHORPES	530832.91	408792.74	1998		55455	Urbis	Axia 16 LED 350mA	19 Watts	6.00 Metres	Steel	
Y	1	STREET LIGHTING	KINGS PARADE	CLEETHORPES	531417.59	408004.75	1951		51705	DW Windsor	Warwick 15 LED	30 Watts	4.00 Metres	Cast Iron	
Y	2	STREET LIGHTING	KINGS PARADE	CLEETHORPES	531376.68	408058.85	1951		51706	DW Windsor	Warwick 15 LED	30 Watts	4.00 Metres	Cast Iron	
Y	3	STREET LIGHTING	KINGS PARADE	CLEETHORPES	531331.31	408117.25	1951		51707	DW Windsor	Warwick 15 LED	30 Watts	4.00 Metres	Cast Iron	
Y	4	STREET LIGHTING	KINGS PARADE	CLEETHORPES	531286.1	408175.62	1951		51708	DW Windsor	Warwick 15 LED	30 Watts	4.00 Metres	Cast Iron	
Y	5	STREET LIGHTING	KINGS PARADE	CLEETHORPES	531240.91	408240.24	1951		51709	DW Windsor	Warwick 15 LED	30 Watts	4.00 Metres	Cast Iron	
Y	6	STREET LIGHTING	KINGS PARADE	CLEETHORPES	531196.86	408304.92	1951		51710	DW Windsor	Warwick 15 LED	30 Watts	4.00 Metres	Cast Iron	
Y	7	STREET LIGHTING	KINGS PARADE	CLEETHORPES	531161.11	408357.48	1951		51711	DW Windsor	Warwick 15 LED	30 Watts	4.00 Metres	Cast Iron	
Y	8	STREET LIGHTING	KINGS PARADE	CLEETHORPES	531120.15	408417.53	1951		51712	DW Windsor	Warwick 15 LED	30 Watts	4.00 Metres	Cast Iron	
Y	9	STREET LIGHTING	KINGS PARADE	CLEETHORPES	531086.23	408467.4	1951		51713	DW Windsor	Warwick 15 LED	30 Watts	4.00 Metres	Cast Iron	
Y	1	STREET LIGHTING	HEWITT'S AVENUE CYCLEWAY	NEW WALTHAM	529050.29	406168.06	1998		50630	Urbis	Axia 8 LED 350mA	10 Watts	5.00 Metres	Galvanised Steel	
Y	2	STREET LIGHTING	HEWITT'S AVENUE CYCLEWAY	NEW WALTHAM	529029.28	406155.97	1998		50631	Urbis	Axia 8 LED 350mA	10 Watts	5.00 Metres	Galvanised Steel	

Y	3	STREET LIGHTING	HEWITT'S AVENUE CYCLEWAY	NEW WALTHAM	529007.89	406144.64	1998		50632	Urbis	Axia 8 LED 350mA	10 Watts	5.00 Metres	Galvanised Steel	
Y	4	STREET LIGHTING	HEWITT'S AVENUE CYCLEWAY	NEW WALTHAM	528985.86	406134.83	1998		50633	Urbis	Axia 8 LED 350mA	10 Watts	5.00 Metres	Galvanised Steel	
Y	5	STREET LIGHTING	HEWITT'S AVENUE CYCLEWAY	NEW WALTHAM	528963.46	406125.78	1998		50634	Urbis	Axia 8 LED 350mA	10 Watts	5.00 Metres	Galvanised Steel	
Y	6	STREET LIGHTING	HEWITT'S AVENUE CYCLEWAY	NEW WALTHAM	528941.94	406114.83	1998		50635	Urbis	Axia 8 LED 350mA	10 Watts	5.00 Metres	Galvanised Steel	
Y	7	STREET LIGHTING	HEWITT'S AVENUE CYCLEWAY	NEW WALTHAM	528920.93	406102.99	1998		50636	Urbis	Axia 8 LED 350mA	10 Watts	5.00 Metres	Galvanised Steel	
Y	8	STREET LIGHTING	HEWITT'S AVENUE CYCLEWAY	NEW WALTHAM	528900.55	406090.14	1998		50637	Urbis	Axia 8 LED 350mA	10 Watts	5.00 Metres	Galvanised Steel	
Y	9	STREET LIGHTING	HEWITT'S AVENUE CYCLEWAY	NEW WALTHAM	528881.18	406076.03	1998		50638	Urbis	Axia 8 LED 350mA	10 Watts	5.00 Metres	Galvanised Steel	
Y	10	STREET LIGHTING	HEWITT'S AVENUE CYCLEWAY	NEW WALTHAM	528862.32	406061.16	1998		50639	Urbis	Axia 8 LED 350mA	10 Watts	5.00 Metres	Galvanised Steel	
Y	11	STREET LIGHTING	HEWITT'S AVENUE CYCLEWAY	NEW WALTHAM	528845.23	406044.26	1998		50640	Urbis	Axia 16 LED 350mA	19 Watts	5.00 Metres	Galvanised Steel	
Y	12	STREET LIGHTING	HEWITT'S AVENUE CYCLEWAY	NEW WALTHAM	528830.14	406026.75	1998		50641	Urbis	Axia 16 LED 350mA	19 Watts	5.00 Metres	Galvanised Steel	
Y	1	STREET LIGHTING	LOUTH ROAD (CUL DE SAC)	NEW WALTHAM	527479.46	404904.02	1998		52903	1 Urbis LED	Axia 16 LED 500mA	28 Watts	8.00 Metres	Galvanised Steel	
Y	2	STREET LIGHTING	LOUTH ROAD (CUL DE SAC)	NEW WALTHAM	527546.29	404768.15	1998		52904	1 Urbis LED	Axia 16 LED 500mA	28 Watts	6.00 Metres	Galvanised Steel	
Y	1	STREET LIGHTING	HEWITT'S AVENUE (CUL DE SAC)	NEW WALTHAM	528824.47	406011.26	1998		50628	1 Urbis LED	Axia 16 LED 500mA	28 Watts	8.00 Metres	Galvanised Steel	
Y	2	STREET LIGHTING	HEWITT'S AVENUE (CUL DE SAC)	NEW WALTHAM	528882.74	406052.82	1998		50629	1 Urbis LED	Axia 16 LED 500mA	28 Watts	8.00 Metres	Galvanised Steel	
Y	92	STREET LIGHTING	PEAKS PARKWAY FROM PEAKS FARM	NEW WALTHAM	527857.64	407010.9	1997		54988	1 Urbis LED	Teceo 48 LED 700mA	104 Watts	10.00 Metres	Galvanised Steel	
Y	93	STREET LIGHTING	PEAKS PARKWAY FROM PEAKS FARM	NEW WALTHAM	527865.28	406981.24	1997		54989	1 Urbis LED	Teceo 48 LED 700mA	104 Watts	10.00 Metres	Galvanised Steel	
Y	94	STREET LIGHTING	PEAKS PARKWAY FROM PEAKS FARM	NEW WALTHAM	527870.97	406960.55	1997		54990	1 Urbis LED	Teceo 48 LED 700mA	104 Watts	10.00 Metres	Galvanised Steel	
Y	95	STREET LIGHTING	PEAKS PARKWAY FROM PEAKS FARM	NEW WALTHAM	527879.76	406930.5	2007		54991	1 Urbis LED	Teceo 48 LED 700mA	104 Watts	10.00 Metres	Steel	
Y	96	STREET LIGHTING	PEAKS PARKWAY FROM PEAKS FARM	NEW WALTHAM	527872.67	406896.27	2002		54992	1 Urbis LED	Teceo 48 LED 700mA	104 Watts	10.00 Metres	Stainless Steel	
Y	97	STREET LIGHTING	PEAKS PARKWAY FROM PEAKS FARM	NEW WALTHAM	527880.98	406867.21	2020	23/01/2020	67719	Urbis	Teceo 48 LED 700mA	104 Watts	12.00 Metres	Galvanised Steel	
Y	98	STREET LIGHTING	PEAKS PARKWAY FROM PEAKS FARM	NEW WALTHAM	527889.48	406837.94	2020	08/04/2020	67720	Urbis	Teceo 48 LED 700mA	104 Watts	12.00 Metres	Galvanised Steel	
Y	99	STREET LIGHTING	PEAKS PARKWAY FROM PEAKS FARM	NEW WALTHAM	527912.37	406814.15	1997		54995	Urbis	Ampera 48 LED 700mA	104 Watts	10.00 Metres	Galvanised Steel	
Y	100	STREET LIGHTING	PEAKS PARKWAY FROM PEAKS FARM	NEW WALTHAM	527905.69	406778.8	1997		54996	1 Urbis LED	Teceo 48 LED 700mA	104 Watts	10.00 Metres	Steel	
Y	101	STREET LIGHTING	PEAKS PARKWAY FROM PEAKS FARM	NEW WALTHAM	527913.79	406749.54	1997		54997	1 Urbis LED	Teceo 48 LED 700mA	104 Watts	10.00 Metres	Galvanised Steel	
Y	102	STREET LIGHTING	PEAKS PARKWAY FROM PEAKS FARM	NEW WALTHAM	527921.89	406720.48	1997		54998	1 Urbis LED	Teceo 48 LED 700mA	104 Watts	10.00 Metres	Galvanised Steel	
Y	103	STREET LIGHTING	PEAKS PARKWAY FROM PEAKS FARM	NEW WALTHAM	527929.99	406691.01	1997		54999	1 Urbis LED	Teceo 48 LED 700mA	104 Watts	10.00 Metres	Galvanised Steel	
Y	104	STREET LIGHTING	PEAKS PARKWAY FROM PEAKS FARM	NEW WALTHAM	527937.89	406661.54	1997		55000	1 Urbis LED	Teceo 48 LED 700mA	104 Watts	10.00 Metres	Galvanised Steel	
Y	105	STREET LIGHTING	PEAKS PARKWAY FROM PEAKS FARM	NEW WALTHAM	527946.4	406631.87	1997		55001	1 Urbis LED	Teceo 48 LED 700mA	104 Watts	10.00 Metres	Galvanised Steel	
Y	106	STREET LIGHTING	PEAKS PARKWAY FROM PEAKS FARM	NEW WALTHAM	527954.7	406602	1997		55002	1 Urbis LED	Teceo 48 LED 700mA	104 Watts	10.00 Metres	Galvanised Steel	
Y	107	STREET LIGHTING	PEAKS PARKWAY FROM PEAKS FARM	NEW WALTHAM	527962.6	406573.14	1997		55003	1 Urbis LED	Teceo 48 LED 700mA	104 Watts	10.00 Metres	Galvanised Steel	
Y	108	STREET LIGHTING	PEAKS PARKWAY FROM PEAKS FARM	NEW WALTHAM	527970.71	406543.87	1997		55004	1 Urbis LED	Teceo 48 LED 700mA	104 Watts	10.00 Metres	Galvanised Steel	
Y	109	STREET LIGHTING	PEAKS PARKWAY FROM PEAKS FARM	NEW WALTHAM	527978.81	406514.4	1997		55005	1 Urbis LED	Teceo 48 LED 700mA	104 Watts	10.00 Metres	Galvanised Steel	
Y	110	STREET LIGHTING	PEAKS PARKWAY FROM PEAKS FARM	NEW WALTHAM	527986.5	406485.14	1997		55006	1 Urbis LED	Teceo 48 LED 700mA	104 Watts	10.00 Metres	Galvanised Steel	
Y	111	STREET LIGHTING	PEAKS PARKWAY FROM PEAKS FARM	NEW WALTHAM	527994.4	406455.47	1997		55007	1 Urbis LED	Teceo 48 LED 700mA	104 Watts	10.00 Metres	Galvanised Steel	
Y	112	STREET LIGHTING	PEAKS PARKWAY FROM PEAKS FARM	NEW WALTHAM	528002.5	406426.41	2010		55008	1 Urbis LED	Teceo 48 LED 700mA	104 Watts	10.00 Metres	Steel	
Y	113	STREET LIGHTING	PEAKS PARKWAY FROM PEAKS FARM	NEW WALTHAM	528010.81	406396.33	1997		55009	1 Urbis LED	Teceo 48 LED 700mA	104 Watts	10.00 Metres	Galvanised Steel	
Y	114	STREET LIGHTING	PEAKS PARKWAY FROM PEAKS FARM	NEW WALTHAM	528018.71	406367.27	1997		55010	1 Urbis LED	Teceo 48 LED 700mA	104 Watts	10.00 Metres	Galvanised Steel	
Y	115	STREET LIGHTING	PEAKS PARKWAY FROM PEAKS FARM	NEW WALTHAM	528027.22	406338	1997		55011	1 Urbis LED	Teceo 48 LED 700mA	104 Watts	10.00 Metres	Galvanised Steel	
Y	116	STREET LIGHTING	PEAKS PARKWAY FROM PEAKS FARM	NEW WALTHAM	528034.91	406308.94	1997		55012	1 Urbis LED	Teceo 48 LED 700mA	104 Watts	10.00 Metres	Galvanised Steel	
Y	117	STREET LIGHTING	PEAKS PARKWAY FROM PEAKS FARM	NEW WALTHAM	528043.42	406279.68	1997		55013	1 Urbis LED	Teceo 48 LED 700mA	104 Watts	10.00 Metres	Galvanised Steel	
Y	118	STREET LIGHTING	PEAKS PARKWAY FROM PEAKS FARM	NEW WALTHAM	528051.32	406251.02	1997		55014	1 Urbis LED	Teceo 48 LED 700mA	104 Watts	10.00 Metres	Galvanised Steel	
Y	119	STREET LIGHTING	PEAKS PARKWAY FROM PEAKS FARM	NEW WALTHAM	528059.62	406221.35	1997		55015	1 Urbis LED	Teceo 48 LED 700mA	104 Watts	10.00 Metres	Galvanised Steel	
Y	120	STREET LIGHTING	PEAKS PARKWAY FROM PEAKS FARM	NEW WALTHAM	528067.93	406191.88	1997		55016	1 Urbis LED	Teceo 48 LED 700mA	104 Watts	10.00 Metres	Galvanised Steel	
Y	121	STREET LIGHTING	PEAKS PARKWAY FROM PEAKS FARM	NEW WALTHAM	528075.83	406163.43	1997		55017	1 Urbis LED	Teceo 48 LED 700mA	104 Watts	10.00 Metres	Galvanised Steel	
Y	122	STREET LIGHTING	PEAKS PARKWAY FROM PEAKS FARM	NEW WALTHAM	528083.93	406133.55	1997		55018	1 Urbis LED	Teceo 48 LED 700mA	104 Watts	10.00 Metres	Galvanised Steel	
Y	123	STREET LIGHTING	PEAKS PARKWAY FROM PEAKS FARM	NEW WALTHAM	528091.83	406104.09	1997		55019	1 Urbis LED	Teceo 48 LED 700mA	104 Watts	10.00 Metres	Galvanised Steel	
Y	124	STREET LIGHTING	PEAKS PARKWAY FROM PEAKS FARM	NEW WALTHAM	528100.13	406075.43	1997		55020	1 Urbis LED	Teceo 48 LED 700mA	104 Watts	10.00 Metres	Galvanised Steel	
Y	125	STREET LIGHTING	PEAKS PARKWAY FROM PEAKS FARM	NEW WALTHAM	528121.6	406049.81	1997		55021	1 Urbis LED	Teceo 48 LED 700mA	104 Watts	10.00 Metres	Galvanised Steel	
Y	126	STREET LIGHTING	PEAKS PARKWAY FROM PEAKS FARM	NEW WALTHAM	528129.5	406020.95	1997		55022	1 Urbis LED	Teceo 48 LED 700mA	104 Watts	10.00 Metres	Galvanised Steel	
Y	127	STREET LIGHTING	PEAKS PARKWAY FROM PEAKS FARM	NEW WALTHAM	528136.79	405991.89	1997		55023	1 Urbis LED	Teceo 48 LED 700mA	104 Watts	10.00 Metres	Galvanised Steel	
Y	128	STREET LIGHTING	PEAKS PARKWAY FROM PEAKS FARM	NEW WALTHAM	528145.09	405963.63	1997		55024	1 Urbis LED	Teceo 48 LED 700mA	104 Watts	10.00 Metres	Galvanised Steel	
Y	129	STREET LIGHTING	PEAKS PARKWAY FROM PEAKS FARM	NEW WALTHAM	528153.19	405934.77	1997		55025	1 Urbis LED	Teceo 48 LED 700mA	104 Watts	10.00 Metres	Galvanised Steel	
Y	130	STREET LIGHTING	PEAKS PARKWAY FROM PEAKS FARM	NEW WALTHAM	528160.89	405906.12	1997		55026	1 Urbis LED	Teceo 48 LED 700mA	104 Watts	10.00 Metres	Galvanised Steel	
Y	131	STREET LIGHTING	PEAKS PARKWAY FROM PEAKS FARM	NEW WALTHAM	528168.99	405877.05	1997		55027	1 Urbis LED	Teceo 48 LED 700mA	104 Watts	10.00 Metres	Galvanised Steel	
Y	132	STREET LIGHTING	PEAKS PARKWAY FROM PEAKS FARM	NEW WALTHAM	528176.49	405847.59	1997		55028	1 Urbis LED	Teceo 48 LED 700mA	104 Watts	10.00 Metres	Galvanised Steel	
Y	133	STREET LIGHTING	PEAKS PARKWAY FROM PEAKS FARM	NEW WALTHAM	528184.79	405822.78	1997		55029	1 Urbis LED	Teceo 48 LED 700mA	104 Watts	10.00 Metres	Galvanised Steel	
Y	134	STREET LIGHTING	PEAKS PARKWAY FROM PEAKS FARM	NEW WALTHAM	528166.36	405818.52	2020	08/04/2020	55030	1 Urbis LED	Teceo 48 LED 700mA	104 Watts	10.00 Metres	Galvanised Steel	
Y	135	STREET LIGHTING	PEAKS PARKWAY FROM PEAKS FARM	NEW WALTHAM			2016	07/12/2016	68977	1 Urbis LED	Teceo 48 LED 700mA	104 Watts	10.00 Metres	Galvanised Steel	
Y	136	STREET LIGHTING	PEAKS PARKWAY FROM PEAKS FARM	NEW WALTHAM	528179.06	405732.09	1997		55032	1 Urbis LED	Teceo 48 LED 700mA	104 Watts	10.00 Metres	Galvanised Steel	
Y	137	STREET LIGHTING	PEAKS PARKWAY FROM PEAKS FARM	NEW WALTHAM	528187.29	405700.64	1997		55033	1 Urbis LED	Teceo 48 LED 700mA	104 Watts	10.00 Metres	Galvanised Steel	
Y	138	STREET LIGHTING	PEAKS PARKWAY FROM PEAKS FARM	NEW WALTHAM	528167.24	405681.96	1997		55034	1 Urbis LED	Teceo 48 LED 700mA	104 Watts	10.00 Metres	Galvanised Steel	
Y	139	STREET LIGHTING	PEAKS PARKWAY FROM PEAKS FARM	NEW WALTHAM	528171.89	405651.9	1997		55035	1 Urbis LED	Teceo 48 LED 700mA	104 Watts	10.00 Metres	Galvanised Steel	
Y	140	STREET LIGHTING	PEAKS PARKWAY FROM PEAKS FARM	NEW WALTHAM	528149.41	405626.48	1997		55036	1 Urbis LED	Teceo 48 LED 700mA	104 Watts	10.00 Metres	Galvanised Steel	
Y	141	STREET LIGHTING	PEAKS PARKWAY FROM PEAKS FARM	NEW WALTHAM	528151.24	405597.36	1997		55037	1 Urbis LED	Teceo 48 LED 700mA	104 Watts	8.00 Metres	Galvanised Steel	
Y	142	STREET LIGHTING	PEAKS PARKWAY FROM PEAKS FARM	NEW WALTHAM	528138.48	405570.73	1997		55038	1 Urbis LED	Teceo 48 LED 700mA	104 Watts	10.00 Metres	Galvanised Steel	
Y	143	STREET LIGHTING	PEAKS PARKWAY FROM PEAKS FARM	NEW WALTHAM	528112.35	405550.37	1997		55039	1 Urbis LED	Teceo 48 LED 700mA	104 Watts	10.00 Metres	Galvanised Steel	
Y	144	STREET LIGHTING	PEAKS PARKWAY FROM PEAKS FARM	NEW WALTHAM	528108.91	405520.2	1997		55040	1 Urbis LED	Teceo 48 LED 700mA	104 Watts	10.00 Metres	Galvanised Steel	
Y	145	STREET LIGHTING	PEAKS PARKWAY FROM PEAKS FARM	NEW WALTHAM	528082.18	405503.89	1997		55041	1 Urbis LED	Teceo 48 LED 700mA	104 Watts	10.00 Metres	Galvanised Steel	
Y	146	STREET LIGHTING	PEAKS PARKWAY FROM PEAKS FARM	NEW WALTHAM	528074.48	405473.56	1997		55042	1 Urbis LED	Teceo 48 LED 700mA	104 Watts	10.00 Metres	Galvanised Steel	
Y	147	STREET LIGHTING	PEAKS PARKWAY FROM PEAKS FARM	NEW WALTHAM	528043.9	405458.67	1997		55043	1 Urbis LED	Teceo 48 LED 700mA	104 Watts	10.00 Metres	Galvanised Steel	
Y	148	STREET LIGHTING	PEAKS PARKWAY FROM PEAKS FARM	NEW WALTHAM	528032.92	405429.89	1997		55044	1 Urbis LED	Teceo 48 LED 700mA	104 Watts	10.00 Metres	Galvanised Steel	
Y	149	STREET LIGHTING	PEAKS PARKWAY FROM PEAKS FARM	NEW WALTHAM	528002.96	405419.89	1997		55045	1 Urbis LED	Teceo 48 LED 700mA	104 Watts	10.00 Metres	Galvanised Steel	
Y	150	STREET LIGHTING	PEAKS PARKWAY FROM PEAKS FARM	NEW WALTHAM	527989.91	405392.58	2021	06/09/2021	68440	Urbis	Teceo 48 LED 700mA	104 Watts	12.00 Metres	Galvanised Steel	
Y	151	STREET LIGHTING	PEAKS PARKWAY FROM PEAKS FARM	NEW WALTHAM	527958.33	405383.42	1997		55047	1 Urbis LED	Teceo 48 LED 700mA	104 Watts	10.00 Metres	Galvanised Steel	
Y	152	STREET LIGHTING	PEAKS PARKWAY FROM PEAKS FARM	NEW WALTHAM	527944.35	405355.78	2021	06/09/2021	68441	Urbis	Teceo 48 LED 700mA	104 Watts	12.00 Metres	Galvanised Steel	
Y	153	STREET LIGHTING	PEAKS PARKWAY FROM PEAKS FARM	NEW WALTHAM	527913.17	405347.17	1997		55049	1 Urbis LED	Teceo 48 LED 700mA	104 Watts	10.00 Metres	Galvanised Steel	
Y	154	STREET LIGHTING	PEAKS PARKWAY FROM PEAKS FARM	NEW WALTHAM	527898.38	405319.22	1997		55050	1 Urbis LED	Teceo 48 LED 700mA	104 Watts	10.00 Metres	Galvanised Steel	
Y	155	STREET LIGHTING	PEAKS PARKWAY FROM PEAKS FARM	NEW WALTHAM	527867.56	405311.08	1997		55051	1 Urbis LED	Teceo 48 LED 700mA	104 Watts	10.00 Metres	Galvanised Steel	
Y	156	STREET LIGHTING	PEAKS PARKWAY FROM PEAKS FARM	NEW WALTHAM	527854.76	405284.27	1997		55052	1 Urbis LED	Teceo 48 LED 700mA	104 Watts	10.00 Metres	Galvanised Steel	
Y	157	STREET LIGHTING	PEAKS PARKWAY FROM PEAKS FARM	NEW WALTHAM	527822.15	405275.35	1997		55053	1 Urbis LED	Teceo 48 LED 700mA	104 Watts	10.00 Metres	Galvanised Steel	
Y	158	STREET LIGHTING	PEAKS PARKWAY FROM PEAKS FARM	NEW WALTHAM	527808.38	405247.16	1997		55054	1 Urbis LED	Teceo 48 LED 700mA	104 Watts	10.00 Metres	Galvanised Steel	
Y	159	STREET LIGHTING	PEAKS PARKWAY FROM PEAKS FARM	NEW WALTHAM	527776.58	405239.37	1997		55055	1 Urbis LED	Teceo 48 LED 700mA	104 Watts	10.00 Metres	Galvanised Steel	
Y	160	STREET LIGHTING	PEAKS PARKWAY FROM PEAKS FARM	NEW WALTHAM	527763.98	405209.66	1997		55056	1 Urbis LED	Teceo 48 LED 700mA	104 Watts	10.00 Metres	Galvanised Steel	
Y	161	STREET LIGHTING	PEAKS PARKWAY FROM PEAKS FARM	NEW WALTHAM	527732.59	405198.82	1997		55057	1 Urbis LED	Teceo 48 LED 700mA	104 Watts	10.00 Metres	Galvanised Steel	
Y	162	STREET LIGHTING	PEAKS PARKWAY FROM PEAKS FARM	NEW WALTHAM	527722.38	405168.36	1997		55058	1 Urbis LED	Teceo 48 LED 700mA	104 Watts	10.00 Metres	Galvanised Steel	
Y	163	STREET LIGHTING	PEAKS PARKWAY FROM PEAKS FARM	NEW WALTHAM	527692.94	405154	1997		55059	1 Urbis LED	Teceo 48 LED 700mA	104 Watts	10.00 Metres	Galvanised Steel	
Y	164	STREET LIGHTING	PEAKS PARKWAY FROM PEAKS FARM	NEW WALTHAM	527687.27	405125.04	1997		55060	1 Urbis LED	Teceo 48 LED 700mA	104 Watts	10.00 Metres	Galvanised Steel	
Y	165	STREET LIGHTING	PEAKS PARKWAY FROM PEAKS FARM	NEW WALTHAM	527660.53	405107.66	1997		55061	1 Urbis LED	Teceo 48 LED 700mA	104 Watts	10.00 Metres	Galvanised Steel	
Y	166	STREET LIGHTING	PEAKS PARKWAY FROM PEAKS FARM	NEW WALTHAM	527657.5	405078.82	1997		55062	1 Urbis LED	Teceo 48 LED 700mA	104 Watts	10.00 Metres	Galvanised Steel	
Y	167	STREET LIGHTING	PEAKS PARKWAY FROM PEAKS FARM	NEW WALTHAM	527632.71	405056.97	1997		55063	1 Urbis LED	Teceo 48 LED 700mA	104 Watts	10.00 Metres	Galvanised Steel	
Y	168	STREET LIGHTING	PEAKS PARKWAY FROM PEAKS FARM	NEW WALTHAM	527633.72	405030.24	1997		55064	1 Urbis LED	Teceo 48 LED 700mA	104 Watts	10.00 Metres	Galvanised Steel	
Y	169	STREET LIGHTING	PEAKS PARKWAY FROM PEAKS FARM	NEW WALTHAM	527611.24	405006.65	1997		55065	1 Urbis LED	Teceo 48 LED 700mA	104 Watts	10.00 Metres	Galvanised Steel	
Y	170	STREET LIGHTING	PEAKS PARKWAY FROM PEAKS FARM	NEW WALTHAM	527615.18	404980.58	1997		55066	1 Urbis LED	Teceo 48 LED 700mA	104 Watts	10.00 Metres	Galvanised Steel	
Y	171	STREET LIGHTING	PEAKS PARKWAY FROM PEAKS FARM	NEW WALTHAM	527595.74	404953.95	1997		55067	1 Urbis LED	Ampera 48 LED 700mA	104 Watts	10.00 Metres	Galvanised Steel	
Y	172	STREET LIGHTING	PEAKS PARKWAY FROM PEAKS FARM	NEW WALTHAM	527602.83	404922.52	1997		55068	1 Urbis LED	Teceo 48 LED 700mA	104 Watts	10.00 Metres	Galvanised Steel	
Y	173	STREET LIGHTING	PEAKS PARKWAY FROM PEAKS FARM	NEW WALTHAM	527586.02	404927.58	1997		55069	1 Urbis LED	Teceo 48 LED 700mA	104 Watts	10.00 Metres	Galvanised Steel	
Y	1	STREET LIGHTING	STATION ROAD CYCLEWAY	NEW WALTHAM	528200.7	405727.03	1998		58379	Urbis	Axia 16 LED 350mA	19 Watts	6.00 Metres	Galvanised Steel	
Y	2	STREET LIGHTING	STATION ROAD CYCLEWAY	NEW WALTHAM	528208.17	405700.96	1998		58380	Urbis	Axia 16 LED 350mA	19 Watts	6.00 Metres	Galvanised Steel	
Y	3	STREET LIGHTING	STATION ROAD CYCLEWAY	NEW WALTHAM	528213.74	405678.66	1998		58381	Urbis	Axia 16 LED 350mA	19 Watts	6.00 Metres	Galvanised Steel	
Y	4	STREET LIGHTING	STATION ROAD CYCLEWAY	NEW WALTHAM	528219.69	405656.19	1998		58382	Urbis	Axia 16 LED 350mA	19 Watts	6.00 Metres	Galvanised Steel	
Y	5	STREET LIGHTING	STATION ROAD CYCLEWAY	NEW WALTHAM	528226.01	405633.89	1998		58383	Urbis	Axia 16 LED 350mA	19 Watts	6.00 Metres	Galvanised Steel	
Y	6	STREET LIGHTING	STATION ROAD CYCLEWAY	NEW WALTHAM	528232.47	405610.84	1998		58384	Urbis	Axia 16 LED 350mA	19 Watts	6.00 Metres	Galvanised Steel	
Y	7	STREET LIGHTING	STATION ROAD CYCLEWAY	NEW WALTHAM	528238.42	405588.24	1998		58385	Urbis	Axia 16 LED 350mA	19 Watts	6.00 Metres	Galvanised Steel	
Y	8	STREET LIGHTING	STATION ROAD CYCLEWAY	NEW WALTHAM	528244.62	405565.71	1998		58386	Urbis	Axia 16 LED 350mA	19 Watts	6.00 Metres	Galvanised Steel	
Y	9	STREET LIGHTING	STATION ROAD CYCLEWAY	NEW WALTHAM	528250.82	405543.24	1998		58387	Urbis	Axia 16 LED 350mA	19 Watts	6.00 Metres	Galvanised Steel	
Y	10	STREET LIGHTING	STATION ROAD CYCLEWAY	NEW WALTHAM	528257.02	405520.65	1998		58388	Urbis	Axia 16 LED 350mA	19 Watts	6.00 Metres	Galvanised Steel	
Y	11	STREET LIGHTING	STATION ROAD CYCLEWAY	NEW WALTHAM	528263.61	405498.31	1998		58389	Urbis	Axia 16 LED 350mA	19 Watts	6.00 Metres	Galvanised Steel	
Y	12	STREET LIGHTING	STATION ROAD CYCLEWAY	NEW WALTHAM	528269.3	405474.95	1998		58390	Urbis	Axia 16 LED 350mA	19 Watts	6.00 Metres	Galvanised Steel	
Y	13	STREET LIGHTING	STATION ROAD CYCLEWAY	NEW WALTHAM	528275.5	405452.36	1998		58391	Urbis	Axia 16 LED 350mA	19 Watts	6.00 Metres	Galvanised Steel	
Y	14	STREET LIGHTING	STATION ROAD CYCLEWAY	NEW WALTHAM	528281.71	405429.8	1998		58392	Urbis	Axia 16 LED 350mA	19 Watts	6.00 Metres	Galvanised Steel	

Y	15	STREET LIGHTING	STATION ROAD CYCLEWAY	NEW WALTHAM	528288.16	405407.33	1998		58393	Urbis	Axia 16 LED 350mA	19 Watts	6.00 Metres	Galvanised Steel	
Y	16	STREET LIGHTING	STATION ROAD CYCLEWAY	NEW WALTHAM	528294.49	405384.65	1998		58394	Urbis	Axia 16 LED 350mA	19 Watts	6.00 Metres	Galvanised Steel	
Y	17	STREET LIGHTING	STATION ROAD CYCLEWAY	NEW WALTHAM	528300.69	405362.22	1998		58395	Urbis	Axia 16 LED 350mA	19 Watts	6.00 Metres	Galvanised Steel	
Y	18	STREET LIGHTING	STATION ROAD CYCLEWAY	NEW WALTHAM	528307.27	405339.37	1998		58396	Urbis	Axia 16 LED 350mA	19 Watts	6.00 Metres	Galvanised Steel	
Y	19	STREET LIGHTING	STATION ROAD CYCLEWAY	NEW WALTHAM	528313.47	405316.78	1998		58397	Urbis	Axia 16 LED 350mA	19 Watts	6.00 Metres	Galvanised Steel	
Y	20	STREET LIGHTING	STATION ROAD CYCLEWAY	NEW WALTHAM	528319.93	405294.31	1998		58398	Urbis	Axia 16 LED 350mA	19 Watts	6.00 Metres	Galvanised Steel	
Y	21	STREET LIGHTING	STATION ROAD CYCLEWAY	NEW WALTHAM	528325.88	405271.84	1998		58399	Urbis	Axia 16 LED 350mA	19 Watts	6.00 Metres	Galvanised Steel	
Y	22	STREET LIGHTING	STATION ROAD CYCLEWAY	NEW WALTHAM	528332.08	405249.37	1998		58400	Urbis	Axia 16 LED 350mA	19 Watts	6.00 Metres	Galvanised Steel	
Y	23	STREET LIGHTING	STATION ROAD CYCLEWAY	NEW WALTHAM	528338.41	405227.16	1998		58401	Urbis	Axia 16 LED 350mA	19 Watts	6.00 Metres	Galvanised Steel	
Y	24	STREET LIGHTING	STATION ROAD CYCLEWAY	NEW WALTHAM	528344.48	405204.56	1998		58402	Urbis	Axia 16 LED 350mA	19 Watts	6.00 Metres	Galvanised Steel	
Y	25	STREET LIGHTING	STATION ROAD CYCLEWAY	NEW WALTHAM	528350.81	405182.03	1998		58403	Urbis	Axia 16 LED 350mA	19 Watts	6.00 Metres	Galvanised Steel	
Y	26	STREET LIGHTING	STATION ROAD CYCLEWAY	NEW WALTHAM	528357.14	405159.69	1998		58404	Urbis	Axia 16 LED 350mA	19 Watts	6.00 Metres	Galvanised Steel	
Y	27	STREET LIGHTING	STATION ROAD CYCLEWAY	NEW WALTHAM	528363.34	405137.1	1998		58405	Urbis	Axia 16 LED 350mA	19 Watts	6.00 Metres	Galvanised Steel	
Y	28	STREET LIGHTING	STATION ROAD CYCLEWAY	NEW WALTHAM	528369.8	405114.75	1998		58406	Urbis	Axia 16 LED 350mA	19 Watts	6.00 Metres	Galvanised Steel	
Y	29	STREET LIGHTING	STATION ROAD CYCLEWAY	NEW WALTHAM	528375.24	405094.31	1998		58407	Urbis	Axia 16 LED 350mA	19 Watts	6.00 Metres	Galvanised Steel	
Y	30	STREET LIGHTING	STATION ROAD CYCLEWAY	NEW WALTHAM	528381.44	405071.84	1998		58408	Urbis	Axia 16 LED 350mA	19 Watts	6.00 Metres	Galvanised Steel	
Y	31	STREET LIGHTING	STATION ROAD CYCLEWAY	NEW WALTHAM	528388.02	405048.11	1998		58409	Urbis	Axia 16 LED 350mA	19 Watts	6.00 Metres	Galvanised Steel	
Y	32	STREET LIGHTING	STATION ROAD CYCLEWAY	NEW WALTHAM	528394.23	405026.43	1998		58410	Urbis	Axia 16 LED 350mA	19 Watts	6.00 Metres	Galvanised Steel	
Y	33	STREET LIGHTING	STATION ROAD CYCLEWAY	NEW WALTHAM	528400.5	405004.14	1998		58411	Urbis	Axia 16 LED 350mA	19 Watts	6.00 Metres	Galvanised Steel	
Y	34	STREET LIGHTING	STATION ROAD CYCLEWAY	NEW WALTHAM	528406.45	404981.67	1998		58412	Urbis	Axia 16 LED 350mA	19 Watts	6.00 Metres	Galvanised Steel	
Y	35	STREET LIGHTING	STATION ROAD CYCLEWAY	NEW WALTHAM	528412.53	404959.66	1998		58413	Urbis	Axia 16 LED 350mA	19 Watts	6.00 Metres	Galvanised Steel	
Y	36	STREET LIGHTING	STATION ROAD CYCLEWAY	NEW WALTHAM	528418.85	404937.06	1998		58414	Urbis	Axia 16 LED 350mA	19 Watts	6.00 Metres	Galvanised Steel	
Y	37	STREET LIGHTING	STATION ROAD CYCLEWAY	NEW WALTHAM	528427.84	404915.86	1998		58415	Urbis	Axia 16 LED 350mA	19 Watts	6.00 Metres	Galvanised Steel	
Y	38	STREET LIGHTING	STATION ROAD CYCLEWAY	NEW WALTHAM	528435.94	404893.14	1998		58416	Urbis	Axia 16 LED 350mA	19 Watts	6.00 Metres	Galvanised Steel	
Y	39	STREET LIGHTING	STATION ROAD CYCLEWAY	NEW WALTHAM	528442.14	404870.8	1998		58417	Urbis	Axia 16 LED 350mA	19 Watts	6.00 Metres	Galvanised Steel	
Y	40	STREET LIGHTING	STATION ROAD CYCLEWAY	NEW WALTHAM	528448.47	404848.58	1998		58418	Urbis	Axia 16 LED 350mA	19 Watts	6.00 Metres	Galvanised Steel	
Y	41	STREET LIGHTING	STATION ROAD CYCLEWAY	NEW WALTHAM	528454.8	404826.37	1998		58419	Urbis	Axia 16 LED 350mA	19 Watts	6.00 Metres	Galvanised Steel	
Y	42	STREET LIGHTING	STATION ROAD CYCLEWAY	NEW WALTHAM	528461	404804.15	1998		58420	Urbis	Axia 16 LED 350mA	19 Watts	6.00 Metres	Galvanised Steel	
Y	43	STREET LIGHTING	STATION ROAD CYCLEWAY	NEW WALTHAM	528467.2	404781.56	1998		58421	Urbis	Axia 16 LED 350mA	19 Watts	6.00 Metres	Galvanised Steel	
Y	44	STREET LIGHTING	STATION ROAD CYCLEWAY	NEW WALTHAM	528473.53	404760.1	1998		58422	Urbis	Axia 16 LED 350mA	19 Watts	6.00 Metres	Galvanised Steel	
Y	2	STREET LIGHTING	MINI RAILWAY DEPOT	CLEETHORPES	532025.38	407134.44	1990		53743	Urbis	Axia 16 LED 350mA	19 Watts	6.00 Metres	Galvanised Steel	
Y	3	STREET LIGHTING	MINI RAILWAY DEPOT	CLEETHORPES	532044.12	407158.16	1990		53744	Urbis	Axia 16 LED 350mA	19 Watts	6.00 Metres	Galvanised Steel	
Y	4	STREET LIGHTING	MINI RAILWAY DEPOT	CLEETHORPES	532063.36	407181.96	1990		53745	Urbis	Axia 16 LED 350mA	19 Watts	6.00 Metres	Galvanised Steel	
Y	5	STREET LIGHTING	MINI RAILWAY DEPOT	CLEETHORPES	532081.89	407205.42	1990		53746	Urbis	Axia 16 LED 350mA	19 Watts	6.00 Metres	Galvanised Steel	
Y	6	STREET LIGHTING	MINI RAILWAY DEPOT	CLEETHORPES	532084.92	407235.9	1990		53747	Urbis	Axia 16 LED 350mA	19 Watts	6.00 Metres	Galvanised Steel	
Y	1	STREET LIGHTING	BOATING LAKE CAR PARK	CLEETHORPES	531519.19	407743.11	1987		61461	Philips		150 Watts	8.00 Metres	Galvanised Steel	
Y	1	STREET LIGHTING	BOATING LAKE CAR PARK	CLEETHORPES	531519.19	407743.11	1987		61993	Philips		150 Watts	8.00 Metres	Galvanised Steel	
Y	2	STREET LIGHTING	BOATING LAKE CAR PARK	CLEETHORPES	531535.66	407703.66	1987		61462	Philips		150 Watts	8.00 Metres	Galvanised Steel	
Y	2	STREET LIGHTING	BOATING LAKE CAR PARK	CLEETHORPES	531535.66	407703.66	1987		61994	Philips		150 Watts	8.00 Metres	Galvanised Steel	
Y	1	STREET LIGHTING	WESTSIDE ROAD	GRIMSBY DOCKS	526264.29	410696.38	2019	25/04/2019	67412	Urbis	Teceo 48 LED 500mA	79 Watts	10.00 Metres	Galvanised Steel	

Invitation to Tender

Section B – Scope Part B NLC

Framework for the Installation and Maintenance of Road Lighting, Traffic Signs and Bollards for North East and North Lincolnshire Councils

YORtender Reference: 100182

FTS Reference:

SCOPE & SCOPE APPENDICES

Preamble to the Scope

1. Tenderers should read this document in conjunction with the following documents listed below:

   ITT Section B - Part A Scope
   Appendix A – Background – NLC

2. The Scope referred to in the tender shall be the 'Specification for Highway Works', published by The Stationary Office (Formerly H.M.S.O) as Volume 1 of the Manual of Contract Documents for Highway Works.

APPENDIX 0/0 – PREAMBLE

The Specification for Highway Works shall be further modified and extended by:-

i. For the purpose of this document Supplier will be defined as Contractor and Client's Service Manager(s) will be defined as Engineer.

ii. Appendix 0/1: Contract-specific Additional, Substitute and Cancelled Clauses and Tables;

iii. The Numbered Appendices listed in Appendix 0/3;;

iv. Appendix 0/5: Special national alterations of the Overseeing Department of Scotland, Wales or Northern Ireland.

3. The relevant publication date of each page of the Specification for Highway Works is given in the Schedule of Pages for Relevant Publication Dates.

4. An Additional Clause, as indicated by a suffix 'A' in Appendix 0/5 is an alteration originating from the Overseeing Department of Scotland, Wales or Northern Ireland. An Additional Clause as indicated by the suffix 'AR' in Appendix 0/1 is a Contract-specific alteration.

5. A Substitute Clause, as indicated by suffix 'S' in Appendix 0.5 is an alteration originating from the Overseeing Department of Scotland, Wales or Northern Ireland. A Substitute Clause as indicated by the suffix 'SR' in Appendix 0/1 is a Contract-specific alteration.

6. A Cancelled Clause, as indicated by suffix 'C' in Appendix 0.5 is an alteration originating from the Overseeing Department of Scotland, Wales or Northern Ireland. A Cancelled Clause as indicated by the suffix 'CR' in Appendix 0/1 is a Contract-specific alteration.

7. Insofar as any of the Numbered Appendices may conflict or be inconsistent with any provision of the Specification for Highway Works the Numbered Appendices shall always prevail. Additionally, Numbered Appendices 0/1 and 0/2 shall take precedence over Numbered Appendix 0/5.

8. Any reference in the Contract to a Clause number or Appendix shall be deemed to refer to the corresponding Substitute Clause number or Appendix listed in Appendix 0/1, 0/2 or 0.5.

9. Where a Clause is altered any original Table referred to in the Clause shall apply unless the Table is also altered. Where a Table is altered any reference in a Clause to the original Table shall apply to the altered Table.

10. Where a Clause in the Specification for Highway Works relates to work goods or materials which are not required for the Works it shall be deemed not to apply.

11. Any Appendix referred to in the Specification for Highway Works which is not used shall be deemed not to apply.

12. Where a Clause in the Specification for Highway Works is prefixed by an # this indicates that this particular Clause has a substitute National Alteration for one or more of the Overseeing Organisations of Scotland, Wales or Northern Ireland. Substitute or additional National Clauses shall be used within countries to which they specifically apply and they are deemed to replace corresponding Clauses in the main text of the Specification for Highway Works as appropriate. The substitute National Clauses are located at the end of the relevant Series together with the additional National Clauses of the Overseeing Organisations.

13. Other than where references to the Overseeing Organisation are made in the context of the Overseeing Organisation granting statutory or type approvals, the roles and functions of the Overseeing Organisation shall be undertaken by the Engineer.

    Where the Specification for Highway Works requires the provision of documentation to the Overseeing Organisation for statutory or type approval such documentation shall be provided to the Client.

13. If the Specification for Highway Works is used in conjunction with a Contract under which the Contractor is responsible for the design of any part of the Permanent Works, the delegation of the roles and functions of the Overseeing Organisation as stated in paragraph 12 above shall be further amended as follows:

    (i) If any agreement, consent or approval required to be obtained from the Overseeing Organisation impacts on the health and safety of the general public, the environment or any property or equipment not owned or operated by the Contractor, such agreement, consent, approval shall be obtained from the Client.

    (ii) Where the Specification for Highway Works provides for the Overseeing Organisation to require a test, waive the requirement for a test or alter testing

frequency, the party to whom the Overseeing Organisation's roles and functions have been ascribed by paragraph
12 above shall exercise such decisions in accordance with the Secretary of State's requirements stated in the Contract.

APPENDIX 0/1: CONTRACT-SPECIFIC ADDITIONAL, SUBSTITUTE AND CANCELLED CLAUSES, TABLES AND FIGURES INCLUDED IN THE CONTRACT

1. List of Additional Clauses, Tables and Figures:

Clause No.(Etc)	Title	Written on Page No. Following
SERIES 2700	**MAINTENANCE**	
2700AR	CONTRACTORS STAFF	
2701AR	SERVICE LEVEL AGREEMENT	
2702AR	PROVISION OF LIGHTING AND/OR CABLING DESIGN SERVICES	
2703AR	NUMBERING OF ROAD LIGHTING UNITS, LIT TRAFFIC SIGNS, BOLLARDS AND FEEDER PILLARS	
2704AR	NIGHT PATROL INSPECTION SYSTEM	
2705AR	INSTALLATION / REMOVAL OF BANNERS	
2706AR	VERTICAL REALIGNMENT OF TRAFFIC SIGNS	
2707AR	INSTALLATION OF TRAFFIC SIGN POST	
2708AR	INSTALLATION OF TRAFFIC SIGN PLATE	
2709AR	VERTICAL REALIGNMENT OF ROAD LIGHTING UNITS	
2710AR	INSTALLATION OF LIGHTING COLUMN AND BRACKET	
2711AR	INSTALLATION OF LUMINAIRE, ASSOCIATED ELECTRIC EQUIPMENT AND WIRING	
2712AR	PROVING ELECTRICAL INTEGRITY OF INTERNAL WIRING AND ASSOCIATED ELECTRICAL EQUIPMENT OF ROAD LIGHTING, LIT SIGN UNIT AND FEEDER PILLAR	
2713AR	DOUBLE POLE ISOLATION	
2714AR	OPTIONAL FUTURE SERVICES	

Contract Specific Additional, Substitute and cancelled clauses, tables and figures included in the Contract

Additional Clauses, Tables and Figures:	
Clause No.	**Title and Written Text**
1200AR	**ROUTINE MAINTENANCE OF TRAFFIC SIGNS** 1. The routine maintenance and electrical inspection and testing of traffic signs is separately specified in Series 2700 but any work carried out under Series 2700 shall also conform to the appropriate requirements of this Series 1200.
1300AR	**ROUTINE MAINTENANCE OF ROAD LIGHTING COLUMNS AND BRACKETS AND CCTV MASTS** 1. The routine maintenance and electrical inspection and testing of road lighting columns and brackets and CCTV masts is specified in Series 2700 but any work carried out under Series 2700 shall also conform to the appropriate requirements of this Series 1300.
1400AR	**ROUTINE ELECTRICAL MAINTENANCE, INSPECTION AND TESTING** 1. The routine maintenance and electrical Inspection and testing of electrical equipment for road lighting and traffic signs is specified in Series 2700 but any work carried out under Series 2700 shall also conform to the appropriate requirements of this Series 1400.

Contract Specific Additional, Substitute and cancelled clauses, tables and figures included in the Contract

Additional Clauses, Tables and Figures:	
Clause No.	**Title and Written Text**
2700AR	**CONTRACTORS STAFF** 1. All Contractor's employees and sub-contractors engaged to undertaken works under the Contract shall: • be Competent Persons to NHSS8 • be trained to HESA (G39) certification and before commencing any works under the Contract, • receive instructions in safe working practices and electrical safety as required by the Engineer. • be classified as "Category 1" or "Category 2" on the "Competent Persons Authorisation Certificate" • hold a minimum Level 2 qualification in Electrotechnical Technology (City and Guilds 236 Part 1 Electrical Installation). • wear their identity cards in a prominent position at all times when engaged on the Contract. 2. All Contractor's employees and sub-contractors engaged to undertaken works under the Contract shall before commencing work on the site: • be at all times as clean and presentable as is practically possible. • wear clean approved reflective and fluorescent clothing approved by the Engineer. • where engaged on works within the Public Highway environment suitable and appropriate clothing is to be worn and all clothing clearly marked with the Contractor and or sub-contractors company name. • whereby any Works relate to the provisions of S.67 of the New Roads and Street Works Act 1991 suitable and appropriate clothing is to be worn as defined under the Act. • 3. The Contractor shall provide identity cards for each of their employees and those of their Sub-Contractors engaged upon the works delivered under the Contract. a) The identity card shall include: • the name and address of their employer, • the name of the full name of their employee • their photograph

Contract Specific Additional, Substitute and cancelled clauses, tables and figures included in the Contract

Additional Clauses, Tables and Figures:	
Clause No.	**Title and Written Text**
2701AR	**SERVICE LEVEL AGREEMENT AND KEY PERFORMANCE INDICATORS** Refer to ITT Section B Scope Section 5 Contract Management and Schedule 2
2702AR	**PROVISION OF LIGHTING AND/OR CABLING DESIGN SERVICES** 1. Any of the Contractor's employees and or sub-contractors who are to be engaged to undertake any design works under the Contract shall, prior to undertaking the design works: • have attended the Lighting Design course modules delivered by the Institution of Lighting Professionals (ILP), and or similar approved design courses. • Be able to demonstrate a minimum of 5 years appropriate lighting and cable design experience • Hold a G39 certification. • meet the requirements detailed in the ILP Competency Requirements for Lighting Design Staff Highway Lighting Design Implementation 2. The Designer undertake site survey. 3. The Designer will obtain and collate Statutory Undertakers plant locations. 4. The Designer will design drawings will show new column locations, existing columns to be removed, details and routes of private cable, if required. However, if no cabling is shown this will denote a single phase DNO supply. Drawings will also be produced for all electrical details such as feeder pillars, wiring schematics and termination details. Drawings will also show setting out details. To include; • Position and plan number of columns • Bracket arm and luminaire orientation. 5. The Designer will provide design and calculations for luminance-based designs for each lighting system in the form of an output report from the design software. Illuminance/luminance levels will be provided in the form of either an output report from an approved design software or by drawing. CAD-based design software should be used to show isolux footprints depending on the complexity of the design area. 6. The Designer will provide details of any attachments to be re-installed will be identified in a schedule. The schedule will identify the attachment and the column number to which it is to be attached. Cable design calculations shall fully comply with BS 7671 7. Upon completion of the design a Scope document will be produced detailing

Contract Specific Additional, Substitute and cancelled clauses, tables and figures included in the Contract

Additional Clauses, Tables and Figures:	
Clause No.	**Title and Written Text**

	all equipment required to install the design on site and will include a setting out schedule detailing;
	• Column setbacks.
	• Mounting height
	  • Bracket Projections
	  • Bracket position
	  • Spigot position
	  • Luminaire angle
	  • Lantern type
	  • Type of optical control
	  • Lamp holder/reflector position.
	  • Maintenance Factor used
	
	8. A Price List will also be produced to allow for accurate pricing by a contractor
	
	9. A design risk assessment shall be produced by designer.
	
	10. Design information to be submitted to the Client for approval
	
	11. Respond to all comments from the Client and amend submission as required.

2703AR	**NUMBERING OF ROAD LIGHTING UNITS, LIT TRAFFIC SIGNS, BOLLARDS AND FEEDER PILLARS.** 1. The apparatus to be numbered and/or renumbered will be identified by the Engineer and a drawing and/or schedule issued to the contractor. The numbering shall fully comply with the requirements of Series 1300. 2. To number or renumber apparatus the contractor shall:- (i) Clean down the area (as agreed with the Engineer to which the number is to be applied and/or remove existing number. (ii) Apply number in position as agreed with the Engineer. (iii) Ensure any surplus materials are removed from site and disposed of in the appropriate manner.

Contract Specific Additional, Substitute and cancelled clauses, tables and figures included in the Contract

Additional Clauses, Tables and Figures:	
Clause No.	**Title and Written Text**
2704AR	**NIGHT PATROL INSPECTION ROUTE** 1. The Client shall submit to the Contractor for his acceptance a night patrol inspection route. The night patrol inspection route shall:- (i) include for the systematic inspection and verification of the existence and condition of every Lighting Unit and enable all Unit Failures to be identified, on specified **traffic routes** supplied by the Engineer. (ii) be commenced between 30 minutes and 90 minutes after sunset (iii) be carried out in the Contractor's vehicle fitted with a GPS tracking system and a roof mounted amber flashing beacon. (iv) include for all night patrol inspection personnel to wear high visibility jackets or vests. (v) include any risk assessment and method statements to comply with the requirements of the Contract and any relevant legislation. 2. From time to time the Engineer may require the Contractor to modify or adjust the accepted night patrol inspection route to take account of any additions or modifications to the Lighting Units. 3. All Unit Failures identified on night patrol inspections shall be checked for accuracy by the Contractor and submitted to the Engineer electronically. The report shall be clearly printed in block capitals on the scouting report form provided by the Engineer.
2705AR	**INSTALLATION / REMOVAL OF BANNERS** 1. The Contractor shall at the request of the Engineer collect banners from a designated store and deliver to site. 2. The Contractor shall provide access equipment appropriate to the task. 3. The Contractor shall visually inspect the banner mounting points and report any defects to the Engineer. 4. The Contractor shall install/remove banners using suitable fixtures and fittings. 6. The Contractor shall at the request of the Engineer remove banners from site and return to designated store.

Contract Specific Additional, Substitute and cancelled clauses, tables and figures included in the Contract

Additional Clauses, Tables and Figures:	
Clause No.	**Title and Written Text**
2706AR	**VERTICAL REALIGNMENT TRAFFIC SIGNS** 1. After supporting the post the Contractor shall carefully excavate by hand in any material, round the lighting unit to below the cable entry, to the existing concrete foundation. Care must be taken during the excavation not to damage the electricity supply cable or any other services that may be present. Should any damage be caused to any of the cables or services during the works then the Contractor will contact the relevant utility company to arrange for repair, and advise the Client of their actions. 2. After vertical realignment the hole shall be backfilled and compacted ensuring that any void between the existing concrete foundation and the surrounding ground has been filled and compacted. 3. The Contractor shall be responsible for making good any damage to the post or its protective system caused during the operation. 4. The works order, issued by the Engineer giving details of each vertical realignment, shall be signed by the Contractor indicating the completed work prior to being returned to the Engineer. The completed forms shall be returned by the Contractor to the Engineer at weekly intervals on completion of the work.
2707AR	**INSTALLATION OF TRAFFIC SIGN POST** 1. The installation of traffic sign post shall fully comply with the requirements of this Series, the appropriate Clause of Series 1200 and amendments as specified in the Contract but shall not include for the supply of the traffic sign post and any electrical works. 2. The works order, issued by the Engineer giving details of each traffic sign post installed, shall be signed by the Contractor indicating the completed work prior to being returned to the Engineer. The complete forms shall be returned by the Contractor to the Engineer at weekly intervals.
2708AR	**INSTALLATION OF TRAFFIC SIGN PLATE** 1. The installation of traffic sign plate shall fully comply with the requirements for this series, the appropriate Clause of Series 1200 and amendments as specified in the Contract but shall not include for the supply of the sign plate, sign post and any electrical work.
2709AR	**VERTICAL REALIGNMENT LIGHTING COLUMNS**

Contract Specific Additional, Substitute and cancelled clauses, tables and figures included in the Contract

Additional Clauses, Tables and Figures:	
Clause No.	**Title and Written Text**
	5. After supporting the column the Contractor shall carefully excavate by hand in any material, round the lighting unit to below the cable entry, to the existing concrete foundation. Care must be taken during the excavation not to damage the electricity supply cable or any other services that may be present. Should any damage be caused to any of the cables or services during the works then the Contractor will contact the relevant utility company to arrange for repair and advise the Client of their actions. 6. After vertical realignment the hole shall be backfilled and compacted ensuring that any void between the existing concrete foundation and the surrounding ground has been filled and compacted. 7. The Contractor shall be responsible for making good any damage to the column or its protective system caused during the operation. 8. The works order, issued by the Engineer giving details of each vertical realignment, shall be signed by the Contractor indicating the completed work prior to being return to the Engineer. The completed forms shall be returned by the Contractor to the Engineer at weekly intervals on completion of the work.

Contract Specific Additional, Substitute and cancelled clauses, tables and figures included in the Contract

Additional Clauses, Tables and Figures:	
Clause No.	**Title and Written Text**
2710AR	**INSTALLATION OF LIGHTING COLUMN AND BRACKET** 12. The installation of lighting column and bracket shall fully comply with the requirements of this Series and the appropriate Clauses of Series 1300, amended as specified in the Contract but shall not include for the lighting column, bracket arm and any electrical work. 13. The works order, issued by the Engineer giving details of each lighting column and bracket installed, shall be signed by the Contractor indicating the completed work prior to being returned to the Engineer. The completed forms shall be returned by the Contractor to the Engineer at daily intervals on completion of the work.
2711AR	**INSTALLATION OF LUMINAIRE, ASSOCIATED ELECTRICAL EQUIPMENT AND WIRING** 1. The installation of luminaire and associated electrical equipment only shall fully comply with the requirements of this Series and the appropriate clauses of Series 1200, 1300 & 1400 and amended as specified in the Contract but shall not include for the luminaire, photocell, column, bracket and foundation. 2. The Contractor shall carefully remove to store any items of equipment instructed by the Engineer. 3. The Contractor shall ensure that the access doors to the column are securely attached before leaving the site. Where it is not possible to lock or repair an existing door a stainless steel band and buckle must be used to prevent unauthorised access. In situations where the door is missing a temporary door must be fitted. Any such repairs shall be reported to the Engineer within 5 working days. 4. The works order, issued by the Engineer giving details of each luminaire and associated electrical equipment installed, shall be signed by the Contractor indicating the completed work prior to being returned to the Engineer. The completed forms shall be returned by the Contractor to the Engineer at weekly intervals on completion of the works.
2712AR	**PROVING ELECTRICAL INTEGRITY OF INTERNAL WIRING AND ASSOCIATED ELECTRICAL EQUIPMENT OF ROAD LIGHTING, LIT SIGN UNIT AND FEEDER PILLAR IN ACCORDANCE WITH BS 7671** 1. The Contractor will be instructed by the Engineer as and when to carry out the proving electrical integrity to a Road Lighting, lit sign unit and feeder pillar. 2. The Contractor shall ensure that the access doors to any columns are securely attached before leaving the site. Where it is not possible to lock or repair an existing door a stainless steel band and buckle must be used

Contract Specific Additional, Substitute and cancelled clauses, tables and figures included in the Contract

Additional Clauses, Tables and Figures:	
Clause No.	**Title and Written Text**
	to prevent unauthorised access. In a situation where the door is missing a temporary door must be fitted. Any such repairs shall be reported to the Engineer within 5 working days. 3. The works order, issued by the Engineer giving details of each Road Lighting, lit sign unit and feeder pillar to be tested, shall be signed by the Contractor indication the completed work prior to being returned to the Engineer. The completed forms shall be returned by the Contractor to the Engineer at weekly intervals on completion of the works.
2713AR	**DOUBLE POLE ISOLATION** 1. The installation of double pole isolator shall fully comply with the requirements of this section and amendments as specified in the Contract but shall not include for the supply of the double pole isolator.
2714AR	**OPTIONAL FUTURE SERVICES** Optional future services may be required, but not guaranteed, by the Client, as listed below, but not exhaustive: • The installation of retrofit LED lamps and/or gear trays to illuminated traffic signs • Painting of lampposts to the Client's Scope requirements • Removal and installation of ticket machines including associated power supply works • Provision and installation of part-night or dimming photo cells • Provision and installation of CMS equipment ie nodes and collectors • Assisting with the installation and maintenance of CCTV projects • Provision and installation of advance notices for road works/schemes etc • Installation of temporary banners/notices etc onto lampposts • Installation of EV Charging pavement Gullys. All the above services, if required, will be on an "as and when" basis.

APPENDIX 0/3 - LIST OF NUMBERED APPENDICES REFERRED TO IN THE SPECIFICATION AND INCLUDED IN THE CONTRACT

List 'A': List of Numbered Appendices Referred to in the Specification for Highway Works

Volume No.	Completed by	Appendix. No.	Title	
			INTRODUCTION	
1		0/1	Contract-specific Additional, Substitute and Cancelled Clauses, Tables and Figures Included in the Contract	
1		0/2	Contract-specific Minor Alterations to Existing Clauses, Tables and Figures included in the Contract	Not Used
1		0/3	List of Numbered Appendices Referred to in the Specification and included in the Contract	
1		0/4	List of Drawings Included in the Contract	
1		0/5	Special National Alterations of the Overseeing Organisations of Scotland/Wales/Northern Ireland	Not Used
			PRELIMINARIES	
1		1/1	Temporary Accommodation and Equipment for the Engineer	Not Used
1		1/2	Vehicles for the Engineer	Not Used
1		1/3	Communication System for the Engineer	Not Used
1		1/4	Working and Fabrication Drawings	Not Used
1		1/5	Testing to be Carried out by the Contractor	
1		1/6	Supply and Delivery of Samples to the Engineer	Not Used
1		1/7	Site Extent and Limitations on Use	
1		1/8	Operatives for the Engineer	Not Used
1		1/9	Control of Noise and Vibration	Not Used
1		1/10	Structures to be Designed by the Contractor	Not Used
1		1/11	Structural Elements and Other Features to be Designed by the Contractor	Not Used
1		1/12	Setting Out and Existing Ground Levels	
1		1/13	Programme of Works	
1		1/14	Payment Applications	Not Used

Volume No.	Completed by	Appendix. No.	Title	
1		1/15	Accommodation Works	Not Used
1		1/16	Privately & Publicly Owned Services or Supplies	Not Used
1		1/17	Traffic Safety & Management	
1		1/18	Temporary Diversions for Traffic	Not Used
1		1/19	Routeing of Vehicles	Not Used
1		1/20	Recovery Vehicles for Breakdowns	Not Used
1		1/21	Information Boards	
1		1/22	Progress Photographs	Not Used
1		1/23	Risks to Health and Safety from Materials or Substances	
1		1/24	Quality Management System	
1		1/25	Temporary Closed Circuit Television (CCTV) System for Monitoring of Traffic.	Not Used
1		1/26	Temporary Automatic Speed Camera System for the Enforcement of Mandatory Speed Limits at Roadworks (TASCAR)	Not Used
1		1/27	Temporary Automatic Speed Camera System for the Enforcement of Mandatory Speed Limits at Roadworks (TASCAR) – Particular Requirements	Not Used
			SITE CLEARANCE	
1		2/1	List of Buildings etc to be Demolished	Not Used
1		2/2	Filling of Trenches and Pipes	Not Used
1		2/3	Retention of Material Arising from Site Clearance	
1		2/4	Explosives and Blasting	Not Used
1		2/5	Hazardous Materials	
			FENCING AND ENVIRONMENTAL BARRIERS	
1		3/1	Fencing, Gates and Stiles	Not Used
1		3/2	Environmental Barriers	Not Used

Volume No.	Completed by	Appendix. No.	Title	
1			**ROAD RESTRAINT SYSTEMS (VEHICLE & PEDESTRIAN)**	
1		4/1	Road restraint systems (Vehicle & Pedestrian)	Not Used
1		4/2	Information required to demonstrate compliance of Road Restraint System to BS EN 1317-1, BS EN 1317-2, BS EN 1317-3 and DD ENV 1317-4:2002	Not Used
			DRAINAGE AND SERVICE DUCTS	
1		5/1	Drainage Requirements	Not Used
1		5/2	Service Duct Requirements	
1		5/3	Surface Water Channels and Drainage Channel Blocks	Not Used
1		5/4	Fin Drains and Narrow Filter Drains	Not Used
1		5/5	Combined Drainage and Kerb Systems	Not Used
1		5/6	Linear Drainage Channel Systems	Not Used
1		5/7	Thermoplastic Structural Wall Pipes and Fittings	Not Used
			EARTHWORKS	
1		6/1	Requirements for Acceptability & Testing etc of Earthworks Materials	Not Used
1		6/2	Requirements for Dealing with Class U2 Unacceptable Material	Not Used
1		6/3	Requirements for Excavation, Deposition, Compaction (Other than Dynamic Compaction)	Not Used
1		6/4	Requirements for Class 3 Material	Not Used
1		6/5	Geotextiles Used to Separate Earthworks Materials	Not Used
1		6/6	Fill to Structures & Fill Above Structural Foundations	Not Used
1		6/7	Sub-formation & Capping & Preparation & Surface Treatment of Formation	Not Used
1		6/8	Topsoiling, Grass Seeding and Turfing	Not Used
1		6/9	Earthwork Environmental Bunds, Landscape Areas, Strengthened Embankments	Not Used

Volume No.	Completed by	Appendix. No.	Title	
1		6/10	Ground Anchorages, Crib Walling and Gabions	Not Used
1		6/11	Swallow Holes & Other Naturally Occurring Cavities & Disused Mine Workings	Not Used
1		6/12	Instrumentation & Monitoring	Not Used
1		6/13	Ground Improvement	Not Used
1		6/14	Limiting Values for Pollution of Controlled Waters	Not Used
1		6/15	Limiting Values for Harm to Human Health and the Environment	Not Used
1		6/70	Earthworks Schedule	
			ROAD PAVEMENTS - GENERAL	
1		7/1	Permitted Pavement Options	Not Used
1		7/2	Excavation, Trimming & Reinstatement of Existing Surfaces	
1		7/3	Surface Dressing	Not Used
1		7/4	Bond Coats, Tack Coats and other Bituminous Sprays	Not Used
1		7/5	In Situ Recycling : The Remix and Repave Processes	Not Used
1		7/6	Breaking Up or Perforation of Existing Pavement	Not Used
1		7/7	Slurry Surfacing Incorporating Microsurfacing	Not Used
1		7/8	Not Used	Not Used
1		7/9	Cold-Milling (Planing) of Bituminous Bound Flexible Pavement	Not Used
1		7/10	Worksheet Pro Forma for Results of Testing for Constituent Materials Recycled Aggregate and Recycled Concrete Aggregate	Not Used
1		7/11	Overband and Inlaid Crack Sealing Systems	Not Used
1		7/12	Arrester Beds	Not Used
1		7/13	Saw-Cut and Seal Bituminous Overlays on Existing Jointed Concrete Pavements	Not Used
1		7/14	Preparation of Jointed Concrete Pavements Prior to Overlaying and Saw-Cut and Seal of the Bituminous Overlay	Not Used
1		7/15	Saw-Cut, Crack and Seat Existing Jointed Reinforced Concrete Pavements	Not Used

List of Numbered Appendices Referred to in the Specification and Included in the Contract

Volume No.	Completed by	Appendix. No.	Title	
1		7/16	Cracking and Seating of Existing Jointed Unreinforced Concrete Pavements and Hydraulically Bound Mixture (HBM) Bases	Not Used
1		7/17	Cracking Plant and Equipment Progress Record	Not Used
1		7/18	Site Specific Details and Requirements for Cold Recycled Bitumen Bound Material	Not Used
1		7/19	Back-Analysis of Falling Weight Deflectometer (FWD) Measurements Made on Concrete Pavements Treated by Fractured Slab Techniques	Not Used
1		7/20	Site Specific Details and Requirements for Inducing Cracks	Not Used
1		7/21	Surface Dressing - Recipe Specification	Not Used
1		7/22	Repairs to Potholes	Not Used
			KERBS, FOOTWAYS AND PAVED AREAS	
1		11/1	Kerbs, Footways and Paved Areas	Not Used
1		11/2	Access Steps	Not Used
			TRAFFIC SIGNS	
1		12/1	Traffic Signs : General	Not Used
1		12/2	Traffic Signs : Marker Posts	Not Used
1		12/3	Traffic Signs : Road Markings and Studs	Not Used
1		12/4	Traffic Signs : Cones, Cylinders, FTD's & Other Traffic Delineators	Not Used
1		12/5	Traffic Signs : Traffic Signals	Not Used
1		12/6	Traffic Signs : Special Sign Requirements on Gantries	Not Used
1		12/70	Routine Maintenance of Traffic Signs, Bollards and Beacons	
1		12/71	Additional Maintenance of Traffic Signs, Bollards and Beacons	

Volume No.	Completed by	Appendix. No.	Title	
			ROAD LIGHTING COLUMNS AND BRACKETS	
1		13/1	Information to be Provided When Specifying Lighting Columns and Brackets	Not Used
1		13/2	(Specification for Highway Works) Typical Lighting Column and Bracket Data Sheets 1 and 2	Not Used
1		13/3	Instructions for Completion of Lighting Column and Bracket Data Sheets	Not Used
1		13/4	Information to be Provided When Specifying CCTV Masts	Not Used
1		13/5	(Specification for Highway Works) Typical CCTV Mast Data Sheet	Not Used
1		13/6	Instructions for Completion of Cantilever Masts Data Sheets (05/01)	Not Used
1		13/7	Information to be Provided When Specifying Cantilever Masts (11/03)	Not Used
1		13/8	(Specification for Highway Works) Typical Cantilever Masts Data Sheets 1 and 2 (11/03)	Not Used
1		13/9	Instructions for Completion of CCTV Mast Sheets	Not Used
1		13/70	Routine Maintenance of Road Lighting Units	
1		13/71	Additional Maintenance of Road Lighting Units	
			ELECTRICAL WORK FOR ROAD LIGHTING AND TRAFFIC SIGNS	
1		14/1	Site Records	
1		14/2	Location of Lighting Units & Feeder Pillars	Not Used
1		14/3	Temporary Lighting	Not Used
1		14/4	Electrical Equipment for Road Lighting	Not Used
1		14/5	Electrical Equipment for Traffic Signs	Not Used
1		14/70	Electrical Testing & Inspection Certificate for Private Cable Networks	Not Used

Volume No.	Completed by	Appendix. No.	Title	
			COMMUNICATIONS	
1		15/1	Motorway Communications	Not Used
			PILING AND EMBEDDED RETAINING WALLS	
1		16/1	General Requirements for Piling and Embedded Retaining Walls	Not Used
1		16/2	Precast Reinforced and Prestressed Concrete Piles and Precast Reinforced Concrete Segmental Piles	Not Used
1		16/3	Bored Cast-in-Place Piles	Not Used
1		16/4	Bored Piles Constructed using Continuous Flight Augers and Concrete or Grout Injection through Hollow Auger Stems	Not Used
1		16/5	Driven Cast-in-Place Piles	Not Used
1		16/6	Steel Bearing Piles	Not Used
1		16/7	Reduction of Friction on Piles	Not Used
1		16/8	Non-Destructive Methods for Testing Piles	Not Used
1		16/9	Static Load Testing of Piles	Not Used
1		16/10	Diaphragm Walls	Not Used
1		16/11	Hard/Hard Secant Pile Walls	Not Used
1		16/12	Hard/Soft Secant Pile Walls	Not Used
1		16/13	Continuous Bored Pile Walls	Not Used
1		16/14	King Post Walls	Not Used
1		16/15	Steel Sheet Piles	Not Used
1		16/16	Integrity Testing of Wall Elements	Not Used
1		16/17	Instrumentation for Piles and Embedded Walls	Not Used
1		16/18	Support Fluid	Not Used
			STRUCTURAL CONCRETE	
1		17/1	Schedule for the Specification of Designed Concrete	Not Used

Volume No.	Completed by	Appendix. No.	Title	
1		17/2	Concrete - Impregnation Schedule	Not Used
1		17/3	Concrete - Surface Finishes	Not Used
1		17/4	Concrete – General	Not Used
1		17/5	Buried Concrete	Not Used
1		17/6	Grouting and Duct Systems for Post-Tensioned Tendons	Not Used
1		18/1	**STRUCTURAL STEELWORK** Requirements for Structural Steelwork	Not Used
1		19/1	**PROTECTION OF STEELWORK AGAINST CORROSION** (Specification for Highways Works)) Sheet No. Form HA/P1 (New Works) Paint system Sheet	Not Used
1		19/2	Requirements for Other Work	Not Used
1		19/3	(Specification for Highway Works) Form HA/P2 Paint Data Sheet	Not Used
1		19/4	(Specification for Highway Works) Form HA/P3 Paint Sample Dispatch List: Sheet 1 & 2	Not Used
1		19/5	General Requirements	Not Used
1		20/1	**WATERPROOFING FOR STRUCTURES** Waterproofing for Concrete Structures	Not Used
1		21/1	**BRIDGE BEARINGS** Bridge Bearing Schedule	Not Used
		22	**NOT USED**	

Volume No.	Completed by	Appendix. No.	Title	
			BRIDGE EXPANSION JOINTS AND SEALING OF GAPS	
1		23/1	Bridge Deck Expansion Joint Schedule	Not Used
1		23/2	Sealing of Gaps Schedule (other than in Bridge Deck Expansion Joints)	Not Used
			BRICKWORK, BLOCKWORK AND STONEWORK	
1		24/1	Brickwork, Blockwork and Stonework	Not Used
			SPECIAL STRUCTURES	
1		25/1	Requirements for Corrugated Steel Buried Structures	Not Used
1		25/2	Requirements for Reinforced Earth and Anchored Earth Structures	Not Used
1		25/3	Requirements for Pocket Type Reinforced Brickwork Retaining Wall Structures	Not Used
1		25/4	Environmental Barriers	Not Used
			MISCELLANEOUS	
1		26/1	Ancillary Concrete	Not Used
1		26/2	Bedding Mortar	Not Used
1		26/3	Cored thermoplastic Node Markers	Not Used
1		26/70	Site/Street Furniture/Equipment	Not Used
			LANDSCAPE AND ECOLOGY.	
1		30/1	General.	Not Used
1		30/2	Weed Control.	Not Used
1		30/3	Control of Rabbits and Deer	Not Used
1		30/4	Ground Preparation.	Not Used
1		30/5	Grass Seeding, Wildflower Seeding and Turfing	Not Used
1		30/6	Planting.	Not Used
1		30/7	Grass, Bulbs and Wildflower Maintenance	Not Used
1		30/8	Watering.	Not Used

Volume No.	Completed by	Appendix. No.	Title	
1		30/9	Establishment Maintenance for Planting.	Not Used
1		30/10	Maintenance of Established Trees and Shrubs.	Not Used
1		30/11	Management of Waterbodies	Not Used
1		30/12	Special ecological Measures.	Not Used
			MAINTENANCE PAINTING OF STEELWORK	
1		50/1	(Specification for Highways Works) Form HA/P1 (Maintenance) Paint System Sheet	Not Used
1		50/2	Requirements for other Work	Not Used
1		50/3	(Specification for Highways Works) Form HA/P2 Paint Data Sheet	Not Used
1		50/4	(Specification for Highways Works) Form HA/P3 Paint Sample Despatch List: Sheet 1 & 2	Not Used
1		50/5	General Requirements	Not Used

APPENDIX 0/4 – LIST OF DRAWINGS INCLUDED IN THE CONTRACT

2. Standard Drawings

DRAWING No.	TITLE
NL/RL0007	Standard Column Foundation Details
NSD/114/105	Electrical Warning Notices
NSD/114/109	Feeder Pillar Single Phase Foundation Detail
NSD/114/116	Feeder Pillar Three Phase Foundation Detail
NSD/114/119A	Feder Pillar Type 16A & 16B Standard Detail

APPENDIX 1/5 – TESTING TO BE CARRIED OUT BY THE CONTRACTOR

1. The Contractor shall on completion of all new, altered or modified works carry out electrical inspections and tests prior to commissioning or recommissioning the installation.

2. Completion and submission of test certificate to the Engineer as defined in Appendix 12/71 and 13/71.

APPENDIX 1/7 – EXTENT OF CONTRACT AREA AND SITE AND LIMITATIONS ON USE

1. **Extent of Contract Area**

The Contract Area is shown below and covers the County of North Lincolnshire.

About North Lincolnshire

North Lincolnshire is a fantastic place to live and work. Home to just under 170,000 people, our population is set to grow by a further 4,000 over the next 20 years. 37,000 children and young people live in North Lincolnshire, who benefit from highly rated nurseries and schools as well as outstanding support

The area has 76,000 homes situated across 86 settlements, from the busy urban centre of Scunthorpe to tranquil rural hamlets. There is a diverse range of housing with prices well below the national average.

Residents and visitors can enjoy extensive footpaths, cycleways, open spaces and 66 public gardens and parks. There are a wide range of sport and leisure facilities as well as cultural venues promoting local history and creativity

Benefitting from fast and easily accessed transport networks, 5,800 businesses have set up in North Lincolnshire. Unemployment is low and 54% of local jobs are highly skilled. The area is also benefitting from Towns Fund investment that has already delivered improved access to gigabit broadband, a new urban park and solar panels for schools

2. **Limitations on the Use of the Contract Area**

a) The Contractor shall comply with all of the various limitations and restrictions imposed through the Conditions of Contract and the Scope.

3. **Limitations on the Use of the Site**

a) The Contractor will not have exclusive possession of the Site and must cater for other users of the highway within the site.

APPENDIX 1/12 – SETTING OUT AND EXISTING GROUND LEVELS

1. The setting out information shall be as agreed on Site with the Engineer prior to works commencing.

2. In order that the Engineer may carry out the necessary checks, the Contractor shall give 48 hours notice that the setting out will be ready for checking.

3. No work which requires setting out shall be commenced until the setting out has received the approval of the Engineer.

4. Where setting out is undertaken by the Engineer the methods of referencing will be consistent with those used by the Contractor.

APPENDIX 1/13 – PROGRAMME OF WORKS

ROUTINE MAINTENANCE

1. Routine Maintenance (Traffic Signs & Electrical testing)

   (a) The Engineer will provide the Contractor with a works order for routine maintenance works prior to the commencement of the works.

   (b) The Contractor shall provide a programme of Works for routine maintenance on a monthly basis. in the form of a location/time related bar chart produced as a result of a critical path analysis and shall comply with the specific requirements of Appendix 1/13, Part 1.

APPENDIX 1/13 (CONT'D) – PROGRAMME OF WORKS

ADDITIONAL MAINTENANCE

1. Installation Works

   (a) The Engineer will provide the Contractor with works orders for installation works at such intervals as the Engineer may decide detailing the works to be undertaken and the site definition in accordance with the NRSWA as updated in accordance with the Traffic Management Act 2004.

   (1a) Minor Works with Excavation

   Works less than 5 columns within a 500m radius or 10 columns in a street or a 30m length of trench.

   (ii) On non-traffic sensitive streets, a 7-day notice is required to be served by the Engineer following agreement of the Contractor's programme.

   (1b) Standard Excavation

   Works greater than 5 columns within a 500m radius or 10 columns in a street or a 30m length of trench.

   (ii) On non-traffic sensitive streets, a 7-day notice is required to be served by the Engineer following agreement of the Contractor's programme.

2. Emergency Works

   The Contractor may carry out the replacement of damaged sign and road lighting equipment and one for one replacements without the production of a works programme after receipt of a works order from the Engineer and complying with the General Requirements of this Appendix.

GENERAL

1. The Contractor shall take into account in his programme of works the formal notices required in accordance with the Traffic Management Act 2004.

2. The Contractor shall prepare his programme to ensure that all operations shall take place in the general direction of the traffic flow and are carried out during normal working hours, avoiding

peak hours on roads with heavy traffic volumes except where instructed otherwise in writing by the Engineer.

3. During the currency of the Contract other Contractors may be employed to carry out works on the network. The Engineer will notify the Contractor a minimum of two weeks in advance of any lane closures to be implemented by other Contractors. The Contractor may not carry out work in the area of such lane closures other than within the confines of such closures.

4. The Contractor shall notify the Engineer at least two weeks in advance of any closures he wishes to implement.

5. No work shall be undertaken outside daylight hours except with the prior written agreement of the Engineer.

6. The Contractor shall provide on a weekly basis detail of the work completed during the preceding week and shall provide separately the proposed work for the following week.

APPENDIX 1/17 –TRAFFIC SAFETY AND MANAGEMENT

TRAFFIC SAFETY AND MANAGEMENT REQUIREMENTS

Documents Referred To

Traffic Management Act 2004	DfT
New Roads and Street Works Act 1991	DfT
Department of Transport / County Surveyor's Society Joint Report providing Notes for Guidance in relation to the implementation of the requirements of the Health and Safety at Work Act 1974 so far as they affect personnel who are required to undertake work on Motorways and Trunk Roads	DTp/CS.JR
Traffic Signs Manual – Chapter 8 – Traffic Signs Safety Measures and Signs for Road Works and Temporary Situations: 2009 published by The Stationary Office, TSO (Formerly HMSO)	TSM8

The recommendations, in relation to all purpose single and dual carriageway Trunk Roads, of the DTp/CS.JR are considered to be equally applicable to non-trunk roads. The Contractor shall take this into account, when carrying out work on any trafficked highways.

1. TRAFFIC MANAGEMENT - GENERAL

   a) North Lincolnshire Council shall issue the relevant notices under the Traffic Management Act 2004.

   b) The Contractor shall give 2 weeks notice to the Client with respect to requiring a notice to be submitted under the Traffic Management Act 2004

   c) The Contractor will be responsible for providing regular and timely updates as far as progress to the client to ensure compliance with the Act.

2. SAFETY AT ROADWORKS

   a) The Contractor shall comply with the Traffic Signs Manual – Chapter 8 "Traffic Safety Measures and "Safety at Street Works and Roadworks: 2013" and any subsequent amendments thereof, and equip maintenance vehicles with all necessary amber flashing beacons on the cab and at the rear.

3. TRAFFIC SAFETY AND MANAGEMENT FOR SHORT DURATION WORKS

   i) ROADS FOR NORMAL WORKING HOURS

   a) The Contractor shall comply with the Traffic Signs Manual – Chapter 8 "Traffic Safety Measures and "Safety at Street Works and Roadworks: 2013" and any subsequent amendments thereof, and equip maintenance vehicles with all necessary amber flashing beacons on the cab and at the rear.

b) High Visibility fluorescent yellow retro reflective clothing to BS EN 471:2003 shall be worn by all persons working on the public highway.

ii) ROADS WITH RESTRICTED WORKING HOURS

(a) When carrying out Works on dual carriageways, classified roads and other roads that are traffic sensitive, the Contractor shall liaise with the Engineer and where necessary the Police in respect of restricted working hours and traffic regulations and control before commencing of Works.

(b) The restrictions, which vary from time to time, exist to control the placing and removal of cones and/or temporary traffic signs and/or obstruction of continuous two-way traffic flow. These restrictions generally apply during the following times:-

Monday - Saturday
i) 07.30 – 09.30 hours
ii) 15.30 – 19.00 hours

iii) GENERAL

a) Where the circumstances of any particular case are not covered by the recommendations of Chapter 8, the Contractor shall submit his proposals for dealing with such situations in writing to the Engineer for his approval at least 7 days before the works are to commence.

b) Compliance with this Clause shall not relieve the Contractor of any of his obligations and liabilities under the Contract and under the relevant provisions of the Highways Acts.

4. DIVERSION OF TRAFFIC

a) The Contractor shall advise the Engineer as to the period of time which he will require in order to carry out the maintenance operations on each dual carriageway, trunk road or principal road. The Engineer will agree with the Contractor and the arrangements, dates and times for the necessary lane closures having carried out the necessary consultations. The Engineer will give the Contractor not less than six weeks notice of these arrangements, although the Engineer reserves the right to cancel or modify the arrangements of short notice due to overriding circumstances.

5. GENERAL

a) When planning the traffic safety and management measures the Contractor shall include for either covering, blanking-out or attaching alternative messages to existing permanent traffic signs, within or outside the area of the Works, which conflict with the traffic safety and management proposals. These temporary alterations to permanent traffic signs shall, where the Engineer gives his consent, be carried out by the Contractor, in compliance with Clause 1209, at the appropriate time in accordance with his traffic safety and management programme.

b) At least one traffic lane must be kept open to traffic in each direction on all dual carriageway roads at all times except when provision has been made in the Contract for other arrangements.

c) The control of traffic by means of traffic control signals, priority control of “Stop-Go” boards will not be permitted on any dual carriageway, Trunk or Principal Road even when operating as a single carriageway under traffic management.

d) With respect to the safety zone, in addition to TSM8 and Dtp/CS.JR the following additional requirements shall apply:-

The minimum clearance between any area in which work is being undertaken and any part of the trafficked carriageway shall be 1.2 metres for all dual carriageways and single carriageways subject to a speed restriction of 50mph or greater and 500mm for single carriageways subject to a speed restriction of less than 50mph. The outer boundary of the safety zone shall be marked in the usual way by traffic cones and/or cylinders. The inner boundary should be marked physically in an appropriate way wherever practicable to attract the workmen's attention to the limits of the working area.

e) Portable traffic signals must be of a type approved by the DTp under Section 65 of the Road Traffic Regulation Act 1984, Type Approval of Traffic Signal Equipment.

f) Except when under the protection of cones and barriers, all site traffic must comply with the normal highway regulations. Site traffic may only enter or leave the working area using the designated entry or exit points, as shown in the Contract Documents or agreed by the Engineer, and must do so in the direction of traffic flow. The Contractor shall not allow Site traffic to cross the central reserve of a dual carriageway to enter or exit the Works.

6. TEMPORARY SIGNS

a) All signs used for traffic management and control shall be lit during the hours of darkness if erected in a lit area or within 50 metres of the last lighting column of a lit area.

b) A minimum clearance of 450mm shall be provided between the carriageway in use and the nearest part of any temporary sign (excluding cones, cylinders, road markings and studs) or its supporting structure. Where this clearance cannot be met the signs shall be angled within the limits shown in Chapter 8. If this does not achieve sufficient clearance, and a satisfactory alternative location for the sign cannot be found, then the next smaller size of a sign shall be used and similarly angled, if necessary, to provide the specified clearance.

c) The Contractor shall erect and maintain all temporary portable signs in a manner to prevent them blowing over. Where signs have to be weighted down this should be in the form of fine granular material in a sack so that, should an impact occur, the sack will split and the contents be dispersed without causing further problems.

d) All cones and traffic cylinders used in traffic control on the Site shall be kept clean at all times throughout the period control to the satisfaction of the Engineer. Where a cone or traffic cylinder no longer has satisfactory reflective properties on its outer surface the Contractor shall replace the cone or traffic cylinder with one to the required standard or renew the plastic reflective sleeve, whichever is appropriate.

APPENDIX 1/21 –INFORMATION BOARDS

Information Boards shall be erected to the requirements of this Appendix.

1. Information Boards shall be provided on all sites which have a duration of more than 24 hours and where Traffic Management is left in place.

2. The Information Board shall carry the name of the Client, Contractor, Description of Work with contact Telephone Number for emergencies and be in accordance with The Traffic Signs Regulations and General Directions 2002, diagram No 7008.

3. Where the works are of a shorter duration and define as Category “C” Works as defined by Chapter 8 of The Traffic Sign Regulations, Information Boards will not be required however, all contractor’s plant must be properly identified with his name, address and telephone number for information and contact purposes.

4. The contractor shall equip all vehicles with demountable sign boards that advise that the Contractor is employed on works on behalf of North Lincolnshire Council.

APPENDIX 1/23: SUBSTANCES HAZARDOUS TO HEALTH

1. Substances hazardous to health shall include any material, which is either sprayed or dust which results from the mechanical cutting of road pavement or footpath materials which would cause discomfort or inconvenience to residents or occupiers of the adjacent properties or the public who are passing the Works. The Contractor shall consult with the Local Environmental Health Officer prior to undertaking such works and if so required, the Contractor shall undertake air quality monitoring.

2. Where substances are identified as being hazardous to health, a discomfort or an inconvenience to the workforce, residents or occupiers, the Contractor shall take all necessary precautions (e.g. using dust collection or damping down facilities on cutters) to prevent such hazard, discomfort or inconvenience and shall indicate in his method statement the proposals for dealing with such matters.

3. The Contractor shall be aware of the guidelines for the use of substances hazardous to health given in Advice Note SA 8/94. In particular it is anticipated that the following substances classified in the Advice Note are expected to be used and/or encountered and the Contractor shall follow the precautions contained therein for each substance.

Low Risk

Bituminous Tape	Sand	Natural Aggregate
Pulverised Fuel Ash	Blast Furnace Slag	Water Based Admixtures
Dust from cutting of Asphalts and Macadams		

Moderate Risk

Bitumen Joint Sealing Compounds etc	Thermoplastics
Cementitious Mortars and Grouts	Cement
Bitumen Cut Back	Concrete
Dust from Concrete, Cement etc	

High Risk

Bituminous Primers and Coatings

4. The Contractor shall not be relieved of his obligations under COSHH legislation.

5. The Contractor shall at all times prevent the spread by any means whatsoever of substances hazardous to health from a working area to an adjacent area.

APPENDIX 1/24: QUALITY MANAGEMENT SYSTEM

1. The Contractor shall institute and operate a quality management system complying with BS EN ISO 9002. The quality management system shall be described in a Quality Plan that shall be submitted to the Engineer for his acceptance.

   The Quality Plan shall cover the following items:

   i). Contractor's organisation and management
   ii). Contractor's method statements and construction procedures
   iii). Contractor's construction quality control

2. Items i) and iii) of the Quality Plan shall be submitted to the Engineer for his acceptance not later than 21 days after the award of the Contract.

   The Contractor shall submit other parts of the Quality Plan prior to start of any related work or activity and to a timetable included in item i).

3. Method statements are required in the Health and Safety Plan as listed in section 4.4 of Volume 3 Pre-Tender Health and safety Plan.

4 QUALITY PLAN REQUIREMENTS:

4.1 Contractor's Organisation and Management

This section of the Quality Plan shall include the following:

i). Definition of the Contract and its documentation.

ii). The organisation of the Contract, including the line of command and communication links between parties involved in the Contract

iii). Names, roles, responsibilities and authority of principals and key personnel.

iv). Identification of the Contractor's own staff responsible for overseeing each major activity.

v). The Principal Contractor's control of sub-contracts.

vi). Document control.

vii). Programme for submission of method statements and Suppliers Quality Plans. The Quality Plan shall identify procedures (which may be a part of the Contractor's general procedures) that cover the topics listed below. Copies of these procedures shall be made available to the Engineer on request.

viii). The quality plans for sub-Contractors and suppliers of work, goods and materials which are the subject of quality management schemes.

ix). Procedure for the preparation, review and adjustment of programmes for the effective progression of the Works and the recording of this.

x). Control and approval of purchases of materials.

xi). Control of off-site activities (where appropriate).

APPENDIX 1/24 (CONT'D): QUALITY MANAGEMENT SYSTEM

xii). Procedures for the regular review and recording by the Contractor of the quality of the Works.

xiii). Control of personnel selection, based on their care, skill and experience.

xiiii). Management review/audits to monitor and exercise adequate control over the implementation of the quality plan.

xv). Any other relevant item.

4.2 Contractor's Method Statements and Construction Procedures

This section of the Quality Plan shall include:

4.2.1 Detailed method statements for each major activity whether directly controlled or subcontracted.

The method statements shall identify hold points and invoke:

i) Work instructions;

ii) Quality control procedures;

iii) Risk assessments;

iv) Compliance testing / inspection arrangements;

v) Any work acceptance procedures;

vi) For all activities that might affect the quality of the permanent and temporary works.

4.2.3. Identify the relevant construction procedures in the Contractor's own Quality Management System (and provide copies on request).

4.3 Contractor's Construction Quality Control

This section of the Quality Plan shall include:

4.3.1. Statement of the Contractor's organisation for quality control.

The quality plan shall identify procedures (which may be a part of the Contractor's general procedures) that cover the topics listed below. Copies of these procedures shall be made available to the Engineer on request.

4.3.2. Arrangements for 'receiving' and 'in-process' testing.

4.3.3. Control of test laboratories.

4.3.4. Control of test, measuring and inspection equipment.

4.3.5 Document control.

4.3.6. Procedure for monitoring and recording the inspection, test and approval status of the constructed/installed work.

4.3.7. Procedures for test and inspections for the purpose of the Contractor certifying that prior to covering up, each part of the Works are complete and conform to the Contract.

4.3.8. Procedure for the review of work submitted for review but not accepted as conforming to the Contract

4.3.9. Procedure for the collation of quality records as identified in BS EN ISO 9002, and provision of copies when requested by the Engineer.

4.4 Suppliers' Quality Plans

The Quality Plan shall include:

4.4.1. Definition of the product or service to be provided.

4.4.2. The organisation of the Supplier describing the line of command and stating the name of the senior manager responsible for the contracted Work and the names of the Supplier's on-site management representative. Contact addresses, telephone numbers etc. shall be provided.

4.4.3.* Identification of the relevant parts of the Supplier's quality system relevant to the product or service being provided. (Copies to be provided to the Engineer on request).

4.4.4. The control of personnel selection (at works and on site), including special requirements for skilled personnel, e.g. certification of welders, training of operatives, experience requirements etc.

Specific procedures for the following:

4.5.5.* Receipt and examination of certificates of conformity and test results for purchased products.

4.5.6.* Product identification and traceability.

4.5.7.* Handling, storage, packaging and delivery to Site and storage and handling on Site.

4.5.8 Quality records.

Note: Items marked * where available and appropriate, copies of the supplier’s quality system / general procedures may be acceptable

5 CONTRACTOR ACCREDITATIONS / MEMBERSHIP CRITERIA

The Contractor will also have accreditations / membership of the following:

Highways Electrical Registration Scheme (HERS) to NHSS8
National Electrical Registration Scheme (NERS)
National Inspection Council for Electrical Installation Contracting (NICEIC)
Construction line
Contractors Health and Safety Scheme (CHAS)

STANDARD SPECIFICATION AND CODE OF PRACTICE

Where an appropriate British Standard Specification or British Standard Code of Practice, issued by the British Standards Institution, is current at the date of tender, the Contractor is required to ensure that all goods and materials used or supplied and all workmanship shall be at least in accordance with that Standard.

APPENDIX 2/3 – RETENTION OF MATERIALS ARISING FROM SITE CLEARANCE

The Contractor shall comply with the following additional conditions on the retention of materials arising from the site clearance of road lighting units, lit traffic signs, traffic signs and associated equipment during the currency of the Contract.

(i) The following materials are to be removed from site and transported to, and stored at the Clients Depot for re-use on the Contract as instructed by the Engineer on the works order:-

(a) Steel road lighting columns, brackets and traffic sign posts

(b) Road Lighting Luminaires

(c) Feeder Pillars

(d) Lit/non-lit traffic bollards including bases

(e) Lit sign external luminaires

(f) Traffic Sign Plates (various sizes)

(g) Festive & Summer Illuminations

APPENDIX 2/5 – HAZARDOUS MATERIALS

MATERIALS HANDLING

Documents Referred To.

Department of Environment, environmental Protection Act 1990.
Waste Management The Duty of Care. A Code of Practice.

1. Waste materials such as lamps and capacitors shall be disposed of in a safe manner in accordance with current regulations to ensure that substances which may be contained therein shall not be hazardous to health.

APPENDIX 5/2 – SERVICE DUCT REQUIREMENTS

1. Ducts for road lighting shall be in accordance with HCD drawing No: I2 and the following:-

   a) All ducts shall be of the Unplasticised polyvinyl-chloride (UPVC). Ducts shall be orange in colour, and ribbed, and be identified by means of continuous durable marking along the length with the following wording “STREET LIGHTING”.

   b) The average depth to invert 700mm in carriageway and 450mm in verges and footways.

   e) The ground level shall be taken at existing ground and depth of duct and all measurements shall be taken from this datum.

APPENDIX 6/70 – EARTHWORKS SCHEDULE

1. HARD MATERIALS

These shall be as defined and consist of the following:-

a) existing pavements
b) footways
c) paved areas

The units and depth of this material are shown on the Reinstatement Schedule contained in Appendix 7/2.

2. UNACCEPTABLE MATERIALS

These shall be any unbound material forming part of any of the above constructions, the limits and depths are as shown on the Reinstatement Schedules contained in Appendix 7/2.

APPENDIX 7/2 – EXCAVATION, TRIMMING AND REINSTATEMENT OF EXISTING SURFACES

1. All permanent reinstatements of carriageways and of footways shall be carried out in accordance with the Highways Authorities & Utilities Committee Specification for the Reinstatement of Openings in Highways published by the Stationary Office (Formerly H.M.S.O) and dated April 2010 (3rd Edition).

2. Reinstatements shall be carried out as instructed by the Engineer and will be detailed on the Works order. Details of completed reinstatements will be supplied to the Engineer. Details will include location, measure and date of each reinstatement carried out.

3. When agreed with the Engineer a temporary reinstatement may be carried out but this must be permanently reinstated within 10 days where the works do not involve the reconstruction of footways.

3. The temporary reinstatement shall be with the same material removed from the site during excavation and after defining shall be compacted in layers to within 50mm of the finished surface, the void is then to be filled with a layer of cold lay blacktop material of nominal size 20mm.

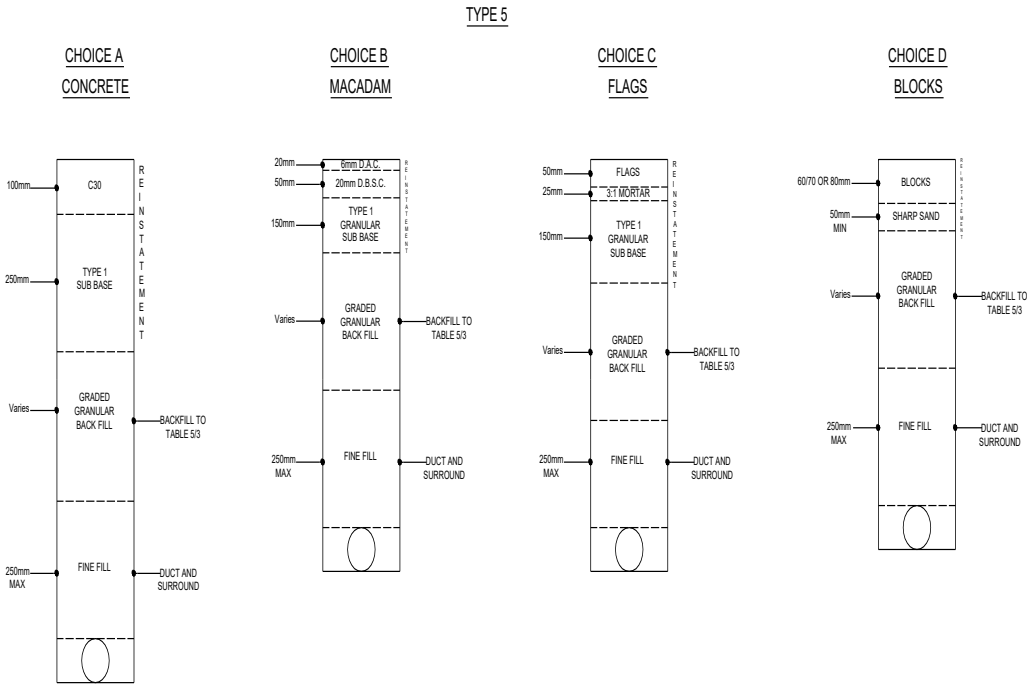

The vertical faces of the adjoining road surfacing must be treated with an approved bitumastic material before laying the wearing course. On new installations, neither the apparatus nor the fine fill may encroach into the sub base.

APPENDIX 12/70 – ROUTINE MAINTENANCE OF TRAFFIC SIGNS, BOLLARDS AND BEACONS

1. SCHEDULE OF LIT TRAFFIC SIGNS, BOLLARDS AND BEACONS

(a) The 'Schedule of Lit Traffic Signs, Bollards and Beacons' in Appendix 12/70 is a summary of the main inventory of illuminated traffic signs, bollards and beacons and is for information only. Full schedules will be made available to the successful Contractor.

(b) The information on the main inventory is constantly updated from information supplied by the maintenance Contractor and the District Network Operator and regular updates of the inventory schedules will be supplied to the Contractor.

2. RECORD OF EQUIPMENT INSTALLED

(a) A comprehensive survey has been carried out to record all lit traffic signs, bollard and beacon equipment owned and operated by the Local Authority.

(b) The Contractor shall be responsible for providing "As Built" plans and Schematics for all changes and/or additions to the lit traffic signs, bollards and beacons as they occur, and also updating the Council's Asset Register on the mobile device.

(c) Lit Traffic Sign, Bollard and Beacon Data shall be updated on the Asset Register for all:-

New Units
Removed Units
Resited Units
Changes to - Posts, brackets, lamp type and/or wattage, luminaires, controls, burning hours, supply, numbering.

(d) The Contractor shall notify the Engineer within 5 working days of units which are ready to be disconnected or require servicing.

(e) The computer inventory can be interrogated to produce summaries under various headings for all information contained on the computer. This information will be available from the Engineer on request.

3. ISSUING OF INSTRUCTIONS TO THE CONTRACTOR (WORKS ORDERS)

(a) The Engineer will issue the Contractor with a Works order for routine maintenance programmes.

(b) On completion of the operations listed on the works order the Contractor shall return the signed and dated works order to the Engineer listing any additional operation numbers for labour and/or materials used.

APPENDIX 12/70 (CONT'D) - ROUTINE MAINTENANCE OF TRAFFIC SIGNS, BOLLARDS AND BEACONS

CLIENT EXISTING APPARATUS

SCHEDULE OF LIT SIGNS/BOLLARDS & BEACONS (FOR INFORMATION ONLY)

ASSET TYPE	LAMP TYPE	QUANTITY
ILLUMINATED SIGN	MCFU	202
ILLUMINATED SIGN	LED	1021
BELISHA BEACON	LED	48
REFUGE BEACON	LED	26
ILLUMINATED BOLLARD	LED	108

APPENDIX 12/71 - MAINTENANCE OF TRAFFIC SIGNS, BOLLARDS AND BEACONS

1. The Contractor shall comply fully with the requirements of Clause 1 to 3 of Appendix 12/70 in respect of all works undertaken as additional maintenance of traffic signs.

CONTRACTOR RESPONSE TIMES

ACTIVITY	ACTION TO BE TAKEN BY CONTRACTOR
Electrical Test	Inspect and test all cable networks which are the responsibility of the Engineer in accordance with BS7671 and return the Works order to the Engineer within 30 working days of the works being issued.
Standby Callout	Notify the Engineer on the Contractor Callout form by email, by 08:30 hours the following day. If it is following an R.T.C. and requires DNO attendance to disconnect, notify the Engineer by telephone immediately during normal working hours, or NELC Security Service out of normal working hours.

2. ISSUING OF INSTRUCTIONS TO THE CONTRACTOR (WORKS ORDERS)

(a) The Engineer will issue the Contractor with a Works order on a weekly basis for additional maintenance.

(b) On completion of the operations listed on the works order the Contractor shall return the signed and dated works order to the Engineer listing any additional operation numbers for labour and/or materials used.

APPENDIX 13/70 – MAINTENANCE OF STREET LIGHTING UNITS

1. SCHEDULE OF LIGHTING POINTS

(a) Details of the Schedules forming part of Appendix 13/70 will form part of the Contract.

(b) The 'Schedule of Lighting Points' is a summary of the main inventory of lighting points and is for information only.

(c) The information on the main inventory is constantly updated from information supplied by the maintenance Contractor.

2. RECORD OF EQUIPMENT INSTALLED

(a) A comprehensive survey has been carried out to record all street lighting equipment owned and operated by the Council.

(b) Records are held in the form of a computer inventory.

(c) The Contractor shall be responsible for providing "As Built" plans and Schematics for all changes and/or additions to the street lighting systems as they occur.

3. DATA COLLECTION

(a) The Engineer may instruct the Contractor to undertake any over and above data collection at the specified dayworks rate.

(b) A cable schematic of each individual cable network showing each individual lit traffic sign, lit traffic bollard and street lighting unit will also be produced by the Contractor.

5. ISSUING OF INSTRUCTIONS TO THE CONTRACTOR (WORKS ORDERS)

(a) The Engineer will issue the Contractor with a Works order contained in Appendix 13/71 on a weekly basis for maintenance programmes.

(b) On completion of the operations listed on the works order the Contractor shall return the signed and dated works order to the Engineer listing any additional operation numbers for labour and/or materials used.

Client EXISTING LIGHTING APPARATUS

LAMP WATTAGE	LAMP TYPE	QUANTITY
50W	SON-T	12
70W	SON-T	60
100W	SON-T	10
150W	SON-T	13
250W	SON-T	13
70W	CDM-T	2
150W	CDM-T	21
36W	SOX-E	1
9W	LED	5987
11W	LED	4
16W	LED	16
17W	LED	253
19W	LED	163
21W	LED	52
22W	LED	10293
24W	LED	49
25W	LED	28
26W	LED	34
27W	LED	118
28W	LED	94
29W	LED	16
31W	LED	13
36W	LED	50
37W	LED	43
38W	LED	4816
39W	LED	28
40W	LED	37
42W	LED	7
43W	LED	81
44W	LED	26
46W	LED	1
48W	LED	14
53W	LED	1196
57W	LED	12
61W	LED	38
62W	LED	12
64W	LED	167
69W	LED	2
72W	LED	12
87W	LED	15
89W	LED	25
94W	LED	2
99W	LED	14
112W	LED	7
116W	LED	33
119W	LED	54
126W	LED	13
132W	LED	13
158W	LED	106
163W	LED	8
164W	LED	6
179W	LED	11
266W	LED	13
		24031 (TOTAL)

APPENDIX 13/71 – ADDITIONAL MAINTENANCE OF STREET LIGHTING UNITS

1. The Contractor shall comply fully with the requirements of Clause 1 to 3 of Appendix 13/70 in respect of all works undertaken as additional maintenance of street lighting columns and the following.

CONTRACTOR RESPONSE TIME

ACTIVITY	ACTION TO BE TAKEN BY CONTRACTOR
Electrical Test	Inspect and test all cable networks which are the responsibility of the Engineer in accordance with BS7671 and return the Works order to the Engineer within 30 working days of the works being issued.

2. ISSUING OF INSTRUCTION TO THE CONTRACTOR (WORKS ORDERS)

(a) The Engineer will issue the Contractor with a Works order on a weekly basis for additional maintenance.

(b) On completion of the operations listed on the works order the Contractor shall return the signed and dated works order to the Engineer listing any additional operation numbers for labour and/or materials used.

RULES FOR WORKING IN THE VICINITY OF NORTHERN POWERGRID OWNED EQUIPMENT

1. Cut Outs

1.1 When a cut-out fuse has been removed for the purpose of work or testing on the outgoing side of a Northern Powergrid owned cut out, the live exposed phase terminal on the incoming side shall be shrouded with Northern Powergrid approved insulating material and shall so for such time as the cut out cover is removed.

1.2 Under NO circumstances shall a cut out be disconnected from the Northern Powergrid supply cable.

1.3 Northern Powergrid cut outs shall not be left unattended when columns or the furniture housings have been removed, unless they have been protected against unauthorised interference by a substantial temporary housing suitably marked to warn of live apparatus.

1.4 Only HRC fuselinks approved by Northern Powergrid shall be used in Northern Powergrid cut-out fuse carriers.

1.5 Northern Powergrid must be notified without delay of any danger, repair requirement or suspected defect in their equipment. No attempt should be made to interfere with Northern Powergrid equipment which is damaged or suspected to be faulty.

2. **LAMPS ON OVERHEAD LINE SUPPORTS**

2.1 The initial erection of furniture and fittings on Northern Powergrid posts and supports must be carried out by Northern Powergrid staff.

2.2 Northern Powergrid must be notified without delay of any danger, repair requirement or suspected defect in their equipment. No attempt should be made to interfere with Northern Powergrid equipment which is damaged or suspected to be faulty.

2.3 Adequate earthing of metalwork of a street lighting fitting is not to be assumed and is to be regarded as live until proven otherwise.

2.4 Wood poles must be sounded and prodded for the detection of any decay before being climbed; wood poles marked with a “D” symbol or otherwise suspected to be unsound shall not be climbed by ladder or climbing irons.

2.5 No person shall work on a pole or support unless in visual range of a second person.

2.6 No metal ladder, or ladder with metal stile reinforcement, shall be used on Northern Powergrid poles or supports.

2.7 Nothing must be done to conceal or obliterate a “D” symbol on a pole.

2.8 Work must be conducted in such a manner that no part of the body, working tool or any part of the working platform is within a distance of 1.0m of any exposed overhead conductor operating at up to 650 volts. Northern Powergrid will undertake any work necessary on such installation where 1.0m clearance cannot be observed, where the bracket level is level with, or above, the overhead line.

2.9 When working on columns in the vicinity of overhead lines operating above 650 volts, a minimum safe working clearance of 3.0m between any part of the body or tool or equipment and the overhead line must be maintained at all times. No part of working platforms used in the vicinity of overhead lines operation above 650 volts must be raised to a height greater than 1.0m below the top of the column. The platform must be kept as close to the column as practicable.
Where hinged columns are installed in the vicinity of overhead lines, operatives must not ascend to the top of the column which is in the raised position unless, on account of special circumstances, authority in writing is forst obtained.

NOTE: NO OTHER WORK OTHER THAN THAT AUTHORISED OVERLEAF WILL BE CARRIED OUT AT ANY TIME

Authority	**Authorising Authority**
North Lincolnshire Council Assets and Development Unit 8/9 Billet Lane Scunthorpe North Lincolnshire DN15 9YH	North Lincolnshire Council Assets and Development Unit 8/9 Billet Lane Scunthorpe North Lincolnshire DN15 9YH

Name of Employee:-

Appointment of Person Authorised to Work on Street Lighting and Street Furniture Services connected to Northern Powergrid Low Voltage Network	SERIAL NO: **NLC/001/R**

Having been trained for the purpose, the above named employee is hereby authorised to undertake the following categories of work in accordance with the Engineering Recommendations No: G39, and Northern Powergrid Engineering Memorandum No: ESD 13.04

AUTHORISATION TO WORK ON NORTHERN POWERGRID LOW-VOLTAGE UNDERGROUND SERVICE TERMINATIONS

1. Removal and replacement of Northern Powergrid cut-out fuse.

2. Initial Insertion of Northern Powergrid cut-out fuse and connection of Authority’s wiring.

3. Disconnection and reconnection of Authority’s wiring from outgoing side of Northern Powergrid cut-out.

AUTHORISATION TO WORK ON NORTHERN POWERGRID LOW-VOLTAGE OVERHEAD LINES

1. Removal and replacement of Northern Powergrid cut-out fuse.

2. Initial Insertion of Northern Powergrid cut-out fuse and connection of Authority’s wiring.

3. Disconnection and reconnection of Authority’s wiring from outgoing side of Northern Powergrid cut-out.

CONFIRMATION OF COMPETENCE ISSUED BY THE CONTRACTOR

I confirm that the above named person is competent to be authorised to carry out the duties listed above.

Name:- Signature:

Position:- Date:

RECEIVED BY:- (Competent Person)

Name:- Signature:

Position:- Date:

AUTHORISED BY:- (AUTHORITIES Authorising Officer)

Name:- Signature:

The AUTHORITIES Authorising Officer Date:

EXPIRY DATE: This certificate is valid until:-

A copy of this certificate SHALL be carried by the Competent Person when employed on these duties and the rules outlined in Appendix III MUST be adhered to during such operations.

APPENDIX 14/1 – SITE RECORDS

As-built drawings shall be produced by the Contractor on a pdf or word document for the lighting and lit traffic sign installation on request of the Engineer. These completed drawings shall be in accordance with the following :-

(a) They shall incorporate the maintenance or operating manuals for installed equipment;

(b) All apparatus subject to a public view record must be surveyed on site with the location measurements (i.e. the position of apparatus relative to features appearing on the base map) being measured and recorded to an accuracy of +/- 0.1 metre. Sufficient measurements must be taken on site to represent accurately the line of the apparatus.

(c) The site records shall include details of all road lighting columns, lit traffic sign units, lit traffic bollards and pedestrian refuge and/or crossing beacons.

(d) Cable schematics shall be provided for each feeder pillar/feeder column and shall show in schematic form the following information:

i) each individual circuit;

ii) individual cable size and configuration;

iii) all columns, lit traffic signs, lit traffic bollards per circuit;

iv) all columns, lit traffic signs, lit traffic bollards shall be identified by their individual painted identification number/letter – all feeder pillars/feeder columns to be numbered with suffix ie “FP”.

v) All cable joints.

Lot 2 NLC Asset Register'

asset_id	asset_number	easting	northing	street	area	commissioned_date	glr_area	et_area	siting	lamp_type	lamp_wattage	gear_type	charge_code	circuit_watts	switch_regime	burning_hours	control_charge_code	control_circuit_watts	beacon_manufacturer	beacon_material	beacon_type	lamp_quantity	cell_type
1	2000	503561.8	421751.1	BARROW ROAD	Barton upon Humber Parish		2	5	SPLITTER ISLAND	LED	19	NOT APPLICABLE	7946016000100	10	1	8766	0	0	FOREST CITY	FIBREGLASS	CENTRE ISLAND COLUMN	1	CONTINUOUS
1	2000	488239.57	410748.68	CHURCH LANE	Scunthorpe		3	6	SPLITTER ISLAND	LED	19	NOT APPLICABLE	7946016000100	10	1	8766	0	0	FOREST CITY	FIBREGLASS	CENTRE ISLAND COLUMN	1	CONTINUOUS
1	2000	504213.76	422079.5	FALKLAND WAY	Barton upon Humber Parish		2	5	SPLITTER ISLAND	LED	19	NOT APPLICABLE	7946016000100	10	1	8766	0	0	FOREST CITY	FIBREGLASS	CENTRE ISLAND COLUMN	1	CONTINUOUS
3	2002	487527.6	412780.61	LUNEBURG WAY	Scunthorpe		3	2	SPLITTER ISLAND	LED	19	NOT APPLICABLE	7946016000100	10	1	8766	0	0	FOREST CITY	FIBREGLASS	CENTRE ISLAND COLUMN	1	CONTINUOUS
2	2001	487457.59	412418.53	LUNEBURG WAY	Scunthorpe		3	2	SPLITTER ISLAND	LED	19	NOT APPLICABLE	7946016000100	10	1	8766	0	0	FOREST CITY	FIBREGLASS	CENTRE ISLAND COLUMN	1	CONTINUOUS
1	2000	487474.16	412369.46	LUNEBURG WAY	Scunthorpe		3	2	SPLITTER ISLAND	LED	19	NOT APPLICABLE	7946016000100	10	1	8766	0	0	FOREST CITY	FIBREGLASS	CENTRE ISLAND COLUMN	1	CONTINUOUS
1	2000	495637.92	407943.2	ERMINE STREET	Broughton Parish		1	1	SPLITTER ISLAND	LED	19	NOT APPLICABLE	7946016000100	10	1	8766	0	0	FOREST CITY	FIBREGLASS	CENTRE ISLAND COLUMN	1	CONTINUOUS
3	2000	487954.81	409472.79	WEST COMMON LANE	Scunthorpe		4	5	SPLITTER ISLAND	LED	19	NOT APPLICABLE	7946016000100	10	1	8766	0	0	FOREST CITY	FIBREGLASS	CENTRE ISLAND COLUMN	1	CONTINUOUS
1	2000	500821.29	407809.1	WRAWBY ROAD	Brigg Parish	13/03/2024 00:00	3	2	SPLITTER ISLAND	LED	19	NOT APPLICABLE	7946016000100	10	1	8766	0	0	SIMMONS	FIBREGLASS	CENTRE ISLAND COLUMN	1	CONTINUOUS
2	2001	500883.53	407854.28	WRAWBY ROAD	Brigg Parish		3	2	SPLITTER ISLAND	LED	19	NOT APPLICABLE	7946016000100	10	1	8766	0	0	FOREST CITY	FIBREGLASS	CENTRE ISLAND COLUMN	1	CONTINUOUS
2	2000	498823.36	406818.91	SCAWBY ROAD	Scawby Parish		2	2	SPLITTER ISLAND	LED	19	NOT APPLICABLE	7946016000100	10	1	8766	0	0	FOREST CITY	FIBREGLASS	CENTRE ISLAND COLUMN	1	CONTINUOUS
1	2002	484279.37	411176.28	DONCASTER ROAD	Gunness Parish	16/01/2018 00:00	2	2	CENTRAL RESERVATION	LED	10	STANDARD	7946016001100	10	1	8766	0	0	SIMMONS	PLASTIC	CENTRE ISLAND COLUMN	1	CONTINUOUS
2	2001	504200.35	422177.82	FALKLAND WAY	Barton upon Humber Parish	13/09/2022 00:00	2	5	SPLITTER ISLAND	LED	19	STANDARD	7946016000100	10	1	8766	0	0	SIMMONS	PLASTIC	CENTRE ISLAND COLUMN	1	CONTINUOUS
1	2000	501386.42	408312.75	BARTON ROAD	Wrawby Parish		4	6	CENTRAL RESERVATION	LED	10	NOT APPLICABLE	7946016000100	10	1	8766	0	0	SIMMONS	PLASTIC	CENTRE ISLAND COLUMN	1	CONTINUOUS
3	2002	489100.69	411781.17	FRODINGHAM ROAD	Scunthorpe		4	4	FRONT OF PATH	LED	33	NOT APPLICABLE	7948033000100	33	1	8766	0	0	SIMMONS	PLASTIC	FLASHING BEACON	1	CONTINUOUS
2	2001	489133.8	411629.3	FRODINGHAM ROAD	Scunthorpe	01/04/2015 00:00	4	4	FRONT OF PATH	LED	33	NOT APPLICABLE	7948033000100	33	1	8766	0	0	SIMMONS	PLASTIC	FLASHING BEACON	1	CONTINUOUS
1	2000	500284.34	407145.92	BIGBY STREET	Brigg Parish		3	2	FRONT OF PATH	LED	33	NOT APPLICABLE	7948033000100	33	1	8766	0	0	SIMMONS	PLASTIC	FLASHING BEACON	1	CONTINUOUS
2	2001	500275.66	407158.83	BIGBY STREET	Brigg Parish	01/04/2013 00:00	3	2	FRONT OF PATH	LED	33	NOT APPLICABLE	7948033000100	33	1	8766	0	0	SIMMONS	PLASTIC	FLASHING BEACON	1	CONTINUOUS
1	2000	478038.6	403792.2	BURNHAM ROAD	Epworth Parish	01/04/2012 00:00	3	5	FRONT OF PATH	LED	33	NOT APPLICABLE	7948033000100	33	1	8766	0	0	SIMMONS	PLASTIC	FLASHING BEACON	1	CONTINUOUS
2	2001	478033	403794.8	BURNHAM ROAD	Epworth Parish	01/04/2012 00:00	3	5	FRONT OF PATH	LED	33	NOT APPLICABLE	7948033000100	33	1	8766	0	0	SIMMONS	PLASTIC	FLASHING BEACON	1	CONTINUOUS
1	2000	489127.1	411625.5	FRODINGHAM ROAD	Scunthorpe	01/04/2015 00:00	4	4	FRONT OF PATH	LED	33	NOT APPLICABLE	7948033000100	33	1	8766	0	0	SIMMONS	PLASTIC	FLASHING BEACON	1	CONTINUOUS
4	2003	489107.36	411785.37	FRODINGHAM ROAD	Scunthorpe		4	4	FRONT OF PATH	LED	33	NOT APPLICABLE	7948033000100	33	1	8766	0	0	SIMMONS	PLASTIC	FLASHING BEACON	1	CONTINUOUS
1	2000	496879.6	405225	WEST STREET	Scawby Parish		2	2	FRONT OF PATH	LED	33	NOT APPLICABLE	7948033000100	33	1	8766	0	0	SIMMONS	PLASTIC	FLASHING BEACON	1	CONTINUOUS
2	2001	496887.2	405224.4	WEST STREET	Scawby Parish	01/04/2013 00:00	2	2	FRONT OF PATH	LED	33	NOT APPLICABLE	7948033000100	33	1	8766	0	0	SIMMONS	PLASTIC	FLASHING BEACON	1	CONTINUOUS
2	2000	489274.04	411469.81	WEST STREET	Scunthorpe	01/04/2013 00:00	4	4	FRONT OF PATH	LED	33	NOT APPLICABLE	7948033000100	33	1	8766	0	0	SIMMONS	PLASTIC	FLASHING BEACON	1	CONTINUOUS
1	2001	489279.56	411462.85	WEST STREET	Scunthorpe	01/04/2013 00:00	4	4	FRONT OF PATH	LED	33	NOT APPLICABLE	7948033000100	33	1	8766	0	0	SIMMONS	PLASTIC	FLASHING BEACON	1	CONTINUOUS
1	2000	489804.34	410637.35	COTTAGE BECK ROAD	Scunthorpe	01/04/2013 00:00	4	2	FRONT OF PATH	LED	33	NOT APPLICABLE	7948033000100	33	1	8766	0	0	SIMMONS	PLASTIC	FLASHING BEACON	1	CONTINUOUS
2	2001	489807.8	410626.71	COTTAGE BECK ROAD	Scunthorpe	01/04/2013 00:00	4	2	FRONT OF PATH	LED	33	NOT APPLICABLE	7948033000100	33	1	8766	0	0	SIMMONS	PLASTIC	FLASHING BEACON	1	CONTINUOUS
1	2000	503171.47	421853.94	MARKET PLACE	Barton upon Humber Parish		2	5	FRONT OF PATH	LED	33	NOT APPLICABLE	7948033000100	33	1	8766	0	0	SIMMONS	PLASTIC	FLASHING BEACON	1	CONTINUOUS
2	2001	503167.7	421844.27	MARKET PLACE	Barton upon Humber Parish		2	5	FRONT OF PATH	LED	33	NOT APPLICABLE	7948033000100	33	1	8766	0	0	SIMMONS	PLASTIC	FLASHING BEACON	1	CONTINUOUS
1	2000	489431	411240	MARY STREET	Scunthorpe	01/04/2013 00:00	4	4	BACK OF FOOTPATH	LED	33	NOT APPLICABLE	7948033000100	33	1	8766	0	0	SIMMONS	PLASTIC	FLASHING BEACON	1	CONTINUOUS
2	2001	489426.7	411250.2	MARY STREET	Scunthorpe	01/04/2013 00:00	4	4	BACK OF FOOTPATH	LED	33	NOT APPLICABLE	7948033000100	33	1	8766	0	0	SIMMONS	PLASTIC	FLASHING BEACON	1	CONTINUOUS
3	2002	489338.54	411224.85	MARY STREET	Scunthorpe	01/04/2013 00:00	4	4	BACK OF FOOTPATH	LED	33	NOT APPLICABLE	7948033000100	33	1	8766	0	0	SIMMONS	PLASTIC	FLASHING BEACON	1	CONTINUOUS
4BB	2003	489335.49	411235.02	MARY STREET	Scunthorpe	01/04/2013 00:00	4	4	FRONT OF PATH	LED	33	NOT APPLICABLE	7948033000100	33	1	8766	0	0	SIMMONS	PLASTIC	FLASHING BEACON	1	CONTINUOUS
1BB	2000	489117.35	412145.98	OLD CROSBY	Scunthorpe	01/04/2013 00:00	4	4	ON POLE	LED	33	NOT APPLICABLE	7948033000100	33	1	8766	0	0	SIMMONS	PLASTIC	FLASHING BEACON	1	CONTINUOUS
2BB	2001	489120.38	412137.96	OLD CROSBY	Scunthorpe	01/04/2013 00:00	4	4	FRONT OF PATH	LED	33	NOT APPLICABLE	7948033000100	33	1	8766	0	0	SIMMONS	PLASTIC	FLASHING BEACON	1	CONTINUOUS
2	2002	488251.8	409447.5	WEST COMMON LANE	Scunthorpe	01/04/2013 00:00	4	5	BACK OF FOOTPATH	LED	33	STANDARD	7948033000100	33	1	8766	0	0	SIMMONS	PLASTIC	FLASHING BEACON	1	CONTINUOUS
1	2001	499269.44	406971.62	SCAWBY ROAD	Scawby Parish	28/08/2024 00:00	2	2	SPLITTER ISLAND	LED	19	NOT APPLICABLE	7946016000100	10	1	8766	0	0	SIMMONS	PLASTIC	MODUCIC REFUGE BEACC	1	CONTINUOUS
3	2002	491737.6	408335.7	LAKESIDE PARKWAY	Scunthorpe	01/04/2014 00:00	2	3	FRONT OF PATH	LED	33	NOT APPLICABLE	7948033000100	33	1	8766	0	0	SIMMONS	PLASTIC	FLASHING BEACON	1	CONTINUOUS
4	2003	491745.7	408335.7	LAKESIDE PARKWAY	Scunthorpe	01/04/2014 00:00	2	3	FRONT OF PATH	LED	33	NOT APPLICABLE	7948033000100	33	1	8766	0	0	SIMMONS	PLASTIC	FLASHING BEACON	1	CONTINUOUS
1	2000	489850.44	411233.92	LINDUM STREET	Scunthorpe	01/04/2013 00:00	4	4	FRONT OF PATH	LED	33	NOT APPLICABLE	7948033000100	33	1	8766	0	0	SIMMONS	PLASTIC	FLASHING BEACON	1	CONTINUOUS
2	2001	489853.11	411225.91	LINDUM STREET	Scunthorpe	01/04/2013 00:00	4	4	FRONT OF PATH	LED	33	NOT APPLICABLE	7948033000100	33	1	8766	0	0	SIMMONS	PLASTIC	FLASHING BEACON	1	CONTINUOUS
1BB	2000	493876.9	398749.3	SOUTH CLIFF ROAD	Kirton in Lindsey Parish	01/04/2016 00:00	3	1	FRONT OF PATH	LED	33	NOT APPLICABLE	7948033000100	33	1	8766	0	0	SIMMONS	PLASTIC	FLASHING BEACON	1	CONTINUOUS
2BB	2001	493867.9	398749.1	SOUTH CLIFF ROAD	Kirton in Lindsey Parish	01/04/2016 00:00	3	1	FRONT OF PATH	LED	33	NOT APPLICABLE	7948033000100	33	1	8766	0	0	SIMMONS	PLASTIC	FLASHING BEACON	1	CONTINUOUS
1	2000	487255.55	411443.73	SCOTTER ROAD	Scunthorpe	01/04/2013 00:00	3	2	FRONT OF PATH	LED	33	NOT APPLICABLE	7948033000100	33	1	8766	0	0	SIMMONS	PLASTIC	FLASHING BEACON	1	CONTINUOUS
2	2001	487246.41	411444.27	SCOTTER ROAD	Scunthorpe	01/04/2013 00:00	3	2	FRONT OF PATH	LED	33	NOT APPLICABLE	7948033000100	33	1	8766	0	0	SIMMONS	PLASTIC	FLASHING BEACON	1	CONTINUOUS
1	2000	489420.28	410888.96	STATION ROAD	Scunthorpe	01/04/2013 00:00	4	4	FRONT OF PATH	LED	33	NOT APPLICABLE	7948033000100	33	1	8766	0	0	SIMMONS	PLASTIC	FLASHING BEACON	1	CONTINUOUS
2	2001	489425.98	410880.54	STATION ROAD	Scunthorpe	01/04/2013 00:00	4	4	FRONT OF PATH	LED	33	NOT APPLICABLE	7948033000100	33	1	8766	0	0	SIMMONS	PLASTIC	FLASHING BEACON	1	CONTINUOUS
1	2000	489591.95	411636.67	WELLS STREET	Scunthorpe	06/12/2017 00:00	4	4	FRONT OF PATH	LED	33	NOT APPLICABLE	7948033000100	33	1	8766	0	0	SIMMONS	PLASTIC	FLASHING BEACON	1	CONTINUOUS
2	2001	489585.25	411628.03	WELLS STREET	Scunthorpe		4	4	FRONT OF PATH	LED	33	NOT APPLICABLE	7948033000100	33	1	8766	0	0	SIMMONS	PLASTIC	FLASHING BEACON	1	CONTINUOUS
1	2000	489446.71	408634.8	ASHBY HIGH STREET	Scunthorpe		3	1	FRONT OF PATH	LED	33	NOT APPLICABLE	7948033000100	33	1	8766	0	0	SIMMONS	PLASTIC	FLASHING BEACON	1	CONTINUOUS
2	2001	489446.71	408645.94	ASHBY HIGH STREET	Scunthorpe	01/04/2013 00:00	3	1	FRONT OF PATH	LED	33	NOT APPLICABLE	7948033000100	33	1	8766	0	0	SIMMONS	PLASTIC	FLASHING BEACON	1	CONTINUOUS
1	2000	491753.23	408486.22	LAKESIDE PARKWAY	Scunthorpe	01/04/2013 00:00	2	3	FRONT OF PATH	LED	33	NOT APPLICABLE	7948033000100	33	1	8766	0	0	SIMMONS	PLASTIC	FLASHING BEACON	1	CONTINUOUS
2	2001	491742.87	408485.31	LAKESIDE PARKWAY	Scunthorpe	01/04/2013 00:00	2	3	FRONT OF PATH	LED	33	NOT APPLICABLE	7948033000100	33	1	8766	0	0	SIMMONS	PLASTIC	FLASHING BEACON	1	CONTINUOUS
1	2000	502955	421980.7	HOLYDYKE	Barton upon Humber Parish	01/04/2016 00:00	2	5	FRONT OF PATH	LED	33	NOT APPLICABLE	7948033000100	33	1	8766	0	0	SIMMONS	PLASTIC	FLASHING BEACON	1	CONTINUOUS
2	2001	502950.4	421973.4	HOLYDYKE	Barton upon Humber Parish	01/04/2016 00:00	2	5	FRONT OF PATH	LED	33	NOT APPLICABLE	7948033000100	33	1	8766	0	0	SIMMONS	PLASTIC	FLASHING BEACON	1	CONTINUOUS
1	2001	488252.8	409434.4	WEST COMMON LANE	Scunthorpe	01/04/2013 00:00	4	5	FRONT OF PATH	LED	33	STANDARD	7948033000100	33	1	8766	0	0	SIMMONS	PLASTIC	MIDUSTAR BEACON	1	CONTINUOUS
1	2001	478554.3	407157.95	HIGH STREET	Belton Parish	11/03/2022 00:00	3	5	FRONT OF PATH	LED	33	STANDARD	7948033000100	33	1	8766	0	0	SIMMONS	PLASTIC	MIDUBEL BEACON	1	CONTINUOUS
2	2000	478563.2	407156.67	HIGH STREET	Belton Parish	11/03/2022 00:00	3	5	FRONT OF PATH	LED	33	STANDARD	7948033000100	33	1	8766	0	0	SIMMONS	PLASTIC	MIDUBEL BEACON	1	CONTINUOUS
1	2000	487570.28	406819.71	SCOTTER ROAD SOUTH	Bottesford Parish	23/12/2024 00:00	1	3	SPLITTER ISLAND	LED	19	NOT APPLICABLE	7946016000100	10	1	8766	0	0	OTHER	STEEL	CENTRE ISLAND COLUMN	1	CONTINUOUS
1	2000	510054.38	414654.5	WEST END ROAD	Ulceby Parish		1	3	CENTRAL RESERVATION	LED	19	NOT APPLICABLE	7946016000100	10	1	8766	0	0	OTHER	STEEL	CENTRE ISLAND COLUMN	1	CONTINUOUS
1	2001	510022.79	414641.4	WEST END ROAD	Ulceby Parish		1	3	CENTRAL RESERVATION	LED	19	NOT APPLICABLE	7946016000100	10	1	8766	0	0	OTHER	STEEL	CENTRE ISLAND COLUMN	1	CONTINUOUS
1	2000	507540.96	421209.76	BECK LANE	Barrow upon Humber Parish		1	4	SPLITTER ISLAND	LED	19	NOT APPLICABLE	7946016000100	10	1	8766	0	0	OTHER	STEEL	CENTRE ISLAND COLUMN	1	CONTINUOUS
2	2001	490363.97	411024.13	BRIGG ROAD	Scunthorpe		4	4	CENTRAL RESERVATION	LED	19	NOT APPLICABLE	7946016000100	10	1	8766	0	0	OTHER	STEEL	CENTRE ISLAND COLUMN	1	CONTINUOUS
2	2000	484262.36	411088.84	DONCASTER ROAD	Gunness Parish		2	2	CENTRAL RESERVATION	LED	19	NOT APPLICABLE	7946016000100	10	1	8766	0	0	OTHER	STEEL	CENTRE ISLAND COLUMN	1	CONTINUOUS
3	2001	484258.08	410989.39	DONCASTER ROAD	Gunness Parish		2	2	CENTRAL RESERVATION	LED	19	NOT APPLICABLE	7946016000100	10	1	8766	0	0	OTHER	STEEL	CENTRE ISLAND COLUMN	1	CONTINUOUS
1	2000	489203.67	411080.29	OSWALD ROAD	Scunthorpe		4	4	CENTRAL RESERVATION	LED	19	NOT APPLICABLE	7946016000100	10	1	8766	0	0	OTHER	STEEL	CENTRE ISLAND COLUMN	1	CONTINUOUS
1	2000	488181.18	408505.89	BURRINGHAM ROAD	Scunthorpe	18/12/2024 00:00	4	3	SPLITTER ISLAND	LED	19	NOT APPLICABLE	7946016000100	10	1	8766	0	0	SIMMONS	STEEL	CENTRE ISLAND COLUMN	1	CONTINUOUS
1	2000	507115.86	420750.06	THORNTON STREET	Barrow upon Humber Parish		1	4	SPLITTER ISLAND	LED	19	NOT APPLICABLE	7946016000100	10	1	8766	0	0	OTHER	STEEL	CENTRE ISLAND COLUMN	1	CONTINUOUS
1	2000	510032.86	414657.99	WOOTTON ROAD	Ulceby Parish		1	3	CENTRAL RESERVATION	LED	19	NOT APPLICABLE	7946016000100	10	1	8766	0	0	OTHER	STEEL	CENTRE ISLAND COLUMN	1	CONTINUOUS
1	2000	489820.9	411303.65	FENTON STREET	Scunthorpe	01/04/2013 00:00	4	4	FRONT OF PATH	LED	19	NOT APPLICABLE	7946016000100	10	1	8766	0	0	OTHER	STEEL	FLASHING BEACON	1	CONTINUOUS
2	2001	489828.53	411299.26	FENTON STREET	Scunthorpe	01/04/2013 00:00	4	4	FRONT OF PATH	LED	19	NOT APPLICABLE	7946016000100	10	1	8766	0	0	OTHER	STEEL	FLASHING BEACON	1	CONTINUOUS
1BB	2000	489319.67	411353.47	HIGH STREET	Scunthorpe		4	4	FRONT OF PATH	LED	19	NOT APPLICABLE	7946016000100	10	1	8766	0	0	OTHER	STEEL	FLASHING BEACON	1	CONTINUOUS
2BB	2001	489323.44	411344.66	HIGH STREET	Scunthorpe		4	4	FRONT OF PATH	LED	19	NOT APPLICABLE	7946016000100	10	1	8766	0	0	OTHER	STEEL	FLASHING BEACON	1	CONTINUOUS

asset_ id	asset_ number	easting	northing	street	area	commissioned_date	glr_ area	et_ area	siting	lamp_ type	lamp_ wattage	gear_type	charge_code	circuit_ watts	switch_ regime	burning _ hours	control_ charge_ code	control_ circuit_ watts	bollard_ manufacturer	bollard_material	bollard_siting	bollard_ face_ size	bollard_ aspect_1	bollard_ aspect_2	lamp_ quantity	cell_type
1	6000	505008.58	411129.79	C121 BETWEEN BARNETBY TOP AND ELSHAM	Elsham Parish		1	6	SPLITTER ISLAND	LED	8	ELECTRICAL EXPRESS	4000080001100	8	808	4098	0	0	FOREST CITY	FLEXIBLE PLASTIC	SPLITTER ISLAND	600	610	NON	1	PHOTO ELECTRIC CELL
5Y	6008	489852.82	409132.22	LINCOLN GARDENS	Scunthorpe		4	2	SPLITTER ISLAND	LED	7	GLASDON	4000050012100	5	100	5600	9600010003100	0.33	HALE	METAL	SPLITTER ISLAND	270	NOT APPLICABLE	NON	1	PHOTO ELECTRIC CELL
CTB6	6002	489208.97	408952.48	ASHBY ROAD	Scunthorpe		4	2	SPLITTER ISLAND	LED	7	GLASDON	4000050012100	5	100	5600	9600010003100	0.33	SIMMONS	RIGID PLASTIC	SPLITTER ISLAND	270	610(R)	NON	1	PHOTO ELECTRIC CELL
2	6001	488454.6	414121.8	PARK FARM ROAD	Scunthorpe		4	4	SPLITTER ISLAND	LED	8	ELECTRICAL EXPRESS	4000080001100	8	808	4098	9400010001100	0.60	SIMMONS	RIGID PLASTIC	SPLITTER ISLAND	270	610	NON	1	PHOTO ELECTRIC CELL
CTB3	6005	489122.27	409414.72	ASHBY ROAD	Scunthorpe		4	2	SPLITTER ISLAND	LED	7	GLASDON	4000050012100	5	100	5600	9600010003100	0.33	SIMMONS	RIGID PLASTIC	SPLITTER ISLAND	270	610(R)	NON	1	PHOTO ELECTRIC CELL
2	6000	489187.82	410618.93	BRUMBY WOOD LANE	Scunthorpe		3	6	SPLITTER ISLAND	LED	7	GLASDON	4000050012100	5	100	5600	9600010003100	0.33	SIMMONS	RIGID PLASTIC	SPLITTER ISLAND	270	610	NON	1	PHOTO ELECTRIC CELL
7	6011	489160.66	409885.53	ASHBY ROAD	Scunthorpe		4	2	SPLITTER ISLAND	LED	7	GLASDON	4000050012100	5	100	5600	9600010003100	0.33	SIMMONS	RIGID PLASTIC	SPLITTER ISLAND	270	610	NON	1	PHOTO ELECTRIC CELL
6	6012	489160.39	409893.16	ASHBY ROAD	Scunthorpe		4	2	SPLITTER ISLAND	LED	7	GLASDON	4000050012100	5	100	5600	9600010003100	0.33	SIMMONS	RIGID PLASTIC	SPLITTER ISLAND	270	610	NON	1	PHOTO ELECTRIC CELL
9	6008	488505.32	409408.58	WEST COMMON LANE	Scunthorpe		4	5	SPLITTER ISLAND	LED	7	GLASDON	4000050012100	5	100	5600	9600010003100	0.33	SIMMONS	RIGID PLASTIC	SPLITTER ISLAND	270	610	NON	1	PHOTO ELECTRIC CELL
10	6009	488503.12	409408.9	WEST COMMON LANE	Scunthorpe		4	5	SPLITTER ISLAND	LED	7	GLASDON	4000050012100	5	100	5600	9600010003100	0.33	SIMMONS	RIGID PLASTIC	SPLITTER ISLAND	270	610	NON	1	PHOTO ELECTRIC CELL
11	6010	488489.06	409408.13	WEST COMMON LANE	Scunthorpe		4	5	SPLITTER ISLAND	LED	7	GLASDON	4000050012100	5	100	5600	9600010003100	0.33	SIMMONS	RIGID PLASTIC	SPLITTER ISLAND	270	610	NON	1	PHOTO ELECTRIC CELL
12	6011	488479.6	409405.61	WEST COMMON LANE	Scunthorpe		4	5	SPLITTER ISLAND	LED	7	GLASDON	4000050012100	5	100	5600	9600010003100	0.33	SIMMONS	RIGID PLASTIC	SPLITTER ISLAND	270	610	NON	1	PHOTO ELECTRIC CELL
15	6012	487958.1	409472.16	WEST COMMON LANE	Scunthorpe		4	5	SPLITTER ISLAND	LED	7	GLASDON	4000050012100	5	100	5600	9600010003100	0.33	SIMMONS	RIGID PLASTIC	SPLITTER ISLAND	270	610	NON	1	PHOTO ELECTRIC CELL
16	6013	487953.13	409472.52	WEST COMMON LANE	Scunthorpe		4	5	SPLITTER ISLAND	LED	7	GLASDON	4000050012100	5	100	5600	9600010003100	0.33	SIMMONS	RIGID PLASTIC	SPLITTER ISLAND	270	610	NON	1	PHOTO ELECTRIC CELL
19	6016	487525.53	409431.29	WEST COMMON LANE	Scunthorpe		4	5	SPLITTER ISLAND	LED	7	GLASDON	4000050012100	5	100	5600	9600010003100	0.33	SIMMONS	RIGID PLASTIC	SPLITTER ISLAND	270	610	NON	1	PHOTO ELECTRIC CELL
20	6017	487521.98	409431.64	WEST COMMON LANE	Scunthorpe		4	5	SPLITTER ISLAND	LED	7	GLASDON	4000050012100	5	100	5600	9600010003100	0.33	SIMMONS	RIGID PLASTIC	SPLITTER ISLAND	270	610	NON	1	PHOTO ELECTRIC CELL
21	6018	487336.49	409444.31	WEST COMMON LANE	Scunthorpe		4	5	SPLITTER ISLAND	LED	7	GLASDON	4000050012100	5	100	5600	9600010003100	0.33	SIMMONS	RIGID PLASTIC	SPLITTER ISLAND	270	610	NON	1	PHOTO ELECTRIC CELL
22	6019	487331.52	409444.22	WEST COMMON LANE	Scunthorpe		4	5	SPLITTER ISLAND	LED	7	GLASDON	4000050012100	5	100	5600	9600010003100	0.33	SIMMONS	RIGID PLASTIC	SPLITTER ISLAND	270	610	NON	1	PHOTO ELECTRIC CELL
23	6020	487310.36	409443.91	WEST COMMON LANE	Scunthorpe		4	5	SPLITTER ISLAND	LED	7	GLASDON	4000050012100	5	100	5600	9600010003100	0.33	SIMMONS	RIGID PLASTIC	SPLITTER ISLAND	270	610	NON	1	PHOTO ELECTRIC CELL
24	6021	487306.45	409443.91	WEST COMMON LANE	Scunthorpe		4	5	SPLITTER ISLAND	LED	7	GLASDON	4000050012100	5	100	5600	9600010003100	0.33	SIMMONS	RIGID PLASTIC	SPLITTER ISLAND	270	610	NON	1	PHOTO ELECTRIC CELL
40	6019	491752.7	408702.99	BRIGG ROAD	Scunthorpe		4	4	SPLITTER ISLAND	LED	7	GLASDON	4000050012100	5	100	5600	9600010003100	0.33	SIMMONS	FLEXIBLE PLASTIC	SPLITTER ISLAND	270	610	NON	1	PHOTO ELECTRIC CELL
14	6012	487362.4	408683.73	SCOTTER ROAD	Scunthorpe		3	2	SPLITTER ISLAND	LED	7	GLASDON	4000050012100	5	100	5600	9600010003100	0.33	SIMMONS	FLEXIBLE PLASTIC	SPLITTER ISLAND	270	NOT APPLICABLE	NON	1	PHOTO ELECTRIC CELL
X4	6008	490345.98	409805.82	EAST COMMON LANE	Scunthorpe		2	3	SPLITTER ISLAND	LED	7	GLASDON	4000050012100	5	100	5600	9600010003100	0.33	SIMMONS	RIGID PLASTIC	SPLITTER ISLAND	270	610	NON	1	PHOTO ELECTRIC CELL
8	6011	489928.07	409542.78	QUEENSWAY	Scunthorpe		4	2	CENTRAL RESERVATION	LED	7	GLASDON	4000050012100	5	100	5600	9600010003100	0.33	SIMMONS	FLEXIBLE PLASTIC	CENTRAL RES	270	NOT APPLICABLE	NON	1	PHOTO ELECTRIC CELL
1X	6000	489516.48	409053.38	LINCOLN GARDENS	Scunthorpe		4	2	SPLITTER ISLAND	LED	7	GLASDON	4000050012100	5	100	5600	9600010003100	0.33	SIMMONS	RIGID PLASTIC	SPLITTER ISLAND	270	610	NON	1	PHOTO ELECTRIC CELL
2X	6001	489506	409033.74	LINCOLN GARDENS	Scunthorpe		4	2	SPLITTER ISLAND	LED	7	GLASDON	4000050012100	5	100	5600	9600010003100	0.33	SIMMONS	RIGID PLASTIC	SPLITTER ISLAND	270	610	NON	1	PHOTO ELECTRIC CELL
3	6000	486290.93	413064.63	FERRY ROAD WEST	Flixborough Parish		1	2	SPLITTER ISLAND	LED	8	ELECTRICAL EXPRESS	4000080001100	8	808	4098	9400010001100	0.60	SIMMONS	FLEXIBLE PLASTIC	SPLITTER ISLAND	600	610	NON	1	PHOTO ELECTRIC CELL
2	6001	486244.89	413134.25	FERRY ROAD WEST	Flixborough Parish		1	2	SPLITTER ISLAND	LED	8	ELECTRICAL EXPRESS	4000080001100	8	808	4098	9400010001100	0.60	SIMMONS	FLEXIBLE PLASTIC	SPLITTER ISLAND	600	610	NON	1	PHOTO ELECTRIC CELL
3X	6002	489520.84	409023.26	LINCOLN GARDENS	Scunthorpe		4	2	SPLITTER ISLAND	LED	7	GLASDON	4000050012100	5	100	5600	9600010003100	0.33	SIMMONS	RIGID PLASTIC	SPLITTER ISLAND	270	610	NON	1	PHOTO ELECTRIC CELL
4X	6003	489533.5	409043.34	LINCOLN GARDENS	Scunthorpe		4	2	SPLITTER ISLAND	LED	7	GLASDON	4000050012100	5	100	5600	9600010003100	0.33	SIMMONS	RIGID PLASTIC	SPLITTER ISLAND	270	610	NON	1	PHOTO ELECTRIC CELL
1Y	6004	489868.53	409116.94	LINCOLN GARDENS	Scunthorpe		4	2	SPLITTER ISLAND	LED	7	GLASDON	4000050012100	5	100	5600	9600010003100	0.33	SIMMONS	RIGID PLASTIC	SPLITTER ISLAND	270	610	NON	1	PHOTO ELECTRIC CELL
2Y	6005	489853.69	409101.67	LINCOLN GARDENS	Scunthorpe		4	2	SPLITTER ISLAND	LED	7	GLASDON	4000050012100	5	100	5600	9600010003100	0.33	SIMMONS	RIGID PLASTIC	SPLITTER ISLAND	270	610	NON	1	PHOTO ELECTRIC CELL
1	6000	510052.22	414653.33	WEST END ROAD	Ulceby Parish		1	3	CENTRAL RESERVATION	LED	7	GLASDON	4000050012100	5	100	5600	9600010003100	0.33	SIMMONS	FLEXIBLE PLASTIC	CENTRAL RES	270	610	NON	1	PHOTO ELECTRIC CELL
2	6001	510056.15	414655.2	WEST END ROAD	Ulceby Parish		1	3	CENTRAL RESERVATION	LED	7	GLASDON	4000050012100	5	100	5600	9600010003100	0.33	SIMMONS	FLEXIBLE PLASTIC	CENTRAL RES	270	610	NON	1	PHOTO ELECTRIC CELL
2	6002	510019.65	414639.99	WEST END ROAD	Ulceby Parish		1	3	CENTRAL RESERVATION	LED	7	GLASDON	4000050012100	5	100	5600	9600010003100	0.33	SIMMONS	FLEXIBLE PLASTIC	CENTRAL RES	270	610	NON	1	PHOTO ELECTRIC CELL
3Y	6006	489837.98	409112.14	LINCOLN GARDENS	Scunthorpe		4	2	SPLITTER ISLAND	LED	7	GLASDON	4000050012100	5	100	5600	9600010003100	0.33	SIMMONS	RIGID PLASTIC	SPLITTER ISLAND	270	610	NON	1	PHOTO ELECTRIC CELL
4Y	6007	489841.03	409126.55	LINCOLN GARDENS	Scunthorpe		4	2	SPLITTER ISLAND	LED	7	GLASDON	4000050012100	5	100	5600	9600010003100	0.33	SIMMONS	RIGID PLASTIC	SPLITTER ISLAND	270	610	NON	1	PHOTO ELECTRIC CELL
1	6003	510024.82	414642.45	WEST END ROAD	Ulceby Parish		1	3	CENTRAL RESERVATION	LED	7	GLASDON	4000050012100	5	100	5600	9600010003100	0.33	SIMMONS	FLEXIBLE PLASTIC	CENTRAL RES	270	610	NON	1	PHOTO ELECTRIC CELL
1	6000	505478.97	410004.98	RAILWAY STREET	Barnetby Le Wold Parish		2	3	SPLITTER ISLAND	LED	7	GLASDON	4000050012100	5	100	5600	9600010003100	0.33	SIMMONS	RIGID PLASTIC	SPLITTER ISLAND	270	610	NON	1	PHOTO ELECTRIC CELL
2	6000	486203.1	413075.63	NEAP HOUSE ROAD	Gunness Parish		1	2	SPLITTER ISLAND	LED	8	ELECTRICAL EXPRESS	4000080001100	8	808	4098	9400010001100	0.60	SIMMONS	FLEXIBLE PLASTIC	SPLITTER ISLAND	600	610	NON	1	PHOTO ELECTRIC CELL
1	6000	511066.4	410860	B1210 FROM A18 TO COUNTY BOUNDARY	Kirmington Parish		2	3	SPLITTER ISLAND	LED	8	ELECTRICAL EXPRESS	4000080001100	8	808	4098	9400010001100	0.60	SIMMONS	FLEXIBLE PLASTIC	SPLITTER ISLAND	270	610	NON	1	PHOTO ELECTRIC CELL
2	6001	511058.2	410858.8	B1210 FROM A18 TO COUNTY BOUNDARY	Kirmington Parish		2	3	SPLITTER ISLAND	LED	8	ELECTRICAL EXPRESS	4000080001100	8	808	4098	9400010001100	0.60	SIMMONS	FLEXIBLE PLASTIC	SPLITTER ISLAND	270	610	NON	1	PHOTO ELECTRIC CELL
X4	6007	487531	412149	FERRY ROAD	Scunthorpe		4	4	CENTRAL RESERVATION	LED	5	GLASDON	4000050012100	5	100	5600	9600010003100	0.33	SIMMONS	RIGID PLASTIC	CENTRAL RES	600	606	NOT APPLICABLE	1	PHOTO ELECTRIC CELL
1	6000	491780.13	408645.94	MORTAL ASH HILL	Scunthorpe		2	3	CENTRAL RESERVATION	LED	7	GLASDON	4000050012100	5	100	5600	9600010003100	0.33	SIMMONS	FLEXIBLE PLASTIC	SPLITTER ISLAND	270	610	NON	1	PHOTO ELECTRIC CELL
2	6000	489371.61	404180.04	BRIGG ROAD	Messingham Parish		1	4	SPLITTER ISLAND	LED	7	GLASDON	4000050012100	5	100	5600	9600010003100	0.33	SIMMONS	FLEXIBLE PLASTIC	SPLITTER ISLAND	270	610	NON	1	PHOTO ELECTRIC CELL
1	6001	489374.72	404180.1	BRIGG ROAD	Messingham Parish		1	4	SPLITTER ISLAND	LED	7	GLASDON	4000050012100	5	100	5600	9600010003100	0.33	SIMMONS	FLEXIBLE PLASTIC	SPLITTER ISLAND	270	610	NON	1	PHOTO ELECTRIC CELL
2	6000	491747.57	408592.7	LAKESIDE PARKWAY	Scunthorpe		2	3	SPLITTER ISLAND	LED	7	GLASDON	4000050012100	5	100	5600	9600010003100	0.33	SIMMONS	FLEXIBLE PLASTIC	SPLITTER ISLAND	270	610	NON	1	PHOTO ELECTRIC CELL
6	6002	488696.41	412906.43	PHOENIX PARKWAY	Scunthorpe		4	4	SPLITTER ISLAND	LED	7	GLASDON	4000050012100	5	808	4098	0	0	SIMMONS	FLEXIBLE PLASTIC	CENTRAL RES	270	610	NON	1	PHOTO ELECTRIC CELL
1	6000	493855.75	407401.3	KIRTON ROAD	Holme Parish		4	1	SPLITTER ISLAND	LED	8	ELECTRICAL EXPRESS	4000080001100	8	808	4098	9400010001100	0.60	SIMMONS	FLEXIBLE PLASTIC	SPLITTER ISLAND	600	610	NON	1	PHOTO ELECTRIC CELL
1	6000	510034	414654.5	WOOTTON ROAD	Ulceby Parish		1	3	CENTRAL RESERVATION	LED	7	GLASDON	4000050012100	5	100	5600	9600010003100	0.33	SIMMONS	FLEXIBLE PLASTIC	CENTRAL RES	270	610	NON	1	PHOTO ELECTRIC CELL
2	6001	510031.36	414662.52	WOOTTON ROAD	Ulceby Parish		1	3	CENTRAL RESERVATION	LED	7	GLASDON	4000050012100	5	100	5600	9600010003100	0.33	SIMMONS	FLEXIBLE PLASTIC	CENTRAL RES	270	610	NON	1	PHOTO ELECTRIC CELL
X1	6004	487536	412131	FERRY ROAD	Scunthorpe		4	4	CENTRAL RESERVATION	LED	5	GLASDON	4000050012100	5	100	5600	9600010003100	0.33	SIMMONS	RIGID PLASTIC	CENTRAL RES	600	606	NOT APPLICABLE	1	PHOTO ELECTRIC CELL
X2	6005	487512	412128	FERRY ROAD	Scunthorpe		4	4	CENTRAL RESERVATION	LED	5	GLASDON	4000050012100	5	100	5600	9600010003100	0.33	SIMMONS	FLEXIBLE PLASTIC	CENTRAL RES	600	606	NOT APPLICABLE	1	PHOTO ELECTRIC CELL
X3	6006	487514	412147	FERRY ROAD	Scunthorpe		4	4	CENTRAL RESERVATION	LED	5	GLASDON	4000050012100	5	100	5600	9600010003100	0.33	SIMMONS	RIGID PLASTIC	CENTRAL RES	600	606	NOT APPLICABLE	1	PHOTO ELECTRIC CELL
2	6001	503564.87	421751.37	BARROW ROAD	Barton upon Humber Parish		2	5	SPLITTER ISLAND	LED	7	GLASDON	4000050012100	5	100	5600	9600010003100	0.33	TRIPLEX	RIGID PLASTIC	SPLITTER ISLAND	270	610	NON	1	PHOTO ELECTRIC CELL
1	6000	503560.17	421750.74	BARROW ROAD	Barton upon Humber Parish		2	5	SPLITTER ISLAND	LED	7	GLASDON	4000050012100	5	100	5600	9600010003100	0.33	TRIPLEX	RIGID PLASTIC	SPLITTER ISLAND	270	610	NON	1	PHOTO ELECTRIC CELL
3	6002	488243.41	410748.8	CHURCH LANE	Scunthorpe		3	6	SPLITTER ISLAND	LED	7	GLASDON	4000050012100	5	100	5600	9600010003100	0.33	TRIPLEX	RIGID PLASTIC	SPLITTER ISLAND	270	610	NON	1	PHOTO ELECTRIC CELL
4	6003	488237.53	410748.15	CHURCH LANE	Scunthorpe		3	6	SPLITTER ISLAND	LED	7	GLASDON	4000050012100	5	100	5600	9600010003100	0.33	TRIPLEX	RIGID PLASTIC	SPLITTER ISLAND	270	610	NON	1	PHOTO ELECTRIC CELL
10	6001	489226.44	408901.65	ASHBY ROAD	Scunthorpe		4	2	SPLITTER ISLAND	LED	8	ELECTRICAL EXPRESS	4000080001100	8	808	4098	9400010001100	0.60	TRIPLEX	RIGID PLASTIC	SPLITTER ISLAND	600	610	NON	1	PHOTO ELECTRIC CELL
1	6000	503122.6	421855.11	BRIGG ROAD	Barton upon Humber Parish		2	5	SPLITTER ISLAND	LED	7	GLASDON	4000050012100	5	100	5600	9600010003100	0.33	TRIPLEX	RIGID PLASTIC	SPLITTER ISLAND	270	610	NON	1	PHOTO ELECTRIC CELL
2	6001	503120.68	421852.22	BRIGG ROAD	Barton upon Humber Parish		2	5	SPLITTER ISLAND	LED	7	GLASDON	4000050012100	5	100	5600	9600010003100	0.33	TRIPLEX	RIGID PLASTIC	SPLITTER ISLAND	270	610	NON	1	PHOTO ELECTRIC CELL
5	6002	487993.14	410565.41	KINGSWAY	Scunthorpe		4	5	SPLITTER ISLAND	LED	8	ELECTRICAL EXPRESS	4000080001100	8	808	4098	9400010001100	0.60	TRIPLEX	RIGID PLASTIC	SPLITTER ISLAND	600	610	NON	1	PHOTO ELECTRIC CELL
6	6003	487976.48	410591.22	KINGSWAY	Scunthorpe		4	5	SPLITTER ISLAND	LED	8	ELECTRICAL EXPRESS	4000080001100	8	808	4098	9400010001100	0.60	TRIPLEX	RIGID PLASTIC	SPLITTER ISLAND	600	610	NON	1	PHOTO ELECTRIC CELL
11	6000	489228.82	408890.06	ASHBY ROAD	Scunthorpe		4	2	SPLITTER ISLAND	LED	8	ELECTRICAL EXPRESS	4000080001100	8	808	4098	9400010001100	0.60	TRIPLEX	RIGID PLASTIC	SPLITTER ISLAND	600	610	NON	1	PHOTO ELECTRIC CELL
CTB5	6003	489204.22	408964.07	ASHBY ROAD	Scunthorpe		4	2	SPLITTER ISLAND	LED	7	GLASDON	4000050012100	5	100	5600	9600010003100	0.33	TRIPLEX	RIGID PLASTIC	SPLITTER ISLAND	270	610(R)	NON	1	PHOTO ELECTRIC CELL
CTB4	6004	489145.41	409233.41	ASHBY ROAD	Scunthorpe		4	2	SPLITTER ISLAND	LED	7	GLASDON	4000050012100	5	100	5600	9600010003100	0.33	TRIPLEX	RIGID PLASTIC	SPLITTER ISLAND	270	610(R)	NON	1	PHOTO ELECTRIC CELL
8	6010	489167.59	409844.56	ASHBY ROAD	Scunthorpe		4	2	SPLITTER ISLAND	LED	7	GLASDON	4000050012100	5	100	5600	9600010003100	0.33	TRIPLEX	RIGID PLASTIC	SPLITTER ISLAND	270	610(R)	NON	1	PHOTO ELECTRIC CELL
1	6000	507542.02	421208.78	BECK LANE	Barrow upon Humber Parish		1	4	SPLITTER ISLAND	LED	7	GLASDON	4000050012100	5	100	5600	9600010003100	0.33	TRIPLEX	RIGID PLASTIC	SPLITTER ISLAND	270	610	NON	1	PHOTO ELECTRIC CELL
2	6001	507539.02	421211.79	BECK LANE	Barrow upon Humber Parish		1	4	SPLITTER ISLAND	LED	7	GLASDON	4000050012100	5	100	5600	9600010003100	0.33	TRIPLEX	RIGID PLASTIC	SPLITTER ISLAND	270	610	NON	1	PHOTO ELECTRIC CELL
5	6004	488651.52	409438.84	WEST COMMON LANE	Scunthorpe		4	5	SPLITTER ISLAND	LED	7	GLASDON	4000050012100	5	100	5600	9600010003100	0.33	TRIPLEX	RIGID PLASTIC	SPLITTER ISLAND	270	610	NON	1	PHOTO ELECTRIC CELL
6	6005	488648.69	409438.53	WEST COMMON LANE	Scunthorpe		4	5	SPLITTER ISLAND	LED	7	GLASDON	4000050012100	5	100	5600	9600010003100	0.33	TRIPLEX	RIGID PLASTIC	SPLITTER ISLAND	270	610	NON	1	PHOTO ELECTRIC CELL
7	6006	488534.9	409413.84	WEST COMMON LANE	Scunthorpe		4	5	SPLITTER ISLAND	LED	7	GLASDON	4000050012100	5	100	5600	9600010003100	0.33	TRIPLEX	RIGID PLASTIC	SPLITTER ISLAND	270	610	NON	1	PHOTO ELECTRIC CELL
8	6007	488531.75	409412.58	WEST COMMON LANE	Scunthorpe		4	5	SPLITTER ISLAND	LED	7	GLASDON	4000050012100	5	100	5600	9600010003100	0.33	TRIPLEX	RIGID PLASTIC	SPLITTER ISLAND	270	610	NON	1	PHOTO ELECTRIC CELL
1	6000	497281.85	400007.16	SCHOOL LANE	Redbourne Parish		1	1	SPLITTER ISLAND	LED	7	GLASDON	4000050012100	5	100	5600	9600010003100	0.33	TRIPLEX	RIGID PLASTIC	SPLITTER ISLAND	270	610	610	1	PHOTO ELECTRIC CELL
X3	6007	490332.9	409796.76	EAST COMMON LANE	Scunthorpe		2	3	SPLITTER ISLAND	LED	7	GLASDON	4000050012100	5	100	5600	9600010003100	0.33	TRIPLEX	RIGID PLASTIC	SPLITTER ISLAND	270	610	NON	1	PHOTO ELECTRIC CELL
18	6010	491311.31	408640.62	QUEENSWAY	Scunthorpe		4	2	CENTRAL RESERVATION	LED	8	ELECTRICAL EXPRESS	4000080001100	8	808	4098	9400010001100	0.60	TRIPLEX	FLEXIBLE PLASTIC	CENTRAL RES	600	610	NON	1	PHOTO ELECTRIC CELL
X1	6005	490354.03	409793.75	EAST COMMON LANE	Scunthorpe		2	3	SPLITTER ISLAND	LED	7	GLASDON	4000050012100	5	100	5600	9600010003100	0.33	TRIPLEX	RIGID PLASTIC	SPLITTER ISLAND	270	610	NON	1	PHOTO ELECTRIC CELL
X2	6006	490341.45	409784.19	EAST COMMON LANE	Scunthorpe		2	3	SPLITTER ISLAND	LED	7	GLASDON	4000050012100	5	100	5600	9600010003100	0.33	TRIPLEX	RIGID PLASTIC	SPLITTER ISLAND	270	610	NON	1	PHOTO ELECTRIC CELL
NONE	6005	501889.85	421562.47	FERRIBY ROAD	Barton upon Humber Parish		2	5	SPLITTER ISLAND	LED	7	GLASDON	4000050012100	5	100	5600	9600010003100	0.33	TRIPLEX	RIGID PLASTIC	SPLITTER ISLAND	270	610	NON	1	PHOTO ELECTRIC CELL
4	6000	493374.52	420407.85	WINTERTON ROAD	Winteringham Parish	01/12/2020 00:00	3	1	SPLITTER ISLAND	LED	7	GLASDON	4000050012100	5	100	5600	9600010003100	0.33	TRIPLEX	RIGID PLASTIC	SPLITTER ISLAND	270	610	NON	1	PHOTO ELECTRIC CELL
1	6001	493368.68	420374.18	WINTERTON ROAD	Winteringham Parish	01/12/2020 00:00	3	1	SPLITTER ISLAND	LED	7	GLASDON	4000050012100	5	100	5600	9600010003100	0.33	TRIPLEX	RIGID PLASTIC	SPLITTER ISLAND	270	610	NON	1	PHOTO ELECTRIC CELL
3	6002	493373.79	420410.92	WINTERTON ROAD	Winteringham Parish	01/12/2020 00:00	3	1	SPLITTER ISLAND	LED	7	ELECTRICAL EXPRESS	4000050012100	5	100	5600	9600010003100	0.33	TRIPLEX	RIGID PLASTIC	SPLITTER ISLAND	270	610	NON	1	PHOTO ELECTRIC CELL
2	6003	493369.8	420391.6	WINTERTON ROAD	Winteringham Parish	01/12/2020 00:00	3	1	SPLITTER ISLAND	LED	7	GLASDON	4000050012100	5	100	5600	9600010003100	0.33	TRIPLEX	RIGID PLASTIC	SPLITTER ISLAND	270	610	NON	1	PHOTO ELECTRIC CELL
1	6000	507114.26	420750.69	THORNTON STREET	Barrow upon Humber Parish		1	4	SPLITTER ISLAND	LED	8	ELECTRICAL EXPRESS	4000080001100	8	808	4098	9400010001100	0.60	TRIPLEX	RIGID PLASTIC	SPLITTER ISLAND	600	610	NON	1	PHOTO ELECTRIC CELL
2	6001	507117.47	420748.98	THORNTON STREET	Barrow upon Humber Parish		1	4	SPLITTER ISLAND	LED	8	ELECTRICAL EXPRESS	4000080001100	8	808	4098	9400010001100	0.60	TRIPLEX	RIGID PLASTIC	SPLITTER ISLAND	600	610	NON	1	PHOTO ELECTRIC CELL
1	6000	509357.47	412466.65	KIRMINGTON ROAD	Croxton Parish		2	3	SPLITTER ISLAND	LED	7	GLASDON	4000050012100	5	100	5600	9600010003100	0.33	TRIPLEX	FLEXIBLE PLASTIC	SPLITTER ISLAND	270	610	NON	1	PHOTO ELECTRIC CELL
2	6001	509360.42	412465.05	KIRMINGTON ROAD	Croxton Parish		2	3	SPLITTER ISLAND	LED	7	GLASDON	4000050012100	5	100	5600	9600010003100	0.33	TRIPLEX	FLEXIBLE PLASTIC	SPLITTER ISLAND	270	610	NON	1	PHOTO ELECTRIC CELL
1	6000	503298.41	421766.9	WHITECROSS STREET	Barton upon Humber Parish		2	5	SPLITTER ISLAND	LED	7	GLASDON	4000050012100	5	100	5600	9600010003100	0.33	TRIPLEX	RIGID PLASTIC	SPLITTER ISLAND	270	610	NON	1	PHOTO ELECTRIC CELL
1	6000	506679.81	421525.14	FERRY ROAD	Barrow upon Hum

asset_ id	asset_ number	easting	northing	street	area	commissioned_date	glr_ area_ name	et_ area_ name	pillar_ manufacturer_ name	pillar_material_name	pillar_type_name	pillar_siting_name	pillar_ jurisdiction _ name	pillar_colour_name	pillar_finish_name	pillar_ insulation_ name	cell_type_name	lockable_ dpi_ name	isolator_ manufacturer_ name	cable_ source_ owner_ value
FP1	4000	488707.35	413106.93	ATKINSONS WAY	Scunthorpe	05/12/2024 00:00	4	4	OTHER	GALVANISED STEEL	SINGLE DOOR	BACK OF PATH	NLC	OTHER	NOT APPLICABLE	FRAME ROOT	CONTINUOUS	NO	NONE	DNO
FP2	4001	484130.08	411563.76	OLD VILLAGE STREET	Gunness Parish		2	2	OTHER	GALVANISED STEEL	MINI PILLAR	BACK OF PATH	NLC	UNPAINTED	NOT APPLICABLE	FRAME ROOT	CONTINUOUS	YES	TOFCO	DNO
FP1	4000	484205.02	411417.81	OLD VILLAGE STREET	Gunness Parish		2	2	OTHER	GALVANISED STEEL	MINI PILLAR	BACK OF PATH	NLC	UNPAINTED	NOT APPLICABLE	FRAME ROOT	CONTINUOUS	YES	TOFCO	DNO
FP1	4000	500851.97	407006.19	BIGBY HIGH ROAD	Brigg Parish		3	2	OTHER	GALVANISED STEEL	SINGLE DOOR	VERGE	NLC	UNPAINTED	NOT APPLICABLE	FRAME ROOT	CONTINUOUS	YES	TOFCO	DNO
1	4000	487748.2	409870.2	BODMIN CLOSE	Scunthorpe		2	5	OTHER	GRP	TWO DOOR	BACK OF PATH	NLC	GREY	MATT	FRAME ROOT	CONTINUOUS	YES	UNKNOWN	DNO
FP1	4000	487639.57	407419.45	SOUTH PARK ROAD	Bottesford Parish		1	3	LUCY	GALVANISED STEEL	SINGLE DOOR	BACK OF PATH	NLC	UNPAINTED	NOT APPLICABLE	FRAME ROOT	CONTINUOUS	NO	NONE	DNO
1	4000	512356.27	414938.32	STATION ROAD	Ulceby Parish		1	3	OTHER	GRP	SINGLE DOOR	VERGE	NLC	GREY	MATT	FRAME ROOT	CONTINUOUS	YES	TOFCO	DNO
FP3	4000	508296.28	424007.39	BARROW ROAD	New Holland Parish		1	4	OTHER	PAINTED	SINGLE DOOR	VERGE	NLC	GREY	MATT	FRAME ROOT	CONTINUOUS	YES	CUT OUT	DNO
FP1	4000	486251.84	414439.32	BELLWIN DRIVE	Flixborough Parish		1	2	OTHER	GRP	TWO DOOR	VERGE	NLC	UNPAINTED	NOT APPLICABLE	FRAME ROOT	CONTINUOUS	YES	CUT OUT	DNO
FP2	4000	486927.95	412679.15	FERRY ROAD WEST	Flixborough Parish		1	2	LUCY	GALVANISED STEEL	SINGLE DOOR	VERGE	NLC	UNPAINTED	NOT APPLICABLE	FRAME ROOT	CONTINUOUS	YES	TOFCO	DNO
1	4000	497178.49	399818.14	HIGH STREET	Redbourne Parish		1	1	OTHER	GRP	SINGLE DOOR	VERGE	NLC	GREY	MATT	FRAME ROOT	CONTINUOUS	NO	NONE	DNO
1	4000	504516.03	413040.28	HALIFAX APPROACH	Elsham Parish		1	6	OTHER	PAINTED	SINGLE DOOR	VERGE	NLC	GREY	MATT	FRAME ROOT	CONTINUOUS	NO	NONE	DNO
1	4000	497296.92	399999.21	SCHOOL LANE	Redbourne Parish		1	1	OTHER	GALVANISED STEEL	SINGLE DOOR	VERGE	NLC	UNPAINTED	NOT APPLICABLE	FRAME ROOT	CONTINUOUS	UNKNOWN	UNKNOWN	UNKNOWN
FP1	4000	487536.24	412172.51	LUNEBURG WAY	Scunthorpe		3	2	OTHER	GRP	TWO DOOR	VERGE	NLC	GREEN	NOT APPLICABLE	FRAME ROOT	CONTINUOUS	YES	TOFCO	DNO
FP1	4000	489742.4	412201.53	WARREN ROAD	Scunthorpe		4	4	LUCY	PAINTED	SINGLE DOOR	BACK OF PATH	NLC	GREY	MATT	FRAME ROOT	CONTINUOUS	YES	TOFCO	DNO
FP1	4000	490093.74	412149.4	WINTERTON ROAD	Scunthorpe		4	4	OTHER	GALVANISED STEEL	SINGLE DOOR	BACK OF PATH	NLC	UNPAINTED	NOT APPLICABLE	FRAME ROOT	CONTINUOUS	YES	TOFCO	DNO
FP2	4002	489756.47	412791.34	MANNABERG WAY	Scunthorpe	18/12/2024 00:00	4	4	OTHER	GALVANISED STEEL	TWO DOOR	BACK OF PATH	NLC	UNPAINTED	NOT APPLICABLE	FRAME ROOT	CONTINUOUS	YES	TOFCO	HIGHWAYS
1	4000	492759.41	418523.27	MARKET STREET	Winterton Parish		1	1	LUCY	GALVANISED STEEL	SINGLE DOOR	FRONT OF PATH	PRI	UNPAINTED	NOT APPLICABLE	FRAME ROOT	CONTINUOUS	YES	TOFCO	UNKNOWN
FP1	4000	488351.52	414890.61	BLOOM LANE	Flixborough Parish		4	4	LUCY	GALVANISED STEEL	SINGLE DOOR	BACK OF PATH	NLC	UNPAINTED	NOT APPLICABLE	FRAME ROOT	CONTINUOUS	YES	TOFCO	DNO
FP6	4001	488861.84	414475.2	NORMANBY ROAD	Scunthorpe		4	4	LUCY	GALVANISED STEEL	SINGLE DOOR	BACK OF PATH	NLC	UNPAINTED	NOT APPLICABLE	FRAME ROOT	CONTINUOUS	YES	TOFCO	DNO
FP5	4002	489015.25	413911.04	NORMANBY ROAD	Scunthorpe		4	4	OTHER	CAST IRON	SINGLE DOOR	BACK OF PATH	NLC	GREEN	MATT	FRAME ROOT	CONTINUOUS	NO	NONE	HIGHWAYS
FP4	4003	489135.91	413541.77	NORMANBY ROAD	Scunthorpe	01/10/2019 00:00	4	4	OTHER	GALVANISED STEEL	TWO DOOR	VERGE	NLC	NOT APPLICABLE	NOT APPLICABLE	FRAME ROOT	CONTINUOUS	NO	NONE	DNO
FP3	4004	489307.48	412421.92	NORMANBY ROAD	Scunthorpe		4	4	LUCY	PAINTED	SINGLE DOOR	BACK OF PATH	NLC	GREY	NOT APPLICABLE	FRAME ROOT	CONTINUOUS	NO	NONE	DNO
FP2	4005	489283.46	412393.42	NORMANBY ROAD	Scunthorpe		4	4	LUCY	PAINTED	SINGLE DOOR	BACK OF PATH	NLC	GREY	NOT APPLICABLE	FRAME ROOT	CONTINUOUS	NO	NONE	DNO
FP1	4006	489338.23	412217.18	NORMANBY ROAD	Scunthorpe	27/02/2023 00:00	4	4	LUCY	GALVANISED STEEL	TWO DOOR	VERGE	NLC	UNPAINTED	NOT APPLICABLE	FRAME ROOT	CONTINUOUS	YES	TOFCO	DNO
FP3	4003	493690.04	407515.88	MORTAL ASH HILL	Holme Parish	08/08/2023 00:00	t Applica	Applica	OTHER	GALVANISED STEEL	TWO DOOR	VERGE	NLC	UNPAINTED	NOT APPLICABLE	FRAME ROOT	NOT APPLICABLE	YES	LUCY	DNO
FP1	4001	491820.86	408658.56	MORTAL ASH HILL	Scunthorpe		2	3	LUCY	GALVANISED STEEL	TWO DOOR	VERGE	NLC	UNPAINTED	NOT APPLICABLE	FRAME ROOT	NOT APPLICABLE	NOT APPLICABLE	CHARLES	DNO
FP1	4001	514285	415779	ULCEBY ROAD	South Killingholme Parish	01/04/2017 00:00	1	3	OTHER	GALVANISED STEEL	TWO DOOR	VERGE	NLC	NOT APPLICABLE	NOT APPLICABLE	FRAME ROOT	NOT APPLICABLE	YES	UNKNOWN	DNO
FP2	4001	514499	415891	EAST HALTON ROAD	South Killingholme Parish	01/04/2017 00:00	1	3	OTHER	GALVANISED STEEL	TWO DOOR	VERGE	NLC	NOT APPLICABLE	NOT APPLICABLE	FRAME ROOT	NOT APPLICABLE	YES	UNKNOWN	DNO
FP4	4001	514833	415757	HABROUGH ROAD	South Killingholme Parish	01/04/2017 00:00	1	3	OTHER	GALVANISED STEEL	TWO DOOR	VERGE	NLC	NOT APPLICABLE	NOT APPLICABLE	FRAME ROOT	NOT APPLICABLE	YES	TOFCO	DNO
FP2	4001	489743.83	409685.41	QUEENSWAY	Scunthorpe	15/02/2021 00:00	t Applica	Applica	OTHER	GALVANISED STEEL	SINGLE DOOR	VERGE	NLC	UNPAINTED	NOT APPLICABLE	FRAME ROOT	ZODIAN 35 LUX	YES	CHARLES	DNO
FP3	4002	490450.63	409084.73	QUEENSWAY	Scunthorpe	15/02/2021 00:00	t Applica	Applica	OTHER	GALVANISED STEEL	SINGLE DOOR	VERGE	NLC	UNPAINTED	NOT APPLICABLE	FRAME ROOT	ZODIAN 35 LUX	YES	CHARLES	DNO
FP5	4001	515401	416075	TOWN STREET	South Killingholme Parish	01/04/2017 00:00	1	3	OTHER	GALVANISED STEEL	SINGLE DOOR	VERGE	NLC	NOT APPLICABLE	NOT APPLICABLE	FRAME ROOT	NOT APPLICABLE	YES	TOFCO	DNO
FP8	4002	515179	416186	TOWN STREET	South Killingholme Parish	01/04/2017 00:00	1	3	OTHER	GALVANISED STEEL	TWO DOOR	VERGE	NLC	NOT APPLICABLE	NOT APPLICABLE	FRAME ROOT	NOT APPLICABLE	YES	TOFCO	DNO
FP8A	4003	515373	416168	TOWN STREET	South Killingholme Parish	01/04/2017 00:00	1	3	OTHER	GALVANISED STEEL	SINGLE DOOR	VERGE	NLC	NOT APPLICABLE	NOT APPLICABLE	FRAME ROOT	NOT APPLICABLE	YES	TOFCO	DNO
FP1	4000	488500.5	414718.8	WALDO WAY	Flixborough Parish		4	4	PUDSEY DIAMOND	GALVANISED STEEL	SINGLE DOOR	BACK OF PATH	NLC	UNPAINTED	NOT APPLICABLE	FRAME ROOT	CONTINUOUS	YES	TOFCO	DNO
FP1	4000	488383.37	414627.79	NISA WAY	Flixborough Parish		4	4	LUCY	GALVANISED STEEL	SINGLE DOOR	BACK OF PATH	NLC	UNPAINTED	NOT APPLICABLE	FRAME ROOT	CONTINUOUS	YES	TOFCO	DNO
FP3	4001	514560.19	416151.27	TOP ROAD	South Killingholme Parish	01/04/2017 00:00	1	3	OTHER	GALVANISED STEEL	SINGLE DOOR	VERGE	NLC	NOT APPLICABLE	NOT APPLICABLE	FRAME ROOT	NOT APPLICABLE	YES	TOFCO	DNO
FP1	4001	489954	411295	CARLTON STREET	Scunthorpe	01/04/2002 00:00	4	4	OTHER	GALVANISED STEEL	SINGLE DOOR	BACK OF PATH	NLC	NOT APPLICABLE	NOT APPLICABLE	FRAME ROOT	NOT APPLICABLE	NOT APPLICABLE	NOT APPLICABLE	DNO
FP2	4001	487920	410706	KINGSWAY	Scunthorpe	15/02/2021 00:00	4	5	OTHER	GALVANISED STEEL	SINGLE DOOR	VERGE	NLC	UNPAINTED	NOT APPLICABLE	FRAME ROOT	ZODIAN 35 LUX	YES	CHARLES	DNO
FP3	4002	487329.01	411179.09	KINGSWAY	Scunthorpe	15/02/2021 00:00	4	5	OTHER	GALVANISED STEEL	SINGLE DOOR	VERGE	NLC	UNPAINTED	NOT APPLICABLE	FRAME ROOT	ZODIAN 35 LUX	YES	CHARLES	DNO
FP1	4003	488513.62	409984.34	KINGSWAY	Scunthorpe	15/02/2021 00:00	4	5	OTHER	GALVANISED STEEL	SINGLE DOOR	VERGE	NLC	UNPAINTED	NOT APPLICABLE	FRAME ROOT	ZODIAN 35 LUX	YES	CHARLES	DNO
FP1	4000	488155.16	404288.94	NORTH MOOR LANE	Messingham Parish		1	4	LUCY	GALVANISED STEEL	SINGLE DOOR	VERGE	NLC	UNPAINTED	NOT APPLICABLE	FRAME ROOT	CONTINUOUS	YES	TOFCO	DNO
FP1	4000	488725.31	414986.55	RAMSDEN ROAD	Scunthorpe		4	4	LUCY	PAINTED	SINGLE DOOR	BACK OF PATH	NLC	GREY	NOT APPLICABLE	FRAME ROOT	CONTINUOUS	YES	TOFCO	DNO
FP1	4001	491186.21	408656.98	DUDLEY ROAD	Scunthorpe	24/02/2021 00:00	2	3	OTHER	GALVANISED STEEL	SINGLE DOOR	VERGE	NLC	UNPAINTED	NOT APPLICABLE	FRAME ROOT	ZODIAN 35 LUX	YES	CHARLES	DNO
FP6	4001	517011	416647	ROSPER ROAD	South Killingholme Parish	01/04/2017 00:00	1	3	OTHER	GALVANISED STEEL	TWO DOOR	VERGE	NLC	NOT APPLICABLE	NOT APPLICABLE	FRAME ROOT	NOT APPLICABLE	YES	TOFCO	DNO
FP7	4001	517286	416714	HUMBER ROAD	South Killingholme Parish	01/04/2017 00:00	1	3	OTHER	GALVANISED STEEL	TWO DOOR	VERGE	NLC	NOT APPLICABLE	NOT APPLICABLE	FRAME ROOT	NOT APPLICABLE	YES	TOFCO	DNO
FP1	4002	485538	411109	DONCASTER ROAD	Gunness Parish		2	2	OTHER	GRP	SINGLE DOOR	VERGE	NLC	GREEN	MATT	NOT APPLICABL	NOT APPLICABLE	NOT APPLICABLE	NOT APPLICABLE	DNO
7	4006	515498	416705	EASTFIELD ROAD	South Killingholme Parish		Not Applica	Applica	NOT APPLICABLE	NOT APPLICABLE	NOT APPLICABLE	NOT APPLICABLE	T APPLICAE	NOT APPLICABLE	NOT APPLICABLE	NOT APPLICABL	NOT APPLICABLE	NOT APPLICABLE	NOT APPLICABLE	NOT APPLICABLE
FP2	4001	483837	410620	A18 FROM A161 TO ALTHORPE	Keadby with Althorpe Parish		3	4	OTHER	GALVANISED STEEL	MINI PILLAR	VERGE	NLC	NOT APPLICABLE	NOT APPLICABLE	NOT APPLICABL	NOT APPLICABLE	NOT APPLICABLE	NOT APPLICABLE	NOT APPLICABLE
FP1	4001	503180	422204	CATHERINE STREET	Barton upon Humber Parish		2	5	OTHER	PAINTED	MINI PILLAR	BACK OF PATH	T APPLICAE	BLACK	MATT	NOT APPLICABL	NOT APPLICABLE	NOT APPLICABLE	NOT APPLICABLE	NOT APPLICABLE
FP1	4001	491517	409333	BRIGG ROAD	Scunthorpe		4	4	OTHER	CAST IRON	SINGLE DOOR	VERGE	NLC	GREEN	MATT	NOT APPLICABL	NOT APPLICABLE	NOT APPLICABLE	NOT APPLICABLE	UNKNOWN
FP1	4001	496360	406621	SCAWBY ROAD	Broughton Parish		1	1	NOT APPLICABLE	NOT APPLICABLE	NOT APPLICABLE	VERGE	T APPLICAE	NOT APPLICABLE	NOT APPLICABLE	NOT APPLICABL	NOT APPLICABLE	NOT APPLICABLE	NOT APPLICABLE	NOT APPLICABLE
FP1	4001	497116	399414	REDBOURNE MERE	Redbourne Parish		1	1	NOT APPLICABLE	NOT APPLICABLE	NOT APPLICABLE	NOT APPLICABLE	T APPLICAE	NOT APPLICABLE	NOT APPLICABLE	NOT APPLICABL	NOT APPLICABLE	NOT APPLICABLE	NOT APPLICABLE	NOT APPLICABLE
FP1	4000	494439.67	404961.34	MESSINGHAM LANE	Scawby Parish		2	2	LUCY	GALVANISED STEEL	SINGLE DOOR	BACK OF PATH	NLC	UNPAINTED	NOT APPLICABLE	PLANTED	CONTINUOUS	NO	NONE	DNO
1	4000	489626.87	411356.1	BELGRAVE SQUARE	Scunthorpe		4	4	LUCY	PAINTED	SINGLE DOOR	BACK OF PATH	NLC	GREY	MATT	PLANTED	CONTINUOUS	YES	TOFCO	DNO
1	4000	488905.55	410795.48	CHURCH LANE	Scunthorpe		3	6	LUCY	PAINTED	SINGLE DOOR	BACK OF PATH	NLC	GREY	MATT	PLANTED	CONTINUOUS	UNKNOWN	UNKNOWN	UNKNOWN
2	4001	488680.26	410769.3	CHURCH LANE	Scunthorpe		3	6	LUCY	PAINTED	SINGLE DOOR	BACK OF PATH	NLC	GREY	MATT	PLANTED	CONTINUOUS	UNKNOWN	UNKNOWN	UNKNOWN
1	4000	503130.81	422033.54	COTTAGE LANE	Barton upon Humber Parish		2	5	PUDSEY DIAMOND	PAINTED	SINGLE DOOR	BACK OF PATH	C/P	BLACK	MATT	PLANTED	CONTINUOUS	YES	LUCY	DNO
1	4000	504085.61	422426.93	FALKLAND WAY	Barton upon Humber Parish		2	5	OTHER	GRP	SINGLE DOOR	VERGE	NLC	GREY	MATT	PLANTED	CONTINUOUS	NO	NONE	DNO
FP1	4000	500124.88	408231.18	GRAMMAR SCHOOL ROAD	Brigg Parish		3	2	OTHER	PAINTED	MINI PILLAR	VERGE	NLC	GREY	MATT	PLANTED	CONTINUOUS	YES	CUT OUT	DNO
FP2	4001	500114.82	408400.2	GRAMMAR SCHOOL ROAD	Brigg Parish		3	2	LUCY	GALVANISED STEEL	MINI PILLAR	VERGE	NLC	UNPAINTED	NOT APPLICABLE	PLANTED	CONTINUOUS	NO	NONE	DNO
FP1	4000	487234.43	411885	HEBDEN ROAD	Scunthorpe		3	2	OTHER	CAST IRON	SINGLE DOOR	FRONT OF PATH	NLC	GREY	MATT	PLANTED	CONTINUOUS	UNKNOWN	UNKNOWN	UNKNOWN
FP1	4000	478316.8	403802.91	HIGH STREET	Epworth Parish		3	5	PUDSEY DIAMOND	PAINTED	SINGLE DOOR	BACK OF PATH	NLC	BLACK	MATT	PLANTED	CONTINUOUS	YES	TOFCO	DNO
1	4000	511075.58	414820.26	JAMES PLACE	Ulceby Parish		1	3	OTHER	GALVANISED STEEL	SINGLE DOOR	FRONT OF PATH	NLC	UNPAINTED	NOT APPLICABLE	PLANTED	CONTINUOUS	NO	NONE	DNO
1	4000	493733.55	398728.27	KING EDWARD STREET	Kirton in Lindsey Parish		3	1	OTHER	PAINTED	SINGLE DOOR	BACK OF PATH	NLC	GREY	MATT	PLANTED	CONTINUOUS	UNKNOWN	UNKNOWN	UNKNOWN
FP1	4000	487087.48	417683.16	NORFOLK AVENUE	Burton upon Stather Parish		3	2	OTHER	GRP	SINGLE DOOR	WALL	NLC	UNPAINTED	NOT APPLICABLE	PLANTED	CONTINUOUS	NO	NONE	DNO
FP1	4001	500062.31	407364.24	OLD COURTS ROAD	Brigg Parish		3	2	LUCY	GALVANISED STEEL	SINGLE DOOR	BACK OF PATH	C/P	UNPAINTED	NOT APPLICABLE	PLANTED	CONTINUOUS	NO	NONE	DNO
FP3	4002	489124.81	409416.16	ASHBY ROAD	Scunthorpe		4	2	LUCY	GALVANISED STEEL	MINI PILLAR	BACK OF PATH	NLC	UNPAINTED	NOT APPLICABLE	PLANTED	CONTINUOUS	YES	TOFCO	DNO
FP2	4003	489171.67	409845.01	ASHBY ROAD	Scunthorpe		4	2	LUCY	GALVANISED STEEL	MINI PILLAR	BACK OF PATH	NLC	UNPAINTED	NOT APPLICABLE	PLANTED	CONTINUOUS	YES	TOFCO	DNO
FP1	4004	489151.02	409889.76	ASHBY ROAD	Scunthorpe		4	2	LUCY	GALVANISED STEEL	MINI PILLAR	BACK OF PATH	NLC	UNPAINTED	NOT APPLICABLE	PLANTED	CONTINUOUS	YES	TOFCO	DNO
1	4000	489150.01	411577.98	PERCIVAL STREET	Scunthorpe		4	4	LUCY	GALVANISED STEEL	MINI PILLAR	BACK OF PATH	NLC	UNPAINTED	NOT APPLICABLE	PLANTED	CONTINUOUS	YES	TOFCO	DNO
1	4000	489163.49	411515.9	PORTER STREET	Scunthorpe		4	4	LUCY	GALVANISED STEEL	MINI PILLAR	BACK OF PATH	NLC	UNPAINTED	NOT APPLICABLE	PLANTED	CONTINUOUS	YES	TOFCO	DNO
FP1	4000	489370.74	409706.11	RIVELIN CRESCENT	Scunthorpe		4	2	OTHER	GALVANISED STEEL	MINI PILLAR	VERGE	NLC	UNPAINTED	NOT APPLICABLE	PLANTED	CONTINUOUS	NO	NONE	DNO
1	4000	489257.27	411654.17	TEALE STREET	Scunthorpe		4	4	LUCY	GALVANISED STEEL	MINI PILLAR	BACK OF PATH	NLC	UNPAINTED	NOT APPLICABLE	PLANTED	CONTINUOUS	YES	TOFCO	DNO
1	4000	491775.11	418611.3	TOP ROAD	Winterton Parish		1	1	LUCY	GALVANISED STEEL	SINGLE DOOR	VERGE	NLC	UNPAINTED	NOT APPLICABLE	PLANTED	CONTINUOUS	YES	TOFCO	DNO
1	4000	488942.07	421251.85	WEST HALTON LANE	Alkborough Parish		2	1	OTHER	GRP	MINI PILLAR	VERGE	NLC	UNPAINTED	NOT APPLICABLE	PLANTED	CONTINUOUS	NO	NONE	DNO
FP1	4000	476906.92	412658.91	WINDSOR CRESCENT	Crowle Parish		1	5	OTHER	GALVANISED STEEL	SINGLE DOOR	VERGE	NLC	UNPAINTED	NOT APPLICABLE	PLANTED	CONTINUOUS	NO	NONE	DNO
1	4000	493355.44	420512.14	WINTERTON ROAD	Winteringham Parish		3	1	OTHER	GALVANISED STEEL	SINGLE DOOR	VERGE	NLC	UNPAINTED	NOT APPLICABLE	PLANTED	CONTINUOUS	YES	TOFCO	DNO
FP5	4000	489201.55	408962.79	ASHBY ROAD	Scunthorpe		4	2	LUCY	GALVANISED STEEL	MINI PILLAR	BACK OF PATH	NLC	UNPAINTED	NOT APPLICABLE	PLANTED	CONTINUOUS	YES	TOFCO	DNO
FP4	4001	489142.74	409233.08	ASHBY ROAD	Scunthorpe		4	2	LUCY	GALVANISED STEEL	MINI PILLAR	BACK OF PATH	NLC	UNPAINTED	NOT APPLICABLE	PLANTED	CONTINUOUS	YES	TOFCO	DNO
1	4000	489166.76	411314.56	DONCASTER ROAD	Scunthorpe		3	6	OTHER	CAST IRON	TWO DOOR	BACK OF PATH	NLC	GREY	MATT	PLANTED	CONTINUOUS	UNKNOWN	UNKNOWN	UNKNOWN
2	4001	489027.41	411316.86	DONCASTER ROAD	Scunthorpe		3	6	OTHER	GALVANISED STEEL	MINI PILLAR	FRONT OF PATH	NLC	UNPAINTED	NOT APPLICABLE	PLANTED	CONTINUOUS	YES	TOFCO	DNO
1	4000	493488.73	398901.37	CHURCH STREET	Kirton in Lindsey Parish		3	1	OTHER	GALVANISED STEEL	SINGLE DOOR	VERGE	NLC	UNPAINTED	NOT APPLICABLE	PLANTED	CONTINUOUS	UNKNOWN	UNKNOWN	UNKNOWN
FP1	4000	486645.75	411073.15	DONCASTER ROAD	Gunness Parish		2	2	OTHER	GALVANISED STEEL	SINGLE DOOR	BACK OF PATH	NLC	UNPAINTED	NOT APPLICABLE	PLANTED	CONTINUOUS	YES	TOFCO	DNO
FP2	4001	484219.09	410711.77	DONCASTER ROAD	Gunness Parish		2	2	LUCY	PAINTED	SINGLE DOOR	VERGE	NLC	GREY	MATT	PLANTED	CONTINUOUS	YES	LUCY	DNO
4	4000	515578.55	416558.64	EASTFIELD ROAD	South Killingholme Parish		1	3	OTHER	PAINTED	SINGLE DOOR	VERGE	NLC	GREY	MATT	PLANTED	CONTINUOUS	YES	TOFCO	HIGHWAYS
5	4001	515576.75	416564.5	EASTFIELD ROAD	South Killingholme Parish		1	3	LUCY	GALVANISED STEEL	SINGLE DOOR	VERGE	NLC	UNPAINTED	NOT APPLICABLE	PLANTED	CONTINUOUS	YES	TOFCO	HIGHWAYS
1	4000	489730.83	409735.46	EAST COMMON LANE	Scunthorpe		2	3	OTHER	PAINTED	SINGLE DOOR	BACK OF PATH	NLC	GREY	MATT	PLANTED	CONTINUOUS	UNKNOWN	UNKNOWN	UNKNOWN
2	4001	489734.6	409734.92	EAST COMMON LANE	Scunthorpe		2	3	OTHER	GALVANISED STEEL	MINI PILLAR	BACK OF PATH	NLC	UNPAINTED	NOT APPLICABLE	PLANTED	CONTINUOUS	NO	NONE	DNO
6	4002	515475.66	416794.32	EASTFIELD ROAD	South Killingholme Parish		1	3	OTHER	GALVANISED STEEL	SINGLE DOOR	VERGE	NLC	UNPAINTED	NOT APPLICABLE	PLANTED	CONTINUOUS	NO	NONE	DNO
1	4003	515629.82	416394.39	EASTFIELD ROAD	South Killingholme Parish		1	3	OTHER	PAINTED	SINGLE DOOR	VERGE	NLC	GREY	MATT	PLANTED	CONTINUOUS	YES	TOFCO	HIGHWAYS
2	4004	515618.04	416464.67	EASTFIELD ROAD	South Killingholme Parish		1	3	OTHER	PAINTED	SINGLE DOOR	VERGE	NLC	GREY	MATT	PLANTED	CONTINUOUS	YES	TOFCO	HIGHWAYS
3	4005	515578.17	416517.56	EASTFIELD ROAD	South Killingholme Parish		1	3	OTHER	PAINTED	SINGLE DOOR	VERGE	NLC	GREY	MATT	PLANTED	CONTINUOUS	YES	TOFCO	HIGHWAYS
1	4000	502068.08	421714.63	FERRIBY ROAD	Barton upon Humber Parish		2	5	JLT	GALVANISED STEEL	TWO DOOR	VERGE	NLC	UNPAINTED	NOT APPLICABLE	PLANTED	CONTINUOUS	NO	NONE	DNO
FP1	4001	502154.16	421663.93	FERRIBY ROAD	Barton upon Humber Parish		2	5	OTHER	GRP	TWO DOOR	VERGE	NLC	GREEN	NOT APPLICABLE	PLANTED	CONTINUOUS	NO	NONE	DNO
X1	4003	502127.22	421594.73	FERRIBY ROAD	Barton upon Humber Parish		2	5	JLT	GALVANISED STEEL	TWO DOOR	VERGE	NLC	UNPAINTED	NOT APPLICABLE	PLANTED	CONTINUOUS	NO	NONE	DNO
FP1	4001	486359.3	413034.57	FERRY ROAD WEST	Flixborough Parish		1	2	OTHER	GRP	TWO DOOR	VERGE	NLC	GREEN	NOT APPLICABLE	PLANTED	CONTINUOUS	NO	NONE	HIGHWAYS
FP2	4000	488169.4	411992.44	FERRY ROAD	Scunthorpe	05/12/2024 00:00	4	4	OTHER	PAINTED	SINGLE DOOR	VERGE	NLC	GREEN	MATT	PLANTED	CONTINUOUS	NO	NONE	DNO

1	4000	510539.29	414614.64	HALLCROFT	Ulceby Parish		1	3	OTHER	GALVANISED STEEL	MINI PILLAR	FRONT OF PATH	NLC	UNPAINTED	NOT APPLICABLE	PLANTED	CONTINUOUS	NO	NONE	DNO
1FP	4000	489542.18	409027.13	LINCOLN GARDENS	Scunthorpe		4	2	LUCY	GALVANISED STEEL	MINI PILLAR	BACK OF PATH	NLC	UNPAINTED	NOT APPLICABLE	PLANTED	CONTINUOUS	NO	NONE	HIGHWAYS
FP1	4000	490249.44	410731.06	NEVILLE ROAD	Scunthorpe		4	2	LUCY	CAST IRON	SINGLE DOOR	BACK OF PATH	NLC	GREY	MATT	PLANTED	CONTINUOUS	UNKNOWN	UNKNOWN	UNKNOWN
1	4000	502836.5	421675.38	PROVIDENCE CRESCENT	Barton upon Humber Parish		2	5	BERGO	PAINTED	MINI PILLAR	VERGE	NLC	GREY	NOT APPLICABLE	PLANTED	CONTINUOUS	NO	NONE	DNO
FP1	4000	489168.52	410002.91	QUEENSWAY	Scunthorpe		4	2	LUCY	GALVANISED STEEL	SINGLE DOOR	SPLITTER ISLAND	NLC	UNPAINTED	NOT APPLICABLE	PLANTED	CONTINUOUS	NO	NONE	DNO
1	4000	489088.57	408244.8	ROCHDALE ROAD	Scunthorpe		3	1	PUDSEY DIAMOND	GALVANISED STEEL	SINGLE DOOR	BACK OF PATH	NLC	UNPAINTED	NOT APPLICABLE	PLANTED	CONTINUOUS	YES	TOFCO	DNO
1	4000	475551.49	399469.44	SANDBEDS LANE	Haxey Parish		2	6	OTHER	GALVANISED STEEL	SINGLE DOOR	OTHER	NLC	UNPAINTED	NOT APPLICABLE	PLANTED	CONTINUOUS	NO	NONE	DNO
FP1	4000	487232.2	411142.8	SCOTTER ROAD	Scunthorpe	13/02/2017 00:00	3	2	LUCY	GALVANISED STEEL	TWO DOOR	VERGE	NLC	UNPAINTED	NOT APPLICABLE	PLANTED	CONTINUOUS	YES	LUCY	DNO
FP1	4001	487256.98	409913.19	SCOTTER ROAD	Scunthorpe		3	2	PUDSEY DIAMOND	GALVANISED STEEL	TWO DOOR	VERGE	NLC	UNPAINTED	NOT APPLICABLE	PLANTED	CONTINUOUS	NO	NONE	HIGHWAYS
FP2	4002	487307.83	409461.03	SCOTTER ROAD	Scunthorpe		3	2	OTHER	GRP	TWO DOOR	VERGE	NLC	GREY	MATT	PLANTED	CONTINUOUS	NO	NONE	DNO
FP1X	4003	487208.71	411178.38	SCOTTER ROAD	Scunthorpe		3	2	LUCY	GALVANISED STEEL	MINI PILLAR	VERGE	NLC	UNPAINTED	NOT APPLICABLE	PLANTED	CONTINUOUS	YES	LUCY	DNO
2	4001	487427.54	408366.58	BURRINGHAM ROAD	Scunthorpe		4	3	OTHER	GALVANISED STEEL	SINGLE DOOR	BACK OF PATH	NLC	UNPAINTED	NOT APPLICABLE	PLANTED	CONTINUOUS	YES	CUT OUT	DNO
3	4002	487407.87	408381.07	BURRINGHAM ROAD	Scunthorpe		4	3	OTHER	GALVANISED STEEL	SINGLE DOOR	FRONT OF PATH	NLC	UNPAINTED	NOT APPLICABLE	PLANTED	CONTINUOUS	YES	CUT OUT	DNO
FP1	4000	487386.9	417604.41	ST BARBARAS CRESCENT	Burton upon Stather Parish		3	2	OTHER	GRP	SINGLE DOOR	WALL	NLC	UNPAINTED	NOT APPLICABLE	PLANTED	CONTINUOUS	NO	NONE	DNO
FP1	4000	488752.72	407760.1	WILLOUGHBY ROAD	Scunthorpe		4	3	OTHER	GALVANISED STEEL	MINI PILLAR	SPLITTER ISLAND	NLC	UNPAINTED	NOT APPLICABLE	PLANTED	CONTINUOUS	NO	NONE	DNO
FP1	4000	487423.93	417867.62	WILTSHIRE AVENUE	Burton upon Stather Parish		3	2	OTHER	GRP	SINGLE DOOR	WALL	NLC	UNPAINTED	NOT APPLICABLE	PLANTED	CONTINUOUS	NO	NONE	DNO
1	4000	488409.55	408585.74	BURRINGHAM ROAD	Scunthorpe		4	3	OTHER	GALVANISED STEEL	MINI PILLAR	BACK OF PATH	NLC	UNPAINTED	NOT APPLICABLE	PLANTED	CONTINUOUS	YES	TOFCO	DNO
1	4000	490669.53	408632.08	GRANGE LANE SOUTH	Scunthorpe		3	1	PUDSEY DIAMOND	GALVANISED STEEL	SINGLE DOOR	BACK OF PATH	NLC	UNPAINTED	NOT APPLICABLE	PLANTED	CONTINUOUS	YES	TOFCO	DNO
FP1	4000	489285.86	412832.76	MANNABERG WAY	Scunthorpe	19/12/2022 00:00	4	4	OTHER	GALVANISED STEEL	TWO DOOR	VERGE	NLC	UNPAINTED	NOT APPLICABLE	PLANTED	CONTINUOUS	NO	NONE	DNO
FP1	4000	488992.39	412847.16	PHOENIX PARKWAY	Scunthorpe		4	4	OTHER	GRP	TWO DOOR	BACK OF PATH	NLC	GREY	MATT	PLANTED	CONTINUOUS	UNKNOWN	UNKNOWN	UNKNOWN
FP1	4001	487522.89	412925.89	PHOENIX PARKWAY	Scunthorpe	05/12/2024 00:00	4	4	OTHER	PAINTED	TWO DOOR	BACK OF PATH	NLC	GREY	MATT	PLANTED	CONTINUOUS	NO	NONE	HIGHWAYS
2	4001	495712.47	406634.1	A15 LINK BETWEEN A18 AND M180	Broughton Parish		1	1	OTHER	GRP	TWO DOOR	VERGE	NLC	GREY	MATT	PLANTED	CONTINUOUS	UNKNOWN	UNKNOWN	UNKNOWN
3	4002	495673.4	406387.94	A15 LINK BETWEEN A18 AND M180	Broughton Parish		1	1	OTHER	GRP	TWO DOOR	VERGE	NLC	GREY	MATT	PLANTED	CONTINUOUS	NO	NONE	HIGHWAYS
1	4000	502809.17	422221.88	FLEETGATE	Barton upon Humber Parish		2	5	OTHER	PAINTED	MINI PILLAR	BACK OF PATH	NLC	GREY	MATT	PLANTED	CONTINUOUS	NO	NONE	DNO
1	4000	495709.83	406638.18	A15 LINK BETWEEN A18 AND M180	Broughton Parish	01/08/2023 00:00	1	1	OTHER	GALVANISED STEEL	TWO DOOR	VERGE	NLC	GREY	MATT	PLANTED	CONTINUOUS	YES	TOFCO	DNO
1	4000	498624.47	407082.68	A18 FROM A15 TO B1206	Broughton Parish		1	1	LUCY	GALVANISED STEEL	SINGLE DOOR	VERGE	NLC	UNPAINTED	NOT APPLICABLE	PLANTED	CONTINUOUS	NO	NONE	DNO
FP4	4002	493846.81	407449.94	MORTAL ASH HILL	Holme Parish		4	1	OTHER	PAINTED	MINI PILLAR	CENTRAL RESERVATION	NLC	GREY	NOT APPLICABLE	PLANTED	CONTINUOUS	UNKNOWN	UNKNOWN	UNKNOWN
FP1	4000	492895.78	408089.1	MORTAL ASH HILL	Holme Parish		4	1	PUDSEY DIAMOND	GALVANISED STEEL	SINGLE DOOR	VERGE	NLC	UNPAINTED	NOT APPLICABLE	PLANTED	CONTINUOUS	NO	NONE	HIGHWAYS
FP2	4001	492938.71	408101.51	MORTAL ASH HILL	Holme Parish		4	1	PUDSEY DIAMOND	GALVANISED STEEL	SINGLE DOOR	VERGE	NLC	UNPAINTED	NOT APPLICABLE	PLANTED	CONTINUOUS	UNKNOWN	UNKNOWN	UNKNOWN
1	4000	506675.06	421555.49	A1077 BETWEEN BARTON AND BARROW UPON HUM	Barrow upon Humber Parish		1	4	PUDSEY DIAMOND	GALVANISED STEEL	SINGLE DOOR	VERGE	NLC	UNPAINTED	NOT APPLICABLE	PLANTED	CONTINUOUS	YES	TOFCO	DNO
FP1	4000	478343.43	411394.65	WHARF ROAD	Crowle Parish		1	5	LUCY	GALVANISED STEEL	SINGLE DOOR	BACK OF PATH	NLC	UNPAINTED	NOT APPLICABLE	PLANTED	CONTINUOUS	YES	TOFCO	DNO
FP1	4000	488378.73	416755.97	MAIN STREET	Burton upon Stather Parish		3	2	OTHER	GRP	SINGLE DOOR	VERGE	NLC	UNPAINTED	NOT APPLICABLE	PLANTED	CONTINUOUS	YES	TOFCO	DNO
1FP	4000	500389.7	407196.66	WRAWBY ROAD	Brigg Parish		3	2	OTHER	GALVANISED STEEL	SINGLE DOOR	VERGE	NLC	UNPAINTED	NOT APPLICABLE	PLANTED	CONTINUOUS	UNKNOWN	UNKNOWN	UNKNOWN
FP1	4000	494910.54	414942.67	ERMINE STREET	Appleby Parish		2	1	LUCY	GALVANISED STEEL	SINGLE DOOR	VERGE	NLC	UNPAINTED	NOT APPLICABLE	PLANTED	CONTINUOUS	UNKNOWN	UNKNOWN	UNKNOWN
2	4000	505114.8	410930.92	MAIN STREET	Melton Ross Parish		1	3	OTHER	GRP	TWO DOOR	VERGE	NLC	GREY	MATT	PLANTED	CONTINUOUS	NO	NONE	HIGHWAYS
1	4001	505102.31	410936.92	MAIN STREET	Melton Ross Parish		1	3	LUCY	CAST IRON	TWO DOOR	VERGE	NLC	GREY	MATT	PLANTED	CONTINUOUS	UNKNOWN	UNKNOWN	UNKNOWN
FP1	4000	498733.59	406778.01	SCAWBY ROAD	Scawby Parish		2	2	OTHER	GALVANISED STEEL	SINGLE DOOR	BACK OF PATH	NLC	UNPAINTED	NOT APPLICABLE	PLANTED	CONTINUOUS	NO	NONE	DNO
1	4000	503991.68	422420.37	PASTURE ROAD SOUTH	Barton upon Humber Parish		2	5	OTHER	PAINTED	MINI PILLAR	VERGE	NLC	GREY	MATT	PLANTED	CONTINUOUS	NO	NONE	DNO
FP1	4000	509311.3	411036.9	A18 BETWEEN MELTON ROSS AND KIRMINGTON	Kirmington Parish	01/04/2015 00:00	2	3	PUDSEY DIAMOND	GALVANISED STEEL	SINGLE DOOR	VERGE	NLC	UNPAINTED	NOT APPLICABLE	PLANTED	CONTINUOUS	YES	UNKNOWN	DNO
FP1	4000	478202.23	411627.39	A161 FROM A18 TO EALAND	Crowle Parish		1	5	PUDSEY DIAMOND	GALVANISED STEEL	SINGLE DOOR	VERGE	NLC	UNPAINTED	NOT APPLICABLE	PLANTED	CONTINUOUS	NO	NONE	DNO
FP1	4000	489173.24	411545.87	ACCESS ROAD T101	Scunthorpe		4	4	LUCY	GALVANISED STEEL	MINI PILLAR	BACK OF PATH	NLC	UNPAINTED	NOT APPLICABLE	PLANTED	CONTINUOUS	YES	TOFCO	DNO
FP1	4000	484023.66	410650.83	A18 FROM ALTHORPE TO GUNNESS	Keadby with Althorpe Parish		3	4	OTHER	PAINTED	SINGLE DOOR	BACK OF PATH	NLC	GREY	MATT	PLANTED	CONTINUOUS	NO	NONE	DNO
FP1	4000	489161.88	411605.94	ACCESS ROAD T100	Scunthorpe		4	4	LUCY	GALVANISED STEEL	MINI PILLAR	BACK OF PATH	NLC	UNPAINTED	NOT APPLICABLE	PLANTED	CONTINUOUS	YES	TOFCO	DNO
FP1	4000	486502.99	411157.77	GALLAGHER RETAIL PARK	Gunness Parish		2	2	PUDSEY DIAMOND	GALVANISED STEEL	SINGLE DOOR	BACK OF PATH	NLC	UNPAINTED	NOT APPLICABLE	PLANTED	CONTINUOUS	YES	TOFCO	DNO
FP1	4000	489533	411353.88	ACCESS ROAD T156	Scunthorpe		4	4	LUCY	GALVANISED STEEL	MINI PILLAR	BACK OF PATH	NLC	UNPAINTED	NOT APPLICABLE	PLANTED	CONTINUOUS	NO	NONE	HIGHWAYS
1	4000	503061.26	423210.54	ACCESS ROADS IN WATERS EDGE COUNTRY PARK	Barton upon Humber Parish		2	5	LUCY	GALVANISED STEEL	SINGLE DOOR	BACK OF PATH	PRI	UNPAINTED	NOT APPLICABLE	PLANTED	CONTINUOUS	YES	TOFCO	DNO
FP2	4003	486489	411076	DONCASTER ROAD	Gunness Parish		2	2	NOT APPLICABLE	GALVANISED STEEL	SINGLE DOOR	VERGE	NLC	UNPAINTED	NOT APPLICABLE	PLANTED	NOT APPLICABLE	NOT APPLICABLE	NOT APPLICABLE	DNO
1	4000	505039.2	411171.23	A15 FROM ELSHAM WOLD JUNCTION TO M180	Scawby Parish		1	6	LUCY	PAINTED	TWO DOOR	VERGE	NLC	GREY	MATT	PLANTED	CONTINUOUS	UNKNOWN	UNKNOWN	UNKNOWN
FP2	4000	499979.23	407376.25	OLD COURTS ROAD CAR PARK	Brigg Parish		3	2	LUCY	GALVANISED STEEL	SINGLE DOOR	BACK OF PATH	C/P	UNPAINTED	NOT APPLICABLE	PLANTED	CONTINUOUS	NO	NONE	HIGHWAYS
1	4000	499973.12	407143.7	THE ANGEL CAR PARK	Brigg Parish		3	2	OTHER	CAST IRON	SINGLE DOOR	BACK OF PATH	NLC	GREY	MATT	PLANTED	CONTINUOUS	UNKNOWN	UNKNOWN	UNKNOWN
FP1	4001	508276	423048	BARROW ROAD	New Holland Parish	01/04/2019 00:00	1	4	OTHER	GALVANISED STEEL	SINGLE DOOR	VERGE	NLC	UNPAINTED	NOT APPLICABLE	PLANTED	CONTINUOUS	UNKNOWN	UNKNOWN	HIGHWAYS
1	4002	505025.47	411143.88	A15 FROM ELSHAM WOLD JUNCTION TO M180	Melton Ross Parish		1	3	OTHER	GALVANISED STEEL	SINGLE DOOR	BACK OF PATH	NLC	UNPAINTED	NOT APPLICABLE	PLANTED	CONTINUOUS	NO	NONE	HIGHWAYS
2	4003	505026.78	411138.63	A15 FROM ELSHAM WOLD JUNCTION TO M180	Melton Ross Parish		1	3	OTHER	GALVANISED STEEL	MINI PILLAR	VERGE	NLC	UNPAINTED	NOT APPLICABLE	PLANTED	CONTINUOUS	NO	NONE	HIGHWAYS
FP1	4001	488564	412096	FERRY ROAD	Scunthorpe		4	4	OTHER	GALVANISED STEEL	MINI PILLAR	VERGE	NLC	OTHER	NOT APPLICABLE	PLANTED	NOT APPLICABLE	UNKNOWN	UNKNOWN	DNO
FP1	4001	498920.62	421098.15	SLUICE ROAD	South Ferriby Parish		Not Applica	Applica	OTHER	GALVANISED STEEL	MINI PILLAR	VERGE	NLC	GREY	MATT	PLANTED	NOT APPLICABLE	NOT APPLICABLE	NOT APPLICABLE	DNO
FP1	4001	507746.39	421320.65	NEW HOLLAND ROAD	Barrow upon Humber Parish		1	4	OTHER	GRP	SINGLE DOOR	VERGE	NLC	NOT APPLICABLE	NOT APPLICABLE	PLANTED	NOT APPLICABLE	NOT APPLICABLE	NOT APPLICABLE	DNO
FP1	4001	489880	411629	OLD MARKET CAR PARK	Scunthorpe	01/04/2020 00:00	4	4	PUDSEY DIAMOND	GALVANISED STEEL	MINI PILLAR	OTHER	C/P	NOT APPLICABLE	NOT APPLICABLE	PLANTED	NOT APPLICABLE	YES	CHARLES	DNO
FP1	4001	507806	423722	LINCOLN CASTLE WAY	New Holland Parish		1	4	NOT APPLICABLE	GALVANISED STEEL	SINGLE DOOR	VERGE	NLC	UNPAINTED	NOT APPLICABLE	PLANTED	NOT APPLICABLE	NOT APPLICABLE	NOT APPLICABLE	NOT APPLICABLE
FP1	4001	489528	411364	RAVENDALE STREET NORTH	Scunthorpe		4	4	OTHER	GALVANISED STEEL	SINGLE DOOR	BACK OF PATH	NLC	UNPAINTED	NOT APPLICABLE	PLANTED	CONTINUOUS	UNKNOWN	UNKNOWN	UNKNOWN
FP1	4001	478344	403872	CHURCH STREET	Epworth Parish	10/08/2019 00:00	3	5	PUDSEY DIAMOND	GALVANISED STEEL	SINGLE DOOR	VERGE	C/P	BLACK	MATT	PLANTED	NOT APPLICABLE	YES	TOFCO	DNO

street_code	site_name	area_name	feat_cent_east	feat_cent_north	asset_id	asset_number	central_asset_id	commissioned_date	et_area	glr_area	road_traffic_speed	siting	column_bracket_projection	column_bracket_type	column_colour	column_lantern_access	column_lantern_manufacturer	column_lantern_type	column_manufacturer	column_material	column_mounting_height	column_protection	column_range
46100001	ABBEY ROAD	Scunthorpe	488983.64	408782.73	1	7000	00183541	01/04/1993 00:00	5	2	LESS THAN 30MPH	BACK OF FOOTPATH	800	SINGLE ARM	NOT APPLICABLE	RIGID COLUMN	URBIS	AXIA 2 S1	PETITJEAN	SHEET STEEL	6	GALVANISED	DAER
46100001	ABBEY ROAD	Scunthorpe	488697.93	408776.19	10	7009	00183550	01/04/1993 00:00	5	2	LESS THAN 30MPH	BACK OF FOOTPATH	800	SINGLE ARM	NOT APPLICABLE	RIGID COLUMN	URBIS	AXIA 2 S1	PETITJEAN	SHEET STEEL	6	GALVANISED	DAER
46100001	ABBEY ROAD	Scunthorpe	488663.13	408783.19	11	7010	00183551	01/04/1993 00:00	5	2	LESS THAN 30MPH	BACK OF FOOTPATH	800	SINGLE ARM	NOT APPLICABLE	RIGID COLUMN	URBIS	AXIA 2 S1	PETITJEAN	SHEET STEEL	6	GALVANISED	DAER
46100001	ABBEY ROAD	Scunthorpe	488634.04	408766.84	12	7011	00183552	01/04/1993 00:00	5	2	LESS THAN 30MPH	BACK OF FOOTPATH	800	SINGLE ARM	NOT APPLICABLE	RIGID COLUMN	URBIS	AXIA 2 S1	PETITJEAN	SHEET STEEL	6	GALVANISED	DAER
46100001	ABBEY ROAD	Scunthorpe	488642.05	408787.13	13	7012	00183553	01/04/2001 00:00	5	2	LESS THAN 30MPH	BACK OF FOOTPATH	0	POST TOP	NOT APPLICABLE	RIGID COLUMN	URBIS	AXIA 2 S1	MALLATITE	TUBULAR STEEL	5	GALVANISED	STEPPED TUBULAR
46100001	ABBEY ROAD	Scunthorpe	488636.88	408806.69	14	7013	00183554	01/04/2001 00:00	5	2	LESS THAN 30MPH	BACK OF FOOTPATH	0	POST TOP	NOT APPLICABLE	RIGID COLUMN	URBIS	AXIA 2 S1	MALLATITE	TUBULAR STEEL	5	GALVANISED	STEPPED TUBULAR
46100001	ABBEY ROAD	Scunthorpe	488952.56	408792.89	2	7001	00183542	01/04/1993 00:00	5	2	LESS THAN 30MPH	BACK OF FOOTPATH	800	SINGLE ARM	NOT APPLICABLE	RIGID COLUMN	URBIS	AXIA 2 S1	PETITJEAN	SHEET STEEL	6	GALVANISED	DAER
46100001	ABBEY ROAD	Scunthorpe	488927.8	408791.7	3	7002	00183543	01/04/1993 00:00	5	2	LESS THAN 30MPH	BACK OF FOOTPATH	800	SINGLE ARM	NOT APPLICABLE	RIGID COLUMN	URBIS	AXIA 2 S1	PETITJEAN	SHEET STEEL	6	GALVANISED	DAER
46100001	ABBEY ROAD	Scunthorpe	488897.42	408791.15	4	7003	00183544	01/04/1993 00:00	5	2	LESS THAN 30MPH	BACK OF FOOTPATH	800	SINGLE ARM	NOT APPLICABLE	RIGID COLUMN	URBIS	AXIA 2 S1	PETITJEAN	SHEET STEEL	6	GALVANISED	DAER
46100001	ABBEY ROAD	Scunthorpe	488870.68	408780	5	7004	00183545	01/04/1993 00:00	5	2	LESS THAN 30MPH	BACK OF FOOTPATH	800	SINGLE ARM	NOT APPLICABLE	RIGID COLUMN	URBIS	AXIA 2 S1	PETITJEAN	SHEET STEEL	6	GALVANISED	DAER
46100001	ABBEY ROAD	Scunthorpe	488837.36	408789.91	6	7005	00183546	01/04/1993 00:00	5	2	LESS THAN 30MPH	BACK OF FOOTPATH	800	SINGLE ARM	NOT APPLICABLE	RIGID COLUMN	URBIS	AXIA 2 S1	PETITJEAN	SHEET STEEL	6	GALVANISED	DAER
46100001	ABBEY ROAD	Scunthorpe	488802.31	408788.65	7	7006	00183547	01/04/1993 00:00	5	2	LESS THAN 30MPH	BACK OF FOOTPATH	800	SINGLE ARM	NOT APPLICABLE	RIGID COLUMN	URBIS	AXIA 2 S1	PETITJEAN	SHEET STEEL	6	GALVANISED	DAER
46100001	ABBEY ROAD	Scunthorpe	488765.18	408777.54	8	7007	00183548	01/04/1993 00:00	5	2	LESS THAN 30MPH	BACK OF FOOTPATH	800	SINGLE ARM	NOT APPLICABLE	RIGID COLUMN	URBIS	AXIA 2 S1	PETITJEAN	SHEET STEEL	6	GALVANISED	DAER
46100001	ABBEY ROAD	Scunthorpe	488731.73	408787.22	9	7008	00183549	01/04/1993 00:00	5	2	LESS THAN 30MPH	BACK OF FOOTPATH	800	SINGLE ARM	NOT APPLICABLE	RIGID COLUMN	URBIS	AXIA 2 S1	PETITJEAN	SHEET STEEL	6	GALVANISED	DAER
46100002	ABBEY ROAD	Ulceby Parish	510515.32	414787.13	1	7000	00183555	01/04/1973 00:00	3	1	LESS THAN 30MPH	BACK OF FOOTPATH	500	SINGLE ARM	MID GREY	RIGID COLUMN	URBIS	AXIA 2 S1	PETITJEAN	SHEET STEEL	6	PAINTED	DAER
46100002	ABBEY ROAD	Ulceby Parish	510583.24	415107.22	10	7009	00183564	01/04/1973 00:00	3	1	LESS THAN 30MPH	FRONT OF FOOTPATH	300	SINGLE ARM	MID GREY	RIGID COLUMN	URBIS	AXIA 2 S1	PETITJEAN	SHEET STEEL	5	PAINTED	DAER
46100002	ABBEY ROAD	Ulceby Parish	510581.91	415147.56	11	7010	00183565	01/04/1980 00:00	3	1	LESS THAN 30MPH	FRONT OF FOOTPATH	300	SINGLE ARM	MID GREY	RIGID COLUMN	URBIS	AXIA 2 S1	PETITJEAN	SHEET STEEL	5	PAINTED	DAER
46100002	ABBEY ROAD	Ulceby Parish	510578.75	415181.28	12	7011	00183566	01/04/1973 00:00	3	1	LESS THAN 30MPH	FRONT OF FOOTPATH	300	SINGLE ARM	MID GREY	RIGID COLUMN	URBIS	AXIA 2 S1	PETITJEAN	SHEET STEEL	5	PAINTED	DAER
46100002	ABBEY ROAD	Ulceby Parish	510520.66	414814.64	2	7001	00183556	01/04/2016 00:00	3	1	LESS THAN 30MPH	ON POLE	300	SINGLE ARM	NOT APPLICABLE	POLE MOUNTED	URBIS	AXIA 2 S1	WOODEN PO	WOOD	6	NOT APPLICABI	Not Applicable
46100002	ABBEY ROAD	Ulceby Parish	510530.04	414864.07	3	7002	00183557	01/04/1973 00:00	3	1	LESS THAN 30MPH	ON POLE	500	SINGLE ARM	NOT APPLICABLE	POLE MOUNTED	URBIS	AXIA 2 S1	WOODEN PO	WOOD	6	NOT APPLICABI	Not Applicable
46100002	ABBEY ROAD	Ulceby Parish	510533	414880.2	4	7003	00183558	01/04/1973 00:00	3	1	LESS THAN 30MPH	ON POLE	800	SINGLE ARM	NOT APPLICABLE	POLE MOUNTED	URBIS	AXIA 2 S1	WOODEN PO	WOOD	6	NOT APPLICABI	Not Applicable
46100002	ABBEY ROAD	Ulceby Parish	510541.4	414935.12	5	7004	00183559	01/04/1973 00:00	3	1	LESS THAN 30MPH	ON POLE	800	SINGLE ARM	NOT APPLICABLE	POLE MOUNTED	URBIS	AXIA 2 S1	WOODEN PO	WOOD	6	NOT APPLICABI	Not Applicable
46100002	ABBEY ROAD	Ulceby Parish	510546.51	414959.31	6	7005	00183560	01/04/1973 00:00	3	1	LESS THAN 30MPH	ON POLE	800	SINGLE ARM	NOT APPLICABLE	POLE MOUNTED	URBIS	AXIA 2 S1	WOODEN PO	WOOD	6	NOT APPLICABI	Not Applicable
46100002	ABBEY ROAD	Ulceby Parish	510555.22	414993.67	7	7006	00183561	01/04/2010 00:00	3	1	LESS THAN 30MPH	BACK OF FOOTPATH	0	POST TOP	NOT APPLICABLE	RIGID COLUMN	URBIS	AXIA 2 S1	MALLATITE	TUBULAR STEEL	6	GALVANISED	TUBULAR
46100002	ABBEY ROAD	Ulceby Parish	510587.45	415033.44	8	7007	00183562	01/04/2010 00:00	3	1	LESS THAN 30MPH	BACK OF FOOTPATH	0	POST TOP	NOT APPLICABLE	RIGID COLUMN	URBIS	AXIA 2 S1	MALLATITE	TUBULAR STEEL	6	GALVANISED	TUBULAR
46100002	ABBEY ROAD	Ulceby Parish	510585.12	415074.79	9	7008	00183563	01/04/2010 00:00	3	1	LESS THAN 30MPH	BACK OF FOOTPATH	0	POST TOP	NOT APPLICABLE	RIGID COLUMN	URBIS	AXIA 2 S1	MALLATITE	TUBULAR STEEL	6	GALVANISED	TUBULAR
46100003	ABBOTS ROAD	Scunthorpe	488974.62	408717.14	1	7000	00183567	01/04/1985 00:00	5	2	LESS THAN 30MPH	BACK OF FOOTPATH	300	SINGLE ARM	NOT APPLICABLE	RIGID COLUMN	URBIS	AXIA 2 S1	PETITJEAN	SHEET STEEL	6	GALVANISED	DAER
46100003	ABBOTS ROAD	Scunthorpe	488699.67	408719.6	10	7009	00183576	01/04/1980 00:00	5	2	LESS THAN 30MPH	BACK OF FOOTPATH	300	SINGLE ARM	MID GREY	RIGID COLUMN	URBIS	AXIA 2 S1	PETITJEAN	SHEET STEEL	5	PAINTED	DAER
46100003	ABBOTS ROAD	Scunthorpe	488676	408706.47	11	7010	00183577	01/04/1980 00:00	5	2	LESS THAN 30MPH	BACK OF FOOTPATH	300	SINGLE ARM	MID GREY	RIGID COLUMN	URBIS	AXIA 2 S1	PETITJEAN	SHEET STEEL	5	PAINTED	DAER
46100003	ABBOTS ROAD	Scunthorpe	488949.31	408727.26	2	7001	00183568	01/04/1985 00:00	5	2	LESS THAN 30MPH	BACK OF FOOTPATH	300	SINGLE ARM	NOT APPLICABLE	RIGID COLUMN	URBIS	AXIA 2 S1	PETITJEAN	SHEET STEEL	6	GALVANISED	DAER
46100003	ABBOTS ROAD	Scunthorpe	488924.04	408716.12	3	7002	00183569	01/04/1985 00:00	5	2	LESS THAN 30MPH	BACK OF FOOTPATH	300	SINGLE ARM	NOT APPLICABLE	RIGID COLUMN	URBIS	AXIA 2 S1	PETITJEAN	SHEET STEEL	6	GALVANISED	DAER
46100003	ABBOTS ROAD	Scunthorpe	488900.66	408726.29	4	7003	00183570	01/04/1985 00:00	5	2	LESS THAN 30MPH	BACK OF FOOTPATH	300	SINGLE ARM	NOT APPLICABLE	RIGID COLUMN	URBIS	AXIA 2 S1	PETITJEAN	SHEET STEEL	6	GALVANISED	DAER
46100003	ABBOTS ROAD	Scunthorpe	488868.6	408715.14	5	7004	00183571	01/04/1980 00:00	5	2	LESS THAN 30MPH	BACK OF FOOTPATH	300	SINGLE ARM	MID GREY	RIGID COLUMN	URBIS	AXIA 2 S1	PETITJEAN	SHEET STEEL	5	PAINTED	DAER
46100003	ABBOTS ROAD	Scunthorpe	488837.63	408725.05	6	7005	00183572	01/04/1980 00:00	5	2	LESS THAN 30MPH	BACK OF FOOTPATH	300	SINGLE ARM	MID GREY	RIGID COLUMN	URBIS	AXIA 2 S1	PETITJEAN	SHEET STEEL	5	PAINTED	DAER
46100003	ABBOTS ROAD	Scunthorpe	488814.67	408714.09	7	7006	00183573	01/04/1980 00:00	5	2	LESS THAN 30MPH	BACK OF FOOTPATH	300	SINGLE ARM	MID GREY	RIGID COLUMN	URBIS	AXIA 2 S1	PETITJEAN	SHEET STEEL	5	PAINTED	DAER
46100003	ABBOTS ROAD	Scunthorpe	488776.48	408723.72	8	7007	00183574	01/04/1980 00:00	5	2	LESS THAN 30MPH	BACK OF FOOTPATH	300	SINGLE ARM	MID GREY	RIGID COLUMN	URBIS	AXIA 2 S1	PETITJEAN	SHEET STEEL	5	PAINTED	DAER
46100003	ABBOTS ROAD	Scunthorpe	488738.26	408712.47	9	7008	00183575	01/04/1980 00:00	5	2	LESS THAN 30MPH	BACK OF FOOTPATH	300	SINGLE ARM	MID GREY	RIGID COLUMN	URBIS	AXIA 2 S1	PETITJEAN	SHEET STEEL	5	PAINTED	DAER
46100004	ABERCORN STREET	Scunthorpe	489460.62	410575.54	1	7000	00183578	01/04/1993 00:00	2	4	LESS THAN 30MPH	BACK OF FOOTPATH	800	SINGLE ARM	NOT APPLICABLE	RIGID COLUMN	URBIS	AXIA 2 S1	PETITJEAN	SHEET STEEL	6	GALVANISED	DAER
46100004	ABERCORN STREET	Scunthorpe	489469.38	410548.96	2	7001	00183579	01/04/1993 00:00	2	4	LESS THAN 30MPH	BACK OF FOOTPATH	800	SINGLE ARM	NOT APPLICABLE	RIGID COLUMN	URBIS	AXIA 2 S1	PETITJEAN	SHEET STEEL	6	GALVANISED	DAER
46100004	ABERCORN STREET	Scunthorpe	489466.84	410528.39	3	7002	00183580	01/04/1993 00:00	2	4	LESS THAN 30MPH	BACK OF FOOTPATH	800	SINGLE ARM	NOT APPLICABLE	RIGID COLUMN	URBIS	AXIA 2 S1	PETITJEAN	SHEET STEEL	6	GALVANISED	DAER
46100005	ORANGELEAF WAY	Barton upon Humber Parish	504136	422159	1	7001	04200276	01/04/2016 00:00	5	2	LESS THAN 30MPH	VERGE	0	POST TOP	NOT APPLICABLE	RIGID COLUMN	WRTL	STELA LONG 18 LED	MALLATITE	TUBULAR STEEL	6	GALVANISED	TUBULAR
46100005	ORANGELEAF WAY	Barton upon Humber Parish	504146.24	422192.43	2	7002	04200277	01/04/2016 00:00	5	2	LESS THAN 30MPH	VERGE	0	POST TOP	NOT APPLICABLE	RIGID COLUMN	WRTL	STELA LONG 18 LED	MALLATITE	TUBULAR STEEL	6	GALVANISED	TUBULAR
46100007	ADLINGFLEET ROAD	Garthorpe and Fockerby Parish	484820.27	419224.09	1	7000	00183581	01/04/1988 00:00	6	1	LESS THAN 30MPH	BACK OF FOOTPATH	0	POST TOP	NOT APPLICABLE	RIGID COLUMN	URBIS	AXIA 2 S1	FABRIKAT	TUBULAR STEEL	5	GALVANISED	5M01A
46100007	ADLINGFLEET ROAD	Garthorpe and Fockerby Parish	484803.6	419251.24	2	7001	00183582	01/04/1988 00:00	6	1	LESS THAN 30MPH	BACK OF FOOTPATH	0	POST TOP	NOT APPLICABLE	RIGID COLUMN	URBIS	AXIA 2 S1	FABRIKAT	TUBULAR STEEL	5	GALVANISED	5M01A
46100007	ADLINGFLEET ROAD	Garthorpe and Fockerby Parish	484787.74	419277.07	3	7002	00183583	01/04/1988 00:00	6	1	LESS THAN 30MPH	BACK OF FOOTPATH	0	POST TOP	NOT APPLICABLE	RIGID COLUMN	URBIS	AXIA 2 S1	FABRIKAT	TUBULAR STEEL	5	GALVANISED	5M01A
46100007	ADLINGFLEET ROAD	Garthorpe and Fockerby Parish	484766.06	419302.15	4	7003	00183584	01/04/1988 00:00	6	1	LESS THAN 30MPH	VERGE	0	POST TOP	NOT APPLICABLE	RIGID COLUMN	URBIS	AXIA 2 S1	FABRIKAT	TUBULAR STEEL	5	GALVANISED	5M01A
46100007	ADLINGFLEET ROAD	Garthorpe and Fockerby Parish	484761.22	419331.99	5	7004	00183585	01/04/1988 00:00	6	1	GREATER THAN 50MPH	VERGE	0	POST TOP	NOT APPLICABLE	RIGID COLUMN	URBIS	AXIA 2 S1	FABRIKAT	TUBULAR STEEL	5	GALVANISED	5M01A
46100008	AGARD AVENUE	Scunthorpe	488371.5	411143.61	1	7000	00183586	01/04/1993 00:00	6	3	LESS THAN 30MPH	BACK OF FOOTPATH	800	SINGLE ARM	NOT APPLICABLE	RIGID COLUMN	URBIS	AXIA 2 S1	PETITJEAN	SHEET STEEL	6	GALVANISED	DAER
46100008	AGARD AVENUE	Scunthorpe	488341.52	411140.76	2	7001	00183587	01/04/1993 00:00	6	3	LESS THAN 30MPH	BACK OF FOOTPATH	800	SINGLE ARM	NOT APPLICABLE	RIGID COLUMN	URBIS	AXIA 2 S1	PETITJEAN	SHEET STEEL	6	GALVANISED	DAER
46100008	AGARD AVENUE	Scunthorpe	488316.05	411139.95	3	7002	00183588	01/04/1993 00:00	6	3	LESS THAN 30MPH	BACK OF FOOTPATH	800	SINGLE ARM	NOT APPLICABLE	RIGID COLUMN	URBIS	AXIA 2 S1	PETITJEAN	SHEET STEEL	6	GALVANISED	DAER
46100009	AIREDALE CLOSE	Broughton Parish	496217.29	409206.22	1	7000	00183589	22/03/2019 00:00	1	1	LESS THAN 30MPH	BACK OF FOOTPATH	0	POST TOP	NOT APPLICABLE	RIGID COLUMN	URBIS	AXIA 2 S1	MALLATITE	TUBULAR STEEL	6	GALVANISED	TUBULAR
46100009	AIREDALE CLOSE	Broughton Parish	496224.6	409242.31	2	7001	00183590	22/03/2019 00:00	1	1	LESS THAN 30MPH	BACK OF FOOTPATH	0	POST TOP	NOT APPLICABLE	RIGID COLUMN	URBIS	AXIA 2 S1	MALLATITE	TUBULAR STEEL	6	GALVANISED	TUBULAR
46100010	AIREDALE ROAD	Scunthorpe	490809.8	408289.9	1	7000	00183591	01/04/2011 00:00	1	3	LESS THAN 30MPH	BACK OF FOOTPATH	0	POST TOP	NOT APPLICABLE	RIGID COLUMN	URBIS	AXIA 2 S1	MALLATITE	TUBULAR STEEL	6	GALVANISED	TUBULAR
46100010	AIREDALE ROAD	Scunthorpe	490777.1	408296	2	7001	00183592	01/04/2011 00:00	1	3	LESS THAN 30MPH	BACK OF FOOTPATH	0	POST TOP	NOT APPLICABLE	RIGID COLUMN	URBIS	AXIA 2 S1	MALLATITE	TUBULAR STEEL	6	GALVANISED	TUBULAR
46100012	MESSINGHAM LANE	Scawby Parish	494684.13	404980.86	1	7000	00191043	01/04/1999 00:00	2	2	BETWEEN 30-50 MPH	VERGE	300	SINGLE ARM	NOT APPLICABLE	RIGID COLUMN	URBIS	AXIA 2 S1	PETITJEAN	SHEET STEEL	8	GALVANISED	THAMES
46100012	MESSINGHAM LANE	Scawby Parish	494651.87	404976.56	2	7001	00191044	01/04/1991 00:00	2	2	BETWEEN 30-50 MPH	VERGE	300	SINGLE ARM	NOT APPLICABLE	RIGID COLUMN	URBIS	AXIA 2 S1	PETITJEAN	SHEET STEEL	8	GALVANISED	THAMES
46100012	MESSINGHAM LANE	Scawby Parish	494613.15	404971.87	3	7002	00191045	01/04/1999 00:00	2	2	BETWEEN 30-50 MPH	VERGE	300	SINGLE ARM	NOT APPLICABLE	RIGID COLUMN	URBIS	AXIA 2 S1	PETITJEAN	SHEET STEEL	8	GALVANISED	THAMES
46100012	MESSINGHAM LANE	Scawby Parish	494563.91	404976.2	4	7003	00191046	01/04/1999 00:00	2	2	BETWEEN 30-50 MPH	BACK OF FOOTPATH	300	SINGLE ARM	NOT APPLICABLE	RIGID COLUMN	URBIS	AXIA 2 S1	PETITJEAN	SHEET STEEL	8	GALVANISED	THAMES
46100012	MESSINGHAM LANE	Scawby Parish	494528.96	404970.82	5	7004	00191047	01/04/1999 00:00	2	2	BETWEEN 30-50 MPH	BACK OF FOOTPATH	300	SINGLE ARM	NOT APPLICABLE	RIGID COLUMN	URBIS	AXIA 2 S1	PETITJEAN	SHEET STEEL	8	GALVANISED	THAMES
46100012	MESSINGHAM LANE	Scawby Parish	494485.35	404966.28	6	7005	00191048	01/04/1999 00:00	2	2	BETWEEN 30-50 MPH	BACK OF FOOTPATH	300	SINGLE ARM	NOT APPLICABLE	RIGID COLUMN	URBIS	AXIA 2 S1	PETITJEAN	SHEET STEEL	8	GALVANISED	THAMES
46100012	MESSINGHAM LANE	Scawby Parish	494449.81	404961.26	7	7006	00191049	01/04/1999 00:00	2	2	BETWEEN 30-50 MPH	BACK OF FOOTPATH	300	SINGLE ARM	NOT APPLICABLE	RIGID COLUMN	URBIS	AXIA 2 S1	PETITJEAN	SHEET STEEL	8	GALVANISED	THAMES
46100012	MESSINGHAM LANE	Scawby Parish	494412.73	404944.26	8	7007	00191050	01/04/1999 00:00	2	2	BETWEEN 30-50 MPH	BACK OF FOOTPATH	300	SINGLE ARM	NOT APPLICABLE	RIGID COLUMN	URBIS	AXIA 2 S1	PETITJEAN	SHEET STEEL	8	GALVANISED	THAMES
46100013	ALAN CRESCENT	Scunthorpe	488813.76	410990.79	1	7000	00183593	05/02/2021 00:00	6	3	LESS THAN 30MPH	BACK OF FOOTPATH	0	POST TOP	NOT APPLICABLE	RIGID COLUMN	URBIS	AXIA 2 S1	MALLATITE	TUBULAR STEEL	6	GALVANISED	TUBULAR
46100013	ALAN CRESCENT	Scunthorpe	488808.71	410953.32	2	7001	00183594	05/02/2021 00:00	6	3	LESS THAN 30MPH	BACK OF FOOTPATH	0	POST TOP	NOT APPLICABLE	RIGID COLUMN	URBIS	AXIA 2 S1	MALLATITE	TUBULAR STEEL	6	GALVANISED	TUBULAR
46100014	ALBERT ROAD	Scunthorpe	489426.72	408494.71	1	7000	00183595	01/04/1985 00:00	1	3	LESS THAN 30MPH	VERGE	300	SINGLE ARM	NOT APPLICABLE	RIGID COLUMN	URBIS	AXIA 2 S1	PETITJEAN	SHEET STEEL	6	GALVANISED	DAER
46100014	ALBERT ROAD	Scunthorpe	489397.42	408494.23	2	7001	00183596	01/04/1985 00:00	1	3	LESS THAN 30MPH	VERGE	300	SINGLE ARM	NOT APPLICABLE	RIGID COLUMN	URBIS	AXIA 2 S1	PETITJEAN	SHEET STEEL	6	GALVANISED	DAER
46100014	ALBERT ROAD	Scunthorpe	489365.49	408493.61	3	7002	00183597	01/04/1985 00:00	1	3	LESS THAN 30MPH	BACK OF FOOTPATH	300	SINGLE ARM	NOT APPLICABLE	RIGID COLUMN	URBIS	AXIA 2 S1	PETITJEAN	SHEET STEEL	6	GALVANISED	DAER
46100014	ALBERT ROAD	Scunthorpe	489341.32	408493.08	4	7003	00183598	01/04/1985 00:00	1	3	LESS THAN 30MPH	VERGE	300	SINGLE ARM	NOT APPLICABLE	RIGID COLUMN	URBIS	AXIA 2 S1	PETITJEAN	SHEET STEEL	6	GALVANISED	DAER
46100014	ALBERT ROAD	Scunthorpe	489313.36	408501.99	5	7004	00183599	01/04/1999 00:00	1	3	LESS THAN 30MPH	BACK OF FOOTPATH	0	POST TOP	NOT APPLICABLE	RIGID COLUMN	URBIS	AXIA 2 S1	FABRIKAT	SHEET STEEL	6	GALVANISED	6M03B
46100016	ALBERTA CRESCENT	Bottesford Parish	488127.83	407437.95	1	7000	00183600	03/09/2019 00:00	3	1	LESS THAN 30MPH	FRONT OF FOOTPATH	0	POST TOP	NOT APPLICABLE	RIGID COLUMN	URBIS	AXIA 2 S1	MALLATITE	TUBULAR STEEL	6	GALVANISED	TUBULAR
46100016	ALBERTA CRESCENT	Bottesford Parish	488116.66	407469.07	2	7001	00183601	01/04/1980 00:00	3	1	LESS THAN 30MPH	BACK OF FOOTPATH	0	POST TOP	NOT APPLICABLE	RIGID COLUMN	URBIS	AXIA 2 S1	PETITJEAN	SHEET STEEL	5	GALVANISED	NIDD
46100017	ALBOURNE AVENUE	Scunthorpe	489011.8	410787.27	1	7000	00183602	01/04/2001 00:00	6	3	LESS THAN 30MPH	BACK OF FOOTPATH	500	SINGLE ARM	NOT APPLICABLE	RIGID COLUMN	URBIS	AXIA 2 S1	MALLATITE	TUBULAR STEEL	6	GALVANISED	STEPPED TUBULAR
46100017	ALBOURNE AVENUE	Scunthorpe	489003.08	410762.14	2	7001	00183603	01/04/2001 00:00	6	3	LESS THAN 30MPH	BACK OF FOOTPATH	500	SINGLE ARM	NOT APPLICABLE	RIGID COLUMN	URBIS	AXIA 2 S1	MALLATITE	TUBULAR STEEL	6	GALVANISED	STEPPED TUBULAR
46100017	ALBOURNE AVENUE	Scunthorpe	489012.52	410737.78	3	7002	00183604	01/04/2001 00:00	6	3	LESS THAN 30MPH	BACK OF FOOTPATH	500	SINGLE ARM	NOT APPLICABLE	RIGID COLUMN	URBIS	AXIA 2 S1	MALLATITE	TUBULAR STEEL	6	GALVANISED	STEPPED TUBULAR
46100017	ALBOURNE AVENUE	Scunthorpe	489008.23	410709.82	4	7003	00183605	01/04/2001 00:00	6	3	LESS THAN 30MPH	BACK OF FOOTPATH	0	POST TOP	NOT APPLICABLE	RIGID COLUMN	URBIS	AXIA 2 S1	MALLATITE	TUBULAR STEEL	5	GALVANISED	STEPPED TUBULAR
46100018	ALEXANDRA ROAD	Scunthorpe	489529.9	408627.6	1	7000	00183606	01/04/1999 00:00	1	3	LESS THAN 30MPH	BACK OF FOOTPATH	1000	SINGLE ARM	NOT APPLICABLE	RIGID COLUMN	URBIS	AXIA 2 S1	PETITJEAN	SHEET STEEL	8	GALVANISED	THAMES
46100018	ALEXANDRA ROAD	Scunthorpe	489534.77	408365.61	10	7009	00183615	01/04/2001 00:00	1	3	LESS THAN 30MPH	BACK OF FOOTPATH	300	SINGLE ARM	NOT APPLICABLE	RIGID COLUMN	URBIS	AXIA 2 S1	MALLATITE	TUBULAR STEEL	6	GALVANISED	STEPPED TUBULAR
46100018	ALEXANDRA ROAD	Scunthorpe	489524.58	408337.03	11	7010	00183616	01/04/2001 00:00	1	3	LESS THAN 30MPH	BACK OF FOOTPATH	300	SINGLE ARM	NOT APPLICABLE	RIGID COLUMN	URBIS	AXIA 2 S1	MALLATITE	TUBULAR STEEL	6	GALVANISED	STEPPED TUBULAR
46100018	ALEXANDRA ROAD	Scunthorpe	489493.98	408377.16	12	7011	00183617	01/04/1999 00:00	1	3	NOT ON A ROAD	BACK OF FOOTPATH	0	POST TOP	NOT APPLICABLE	MID HINGED	URBIS	AXIA 2 S1	PETITJEAN	SHEET STEEL	5	GALVANISED	LEVEN
46100018	ALEXANDRA ROAD	Scunthorpe	489519.59	408598.29	2	7001	00183607	01/04/2001 00:00	1	3	LESS THAN 30MPH	BACK OF FOOTPATH	300	SINGLE ARM	NOT APPLICABLE	RIGID COLUMN	URBIS	AXIA 2 S1	MALLATITE	TUBULAR STEEL	6	GALVANISED	STEPPED TUBULAR
46100018	ALEXANDRA ROAD	Scunthorpe	489531.61	408573.86	3	7002	00183608	01/04/2001 00:00	1	3	LESS THAN 30MPH	BACK OF FOOTPATH	300	SINGLE ARM	NOT APPLICABLE	RIGID COLUMN	URBIS	AXIA 2 S1	MALLATITE	TUBULAR STEEL	6	GALVANISED	STEPPED TUBULAR
46100018	ALEXANDRA ROAD	Scunthorpe	489520.54	408550.37	4	7003	00183609	01/04/2001 00:00	1	3	LESS THAN 30MPH	BACK OF FOOTPATH	300	SINGLE ARM	NOT APPLICABLE	RIGID COLUMN	URBIS	AXIA 2 S1	MALLATITE	TUBULAR STEEL	6	GALVANISED	STEPPED TUBULAR
46100018	ALEXANDRA ROAD	Scunthorpe	489532.51	408522.3	5	7004	00183610	01/04/2001 00:00	1	3	LESS THAN 30MPH	BACK OF FOOTPATH	300	SINGLE ARM	NOT APPLICABLE	RIGID COLUMN	URBIS	AXIA 2 S1	MALLATITE	TUBULAR STEEL	6	GALVANISED	STEPPED TUBULAR
46100018	ALEXANDRA ROAD	Scunthorpe	489521.99	408491.49	6	7005	00183611	01/04/2001 00:00	1	3	LESS THAN 30MPH	BACK OF FOOTPATH	300	SINGLE ARM	NOT APPLICABLE	RIGID COLUMN	URBIS	AXIA 2 S1	MALLATITE	TUBULAR STEEL	6	GALVANISED	STEPPED TUBULAR
46100018	ALEXANDRA ROAD	Scunthorpe	489532.89	408465.19	7	7006	00183612	01/04/2001 00:00	1	3	LESS THAN 30MPH	BACK OF FOOTPATH	300	SINGLE ARM	NOT APPLICABLE	RIGID COLUMN	URBIS	AXIA 2 S1	MALLATITE	TUBULAR STEEL	6	GALVANISED	STEPPED TUBULAR
46100018	ALEXANDRA ROAD	Scunthorpe	489523.87	408428.74	8	7007	00183613	01/04/2001 00:00	1	3	LESS THAN 30MP

46100046	ASHDOWN CLOSE	Brigg Parish	501402.75	407076.01	1	7000	00183774	01/04/1989 00:00	2	3	LESS THAN 30MPH	VERGE	0	POST TOP	LIGHT GREY	RIGID COLUMN	URBIS	AXIA 2 S1	PETITJEAN	SHEET STEEL	5	PAINTED	NIDD
46100046	ASHDOWN CLOSE	Brigg Parish	501428.21	407078.67	2	7001	00183775	01/04/1989 00:00	2	3	LESS THAN 30MPH	VERGE	0	POST TOP	LIGHT GREY	RIGID COLUMN	URBIS	AXIA 2 S1	PETITJEAN	SHEET STEEL	5	PAINTED	NIDD
46100047	ASPEN GROVE	Scunthorpe	489718.81	409600.67	1	7000	00183776	01/10/2012 00:00	2	4	LESS THAN 30MPH	FRONT OF FOOTPATH	0	POST TOP	NOT APPLICABLE	RIGID COLUMN	URBIS	AXIA 2 S1	MALLATITE	TUBULAR STEEL	6	GALVANISED	TUBULAR
46100047	ASPEN GROVE	Scunthorpe	489735.82	409617.02	2	7001	00183777	07/12/2017 00:00	2	4	LESS THAN 30MPH	FRONT OF FOOTPATH	0	POST TOP	NOT APPLICABLE	RIGID COLUMN	URBIS	AXIA 2 S1	VALMONT ST	TUBULAR STEEL	6	GALVANISED	TUBULAR
46100047	ASPEN GROVE	Scunthorpe	489768.28	409643.77	3	7002	00183778	01/04/2008 00:00	2	4	LESS THAN 30MPH	VERGE	0	POST TOP	NOT APPLICABLE	RIGID COLUMN	URBIS	AXIA 2 S1	MALLATITE	TUBULAR STEEL	6	GALVANISED	TUBULAR
46100048	ASTERBY ROAD	Scunthorpe	488489.88	408398.44	1	7000	00183779	11/12/2020 00:00	3	4	LESS THAN 30MPH	BACK OF FOOTPATH	0	POST TOP	NOT APPLICABLE	RIGID COLUMN	URBIS	AXIA 2 S1	MALLATITE	TUBULAR STEEL	6	GALVANISED	TUBULAR
46100048	ASTERBY ROAD	Scunthorpe	488728.35	408377.27	10	7010	00183789	01/04/2010 00:00	3	4	LESS THAN 30MPH	FRONT OF FOOTPATH	0	POST TOP	NOT APPLICABLE	RIGID COLUMN	URBIS	AXIA 2 S1	MALLATITE	TUBULAR STEEL	6	GALVANISED	TUBULAR
46100048	ASTERBY ROAD	Scunthorpe	488733.43	408345.38	11	7011	00183790	11/12/2020 00:00	3	4	LESS THAN 30MPH	BACK OF FOOTPATH	0	POST TOP	NOT APPLICABLE	RIGID COLUMN	URBIS	AXIA 2 S1	MALLATITE	TUBULAR STEEL	6	GALVANISED	TUBULAR
46100048	ASTERBY ROAD	Scunthorpe	488747.76	408324.87	12	7012	00183791	11/12/2020 00:00	3	4	LESS THAN 30MPH	BACK OF FOOTPATH	0	POST TOP	NOT APPLICABLE	RIGID COLUMN	URBIS	AXIA 2 S1	MALLATITE	TUBULAR STEEL	6	GALVANISED	TUBULAR
46100048	ASTERBY ROAD	Scunthorpe	488515.81	408396.41	2	7001	00183780	29/11/2024 00:00	3	4	LESS THAN 30MPH	FRONT OF FOOTPATH	0	POST TOP	NOT APPLICABLE	RIGID COLUMN	URBIS	AXIA 2 S1	MALLATITE	TUBULAR STEEL	6	GALVANISED	TUBULAR
46100048	ASTERBY ROAD	Scunthorpe	488539.2	408407.62	3	7002	00183781	11/12/2020 00:00	3	4	LESS THAN 30MPH	BACK OF FOOTPATH	0	POST TOP	NOT APPLICABLE	RIGID COLUMN	URBIS	AXIA 2 S1	MALLATITE	TUBULAR STEEL	6	GALVANISED	TUBULAR
46100048	ASTERBY ROAD	Scunthorpe	488559.62	408404.52	4	7003	00183782	01/04/2012 00:00	3	4	LESS THAN 30MPH	FRONT OF FOOTPATH	0	POST TOP	NOT APPLICABLE	RIGID COLUMN	URBIS	AXIA 2 S1	MALLATITE	TUBULAR STEEL	6	GALVANISED	TUBULAR
46100048	ASTERBY ROAD	Scunthorpe	488592.89	408417.77	5	7004	00183783	11/12/2020 00:00	3	4	LESS THAN 30MPH	BACK OF FOOTPATH	0	POST TOP	NOT APPLICABLE	RIGID COLUMN	URBIS	AXIA 2 S1	MALLATITE	TUBULAR STEEL	6	GALVANISED	TUBULAR
46100048	ASTERBY ROAD	Scunthorpe	488630.15	408416.72	6	7005	00183784	01/04/1980 00:00	3	4	LESS THAN 30MPH	BACK OF FOOTPATH	300	SINGLE ARM	NOT APPLICABLE	RIGID COLUMN	URBIS	AXIA 2 S1	PETITJEAN	SHEET STEEL	5	GALVANISED	DAER
46100048	ASTERBY ROAD	Scunthorpe	488662.19	408430.89	7	7006	00183785	11/12/2020 00:00	3	4	LESS THAN 30MPH	BACK OF FOOTPATH	0	POST TOP	NOT APPLICABLE	RIGID COLUMN	URBIS	AXIA 2 S1	MALLATITE	TUBULAR STEEL	6	GALVANISED	TUBULAR
46100048	ASTERBY ROAD	Scunthorpe	488702.37	408422.26	8	7008	00183787	11/12/2020 00:00	3	4	LESS THAN 30MPH	BACK OF FOOTPATH	0	POST TOP	NOT APPLICABLE	RIGID COLUMN	URBIS	AXIA 2 S1	MALLATITE	TUBULAR STEEL	6	GALVANISED	TUBULAR
46100048	ASTERBY ROAD	Scunthorpe	488699.9	408439.27	8A	7007	00183786	01/04/1980 00:00	3	4	NOT ON A ROAD	BACK OF FOOTPATH	0	POST TOP	NOT APPLICABLE	RIGID COLUMN	URBIS	AXIA 2 S1	PETITJEAN	SHEET STEEL	5	GALVANISED	NIDD
46100048	ASTERBY ROAD	Scunthorpe	488715.76	408406.46	9	7009	00183788	11/12/2020 00:00	3	4	LESS THAN 30MPH	BACK OF FOOTPATH	0	POST TOP	NOT APPLICABLE	RIGID COLUMN	URBIS	AXIA 2 S1	MALLATITE	TUBULAR STEEL	6	GALVANISED	TUBULAR
46100049	ATKINSON AVENUE	Brigg Parish	500453	408059	1	7000	00183792	01/04/1993 00:00	2	3	LESS THAN 30MPH	BACK OF FOOTPATH	800	SINGLE ARM	NOT APPLICABLE	RIGID COLUMN	URBIS	AXIA 2 S1	PETITJEAN	SHEET STEEL	6	GALVANISED	DAER
46100049	ATKINSON AVENUE	Brigg Parish	500411.02	408241.69	10	7009	00183801	01/04/1993 00:00	2	3	LESS THAN 30MPH	BACK OF FOOTPATH	800	SINGLE ARM	NOT APPLICABLE	RIGID COLUMN	URBIS	AXIA 2 S1	PETITJEAN	SHEET STEEL	6	GALVANISED	DAER
46100049	ATKINSON AVENUE	Brigg Parish	500411.1	408263.4	11	7010	00183802	01/04/1993 00:00	2	3	LESS THAN 30MPH	VERGE	800	SINGLE ARM	NOT APPLICABLE	RIGID COLUMN	URBIS	AXIA 2 S1	PETITJEAN	SHEET STEEL	6	GALVANISED	DAER
46100049	ATKINSON AVENUE	Brigg Parish	500456.27	408082.89	2	7001	00183793	01/04/1993 00:00	2	3	LESS THAN 30MPH	BACK OF FOOTPATH	800	SINGLE ARM	NOT APPLICABLE	RIGID COLUMN	URBIS	AXIA 2 S1	PETITJEAN	SHEET STEEL	6	GALVANISED	DAER
46100049	ATKINSON AVENUE	Brigg Parish	500441.37	408102.02	3	7002	00183794	01/04/1993 00:00	2	3	LESS THAN 30MPH	BACK OF FOOTPATH	800	SINGLE ARM	NOT APPLICABLE	RIGID COLUMN	URBIS	AXIA 2 S1	PETITJEAN	SHEET STEEL	6	GALVANISED	DAER
46100049	ATKINSON AVENUE	Brigg Parish	500436.05	408125.53	4	7003	00183795	01/04/1993 00:00	2	3	LESS THAN 30MPH	BACK OF FOOTPATH	800	SINGLE ARM	NOT APPLICABLE	RIGID COLUMN	URBIS	AXIA 2 S1	PETITJEAN	SHEET STEEL	6	GALVANISED	DAER
46100049	ATKINSON AVENUE	Brigg Parish	500414.7	408120.83	5	7004	00183796	01/04/1993 00:00	2	3	LESS THAN 30MPH	BACK OF FOOTPATH	800	SINGLE ARM	NOT APPLICABLE	RIGID COLUMN	URBIS	AXIA 2 S1	PETITJEAN	SHEET STEEL	6	GALVANISED	DAER
46100049	ATKINSON AVENUE	Brigg Parish	500426.64	408142.82	6	7005	00183797	01/04/1993 00:00	2	3	LESS THAN 30MPH	BACK OF FOOTPATH	800	SINGLE ARM	NOT APPLICABLE	RIGID COLUMN	URBIS	AXIA 2 S1	PETITJEAN	SHEET STEEL	6	GALVANISED	DAER
46100049	ATKINSON AVENUE	Brigg Parish	500421.7	408166.07	7	7006	00183798	01/04/1993 00:00	2	3	LESS THAN 30MPH	BACK OF FOOTPATH	800	SINGLE ARM	NOT APPLICABLE	RIGID COLUMN	URBIS	AXIA 2 S1	PETITJEAN	SHEET STEEL	6	GALVANISED	DAER
46100049	ATKINSON AVENUE	Brigg Parish	500413.57	408191.79	8	7007	00183799	01/04/1993 00:00	2	3	LESS THAN 30MPH	BACK OF FOOTPATH	800	SINGLE ARM	NOT APPLICABLE	RIGID COLUMN	URBIS	AXIA 2 S1	PETITJEAN	SHEET STEEL	6	GALVANISED	DAER
46100049	ATKINSON AVENUE	Brigg Parish	500417.77	408219.58	9	7008	00183800	01/04/1993 00:00	2	3	LESS THAN 30MPH	BACK OF FOOTPATH	800	SINGLE ARM	NOT APPLICABLE	RIGID COLUMN	URBIS	AXIA 2 S1	PETITJEAN	SHEET STEEL	6	GALVANISED	DAER
46100050	ATKINSONS WAY	Scunthorpe	488823.16	413074.31	1	7000	00183803	01/04/1992 00:00	4	4	LESS THAN 30MPH	BACK OF FOOTPATH	1000	SINGLE ARM	NOT APPLICABLE	RIGID COLUMN	URBIS	AXIA 2 S1	PETITJEAN	SHEET STEEL	8	GALVANISED	THAMES
46100050	ATKINSONS WAY	Scunthorpe	488534.39	413105.11	10	7009	00183812	01/04/1992 00:00	4	4	LESS THAN 30MPH	BACK OF FOOTPATH	1000	SINGLE ARM	MID GREY	RIGID COLUMN	URBIS	AXIA 2 S1	PETITJEAN	SHEET STEEL	8	PAINTED	THAMES
46100050	ATKINSONS WAY	Scunthorpe	488495.5	413108.65	11	7010	00183813	01/04/1992 00:00	4	4	LESS THAN 30MPH	BACK OF FOOTPATH	1000	SINGLE ARM	MID GREY	RIGID COLUMN	URBIS	AXIA 2 S1	PETITJEAN	SHEET STEEL	8	PAINTED	THAMES
46100050	ATKINSONS WAY	Scunthorpe	488461.94	413125.43	12	7011	00183814	01/04/1992 00:00	4	4	LESS THAN 30MPH	BACK OF FOOTPATH	1000	SINGLE ARM	MID GREY	RIGID COLUMN	URBIS	AXIA 2 S1	PETITJEAN	SHEET STEEL	8	PAINTED	THAMES
46100050	ATKINSONS WAY	Scunthorpe	488436.1	413115.51	13	7012	00183815	01/04/1992 00:00	4	4	LESS THAN 30MPH	BACK OF FOOTPATH	1000	SINGLE ARM	MID GREY	RIGID COLUMN	URBIS	AXIA 2 S1	PETITJEAN	SHEET STEEL	8	PAINTED	THAMES
46100050	ATKINSONS WAY	Scunthorpe	488418.89	413131.43	14	7013	00183816	01/04/1992 00:00	4	4	LESS THAN 30MPH	BACK OF FOOTPATH	1000	SINGLE ARM	MID GREY	RIGID COLUMN	URBIS	AXIA 2 S1	PETITJEAN	SHEET STEEL	8	PAINTED	THAMES
46100050	ATKINSONS WAY	Scunthorpe	488379.62	413123.99	15	7014	00183817	01/04/1992 00:00	4	4	LESS THAN 30MPH	BACK OF FOOTPATH	1000	SINGLE ARM	MID GREY	RIGID COLUMN	URBIS	AXIA 2 S1	PETITJEAN	SHEET STEEL	8	PAINTED	THAMES
46100050	ATKINSONS WAY	Scunthorpe	488798.96	413090.44	2	7001	00183804	01/04/1992 00:00	4	4	LESS THAN 30MPH	BACK OF FOOTPATH	1000	SINGLE ARM	MID GREY	RIGID COLUMN	URBIS	AXIA 2 S1	PETITJEAN	SHEET STEEL	8	PAINTED	THAMES
46100050	ATKINSONS WAY	Scunthorpe	488761.62	413098.22	3	7002	00183805	01/04/1992 00:00	4	4	LESS THAN 30MPH	BACK OF FOOTPATH	1000	SINGLE ARM	MID GREY	RIGID COLUMN	URBIS	AXIA 2 S1	PETITJEAN	SHEET STEEL	8	PAINTED	THAMES
46100050	ATKINSONS WAY	Scunthorpe	488722.4	413093.22	4	7003	00183806	01/04/1992 00:00	4	4	LESS THAN 30MPH	BACK OF FOOTPATH	1000	SINGLE ARM	MID GREY	RIGID COLUMN	URBIS	AXIA 2 S1	PETITJEAN	SHEET STEEL	8	PAINTED	THAMES
46100050	ATKINSONS WAY	Scunthorpe	488692.86	413107.83	5	7004	00183807	01/04/1992 00:00	4	4	LESS THAN 30MPH	BACK OF FOOTPATH	1000	SINGLE ARM	MID GREY	RIGID COLUMN	URBIS	AXIA 2 S1	PETITJEAN	SHEET STEEL	8	PAINTED	THAMES
46100050	ATKINSONS WAY	Scunthorpe	488674.31	413095.74	6	7005	00183808	01/04/1992 00:00	4	4	LESS THAN 30MPH	BACK OF FOOTPATH	1000	SINGLE ARM	MID GREY	RIGID COLUMN	URBIS	AXIA 2 S1	PETITJEAN	SHEET STEEL	8	PAINTED	THAMES
46100050	ATKINSONS WAY	Scunthorpe	488634.29	413111.39	7	7006	00183809	01/04/1992 00:00	4	4	LESS THAN 30MPH	BACK OF FOOTPATH	1000	SINGLE ARM	MID GREY	RIGID COLUMN	URBIS	AXIA 2 S1	PETITJEAN	SHEET STEEL	8	PAINTED	THAMES
46100050	ATKINSONS WAY	Scunthorpe	488602.26	413101.11	8	7007	00183810	01/04/1992 00:00	4	4	LESS THAN 30MPH	BACK OF FOOTPATH	1000	SINGLE ARM	MID GREY	RIGID COLUMN	URBIS	AXIA 2 S1	PETITJEAN	SHEET STEEL	8	PAINTED	THAMES
46100050	ATKINSONS WAY	Scunthorpe	488567.4	413114.46	9	7008	00183811	01/04/1992 00:00	4	4	LESS THAN 30MPH	BACK OF FOOTPATH	1000	SINGLE ARM	MID GREY	RIGID COLUMN	URBIS	AXIA 2 S1	PETITJEAN	SHEET STEEL	8	PAINTED	THAMES
46100051	ATLAS ROAD	Scunthorpe	488965.7	409637.84	1	7000	00183818	08/08/2019 00:00	5	4	LESS THAN 30MPH	BACK OF FOOTPATH	0	POST TOP	NOT APPLICABLE	RIGID COLUMN	URBIS	AXIA 2 S1	MALLATITE	TUBULAR STEEL	6	GALVANISED	TUBULAR
46100051	ATLAS ROAD	Scunthorpe	489014.15	409854.28	10	7009	00183827	08/08/2019 00:00	5	4	LESS THAN 30MPH	VERGE	0	POST TOP	NOT APPLICABLE	RIGID COLUMN	URBIS	AXIA 2 S1	MALLATITE	TUBULAR STEEL	6	GALVANISED	TUBULAR
46100051	ATLAS ROAD	Scunthorpe	488985.2	409645.97	2	7001	00183819	08/08/2019 00:00	5	4	LESS THAN 30MPH	BACK OF FOOTPATH	0	POST TOP	NOT APPLICABLE	RIGID COLUMN	URBIS	AXIA 2 S1	MALLATITE	TUBULAR STEEL	6	GALVANISED	TUBULAR
46100051	ATLAS ROAD	Scunthorpe	488992.24	409666.66	3	7002	00183820	01/04/2008 00:00	5	4	LESS THAN 30MPH	BACK OF FOOTPATH	0	POST TOP	NOT APPLICABLE	RIGID COLUMN	URBIS	AXIA 2 S1	MALLATITE	TUBULAR STEEL	6	GALVANISED	TUBULAR
46100051	ATLAS ROAD	Scunthorpe	489000.08	409692.5	4	7003	00183821	08/08/2019 00:00	5	4	LESS THAN 30MPH	BACK OF FOOTPATH	0	POST TOP	NOT APPLICABLE	RIGID COLUMN	URBIS	AXIA 2 S1	MALLATITE	TUBULAR STEEL	6	GALVANISED	TUBULAR
46100051	ATLAS ROAD	Scunthorpe	488994.68	409725.27	5	7004	00183822	08/08/2019 00:00	5	4	LESS THAN 30MPH	FRONT OF FOOTPATH	0	POST TOP	NOT APPLICABLE	RIGID COLUMN	URBIS	AXIA 2 S1	MALLATITE	TUBULAR STEEL	6	GALVANISED	TUBULAR
46100051	ATLAS ROAD	Scunthorpe	489004.52	409752.89	6	7005	00183823	01/04/2008 00:00	5	4	LESS THAN 30MPH	BACK OF FOOTPATH	0	POST TOP	NOT APPLICABLE	RIGID COLUMN	URBIS	AXIA 2 S1	MALLATITE	TUBULAR STEEL	6	GALVANISED	TUBULAR
46100051	ATLAS ROAD	Scunthorpe	488997.96	409765.62	7	7006	00183824	08/08/2019 00:00	5	4	LESS THAN 30MPH	VERGE	0	POST TOP	NOT APPLICABLE	RIGID COLUMN	URBIS	AXIA 2 S1	MALLATITE	TUBULAR STEEL	6	GALVANISED	TUBULAR
46100051	ATLAS ROAD	Scunthorpe	489008.35	409791.72	8	7007	00183825	08/08/2019 00:00	5	4	LESS THAN 30MPH	VERGE	0	POST TOP	NOT APPLICABLE	RIGID COLUMN	URBIS	AXIA 2 S1	MALLATITE	TUBULAR STEEL	6	GALVANISED	TUBULAR
46100051	ATLAS ROAD	Scunthorpe	489003.21	409821.35	9	7008	00183826	08/08/2019 00:00	5	4	LESS THAN 30MPH	VERGE	0	POST TOP	NOT APPLICABLE	RIGID COLUMN	URBIS	AXIA 2 S1	MALLATITE	TUBULAR STEEL	6	GALVANISED	TUBULAR
46100052	AUCKLAND ROAD	Scunthorpe	488584.57	410984.85	1	7000	00183828	01/04/1993 00:00	6	3	LESS THAN 30MPH	BACK OF FOOTPATH	800	SINGLE ARM	NOT APPLICABLE	RIGID COLUMN	URBIS	AXIA 2 S1	PETITJEAN	SHEET STEEL	6	GALVANISED	DAER
46100052	AUCKLAND ROAD	Scunthorpe	488573.97	410957.1	2	7001	00183829	01/04/1993 00:00	6	3	LESS THAN 30MPH	BACK OF FOOTPATH	800	SINGLE ARM	NOT APPLICABLE	RIGID COLUMN	URBIS	AXIA 2 S1	PETITJEAN	SHEET STEEL	6	GALVANISED	DAER
46100052	AUCKLAND ROAD	Scunthorpe	488576.55	410930.8	3	7002	00183830	01/04/1993 00:00	6	3	LESS THAN 30MPH	BACK OF FOOTPATH	800	SINGLE ARM	NOT APPLICABLE	RIGID COLUMN	URBIS	AXIA 2 S1	PETITJEAN	SHEET STEEL	6	GALVANISED	DAER
46100052	AUCKLAND ROAD	Scunthorpe	488588.86	410911.95	4	7003	00183831	01/04/1993 00:00	6	3	LESS THAN 30MPH	BACK OF FOOTPATH	800	SINGLE ARM	NOT APPLICABLE	RIGID COLUMN	URBIS	AXIA 2 S1	PETITJEAN	SHEET STEEL	6	GALVANISED	DAER
46100052	AUCKLAND ROAD	Scunthorpe	488580.51	410884.21	5	7004	00183832	01/04/1993 00:00	6	3	LESS THAN 30MPH	BACK OF FOOTPATH	800	SINGLE ARM	NOT APPLICABLE	RIGID COLUMN	URBIS	AXIA 2 S1	PETITJEAN	SHEET STEEL	6	GALVANISED	DAER
46100052	AUCKLAND ROAD	Scunthorpe	488582.46	410864.46	6	7005	00183833	01/04/1993 00:00	6	3	LESS THAN 30MPH	BACK OF FOOTPATH	800	SINGLE ARM	NOT APPLICABLE	RIGID COLUMN	URBIS	AXIA 2 S1	PETITJEAN	SHEET STEEL	6	GALVANISED	DAER
46100052	AUCKLAND ROAD	Scunthorpe	488585.73	410835.38	7	7006	00183834	01/04/1993 00:00	6	3	LESS THAN 30MPH	BACK OF FOOTPATH	800	SINGLE ARM	NOT APPLICABLE	RIGID COLUMN	URBIS	AXIA 2 S1	PETITJEAN	SHEET STEEL	6	GALVANISED	DAER
46100052	AUCKLAND ROAD	Scunthorpe	488589.27	410808.33	8	7007	00183835	01/04/1993 00:00	6	3	LESS THAN 30MPH	BACK OF FOOTPATH	800	SINGLE ARM	NOT APPLICABLE	RIGID COLUMN	URBIS	AXIA 2 S1	PETITJEAN	SHEET STEEL	6	GALVANISED	DAER
46100052	AUCKLAND ROAD	Scunthorpe	488592.36	410786.92	9	7008	00183836	01/04/1993 00:00	6	3	LESS THAN 30MPH	BACK OF FOOTPATH	800	SINGLE ARM	NOT APPLICABLE	RIGID COLUMN	URBIS	AXIA 2 S1	PETITJEAN	SHEET STEEL	6	GALVANISED	DAER
46100053	AUDERN ROAD	Bottesford Parish	489387.61	407633.3	1	7000	00183837	01/04/2001 00:00	3	1	LESS THAN 30MPH	VERGE	300	DOUBLE ARM	NOT APPLICABLE	RIGID COLUMN	URBIS	AXIA 2 S1	MALLATITE	TUBULAR STEEL	5	GALVANISED	STEPPED TUBULAR
46100053	AUDERN ROAD	Bottesford Parish	489147.83	407608.06	10	7009	00183846	01/04/2001 00:00	3	1	LESS THAN 30MPH	BACK OF FOOTPATH	300	SINGLE ARM	NOT APPLICABLE	RIGID COLUMN	URBIS	AXIA 2 S1	MALLATITE	TUBULAR STEEL	5	GALVANISED	STEPPED TUBULAR
46100053	AUDERN ROAD	Bottesford Parish	489131.43	407624.99	11	7010	00183847	01/04/2001 00:00	3	1	NOT ON A ROAD	BACK OF FOOTPATH	0	POST TOP	NOT APPLICABLE	MID HINGED	URBIS	AXIA 2 S1	PETITJEAN	SHEET STEEL	5	GALVANISED	LEVEN
46100053	AUDERN ROAD	Bottesford Parish	489100.33	407623.62	12	7011	00183848	01/04/2001 00:00	3	1	NOT ON A ROAD	BACK OF FOOTPATH	0	POST TOP	NOT APPLICABLE	MID HINGED	URBIS	AXIA 2 S1	PETITJEAN	SHEET STEEL	5	GALVANISED	LEVEN
46100053	AUDERN ROAD	Bottesford Parish	489071.03	407620.13	13	7012	00183849	01/04/2001 00:00	3	1	NOT ON A ROAD	BACK OF FOOTPATH	0	POST TOP	NOT APPLICABLE	MID HINGED	URBIS	AXIA 2 S1	PETITJEAN	SHEET STEEL	5	GALVANISED	LEVEN
46100053	AUDERN ROAD	Bottesford Parish	489361.54	407633.57	2	7001	00183838	01/04/2001 00:00	3	1	LESS THAN 30MPH	VERGE	300	SINGLE ARM	NOT APPLICABLE	RIGID COLUMN	URBIS	AXIA 2 S1	MALLATITE	TUBULAR STEEL	5	GALVANISED	STEPPED TUBULAR
46100053	AUDERN ROAD	Bottesford Parish	489336.54	407636.53	3	7002	00183839	01/04/2001 00:00	3	1	LESS THAN 30MPH	VERGE	300	SINGLE ARM	NOT APPLICABLE	RIGID COLUMN	URBIS	AXIA 2 S1	MALLATITE	TUBULAR STEEL	5	GALVANISED	STEPPED TUBULAR
46100053	AUDERN ROAD	Bottesford Parish	489309.12	407631.42	4	7003	00183840	01/04/2001 00:00	3	1	LESS THAN 30MPH	VERGE	300	SINGLE ARM	NOT APPLICABLE	RIGID COLUMN	URBIS	AXIA 2 S1	MALLATITE	TUBULAR STEEL	5	GALVANISED	STEPPED TUBULAR
46100053	AUDERN ROAD	Bottesford Parish	489286.15	407627.24	5	7004	00183841	01/04/2001 00:00	3	1	LESS THAN 30MPH	VERGE	300	SINGLE ARM	NOT APPLICABLE	RIGID COLUMN	URBIS	AXIA 2 S1	MALLATITE	TUBULAR STEEL	5	GALVANISED	STEPPED TUBULAR
46100053	AUDERN ROAD	Bottesford Parish	489257.65	407622.13	6	7005	00183842	01/04/2001 00:00	3	1	LESS THAN 30MPH	VERGE	300	SINGLE ARM	NOT APPLICABLE	RIGID COLUMN	URBIS	AXIA 2 S1	MALLATITE	TUBULAR STEEL	5	GALVANISED	STEPPED TUBULAR
46100053	AUDERN ROAD	Bottesford Parish	489229.89	407616.49	7	7006	00183843	01/04/2001 00:00	3	1	LESS THAN 30MPH	VERGE	300	SINGLE ARM	NOT APPLICABLE	RIGID COLUMN	URBIS	AXIA 2 S1	MALLATITE	TUBULAR STEEL	5	GALVANISED	STEPPED TUBULAR
46100053	AUDERN ROAD	Bottesford Parish	489210.26	407618.64	8	7007	00183844	01/04/2001 00:00	3	1	LESS THAN 30MPH	BACK OF FOOTPATH	300	SINGLE ARM	NOT APPLICABLE	RIGID COLUMN	URBIS	AXIA 2 S1	MALLATITE	TUBULAR STEEL	5	GALVANISED	STEPPED TUBULAR
46100053	AUDERN ROAD	Bottesford Parish	489179.45	407618.73	9	7008	00183845	01/04/2001 00:00	3	1	LESS THAN 30MPH	BACK OF FOOTPATH	300	SINGLE ARM	NOT APPLICABLE	RIGID COLUMN	URBIS	AXIA 2 S1	MALLATITE	TUBULAR STEEL	5	GALVANISED	STEPPED TUBULAR
46100054	AVENUE FONTENAY	Scunthorpe	487603.83	412468.9	1	7000	00183850	01/04/1995 00:00	2	3	LESS THAN 30MPH	BACK OF FOOTPATH	0	POST TOP	NOT APPLICABLE	RIGID COLUMN	URBIS	AXIA 2 S1	PETITJEAN	SHEET STEEL	5	GALVANISED	NIDD
46100054	AVENUE FONTENAY	Scunthorpe	487629.27	412461.21	2	7001	00183851	01/04/1995 00:00	2	3	LESS THAN 30MPH	VERGE	0	POST TOP	NOT APPLICABLE	RIGID COLUMN	URBIS	AXIA 2 S1	PETITJEAN	SHEET STEEL	5	GALVANISED	NIDD
46100054	AVENUE FONTENAY	Scunthorpe	487648.91	412476.23	3	7002	00183852	01/04/1995 00:00	2	3	LESS THAN 30MPH	VERGE	0	POST TOP	NOT APPLICABLE	RIGID COLUMN	URBIS	AXIA 2 S1	PETITJEAN	SHEET STEEL	5	GALVANISED	NIDD
46100054	AVENUE FONTENAY	Scunthorpe	487671.19	412477.97	4	7003	00183853	01/04/1995 00:00	2	3	LESS THAN 30MPH	VERGE	0	POST TOP	NOT APPLICABLE	RIGID COLUMN	URBIS	AXIA 2 S1	PETITJEAN	SHEET STEEL	5	GALVANISED	NIDD
46100055	AVENUE NOZAY	Broughton Parish	496141.8	409355.3	1	7000	00183854	01/04/1994 00:00	1	1	LESS THAN 30MPH	BACK OF FOOTPATH	0	POST TOP	NOT APPLICABLE	RIGID COLUMN	URBIS	AXIA 2 S1	PETITJEAN	SHEET STEEL	5	GALVANISED	NIDD
46100055	AVENUE NOZAY	Broughton Parish	496199.14	409507.2	10	7009	00183863	01/04/1994 00:00	1	1	LESS THAN 30MPH	BACK OF FOOTPATH	0	POST TOP	NOT APPLICABLE	RIGID COLUMN	URBIS	AXIA 2 S1	PETITJEAN	SHEET STEEL	5	GALVANISED	NIDD
46100055	AVENUE NOZAY	Broughton Parish	496127.99	409385.86	2	7001	00183855	01/04/1994 00:00	1	1	LESS THAN 30MPH	BACK OF FOOTPATH	0	POST TOP	NOT APPLICABLE	RIGID COLUMN	URBIS	AXIA 2 S1	PETITJEAN	SHEET STEEL	5	GALVANISED	NIDD
46100055	AVENUE NOZAY	Broughton Parish	496122.31	409411.06	3	7002	00183856	01/04/1994 00:00	1	1	LESS THAN 30MPH	BACK OF FOOTPATH	0	POST TOP	NOT APPLICABLE	RIGID COLUMN	URBIS	AXIA 2 S1	PETITJEAN	SHEET STEEL	5	GALVANISED	NIDD
46100055	AVENUE NOZAY	Broughton Parish	496117.23	409437.07	4	7003	00183857	01/04/1994 00:00	1	1	LESS THAN 30MPH	BACK OF FOOTPATH	0	POST TOP	NOT APPLICABLE	RIGID COLUMN	URBIS	AXIA 2 S1	PETITJEAN	SHEET STEEL	5	GALVANISED	NIDD
46100055	AVENUE NOZAY	Broughton Parish	496108.45	409472.14	5	7004	00183858	01/04/1994 00:00	1	1	LESS THAN 30MPH	BACK OF FOOTPATH	0	POST TOP	NOT APPLICABLE	RIGID COLUMN	URBIS	AXIA 2 S1	PETITJEAN	SHEET STEEL	5	GALVANISED	NIDD
46100055	AVENUE NOZAY	Broughton Parish	496103.31	409504.25	6	7005	00183859	01/04/1994 00:00	1	1	LESS THAN 30MPH	BACK OF FOOTPATH	0	POST TOP	NOT APPLICABLE	RIGID COLUMN	URBIS	AXIA 2 S1	PETITJEAN	SHEET STEEL	5	GALVANISED	NIDD
46100055	AVENUE NOZAY	Broughton Parish	496

46100075	BARLINGS AVENUE	Scunthorpe	489351.83	409009.57	2	7001	00184030	01/04/1993 00:00	2	4	LESS THAN 30MPH	BACK OF FOOTPATH	0	POST TOP	NOT APPLICABLE	RIGID COLUMN	URBIS	AXIA 2 S1	PETITJEAN	SHEET STEEL	6	GALVANISED	DAER
46100075	BARLINGS AVENUE	Scunthorpe	489358.39	409039.9	3	7002	00184031	01/04/1993 00:00	2	4	LESS THAN 30MPH	BACK OF FOOTPATH	0	POST TOP	NOT APPLICABLE	RIGID COLUMN	URBIS	AXIA 2 S1	PETITJEAN	SHEET STEEL	6	GALVANISED	DAER
46100075	BARLINGS AVENUE	Scunthorpe	489348.05	409069.04	4	7003	00184032	01/04/1993 00:00	2	4	LESS THAN 30MPH	BACK OF FOOTPATH	0	POST TOP	NOT APPLICABLE	RIGID COLUMN	URBIS	AXIA 2 S1	PETITJEAN	SHEET STEEL	6	GALVANISED	DAER
46100075	BARLINGS AVENUE	Scunthorpe	489364.36	409096.41	5	7004	00184033	01/04/1993 00:00	2	4	LESS THAN 30MPH	BACK OF FOOTPATH	0	POST TOP	NOT APPLICABLE	RIGID COLUMN	URBIS	AXIA 2 S1	PETITJEAN	SHEET STEEL	6	GALVANISED	DAER
46100075	BARLINGS AVENUE	Scunthorpe	489364.01	409125.21	6	7005	00184034	01/04/1993 00:00	2	4	LESS THAN 30MPH	BACK OF FOOTPATH	0	POST TOP	NOT APPLICABLE	RIGID COLUMN	URBIS	AXIA 2 S1	PETITJEAN	SHEET STEEL	6	GALVANISED	DAER
46100075	BARLINGS AVENUE	Scunthorpe	489386.04	409142.74	7	7006	00184035	01/04/1993 00:00	2	4	LESS THAN 30MPH	BACK OF FOOTPATH	0	POST TOP	NOT APPLICABLE	RIGID COLUMN	URBIS	AXIA 2 S1	PETITJEAN	SHEET STEEL	6	GALVANISED	DAER
46100075	BARLINGS AVENUE	Scunthorpe	489395.11	409172.92	8	7007	00184036	01/04/1993 00:00	2	4	LESS THAN 30MPH	BACK OF FOOTPATH	0	POST TOP	NOT APPLICABLE	RIGID COLUMN	URBIS	AXIA 2 S1	PETITJEAN	SHEET STEEL	6	GALVANISED	DAER
46100075	BARLINGS AVENUE	Scunthorpe	489421.77	409184.65	9	7008	00184037	01/04/1993 00:00	2	4	LESS THAN 30MPH	BACK OF FOOTPATH	0	POST TOP	NOT APPLICABLE	RIGID COLUMN	URBIS	AXIA 2 S1	PETITJEAN	SHEET STEEL	6	GALVANISED	DAER
46100076	BARLEY CLOSE	Kirton in Lindsey Parish	493618	399149	3	7001	04200204		NA	NA	NOT APPLICABLE	NOT APPLICABLE	NA	NOT APPLICA	NOT APPLICABLE	NOT APPLICABLE	WRTL	STELA LONG 12 LED	NOT APPLICA	NOT APPLICABLE	6	NOT APPLICABI	Not Applicable
46100077	BARNES CRESCENT	Scunthorpe	488323.1	411802.88	1	7000	00184041	01/04/1993 00:00	6	3	LESS THAN 30MPH	VERGE	300	SINGLE ARM	NOT APPLICABLE	RIGID COLUMN	URBIS	AXIA 2 S1	PETITJEAN	SHEET STEEL	5	GALVANISED	DAER
46100077	BARNES CRESCENT	Scunthorpe	488398.92	411979.21	10	7009	00184050	21/03/2022 00:00	6	3	LESS THAN 30MPH	BACK OF FOOTPATH	0	POST TOP	NOT APPLICABLE	RIGID COLUMN	URBIS	AXIA 2 S1	MALLATITE	TUBULAR STEEL	6	GALVANISED	TUBULAR
46100077	BARNES CRESCENT	Scunthorpe	488379.24	411973.63	11	7010	00184051	01/04/1993 00:00	6	3	LESS THAN 30MPH	BACK OF FOOTPATH	300	SINGLE ARM	NOT APPLICABLE	RIGID COLUMN	URBIS	AXIA 2 S1	PETITJEAN	SHEET STEEL	5	GALVANISED	DAER
46100077	BARNES CRESCENT	Scunthorpe	488344.64	411820.7	2	7001	00184042	01/04/1993 00:00	6	3	LESS THAN 30MPH	BACK OF FOOTPATH	300	SINGLE ARM	NOT APPLICABLE	RIGID COLUMN	URBIS	AXIA 2 S1	PETITJEAN	SHEET STEEL	5	GALVANISED	DAER
46100077	BARNES CRESCENT	Scunthorpe	488350.08	411844.96	3	7002	00184043	01/04/1993 00:00	6	3	LESS THAN 30MPH	VERGE	300	SINGLE ARM	NOT APPLICABLE	RIGID COLUMN	URBIS	AXIA 2 S1	PETITJEAN	SHEET STEEL	5	GALVANISED	DAER
46100077	BARNES CRESCENT	Scunthorpe	488362.45	411865.11	4	7003	00184044	01/04/1993 00:00	6	3	LESS THAN 30MPH	VERGE	300	SINGLE ARM	NOT APPLICABLE	RIGID COLUMN	URBIS	AXIA 2 S1	PETITJEAN	SHEET STEEL	5	GALVANISED	DAER
46100077	BARNES CRESCENT	Scunthorpe	488380.01	411876.81	5	7004	00184045	01/04/1993 00:00	6	3	LESS THAN 30MPH	BACK OF FOOTPATH	300	SINGLE ARM	NOT APPLICABLE	RIGID COLUMN	URBIS	AXIA 2 S1	PETITJEAN	SHEET STEEL	5	GALVANISED	DAER
46100077	BARNES CRESCENT	Scunthorpe	488386.09	411903.01	6	7005	00184046	01/04/1993 00:00	6	3	LESS THAN 30MPH	VERGE	300	SINGLE ARM	NOT APPLICABLE	RIGID COLUMN	URBIS	AXIA 2 S1	PETITJEAN	SHEET STEEL	5	GALVANISED	DAER
46100077	BARNES CRESCENT	Scunthorpe	488401.24	411927.21	7	7006	00184047	27/09/2024 00:00	6	3	LESS THAN 30MPH	VERGE	300	SINGLE ARM	NOT APPLICABLE	RIGID COLUMN	URBIS	AXIA 2 S1	MALLATITE	TUBULAR STEEL	6	GALVANISED	TUBULAR
46100077	BARNES CRESCENT	Scunthorpe	488419.06	411940.5	8	7007	00184048	01/04/1993 00:00	6	3	LESS THAN 30MPH	BACK OF FOOTPATH	300	SINGLE ARM	NOT APPLICABLE	RIGID COLUMN	URBIS	AXIA 2 S1	PETITJEAN	SHEET STEEL	5	GALVANISED	DAER
46100077	BARNES CRESCENT	Scunthorpe	488422.05	411970.17	9	7008	00184049	20/09/2021 00:00	6	3	LESS THAN 30MPH	BACK OF FOOTPATH	0	POST TOP	NOT APPLICABLE	RIGID COLUMN	URBIS	AXIA 2 S1	MALLATITE	TUBULAR STEEL	6	GALVANISED	TUBULAR
46100078	BARNETBY ROAD	Scunthorpe	488924.49	408135.18	1	7000	00184054	01/04/1985 00:00	3	4	LESS THAN 30MPH	BACK OF FOOTPATH	300	SINGLE ARM	NOT APPLICABLE	RIGID COLUMN	URBIS	AXIA 2 S1	PETITJEAN	SHEET STEEL	6	GALVANISED	DAER
46100078	BARNETBY ROAD	Scunthorpe	488674.64	408125.1	10	7009	00184063	01/04/1985 00:00	3	4	LESS THAN 30MPH	BACK OF FOOTPATH	300	SINGLE ARM	NOT APPLICABLE	RIGID COLUMN	URBIS	AXIA 2 S1	PETITJEAN	SHEET STEEL	6	GALVANISED	DAER
46100078	BARNETBY ROAD	Scunthorpe	488662.48	408147.97	11	7010	00184064	01/04/1985 00:00	3	4	LESS THAN 30MPH	BACK OF FOOTPATH	300	SINGLE ARM	NOT APPLICABLE	RIGID COLUMN	URBIS	AXIA 2 S1	PETITJEAN	SHEET STEEL	6	GALVANISED	DAER
46100078	BARNETBY ROAD	Scunthorpe	488670	408175.93	12	7011	00184065	01/04/1985 00:00	3	4	LESS THAN 30MPH	BACK OF FOOTPATH	300	SINGLE ARM	NOT APPLICABLE	RIGID COLUMN	URBIS	AXIA 2 S1	PETITJEAN	SHEET STEEL	6	GALVANISED	DAER
46100078	BARNETBY ROAD	Scunthorpe	488898.69	408143.24	2	7001	00184055	01/04/1985 00:00	3	4	LESS THAN 30MPH	FRONT OF FOOTPATH	300	SINGLE ARM	NOT APPLICABLE	RIGID COLUMN	URBIS	AXIA 2 S1	PETITJEAN	SHEET STEEL	6	GALVANISED	DAER
46100078	BARNETBY ROAD	Scunthorpe	488868.36	408142.07	3	7002	00184056	01/04/1985 00:00	3	4	LESS THAN 30MPH	FRONT OF FOOTPATH	300	SINGLE ARM	NOT APPLICABLE	RIGID COLUMN	URBIS	AXIA 2 S1	PETITJEAN	SHEET STEEL	6	GALVANISED	DAER
46100078	BARNETBY ROAD	Scunthorpe	488838.26	408132.39	4	7003	00184057	01/04/1985 00:00	3	4	LESS THAN 30MPH	BACK OF FOOTPATH	300	SINGLE ARM	NOT APPLICABLE	RIGID COLUMN	URBIS	AXIA 2 S1	PETITJEAN	SHEET STEEL	6	GALVANISED	DAER
46100078	BARNETBY ROAD	Scunthorpe	488807.61	408140.03	5	7004	00184058	01/04/1985 00:00	3	4	LESS THAN 30MPH	FRONT OF FOOTPATH	300	SINGLE ARM	NOT APPLICABLE	RIGID COLUMN	URBIS	AXIA 2 S1	PETITJEAN	SHEET STEEL	6	GALVANISED	DAER
46100078	BARNETBY ROAD	Scunthorpe	488780.19	408140.57	6	7005	00184059	01/04/1985 00:00	3	4	LESS THAN 30MPH	BACK OF FOOTPATH	300	SINGLE ARM	NOT APPLICABLE	RIGID COLUMN	URBIS	AXIA 2 S1	PETITJEAN	SHEET STEEL	6	GALVANISED	DAER
46100078	BARNETBY ROAD	Scunthorpe	488749.43	408138.5	7	7006	00184060	01/04/1985 00:00	3	4	LESS THAN 30MPH	BACK OF FOOTPATH	300	SINGLE ARM	NOT APPLICABLE	RIGID COLUMN	URBIS	AXIA 2 S1	PETITJEAN	SHEET STEEL	6	GALVANISED	DAER
46100078	BARNETBY ROAD	Scunthorpe	488724.16	408123.45	8	7007	00184061	01/04/1985 00:00	3	4	LESS THAN 30MPH	BACK OF FOOTPATH	300	SINGLE ARM	NOT APPLICABLE	RIGID COLUMN	URBIS	AXIA 2 S1	PETITJEAN	SHEET STEEL	6	GALVANISED	DAER
46100078	BARNETBY ROAD	Scunthorpe	488697.22	408119.19	9	7008	00184062	01/04/1985 00:00	3	4	LESS THAN 30MPH	BACK OF FOOTPATH	300	SINGLE ARM	NOT APPLICABLE	RIGID COLUMN	URBIS	AXIA 2 S1	PETITJEAN	SHEET STEEL	6	GALVANISED	DAER
46100079	BARNSIDE	Hibaldstow Parish	497910.04	402684.84	1	7000	00184066	01/04/2010 00:00	1	4	LESS THAN 30MPH	VERGE	0	POST TOP	NOT APPLICABLE	RIGID COLUMN	URBIS	AXIA 2 S1	MALLATITE	TUBULAR STEEL	6	GALVANISED	TUBULAR
46100079	BARNSIDE	Hibaldstow Parish	497899.77	402717.56	2	7001	00184067	01/04/2010 00:00	1	4	LESS THAN 30MPH	VERGE	0	POST TOP	NOT APPLICABLE	RIGID COLUMN	URBIS	AXIA 2 S1	MALLATITE	TUBULAR STEEL	6	GALVANISED	TUBULAR
46100080	BARNSTAPLE ROAD	Scunthorpe	487700.35	409506.52	1	7000	00184068	01/04/1980 00:00	5	2	LESS THAN 30MPH	BACK OF FOOTPATH	800	SINGLE ARM	NOT APPLICABLE	RIGID COLUMN	URBIS	AXIA 2 S1	PETITJEAN	SHEET STEEL	5	GALVANISED	DAER
46100080	BARNSTAPLE ROAD	Scunthorpe	487675.29	409515.43	2	7001	00184069	01/04/2015 00:00	5	2	LESS THAN 30MPH	BACK OF FOOTPATH	0	POST TOP	NOT APPLICABLE	RIGID COLUMN	URBIS	AXIA 2 S1	MALLATITE	TUBULAR STEEL	6	GALVANISED	TUBULAR
46100080	BARNSTAPLE ROAD	Scunthorpe	487652.89	409505.42	3FP	7002	00184070	28/08/2020 00:00	5	2	LESS THAN 30MPH	VERGE	0	POST TOP	NOT APPLICABLE	RIGID COLUMN	URBIS	AXIA 2 S1	MALLATITE	TUBULAR STEEL	6	GALVANISED	TUBULAR
46100080	BARNSTAPLE ROAD	Scunthorpe	487640.32	409489.52	4	7003	00184071	28/08/2020 00:00	5	2	LESS THAN 30MPH	BACK OF FOOTPATH	0	POST TOP	NOT APPLICABLE	RIGID COLUMN	URBIS	AXIA 2 S1	MALLATITE	TUBULAR STEEL	6	GALVANISED	TUBULAR
46100080	BARNSTAPLE ROAD	Scunthorpe	487614.57	409486.74	5	7004	00184072	28/08/2020 00:00	5	2	LESS THAN 30MPH	VERGE	0	POST TOP	NOT APPLICABLE	RIGID COLUMN	URBIS	AXIA 2 S1	MALLATITE	TUBULAR STEEL	6	GALVANISED	TUBULAR
46100081	BARNSTON WAY	Burton upon Stather Parish	487128.59	417542.12	1	7000	00184073	01/04/2008 00:00	2	3	LESS THAN 30MPH	VERGE	0	POST TOP	NOT APPLICABLE	RIGID COLUMN	URBIS	AXIA 2 S1	MALLATITE	TUBULAR STEEL	6	GALVANISED	STEPPED TUBULAR
46100081	BARNSTON WAY	Burton upon Stather Parish	487101.3	417530.1	2	7001	00184074	01/04/2008 00:00	2	3	LESS THAN 30MPH	BACK OF FOOTPATH	0	POST TOP	NOT APPLICABLE	RIGID COLUMN	URBIS	AXIA 2 S1	MALLATITE	TUBULAR STEEL	6	GALVANISED	STEPPED TUBULAR
46100081	BARNSTON WAY	Burton upon Stather Parish	487083.79	417499.56	3	7002	00184075	01/04/2008 00:00	2	3	LESS THAN 30MPH	VERGE	0	POST TOP	NOT APPLICABLE	RIGID COLUMN	URBIS	AXIA 2 S1	MALLATITE	TUBULAR STEEL	6	GALVANISED	STEPPED TUBULAR
46100081	BARNSTON WAY	Burton upon Stather Parish	487061.96	417487.86	4	7003	00184076	01/04/2008 00:00	2	3	LESS THAN 30MPH	VERGE	0	POST TOP	NOT APPLICABLE	RIGID COLUMN	URBIS	AXIA 2 S1	STANTON	TUBULAR STEEL	6	GALVANISED	STEPPED TUBULAR
46100081	BARNSTON WAY	Burton upon Stather Parish	487089.38	417454.79	5	7004	00184077	01/04/2008 00:00	2	3	LESS THAN 30MPH	VERGE	0	POST TOP	NOT APPLICABLE	MID HINGED	URBIS	AXIA 2 S1	VALMONT ST	SHEET STEEL	5	GALVANISED	LEVEN
46100081	BARNSTON WAY	Burton upon Stather Parish	487047.01	417457.18	6	7005	00184078	01/04/2008 00:00	2	3	LESS THAN 30MPH	VERGE	0	POST TOP	NOT APPLICABLE	RIGID COLUMN	URBIS	AXIA 2 S1	STANTON	TUBULAR STEEL	6	GALVANISED	STEPPED TUBULAR
46100081	BARNSTON WAY	Burton upon Stather Parish	487034.51	417441.88	7	7006	00184079	01/04/2008 00:00	2	3	LESS THAN 30MPH	VERGE	0	POST TOP	NOT APPLICABLE	RIGID COLUMN	URBIS	AXIA 2 S1	MALLATITE	TUBULAR STEEL	6	GALVANISED	STEPPED TUBULAR
46100081	BARNSTON WAY	Burton upon Stather Parish	487039.41	417398.76	8	7007	00184080	01/04/2008 00:00	2	3	LESS THAN 30MPH	VERGE	0	POST TOP	NOT APPLICABLE	RIGID COLUMN	URBIS	AXIA 2 S1	MALLATITE	TUBULAR STEEL	6	GALVANISED	STEPPED TUBULAR
46100081	BARNSTON WAY	Burton upon Stather Parish	487031.29	417377.62	9	7008	00184081	01/04/2008 00:00	2	3	LESS THAN 30MPH	VERGE	0	POST TOP	NOT APPLICABLE	RIGID COLUMN	URBIS	AXIA 2 S1	MALLATITE	TUBULAR STEEL	6	GALVANISED	STEPPED TUBULAR
46100082	BARRACLOUGHS LANE	Barton upon Humber Parish	502840.55	423015.58	1	7000	00184083	01/04/2012 00:00	5	2	LESS THAN 30MPH	VERGE	0	POST TOP	NOT APPLICABLE	RIGID COLUMN	URBIS	AXIA 2 S1	MALLATITE	TUBULAR STEEL	6	GALVANISED	TUBULAR
46100082	BARRACLOUGHS LANE	Barton upon Humber Parish	502806.86	423008.55	2	7001	00184084	30/10/2019 00:00	5	2	LESS THAN 30MPH	BACK OF FOOTPATH	0	POST TOP	NOT APPLICABLE	RIGID COLUMN	URBIS	AXIA 2 S1	MALLATITE	TUBULAR STEEL	6	GALVANISED	TUBULAR
46100083	BARRICK CLOSE	Barrow upon Humber Parish	507396.34	421237.5	1	7000	00184085	01/04/1985 00:00	4	1	LESS THAN 30MPH	BACK OF FOOTPATH	0	POST TOP	NOT APPLICABLE	RIGID COLUMN	URBIS	AXIA 2 S1	PETITJEAN	TUBULAR STEEL	5	GALVANISED	METRO
46100083	BARRICK CLOSE	Barrow upon Humber Parish	507417.12	421214.69	2	7001	00184086	01/04/1985 00:00	4	1	LESS THAN 30MPH	BACK OF FOOTPATH	0	POST TOP	NOT APPLICABLE	RIGID COLUMN	URBIS	AXIA 2 S1	PETITJEAN	TUBULAR STEEL	5	GALVANISED	METRO
46100083	BARRICK CLOSE	Barrow upon Humber Parish	507445.09	421211.64	3	7002	00184087	01/04/1985 00:00	4	1	LESS THAN 30MPH	BACK OF FOOTPATH	0	POST TOP	NOT APPLICABLE	RIGID COLUMN	URBIS	AXIA 2 S1	PETITJEAN	TUBULAR STEEL	5	GALVANISED	METRO
46100083	BARRICK CLOSE	Barrow upon Humber Parish	507469.12	421229.87	4	7003	00184088	01/04/1985 00:00	4	1	LESS THAN 30MPH	BACK OF FOOTPATH	0	POST TOP	NOT APPLICABLE	RIGID COLUMN	URBIS	AXIA 2 S1	PETITJEAN	TUBULAR STEEL	6	GALVANISED	STEPPED TUBULAR
46100084	BARROW ROAD	Barton upon Humber Parish	503315.59	421779.65	1	7000	00184089	07/04/2022 00:00	5	2	LESS THAN 30MPH	BACK OF FOOTPATH	500	SINGLE ARM	NOT APPLICABLE	RIGID COLUMN	URBIS	AXIA 2 S1	MALLATITE	TUBULAR STEEL	10	GALVANISED	TUBULAR
46100084	BARROW ROAD	Barton upon Humber Parish	503628.9	421747.6	10	7009	00184098	01/04/1976 00:00	5	2	LESS THAN 30MPH	BACK OF FOOTPATH	1500	SINGLE ARM	MID GREY	RIGID COLUMN	URBIS	AXIA 2 S1	PETITJEAN	SHEET STEEL	10	PAINTED	THAMES
46100084	BARROW ROAD	Barton upon Humber Parish	503666.86	421752.18	11	7010	00184099	01/04/1976 00:00	5	2	LESS THAN 30MPH	BACK OF FOOTPATH	1500	SINGLE ARM	MID GREY	RIGID COLUMN	URBIS	AXIA 2 S1	PETITJEAN	SHEET STEEL	10	PAINTED	THAMES
46100084	BARROW ROAD	Barton upon Humber Parish	503697.77	421750.1	12	7011	00184100	01/04/1976 00:00	5	2	LESS THAN 30MPH	BACK OF FOOTPATH	1500	SINGLE ARM	MID GREY	RIGID COLUMN	URBIS	AXIA 2 S1	PETITJEAN	SHEET STEEL	10	PAINTED	THAMES
46100084	BARROW ROAD	Barton upon Humber Parish	503731.68	421744.09	13	7012	00184101	01/04/1976 00:00	5	2	LESS THAN 30MPH	BACK OF FOOTPATH	1500	SINGLE ARM	MID GREY	RIGID COLUMN	URBIS	AXIA 2 S1	PETITJEAN	SHEET STEEL	10	PAINTED	THAMES
46100084	BARROW ROAD	Barton upon Humber Parish	503766.21	421738.61	14	7013	00184102	01/04/1976 00:00	5	2	LESS THAN 30MPH	BACK OF FOOTPATH	1500	SINGLE ARM	MID GREY	RIGID COLUMN	URBIS	AXIA 2 S1	PETITJEAN	SHEET STEEL	10	PAINTED	THAMES
46100084	BARROW ROAD	Barton upon Humber Parish	503800.57	421735.02	15	7014	00184103	01/04/2010 00:00	5	2	LESS THAN 30MPH	BACK OF FOOTPATH	1000	SINGLE ARM	NOT APPLICABLE	RIGID COLUMN	URBIS	AXIA 2 S1	VALMONT ST	SHEET STEEL	10	GALVANISED	THAMES
46100084	BARROW ROAD	Barton upon Humber Parish	503840.97	421740.6	16	7015	00184104	07/04/2022 00:00	5	2	LESS THAN 30MPH	VERGE	500	SINGLE ARM	NOT APPLICABLE	RIGID COLUMN	URBIS	AXIA 2 S1	MALLATITE	TUBULAR STEEL	10	GALVANISED	TUBULAR
46100084	BARROW ROAD	Barton upon Humber Parish	503878.19	421723.95	17	7016	00184105	01/04/2010 00:00	5	2	LESS THAN 30MPH	VERGE	1000	SINGLE ARM	NOT APPLICABLE	RIGID COLUMN	URBIS	AXIA 2 S1	VALMONT ST	SHEET STEEL	10	GALVANISED	THAMES
46100084	BARROW ROAD	Barton upon Humber Parish	503900.88	421734.7	18	7017	00184106	01/04/1984 00:00	5	2	LESS THAN 30MPH	BACK OF FOOTPATH	1500	SINGLE ARM	MID GREY	RIGID COLUMN	URBIS	AXIA 2 S1	PETITJEAN	SHEET STEEL	10	PAINTED	THAMES
46100084	BARROW ROAD	Barton upon Humber Parish	503921.53	421719.47	19	7018	00184107	07/04/2022 00:00	5	2	LESS THAN 30MPH	VERGE	500	SINGLE ARM	NOT APPLICABLE	RIGID COLUMN	URBIS	AXIA 2 S1	MALLATITE	TUBULAR STEEL	10	GALVANISED	TUBULAR
46100084	BARROW ROAD	Barton upon Humber Parish	503348.38	421772.58	2	7001	00184090	01/04/1976 00:00	5	2	LESS THAN 30MPH	BACK OF FOOTPATH	1500	SINGLE ARM	MID GREY	RIGID COLUMN	URBIS	AXIA 2 S1	PETITJEAN	SHEET STEEL	10	PAINTED	THAMES
46100084	BARROW ROAD	Barton upon Humber Parish	503961.92	421727.14	20	7019	00184108	07/04/2022 00:00	5	2	LESS THAN 30MPH	VERGE	500	SINGLE ARM	NOT APPLICABLE	RIGID COLUMN	URBIS	AXIA 2 S1	MALLATITE	TUBULAR STEEL	10	GALVANISED	TUBULAR
46100084	BARROW ROAD	Barton upon Humber Parish	504006.89	421711.52	21	7020	00184109	01/04/1984 00:00	5	2	LESS THAN 30MPH	BACK OF FOOTPATH	1500	SINGLE ARM	MID GREY	RIGID COLUMN	URBIS	AXIA 2 S1	PETITJEAN	SHEET STEEL	10	PAINTED	THAMES
46100084	BARROW ROAD	Barton upon Humber Parish	504055.32	421723.41	22	7021	00184110	01/04/2010 00:00	5	2	LESS THAN 30MPH	BACK OF FOOTPATH	1000	SINGLE ARM	NOT APPLICABLE	RIGID COLUMN	URBIS	AXIA 2 S1	VALMONT ST	SHEET STEEL	10	GALVANISED	THAMES
46100084	BARROW ROAD	Barton upon Humber Parish	504085.57	421714.93	23FP	7022	00184111	01/04/1984 00:00	5	2	LESS THAN 30MPH	FRONT OF FOOTPATH	1500	SINGLE ARM	MID GREY	RIGID COLUMN	URBIS	AXIA 2 S1	PETITJEAN	SHEET STEEL	10	PAINTED	THAMES
46100084	BARROW ROAD	Barton upon Humber Parish	504122.17	421719.73	24	7023	00184112	01/04/1984 00:00	5	2	LESS THAN 30MPH	FRONT OF FOOTPATH	1500	SINGLE ARM	MID GREY	RIGID COLUMN	URBIS	AXIA 2 S1	PETITJEAN	SHEET STEEL	10	PAINTED	THAMES
46100084	BARROW ROAD	Barton upon Humber Parish	504157.59	421723.71	25	7024	00184113	01/04/2006 00:00	5	2	LESS THAN 30MPH	VERGE	1500	SINGLE ARM	MID GREY	RIGID COLUMN	URBIS	AXIA 2 S1	PETITJEAN	SHEET STEEL	10	PAINTED	THAMES
46100084	BARROW ROAD	Barton upon Humber Parish	504193.67	421726.61	26	7025	00184114	01/04/2006 00:00	5	2	LESS THAN 30MPH	VERGE	1500	SINGLE ARM	MID GREY	RIGID COLUMN	URBIS	AXIA 2 S1	PETITJEAN	SHEET STEEL	10	PAINTED	THAMES
46100084	BARROW ROAD	Barton upon Humber Parish	504227.46	421729.13	27	7026	00184115	01/04/2006 00:00	5	2	LESS THAN 30MPH	VERGE	1500	SINGLE ARM	MID GREY	RIGID COLUMN	URBIS	AXIA 2 S1	PETITJEAN	SHEET STEEL	10	PAINTED	THAMES
46100084	BARROW ROAD	Barton upon Humber Parish	504264.37	421732.84	28	7027	00184116	01/04/2006 00:00	5	2	LESS THAN 30MPH	VERGE	1500	SINGLE ARM	MID GREY	RIGID COLUMN	URBIS	AXIA 2 S1	PETITJEAN	SHEET STEEL	10	PAINTED	THAMES
46100084	BARROW ROAD	Barton upon Humber Parish	504309	421737	29	7028	04200104	01/04/2006 00:00	5	2	LESS THAN 30MPH	VERGE	1500	SINGLE ARM	NOT APPLICABLE	RIGID COLUMN	URBIS	AXIA 2 S1	PETITJEAN	SHEET STEEL	10	GALVANISED	THAMES
46100084	BARROW ROAD	Barton upon Humber Parish	503385.48	421767.43	3	7002	00184091	01/04/1976 00:00	5	2	LESS THAN 30MPH	FRONT OF FOOTPATH	1500	SINGLE ARM	MID GREY	RIGID COLUMN	URBIS	AXIA 2 S1	PETITJEAN	SHEET STEEL	10	PAINTED	THAMES
46100084	BARROW ROAD	Barton upon Humber Parish	504343	421741	30	7029	04200105	01/04/2006 00:00	5	2	LESS THAN 30MPH	VERGE	1500	SINGLE ARM	NOT APPLICABLE	RIGID COLUMN	URBIS	AXIA 2 S1	PETITJEAN	SHEET STEEL	10	GALVANISED	THAMES
46100084	BARROW ROAD	Barton upon Humber Parish	503425.02	421761.13	4	7003	00184092	01/04/1976 00:00	5	2	LESS THAN 30MPH	BACK OF FOOTPATH	1500	SINGLE ARM	MID GREY	RIGID COLUMN	URBIS	AXIA 2 S1	PETITJEAN	SHEET STEEL	10	PAINTED	THAMES
46100084	BARROW ROAD	Barton upon Humber Parish	503461.97	421757.15	5	7004	00184093	01/04/1976 00:00	5	2	LESS THAN 30MPH	BACK OF FOOTPATH	1500	SINGLE ARM	MID GREY	RIGID COLUMN	URBIS	AXIA 2 S1	PETITJEAN	SHEET STEEL	10	PAINTED	THAMES
46100084	BARROW ROAD	Barton upon Humber Parish	503495.63	421756.22	6	7005	00184094	01/04/1976 00:00	5	2	LESS THAN 30MPH	BACK OF FOOTPATH	1500	SINGLE ARM	MID GREY	RIGID COLUMN	URBIS	AXIA 2 S1	PETITJEAN	SHEET STEEL	10	PAINTED	THAMES
46100084	BARROW ROAD	Barton upon Humber Parish	503527.4	421743.17	7	7006	00184095	01/04/1976 00:00	5	2	LESS THAN 30MPH	BACK OF FOOTPATH	1500	SINGLE ARM	MID GREY	RIGID COLUMN	URBIS	AXIA 2 S1	PETITJEAN	SHEET STEEL	10	PAINTED	THAMES
46100084	BARROW ROAD	Barton upon Humber Parish	503561.1	421745	8FP	7007	00184096	01/04/1976 00:00	5	2	LESS THAN 30MPH	BACK OF FOOTPATH	1500	SINGLE ARM	MID GREY	RIGID COLUMN	URBIS	AXIA 2 S1	PETITJEAN	SHEET STEEL	10	PAINTED	THAMES
46100084	BARROW ROAD	Barton upon Humber Parish	503596.23	421746.37	9	7008	00184097	01/04/1976 00:00	5	2	LESS THAN 30MPH	BACK OF FOOTPATH	1500	SINGLE ARM	MID GREY	RIGID COLUMN	URBIS	AXIA 2 S1	PETITJEAN	SHEET STEEL	10	PAINTED	THAMES
46100085	BARTON STREET	Barrow upon Humber Parish	507335.32	421611.53	1	7000	00184117	01/04/1973 00:00	4	1	LESS THAN 30MPH	BACK OF FOOTPATH	800	SINGLE ARM	NOT APPLICABLE	RIGID COLUMN	URBIS	AXIA 2 S1	PETITJEAN	SHEET STEEL	5	GALVANISED	DAER
46100085	BARTON STREET	Barrow upon Humber Parish	507302.41	421604.24	2	7001	00184118	01/04/1973 00:00	4	1	LESS THAN 30MPH	BACK OF FOOTPATH	800	SINGLE ARM	NOT APPLICABLE	RIGID COLUMN	URBIS	AXIA 2 S1	PETITJEAN	SHEET STEEL	5	GALVANISED	DAER
46100085	BARTON STREET	Barrow upon Humber Parish	507265.33	421607.22	3	7002	00184119	01/04/1973 00:00	4	1	LESS THAN 30MPH	BACK OF FOOTPATH	800	SINGLE ARM	NOT APPLICABLE	RIGID COLUMN	URBIS	AXIA 2 S1	PETITJEAN	SHEET STEEL	6	GALVANISED	DAER
46100085	BARTON STREET	Barrow

46100114	BELTON ROAD	Belton Parish	480958.63	406754.67	13	7012	00184310	31/10/2023 00:00	5	3	LESS THAN 30MPH	BACK OF FOOTPATH	0	POST TOP	NOT APPLICABLE	RIGID COLUMN	URBIS	AXIA 2 S1	MALLATITE	TUBULAR STEEL	6	GALVANISED	TUBULAR
46100114	BELTON ROAD	Belton Parish	480981.99	406756.07	14	7013	00184311	31/10/2023 00:00	5	3	LESS THAN 30MPH	BACK OF FOOTPATH	0	POST TOP	NOT APPLICABLE	RIGID COLUMN	URBIS	AXIA 2 S1	MALLATITE	TUBULAR STEEL	6	GALVANISED	TUBULAR
46100114	BELTON ROAD	Belton Parish	481007.53	406748.55	15	7014	00184312	31/10/2023 00:00	5	3	LESS THAN 30MPH	BACK OF FOOTPATH	0	POST TOP	NOT APPLICABLE	RIGID COLUMN	URBIS	AXIA 2 S1	MALLATITE	TUBULAR STEEL	6	GALVANISED	TUBULAR
46100114	BELTON ROAD	Belton Parish	481018.5	406785.96	16	7015	00184313	31/10/2023 00:00	5	3	LESS THAN 30MPH	BACK OF FOOTPATH	0	POST TOP	NOT APPLICABLE	RIGID COLUMN	URBIS	AXIA 2 S1	MALLATITE	TUBULAR STEEL	6	GALVANISED	TUBULAR
46100114	BELTON ROAD	Belton Parish	481045.11	406791.6	17	7016	00184314	31/10/2023 00:00	5	3	LESS THAN 30MPH	BACK OF FOOTPATH	0	POST TOP	NOT APPLICABLE	RIGID COLUMN	URBIS	AXIA 2 S1	MALLATITE	TUBULAR STEEL	6	GALVANISED	TUBULAR
46100114	BELTON ROAD	Belton Parish	481070.13	406794.22	18	7017	00184315	31/10/2023 00:00	5	3	LESS THAN 30MPH	BACK OF FOOTPATH	0	POST TOP	NOT APPLICABLE	RIGID COLUMN	URBIS	AXIA 2 S1	MALLATITE	TUBULAR STEEL	6	GALVANISED	TUBULAR
46100114	BELTON ROAD	Belton Parish	481100.05	406789.69	19	7018	00184316	31/10/2023 00:00	5	3	LESS THAN 30MPH	BACK OF FOOTPATH	0	POST TOP	NOT APPLICABLE	RIGID COLUMN	URBIS	AXIA 2 S1	MALLATITE	TUBULAR STEEL	6	GALVANISED	TUBULAR
46100114	BELTON ROAD	Belton Parish	480654.8	406807.48	2	7001	00184299	01/04/1995 00:00	5	3	LESS THAN 30MPH	BACK OF FOOTPATH	0	POST TOP	NOT APPLICABLE	RIGID COLUMN	URBIS	AXIA 2 S1	PETITJEAN	SHEET STEEL	5	GALVANISED	NIDD
46100114	BELTON ROAD	Belton Parish	481115.44	406814.13	20	7019	00184317	31/10/2023 00:00	5	3	LESS THAN 30MPH	BACK OF FOOTPATH	0	POST TOP	NOT APPLICABLE	RIGID COLUMN	URBIS	AXIA 2 S1	MALLATITE	TUBULAR STEEL	6	GALVANISED	TUBULAR
46100114	BELTON ROAD	Belton Parish	481110.3	406840.37	21	7020	00184318	31/10/2023 00:00	5	3	LESS THAN 30MPH	BACK OF FOOTPATH	0	POST TOP	NOT APPLICABLE	RIGID COLUMN	URBIS	AXIA 2 S1	MALLATITE	TUBULAR STEEL	6	GALVANISED	TUBULAR
46100114	BELTON ROAD	Belton Parish	481093.63	406859.99	22	7021	00184319	01/04/1993 00:00	5	3	LESS THAN 30MPH	BACK OF FOOTPATH	300	SINGLE ARM	NOT APPLICABLE	RIGID COLUMN	URBIS	AXIA 2 S1	PETITJEAN	SHEET STEEL	5	GALVANISED	DAER
46100114	BELTON ROAD	Belton Parish	481081.28	406892.54	23	7022	00184320	01/04/1993 00:00	5	3	LESS THAN 30MPH	BACK OF FOOTPATH	300	SINGLE ARM	NOT APPLICABLE	RIGID COLUMN	URBIS	AXIA 2 S1	PETITJEAN	SHEET STEEL	5	GALVANISED	DAER
46100114	BELTON ROAD	Belton Parish	481077.96	406923.84	24	7023	00184321	01/04/1993 00:00	5	3	LESS THAN 30MPH	VERGE	300	SINGLE ARM	NOT APPLICABLE	RIGID COLUMN	URBIS	AXIA 2 S1	PETITJEAN	SHEET STEEL	5	GALVANISED	DAER
46100114	BELTON ROAD	Belton Parish	481054.71	406948.58	25	7024	00184322	01/04/1993 00:00	5	3	LESS THAN 30MPH	VERGE	300	SINGLE ARM	NOT APPLICABLE	RIGID COLUMN	URBIS	AXIA 2 S1	PETITJEAN	SHEET STEEL	5	GALVANISED	DAER
46100114	BELTON ROAD	Belton Parish	481043.44	406969.82	26	7025	00184323	01/04/1993 00:00	5	3	LESS THAN 30MPH	VERGE	300	SINGLE ARM	NOT APPLICABLE	RIGID COLUMN	URBIS	AXIA 2 S1	PETITJEAN	SHEET STEEL	5	GALVANISED	DAER
46100114	BELTON ROAD	Belton Parish	480682.54	406792.53	3	7002	00184300	01/04/1995 00:00	5	3	LESS THAN 30MPH	BACK OF FOOTPATH	0	POST TOP	NOT APPLICABLE	RIGID COLUMN	URBIS	AXIA 2 S1	PETITJEAN	SHEET STEEL	5	GALVANISED	NIDD
46100114	BELTON ROAD	Belton Parish	480700.82	406781.51	4	7003	00184301	01/04/1995 00:00	5	3	LESS THAN 30MPH	BACK OF FOOTPATH	0	POST TOP	NOT APPLICABLE	RIGID COLUMN	URBIS	AXIA 2 S1	PETITJEAN	SHEET STEEL	5	GALVANISED	NIDD
46100114	BELTON ROAD	Belton Parish	480725.44	406768.17	5	7004	00184302	01/04/1995 00:00	5	3	LESS THAN 30MPH	BACK OF FOOTPATH	0	POST TOP	NOT APPLICABLE	RIGID COLUMN	URBIS	AXIA 2 S1	PETITJEAN	SHEET STEEL	5	GALVANISED	NIDD
46100114	BELTON ROAD	Belton Parish	480751.01	406755.28	6	7005	00184303	01/04/1995 00:00	5	3	LESS THAN 30MPH	BACK OF FOOTPATH	0	POST TOP	NOT APPLICABLE	RIGID COLUMN	URBIS	AXIA 2 S1	PETITJEAN	SHEET STEEL	5	GALVANISED	NIDD
46100114	BELTON ROAD	Belton Parish	480781.41	406743.71	7	7006	00184304	01/04/1995 00:00	5	3	LESS THAN 30MPH	BACK OF FOOTPATH	0	POST TOP	NOT APPLICABLE	RIGID COLUMN	URBIS	AXIA 2 S1	PETITJEAN	SHEET STEEL	5	GALVANISED	NIDD
46100114	BELTON ROAD	Belton Parish	480806.41	406742.23	8	7007	00184305	01/04/1995 00:00	5	3	LESS THAN 30MPH	BACK OF FOOTPATH	0	POST TOP	NOT APPLICABLE	RIGID COLUMN	URBIS	AXIA 2 S1	PETITJEAN	SHEET STEEL	5	GALVANISED	NIDD
46100114	BELTON ROAD	Belton Parish	480850.59	406744.84	9	7008	00184306	01/04/1995 00:00	5	3	LESS THAN 30MPH	BACK OF FOOTPATH	0	POST TOP	NOT APPLICABLE	RIGID COLUMN	URBIS	AXIA 2 S1	PETITJEAN	SHEET STEEL	5	GALVANISED	NIDD
46100115	BELTON ROAD	Epworth Parish	478069.73	403928.35	1	7000	00184324	01/04/1991 00:00	5	3	LESS THAN 30MPH	BACK OF FOOTPATH	1000	SINGLE ARM	NOT APPLICABLE	RIGID COLUMN	URBIS	AXIA 2 S1	PETITJEAN	SHEET STEEL	8	GALVANISED	THAMES
46100115	BELTON ROAD	Epworth Parish	478065.32	404206.62	10	7009	00184333	01/04/1991 00:00	5	3	LESS THAN 30MPH	BACK OF FOOTPATH	1250	SINGLE ARM	NOT APPLICABLE	RIGID COLUMN	URBIS	AXIA 2 S1	PETITJEAN	SHEET STEEL	8	GALVANISED	THAMES
46100115	BELTON ROAD	Epworth Parish	478054.06	404239.58	11	7010	00184334	01/04/1991 00:00	5	3	LESS THAN 30MPH	BACK OF FOOTPATH	1250	SINGLE ARM	NOT APPLICABLE	RIGID COLUMN	URBIS	AXIA 2 S1	PETITJEAN	SHEET STEEL	8	GALVANISED	THAMES
46100115	BELTON ROAD	Epworth Parish	478054.9	404274.4	12	7011	00184335	01/04/1991 00:00	5	3	LESS THAN 30MPH	BACK OF FOOTPATH	1250	SINGLE ARM	NOT APPLICABLE	RIGID COLUMN	URBIS	AXIA 2 S1	PETITJEAN	SHEET STEEL	8	GALVANISED	THAMES
46100115	BELTON ROAD	Epworth Parish	478057.48	404310.72	13	7012	00184336	01/04/1991 00:00	5	3	BETWEEN 30-50 MPH	BACK OF FOOTPATH	1250	SINGLE ARM	NOT APPLICABLE	RIGID COLUMN	URBIS	AXIA 2 S1	PETITJEAN	SHEET STEEL	8	GALVANISED	THAMES
46100115	BELTON ROAD	Epworth Parish	478061.29	404343.11	14	7013	00184337	01/04/1991 00:00	5	3	BETWEEN 30-50 MPH	BACK OF FOOTPATH	1250	SINGLE ARM	NOT APPLICABLE	RIGID COLUMN	URBIS	AXIA 2 S1	PETITJEAN	SHEET STEEL	8	GALVANISED	THAMES
46100115	BELTON ROAD	Epworth Parish	478065.24	404371.09	15	7014	00184338	01/04/1991 00:00	5	3	BETWEEN 30-50 MPH	BACK OF FOOTPATH	1250	SINGLE ARM	NOT APPLICABLE	RIGID COLUMN	URBIS	AXIA 2 S1	PETITJEAN	SHEET STEEL	8	GALVANISED	THAMES
46100115	BELTON ROAD	Epworth Parish	478069.87	404400.21	16	7015	00184339	01/04/1991 00:00	5	3	BETWEEN 30-50 MPH	BACK OF FOOTPATH	1250	SINGLE ARM	NOT APPLICABLE	RIGID COLUMN	URBIS	AXIA 2 S1	PETITJEAN	SHEET STEEL	8	GALVANISED	THAMES
46100115	BELTON ROAD	Epworth Parish	478077	404432.08	17	7016	00184340	01/04/1991 00:00	5	3	BETWEEN 30-50 MPH	BACK OF FOOTPATH	1250	SINGLE ARM	NOT APPLICABLE	RIGID COLUMN	URBIS	AXIA 2 S1	PETITJEAN	SHEET STEEL	8	GALVANISED	THAMES
46100115	BELTON ROAD	Epworth Parish	478085.76	404463.66	18	7017	00184341	01/04/1991 00:00	5	3	BETWEEN 30-50 MPH	BACK OF FOOTPATH	1250	SINGLE ARM	NOT APPLICABLE	RIGID COLUMN	URBIS	AXIA 2 S1	PETITJEAN	SHEET STEEL	8	GALVANISED	THAMES
46100115	BELTON ROAD	Epworth Parish	478091.09	404489.63	19	7018	00184342	01/04/1991 00:00	5	3	BETWEEN 30-50 MPH	BACK OF FOOTPATH	1250	SINGLE ARM	NOT APPLICABLE	RIGID COLUMN	URBIS	AXIA 2 S1	PETITJEAN	SHEET STEEL	8	GALVANISED	THAMES
46100115	BELTON ROAD	Epworth Parish	478076.86	403959.47	2	7001	00184325	01/04/1991 00:00	5	3	LESS THAN 30MPH	BACK OF FOOTPATH	1000	SINGLE ARM	NOT APPLICABLE	RIGID COLUMN	URBIS	AXIA 2 S1	PETITJEAN	SHEET STEEL	8	GALVANISED	THAMES
46100115	BELTON ROAD	Epworth Parish	478097.72	404522.66	20	7019	00184343	01/04/1991 00:00	5	3	BETWEEN 30-50 MPH	BACK OF FOOTPATH	1250	SINGLE ARM	NOT APPLICABLE	RIGID COLUMN	URBIS	AXIA 2 S1	PETITJEAN	SHEET STEEL	8	GALVANISED	THAMES
46100115	BELTON ROAD	Epworth Parish	478102.39	404551.63	21	7020	00184344	01/04/1991 00:00	5	3	BETWEEN 30-50 MPH	BACK OF FOOTPATH	1250	SINGLE ARM	NOT APPLICABLE	RIGID COLUMN	URBIS	AXIA 2 S1	PETITJEAN	SHEET STEEL	8	GALVANISED	THAMES
46100115	BELTON ROAD	Epworth Parish	478105.14	404585.16	22	7021	00184345	01/04/1991 00:00	5	3	BETWEEN 30-50 MPH	BACK OF FOOTPATH	1250	SINGLE ARM	NOT APPLICABLE	RIGID COLUMN	URBIS	AXIA 2 S1	PETITJEAN	SHEET STEEL	8	GALVANISED	THAMES
46100115	BELTON ROAD	Epworth Parish	478118.48	404617.65	23	7022	00184346	01/04/1991 00:00	5	3	BETWEEN 30-50 MPH	BACK OF FOOTPATH	1250	SINGLE ARM	NOT APPLICABLE	RIGID COLUMN	URBIS	AXIA 2 S1	PETITJEAN	SHEET STEEL	8	GALVANISED	THAMES
46100115	BELTON ROAD	Epworth Parish	478125.93	404650.64	24	7023	00184347	01/04/1991 00:00	5	3	BETWEEN 30-50 MPH	BACK OF FOOTPATH	1250	SINGLE ARM	NOT APPLICABLE	RIGID COLUMN	URBIS	AXIA 2 S1	PETITJEAN	SHEET STEEL	8	GALVANISED	THAMES
46100115	BELTON ROAD	Epworth Parish	478136.69	404676.47	25	7024	00184348	01/04/1991 00:00	5	3	BETWEEN 30-50 MPH	BACK OF FOOTPATH	1250	SINGLE ARM	NOT APPLICABLE	RIGID COLUMN	URBIS	AXIA 2 S1	PETITJEAN	SHEET STEEL	8	GALVANISED	THAMES
46100115	BELTON ROAD	Epworth Parish	478143.3	404707.45	26	7025	00184349	01/04/1991 00:00	5	3	BETWEEN 30-50 MPH	BACK OF FOOTPATH	1250	SINGLE ARM	NOT APPLICABLE	RIGID COLUMN	URBIS	AXIA 2 S1	PETITJEAN	SHEET STEEL	8	GALVANISED	THAMES
46100115	BELTON ROAD	Epworth Parish	478146.14	404739.73	27	7026	00184350	01/04/1991 00:00	5	3	BETWEEN 30-50 MPH	BACK OF FOOTPATH	1250	SINGLE ARM	NOT APPLICABLE	RIGID COLUMN	URBIS	AXIA 2 S1	PETITJEAN	SHEET STEEL	8	GALVANISED	THAMES
46100115	BELTON ROAD	Epworth Parish	478141.17	404769.57	28	7027	00184351	01/04/1991 00:00	5	3	BETWEEN 30-50 MPH	VERGE	1250	SINGLE ARM	NOT APPLICABLE	RIGID COLUMN	URBIS	AXIA 2 S1	PETITJEAN	SHEET STEEL	8	GALVANISED	THAMES
46100115	BELTON ROAD	Epworth Parish	478152.02	404803.72	29	7028	00184352	01/04/1991 00:00	5	3	BETWEEN 30-50 MPH	BACK OF FOOTPATH	1250	SINGLE ARM	NOT APPLICABLE	RIGID COLUMN	URBIS	AXIA 2 S1	PETITJEAN	SHEET STEEL	8	GALVANISED	THAMES
46100115	BELTON ROAD	Epworth Parish	478092.29	403988.17	3	7002	00184326	01/04/1991 00:00	5	3	LESS THAN 30MPH	BACK OF FOOTPATH	1000	SINGLE ARM	NOT APPLICABLE	RIGID COLUMN	URBIS	AXIA 2 S1	PETITJEAN	SHEET STEEL	8	GALVANISED	THAMES
46100115	BELTON ROAD	Epworth Parish	478154.64	404834.2	30	7029	00184353	01/04/1991 00:00	5	3	BETWEEN 30-50 MPH	BACK OF FOOTPATH	1250	SINGLE ARM	NOT APPLICABLE	RIGID COLUMN	URBIS	AXIA 2 S1	PETITJEAN	SHEET STEEL	8	GALVANISED	THAMES
46100115	BELTON ROAD	Epworth Parish	478158.48	404865.86	31FP	7030	00184354	01/04/1991 00:00	5	3	BETWEEN 30-50 MPH	BACK OF FOOTPATH	1250	SINGLE ARM	NOT APPLICABLE	RIGID COLUMN	URBIS	AXIA 2 S1	PETITJEAN	SHEET STEEL	8	GALVANISED	THAMES
46100115	BELTON ROAD	Epworth Parish	478164.22	404897.43	32	7031	00184355	01/04/1991 00:00	5	3	BETWEEN 30-50 MPH	BACK OF FOOTPATH	1250	SINGLE ARM	NOT APPLICABLE	RIGID COLUMN	URBIS	AXIA 2 S1	PETITJEAN	SHEET STEEL	8	GALVANISED	THAMES
46100115	BELTON ROAD	Epworth Parish	478173.55	404929.72	33	7032	00184356	01/04/1991 00:00	5	3	BETWEEN 30-50 MPH	BACK OF FOOTPATH	1250	SINGLE ARM	NOT APPLICABLE	RIGID COLUMN	URBIS	AXIA 2 S1	PETITJEAN	SHEET STEEL	8	GALVANISED	THAMES
46100115	BELTON ROAD	Epworth Parish	478181.63	404960.83	34	7033	00184357	01/04/1991 00:00	5	3	BETWEEN 30-50 MPH	BACK OF FOOTPATH	1250	SINGLE ARM	NOT APPLICABLE	RIGID COLUMN	URBIS	AXIA 2 S1	PETITJEAN	SHEET STEEL	8	GALVANISED	THAMES
46100115	BELTON ROAD	Epworth Parish	478189.41	404990.39	35	7034	00184358	01/04/1991 00:00	5	3	BETWEEN 30-50 MPH	BACK OF FOOTPATH	1250	SINGLE ARM	NOT APPLICABLE	RIGID COLUMN	URBIS	AXIA 2 S1	PETITJEAN	SHEET STEEL	8	GALVANISED	THAMES
46100115	BELTON ROAD	Epworth Parish	478200.18	405020.88	36	7035	00184359	01/04/1991 00:00	5	3	BETWEEN 30-50 MPH	BACK OF FOOTPATH	1250	SINGLE ARM	NOT APPLICABLE	RIGID COLUMN	URBIS	AXIA 2 S1	PETITJEAN	SHEET STEEL	8	GALVANISED	THAMES
46100115	BELTON ROAD	Epworth Parish	478206.34	405052.34	37	7036	00184360	01/04/1991 00:00	5	3	BETWEEN 30-50 MPH	BACK OF FOOTPATH	1250	SINGLE ARM	NOT APPLICABLE	RIGID COLUMN	URBIS	AXIA 2 S1	PETITJEAN	SHEET STEEL	8	GALVANISED	THAMES
46100115	BELTON ROAD	Epworth Parish	478211.26	405085.72	38	7037	00184361	01/04/1991 00:00	5	3	BETWEEN 30-50 MPH	BACK OF FOOTPATH	1250	SINGLE ARM	NOT APPLICABLE	RIGID COLUMN	URBIS	AXIA 2 S1	PETITJEAN	SHEET STEEL	8	GALVANISED	THAMES
46100115	BELTON ROAD	Epworth Parish	478085.21	404026.75	4	7003	00184327	01/04/1991 00:00	5	3	LESS THAN 30MPH	BACK OF FOOTPATH	1000	SINGLE ARM	NOT APPLICABLE	RIGID COLUMN	URBIS	AXIA 2 S1	PETITJEAN	SHEET STEEL	8	GALVANISED	THAMES
46100115	BELTON ROAD	Epworth Parish	478086.62	404050.67	5	7004	00184328	01/04/1991 00:00	5	3	LESS THAN 30MPH	BACK OF FOOTPATH	1000	SINGLE ARM	NOT APPLICABLE	RIGID COLUMN	URBIS	AXIA 2 S1	PETITJEAN	SHEET STEEL	8	GALVANISED	THAMES
46100115	BELTON ROAD	Epworth Parish	478084.36	404075.79	6	7005	00184329	01/04/1991 00:00	5	3	LESS THAN 30MPH	BACK OF FOOTPATH	1000	SINGLE ARM	NOT APPLICABLE	RIGID COLUMN	URBIS	AXIA 2 S1	PETITJEAN	SHEET STEEL	8	GALVANISED	THAMES
46100115	BELTON ROAD	Epworth Parish	478077.58	404112.31	7	7006	00184330	01/04/1991 00:00	5	3	LESS THAN 30MPH	BACK OF FOOTPATH	1000	SINGLE ARM	NOT APPLICABLE	RIGID COLUMN	URBIS	AXIA 2 S1	PETITJEAN	SHEET STEEL	8	GALVANISED	THAMES
46100115	BELTON ROAD	Epworth Parish	478072.16	404142.03	8	7007	00184331	01/04/1991 00:00	5	3	LESS THAN 30MPH	BACK OF FOOTPATH	1000	SINGLE ARM	NOT APPLICABLE	RIGID COLUMN	URBIS	AXIA 2 S1	PETITJEAN	SHEET STEEL	8	GALVANISED	THAMES
46100115	BELTON ROAD	Epworth Parish	478062.45	404180.43	9	7008	00184332	01/04/1991 00:00	5	3	LESS THAN 30MPH	BACK OF FOOTPATH	1000	SINGLE ARM	NOT APPLICABLE	RIGID COLUMN	URBIS	AXIA 2 S1	PETITJEAN	SHEET STEEL	8	GALVANISED	THAMES
46100116	BELVEDERE DRIVE	Scunthorpe	488390.6	409396.3	1	7000	00184362	01/04/1993 00:00	5	4	LESS THAN 30MPH	BACK OF FOOTPATH	800	SINGLE ARM	NOT APPLICABLE	RIGID COLUMN	URBIS	AXIA 2 S1	PETITJEAN	SHEET STEEL	6	GALVANISED	DAER
46100116	BELVEDERE DRIVE	Scunthorpe	488391.34	409367.81	2	7001	00184363	01/04/1993 00:00	5	4	LESS THAN 30MPH	BACK OF FOOTPATH	800	SINGLE ARM	NOT APPLICABLE	RIGID COLUMN	URBIS	AXIA 2 S1	PETITJEAN	SHEET STEEL	6	GALVANISED	DAER
46100116	BELVEDERE DRIVE	Scunthorpe	488392.29	409337.18	3	7002	00184364	01/04/1993 00:00	5	4	LESS THAN 30MPH	BACK OF FOOTPATH	800	SINGLE ARM	NOT APPLICABLE	RIGID COLUMN	URBIS	AXIA 2 S1	PETITJEAN	SHEET STEEL	6	GALVANISED	DAER
46100116	BELVEDERE DRIVE	Scunthorpe	488393.64	409307.24	4	7003	00184365	01/04/1993 00:00	5	4	LESS THAN 30MPH	BACK OF FOOTPATH	800	SINGLE ARM	NOT APPLICABLE	RIGID COLUMN	URBIS	AXIA 2 S1	PETITJEAN	SHEET STEEL	6	GALVANISED	DAER
46100116	BELVEDERE DRIVE	Scunthorpe	488394.88	409278.75	5	7004	00184366	01/04/1993 00:00	5	4	LESS THAN 30MPH	BACK OF FOOTPATH	800	SINGLE ARM	NOT APPLICABLE	RIGID COLUMN	URBIS	AXIA 2 S1	PETITJEAN	SHEET STEEL	6	GALVANISED	DAER
46100116	BELVEDERE DRIVE	Scunthorpe	488395.92	409241.23	6	7005	00184367	01/04/1993 00:00	5	4	LESS THAN 30MPH	BACK OF FOOTPATH	800	SINGLE ARM	NOT APPLICABLE	RIGID COLUMN	URBIS	AXIA 2 S1	PETITJEAN	SHEET STEEL	6	GALVANISED	DAER
46100116	BELVEDERE DRIVE	Scunthorpe	488396.85	409217.65	7	7006	00184368	01/04/1993 00:00	5	4	LESS THAN 30MPH	BACK OF FOOTPATH	800	SINGLE ARM	NOT APPLICABLE	RIGID COLUMN	URBIS	AXIA 2 S1	PETITJEAN	SHEET STEEL	6	GALVANISED	DAER
46100116	BELVEDERE DRIVE	Scunthorpe	488390.33	409192.38	8	7007	00184369	01/04/1993 00:00	5	4	LESS THAN 30MPH	BACK OF FOOTPATH	800	SINGLE ARM	NOT APPLICABLE	RIGID COLUMN	URBIS	AXIA 2 S1	PETITJEAN	SHEET STEEL	6	GALVANISED	DAER
46100117	BENNETT DRIVE	Winterton Parish	492230.36	418149.72	1	7000	00184370	01/04/2005 00:00	1	1	LESS THAN 30MPH	BACK OF FOOTPATH	0	POST TOP	NOT APPLICABLE	RIGID COLUMN	URBIS	AXIA 2 S1	T AND L	TUBULAR STEEL	5	GALVANISED	STEPPED TUBULAR
46100117	BENNETT DRIVE	Winterton Parish	492207.43	418138.97	2	7001	00184371	01/04/2005 00:00	1	1	LESS THAN 30MPH	BACK OF FOOTPATH	0	POST TOP	NOT APPLICABLE	RIGID COLUMN	URBIS	AXIA 2 S1	T AND L	TUBULAR STEEL	5	GALVANISED	STEPPED TUBULAR
46100117	BENNETT DRIVE	Winterton Parish	492197.93	418101.14	3	7002	00184372	01/04/2005 00:00	1	1	LESS THAN 30MPH	BACK OF FOOTPATH	0	POST TOP	NOT APPLICABLE	RIGID COLUMN	URBIS	AXIA 2 S1	T AND L	TUBULAR STEEL	5	GALVANISED	STEPPED TUBULAR
46100117	BENNETT DRIVE	Winterton Parish	492197.93	418083.59	4	7003	00184373	01/04/2005 00:00	1	1	LESS THAN 30MPH	BACK OF FOOTPATH	0	POST TOP	NOT APPLICABLE	RIGID COLUMN	URBIS	AXIA 2 S1	T AND L	TUBULAR STEEL	5	GALVANISED	STEPPED TUBULAR
46100118	BENNETT ROAD	Scunthorpe	490258.87	409354.06	1	7000	00184374	21/01/2022 00:00	3	2	LESS THAN 30MPH	BACK OF FOOTPATH	0	POST TOP	NOT APPLICABLE	RIGID COLUMN	URBIS	AXIA 2 S1	MALLATITE	TUBULAR STEEL	6	GALVANISED	TUBULAR
46100118	BENNETT ROAD	Scunthorpe	490226.21	409339.1	2	7001	00184375	28/11/2020 00:00	3	2	LESS THAN 30MPH	BACK OF FOOTPATH	0	POST TOP	NOT APPLICABLE	RIGID COLUMN	URBIS	AXIA 2 S1	MALLATITE	TUBULAR STEEL	6	GALVANISED	TUBULAR
46100118	BENNETT ROAD	Scunthorpe	490191.91	409359.01	3	7002	00184376	28/11/2020 00:00	3	2	LESS THAN 30MPH	BACK OF FOOTPATH	0	POST TOP	NOT APPLICABLE	RIGID COLUMN	URBIS	AXIA 2 S1	MALLATITE	TUBULAR STEEL	6	GALVANISED	TUBULAR
46100118	BENNETT ROAD	Scunthorpe	490171.29	409385.29	4	7003	00184377	28/11/2020 00:00	3	2	LESS THAN 30MPH	VERGE	0	POST TOP	NOT APPLICABLE	RIGID COLUMN	URBIS	AXIA 2 S1	MALLATITE	TUBULAR STEEL	6	GALVANISED	TUBULAR
46100119	BERKELEY STREET	Scunthorpe	489529.14	411704.86	1	7000	00184378	01/04/1985 00:00	4	4	LESS THAN 30MPH	BACK OF FOOTPATH	1000	SINGLE ARM	MID GREY	RIGID COLUMN	URBIS	AXIA 2 S1	PETITJEAN	SHEET STEEL	8	PAINTED	THAMES
46100119	BERKELEY STREET	Scunthorpe	489286.7	411661.58	10	7009	00184387	01/04/1985 00:00	4	4	LESS THAN 30MPH	BACK OF FOOTPATH	1000	SINGLE ARM	MID GREY	RIGID COLUMN	URBIS	AXIA 2 S1	PETITJEAN	SHEET STEEL	8	PAINTED	THAMES
46100119	BERKELEY STREET	Scunthorpe	489249.92	411666.15	11	7010	00184388	01/04/1985 00:00	4	4	LESS THAN 30MPH	BACK OF FOOTPATH	1000	SINGLE ARM	MID GREY	RIGID COLUMN	URBIS	AXIA 2 S1	PETITJEAN	SHEET STEEL	8	PAINTED	THAMES
46100119	BERKELEY STREET	Scunthorpe	489216.78	411649.2	12	7011	00184389	01/04/1985 00:00	4	4	LESS THAN 30MPH	BACK OF FOOTPATH	1000	SINGLE ARM	MID GREY	RIGID COLUMN	URBIS	AXIA 2 S1	PETITJEAN	SHEET STEEL	8	PAINTED	THAMES
46100119	BERKELEY STREET	Scunthorpe	489193.51	411656.05	13	7012	00184390	01/04/1985 00:00	4	4	LESS THAN 30MPH	BACK OF FOOTPATH	1000	SINGLE ARM	MID GREY	RIGID COLUMN	URBIS	AXIA 2 S1	PETITJEAN	SHEET STEEL	8	PAINTED	THAMES
46100119	BERKELEY STREET	Scunthorpe	489162.6	411639.38	14FP	7013	00184391	01/04/1985 00:00	4	4	LESS THAN 30MPH	BACK OF FOOTPATH	1000	SINGLE ARM	MID GREY	RIGID COLUMN	URBIS	AXIA 2 S1	PETITJEAN	SHEET STEEL	8	PAINTED	THAMES
46100119	BERKELEY STREET	Scunthorpe	489144.59	411647.45	15	7014	00184392	01/04/1985 00:00	4	4	LESS THAN 30MPH	BACK OF FOOTPATH	1000	SINGLE ARM	MID GREY	RIGID COLUMN	URBIS	AXIA 2 S1	PETITJEAN	SHEET STEEL	8	PAINTED	THAMES
46100119	BERKELEY STREET	Scunthorpe	489115.31	411630.86	16	7015	00184393	01/04/2002 00:00	4	4	LESS THAN 30MPH	BACK OF FOOTPATH	0	POST TOP	NOT APPLICABLE	RIGID COLUMN	URBIS	AXIA 2 S1	MALLATITE	TUBULAR STEEL	6	GALVANISED	STEPPED TUBULAR
46100119	BERKELEY STREET	Scunthorpe	489080.37	411635.69	17	7016	00184394	01/04/2002 00:00	4	4	LESS THAN 30MPH	BACK OF FOOTPATH	0	POST TOP	NOT APPLICABLE	RIGID COLUMN	URBIS	AXIA 2 S1	MALLATITE	TUBULAR STEEL	6	GALVANISED	STEPPED TUBULAR
46100119	BERKELEY STREET	Scunthorpe	489050.61	411620.12	18	7017	00184395	16/06/2020 00:00	4	4	LESS THAN 30MPH	BACK OF FOOTPATH	0	POST TOP	NOT APPLICABLE	RIGID COLUMN	URBIS	AXIA 2 S1	MALLATITE	TUBULAR STEEL	6	GALVANISED	TUBULAR
46100119	BERKELEY STREET	Scunthorpe	489019.66	411614.63	19	7018	00184396	01/04/2005 00:00	4	4	LESS THAN 30MPH	BACK OF FOOTPATH	0	POST TOP	NOT APPLICABLE	RIGID

46100145	BONBY GROVE	Scunthorpe	488862.49	408025.45	3	7002	00184554	01/04/2007 00:00	3	4	LESS THAN 30MPH	VERGE	0	POST TOP	NOT APPLICABLE	RIGID COLUMN	URBIS	AXIA 2 S1	CU	TUBULAR STEEL	5	GALVANISED	STEPPED TUBULAR
46100146	BONNYHALE ROAD	Crowle Parish	478585.41	411501.47	1	7000	00184555	01/04/1985 00:00	5	1	LESS THAN 30MPH	ON POLE	300	SINGLE ARM	NOT APPLICABLE	POLE MOUNTED	URBIS	AXIA 2 S1	WOODEN PO	WOOD	5	NOT APPLICABI	Not Applicable
46100146	BONNYHALE ROAD	Crowle Parish	478615.88	411462.5	2	7001	00184556	01/04/1985 00:00	5	1	LESS THAN 30MPH	ON POLE	300	SINGLE ARM	NOT APPLICABLE	POLE MOUNTED	URBIS	AXIA 2 S1	WOODEN PO	WOOD	5	NOT APPLICABI	Not Applicable
46100146	BONNYHALE ROAD	Crowle Parish	478645.63	411424.25	3	7002	00184557	01/04/1985 00:00	5	1	LESS THAN 30MPH	ON POLE	300	SINGLE ARM	NOT APPLICABLE	POLE MOUNTED	URBIS	AXIA 2 S1	WOODEN PO	WOOD	5	NOT APPLICABI	Not Applicable
46100149	BOSTON CLOSE	Winterton Parish	492162.1	418303.12	1	7000	00184558	01/04/1988 00:00	1	1	LESS THAN 30MPH	VERGE	0	POST TOP	MID GREY	RIGID COLUMN	URBIS	AXIA 2 S1	PETITJEAN	SHEET STEEL	5	PAINTED	NIDD
46100149	BOSTON CLOSE	Winterton Parish	492170.22	418333.01	2	7001	00184559	01/04/1988 00:00	1	1	LESS THAN 30MPH	VERGE	0	POST TOP	MID GREY	RIGID COLUMN	URBIS	AXIA 2 S1	PETITJEAN	SHEET STEEL	5	PAINTED	NIDD
46100149	BOSTON CLOSE	Winterton Parish	492195.22	418336.5	3	7002	00184560	01/04/1988 00:00	1	1	LESS THAN 30MPH	VERGE	0	POST TOP	MID GREY	RIGID COLUMN	URBIS	AXIA 2 S1	PETITJEAN	SHEET STEEL	5	PAINTED	NIDD
46100150	BOTTESFORD AVENUE	Scunthorpe	489899.98	408202.03	1	7000	00184561	20/12/2019 00:00	1	3	LESS THAN 30MPH	BACK OF FOOTPATH	0	POST TOP	NOT APPLICABLE	RIGID COLUMN	URBIS	AXIA 2 S1	MALLATITE	TUBULAR STEEL	6	GALVANISED	TUBULAR
46100150	BOTTESFORD AVENUE	Scunthorpe	489827.75	408410.95	10	7009	00184570	20/12/2019 00:00	1	3	LESS THAN 30MPH	BACK OF FOOTPATH	0	POST TOP	NOT APPLICABLE	RIGID COLUMN	URBIS	AXIA 2 S1	MALLATITE	TUBULAR STEEL	6	GALVANISED	TUBULAR
46100150	BOTTESFORD AVENUE	Scunthorpe	489816.52	408439.75	11	7010	00184571	20/12/2019 00:00	1	3	LESS THAN 30MPH	BACK OF FOOTPATH	0	POST TOP	NOT APPLICABLE	RIGID COLUMN	URBIS	AXIA 2 S1	MALLATITE	TUBULAR STEEL	6	GALVANISED	TUBULAR
46100150	BOTTESFORD AVENUE	Scunthorpe	489823.37	408472.81	12	7011	00184572	20/12/2019 00:00	1	3	LESS THAN 30MPH	BACK OF FOOTPATH	0	POST TOP	NOT APPLICABLE	RIGID COLUMN	URBIS	AXIA 2 S1	MALLATITE	TUBULAR STEEL	6	GALVANISED	TUBULAR
46100150	BOTTESFORD AVENUE	Scunthorpe	489815.05	408512.34	13	7012	00184573	20/12/2019 00:00	1	3	LESS THAN 30MPH	BACK OF FOOTPATH	0	POST TOP	NOT APPLICABLE	RIGID COLUMN	URBIS	AXIA 2 S1	MALLATITE	TUBULAR STEEL	6	GALVANISED	TUBULAR
46100150	BOTTESFORD AVENUE	Scunthorpe	489869.96	408201.98	2	7001	00184562	20/12/2019 00:00	1	3	LESS THAN 30MPH	BACK OF FOOTPATH	0	POST TOP	NOT APPLICABLE	RIGID COLUMN	URBIS	AXIA 2 S1	MALLATITE	TUBULAR STEEL	6	GALVANISED	TUBULAR
46100150	BOTTESFORD AVENUE	Scunthorpe	489839.98	408208.35	3	7002	00184563	20/12/2019 00:00	1	3	LESS THAN 30MPH	BACK OF FOOTPATH	0	POST TOP	NOT APPLICABLE	RIGID COLUMN	URBIS	AXIA 2 S1	MALLATITE	TUBULAR STEEL	6	GALVANISED	TUBULAR
46100150	BOTTESFORD AVENUE	Scunthorpe	489833.52	408243.42	4	7003	00184564	20/12/2019 00:00	1	3	LESS THAN 30MPH	BACK OF FOOTPATH	0	POST TOP	NOT APPLICABLE	RIGID COLUMN	URBIS	AXIA 2 S1	MALLATITE	TUBULAR STEEL	6	GALVANISED	TUBULAR
46100150	BOTTESFORD AVENUE	Scunthorpe	489838.86	408279.98	5	7004	00184565	20/12/2019 00:00	1	3	LESS THAN 30MPH	BACK OF FOOTPATH	0	POST TOP	NOT APPLICABLE	RIGID COLUMN	URBIS	AXIA 2 S1	MALLATITE	TUBULAR STEEL	6	GALVANISED	TUBULAR
46100150	BOTTESFORD AVENUE	Scunthorpe	489828.07	408300.69	6	7005	00184566	20/12/2019 00:00	1	3	LESS THAN 30MPH	BACK OF FOOTPATH	0	POST TOP	NOT APPLICABLE	RIGID COLUMN	URBIS	AXIA 2 S1	MALLATITE	TUBULAR STEEL	6	GALVANISED	TUBULAR
46100150	BOTTESFORD AVENUE	Scunthorpe	489835.3	408322.66	7	7006	00184567	20/12/2019 00:00	1	3	LESS THAN 30MPH	BACK OF FOOTPATH	0	POST TOP	NOT APPLICABLE	RIGID COLUMN	URBIS	AXIA 2 S1	MALLATITE	TUBULAR STEEL	6	GALVANISED	TUBULAR
46100150	BOTTESFORD AVENUE	Scunthorpe	489824.9	408343.66	8	7007	00184568	20/12/2019 00:00	1	3	LESS THAN 30MPH	BACK OF FOOTPATH	0	POST TOP	NOT APPLICABLE	RIGID COLUMN	URBIS	AXIA 2 S1	MALLATITE	TUBULAR STEEL	6	GALVANISED	TUBULAR
46100150	BOTTESFORD AVENUE	Scunthorpe	489822.17	408378.07	9	7008	00184569	20/12/2019 00:00	1	3	LESS THAN 30MPH	BACK OF FOOTPATH	0	POST TOP	NOT APPLICABLE	RIGID COLUMN	URBIS	AXIA 2 S1	MALLATITE	TUBULAR STEEL	6	GALVANISED	TUBULAR
46100151	BOTTESFORD LANE	Bottesford Parish	489755.93	407872.73	1	7000	00184574	01/04/1985 00:00	3	1	LESS THAN 30MPH	BACK OF FOOTPATH	1000	SINGLE ARM	NOT APPLICABLE	RIGID COLUMN	URBIS	AXIA 2 S1	PETITJEAN	SHEET STEEL	8	GALVANISED	THAMES
46100151	BOTTESFORD LANE	Bottesford Parish	489734.65	407573.74	10	7009	00184583	03/08/2018 00:00	3	1	LESS THAN 30MPH	VERGE	1000	SINGLE ARM	NOT APPLICABLE	RIGID COLUMN	URBIS	AXIA 2 S1	MALLATITE	TUBULAR STEEL	8	GALVANISED	TUBULAR
46100151	BOTTESFORD LANE	Bottesford Parish	489741.35	407542.53	11	7010	00184584	01/04/2010 00:00	3	1	LESS THAN 30MPH	BACK OF FOOTPATH	1000	SINGLE ARM	NOT APPLICABLE	RIGID COLUMN	URBIS	AXIA 2 S1	VALMONT ST	SHEET STEEL	8	GALVANISED	THAMES
46100151	BOTTESFORD LANE	Bottesford Parish	489748.76	407514.12	12	7011	00184585	01/04/1980 00:00	3	1	LESS THAN 30MPH	BACK OF FOOTPATH	1000	SINGLE ARM	NOT APPLICABLE	RIGID COLUMN	URBIS	AXIA 2 S1	PETITJEAN	SHEET STEEL	8	GALVANISED	THAMES
46100151	BOTTESFORD LANE	Bottesford Parish	489759.36	407478.2	13	7012	00184586	03/08/2018 00:00	3	1	LESS THAN 30MPH	BACK OF FOOTPATH	1000	SINGLE ARM	NOT APPLICABLE	RIGID COLUMN	URBIS	AXIA 2 S1	MALLATITE	TUBULAR STEEL	8	GALVANISED	TUBULAR
46100151	BOTTESFORD LANE	Bottesford Parish	489768.57	407446.83	14	7013	00184587	03/08/2018 00:00	3	1	LESS THAN 30MPH	BACK OF FOOTPATH	1000	SINGLE ARM	NOT APPLICABLE	RIGID COLUMN	URBIS	AXIA 2 S1	MALLATITE	TUBULAR STEEL	8	GALVANISED	TUBULAR
46100151	BOTTESFORD LANE	Bottesford Parish	489778	407416.71	15	7014	00184588	01/04/1980 00:00	3	1	LESS THAN 30MPH	BACK OF FOOTPATH	1000	SINGLE ARM	NOT APPLICABLE	RIGID COLUMN	URBIS	AXIA 2 S1	PETITJEAN	SHEET STEEL	8	GALVANISED	THAMES
46100151	BOTTESFORD LANE	Bottesford Parish	489789.45	407400.89	16	7015	00184589	03/08/2018 00:00	3	1	LESS THAN 30MPH	VERGE	1000	SINGLE ARM	NOT APPLICABLE	RIGID COLUMN	URBIS	AXIA 2 S1	MALLATITE	TUBULAR STEEL	8	GALVANISED	TUBULAR
46100151	BOTTESFORD LANE	Bottesford Parish	489809.26	407392.67	17	7016	00184590	01/04/1980 00:00	3	1	LESS THAN 30MPH	VERGE	1000	SINGLE ARM	NOT APPLICABLE	RIGID COLUMN	URBIS	AXIA 2 S1	PETITJEAN	SHEET STEEL	8	GALVANISED	THAMES
46100151	BOTTESFORD LANE	Bottesford Parish	489822.13	407366.51	18	7017	00184591	01/04/2013 00:00	3	1	LESS THAN 30MPH	VERGE	1000	SINGLE ARM	NOT APPLICABLE	RIGID COLUMN	URBIS	AXIA 2 S1	VALMONT ST	SHEET STEEL	8	GALVANISED	THAMES
46100151	BOTTESFORD LANE	Bottesford Parish	489843.83	407350.27	19	7018	00184592	03/08/2018 00:00	3	1	LESS THAN 30MPH	VERGE	1000	SINGLE ARM	NOT APPLICABLE	RIGID COLUMN	URBIS	AXIA 2 S1	MALLATITE	TUBULAR STEEL	8	GALVANISED	TUBULAR
46100151	BOTTESFORD LANE	Bottesford Parish	489741.95	407841.55	2	7001	00184575	01/04/1980 00:00	3	1	LESS THAN 30MPH	BACK OF FOOTPATH	1000	SINGLE ARM	NOT APPLICABLE	RIGID COLUMN	URBIS	AXIA 2 S1	PETITJEAN	SHEET STEEL	8	GALVANISED	THAMES
46100151	BOTTESFORD LANE	Bottesford Parish	489739.45	407807.54	3	7002	00184576	03/08/2018 00:00	3	1	LESS THAN 30MPH	BACK OF FOOTPATH	1000	SINGLE ARM	NOT APPLICABLE	RIGID COLUMN	URBIS	AXIA 2 S1	MALLATITE	TUBULAR STEEL	8	GALVANISED	TUBULAR
46100151	BOTTESFORD LANE	Bottesford Parish	489736.72	407774.62	4FP	7003	00184577	01/04/2010 00:00	3	1	LESS THAN 30MPH	BACK OF FOOTPATH	1000	SINGLE ARM	NOT APPLICABLE	RIGID COLUMN	URBIS	AXIA 2 S1	VALMONT ST	SHEET STEEL	8	GALVANISED	THAMES
46100151	BOTTESFORD LANE	Bottesford Parish	489733.63	407740.39	5	7004	00184578	01/04/2010 00:00	3	1	LESS THAN 30MPH	BACK OF FOOTPATH	1000	SINGLE ARM	NOT APPLICABLE	RIGID COLUMN	URBIS	AXIA 2 S1	VALMONT ST	SHEET STEEL	8	GALVANISED	THAMES
46100151	BOTTESFORD LANE	Bottesford Parish	489731.07	407708.52	6	7005	00184579	01/04/2010 00:00	3	1	LESS THAN 30MPH	BACK OF FOOTPATH	1000	SINGLE ARM	NOT APPLICABLE	RIGID COLUMN	URBIS	AXIA 2 S1	VALMONT ST	SHEET STEEL	8	GALVANISED	THAMES
46100151	BOTTESFORD LANE	Bottesford Parish	489730.64	407673.81	7	7006	00184580	03/08/2018 00:00	3	1	LESS THAN 30MPH	BACK OF FOOTPATH	1000	SINGLE ARM	NOT APPLICABLE	RIGID COLUMN	URBIS	AXIA 2 S1	MALLATITE	TUBULAR STEEL	8	GALVANISED	TUBULAR
46100151	BOTTESFORD LANE	Bottesford Parish	489730.83	407637.55	8	7007	00184581	03/08/2018 00:00	3	1	LESS THAN 30MPH	BACK OF FOOTPATH	1000	SINGLE ARM	NOT APPLICABLE	RIGID COLUMN	URBIS	AXIA 2 S1	MALLATITE	TUBULAR STEEL	8	GALVANISED	TUBULAR
46100151	BOTTESFORD LANE	Bottesford Parish	489731.3	407609	9	7008	00184582	03/08/2018 00:00	3	1	LESS THAN 30MPH	VERGE	1000	SINGLE ARM	NOT APPLICABLE	RIGID COLUMN	URBIS	AXIA 2 S1	MALLATITE	TUBULAR STEEL	8	GALVANISED	TUBULAR
46100152	BOTTESFORD ROAD	Scunthorpe	489698.46	408627	1	7000	00184593	01/04/2005 00:00	1	3	LESS THAN 30MPH	BACK OF FOOTPATH	500	SINGLE ARM	NOT APPLICABLE	RIGID COLUMN	PHILIPS	IST MED 80 LED 13 KLM	MALLATITE	SHEET STEEL	8	GALVANISED	THAMES
46100152	BOTTESFORD ROAD	Scunthorpe	489729.7	408381.8	10	7009	00184602	01/04/2005 00:00	1	3	LESS THAN 30MPH	BACK OF FOOTPATH	500	SINGLE ARM	NOT APPLICABLE	RIGID COLUMN	URBIS	AXIA 2 S1	MALLATITE	SHEET STEEL	8	GALVANISED	THAMES
46100152	BOTTESFORD ROAD	Scunthorpe	489717.19	408351.74	11	7010	00184603	01/04/2005 00:00	1	3	LESS THAN 30MPH	BACK OF FOOTPATH	500	SINGLE ARM	NOT APPLICABLE	RIGID COLUMN	URBIS	AXIA 2 S1	MALLATITE	SHEET STEEL	8	GALVANISED	THAMES
46100152	BOTTESFORD ROAD	Scunthorpe	489733.57	408330.6	12	7011	00184604	01/04/2005 00:00	1	3	LESS THAN 30MPH	BACK OF FOOTPATH	500	SINGLE ARM	NOT APPLICABLE	RIGID COLUMN	URBIS	AXIA 2 S1	MALLATITE	SHEET STEEL	8	GALVANISED	THAMES
46100152	BOTTESFORD ROAD	Scunthorpe	489726.46	408284.31	13	7012	00184605	01/04/2012 00:00	1	3	LESS THAN 30MPH	FRONT OF FOOTPATH	1000	SINGLE ARM	NOT APPLICABLE	RIGID COLUMN	URBIS	AXIA 2 S1	VALMONT ST	SHEET STEEL	8	GALVANISED	THAMES
46100152	BOTTESFORD ROAD	Scunthorpe	489736.79	408256.74	14	7013	00184606	13/04/2021 00:00	1	3	LESS THAN 30MPH	BACK OF FOOTPATH	500	SINGLE ARM	NOT APPLICABLE	RIGID COLUMN	URBIS	AXIA 2 S1	MALLATITE	TUBULAR STEEL	8	GALVANISED	TUBULAR
46100152	BOTTESFORD ROAD	Scunthorpe	489731.26	408225.44	15	7014	00184607	13/04/2021 00:00	1	3	LESS THAN 30MPH	BACK OF FOOTPATH	500	SINGLE ARM	NOT APPLICABLE	RIGID COLUMN	URBIS	AXIA 2 S1	MALLATITE	TUBULAR STEEL	8	GALVANISED	TUBULAR
46100152	BOTTESFORD ROAD	Scunthorpe	489733.14	408196.51	16FP	7015	00184608	13/04/2021 00:00	1	3	LESS THAN 30MPH	BACK OF FOOTPATH	500	SINGLE ARM	NOT APPLICABLE	RIGID COLUMN	URBIS	AXIA 2 S1	MALLATITE	TUBULAR STEEL	8	GALVANISED	TUBULAR
46100152	BOTTESFORD ROAD	Scunthorpe	489742.91	408172.83	17	7016	00184609	13/04/2021 00:00	1	3	LESS THAN 30MPH	VERGE	500	SINGLE ARM	NOT APPLICABLE	RIGID COLUMN	URBIS	AXIA 2 S1	MALLATITE	TUBULAR STEEL	8	GALVANISED	TUBULAR
46100152	BOTTESFORD ROAD	Scunthorpe	489737.64	408140.63	18	7017	00184610	01/04/2012 00:00	1	3	LESS THAN 30MPH	VERGE	1000	SINGLE ARM	NOT APPLICABLE	RIGID COLUMN	URBIS	AXIA 2 S1	VALMONT ST	SHEET STEEL	8	GALVANISED	THAMES
46100152	BOTTESFORD ROAD	Scunthorpe	489747.51	408113.8	19	7018	00184611	01/04/2012 00:00	1	3	LESS THAN 30MPH	VERGE	1000	SINGLE ARM	NOT APPLICABLE	RIGID COLUMN	URBIS	AXIA 2 S1	VALMONT ST	SHEET STEEL	8	GALVANISED	THAMES
46100152	BOTTESFORD ROAD	Scunthorpe	489680.18	408594.14	2	7001	00184594	01/04/2005 00:00	1	3	LESS THAN 30MPH	BACK OF FOOTPATH	500	SINGLE ARM	NOT APPLICABLE	RIGID COLUMN	URBIS	AXIA 2 S1	MALLATITE	SHEET STEEL	8	GALVANISED	THAMES
46100152	BOTTESFORD ROAD	Scunthorpe	489742.41	408071.48	20	7019	00184612	01/04/2012 00:00	1	3	LESS THAN 30MPH	VERGE	1000	SINGLE ARM	NOT APPLICABLE	RIGID COLUMN	URBIS	AXIA 2 S1	VALMONT ST	SHEET STEEL	8	GALVANISED	THAMES
46100152	BOTTESFORD ROAD	Scunthorpe	489753.31	408041.8	21FP	7020	00184613	01/04/2012 00:00	1	3	LESS THAN 30MPH	VERGE	1000	SINGLE ARM	NOT APPLICABLE	RIGID COLUMN	URBIS	AXIA 2 S1	VALMONT ST	SHEET STEEL	8	GALVANISED	THAMES
46100152	BOTTESFORD ROAD	Scunthorpe	489752.42	407999.09	22	7021	00184614	13/04/2021 00:00	1	3	LESS THAN 30MPH	VERGE	500	SINGLE ARM	NOT APPLICABLE	RIGID COLUMN	URBIS	AXIA 2 S1	MALLATITE	TUBULAR STEEL	8	GALVANISED	TUBULAR
46100152	BOTTESFORD ROAD	Scunthorpe	489768.62	407964.51	23	7022	00184615	01/04/1984 00:00	1	3	LESS THAN 30MPH	VERGE	1250	SINGLE ARM	NOT APPLICABLE	RIGID COLUMN	URBIS	AXIA 2 S1	PETITJEAN	SHEET STEEL	8	GALVANISED	THAMES
46100152	BOTTESFORD ROAD	Scunthorpe	489761.78	407890.42	24	7023	00184616	02/12/2022 00:00	1	3	LESS THAN 30MPH	VERGE	1000	SINGLE ARM	NOT APPLICABLE	RIGID COLUMN	URBIS	AXIA 2 S1	MALLATITE	TUBULAR STEEL	8	GALVANISED	TUBULAR
46100152	BOTTESFORD ROAD	Scunthorpe	489682.93	408574.67	3	7002	00184595	01/04/2005 00:00	1	3	LESS THAN 30MPH	BACK OF FOOTPATH	500	SINGLE ARM	NOT APPLICABLE	RIGID COLUMN	URBIS	AXIA 2 S1	MALLATITE	SHEET STEEL	8	GALVANISED	THAMES
46100152	BOTTESFORD ROAD	Scunthorpe	489693.25	408545.18	4	7003	00184596	01/04/2008 00:00	1	3	LESS THAN 30MPH	BACK OF FOOTPATH	500	SINGLE ARM	NOT APPLICABLE	RIGID COLUMN	URBIS	AXIA 2 S1	MALLATITE	SHEET STEEL	8	GALVANISED	THAMES
46100152	BOTTESFORD ROAD	Scunthorpe	489712.01	408529.54	5	7004	00184597	01/04/2005 00:00	1	3	LESS THAN 30MPH	BACK OF FOOTPATH	500	SINGLE ARM	NOT APPLICABLE	RIGID COLUMN	URBIS	AXIA 2 S1	MALLATITE	SHEET STEEL	8	GALVANISED	THAMES
46100152	BOTTESFORD ROAD	Scunthorpe	489720.13	408502.24	6	7005	00184598	01/04/2005 00:00	1	3	LESS THAN 30MPH	BACK OF FOOTPATH	500	SINGLE ARM	NOT APPLICABLE	RIGID COLUMN	URBIS	AXIA 2 S1	MALLATITE	SHEET STEEL	8	GALVANISED	THAMES
46100152	BOTTESFORD ROAD	Scunthorpe	489706.27	408476.2	7	7006	00184599	01/04/2005 00:00	1	3	LESS THAN 30MPH	BACK OF FOOTPATH	500	SINGLE ARM	NOT APPLICABLE	RIGID COLUMN	URBIS	AXIA 2 S1	MALLATITE	SHEET STEEL	8	GALVANISED	THAMES
46100152	BOTTESFORD ROAD	Scunthorpe	489723.07	408446.8	8	7007	00184600	01/04/2005 00:00	1	3	LESS THAN 30MPH	BACK OF FOOTPATH	500	SINGLE ARM	NOT APPLICABLE	RIGID COLUMN	URBIS	AXIA 2 S1	MALLATITE	SHEET STEEL	8	GALVANISED	THAMES
46100152	BOTTESFORD ROAD	Scunthorpe	489715.37	408414.32	9	7008	00184601	01/04/2005 00:00	1	3	LESS THAN 30MPH	BACK OF FOOTPATH	500	SINGLE ARM	NOT APPLICABLE	RIGID COLUMN	URBIS	AXIA 2 S1	MALLATITE	SHEET STEEL	8	GALVANISED	THAMES
46100153	BOUGHTON AVENUE	Scunthorpe	488646.13	411622.99	1	7000	00184617	01/04/2001 00:00	6	3	LESS THAN 30MPH	BACK OF FOOTPATH	0	POST TOP	NOT APPLICABLE	RIGID COLUMN	URBIS	AXIA 2 S1	MALLATITE	TUBULAR STEEL	6	GALVANISED	STEPPED TUBULAR
46100153	BOUGHTON AVENUE	Scunthorpe	488617.82	411627.12	2	7001	00184618	01/04/2001 00:00	6	3	LESS THAN 30MPH	BACK OF FOOTPATH	0	POST TOP	NOT APPLICABLE	RIGID COLUMN	URBIS	AXIA 2 S1	MALLATITE	TUBULAR STEEL	6	GALVANISED	STEPPED TUBULAR
46100153	BOUGHTON AVENUE	Scunthorpe	488592.82	411612.51	3	7002	00184619	01/04/2001 00:00	6	3	LESS THAN 30MPH	BACK OF FOOTPATH	0	POST TOP	NOT APPLICABLE	RIGID COLUMN	URBIS	AXIA 2 S1	MALLATITE	TUBULAR STEEL	6	GALVANISED	STEPPED TUBULAR
46100153	BOUGHTON AVENUE	Scunthorpe	488581.03	411632.85	4	7003	00184620	01/04/1993 00:00	6	3	NOT ON A ROAD	BACK OF FOOTPATH	0	POST TOP	NOT APPLICABLE	MID HINGED	URBIS	AXIA 2 S1	PETITJEAN	SHEET STEEL	6	GALVANISED	LEVEN
46100153	BOUGHTON AVENUE	Scunthorpe	488564.15	411606.03	5	7004	00184621	01/04/2001 00:00	6	3	LESS THAN 30MPH	BACK OF FOOTPATH	0	POST TOP	NOT APPLICABLE	RIGID COLUMN	URBIS	AXIA 2 S1	MALLATITE	TUBULAR STEEL	6	GALVANISED	STEPPED TUBULAR
46100153	BOUGHTON AVENUE	Scunthorpe	488537.11	411610.26	6	7005	00184622	01/04/2001 00:00	6	3	LESS THAN 30MPH	VERGE	0	POST TOP	NOT APPLICABLE	RIGID COLUMN	URBIS	AXIA 2 S1	MALLATITE	TUBULAR STEEL	6	GALVANISED	STEPPED TUBULAR
46100153	BOUGHTON AVENUE	Scunthorpe	488521.23	411597.94	7	7006	00184623	01/04/2001 00:00	6	3	LESS THAN 30MPH	BACK OF FOOTPATH	0	POST TOP	NOT APPLICABLE	RIGID COLUMN	URBIS	AXIA 2 S1	MALLATITE	TUBULAR STEEL	6	GALVANISED	STEPPED TUBULAR
46100154	BOWLING GREEN LANE	Crowle Parish	477004.39	413156.57	1	7000	00184624	01/04/1993 00:00	5	1	LESS THAN 30MPH	VERGE	300	SINGLE ARM	NOT APPLICABLE	RIGID COLUMN	URBIS	AXIA 2 S1	PETITJEAN	SHEET STEEL	5	GALVANISED	DAER
46100154	BOWLING GREEN LANE	Crowle Parish	477037.43	413165.46	2	7001	00184625	01/04/1993 00:00	5	1	LESS THAN 30MPH	VERGE	300	SINGLE ARM	NOT APPLICABLE	RIGID COLUMN	URBIS	AXIA 2 S1	PETITJEAN	SHEET STEEL	5	GALVANISED	DAER
46100154	BOWLING GREEN LANE	Crowle Parish	477075.62	413171.72	3	7002	00184626	01/04/1993 00:00	5	1	LESS THAN 30MPH	VERGE	300	SINGLE ARM	NOT APPLICABLE	RIGID COLUMN	URBIS	AXIA 2 S1	PETITJEAN	SHEET STEEL	5	GALVANISED	DAER
46100155	BRACKENHILL ROAD	Haxey Parish	478909.54	399826.67	1	7000	00184627	01/04/1995 00:00	6	2	LESS THAN 30MPH	VERGE	0	POST TOP	NOT APPLICABLE	RIGID COLUMN	URBIS	AXIA 2 S1	PETITJEAN	SHEET STEEL	5	GALVANISED	NIDD
46100155	BRACKENHILL ROAD	Haxey Parish	478695.1	399780.79	10	7009	00184636	01/04/2000 00:00	6	2	LESS THAN 30MPH	ON POLE	800	SINGLE ARM	NOT APPLICABLE	POLE MOUNTED	URBIS	AXIA 2 S1	WOODEN PO	WOOD	5	NOT APPLICABI	Not Applicable
46100155	BRACKENHILL ROAD	Haxey Parish	478667.42	399790.2	11	7010	00184637	19/09/2018 00:00	6	2	LESS THAN 30MPH	BACK OF FOOTPATH	0	POST TOP	NOT APPLICABLE	RIGID COLUMN	URBIS	AXIA 2 S1	VALMONT ST	TUBULAR STEEL	6	GALVANISED	TUBULAR
46100155	BRACKENHILL ROAD	Haxey Parish	478643.57	399787.75	12	7011	00184638	01/04/2000 00:00	6	2	LESS THAN 30MPH	ON POLE	800	SINGLE ARM	NOT APPLICABLE	POLE MOUNTED	URBIS	AXIA 2 S1	WOODEN PO	WOOD	5	NOT APPLICABI	Not Applicable
46100155	BRACKENHILL ROAD	Haxey Parish	478600.9	399781.51	13	7012	00184639	01/04/2000 00:00	6	2	LESS THAN 30MPH	ON POLE	800	SINGLE ARM	NOT APPLICABLE	POLE MOUNTED	URBIS	AXIA 2 S1	WOODEN PO	WOOD	5	NOT APPLICABI	Not Applicable
46100155	BRACKENHILL ROAD	Haxey Parish	478559.69	399776.25	14	7013	00184640	01/04/2000 00:00	6	2	LESS THAN 30MPH	ON POLE	800	SINGLE ARM	NOT APPLICABLE	POLE MOUNTED	URBIS	AXIA 2 S1	WOODEN PO	WOOD	5	NOT APPLICABI	Not Applicable
46100155	BRACKENHILL ROAD	Haxey Parish	478506.26	399770.97	15	7014	00184641	01/04/2000 00:00	6	2	LESS THAN 30MPH	ON POLE	800	SINGLE ARM	NOT APPLICABLE	POLE MOUNTED	URBIS	AXIA 2 S1	WOODEN PO	WOOD	5	NOT APPLICABI	Not Applicable
46100155	BRACKENHILL ROAD	Haxey Parish	478463.92	399770.64	16	7015	00184642	01/04/2000 00:00	6	2	LESS THAN 30MPH	ON POLE	800	SINGLE ARM	NOT APPLICABLE	POLE MOUNTED	URBIS	AXIA 2 S1	WOODEN PO	WOOD	5	NOT APPLICABI	Not Applicable
46100155	BRACKENHILL ROAD	Haxey Parish	478415.78	399770.23	17	7016	00184643	01/04/2000 00:00	6	2	LESS THAN 30MPH	ON POLE	800	SINGLE ARM	NOT APPLICABLE	POLE MOUNTED	URBIS	AXIA 2 S1	WOODEN PO	WOOD	5	NOT APPLICABI	Not Applicable
46100155	BRACKENHILL ROAD	Haxey Parish	478368.58	399766.67	18	7017	00184644	01/04/2000 00:00	6	2	LESS THAN 30MPH	ON POLE	800	SINGLE ARM	NOT APPLICABLE	POLE MOUNTED	URBIS	AXIA 2 S1	WOODEN PO	WOOD	5	NOT APPLICABI	Not Applicable
46100155	BRACKENHILL ROAD	Haxey Parish	478918.45	399794.21	2	7001	00184628	01/04/1995 00:00	6	2	LESS THAN 30MPH	VERGE	0	POST TOP	NOT APPLICABLE	RIGID COLUMN	URBIS	AXIA 2 S1	PETITJEAN	SHEET STEEL	5	GALVANISED	NIDD
46100155	BRACKENHILL ROAD	Haxey Parish	478924.28	399767.82	3	7002	00184629	01/04/2001 00:00	6	2	LESS THAN 30MPH	VERGE	0	POST TOP	NOT APPLICABLE	RIGID COLUMN	URBIS	AXIA 2 S1	MALLATITE	TUBULAR STEEL	5	GALVANISED	STEPPED TUBULAR
46100155	BRACKENHILL ROAD	Haxey Parish	478910.18	399738.19	4	7003	00184630	21/09/2020 00:00	6	2	LESS THAN 30MPH	BACK OF FOOTPATH	0	POST TOP	NOT APPLICABLE	RIGID COLUMN	URBIS	AXIA 2 S1	MALLATITE	TUBULAR STEEL	6	GALVANISED	TUBULAR
46100155	BRACKENHILL ROAD	Haxey Parish	478892.97	399741.45	5

46100179	BRIGG ROAD	Wrawby Parish	501284.33	408175.49	28	7027	00184806	01/04/1994 00:00	6	4	GREATER THAN 50MPH	VERGE	1500	SINGLE ARM	NOT APPLICABLE	RIGID COLUMN	URBIS	AXIA 2 S1	PETITJEAN	SHEET STEEL	10	GALVANISED	THAMES
46100179	BRIGG ROAD	Wrawby Parish	501263.84	408152.46	29FP	7028	00184807	01/04/1994 00:00	6	4	GREATER THAN 50MPH	VERGE	1500	SINGLE ARM	NOT APPLICABLE	RIGID COLUMN	URBIS	AXIA 2 S1	PETITJEAN	SHEET STEEL	10	GALVANISED	THAMES
46100179	BRIGG ROAD	Wrawby Parish	501960.24	408567.2	3	7002	00184781	01/04/1994 00:00	6	4	LESS THAN 30MPH	BACK OF FOOTPATH	2000	SINGLE ARM	NOT APPLICABLE	RIGID COLUMN	URBIS	AXIA 2 S1	PETITJEAN	SHEET STEEL	10	GALVANISED	THAMES
46100179	BRIGG ROAD	Wrawby Parish	501242.7	408130.49	30	7029	00184808	01/04/1994 00:00	6	4	GREATER THAN 50MPH	VERGE	1500	SINGLE ARM	NOT APPLICABLE	RIGID COLUMN	URBIS	AXIA 2 S1	PETITJEAN	SHEET STEEL	10	GALVANISED	THAMES
46100179	BRIGG ROAD	Wrawby Parish	501200.84	408099.82	31	7030	00184809	01/04/1994 00:00	6	4	GREATER THAN 50MPH	VERGE	1500	SINGLE ARM	NOT APPLICABLE	RIGID COLUMN	URBIS	AXIA 2 S1	PETITJEAN	SHEET STEEL	10	GALVANISED	THAMES
46100179	BRIGG ROAD	Wrawby Parish	501930.48	408551.48	4	7003	00184782	29/10/2024 00:00	6	4	LESS THAN 30MPH	BACK OF FOOTPATH	0	SINGLE ARM	NOT APPLICABLE	RIGID COLUMN	URBIS	AXIA 2 S1	MALLATITE	TUBULAR STEEL	10	GALVANISED	TUBULAR
46100179	BRIGG ROAD	Wrawby Parish	501904.71	408541.39	5	7004	00184783	01/04/1994 00:00	6	4	LESS THAN 30MPH	BACK OF FOOTPATH	1500	SINGLE ARM	NOT APPLICABLE	RIGID COLUMN	URBIS	AXIA 2 S1	PETITJEAN	SHEET STEEL	10	GALVANISED	THAMES
46100179	BRIGG ROAD	Wrawby Parish	501875.83	408530.07	6	7005	00184784	01/04/1994 00:00	6	4	LESS THAN 30MPH	BACK OF FOOTPATH	1500	SINGLE ARM	NOT APPLICABLE	RIGID COLUMN	URBIS	AXIA 2 S1	PETITJEAN	SHEET STEEL	10	GALVANISED	THAMES
46100179	BRIGG ROAD	Wrawby Parish	501846.23	408519.82	7	7006	00184785	01/04/1994 00:00	6	4	LESS THAN 30MPH	BACK OF FOOTPATH	1500	SINGLE ARM	NOT APPLICABLE	RIGID COLUMN	URBIS	AXIA 2 S1	PETITJEAN	SHEET STEEL	10	GALVANISED	THAMES
46100179	BRIGG ROAD	Wrawby Parish	501810.76	408508.89	8	7007	00184786	01/04/1994 00:00	6	4	LESS THAN 30MPH	BACK OF FOOTPATH	1500	SINGLE ARM	NOT APPLICABLE	RIGID COLUMN	URBIS	AXIA 2 S1	PETITJEAN	SHEET STEEL	10	GALVANISED	THAMES
46100179	BRIGG ROAD	Wrawby Parish	501780.61	408499.48	9	7008	00184787	01/04/1994 00:00	6	4	LESS THAN 30MPH	BACK OF FOOTPATH	1500	SINGLE ARM	NOT APPLICABLE	RIGID COLUMN	URBIS	AXIA 2 S1	PETITJEAN	SHEET STEEL	10	GALVANISED	THAMES
46100180	BRIGGATE DRIVE	Messingham Parish	489612.39	404458.17	1	7000	00184810	01/04/2004 00:00	4	1	LESS THAN 30MPH	BACK OF FOOTPATH	0	POST TOP	NOT APPLICABLE	RIGID COLUMN	URBIS	AXIA 2 S1	MALLATITE	TUBULAR STEEL	6	GALVANISED	STEPPED TUBULAR
46100180	BRIGGATE DRIVE	Messingham Parish	489581.53	404463.16	2	7001	00184811	01/04/2004 00:00	4	1	LESS THAN 30MPH	BACK OF FOOTPATH	0	POST TOP	NOT APPLICABLE	RIGID COLUMN	URBIS	AXIA 2 S1	MALLATITE	TUBULAR STEEL	6	GALVANISED	STEPPED TUBULAR
46100180	BRIGGATE DRIVE	Messingham Parish	489555.5	404460.54	3	7002	00184812	01/04/2004 00:00	4	1	LESS THAN 30MPH	BACK OF FOOTPATH	0	POST TOP	NOT APPLICABLE	RIGID COLUMN	URBIS	AXIA 2 S1	MALLATITE	TUBULAR STEEL	6	GALVANISED	STEPPED TUBULAR
46100180	BRIGGATE DRIVE	Messingham Parish	489521.37	404458.66	4	7003	00184813	01/04/2004 00:00	4	1	LESS THAN 30MPH	BACK OF FOOTPATH	0	POST TOP	NOT APPLICABLE	RIGID COLUMN	URBIS	AXIA 2 S1	MALLATITE	TUBULAR STEEL	6	GALVANISED	STEPPED TUBULAR
46100180	BRIGGATE DRIVE	Messingham Parish	489497.51	404456.78	5	7004	00184814	01/04/2004 00:00	4	1	LESS THAN 30MPH	BACK OF FOOTPATH	0	POST TOP	NOT APPLICABLE	RIGID COLUMN	URBIS	AXIA 2 S1	MALLATITE	TUBULAR STEEL	6	GALVANISED	STEPPED TUBULAR
46100180	BRIGGATE DRIVE	Messingham Parish	489465.09	404455.71	6	7005	00184815	01/04/2004 00:00	4	1	LESS THAN 30MPH	BACK OF FOOTPATH	0	POST TOP	NOT APPLICABLE	RIGID COLUMN	URBIS	AXIA 2 S1	MALLATITE	TUBULAR STEEL	6	GALVANISED	STEPPED TUBULAR
46100180	BRIGGATE DRIVE	Messingham Parish	489451.2	404465.26	7	7006	00184816	01/04/2004 00:00	4	1	LESS THAN 30MPH	VERGE	0	POST TOP	NOT APPLICABLE	RIGID COLUMN	URBIS	AXIA 2 S1	MALLATITE	TUBULAR STEEL	6	GALVANISED	STEPPED TUBULAR
46100180	BRIGGATE DRIVE	Messingham Parish	489442.06	404458	8	7007	00184817	01/04/2004 00:00	4	1	LESS THAN 30MPH	VERGE	0	POST TOP	NOT APPLICABLE	RIGID COLUMN	URBIS	AXIA 2 S1	MALLATITE	TUBULAR STEEL	6	GALVANISED	STEPPED TUBULAR
46100181	BRISTOL ROAD	Scunthorpe	487325.95	409461.28	1	7000	00184818	01/04/2013 00:00	5	2	LESS THAN 30MPH	BACK OF FOOTPATH	0	POST TOP	NOT APPLICABLE	RIGID COLUMN	URBIS	AXIA 2 S1	MALLATITE	TUBULAR STEEL	6	GALVANISED	TUBULAR
46100181	BRISTOL ROAD	Scunthorpe	487297.95	409726.52	10	7009	00184827	01/04/2005 00:00	5	2	LESS THAN 30MPH	VERGE	0	POST TOP	NOT APPLICABLE	RIGID COLUMN	URBIS	AXIA 2 S1	MALLATITE	TUBULAR STEEL	6	GALVANISED	TUBULAR
46100181	BRISTOL ROAD	Scunthorpe	487295.29	409757.8	11	7010	00184828	01/04/2013 00:00	5	2	LESS THAN 30MPH	BACK OF FOOTPATH	0	POST TOP	NOT APPLICABLE	RIGID COLUMN	URBIS	AXIA 2 S1	MALLATITE	TUBULAR STEEL	6	GALVANISED	TUBULAR
46100181	BRISTOL ROAD	Scunthorpe	487283.73	409775.38	12	7011	00184829	01/04/1980 00:00	5	2	LESS THAN 30MPH	VERGE	800	SINGLE ARM	NOT APPLICABLE	RIGID COLUMN	URBIS	AXIA 2 S1	PETITJEAN	SHEET STEEL	5	GALVANISED	DAER
46100181	BRISTOL ROAD	Scunthorpe	487282	409794.1	13	7012	00184830	01/04/2013 00:00	5	2	LESS THAN 30MPH	BACK OF FOOTPATH	0	POST TOP	NOT APPLICABLE	RIGID COLUMN	URBIS	AXIA 2 S1	MALLATITE	TUBULAR STEEL	6	GALVANISED	TUBULAR
46100181	BRISTOL ROAD	Scunthorpe	487279.3	409831.2	14	7013	00184831	01/04/1980 00:00	5	2	LESS THAN 30MPH	VERGE	300	SINGLE ARM	NOT APPLICABLE	RIGID COLUMN	URBIS	AXIA 2 S1	PETITJEAN	SHEET STEEL	5	GALVANISED	DAER
46100181	BRISTOL ROAD	Scunthorpe	487276.22	409858.65	15	7014	00184832	01/04/1980 00:00	5	2	LESS THAN 30MPH	VERGE	300	SINGLE ARM	NOT APPLICABLE	RIGID COLUMN	URBIS	AXIA 2 S1	PETITJEAN	SHEET STEEL	5	GALVANISED	DAER
46100181	BRISTOL ROAD	Scunthorpe	487282.04	409883.35	16	7015	00184833	01/04/1980 00:00	5	2	LESS THAN 30MPH	FRONT OF FOOTPATH	300	SINGLE ARM	NOT APPLICABLE	RIGID COLUMN	URBIS	AXIA 2 S1	PETITJEAN	SHEET STEEL	5	GALVANISED	DAER
46100181	BRISTOL ROAD	Scunthorpe	487280.61	409916.95	17	7016	00184834	01/04/2006 00:00	5	2	LESS THAN 30MPH	BACK OF FOOTPATH	0	POST TOP	NOT APPLICABLE	RIGID COLUMN	URBIS	AXIA 2 S1	T AND L	TUBULAR STEEL	5	GALVANISED	STEPPED TUBULAR
46100181	BRISTOL ROAD	Scunthorpe	487268.29	409941.85	18	7017	00184835	01/04/2013 00:00	5	2	LESS THAN 30MPH	VERGE	0	POST TOP	NOT APPLICABLE	RIGID COLUMN	URBIS	AXIA 2 S1	MALLATITE	TUBULAR STEEL	6	NOT APPLICABI	TUBULAR
46100181	BRISTOL ROAD	Scunthorpe	487274.46	409970.44	19	7018	00184836	01/04/2013 00:00	5	2	LESS THAN 30MPH	BACK OF FOOTPATH	0	POST TOP	NOT APPLICABLE	RIGID COLUMN	URBIS	AXIA 2 S1	MALLATITE	TUBULAR STEEL	6	GALVANISED	TUBULAR
46100181	BRISTOL ROAD	Scunthorpe	487319.58	409502.11	2	7001	00184819	01/04/2005 00:00	5	2	LESS THAN 30MPH	BACK OF FOOTPATH	0	POST TOP	NOT APPLICABLE	RIGID COLUMN	URBIS	AXIA 2 S1	MALLATITE	TUBULAR STEEL	6	GALVANISED	TUBULAR
46100181	BRISTOL ROAD	Scunthorpe	487272.33	410006.04	20	7019	00184837	01/04/1980 00:00	5	2	LESS THAN 30MPH	BACK OF FOOTPATH	300	SINGLE ARM	NOT APPLICABLE	RIGID COLUMN	URBIS	AXIA 2 S1	PETITJEAN	SHEET STEEL	5	GALVANISED	DAER
46100181	BRISTOL ROAD	Scunthorpe	487259.84	410023.61	21	7020	00184838	01/04/1980 00:00	5	2	LESS THAN 30MPH	VERGE	300	SINGLE ARM	NOT APPLICABLE	RIGID COLUMN	URBIS	AXIA 2 S1	PETITJEAN	SHEET STEEL	5	GALVANISED	DAER
46100181	BRISTOL ROAD	Scunthorpe	487257.23	410052.87	22	7021	00184839	01/04/2005 00:00	5	2	LESS THAN 30MPH	VERGE	0	POST TOP	NOT APPLICABLE	RIGID COLUMN	URBIS	AXIA 2 S1	MALLATITE	TUBULAR STEEL	6	GALVANISED	TUBULAR
46100181	BRISTOL ROAD	Scunthorpe	487263.63	410083.25	23	7022	00184840	01/04/2005 00:00	5	2	LESS THAN 30MPH	BACK OF FOOTPATH	0	POST TOP	NOT APPLICABLE	RIGID COLUMN	URBIS	AXIA 2 S1	MALLATITE	TUBULAR STEEL	6	GALVANISED	TUBULAR
46100181	BRISTOL ROAD	Scunthorpe	487249.51	410100.25	24	7023	00184841	01/04/1985 00:00	5	2	LESS THAN 30MPH	VERGE	1000	SINGLE ARM	NOT APPLICABLE	RIGID COLUMN	URBIS	AXIA 2 S1	PETITJEAN	SHEET STEEL	8	GALVANISED	THAMES
46100181	BRISTOL ROAD	Scunthorpe	487259.16	410124.88	25	7024	00184842	01/04/2005 00:00	5	2	LESS THAN 30MPH	BACK OF FOOTPATH	0	POST TOP	NOT APPLICABLE	RIGID COLUMN	URBIS	AXIA 2 S1	MALLATITE	TUBULAR STEEL	5	GALVANISED	TUBULAR
46100181	BRISTOL ROAD	Scunthorpe	487252.5	410150.66	26	7025	00184843	01/04/1980 00:00	5	2	LESS THAN 30MPH	BACK OF FOOTPATH	300	SINGLE ARM	NOT APPLICABLE	RIGID COLUMN	URBIS	AXIA 2 S1	PETITJEAN	SHEET STEEL	5	GALVANISED	DAER
46100181	BRISTOL ROAD	Scunthorpe	487307.11	409525.34	3	7002	00184820	01/04/2005 00:00	5	2	LESS THAN 30MPH	VERGE	0	POST TOP	NOT APPLICABLE	RIGID COLUMN	URBIS	AXIA 2 S1	MALLATITE	TUBULAR STEEL	6	GALVANISED	TUBULAR
46100181	BRISTOL ROAD	Scunthorpe	487304.6	409556.42	4	7003	00184821	01/04/2005 00:00	5	2	LESS THAN 30MPH	VERGE	0	POST TOP	NOT APPLICABLE	RIGID COLUMN	URBIS	AXIA 2 S1	MALLATITE	TUBULAR STEEL	6	GALVANISED	TUBULAR
46100181	BRISTOL ROAD	Scunthorpe	487311.4	409582.16	5	7004	00184822	01/04/2005 00:00	5	2	LESS THAN 30MPH	FRONT OF FOOTPATH	0	POST TOP	NOT APPLICABLE	RIGID COLUMN	URBIS	AXIA 2 S1	MALLATITE	TUBULAR STEEL	6	GALVANISED	TUBULAR
46100181	BRISTOL ROAD	Scunthorpe	487299.3	409608.75	6	7005	00184823	01/04/1980 00:00	5	2	LESS THAN 30MPH	VERGE	300	SINGLE ARM	NOT APPLICABLE	RIGID COLUMN	URBIS	AXIA 2 S1	PETITJEAN	SHEET STEEL	5	GALVANISED	DAER
46100181	BRISTOL ROAD	Scunthorpe	487305.14	409636.79	7	7006	00184824	01/04/2005 00:00	5	2	LESS THAN 30MPH	BACK OF FOOTPATH	0	POST TOP	NOT APPLICABLE	RIGID COLUMN	URBIS	AXIA 2 S1	MALLATITE	TUBULAR STEEL	6	GALVANISED	TUBULAR
46100181	BRISTOL ROAD	Scunthorpe	487304.94	409664.81	8	7007	00184825	01/04/2005 00:00	5	2	LESS THAN 30MPH	BACK OF FOOTPATH	0	POST TOP	NOT APPLICABLE	RIGID COLUMN	URBIS	AXIA 2 S1	MALLATITE	TUBULAR STEEL	6	GALVANISED	TUBULAR
46100181	BRISTOL ROAD	Scunthorpe	487291.54	409692.05	9	7008	00184826	01/04/2005 00:00	5	2	LESS THAN 30MPH	VERGE	0	POST TOP	NOT APPLICABLE	RIGID COLUMN	URBIS	AXIA 2 S1	MALLATITE	TUBULAR STEEL	6	GALVANISED	TUBULAR
46100182	BROCKLESBY ROAD	Ulceby Parish	510959.88	414582.77	1	7000	00184844	01/04/1973 00:00	3	1	LESS THAN 30MPH	ON POLE	800	SINGLE ARM	NOT APPLICABLE	POLE MOUNTED	URBIS	AXIA 2 S1	WOODEN PO	WOOD	5	NOT APPLICABI	Not Applicable
46100182	BROCKLESBY ROAD	Ulceby Parish	510975.17	414527.34	2	7001	00184845	01/04/1973 00:00	3	1	LESS THAN 30MPH	ON POLE	1000	SINGLE ARM	NOT APPLICABLE	POLE MOUNTED	URBIS	AXIA 2 S1	WOODEN PO	WOOD	5	NOT APPLICABI	Not Applicable
46100182	BROCKLESBY ROAD	Ulceby Parish	510990.74	414475.74	3	7002	00184846	01/04/1973 00:00	3	1	GREATER THAN 50MPH	ON POLE	1000	SINGLE ARM	NOT APPLICABLE	POLE MOUNTED	URBIS	AXIA 2 S1	WOODEN PO	WOOD	5	NOT APPLICABI	Not Applicable
46100182	BROCKLESBY ROAD	Ulceby Parish	511005.37	414423.76	4	7003	00184847	01/04/1973 00:00	3	1	GREATER THAN 50MPH	ON POLE	1000	SINGLE ARM	NOT APPLICABLE	POLE MOUNTED	URBIS	AXIA 2 S1	WOODEN PO	WOOD	5	NOT APPLICABI	Not Applicable
46100182	BROCKLESBY ROAD	Ulceby Parish	511017.68	414384.72	5	7004	00184848	01/04/1988 00:00	3	1	GREATER THAN 50MPH	ON POLE	1000	SINGLE ARM	NOT APPLICABLE	POLE MOUNTED	URBIS	AXIA 2 S1	WOODEN PO	WOOD	5	NOT APPLICABI	Not Applicable
46100182	BROCKLESBY ROAD	Ulceby Parish	511026.67	414353.28	6	7005	00184849	01/04/1973 00:00	3	1	GREATER THAN 50MPH	ON POLE	1000	SINGLE ARM	NOT APPLICABLE	POLE MOUNTED	URBIS	AXIA 2 S1	WOODEN PO	WOOD	5	NOT APPLICABI	Not Applicable
46100183	BROOKDALE ROAD	Scunthorpe	487526.97	408462.28	1	7000	00184850	01/04/2006 00:00	5	2	LESS THAN 30MPH	BACK OF FOOTPATH	0	POST TOP	NOT APPLICABLE	RIGID COLUMN	URBIS	AXIA 2 S1	MALLATITE	TUBULAR STEEL	6	GALVANISED	STEPPED TUBULAR
46100183	BROOKDALE ROAD	Scunthorpe	487528.51	408494.9	2	7001	00184851	01/04/2006 00:00	5	2	LESS THAN 30MPH	BACK OF FOOTPATH	0	POST TOP	NOT APPLICABLE	RIGID COLUMN	URBIS	AXIA 2 S1	MALLATITE	TUBULAR STEEL	6	GALVANISED	STEPPED TUBULAR
46100183	BROOKDALE ROAD	Scunthorpe	487518.57	408524.86	3	7002	00184852	01/04/2006 00:00	5	2	LESS THAN 30MPH	BACK OF FOOTPATH	0	POST TOP	NOT APPLICABLE	RIGID COLUMN	URBIS	AXIA 2 S1	MALLATITE	TUBULAR STEEL	6	GALVANISED	STEPPED TUBULAR
46100183	BROOKDALE ROAD	Scunthorpe	487520.95	408556.78	4	7003	00184853	01/04/2006 00:00	5	2	LESS THAN 30MPH	BACK OF FOOTPATH	0	POST TOP	NOT APPLICABLE	RIGID COLUMN	URBIS	AXIA 2 S1	MALLATITE	TUBULAR STEEL	6	GALVANISED	STEPPED TUBULAR
46100183	BROOKDALE ROAD	Scunthorpe	487519.41	408581.28	5	7004	00184854	01/04/2006 00:00	5	2	LESS THAN 30MPH	BACK OF FOOTPATH	0	POST TOP	NOT APPLICABLE	RIGID COLUMN	URBIS	AXIA 2 S1	MALLATITE	TUBULAR STEEL	6	GALVANISED	STEPPED TUBULAR
46100184	BROOKLANDS AVENUE	Broughton Parish	496138.56	408697.56	1	7011	04200121	01/04/2010 00:00	1	1	BETWEEN 30-50 MPH	BACK OF FOOTPATH	0	POST TOP	NOT APPLICABLE	RIGID COLUMN	URBIS	AXIA 2 S1	MALLATITE	TUBULAR STEEL	6	GALVANISED	TUBULAR
46100184	BROOKLANDS AVENUE	Broughton Parish	495930.07	409012.45	10	7007	00184862	01/04/2005 00:00	1	1	BETWEEN 30-50 MPH	BACK OF FOOTPATH	0	SINGLE ARM	NOT APPLICABLE	RIGID COLUMN	URBIS	AXIA 2 S1	MALLATITE	TUBULAR STEEL	6	GALVANISED	STEPPED TUBULAR
46100184	BROOKLANDS AVENUE	Broughton Parish	495898.92	409056.2	11	7008	00184863	01/04/2005 00:00	1	1	BETWEEN 30-50 MPH	BACK OF FOOTPATH	0	SINGLE ARM	NOT APPLICABLE	RIGID COLUMN	URBIS	AXIA 2 S1	MALLATITE	TUBULAR STEEL	6	GALVANISED	STEPPED TUBULAR
46100184	BROOKLANDS AVENUE	Broughton Parish	495865.67	409103.45	12	7009	00184864	01/04/2005 00:00	1	1	BETWEEN 30-50 MPH	BACK OF FOOTPATH	0	SINGLE ARM	NOT APPLICABLE	RIGID COLUMN	URBIS	AXIA 2 S1	MALLATITE	TUBULAR STEEL	6	GALVANISED	STEPPED TUBULAR
46100184	BROOKLANDS AVENUE	Broughton Parish	495859.02	409132.15	13	7010	00184865	01/04/2005 00:00	1	1	BETWEEN 30-50 MPH	BACK OF FOOTPATH	0	SINGLE ARM	NOT APPLICABLE	RIGID COLUMN	URBIS	AXIA 2 S1	MALLATITE	TUBULAR STEEL	6	GALVANISED	STEPPED TUBULAR
46100184	BROOKLANDS AVENUE	Broughton Parish	496110	408736	2	7012	04200122	01/04/2010 00:00	1	1	BETWEEN 30-50 MPH	BACK OF PATH	0	POST TOP	NOT APPLICABLE	RIGID COLUMN	URBIS	AXIA 2 S1	MALLATITE	TUBULAR STEEL	6	GALVANISED	TUBULAR
46100184	BROOKLANDS AVENUE	Broughton Parish	496098.07	408782.15	3	7000	00184855	01/04/2005 00:00	1	1	BETWEEN 30-50 MPH	BACK OF FOOTPATH	0	SINGLE ARM	NOT APPLICABLE	RIGID COLUMN	URBIS	AXIA 2 S1	MALLATITE	TUBULAR STEEL	6	GALVANISED	STEPPED TUBULAR
46100184	BROOKLANDS AVENUE	Broughton Parish	496073.57	408807.35	4	7001	00184856	01/04/2005 00:00	1	1	BETWEEN 30-50 MPH	BACK OF FOOTPATH	0	SINGLE ARM	NOT APPLICABLE	RIGID COLUMN	URBIS	AXIA 2 S1	MALLATITE	TUBULAR STEEL	6	GALVANISED	STEPPED TUBULAR
46100184	BROOKLANDS AVENUE	Broughton Parish	496056.42	408838.5	5	7002	00184857	01/04/2005 00:00	1	1	BETWEEN 30-50 MPH	BACK OF FOOTPATH	0	SINGLE ARM	NOT APPLICABLE	RIGID COLUMN	URBIS	AXIA 2 S1	MALLATITE	TUBULAR STEEL	6	GALVANISED	STEPPED TUBULAR
46100184	BROOKLANDS AVENUE	Broughton Parish	496031.57	408875.6	6	7003	00184858	01/04/2005 00:00	1	1	BETWEEN 30-50 MPH	BACK OF FOOTPATH	0	SINGLE ARM	NOT APPLICABLE	RIGID COLUMN	URBIS	AXIA 2 S1	MALLATITE	TUBULAR STEEL	6	GALVANISED	STEPPED TUBULAR
46100184	BROOKLANDS AVENUE	Broughton Parish	496009.87	408912.7	7	7004	00184859	01/04/2005 00:00	1	1	BETWEEN 30-50 MPH	BACK OF FOOTPATH	0	SINGLE ARM	NOT APPLICABLE	RIGID COLUMN	URBIS	AXIA 2 S1	MALLATITE	TUBULAR STEEL	6	GALVANISED	STEPPED TUBULAR
46100184	BROOKLANDS AVENUE	Broughton Parish	495973.02	408957.5	8	7005	00184860	01/04/2005 00:00	1	1	BETWEEN 30-50 MPH	BACK OF FOOTPATH	0	SINGLE ARM	NOT APPLICABLE	RIGID COLUMN	URBIS	AXIA 2 S1	MALLATITE	TUBULAR STEEL	6	GALVANISED	STEPPED TUBULAR
46100184	BROOKLANDS AVENUE	Broughton Parish	495957.02	408973.95	9	7006	00184861	01/04/2005 00:00	1	1	BETWEEN 30-50 MPH	BACK OF FOOTPATH	0	SINGLE ARM	NOT APPLICABLE	RIGID COLUMN	URBIS	AXIA 2 S1	MALLATITE	TUBULAR STEEL	6	GALVANISED	STEPPED TUBULAR
46100185	BROOM GROVE	Scunthorpe	489709.87	409693.79	1	7000	00184866	12/03/2020 00:00	2	4	LESS THAN 30MPH	VERGE	0	POST TOP	NOT APPLICABLE	RIGID COLUMN	URBIS	AXIA 2 S1	MALLATITE	TUBULAR STEEL	6	GALVANISED	TUBULAR
46100185	BROOM GROVE	Scunthorpe	489686.01	409661.69	2	7001	00184867	12/03/2020 00:00	2	4	LESS THAN 30MPH	BACK OF FOOTPATH	0	POST TOP	NOT APPLICABLE	RIGID COLUMN	URBIS	AXIA 2 S1	MALLATITE	TUBULAR STEEL	6	GALVANISED	TUBULAR
46100185	BROOM GROVE	Scunthorpe	489657.51	409633.81	3	7002	00184868	01/06/2017 00:00	2	4	LESS THAN 30MPH	FRONT OF FOOTPATH	0	POST TOP	NOT APPLICABLE	RIGID COLUMN	URBIS	AXIA 2 S1	VALMONT ST	TUBULAR STEEL	6	GALVANISED	TUBULAR
46100185	BROOM GROVE	Scunthorpe	489640.87	409609.73	4	7003	00184869	01/04/2013 00:00	2	4	LESS THAN 30MPH	BACK OF FOOTPATH	0	POST TOP	NOT APPLICABLE	RIGID COLUMN	URBIS	AXIA 2 S1	MALLATITE	TUBULAR STEEL	6	GALVANISED	TUBULAR
46100187	BROWNING CLOSE	Scunthorpe	488189.99	408876.06	1	7000	00184870	01/04/1993 00:00	5	2	LESS THAN 30MPH	BACK OF FOOTPATH	300	SINGLE ARM	NOT APPLICABLE	RIGID COLUMN	URBIS	AXIA 2 S1	PETITJEAN	SHEET STEEL	5	GALVANISED	DAER
46100187	BROWNING CLOSE	Scunthorpe	488161.34	408880.82	2	7001	00184871	01/04/1993 00:00	5	2	LESS THAN 30MPH	BACK OF FOOTPATH	300	SINGLE ARM	NOT APPLICABLE	RIGID COLUMN	URBIS	AXIA 2 S1	PETITJEAN	SHEET STEEL	5	GALVANISED	DAER
46100187	BROWNING CLOSE	Scunthorpe	488133.26	408876.51	3	7002	00184872	01/04/1993 00:00	5	2	LESS THAN 30MPH	BACK OF FOOTPATH	300	SINGLE ARM	NOT APPLICABLE	RIGID COLUMN	URBIS	AXIA 2 S1	PETITJEAN	SHEET STEEL	5	GALVANISED	DAER
46100187	BROWNING CLOSE	Scunthorpe	488115.87	408883.85	4	7003	00184873	01/04/1993 00:00	5	2	LESS THAN 30MPH	BACK OF FOOTPATH	300	SINGLE ARM	NOT APPLICABLE	RIGID COLUMN	URBIS	AXIA 2 S1	PETITJEAN	SHEET STEEL	5	GALVANISED	DAER
46100187	BROWNING CLOSE	Scunthorpe	488119.67	408855.05	5	7004	00184874	01/04/1993 00:00	5	2	LESS THAN 30MPH	BACK OF FOOTPATH	300	SINGLE ARM	NOT APPLICABLE	RIGID COLUMN	URBIS	AXIA 2 S1	PETITJEAN	SHEET STEEL	5	GALVANISED	DAER
46100187	BROWNING CLOSE	Scunthorpe	488086.96	408879.72	6	7005	00184875	01/04/1995 00:00	5	2	NOT ON A ROAD	BACK OF FOOTPATH	0	POST TOP	NOT APPLICABLE	MID HINGED	URBIS	AXIA 2 S1	PETITJEAN	SHEET STEEL	5	GALVANISED	LEVEN
46100187	BROWNING CLOSE	Scunthorpe	488091.72	408850	7	7006	00184876	01/04/1995 00:00	5	2	NOT ON A ROAD	BACK OF FOOTPATH	0	POST TOP	NOT APPLICABLE	MID HINGED	URBIS	AXIA 2 S1	PETITJEAN	SHEET STEEL	5	GALVANISED	LEVEN
46100188	BRUCE CLOSE	Broughton Parish	495876.83	408748.25	1	7000	00184877	01/04/2012 00:00	1	1	LESS THAN 30MPH	BACK OF FOOTPATH	0	POST TOP	NOT APPLICABLE	RIGID COLUMN	URBIS	AXIA 2 S1	MALLATITE	TUBULAR STEEL	6	GALVANISED	TUBULAR
46100188	BRUCE CLOSE	Broughton Parish	495857.07	408733.49	2	7001	00184878	01/04/2012 00:00	1	1	LESS THAN 30MPH	BACK OF FOOTPATH	0	POST TOP	NOT APPLICABLE	RIGID COLUMN	URBIS	AXIA 2 S1	MALLATITE	TUBULAR STEEL	6	GALVANISED	TUBULAR
46100188	BRUCE CLOSE	Broughton Parish	495827.8	408722.63	3	7002	00184879	01/04/2012 00:00	1	1	LESS THAN 30MPH	BACK OF FOOTPATH	0	POST TOP	NOT APPLICABLE	RIGID COLUMN	URBIS	AXIA 2 S1	MALLATITE	TUBULAR STEEL	6	GALVANISED	TUBULAR
46100188	BRUCE CLOSE	Broughton Parish	495799.65	408732.08	4	7003	00184880	01/04/2012 00:00	1	1	LESS THAN 30MPH	BACK OF FOOTPATH	0	POST TOP	NOT APPLICABLE	RIGID COLUMN	URBIS	AXIA 2 S1	MALLATITE	TUBULAR STEEL	6	GALVANISED	TUBULAR
46100188	BRUCE CLOSE	Broughton Parish	495795.92	408754.19	5	7004	00184881	01/04/2012 00:00	1	1	LESS THAN 30MPH	BACK OF FOOTPATH	0	POST TOP	NOT APPLICABLE	RIGID COLUMN	URBIS	AXIA 2 S1	MALLATITE	TUBULAR STEEL	6	GALVANISED	TUBULAR
46100189	BRUCE STREET	Scunthorpe	488748.89	411082.63	1	7000	00184882	01/04/2005 00:00	6	3	LESS THAN 30MPH	FRONT OF FOOTPATH	0	POST TOP	NOT APPLICABLE	RI

46100208	BURTON ROAD	Burton upon Stather Parish	489483.52	418028.08	1	7000	00185051	01/04/1988 00:00	2	4	LESS THAN 30MPH	VERGE	800	SINGLE ARM	NOT APPLICABLE	RIGID COLUMN	URBIS	AXIA 2 S1	PETITJEAN	SHEET STEEL	6	GALVANISED	DAER
46100208	BURTON ROAD	Burton upon Stather Parish	489245.13	418063.11	10	7009	00185060	01/04/1988 00:00	2	4	LESS THAN 30MPH	ON POLE	300	SINGLE ARM	NOT APPLICABLE	POLE MOUNTED	URBIS	AXIA 2 S1	WOODEN PO	WOOD	6	NOT APPLICABI	Not Applicable
46100208	BURTON ROAD	Burton upon Stather Parish	489460.84	418030.04	2	7001	00185052	01/04/1988 00:00	2	4	LESS THAN 30MPH	ON POLE	300	SINGLE ARM	NOT APPLICABLE	POLE MOUNTED	URBIS	AXIA 2 S1	WOODEN PO	WOOD	5	NOT APPLICABI	Not Applicable
46100208	BURTON ROAD	Burton upon Stather Parish	489437.32	418033.54	3	7002	00185053	01/04/1988 00:00	2	4	LESS THAN 30MPH	BACK OF FOOTPATH	800	SINGLE ARM	NOT APPLICABLE	RIGID COLUMN	URBIS	AXIA 2 S1	PETITJEAN	SHEET STEEL	6	GALVANISED	DAER
46100208	BURTON ROAD	Burton upon Stather Parish	489423.82	418047.04	4	7003	00185054	01/04/1988 00:00	2	4	LESS THAN 30MPH	ON POLE	300	SINGLE ARM	NOT APPLICABLE	POLE MOUNTED	URBIS	AXIA 2 S1	WOODEN PO	WOOD	5	NOT APPLICABI	Not Applicable
46100208	BURTON ROAD	Burton upon Stather Parish	489397.46	418061.82	5	7004	00185055	01/04/1988 00:00	2	4	LESS THAN 30MPH	ON POLE	300	SINGLE ARM	NOT APPLICABLE	POLE MOUNTED	URBIS	AXIA 2 S1	WOODEN PO	WOOD	6	NOT APPLICABI	Not Applicable
46100208	BURTON ROAD	Burton upon Stather Parish	489381.39	418055.39	6	7005	00185056	01/04/1988 00:00	2	4	LESS THAN 30MPH	BACK OF FOOTPATH	800	SINGLE ARM	NOT APPLICABLE	RIGID COLUMN	URBIS	AXIA 2 S1	PETITJEAN	SHEET STEEL	6	GALVANISED	DAER
46100208	BURTON ROAD	Burton upon Stather Parish	489337.04	418064.39	7	7006	00185057	01/04/1988 00:00	2	4	LESS THAN 30MPH	ON POLE	300	SINGLE ARM	NOT APPLICABLE	POLE MOUNTED	URBIS	AXIA 2 S1	WOODEN PO	WOOD	6	NOT APPLICABI	Not Applicable
46100208	BURTON ROAD	Burton upon Stather Parish	489303.62	418055.39	8	7007	00185058	01/04/1988 00:00	2	4	LESS THAN 30MPH	BACK OF FOOTPATH	800	SINGLE ARM	NOT APPLICABLE	RIGID COLUMN	URBIS	AXIA 2 S1	PETITJEAN	SHEET STEEL	6	GALVANISED	DAER
46100208	BURTON ROAD	Burton upon Stather Parish	489275.53	418063.84	9	7008	00185059	01/04/1988 00:00	2	4	LESS THAN 30MPH	ON POLE	300	SINGLE ARM	NOT APPLICABLE	POLE MOUNTED	URBIS	AXIA 2 S1	WOODEN PO	WOOD	6	NOT APPLICABI	Not Applicable
46100209	BURTON ROAD	Flixborough Parish	487193.13	415042.03	1	7000	00185061	01/04/1986 00:00	2	1	LESS THAN 30MPH	BACK OF FOOTPATH	0	POST TOP	NOT APPLICABLE	RIGID COLUMN	URBIS	AXIA 2 S1	PETITJEAN	SHEET STEEL	5	GALVANISED	NIDD
46100209	BURTON ROAD	Flixborough Parish	487163.21	415043.46	2	7001	00185062	01/04/1986 00:00	2	1	LESS THAN 30MPH	BACK OF FOOTPATH	0	POST TOP	NOT APPLICABLE	RIGID COLUMN	URBIS	AXIA 2 S1	PETITJEAN	SHEET STEEL	5	GALVANISED	NIDD
46100209	BURTON ROAD	Flixborough Parish	487136.71	415046.58	3	7002	00185063	01/04/1986 00:00	2	1	LESS THAN 30MPH	BACK OF FOOTPATH	0	POST TOP	NOT APPLICABLE	RIGID COLUMN	URBIS	AXIA 2 S1	PETITJEAN	SHEET STEEL	5	GALVANISED	NIDD
46100209	BURTON ROAD	Flixborough Parish	487104.1	415047.26	4	7003	00185064	01/04/1986 00:00	2	1	LESS THAN 30MPH	BACK OF FOOTPATH	0	POST TOP	NOT APPLICABLE	RIGID COLUMN	URBIS	AXIA 2 S1	PETITJEAN	SHEET STEEL	5	GALVANISED	NIDD
46100209	BURTON ROAD	Flixborough Parish	487070.98	415044.33	5	7004	00185065	01/04/1986 00:00	2	1	LESS THAN 30MPH	BACK OF FOOTPATH	0	POST TOP	NOT APPLICABLE	RIGID COLUMN	URBIS	AXIA 2 S1	PETITJEAN	SHEET STEEL	5	GALVANISED	NIDD
46100209	BURTON ROAD	Flixborough Parish	487047.98	415040.41	6FP	7008	00185069	01/04/2008 00:00	2	1	LESS THAN 30MPH	VERGE	0	POST TOP	NOT APPLICABLE	RIGID COLUMN	URBIS	AXIA 2 S1	BRITISH STEE	TUBULAR STEEL	6	GALVANISED	ASH
46100209	BURTON ROAD	Flixborough Parish	487036.2	415058.77	7	7005	00185066	13/04/2021 00:00	2	1	LESS THAN 30MPH	VERGE	0	POST TOP	NOT APPLICABLE	RIGID COLUMN	URBIS	AXIA 2 S1	MALLATITE	TUBULAR STEEL	6	GALVANISED	TUBULAR
46100209	BURTON ROAD	Flixborough Parish	487029.68	415093.04	8	7006	00185067	13/04/2021 00:00	2	1	LESS THAN 30MPH	VERGE	0	POST TOP	NOT APPLICABLE	RIGID COLUMN	URBIS	AXIA 2 S1	MALLATITE	TUBULAR STEEL	6	GALVANISED	TUBULAR
46100209	BURTON ROAD	Flixborough Parish	487025.99	415131.25	9	7007	00185068	13/04/2021 00:00	2	1	LESS THAN 30MPH	VERGE	0	POST TOP	NOT APPLICABLE	RIGID COLUMN	URBIS	AXIA 2 S1	MALLATITE	TUBULAR STEEL	6	GALVANISED	TUBULAR
46100210	BUSHFIELD ROAD	Scunthorpe	489780.6	410369.7	1	7000	00185070	01/04/1980 00:00	2	4	LESS THAN 30MPH	VERGE	300	SINGLE ARM	NOT APPLICABLE	RIGID COLUMN	URBIS	AXIA 2 S1	T AND L	TUBULAR STEEL	5	GALVANISED	STEPPED TUBULAR
46100210	BUSHFIELD ROAD	Scunthorpe	489592.19	410203.11	10	7009	00185079	11/02/2020 00:00	2	4	LESS THAN 30MPH	VERGE	0	POST TOP	NOT APPLICABLE	RIGID COLUMN	URBIS	AXIA 2 S1	MALLATITE	TUBULAR STEEL	6	GALVANISED	TUBULAR
46100210	BUSHFIELD ROAD	Scunthorpe	489581.16	410169.9	11	7010	00185080	11/02/2020 00:00	2	4	LESS THAN 30MPH	VERGE	0	POST TOP	NOT APPLICABLE	RIGID COLUMN	URBIS	AXIA 2 S1	MALLATITE	TUBULAR STEEL	6	GALVANISED	TUBULAR
46100210	BUSHFIELD ROAD	Scunthorpe	489564.17	410135.62	12	7011	00185081	04/03/2022 00:00	2	4	LESS THAN 30MPH	BACK OF FOOTPATH	0	POST TOP	NOT APPLICABLE	RIGID COLUMN	URBIS	AXIA 2 S1	MALLATITE	TUBULAR STEEL	6	GALVANISED	TUBULAR
46100210	BUSHFIELD ROAD	Scunthorpe	489540.83	410113.75	13	7012	00185082	01/04/1992 00:00	2	4	LESS THAN 30MPH	VERGE	300	SINGLE ARM	NOT APPLICABLE	RIGID COLUMN	URBIS	AXIA 2 S1	PETITJEAN	SHEET STEEL	5	GALVANISED	DAER
46100210	BUSHFIELD ROAD	Scunthorpe	489508.02	410092.98	14	7013	00185083	01/04/2014 00:00	2	4	LESS THAN 30MPH	VERGE	0	POST TOP	NOT APPLICABLE	RIGID COLUMN	URBIS	AXIA 2 S1	MALLATITE	TUBULAR STEEL	6	GALVANISED	TUBULAR
46100210	BUSHFIELD ROAD	Scunthorpe	489475.53	410081.13	15	7014	00185084	01/04/1992 00:00	2	4	LESS THAN 30MPH	VERGE	300	SINGLE ARM	NOT APPLICABLE	RIGID COLUMN	URBIS	AXIA 2 S1	PETITJEAN	SHEET STEEL	5	GALVANISED	DAER
46100210	BUSHFIELD ROAD	Scunthorpe	489439.69	410073.98	16	7015	00185085	01/04/1985 00:00	2	4	LESS THAN 30MPH	VERGE	300	SINGLE ARM	NOT APPLICABLE	RIGID COLUMN	URBIS	AXIA 2 S1	PETITJEAN	SHEET STEEL	5	GALVANISED	DAER
46100210	BUSHFIELD ROAD	Scunthorpe	489401.11	410071.07	17	7016	00185086	01/04/2013 00:00	2	4	LESS THAN 30MPH	VERGE	0	POST TOP	NOT APPLICABLE	RIGID COLUMN	URBIS	AXIA 2 S1	MALLATITE	TUBULAR STEEL	6	GALVANISED	TUBULAR
46100210	BUSHFIELD ROAD	Scunthorpe	489363.98	410078.51	18	7017	00185087	01/04/2013 00:00	2	4	LESS THAN 30MPH	VERGE	0	POST TOP	NOT APPLICABLE	RIGID COLUMN	URBIS	AXIA 2 S1	MALLATITE	TUBULAR STEEL	6	GALVANISED	TUBULAR
46100210	BUSHFIELD ROAD	Scunthorpe	489330.62	410073.42	19	7018	00185088	11/02/2020 00:00	2	4	LESS THAN 30MPH	VERGE	0	POST TOP	NOT APPLICABLE	RIGID COLUMN	URBIS	AXIA 2 S1	MALLATITE	TUBULAR STEEL	6	GALVANISED	TUBULAR
46100210	BUSHFIELD ROAD	Scunthorpe	489753.97	410373.06	2	7001	00185071	11/02/2020 00:00	2	4	LESS THAN 30MPH	BACK OF FOOTPATH	0	POST TOP	NOT APPLICABLE	RIGID COLUMN	URBIS	AXIA 2 S1	MALLATITE	TUBULAR STEEL	6	GALVANISED	TUBULAR
46100210	BUSHFIELD ROAD	Scunthorpe	489296.76	410078.89	20	7019	00185089	11/02/2020 00:00	2	4	LESS THAN 30MPH	VERGE	0	POST TOP	NOT APPLICABLE	RIGID COLUMN	URBIS	AXIA 2 S1	MALLATITE	TUBULAR STEEL	6	GALVANISED	TUBULAR
46100210	BUSHFIELD ROAD	Scunthorpe	489255.9	410084.27	21	7020	00185090	01/04/2004 00:00	2	4	LESS THAN 30MPH	BACK OF FOOTPATH	300	SINGLE ARM	NOT APPLICABLE	RIGID COLUMN	URBIS	AXIA 2 S1	MALLATITE	TUBULAR STEEL	6	GALVANISED	STEPPED TUBULAR
46100210	BUSHFIELD ROAD	Scunthorpe	489221.16	410101.04	22	7021	00185091	11/02/2020 00:00	2	4	LESS THAN 30MPH	VERGE	0	POST TOP	NOT APPLICABLE	RIGID COLUMN	URBIS	AXIA 2 S1	MALLATITE	TUBULAR STEEL	6	GALVANISED	TUBULAR
46100210	BUSHFIELD ROAD	Scunthorpe	489727.87	410365.03	3	7002	00185072	11/02/2020 00:00	2	4	LESS THAN 30MPH	BACK OF FOOTPATH	0	POST TOP	NOT APPLICABLE	RIGID COLUMN	URBIS	AXIA 2 S1	MALLATITE	TUBULAR STEEL	6	GALVANISED	TUBULAR
46100210	BUSHFIELD ROAD	Scunthorpe	489714.13	410352.12	4	7003	00185073	01/04/2013 00:00	2	4	LESS THAN 30MPH	BACK OF FOOTPATH	0	POST TOP	NOT APPLICABLE	RIGID COLUMN	URBIS	AXIA 2 S1	MALLATITE	TUBULAR STEEL	6	GALVANISED	TUBULAR
46100210	BUSHFIELD ROAD	Scunthorpe	489683.51	410342.81	5	7004	00185074	11/02/2020 00:00	2	4	LESS THAN 30MPH	BACK OF FOOTPATH	0	POST TOP	NOT APPLICABLE	RIGID COLUMN	URBIS	AXIA 2 S1	MALLATITE	TUBULAR STEEL	6	GALVANISED	TUBULAR
46100210	BUSHFIELD ROAD	Scunthorpe	489657.43	410322.52	6	7005	00185075	11/02/2020 00:00	2	4	LESS THAN 30MPH	BACK OF FOOTPATH	0	POST TOP	NOT APPLICABLE	RIGID COLUMN	URBIS	AXIA 2 S1	MALLATITE	TUBULAR STEEL	6	GALVANISED	TUBULAR
46100210	BUSHFIELD ROAD	Scunthorpe	489635.04	410300.84	7	7006	00185076	11/02/2020 00:00	2	4	LESS THAN 30MPH	BACK OF FOOTPATH	0	POST TOP	NOT APPLICABLE	RIGID COLUMN	URBIS	AXIA 2 S1	MALLATITE	TUBULAR STEEL	6	GALVANISED	TUBULAR
46100210	BUSHFIELD ROAD	Scunthorpe	489613.52	410267.33	8	7007	00185077	11/02/2020 00:00	2	4	LESS THAN 30MPH	VERGE	0	POST TOP	NOT APPLICABLE	RIGID COLUMN	URBIS	AXIA 2 S1	MALLATITE	TUBULAR STEEL	6	GALVANISED	TUBULAR
46100210	BUSHFIELD ROAD	Scunthorpe	489606.5	410233.89	9	7008	00185078	01/04/2004 00:00	2	4	LESS THAN 30MPH	BACK OF FOOTPATH	300	SINGLE ARM	NOT APPLICABLE	RIGID COLUMN	URBIS	AXIA 2 S1	MALLATITE	TUBULAR STEEL	6	GALVANISED	STEPPED TUBULAR
46100212	BUTTERWICK ROAD	Messingham Parish	489320.44	404351.52	1	7001	00185093	01/04/1973 00:00	4	1	LESS THAN 30MPH	BACK OF FOOTPATH	800	SINGLE ARM	LIGHT GREY	RIGID COLUMN	URBIS	AXIA 2 S1	PETITJEAN	SHEET STEEL	6	PAINTED	DAER
46100212	BUTTERWICK ROAD	Messingham Parish	489001.74	404246.15	10	7018	00185110	02/02/2017 00:00	4	1	LESS THAN 30MPH	BACK OF FOOTPATH	0	POST TOP	NOT APPLICABLE	RIGID COLUMN	URBIS	AXIA 2 S1	MALLATITE	TUBULAR STEEL	6	GALVANISED	TUBULAR
46100212	BUTTERWICK ROAD	Messingham Parish	488231.04	404263.09	11	7013	00185105	01/04/2003 00:00	4	1	BETWEEN 30-50 MPH	VERGE	800	SINGLE ARM	NOT APPLICABLE	RIGID COLUMN	URBIS	AXIA 2 S1	PETITJEAN	SHEET STEEL	8	GALVANISED	THAMES
46100212	BUTTERWICK ROAD	Messingham Parish	488201	404269.1	12	7015	00185107	01/04/2003 00:00	4	1	BETWEEN 30-50 MPH	VERGE	800	SINGLE ARM	NOT APPLICABLE	RIGID COLUMN	URBIS	AXIA 2 S1	PETITJEAN	SHEET STEEL	8	GALVANISED	THAMES
46100212	BUTTERWICK ROAD	Messingham Parish	488176.93	404273.8	13	7017	00185109	01/04/2003 00:00	4	1	BETWEEN 30-50 MPH	VERGE	800	SINGLE ARM	NOT APPLICABLE	RIGID COLUMN	URBIS	AXIA 2 S1	PETITJEAN	SHEET STEEL	8	GALVANISED	THAMES
46100212	BUTTERWICK ROAD	Messingham Parish	488152.35	404260.14	14	7019	00185111	01/04/2003 00:00	4	1	BETWEEN 30-50 MPH	VERGE	800	SINGLE ARM	NOT APPLICABLE	RIGID COLUMN	URBIS	AXIA 2 S1	PETITJEAN	SHEET STEEL	8	GALVANISED	THAMES
46100212	BUTTERWICK ROAD	Messingham Parish	488123.94	404276.53	15	7020	00185112	01/04/2003 00:00	4	1	BETWEEN 30-50 MPH	VERGE	800	SINGLE ARM	NOT APPLICABLE	RIGID COLUMN	URBIS	AXIA 2 S1	PETITJEAN	SHEET STEEL	8	GALVANISED	THAMES
46100212	BUTTERWICK ROAD	Messingham Parish	488078.05	404278.17	16	7021	00185113	01/04/2003 00:00	4	1	BETWEEN 30-50 MPH	VERGE	800	SINGLE ARM	NOT APPLICABLE	RIGID COLUMN	URBIS	AXIA 2 S1	PETITJEAN	SHEET STEEL	8	GALVANISED	THAMES
46100212	BUTTERWICK ROAD	Messingham Parish	488036.43	404280.19	17	7022	00185114	01/04/2003 00:00	4	1	BETWEEN 30-50 MPH	VERGE	800	SINGLE ARM	NOT APPLICABLE	RIGID COLUMN	URBIS	AXIA 2 S1	PETITJEAN	SHEET STEEL	8	GALVANISED	THAMES
46100212	BUTTERWICK ROAD	Messingham Parish	489293.26	404347.34	2	7002	00185094	01/04/1973 00:00	4	1	LESS THAN 30MPH	BACK OF FOOTPATH	800	SINGLE ARM	LIGHT GREY	RIGID COLUMN	URBIS	AXIA 2 S1	PETITJEAN	SHEET STEEL	6	PAINTED	DAER
46100212	BUTTERWICK ROAD	Messingham Parish	489254.65	404343.77	3	7004	00185096	01/04/1973 00:00	4	1	LESS THAN 30MPH	BACK OF FOOTPATH	800	SINGLE ARM	LIGHT GREY	RIGID COLUMN	URBIS	AXIA 2 S1	PETITJEAN	SHEET STEEL	6	PAINTED	DAER
46100212	BUTTERWICK ROAD	Messingham Parish	489220.39	404340.31	4	7006	00185098	01/04/1973 00:00	4	1	LESS THAN 30MPH	BACK OF FOOTPATH	800	SINGLE ARM	LIGHT GREY	RIGID COLUMN	URBIS	AXIA 2 S1	PETITJEAN	SHEET STEEL	6	PAINTED	DAER
46100212	BUTTERWICK ROAD	Messingham Parish	489181.81	404336.84	5	7008	00185100	01/04/1973 00:00	4	1	LESS THAN 30MPH	BACK OF FOOTPATH	800	SINGLE ARM	LIGHT GREY	RIGID COLUMN	URBIS	AXIA 2 S1	PETITJEAN	SHEET STEEL	6	PAINTED	DAER
46100212	BUTTERWICK ROAD	Messingham Parish	489145.42	404327.96	6	7010	00185102	02/02/2017 00:00	4	1	LESS THAN 30MPH	BACK OF FOOTPATH	0	POST TOP	NOT APPLICABLE	RIGID COLUMN	URBIS	AXIA 2 S1	MALLATITE	TUBULAR STEEL	6	GALVANISED	TUBULAR
46100212	BUTTERWICK ROAD	Messingham Parish	489111.72	404303.29	7	7012	00185104	02/02/2017 00:00	4	1	LESS THAN 30MPH	BACK OF FOOTPATH	0	POST TOP	NOT APPLICABLE	RIGID COLUMN	URBIS	AXIA 2 S1	MALLATITE	TUBULAR STEEL	6	GALVANISED	TUBULAR
46100212	BUTTERWICK ROAD	Messingham Parish	489080.28	404277.64	8	7014	00185106	02/02/2017 00:00	4	1	LESS THAN 30MPH	BACK OF FOOTPATH	0	POST TOP	NOT APPLICABLE	RIGID COLUMN	URBIS	AXIA 2 S1	MALLATITE	TUBULAR STEEL	6	GALVANISED	TUBULAR
46100212	BUTTERWICK ROAD	Messingham Parish	489038.64	404258.76	9	7016	00185108	02/02/2017 00:00	4	1	LESS THAN 30MPH	BACK OF FOOTPATH	0	POST TOP	NOT APPLICABLE	RIGID COLUMN	URBIS	AXIA 2 S1	MALLATITE	TUBULAR STEEL	6	GALVANISED	TUBULAR
46100213	BYFIELD ROAD	Scunthorpe	487558.03	408512.84	1	7012	00185127	01/04/2003 00:00	5	2	NOT ON A ROAD	BACK OF FOOTPATH	0	POST TOP	NOT APPLICABLE	MID HINGED	URBIS	AXIA 2 S1	PETITJEAN	SHEET STEEL	5	GALVANISED	LEVEN
46100213	BYFIELD ROAD	Scunthorpe	487611.66	408468.23	1	7000	00185115	01/04/1990 00:00	5	2	LESS THAN 30MPH	BACK OF FOOTPATH	800	SINGLE ARM	NOT APPLICABLE	RIGID COLUMN	URBIS	AXIA 2 S1	PETITJEAN	SHEET STEEL	6	GALVANISED	DAER
46100213	BYFIELD ROAD	Scunthorpe	487586.05	408699.59	10	7009	00185124	01/04/1990 00:00	5	2	LESS THAN 30MPH	BACK OF FOOTPATH	800	SINGLE ARM	NOT APPLICABLE	RIGID COLUMN	URBIS	AXIA 2 S1	PETITJEAN	SHEET STEEL	6	GALVANISED	DAER
46100213	BYFIELD ROAD	Scunthorpe	487569.74	408724.25	11	7010	00185125	01/04/1990 00:00	5	2	LESS THAN 30MPH	BACK OF FOOTPATH	800	SINGLE ARM	NOT APPLICABLE	RIGID COLUMN	URBIS	AXIA 2 S1	PETITJEAN	SHEET STEEL	6	GALVANISED	DAER
46100213	BYFIELD ROAD	Scunthorpe	487577.45	408754.5	12	7011	00185126	01/04/1990 00:00	5	2	LESS THAN 30MPH	FRONT OF FOOTPATH	800	SINGLE ARM	NOT APPLICABLE	RIGID COLUMN	URBIS	AXIA 2 S1	PETITJEAN	SHEET STEEL	6	GALVANISED	DAER
46100213	BYFIELD ROAD	Scunthorpe	487606.75	408487.64	2	7001	00185116	01/04/1990 00:00	5	2	LESS THAN 30MPH	BACK OF FOOTPATH	800	SINGLE ARM	NOT APPLICABLE	RIGID COLUMN	URBIS	AXIA 2 S1	PETITJEAN	SHEET STEEL	6	GALVANISED	DAER
46100213	BYFIELD ROAD	Scunthorpe	487588.58	408508.88	3	7002	00185117	01/04/1990 00:00	5	2	LESS THAN 30MPH	VERGE	800	SINGLE ARM	NOT APPLICABLE	RIGID COLUMN	URBIS	AXIA 2 S1	PETITJEAN	SHEET STEEL	6	GALVANISED	DAER
46100213	BYFIELD ROAD	Scunthorpe	487595.13	408536.08	4	7003	00185118	01/04/1990 00:00	5	2	LESS THAN 30MPH	BACK OF FOOTPATH	800	SINGLE ARM	NOT APPLICABLE	RIGID COLUMN	URBIS	AXIA 2 S1	PETITJEAN	SHEET STEEL	6	GALVANISED	DAER
46100213	BYFIELD ROAD	Scunthorpe	487592.67	408563.6	5	7004	00185119	01/04/1990 00:00	5	2	LESS THAN 30MPH	BACK OF FOOTPATH	800	SINGLE ARM	NOT APPLICABLE	RIGID COLUMN	URBIS	AXIA 2 S1	PETITJEAN	SHEET STEEL	6	GALVANISED	DAER
46100213	BYFIELD ROAD	Scunthorpe	487595.19	408591.93	6	7005	00185120	01/04/1990 00:00	5	2	LESS THAN 30MPH	BACK OF FOOTPATH	800	SINGLE ARM	NOT APPLICABLE	RIGID COLUMN	URBIS	AXIA 2 S1	PETITJEAN	SHEET STEEL	6	GALVANISED	DAER
46100213	BYFIELD ROAD	Scunthorpe	487597.88	408619.86	7	7006	00185121	01/04/1990 00:00	5	2	LESS THAN 30MPH	BACK OF FOOTPATH	800	SINGLE ARM	NOT APPLICABLE	RIGID COLUMN	URBIS	AXIA 2 S1	PETITJEAN	SHEET STEEL	6	GALVANISED	DAER
46100213	BYFIELD ROAD	Scunthorpe	487596.39	408648.2	8	7007	00185122	01/04/1990 00:00	5	2	LESS THAN 30MPH	BACK OF FOOTPATH	800	SINGLE ARM	NOT APPLICABLE	RIGID COLUMN	URBIS	AXIA 2 S1	PETITJEAN	SHEET STEEL	6	GALVANISED	DAER
46100213	BYFIELD ROAD	Scunthorpe	487592.28	408675.65	9	7008	00185123	01/04/1990 00:00	5	2	LESS THAN 30MPH	BACK OF FOOTPATH	800	SINGLE ARM	NOT APPLICABLE	RIGID COLUMN	URBIS	AXIA 2 S1	PETITJEAN	SHEET STEEL	6	GALVANISED	DAER
46100214	BYRD ROAD	Scunthorpe	491065.01	408786.82	1	7000	00185128	01/04/1980 00:00	3	2	LESS THAN 30MPH	BACK OF FOOTPATH	800	SINGLE ARM	NOT APPLICABLE	RIGID COLUMN	URBIS	AXIA 2 S1	PETITJEAN	SHEET STEEL	5	GALVANISED	DAER
46100214	BYRD ROAD	Scunthorpe	491057.01	408823.27	2	7001	00185129	01/04/1980 00:00	3	2	LESS THAN 30MPH	BACK OF FOOTPATH	800	SINGLE ARM	NOT APPLICABLE	RIGID COLUMN	URBIS	AXIA 2 S1	PETITJEAN	SHEET STEEL	5	GALVANISED	DAER
46100215	BYRON CLOSE	Scunthorpe	488176.02	408964.69	1	7000	00185130	01/04/2007 00:00	5	2	LESS THAN 30MPH	FRONT OF FOOTPATH	0	POST TOP	NOT APPLICABLE	RIGID COLUMN	URBIS	AXIA 2 S1	VALMONT ST	TUBULAR STEEL	6	GALVANISED	TUBULAR
46100215	BYRON CLOSE	Scunthorpe	488148.99	408966.95	2	7001	00185131	01/04/2007 00:00	5	2	LESS THAN 30MPH	FRONT OF FOOTPATH	0	POST TOP	NOT APPLICABLE	RIGID COLUMN	URBIS	AXIA 2 S1	VALMONT ST	TUBULAR STEEL	6	GALVANISED	TUBULAR
46100215	BYRON CLOSE	Scunthorpe	488121.4	408956.02	3	7002	00185132	01/04/2007 00:00	5	2	LESS THAN 30MPH	FRONT OF FOOTPATH	0	POST TOP	NOT APPLICABLE	RIGID COLUMN	URBIS	AXIA 2 S1	VALMONT ST	TUBULAR STEEL	6	GALVANISED	TUBULAR
46100215	BYRON CLOSE	Scunthorpe	488101.65	408970.1	4	7003	00185133	01/04/2007 00:00	5	2	LESS THAN 30MPH	FRONT OF FOOTPATH	0	POST TOP	NOT APPLICABLE	RIGID COLUMN	URBIS	AXIA 2 S1	VALMONT ST	TUBULAR STEEL	6	GALVANISED	TUBULAR
46100215	BYRON CLOSE	Scunthorpe	488106	408944.56	5	7004	00185134	10/04/2007 00:00	5	2	LESS THAN 30MPH	FRONT OF FOOTPATH	0	POST TOP	NOT APPLICABLE	RIGID COLUMN	URBIS	AXIA 2 S1	VALMONT ST	TUBULAR STEEL	6	GALVANISED	TUBULAR
46100216	CAENBY ROAD	Scunthorpe	488193.4	408323.7	1	7004	00185139	01/04/2006 00:00	3	4	LESS THAN 30MPH	BACK OF FOOTPATH	0	POST TOP	NOT APPLICABLE	RIGID COLUMN	URBIS	AXIA 2 S1	MALLATITE	TUBULAR STEEL	6	GALVANISED	TUBULAR
46100216	CAENBY ROAD	Scunthorpe	488193.5	408294.3	2	7005	00185140	01/04/2006 00:00	3	4	LESS THAN 30MPH	BACK OF FOOTPATH	0	POST TOP	NOT APPLICABLE	RIGID COLUMN	URBIS	AXIA 2 S1	MALLATITE	TUBULAR STEEL	6	GALVANISED	TUBULAR
46100216	CAENBY ROAD	Scunthorpe	488203.88	408266.07	3	7000	00185135	01/04/2006 00:00	3	4	LESS THAN 30MPH	BACK OF FOOTPATH	0	POST TOP	NOT APPLICABLE	RIGID COLUMN	URBIS	AXIA 2 S1	MALLATITE	TUBULAR STEEL	6	GALVANISED	TUBULAR
46100216	CAENBY ROAD	Scunthorpe	488212.94	408244.14	4	7001	00185136	01/04/2006 00:00	3	4	LESS THAN 30MPH	BACK OF FOOTPATH	0	POST TOP	NOT APPLICABLE	RIGID COLUMN	URBIS	AXIA 2 S1	MALLATITE	TUBULAR STEEL	6	GALVANISED	TUBULAR
46100216	CAENBY ROAD	Scunthorpe	488242.29	408230.81	5	7002	00185137	01/04/2006 00:00	3	4	LESS THAN 30MPH	BACK OF FOOTPATH	0	POST TOP	NOT APPLICABLE	RIGID COLUMN	URBIS	AXIA 2 S1	MALLATITE	TUBULAR STEEL	6	GALVANISED	TUBULAR
46100216	CAENBY ROAD	Scunthorpe	488269.4	408230.6	6	7003	00185138	01/04/2006 00:00	3	4	LESS THAN 30MPH	BACK OF FOOTPATH	0	POST TOP	NOT APPLICABLE	RIGID COLUMN	URBIS	AXIA 2 S1	MALLATITE	TUBULAR STEEL	6	GALVANISED	TUBULAR
46100217	CAISTOR ROAD	Barton upon Humber Parish	503255.18	421636.76	1	7000	00185147	01/04/2005 00:00	5	2	LESS THAN 30MPH	BACK OF FOOTPATH	800	SINGLE ARM	BLACK	RIGID COLUMN	METCRAFT	WINSTON 3	METCRAFT	TUBULAR STEEL	8	PAINTED	TUBULAR
46100217	CAISTOR ROAD	Barton upon Humber Parish	503452.11	421448.43	10	7009	00185156	01/04/2005 00:00	5	2	LESS THAN 30MPH	FRONT OF FOOTPATH	300	SINGLE ARM	MID GREY	RIGID COLUMN	URBIS	AXIA 2 S1	PETITJEAN	SHEET STEEL	8	PAINTED	RIBBLE
46100217	CAISTOR ROAD	Barton upon Humber Parish	503484.58	421429.07	11	7010	00185157	01/04/1978 00:00	5	2	LESS THAN 30MPH	FRONT OF FOOTPATH	300	SINGLE ARM	MID GREY	RIGID COLUMN	URBIS	AXIA 2 S1	PETITJEAN	SHEET STEEL	8	PAINTED	THAMES
46100217	C

46100241	CARY LANE	Brigg Parish	499938.3	407233.5	1	7000	00185322	01/04/1993 00:00	2	3	LESS THAN 30MPH	BACK OF FOOTPATH	1250	SINGLE ARM	NOT APPLICABLE	RIGID COLUMN	URBIS	AXIA 2 S1	PETITJEAN	SHEET STEEL	8	GALVANISED	THAMES
46100241	CARY LANE	Brigg Parish	499928.59	407263.64	2	7001	00185323	01/04/2006 00:00	2	3	LESS THAN 30MPH	BACK OF FOOTPATH	1250	SINGLE ARM	NOT APPLICABLE	RIGID COLUMN	URBIS	AXIA 2 S1	MALLATITE	SHEET STEEL	10	GALVANISED	THAMES
46100241	CARY LANE	Brigg Parish	499916.69	407301.41	3	7002	00185324	01/04/2006 00:00	2	3	LESS THAN 30MPH	BACK OF FOOTPATH	1250	SINGLE ARM	NOT APPLICABLE	RIGID COLUMN	URBIS	AXIA 2 S1	MALLATITE	SHEET STEEL	10	GALVANISED	THAMES
46100241	CARY LANE	Brigg Parish	499949.17	407292.76	4	7003	00185325	01/04/2006 00:00	2	3	LESS THAN 30MPH	BACK OF FOOTPATH	1250	SINGLE ARM	NOT APPLICABLE	RIGID COLUMN	URBIS	AXIA 2 S1	MALLATITE	SHEET STEEL	10	GALVANISED	THAMES
46100241	CARY LANE	Brigg Parish	499947.35	407313.48	5	7004	00185326	01/04/2006 00:00	2	3	LESS THAN 30MPH	BACK OF FOOTPATH	1250	SINGLE ARM	NOT APPLICABLE	RIGID COLUMN	URBIS	AXIA 2 S1	MALLATITE	SHEET STEEL	8	GALVANISED	THAMES
46100241	CARY LANE	Brigg Parish	499944.4	407340.08	6	7005	00185327	01/04/2006 00:00	2	3	LESS THAN 30MPH	BACK OF FOOTPATH	1250	SINGLE ARM	NOT APPLICABLE	RIGID COLUMN	URBIS	AXIA 2 S1	MALLATITE	SHEET STEEL	10	GALVANISED	THAMES
46100241	CARY LANE	Brigg Parish	499939.51	407365.84	7	7006	00185328	01/04/2006 00:00	2	3	LESS THAN 30MPH	BACK OF FOOTPATH	1250	SINGLE ARM	NOT APPLICABLE	RIGID COLUMN	URBIS	AXIA 2 S1	MALLATITE	SHEET STEEL	10	GALVANISED	THAMES
46100241	CARY LANE	Brigg Parish	499939.6	407403.1	8	7007	00185329	01/04/2006 00:00	2	3	LESS THAN 30MPH	BACK OF FOOTPATH	1250	SINGLE ARM	NOT APPLICABLE	RIGID COLUMN	URBIS	AXIA 2 S1	MALLATITE	SHEET STEEL	10	GALVANISED	THAMES
46100243	CASTLE DRIVE	Epworth Parish	478558.81	403944.98	1	7000	00185330	01/04/1985 00:00	5	3	LESS THAN 30MPH	VERGE	0	POST TOP	NOT APPLICABLE	RIGID COLUMN	URBIS	AXIA 2 S1	PETITJEAN	TUBULAR STEEL	5	GALVANISED	METRO
46100243	CASTLE DRIVE	Epworth Parish	478549.92	403976.12	2	7001	00185331	01/04/1985 00:00	5	3	LESS THAN 30MPH	VERGE	0	POST TOP	NOT APPLICABLE	RIGID COLUMN	URBIS	AXIA 2 S1	PETITJEAN	TUBULAR STEEL	5	GALVANISED	METRO
46100243	CASTLE DRIVE	Epworth Parish	478532.18	403983.92	3	7002	00185332	01/04/1985 00:00	5	3	LESS THAN 30MPH	VERGE	0	POST TOP	NOT APPLICABLE	RIGID COLUMN	URBIS	AXIA 2 S1	PETITJEAN	TUBULAR STEEL	5	GALVANISED	METRO
46100243	CASTLE DRIVE	Epworth Parish	478507.11	403976.31	4	7003	00185333	01/04/1985 00:00	5	3	LESS THAN 30MPH	VERGE	0	POST TOP	NOT APPLICABLE	RIGID COLUMN	URBIS	AXIA 2 S1	PETITJEAN	TUBULAR STEEL	5	GALVANISED	METRO
46100243	CASTLE DRIVE	Epworth Parish	478480.52	403964.52	5	7004	00185334	01/04/1985 00:00	5	3	LESS THAN 30MPH	VERGE	0	POST TOP	NOT APPLICABLE	RIGID COLUMN	URBIS	AXIA 2 S1	PETITJEAN	TUBULAR STEEL	5	GALVANISED	METRO
46100244	CASTLEDYKE SOUTH	Barton upon Humber Parish	503116.74	421804.48	1	7000	00185335	01/04/2010 00:00	5	2	LESS THAN 30MPH	BACK OF FOOTPATH	0	POST TOP	NOT APPLICABLE	RIGID COLUMN	URBIS	AXIA 2 S1	MALLATITE	TUBULAR STEEL	6	GALVANISED	TUBULAR
46100244	CASTLEDYKE SOUTH	Barton upon Humber Parish	503146.62	421795.08	2	7001	00185336	01/04/2010 00:00	5	2	LESS THAN 30MPH	VERGE	0	POST TOP	NOT APPLICABLE	RIGID COLUMN	URBIS	AXIA 2 S1	MALLATITE	TUBULAR STEEL	6	GALVANISED	TUBULAR
46100244	CASTLEDYKE SOUTH	Barton upon Humber Parish	503168.91	421788.44	3	7002	00185337	01/04/1984 00:00	5	2	LESS THAN 30MPH	VERGE	300	SINGLE ARM	NOT APPLICABLE	RIGID COLUMN	URBIS	AXIA 2 S1	T AND L	TUBULAR STEEL	5	GALVANISED	STEPPED TUBULAR
46100244	CASTLEDYKE SOUTH	Barton upon Humber Parish	503198.97	421779.42	4	7003	00185338	01/04/1984 00:00	5	2	LESS THAN 30MPH	VERGE	800	SINGLE ARM	NOT APPLICABLE	RIGID COLUMN	URBIS	AXIA 2 S1	PETITJEAN	SHEET STEEL	5	GALVANISED	DAER
46100244	CASTLEDYKE SOUTH	Barton upon Humber Parish	503230.29	421773.32	5	7004	00185339	01/04/2015 00:00	5	2	LESS THAN 30MPH	VERGE	0	POST TOP	NOT APPLICABLE	RIGID COLUMN	URBIS	AXIA 2 S1	MALLATITE	TUBULAR STEEL	6	GALVANISED	TUBULAR
46100244	CASTLEDYKE SOUTH	Barton upon Humber Parish	503205.75	421753.63	6	7005	00185340	01/04/1984 00:00	5	2	LESS THAN 30MPH	VERGE	300	SINGLE ARM	MID GREY	RIGID COLUMN	URBIS	AXIA 2 S1	PETITJEAN	SHEET STEEL	5	PAINTED	DAER
46100244	CASTLEDYKE SOUTH	Barton upon Humber Parish	503195.94	421727.6	7	7006	00185341	01/04/1984 00:00	5	2	LESS THAN 30MPH	VERGE	300	SINGLE ARM	MID GREY	RIGID COLUMN	URBIS	AXIA 2 S1	PETITJEAN	SHEET STEEL	5	PAINTED	DAER
46100244	CASTLEDYKE SOUTH	Barton upon Humber Parish	503176.39	421706.25	8	7007	00185342	24/05/2016 00:00	5	2	LESS THAN 30MPH	VERGE	0	POST TOP	NOT APPLICABLE	RIGID COLUMN	URBIS	AXIA 2 S1	MALLATITE	TUBULAR STEEL	6	GALVANISED	TUBULAR
46100244	CASTLEDYKE SOUTH	Barton upon Humber Parish	503165.44	421671.57	9	7008	00185343	01/04/1984 00:00	5	2	LESS THAN 30MPH	VERGE	300	SINGLE ARM	MID GREY	RIGID COLUMN	URBIS	AXIA 2 S1	PETITJEAN	SHEET STEEL	5	PAINTED	DAER
46100245	CASTLETON ROAD	Gunness Parish	486891.35	410881.02	1	7000	00185344	01/04/1980 00:00	2	2	LESS THAN 30MPH	BACK OF FOOTPATH	0	POST TOP	LIGHT GREY	RIGID COLUMN	URBIS	AXIA 2 S1	PETITJEAN	SHEET STEEL	5	PAINTED	NIDD
46100245	CASTLETON ROAD	Gunness Parish	486857.36	410872.73	2FP	7003	00185347	01/04/1980 00:00	2	2	LESS THAN 30MPH	BACK OF FOOTPATH	0	POST TOP	LIGHT GREY	RIGID COLUMN	URBIS	AXIA 2 S1	PETITJEAN	SHEET STEEL	5	PAINTED	NIDD
46100245	CASTLETON ROAD	Gunness Parish	486829.27	410866.63	3FP	7004	00185348	01/04/1980 00:00	2	2	LESS THAN 30MPH	BACK OF FOOTPATH	0	POST TOP	LIGHT GREY	RIGID COLUMN	URBIS	AXIA 2 S1	PETITJEAN	SHEET STEEL	5	PAINTED	NIDD
46100245	CASTLETON ROAD	Gunness Parish	486800.48	410864.82	4	7001	00185345	01/04/1980 00:00	2	2	LESS THAN 30MPH	BACK OF FOOTPATH	0	POST TOP	LIGHT GREY	RIGID COLUMN	URBIS	AXIA 2 S1	PETITJEAN	SHEET STEEL	5	PAINTED	NIDD
46100245	CASTLETON ROAD	Gunness Parish	486767.29	410872.67	5FP	7005	00185349	01/04/1980 00:00	2	2	LESS THAN 30MPH	BACK OF FOOTPATH	0	POST TOP	LIGHT GREY	RIGID COLUMN	URBIS	AXIA 2 S1	PETITJEAN	SHEET STEEL	5	PAINTED	NIDD
46100245	CASTLETON ROAD	Gunness Parish	486757.24	410847.53	6	7002	00185346	01/04/1980 00:00	2	2	LESS THAN 30MPH	BACK OF FOOTPATH	0	POST TOP	LIGHT GREY	RIGID COLUMN	URBIS	AXIA 2 S1	PETITJEAN	SHEET STEEL	5	PAINTED	NIDD
46100245	CASTLETON ROAD	Gunness Parish	486765.04	410828.18	7FP	7006	00185350	01/04/1980 00:00	2	2	LESS THAN 30MPH	BACK OF FOOTPATH	0	POST TOP	LIGHT GREY	RIGID COLUMN	URBIS	AXIA 2 S1	PETITJEAN	SHEET STEEL	5	PAINTED	NIDD
46100246	CATHERINE STREET	Barton upon Humber Parish	503232.17	422152.99	1	7000	00185351	01/04/1994 00:00	5	2	LESS THAN 30MPH	BACK OF FOOTPATH	300	SINGLE ARM	MID GREY	RIGID COLUMN	URBIS	AXIA 2 S1	PETITJEAN	SHEET STEEL	6	PAINTED	DAER
46100246	CATHERINE STREET	Barton upon Humber Parish	503208.17	422173.48	2	7001	00185352	01/04/2016 00:00	5	2	LESS THAN 30MPH	BACK OF FOOTPATH	0	POST TOP	NOT APPLICABLE	RIGID COLUMN	URBIS	AXIA 2 S1	MALLATITE	TUBULAR STEEL	6	GALVANISED	TUBULAR
46100246	CATHERINE STREET	Barton upon Humber Parish	503183.98	422202.31	3	7002	00185353	12/06/2019 00:00	5	2	LESS THAN 30MPH	BACK OF FOOTPATH	0	POST TOP	NOT APPLICABLE	RIGID COLUMN	URBIS	AXIA 2 S1	MALLATITE	TUBULAR STEEL	6	GALVANISED	TUBULAR
46100247	CAVENDISH ROAD	Bottesford Parish	489431.06	407651.48	1	7000	00185354	01/04/2001 00:00	3	1	LESS THAN 30MPH	VERGE	0	POST TOP	NOT APPLICABLE	RIGID COLUMN	URBIS	AXIA 2 S1	MALLATITE	TUBULAR STEEL	5	GALVANISED	STEPPED TUBULAR
46100247	CAVENDISH ROAD	Bottesford Parish	489450.68	407625.94	2	7001	00185355	01/04/2001 00:00	3	1	LESS THAN 30MPH	BACK OF FOOTPATH	0	POST TOP	NOT APPLICABLE	RIGID COLUMN	URBIS	AXIA 2 S1	MALLATITE	TUBULAR STEEL	5	GALVANISED	STEPPED TUBULAR
46100247	CAVENDISH ROAD	Bottesford Parish	489455.53	407596.56	3	7002	00185356	01/04/2001 00:00	3	1	LESS THAN 30MPH	BACK OF FOOTPATH	0	POST TOP	NOT APPLICABLE	RIGID COLUMN	URBIS	AXIA 2 S1	MALLATITE	TUBULAR STEEL	5	GALVANISED	STEPPED TUBULAR
46100247	CAVENDISH ROAD	Bottesford Parish	489460.51	407569.76	4	7003	00185357	01/04/2001 00:00	3	1	LESS THAN 30MPH	VERGE	0	POST TOP	NOT APPLICABLE	RIGID COLUMN	URBIS	AXIA 2 S1	MALLATITE	TUBULAR STEEL	5	GALVANISED	STEPPED TUBULAR
46100247	CAVENDISH ROAD	Bottesford Parish	489465.13	407541.23	5	7004	00185358	01/04/2001 00:00	3	1	LESS THAN 30MPH	VERGE	0	POST TOP	NOT APPLICABLE	RIGID COLUMN	URBIS	AXIA 2 S1	MALLATITE	TUBULAR STEEL	5	GALVANISED	STEPPED TUBULAR
46100247	CAVENDISH ROAD	Bottesford Parish	489469.43	407519.72	6	7005	00185359	01/04/2001 00:00	3	1	LESS THAN 30MPH	VERGE	0	POST TOP	NOT APPLICABLE	RIGID COLUMN	URBIS	AXIA 2 S1	MALLATITE	TUBULAR STEEL	5	GALVANISED	STEPPED TUBULAR
46100248	CECILE CRESCENT	Scunthorpe	488162.55	411449.65	1	7000	00185360	01/04/2001 00:00	6	3	LESS THAN 30MPH	BACK OF FOOTPATH	0	POST TOP	NOT APPLICABLE	RIGID COLUMN	URBIS	AXIA 2 S1	MALLATITE	TUBULAR STEEL	5	GALVANISED	STEPPED TUBULAR
46100248	CECILE CRESCENT	Scunthorpe	488163.26	411478.57	2	7001	00185361	01/04/2001 00:00	6	3	LESS THAN 30MPH	BACK OF FOOTPATH	0	POST TOP	NOT APPLICABLE	RIGID COLUMN	URBIS	AXIA 2 S1	MALLATITE	TUBULAR STEEL	5	GALVANISED	STEPPED TUBULAR
46100248	CECILE CRESCENT	Scunthorpe	488166.85	411507.85	3	7002	00185362	01/04/2001 00:00	6	3	LESS THAN 30MPH	BACK OF FOOTPATH	0	POST TOP	NOT APPLICABLE	RIGID COLUMN	URBIS	AXIA 2 S1	MALLATITE	TUBULAR STEEL	5	GALVANISED	STEPPED TUBULAR
46100250	CEMETERY ROAD	Scunthorpe	489792.49	410616.85	1	7000	00185363	01/04/2010 00:00	2	4	LESS THAN 30MPH	BACK OF FOOTPATH	1000	SINGLE ARM	NOT APPLICABLE	RIGID COLUMN	URBIS	AXIA 2 S1	VALMONT ST	SHEET STEEL	8	GALVANISED	THAMES
46100250	CEMETERY ROAD	Scunthorpe	489809.74	410280.64	10	7009	00185372	04/09/2020 00:00	2	4	LESS THAN 30MPH	BACK OF FOOTPATH	1000	SINGLE ARM	NOT APPLICABLE	RIGID COLUMN	URBIS	AXIA 2 S1	MALLATITE	TUBULAR STEEL	8	GALVANISED	TUBULAR
46100250	CEMETERY ROAD	Scunthorpe	489821.85	410254.21	11FP	7010	00185373	01/04/2010 00:00	2	4	LESS THAN 30MPH	FRONT OF FOOTPATH	500	SINGLE ARM	NOT APPLICABLE	RIGID COLUMN	URBIS	AXIA 2 S1	MALLATITE	SHEET STEEL	8	GALVANISED	THAMES
46100250	CEMETERY ROAD	Scunthorpe	489823.57	410224.84	12	7011	00185374	04/09/2020 00:00	2	4	LESS THAN 30MPH	BACK OF FOOTPATH	1000	SINGLE ARM	NOT APPLICABLE	RIGID COLUMN	URBIS	AXIA 2 S1	MALLATITE	TUBULAR STEEL	8	GALVANISED	TUBULAR
46100250	CEMETERY ROAD	Scunthorpe	489817.33	410195.94	13	7012	00185375	04/09/2020 00:00	2	4	LESS THAN 30MPH	BACK OF FOOTPATH	1000	SINGLE ARM	NOT APPLICABLE	RIGID COLUMN	URBIS	AXIA 2 S1	MALLATITE	TUBULAR STEEL	8	GALVANISED	TUBULAR
46100250	CEMETERY ROAD	Scunthorpe	489818.69	410164.82	14	7013	00185376	05/07/2019 00:00	2	4	LESS THAN 30MPH	BACK OF FOOTPATH	1000	SINGLE ARM	NOT APPLICABLE	RIGID COLUMN	URBIS	AXIA 2 S1	MALLATITE	TUBULAR STEEL	8	GALVANISED	TUBULAR
46100250	CEMETERY ROAD	Scunthorpe	489833.59	410136.18	15	7014	00185377	01/04/1980 00:00	2	4	LESS THAN 30MPH	BACK OF FOOTPATH	2000	SINGLE ARM	NOT APPLICABLE	RIGID COLUMN	URBIS	AXIA 2 S1	PETITJEAN	SHEET STEEL	8	GALVANISED	THAMES
46100250	CEMETERY ROAD	Scunthorpe	489824.99	410102.63	16	7015	00185378	04/09/2020 00:00	2	4	LESS THAN 30MPH	BACK OF FOOTPATH	1000	SINGLE ARM	NOT APPLICABLE	RIGID COLUMN	URBIS	AXIA 2 S1	MALLATITE	TUBULAR STEEL	8	GALVANISED	TUBULAR
46100250	CEMETERY ROAD	Scunthorpe	489826.86	410076.08	17	7016	00185379	03/10/2020 00:00	2	4	LESS THAN 30MPH	BACK OF FOOTPATH	1000	SINGLE ARM	NOT APPLICABLE	RIGID COLUMN	URBIS	AXIA 2 S1	MALLATITE	TUBULAR STEEL	8	GALVANISED	TUBULAR
46100250	CEMETERY ROAD	Scunthorpe	489837.74	410046.33	18	7017	00185380	04/09/2020 00:00	2	4	LESS THAN 30MPH	BACK OF FOOTPATH	1000	SINGLE ARM	NOT APPLICABLE	RIGID COLUMN	URBIS	AXIA 2 S1	MALLATITE	TUBULAR STEEL	8	GALVANISED	TUBULAR
46100250	CEMETERY ROAD	Scunthorpe	489832.66	410017.08	19	7018	00185381	01/04/2010 00:00	2	4	LESS THAN 30MPH	FRONT OF FOOTPATH	500	SINGLE ARM	NOT APPLICABLE	RIGID COLUMN	URBIS	AXIA 2 S1	VALMONT ST	SHEET STEEL	8	GALVANISED	THAMES
46100250	CEMETERY ROAD	Scunthorpe	489784.88	410580.68	2	7001	00185364	04/09/2020 00:00	2	4	LESS THAN 30MPH	BACK OF FOOTPATH	1000	SINGLE ARM	NOT APPLICABLE	RIGID COLUMN	URBIS	AXIA 2 S1	MALLATITE	TUBULAR STEEL	8	GALVANISED	TUBULAR
46100250	CEMETERY ROAD	Scunthorpe	489844.44	409987.89	20FP	7019	00185382	04/09/2020 00:00	2	4	LESS THAN 30MPH	BACK OF FOOTPATH	1000	SINGLE ARM	NOT APPLICABLE	RIGID COLUMN	URBIS	AXIA 2 S1	MALLATITE	TUBULAR STEEL	8	GALVANISED	TUBULAR
46100250	CEMETERY ROAD	Scunthorpe	489845.49	409964.2	21	7020	00185383	01/04/1980 00:00	2	4	LESS THAN 30MPH	BACK OF FOOTPATH	1500	SINGLE ARM	NOT APPLICABLE	RIGID COLUMN	URBIS	AXIA 2 S1	PETITJEAN	SHEET STEEL	8	GALVANISED	THAMES
46100250	CEMETERY ROAD	Scunthorpe	489834.9	409931.55	22	7021	00185384	04/09/2020 00:00	2	4	LESS THAN 30MPH	BACK OF FOOTPATH	1000	SINGLE ARM	NOT APPLICABLE	RIGID COLUMN	URBIS	AXIA 2 S1	MALLATITE	TUBULAR STEEL	8	GALVANISED	TUBULAR
46100250	CEMETERY ROAD	Scunthorpe	489846.89	409908.06	23	7022	00185385	01/04/1980 00:00	2	4	LESS THAN 30MPH	BACK OF FOOTPATH	2000	SINGLE ARM	NOT APPLICABLE	RIGID COLUMN	URBIS	AXIA 2 S1	PETITJEAN	SHEET STEEL	8	GALVANISED	THAMES
46100250	CEMETERY ROAD	Scunthorpe	489845.69	409876.79	24	7023	00185386	04/09/2020 00:00	2	4	LESS THAN 30MPH	BACK OF FOOTPATH	1000	SINGLE ARM	NOT APPLICABLE	RIGID COLUMN	URBIS	AXIA 2 S1	MALLATITE	TUBULAR STEEL	8	GALVANISED	TUBULAR
46100250	CEMETERY ROAD	Scunthorpe	489836.69	409837.57	25	7024	00185387	04/09/2020 00:00	2	4	LESS THAN 30MPH	BACK OF FOOTPATH	1000	SINGLE ARM	NOT APPLICABLE	RIGID COLUMN	URBIS	AXIA 2 S1	MALLATITE	TUBULAR STEEL	8	GALVANISED	TUBULAR
46100250	CEMETERY ROAD	Scunthorpe	489845.9	409811.39	26	7025	00185388	04/09/2020 00:00	2	4	LESS THAN 30MPH	BACK OF FOOTPATH	1000	SINGLE ARM	NOT APPLICABLE	RIGID COLUMN	URBIS	AXIA 2 S1	MALLATITE	TUBULAR STEEL	8	GALVANISED	TUBULAR
46100250	CEMETERY ROAD	Scunthorpe	489847.15	409784.92	27	7026	00185389	04/09/2020 00:00	2	4	LESS THAN 30MPH	BACK OF FOOTPATH	1000	SINGLE ARM	NOT APPLICABLE	RIGID COLUMN	URBIS	AXIA 2 S1	MALLATITE	TUBULAR STEEL	8	GALVANISED	TUBULAR
46100250	CEMETERY ROAD	Scunthorpe	489837.45	409759.89	28	7027	00185390	04/09/2020 00:00	2	4	LESS THAN 30MPH	BACK OF FOOTPATH	1000	SINGLE ARM	NOT APPLICABLE	RIGID COLUMN	URBIS	AXIA 2 S1	MALLATITE	TUBULAR STEEL	8	GALVANISED	TUBULAR
46100250	CEMETERY ROAD	Scunthorpe	489788.19	410543.74	3	7002	00185365	04/09/2020 00:00	2	4	LESS THAN 30MPH	BACK OF FOOTPATH	1000	SINGLE ARM	NOT APPLICABLE	RIGID COLUMN	URBIS	AXIA 2 S1	MALLATITE	TUBULAR STEEL	8	GALVANISED	TUBULAR
46100250	CEMETERY ROAD	Scunthorpe	489800.64	410523.44	4	7003	00185366	04/09/2020 00:00	2	4	LESS THAN 30MPH	BACK OF FOOTPATH	1000	SINGLE ARM	NOT APPLICABLE	RIGID COLUMN	URBIS	AXIA 2 S1	MALLATITE	TUBULAR STEEL	8	GALVANISED	TUBULAR
46100250	CEMETERY ROAD	Scunthorpe	489804.49	410480.83	5	7004	00185367	04/09/2020 00:00	2	4	LESS THAN 30MPH	BACK OF FOOTPATH	1000	SINGLE ARM	NOT APPLICABLE	RIGID COLUMN	URBIS	AXIA 2 S1	MALLATITE	TUBULAR STEEL	8	GALVANISED	TUBULAR
46100250	CEMETERY ROAD	Scunthorpe	489796.45	410448.12	6	7005	00185368	04/09/2020 00:00	2	4	LESS THAN 30MPH	BACK OF FOOTPATH	1000	SINGLE ARM	NOT APPLICABLE	RIGID COLUMN	URBIS	AXIA 2 S1	MALLATITE	TUBULAR STEEL	8	GALVANISED	TUBULAR
46100250	CEMETERY ROAD	Scunthorpe	489799.45	410413.39	7	7006	00185369	04/09/2020 00:00	2	4	LESS THAN 30MPH	BACK OF FOOTPATH	1000	SINGLE ARM	NOT APPLICABLE	RIGID COLUMN	URBIS	AXIA 2 S1	MALLATITE	TUBULAR STEEL	8	GALVANISED	TUBULAR
46100250	CEMETERY ROAD	Scunthorpe	489812.16	410374.43	8	7007	00185370	04/09/2020 00:00	2	4	LESS THAN 30MPH	BACK OF FOOTPATH	1000	SINGLE ARM	NOT APPLICABLE	RIGID COLUMN	URBIS	AXIA 2 S1	MALLATITE	TUBULAR STEEL	8	GALVANISED	TUBULAR
46100250	CEMETERY ROAD	Scunthorpe	489802.83	410334.62	9	7008	00185371	04/09/2020 00:00	2	4	LESS THAN 30MPH	BACK OF FOOTPATH	1000	SINGLE ARM	NOT APPLICABLE	RIGID COLUMN	URBIS	AXIA 2 S1	MALLATITE	TUBULAR STEEL	8	GALVANISED	TUBULAR
46100251	CEMETERY ROAD	Winterton Parish	493127.18	418570.19	1	7000	00185391	01/04/2015 00:00	1	1	LESS THAN 30MPH	ON POLE	300	SINGLE ARM	NOT APPLICABLE	POLE MOUNTED	URBIS	AXIA 2 S1	WOODEN PO	WOOD	5	NOT APPLICABI	PUDSEY DIAMOND
46100251	CEMETERY ROAD	Winterton Parish	493527.22	418524.18	10	7009	00185400	19/07/2017 00:00	1	1	LESS THAN 30MPH	ON POLE	300	SINGLE ARM	NOT APPLICABLE	POLE MOUNTED	URBIS	AXIA 2 S1	WOODEN PO	WOOD	5	NOT APPLICABI	Not Applicable
46100251	CEMETERY ROAD	Winterton Parish	493569.23	418516.66	11	7010	00185401	01/04/2015 00:00	1	1	LESS THAN 30MPH	ON POLE	300	SINGLE ARM	NOT APPLICABLE	POLE MOUNTED	URBIS	AXIA 2 S1	WOODEN PO	WOOD	5	NOT APPLICABI	Not Applicable
46100251	CEMETERY ROAD	Winterton Parish	493603.85	418512.01	12	7011	00185402	01/04/1990 00:00	1	1	LESS THAN 30MPH	BACK OF FOOTPATH	300	SINGLE ARM	MID GREY	RIGID COLUMN	URBIS	AXIA 2 S1	PETITJEAN	SHEET STEEL	5	PAINTED	DAER
46100251	CEMETERY ROAD	Winterton Parish	493620.94	418509.78	13	7012	00185403	01/04/1990 00:00	1	1	LESS THAN 30MPH	BACK OF FOOTPATH	300	SINGLE ARM	MID GREY	RIGID COLUMN	URBIS	AXIA 2 S1	PETITJEAN	SHEET STEEL	5	PAINTED	DAER
46100251	CEMETERY ROAD	Winterton Parish	493648.51	418514.05	14	7013	00185404	01/04/1980 00:00	1	1	LESS THAN 30MPH	VERGE	300	SINGLE ARM	MID GREY	RIGID COLUMN	URBIS	AXIA 2 S1	PETITJEAN	SHEET STEEL	5	PAINTED	DAER
46100251	CEMETERY ROAD	Winterton Parish	493679.72	418502.17	15	7014	00185405	01/04/1980 00:00	1	1	LESS THAN 30MPH	VERGE	300	SINGLE ARM	MID GREY	RIGID COLUMN	URBIS	AXIA 2 S1	PETITJEAN	SHEET STEEL	5	PAINTED	DAER
46100251	CEMETERY ROAD	Winterton Parish	493695.72	418477.24	16	7015	00185406	01/04/1980 00:00	1	1	LESS THAN 30MPH	VERGE	300	SINGLE ARM	MID GREY	RIGID COLUMN	URBIS	AXIA 2 S1	PETITJEAN	SHEET STEEL	5	PAINTED	DAER
46100251	CEMETERY ROAD	Winterton Parish	493699.17	418446.23	17	7016	00185407	01/04/1990 00:00	1	1	LESS THAN 30MPH	VERGE	300	SINGLE ARM	MID GREY	RIGID COLUMN	URBIS	AXIA 2 S1	PETITJEAN	SHEET STEEL	6	PAINTED	DAER
46100251	CEMETERY ROAD	Winterton Parish	493171.26	418565.59	2	7001	00185392	01/04/2015 00:00	1	1	LESS THAN 30MPH	ON POLE	300	SINGLE ARM	NOT APPLICABLE	POLE MOUNTED	URBIS	AXIA 2 S1	WOODEN PO	WOOD	5	NOT APPLICABI	Not Applicable
46100251	CEMETERY ROAD	Winterton Parish	493215.57	418560.17	3	7002	00185393	01/04/2015 00:00	1	1	LESS THAN 30MPH	ON POLE	300	SINGLE ARM	NOT APPLICABLE	POLE MOUNTED	URBIS	AXIA 2 S1	WOODEN PO	WOOD	5	NOT APPLICABI	Not Applicable
46100251	CEMETERY ROAD	Winterton Parish	493254.16	418555.57	4	7003	00185394	01/04/2015 00:00	1	1	LESS THAN 30MPH	ON POLE	300	SINGLE ARM	NOT APPLICABLE	POLE MOUNTED	URBIS	AXIA 2 S1	WOODEN PO	WOOD	5	NOT APPLICABI	Not Applicable
46100251	CEMETERY ROAD	Winterton Parish	493295.75	418551.6	5	7004	00185395	19/07/2017 00:00	1	1	LESS THAN 30MPH	ON POLE	300	SINGLE ARM	NOT APPLICABLE	POLE MOUNTED	URBIS	AXIA 2 S1	WOODEN PO	WOOD	5	NOT APPLICABI	Not Applicable
46100251	CEMETERY ROAD	Winterton Parish	493341.78	418546.61	6	7005	00185396	01/04/2015 00:00	1	1	LESS THAN 30MPH	ON POLE	300	SINGLE ARM	NOT APPLICABLE	POLE MOUNTED	URBIS	AXIA 2 S1	WOODEN PO	WOOD	5	NOT APPLICABI	Not Applicable
46100251	CEMETERY ROAD	Winterton Parish	493388.38	418541.29	7	7006	00185397	01/04/1980 00:00	1	1	LESS THAN 30MPH	ON POLE	300	SINGLE ARM	NOT APPLICABLE	POLE MOUNTED	URBIS	AXIA 2 S1	WOODEN PO	WOOD	5	NOT APPLICABI	Not Applicable
46100251	CEMETERY ROAD	Winterton Parish	493434.67	418536.71	8	7007	00185398	01/04/2015 00:00	1	1	LESS THAN 30MPH	ON POLE	300	SINGLE ARM	NOT APPLICABLE	POLE MOUNTED	URBIS	AXIA 2 S1	WOODEN PO	WOOD	5	NOT APPLICABI	Not Applicable
46100251	CEMETERY ROAD	Winterton Parish	493477.23	418531.75	9	7008	00185399	01/04/2015 00:00	1	1	LESS THAN 30MPH	ON POLE	300	SINGLE ARM	NOT APPLICABLE	POLE MOUNTED	URBIS	AXIA 2 S1	WOODEN PO	WOOD	5	NOT APPLICABI	Not Applicable
46100253	CHAFFINCH CLOSE	Scunthorpe	487758.53	412419.44	1	7000	00185408	01/04/1995 00:00	2	3	LESS THAN 30MPH	VERGE	0	POST TOP	NOT APPLICABLE	RIGID COLUMN	URBIS	AXIA 2 S1	PETITJEAN

46100286	CHELWOOD ROAD	Scunthorpe	488614.17	409064.62	6	7005	00185585	01/04/1990 00:00	5	4	LESS THAN 30MPH	BACK OF FOOTPATH	300	SINGLE ARM	NOT APPLICABLE	RIGID COLUMN	URBIS	AXIA 2 S1	PETITJEAN	SHEET STEEL	6	GALVANISED	DAER
46100287	CHERRY GROVE	Belton Parish	478270.57	406068.11	1	7000	00185586	01/04/1980 00:00	5	3	LESS THAN 30MPH	BACK OF FOOTPATH	0	POST TOP	NOT APPLICABLE	RIGID COLUMN	URBIS	AXIA 2 S1	PETITJEAN	SHEET STEEL	5	GALVANISED	NIDD
46100287	CHERRY GROVE	Belton Parish	478265.75	406041.75	2	7001	00185587	01/04/1980 00:00	5	3	LESS THAN 30MPH	BACK OF FOOTPATH	0	POST TOP	NOT APPLICABLE	RIGID COLUMN	URBIS	AXIA 2 S1	PETITJEAN	SHEET STEEL	5	GALVANISED	NIDD
46100287	CHERRY GROVE	Belton Parish	478272.49	406012.91	3	7002	00185588	01/04/1980 00:00	5	3	LESS THAN 30MPH	BACK OF FOOTPATH	0	POST TOP	NOT APPLICABLE	RIGID COLUMN	URBIS	AXIA 2 S1	PETITJEAN	SHEET STEEL	5	GALVANISED	NIDD
46100287	CHERRY GROVE	Belton Parish	478279.48	405985.49	4	7003	00185589	01/04/1980 00:00	5	3	LESS THAN 30MPH	BACK OF FOOTPATH	0	POST TOP	NOT APPLICABLE	RIGID COLUMN	URBIS	AXIA 2 S1	PETITJEAN	SHEET STEEL	5	GALVANISED	NIDD
46100288	CHERRY GROVE	Scunthorpe	489957.45	408888.3	10	7009	00185599	01/04/2012 00:00	2	4	LESS THAN 30MPH	VERGE	0	POST TOP	NOT APPLICABLE	RIGID COLUMN	URBIS	AXIA 2 S1	MALLATITE	TUBULAR STEEL	6	GALVANISED	TUBULAR
46100288	CHERRY GROVE	Scunthorpe	489980.4	408912.16	11	7010	00185600	01/04/2012 00:00	2	4	NOT ON A ROAD	VERGE	0	POST TOP	NOT APPLICABLE	MID HINGED	URBIS	AXIA 2 S1	VALMONT ST	SHEET STEEL	5	GALVANISED	LEVEN
46100288	CHERRY GROVE	Scunthorpe	489956.5	408908.9	12	7011	00185601	01/04/2012 00:00	2	4	NOT ON A ROAD	VERGE	0	POST TOP	NOT APPLICABLE	MID HINGED	URBIS	AXIA 2 S1	VALMONT ST	SHEET STEEL	5	GALVANISED	LEVEN
46100288	CHERRY GROVE	Scunthorpe	489930.8	408908	13	7012	00185602	01/04/2012 00:00	2	4	NOT ON A ROAD	VERGE	0	POST TOP	NOT APPLICABLE	MID HINGED	URBIS	AXIA 2 S1	VALMONT ST	SHEET STEEL	5	GALVANISED	LEVEN
46100288	CHERRY GROVE	Scunthorpe	489905.6	408910.9	14	7013	00185603	01/04/2012 00:00	2	4	NOT ON A ROAD	VERGE	0	POST TOP	NOT APPLICABLE	MID HINGED	URBIS	AXIA 2 S1	VALMONT ST	SHEET STEEL	5	GALVANISED	LEVEN
46100288	CHERRY GROVE	Scunthorpe	489876.8	408910.3	15	7014	00185604	01/04/2012 00:00	2	4	NOT ON A ROAD	VERGE	0	POST TOP	NOT APPLICABLE	MID HINGED	URBIS	AXIA 2 S1	VALMONT ST	SHEET STEEL	5	GALVANISED	LEVEN
46100288	CHERRY GROVE	Scunthorpe	489930.6	408921.3	16	7015	00185605	01/04/2012 00:00	2	4	NOT ON A ROAD	VERGE	0	POST TOP	NOT APPLICABLE	MID HINGED	URBIS	AXIA 2 S1	VALMONT ST	SHEET STEEL	5	GALVANISED	LEVEN
46100288	CHERRY GROVE	Scunthorpe	489930.3	408948.5	17	7016	00185606	01/04/2012 00:00	2	4	NOT ON A ROAD	VERGE	0	POST TOP	NOT APPLICABLE	MID HINGED	URBIS	AXIA 2 S1	VALMONT ST	SHEET STEEL	5	GALVANISED	LEVEN
46100288	CHERRY GROVE	Scunthorpe	489929.4	408975.6	18	7017	00185607	01/04/2012 00:00	2	4	NOT ON A ROAD	VERGE	0	POST TOP	NOT APPLICABLE	MID HINGED	URBIS	AXIA 2 S1	VALMONT ST	SHEET STEEL	5	GALVANISED	LEVEN
46100288	CHERRY GROVE	Scunthorpe	489871.2	408999.1	1FP	7000	00185590	01/04/2012 00:00	2	4	LESS THAN 30MPH	BACK OF FOOTPATH	0	POST TOP	NOT APPLICABLE	RIGID COLUMN	URBIS	AXIA 2 S1	MALLATITE	TUBULAR STEEL	6	GALVANISED	TUBULAR
46100288	CHERRY GROVE	Scunthorpe	489905.3	408990	2	7001	00185591	01/04/2012 00:00	2	4	LESS THAN 30MPH	BACK OF FOOTPATH	0	POST TOP	NOT APPLICABLE	RIGID COLUMN	URBIS	AXIA 2 S1	MALLATITE	TUBULAR STEEL	6	GALVANISED	TUBULAR
46100288	CHERRY GROVE	Scunthorpe	489936.88	409000.96	3	7002	00185592	01/04/2012 00:00	2	4	LESS THAN 30MPH	BACK OF FOOTPATH	0	POST TOP	NOT APPLICABLE	RIGID COLUMN	URBIS	AXIA 2 S1	MALLATITE	TUBULAR STEEL	6	GALVANISED	TUBULAR
46100288	CHERRY GROVE	Scunthorpe	489974.8	409000.9	4	7003	00185593	01/04/2012 00:00	2	4	LESS THAN 30MPH	BACK OF FOOTPATH	0	POST TOP	NOT APPLICABLE	RIGID COLUMN	URBIS	AXIA 2 S1	MALLATITE	TUBULAR STEEL	6	GALVANISED	TUBULAR
46100288	CHERRY GROVE	Scunthorpe	490000	408979.6	5FP	7004	00185594	01/04/2012 00:00	2	4	LESS THAN 30MPH	BACK OF FOOTPATH	0	POST TOP	NOT APPLICABLE	RIGID COLUMN	URBIS	AXIA 2 S1	MALLATITE	TUBULAR STEEL	6	GALVANISED	TUBULAR
46100288	CHERRY GROVE	Scunthorpe	489999.8	408942.4	6	7005	00185595	01/04/2012 00:00	2	4	LESS THAN 30MPH	BACK OF FOOTPATH	0	POST TOP	NOT APPLICABLE	RIGID COLUMN	URBIS	AXIA 2 S1	MALLATITE	TUBULAR STEEL	6	GALVANISED	TUBULAR
46100288	CHERRY GROVE	Scunthorpe	490001.1	408910.9	7	7006	00185596	01/04/2012 00:00	2	4	LESS THAN 30MPH	BACK OF FOOTPATH	0	POST TOP	NOT APPLICABLE	RIGID COLUMN	URBIS	AXIA 2 S1	MALLATITE	TUBULAR STEEL	6	GALVANISED	TUBULAR
46100288	CHERRY GROVE	Scunthorpe	489998.9	408888.35	8	7007	00185597	01/04/2012 00:00	2	4	LESS THAN 30MPH	VERGE	0	POST TOP	NOT APPLICABLE	RIGID COLUMN	URBIS	AXIA 2 S1	MALLATITE	TUBULAR STEEL	6	GALVANISED	TUBULAR
46100288	CHERRY GROVE	Scunthorpe	489975.11	408887.18	9	7008	00185598	01/04/2012 00:00	2	4	LESS THAN 30MPH	VERGE	0	POST TOP	NOT APPLICABLE	RIGID COLUMN	URBIS	AXIA 2 S1	MALLATITE	TUBULAR STEEL	6	GALVANISED	TUBULAR
46100289	CHERRY LANE	Barrow upon Humber Parish	507354.32	421822.81	1	7000	00185608	29/06/2018 00:00	4	1	LESS THAN 30MPH	ON POLE	300	SINGLE ARM	NOT APPLICABLE	POLE MOUNTED	URBIS	AXIA 2 S1	WOODEN PO	WOOD	4	NOT APPLICABI	PUDSEY DIAMOND
46100289	CHERRY LANE	Barrow upon Humber Parish	507073.27	421799.27	10	7009	00185617	01/04/1973 00:00	4	1	LESS THAN 30MPH	VERGE	300	SINGLE ARM	NOT APPLICABLE	RIGID COLUMN	URBIS	AXIA 2 S1	PETITJEAN	SHEET STEEL	5	GALVANISED	DAER
46100289	CHERRY LANE	Barrow upon Humber Parish	507317.61	421823.74	2	7001	00185609	01/04/1973 00:00	4	1	LESS THAN 30MPH	BACK OF FOOTPATH	500	SINGLE ARM	MID GREY	RIGID COLUMN	URBIS	AXIA 2 S1	PETITJEAN	SHEET STEEL	5	PAINTED	DAER
46100289	CHERRY LANE	Barrow upon Humber Parish	507282.69	421820.72	3	7002	00185610	01/04/1973 00:00	4	1	LESS THAN 30MPH	BACK OF FOOTPATH	500	SINGLE ARM	MID GREY	RIGID COLUMN	URBIS	AXIA 2 S1	PETITJEAN	SHEET STEEL	5	PAINTED	DAER
46100289	CHERRY LANE	Barrow upon Humber Parish	507249.27	421820.91	4	7003	00185611	01/04/1973 00:00	4	1	LESS THAN 30MPH	BACK OF FOOTPATH	300	SINGLE ARM	NOT APPLICABLE	RIGID COLUMN	URBIS	AXIA 2 S1	PETITJEAN	SHEET STEEL	5	GALVANISED	DAER
46100289	CHERRY LANE	Barrow upon Humber Parish	507225.1	421816.65	5	7004	00185612	01/04/1973 00:00	4	1	LESS THAN 30MPH	BACK OF FOOTPATH	500	SINGLE ARM	MID GREY	RIGID COLUMN	URBIS	AXIA 2 S1	PETITJEAN	SHEET STEEL	5	PAINTED	DAER
46100289	CHERRY LANE	Barrow upon Humber Parish	507197.87	421805.59	6	7005	00185613	01/04/1973 00:00	4	1	LESS THAN 30MPH	BACK OF FOOTPATH	300	SINGLE ARM	NOT APPLICABLE	RIGID COLUMN	URBIS	AXIA 2 S1	PETITJEAN	SHEET STEEL	5	GALVANISED	DAER
46100289	CHERRY LANE	Barrow upon Humber Parish	507171.29	421788.74	7	7006	00185614	01/04/1973 00:00	4	1	LESS THAN 30MPH	BACK OF FOOTPATH	300	SINGLE ARM	NOT APPLICABLE	RIGID COLUMN	URBIS	AXIA 2 S1	PETITJEAN	SHEET STEEL	5	GALVANISED	DAER
46100289	CHERRY LANE	Barrow upon Humber Parish	507142.76	421794.15	8	7007	00185615	01/04/1973 00:00	4	1	LESS THAN 30MPH	BACK OF FOOTPATH	300	SINGLE ARM	NOT APPLICABLE	RIGID COLUMN	URBIS	AXIA 2 S1	PETITJEAN	SHEET STEEL	5	GALVANISED	DAER
46100289	CHERRY LANE	Barrow upon Humber Parish	507103.92	421794.36	9	7008	00185616	01/04/1973 00:00	4	1	LESS THAN 30MPH	BACK OF FOOTPATH	300	SINGLE ARM	NOT APPLICABLE	RIGID COLUMN	URBIS	AXIA 2 S1	PETITJEAN	SHEET STEEL	5	GALVANISED	DAER
46100290	CHERRY LANE	Wootton Parish	508510.25	416029.29	1	7000	00185618	01/04/1980 00:00	4	4	LESS THAN 30MPH	VERGE	0	POST TOP	NOT APPLICABLE	RIGID COLUMN	URBIS	AXIA 2 S1	PETITJEAN	SHEET STEEL	5	GALVANISED	NIDD
46100290	CHERRY LANE	Wootton Parish	508545.73	415669.88	10	7009	00185627	25/01/2024 00:00	4	4	LESS THAN 30MPH	VERGE	0	POST TOP	NOT APPLICABLE	RIGID COLUMN	URBIS	AXIA 2 S1	MALLATITE	TUBULAR STEEL	5	GALVANISED	TUBULAR
46100290	CHERRY LANE	Wootton Parish	508550.01	415632.47	11	7010	00185628	25/01/2024 00:00	4	4	LESS THAN 30MPH	VERGE	0	POST TOP	NOT APPLICABLE	RIGID COLUMN	URBIS	AXIA 2 S1	MALLATITE	TUBULAR STEEL	5	GALVANISED	TUBULAR
46100290	CHERRY LANE	Wootton Parish	508516.38	415992.64	2	7001	00185619	01/04/1980 00:00	4	4	LESS THAN 30MPH	VERGE	300	SINGLE ARM	NOT APPLICABLE	POLE MOUNTED	URBIS	AXIA 2 S1	WOODEN PO	WOOD	5	NOT APPLICABI	Not Applicable
46100290	CHERRY LANE	Wootton Parish	508519.15	415948.13	3	7002	00185620	01/04/1980 00:00	4	4	LESS THAN 30MPH	BACK OF FOOTPATH	300	SINGLE ARM	NOT APPLICABLE	POLE MOUNTED	URBIS	AXIA 2 S1	WOODEN PO	WOOD	5	NOT APPLICABI	Not Applicable
46100290	CHERRY LANE	Wootton Parish	508523.11	415898.48	4	7003	00185621	01/04/1980 00:00	4	4	LESS THAN 30MPH	BACK OF FOOTPATH	300	SINGLE ARM	NOT APPLICABLE	POLE MOUNTED	URBIS	AXIA 2 S1	WOODEN PO	WOOD	5	NOT APPLICABI	Not Applicable
46100290	CHERRY LANE	Wootton Parish	508525.21	415873.32	5	7004	00185622	01/04/1980 00:00	4	4	LESS THAN 30MPH	BACK OF FOOTPATH	300	SINGLE ARM	NOT APPLICABLE	POLE MOUNTED	URBIS	AXIA 2 S1	WOODEN PO	WOOD	5	NOT APPLICABI	Not Applicable
46100290	CHERRY LANE	Wootton Parish	508530.46	415833.1	6	7005	00185623	01/04/1980 00:00	4	4	LESS THAN 30MPH	BACK OF FOOTPATH	300	SINGLE ARM	NOT APPLICABLE	POLE MOUNTED	URBIS	AXIA 2 S1	WOODEN PO	WOOD	5	NOT APPLICABI	Not Applicable
46100290	CHERRY LANE	Wootton Parish	508534.44	415781.69	7FP	7006	00185624	25/01/2024 00:00	4	4	LESS THAN 30MPH	VERGE	0	POST TOP	NOT APPLICABLE	RIGID COLUMN	URBIS	AXIA 2 S1	MALLATITE	TUBULAR STEEL	6	GALVANISED	TUBULAR
46100290	CHERRY LANE	Wootton Parish	508539.18	415737.31	8	7007	00185625	25/01/2024 00:00	4	4	LESS THAN 30MPH	VERGE	0	POST TOP	NOT APPLICABLE	RIGID COLUMN	URBIS	AXIA 2 S1	MALLATITE	TUBULAR STEEL	6	GALVANISED	TUBULAR
46100290	CHERRY LANE	Wootton Parish	508540.97	415705.88	9	7008	00185626	25/01/2024 00:00	4	4	LESS THAN 30MPH	VERGE	0	POST TOP	NOT APPLICABLE	RIGID COLUMN	URBIS	AXIA 2 S1	MALLATITE	TUBULAR STEEL	5	GALVANISED	TUBULAR
46100291	CHERRY MOUNT	Bottesford Parish	490049.93	407544.29	1	7000	00185629	20/09/2019 00:00	3	1	LESS THAN 30MPH	BACK OF FOOTPATH	0	POST TOP	NOT APPLICABLE	RIGID COLUMN	URBIS	AXIA 2 S1	MALLATITE	TUBULAR STEEL	6	GALVANISED	TUBULAR
46100291	CHERRY MOUNT	Bottesford Parish	490038.9	407565.26	2	7001	00185630	20/09/2019 00:00	3	1	LESS THAN 30MPH	BACK OF FOOTPATH	0	POST TOP	NOT APPLICABLE	RIGID COLUMN	URBIS	AXIA 2 S1	MALLATITE	TUBULAR STEEL	6	GALVANISED	TUBULAR
46100292	CHERRY TREE AVENUE	Brigg Parish	499883.15	407629.35	1	7000	00185631	01/04/1980 00:00	2	3	LESS THAN 30MPH	VERGE	0	POST TOP	LIGHT GREY	RIGID COLUMN	URBIS	AXIA 2 S1	PETITJEAN	SHEET STEEL	5	PAINTED	NIDD
46100292	CHERRY TREE AVENUE	Brigg Parish	499848.02	407636.46	2	7001	00185632	22/11/2019 00:00	2	3	LESS THAN 30MPH	BACK OF FOOTPATH	0	POST TOP	NOT APPLICABLE	RIGID COLUMN	URBIS	AXIA 2 S1	MALLATITE	TUBULAR STEEL	6	GALVANISED	TUBULAR
46100292	CHERRY TREE AVENUE	Brigg Parish	499817.7	407642.25	3	7002	00185633	22/11/2019 00:00	2	3	LESS THAN 30MPH	BACK OF FOOTPATH	0	POST TOP	NOT APPLICABLE	RIGID COLUMN	URBIS	AXIA 2 S1	MALLATITE	TUBULAR STEEL	6	GALVANISED	TUBULAR
46100293	CHESNEY DRIVE	Bottesford Parish	489391.28	407246.36	1	7000	00185634	01/07/2019 00:00	3	1	LESS THAN 30MPH	VERGE	0	POST TOP	NOT APPLICABLE	RIGID COLUMN	URBIS	AXIA 2 S1	MALLATITE	TUBULAR STEEL	6	GALVANISED	TUBULAR
46100293	CHESNEY DRIVE	Bottesford Parish	489379.94	407282.06	2	7001	00185635	01/04/1980 00:00	3	1	LESS THAN 30MPH	VERGE	0	POST TOP	NOT APPLICABLE	RIGID COLUMN	URBIS	AXIA 2 S1	PETITJEAN	SHEET STEEL	5	GALVANISED	NIDD
46100293	CHESNEY DRIVE	Bottesford Parish	489378.04	407314.13	3	7002	00185636	01/04/2012 00:00	3	1	LESS THAN 30MPH	BACK OF FOOTPATH	0	POST TOP	NOT APPLICABLE	RIGID COLUMN	URBIS	AXIA 2 S1	MALLATITE	TUBULAR STEEL	6	GALVANISED	TUBULAR
46100293	CHESNEY DRIVE	Bottesford Parish	489365.41	407330.79	4	7003	00185637	01/07/2019 00:00	3	1	LESS THAN 30MPH	BACK OF FOOTPATH	0	POST TOP	NOT APPLICABLE	RIGID COLUMN	URBIS	AXIA 2 S1	MALLATITE	TUBULAR STEEL	6	GALVANISED	TUBULAR
46100293	CHESNEY DRIVE	Bottesford Parish	489321.6	407335.25	5	7004	00185638	01/07/2019 00:00	3	1	LESS THAN 30MPH	BACK OF FOOTPATH	0	POST TOP	NOT APPLICABLE	RIGID COLUMN	URBIS	AXIA 2 S1	MALLATITE	TUBULAR STEEL	6	GALVANISED	TUBULAR
46100293	CHESNEY DRIVE	Bottesford Parish	489290.77	407326.08	6	7005	00185639	01/04/2008 00:00	3	1	LESS THAN 30MPH	BACK OF FOOTPATH	0	POST TOP	NOT APPLICABLE	RIGID COLUMN	URBIS	AXIA 2 S1	BRITISH STEE	TUBULAR STEEL	6	GALVANISED	ASH
46100293	CHESNEY DRIVE	Bottesford Parish	489277.33	407310.86	7	7006	00185640	01/07/2019 00:00	3	1	LESS THAN 30MPH	VERGE	0	POST TOP	NOT APPLICABLE	RIGID COLUMN	URBIS	AXIA 2 S1	MALLATITE	TUBULAR STEEL	6	GALVANISED	TUBULAR
46100293	CHESNEY DRIVE	Bottesford Parish	489232.28	407304.41	8	7007	00185641	01/07/2019 00:00	3	1	LESS THAN 30MPH	BACK OF FOOTPATH	0	POST TOP	NOT APPLICABLE	RIGID COLUMN	URBIS	AXIA 2 S1	MALLATITE	TUBULAR STEEL	6	GALVANISED	TUBULAR
46100293	CHESNEY DRIVE	Bottesford Parish	489193.64	407291.78	9	7008	00185642	01/07/2019 00:00	3	1	LESS THAN 30MPH	BACK OF FOOTPATH	0	POST TOP	NOT APPLICABLE	RIGID COLUMN	URBIS	AXIA 2 S1	MALLATITE	TUBULAR STEEL	6	GALVANISED	TUBULAR
46100294	CHESSWICK AVENUE	Keadby with Althorpe Parish	483678.16	410800.12	1	7000	00185643	01/04/1985 00:00	4	3	LESS THAN 30MPH	BACK OF FOOTPATH	300	SINGLE ARM	NOT APPLICABLE	RIGID COLUMN	URBIS	AXIA 2 S1	PETITJEAN	SHEET STEEL	5	GALVANISED	DAER
46100294	CHESSWICK AVENUE	Keadby with Althorpe Parish	483404.74	410811.76	10	7009	00185652	01/04/1985 00:00	4	3	LESS THAN 30MPH	VERGE	300	SINGLE ARM	NOT APPLICABLE	RIGID COLUMN	URBIS	AXIA 2 S1	PETITJEAN	SHEET STEEL	5	GALVANISED	DAER
46100294	CHESSWICK AVENUE	Keadby with Althorpe Parish	483649.42	410790.54	2	7001	00185644	01/04/1985 00:00	4	3	LESS THAN 30MPH	BACK OF FOOTPATH	300	SINGLE ARM	NOT APPLICABLE	RIGID COLUMN	URBIS	AXIA 2 S1	PETITJEAN	SHEET STEEL	5	GALVANISED	DAER
46100294	CHESSWICK AVENUE	Keadby with Althorpe Parish	483620.03	410789.13	3	7002	00185645	13/11/2020 00:00	4	3	LESS THAN 30MPH	BACK OF FOOTPATH	0	POST TOP	NOT APPLICABLE	RIGID COLUMN	URBIS	AXIA 2 S1	MALLATITE	TUBULAR STEEL	6	GALVANISED	TUBULAR
46100294	CHESSWICK AVENUE	Keadby with Althorpe Parish	483591.03	410790.19	4	7003	00185646	01/04/1985 00:00	4	3	LESS THAN 30MPH	VERGE	300	SINGLE ARM	NOT APPLICABLE	RIGID COLUMN	URBIS	AXIA 2 S1	PETITJEAN	SHEET STEEL	5	GALVANISED	DAER
46100294	CHESSWICK AVENUE	Keadby with Althorpe Parish	483558.64	410794.43	5	7004	00185647	01/04/1985 00:00	4	3	LESS THAN 30MPH	VERGE	300	SINGLE ARM	NOT APPLICABLE	RIGID COLUMN	URBIS	AXIA 2 S1	PETITJEAN	SHEET STEEL	5	GALVANISED	DAER
46100294	CHESSWICK AVENUE	Keadby with Althorpe Parish	483522.88	410798.29	6	7005	00185648	01/04/1985 00:00	4	3	LESS THAN 30MPH	VERGE	300	SINGLE ARM	NOT APPLICABLE	RIGID COLUMN	URBIS	AXIA 2 S1	PETITJEAN	SHEET STEEL	5	GALVANISED	DAER
46100294	CHESSWICK AVENUE	Keadby with Althorpe Parish	483490	410801.76	7	7006	00185649	01/04/1985 00:00	4	3	LESS THAN 30MPH	VERGE	300	SINGLE ARM	NOT APPLICABLE	RIGID COLUMN	URBIS	AXIA 2 S1	PETITJEAN	SHEET STEEL	5	GALVANISED	DAER
46100294	CHESSWICK AVENUE	Keadby with Althorpe Parish	483469.06	410804.51	8	7007	00185650	01/04/1985 00:00	4	3	LESS THAN 30MPH	VERGE	300	SINGLE ARM	NOT APPLICABLE	RIGID COLUMN	URBIS	AXIA 2 S1	PETITJEAN	SHEET STEEL	5	GALVANISED	DAER
46100294	CHESSWICK AVENUE	Keadby with Althorpe Parish	483433.73	410807.77	9	7008	00185651	01/04/1985 00:00	4	3	LESS THAN 30MPH	VERGE	300	SINGLE ARM	NOT APPLICABLE	RIGID COLUMN	URBIS	AXIA 2 S1	PETITJEAN	SHEET STEEL	5	GALVANISED	DAER
46100295	CHESSWICK CRESCENT	Keadby with Althorpe Parish	483370.39	410814.78	1	7000	00185653	01/04/1985 00:00	4	3	LESS THAN 30MPH	VERGE	300	SINGLE ARM	NOT APPLICABLE	RIGID COLUMN	URBIS	AXIA 2 S1	PETITJEAN	SHEET STEEL	5	GALVANISED	DAER
46100295	CHESSWICK CRESCENT	Keadby with Althorpe Parish	483346.71	410821.21	2	7001	00185654	01/04/2008 00:00	4	3	LESS THAN 30MPH	VERGE	0	POST TOP	NOT APPLICABLE	RIGID COLUMN	URBIS	AXIA 2 S1	PETITJEAN	SHEET STEEL	6	GALVANISED	DAER
46100295	CHESSWICK CRESCENT	Keadby with Althorpe Parish	483316.27	410835.82	3	7002	00185655	01/04/2008 00:00	4	3	LESS THAN 30MPH	VERGE	0	POST TOP	NOT APPLICABLE	RIGID COLUMN	URBIS	AXIA 2 S1	PETITJEAN	SHEET STEEL	6	GALVANISED	DAER
46100295	CHESSWICK CRESCENT	Keadby with Althorpe Parish	483289.3	410858.6	4	7003	00185656	01/04/1985 00:00	4	3	LESS THAN 30MPH	VERGE	300	SINGLE ARM	NOT APPLICABLE	RIGID COLUMN	URBIS	AXIA 2 S1	PETITJEAN	SHEET STEEL	5	GALVANISED	DAER
46100295	CHESSWICK CRESCENT	Keadby with Althorpe Parish	483271.83	410880.37	5	7004	00185657	01/04/1985 00:00	4	3	LESS THAN 30MPH	VERGE	300	SINGLE ARM	NOT APPLICABLE	RIGID COLUMN	URBIS	AXIA 2 S1	PETITJEAN	SHEET STEEL	5	GALVANISED	DAER
46100295	CHESSWICK CRESCENT	Keadby with Althorpe Parish	483258.79	410907.78	6	7005	00185658	01/04/1985 00:00	4	3	LESS THAN 30MPH	VERGE	300	SINGLE ARM	NOT APPLICABLE	RIGID COLUMN	URBIS	AXIA 2 S1	PETITJEAN	SHEET STEEL	5	GALVANISED	DAER
46100295	CHESSWICK CRESCENT	Keadby with Althorpe Parish	483248.4	410943.08	7	7006	00185659	01/04/1985 00:00	4	3	LESS THAN 30MPH	VERGE	300	SINGLE ARM	NOT APPLICABLE	RIGID COLUMN	URBIS	AXIA 2 S1	PETITJEAN	SHEET STEEL	5	GALVANISED	DAER
46100295	CHESSWICK CRESCENT	Keadby with Althorpe Parish	483240.26	410977.66	8	7007	00185660	01/04/1985 00:00	4	3	LESS THAN 30MPH	VERGE	300	SINGLE ARM	NOT APPLICABLE	RIGID COLUMN	URBIS	AXIA 2 S1	PETITJEAN	SHEET STEEL	5	GALVANISED	DAER
46100295	CHESSWICK CRESCENT	Keadby with Althorpe Parish	483233.85	411003.31	9	7008	00185661	01/04/2008 00:00	4	3	LESS THAN 30MPH	VERGE	0	POST TOP	NOT APPLICABLE	RIGID COLUMN	URBIS	AXIA 2 S1	BRITISH STEE	TUBULAR STEEL	6	GALVANISED	ASH
46100296	CHESTERFIELD ROAD	Gunness Parish	486909.55	410758.16	1	7000	00185662	01/04/1980 00:00	2	2	LESS THAN 30MPH	VERGE	0	POST TOP	LIGHT GREY	RIGID COLUMN	URBIS	AXIA 2 S1	PETITJEAN	SHEET STEEL	5	PAINTED	NIDD
46100296	CHESTERFIELD ROAD	Gunness Parish	486715	410717	10	7009	04200298	01/04/1980 00:00	2	2	LESS THAN 30MPH	VERGE	0	POST TOP	LIGHT GREY	RIGID COLUMN	URBIS	AXIA 2 S1	PETITJEAN	SHEET STEEL	5	PAINTED	NIDD
46100296	CHESTERFIELD ROAD	Gunness Parish	486700	410722	11	7010	04200299	01/04/1980 00:00	2	2	LESS THAN 30MPH	VERGE	0	POST TOP	LIGHT GREY	RIGID COLUMN	URBIS	AXIA 2 S1	PETITJEAN	SHEET STEEL	5	PAINTED	NIDD
46100296	CHESTERFIELD ROAD	Gunness Parish	486899.09	410729.97	2	7001	00185663	01/04/1980 00:00	2	2	LESS THAN 30MPH	BACK OF FOOTPATH	0	POST TOP	LIGHT GREY	RIGID COLUMN	URBIS	AXIA 2 S1	PETITJEAN	SHEET STEEL	5	PAINTED	NIDD
46100296	CHESTERFIELD ROAD	Gunness Parish	486882.43	410709.27	3	7002	00185664	01/04/1980 00:00	2	2	LESS THAN 30MPH	BACK OF FOOTPATH	0	POST TOP	NOT APPLICABLE	RIGID COLUMN	URBIS	AXIA 2 S1	PETITJEAN	SHEET STEEL	5	GALVANISED	NIDD
46100296	CHESTERFIELD ROAD	Gunness Parish	486852.86	410717.2	4	7003	00185665	01/04/1980 00:00	2	2	LESS THAN 30MPH	BACK OF FOOTPATH	0	POST TOP	LIGHT GREY	RIGID COLUMN	URBIS	AXIA 2 S1	PETITJEAN	SHEET STEEL	5	PAINTED	NIDD
46100296	CHESTERFIELD ROAD	Gunness Parish	486840.22	410708.86	5	7004	00185666	07/09/2023 00:00	2	2	LESS THAN 30MPH	BACK OF FOOTPATH	0	POST TOP	NOT APPLICABLE	RIGID COLUMN	URBIS	AXIA 2 S1	MALLATITE	TUBULAR STEEL	6	GALVANISED	TUBULAR
46100296	CHESTERFIELD ROAD	Gunness Parish	486820.53	410719.8	6	7005	00185667	01/04/1980 00:00	2	2	LESS THAN 30MPH	BACK OF FOOTPATH	0	POST TOP	LIGHT GREY	RIGID COLUMN	URBIS	AXIA 2 S1	PETITJEAN	SHEET STEEL	5	PAINTED	NIDD
46100296	CHESTERFIELD ROAD	Gunness Parish	486795.47	410711.07	7	7006	00185668	01/04/1980 00:00	2	2	LESS THAN 30MPH	BACK OF FOOTPATH	0	POST TOP	LIGHT GREY	RIGID COLUMN	URBIS	AXIA 2 S1	PETITJEAN	SHEET STEEL	5	PAINTED	NIDD
46100296	CHESTERFIELD ROAD	Gunness Parish	486753.98	410713.97	8	7007	00185669	01/04/1980 00:00	2	2	LESS THAN 30MPH	BACK OF FOOTPATH	0	POST TOP	LIGHT GREY	RIGID COLUMN	URBIS	AXIA 2 S1	PETITJEAN	SHEET STEEL	5	PAINTED	NIDD
46100296	CHESTERFIELD ROAD	Gunness Parish	486730.84	410725.01	9	7008	00185670	01/04/1980 00:00	2	2	LESS THAN 30MPH	BACK OF FOOTPATH	0	POST TOP	LIGHT GREY	RIGID COLUMN	URBIS	AX

46100320	CHURCH SQUARE	Scunthorpe	489922.46	411503.83	7	7004	00185819	01/04/2022 00:00	4	4	NOT ON A ROAD	OTHER	1000	SINGLE ARM	NOT APPLICABLE	RIGID COLUMN	URBIS	YOA MIDI	MALLATITE	ALUMINIUM	8	ALUMINIUM	TUBULAR
46100320	CHURCH SQUARE	Scunthorpe	489941.53	411477.52	8	7005	00185820	01/04/2000 00:00	4	4	NOT ON A ROAD	OTHER	1000	DOUBLE ARM	SILVER	RIGID COLUMN	URBIS	SATURN	FABRIKAT	TUBULAR STEEL	8	PAINTED	STEPPED TUBULAR
46100320	CHURCH SQUARE	Scunthorpe	489916.62	411456.95	9	7006	00185821	01/04/2000 00:00	4	4	NOT ON A ROAD	OTHER	1000	DOUBLE ARM	SILVER	RIGID COLUMN	URBIS	SATURN	FABRIKAT	TUBULAR STEEL	8	PAINTED	STEPPED TUBULAR
46100321	CHURCH STREET	Amcotts Parish	485743	414186	1	7002	00185833	01/04/1993 00:00	4	2	LESS THAN 30MPH	BACK OF FOOTPATH	800	SINGLE ARM	NOT APPLICABLE	RIGID COLUMN	URBIS	AXIA 2 S1	PETITJEAN	SHEET STEEL	6	GALVANISED	DAER
46100321	CHURCH STREET	Amcotts Parish	485494.49	414137.3	10	7011	00185842	01/04/1993 00:00	4	2	LESS THAN 30MPH	BACK OF FOOTPATH	800	SINGLE ARM	NOT APPLICABLE	RIGID COLUMN	URBIS	AXIA 2 S1	PETITJEAN	SHEET STEEL	6	GALVANISED	DAER
46100321	CHURCH STREET	Amcotts Parish	485458.26	414126.4	11	7012	00185843	01/04/1993 00:00	4	2	LESS THAN 30MPH	BACK OF FOOTPATH	800	SINGLE ARM	NOT APPLICABLE	RIGID COLUMN	URBIS	AXIA 2 S1	PETITJEAN	SHEET STEEL	6	GALVANISED	DAER
46100321	CHURCH STREET	Amcotts Parish	485425.63	414133.02	12	7000	00185831	01/04/1993 00:00	4	2	LESS THAN 30MPH	BACK OF FOOTPATH	800	SINGLE ARM	NOT APPLICABLE	RIGID COLUMN	URBIS	AXIA 2 S1	PETITJEAN	SHEET STEEL	6	GALVANISED	DAER
46100321	CHURCH STREET	Amcotts Parish	485395.42	414130.68	13	7001	00185832	01/04/1993 00:00	4	2	LESS THAN 30MPH	BACK OF FOOTPATH	800	SINGLE ARM	NOT APPLICABLE	RIGID COLUMN	URBIS	AXIA 2 S1	PETITJEAN	SHEET STEEL	6	GALVANISED	DAER
46100321	CHURCH STREET	Amcotts Parish	485717.45	414191.77	2	7003	00185834	01/04/1993 00:00	4	2	LESS THAN 30MPH	BACK OF FOOTPATH	800	SINGLE ARM	NOT APPLICABLE	RIGID COLUMN	URBIS	AXIA 2 S1	PETITJEAN	SHEET STEEL	6	GALVANISED	DAER
46100321	CHURCH STREET	Amcotts Parish	485692.18	414190.15	3	7004	00185835	01/04/1993 00:00	4	2	LESS THAN 30MPH	BACK OF FOOTPATH	800	SINGLE ARM	NOT APPLICABLE	RIGID COLUMN	URBIS	AXIA 2 S1	PETITJEAN	SHEET STEEL	6	GALVANISED	DAER
46100321	CHURCH STREET	Amcotts Parish	485669.7	414178.12	4	7005	00185836	01/04/1993 00:00	4	2	LESS THAN 30MPH	BACK OF FOOTPATH	800	SINGLE ARM	NOT APPLICABLE	RIGID COLUMN	URBIS	AXIA 2 S1	PETITJEAN	SHEET STEEL	6	GALVANISED	DAER
46100321	CHURCH STREET	Amcotts Parish	485631.62	414179.6	5	7006	00185837	01/04/1993 00:00	4	2	LESS THAN 30MPH	BACK OF FOOTPATH	800	SINGLE ARM	NOT APPLICABLE	RIGID COLUMN	URBIS	AXIA 2 S1	PETITJEAN	SHEET STEEL	6	GALVANISED	DAER
46100321	CHURCH STREET	Amcotts Parish	485608.85	414163.16	6	7007	00185838	01/04/1993 00:00	4	2	LESS THAN 30MPH	BACK OF FOOTPATH	800	SINGLE ARM	NOT APPLICABLE	RIGID COLUMN	URBIS	AXIA 2 S1	PETITJEAN	SHEET STEEL	6	GALVANISED	DAER
46100321	CHURCH STREET	Amcotts Parish	485580.31	414162.4	7	7008	00185839	01/04/1993 00:00	4	2	LESS THAN 30MPH	BACK OF FOOTPATH	800	SINGLE ARM	NOT APPLICABLE	RIGID COLUMN	URBIS	AXIA 2 S1	PETITJEAN	SHEET STEEL	6	GALVANISED	DAER
46100321	CHURCH STREET	Amcotts Parish	485548.16	414149.06	8	7009	00185840	01/04/1993 00:00	4	2	LESS THAN 30MPH	BACK OF FOOTPATH	800	SINGLE ARM	NOT APPLICABLE	RIGID COLUMN	URBIS	AXIA 2 S1	PETITJEAN	SHEET STEEL	6	GALVANISED	DAER
46100321	CHURCH STREET	Amcotts Parish	485519.26	414140.63	9	7010	00185841	01/04/1993 00:00	4	2	LESS THAN 30MPH	BACK OF FOOTPATH	800	SINGLE ARM	NOT APPLICABLE	RIGID COLUMN	URBIS	AXIA 2 S1	PETITJEAN	SHEET STEEL	6	GALVANISED	DAER
46100322	CHURCH STREET	Crowle Parish	477249.77	412931.89	1	7000	00185844	22/06/2018 00:00	5	1	LESS THAN 30MPH	BACK OF FOOTPATH	0	POST TOP	NOT APPLICABLE	RIGID COLUMN	URBIS	AXIA 2 S1	MALLATITE	TUBULAR STEEL	6	GALVANISED	TUBULAR
46100322	CHURCH STREET	Crowle Parish	477216.56	412935.85	2	7001	00185845	01/04/1986 00:00	5	1	LESS THAN 30MPH	BACK OF FOOTPATH	300	SINGLE ARM	NOT APPLICABLE	RIGID COLUMN	URBIS	AXIA 2 S1	PETITJEAN	SHEET STEEL	5	GALVANISED	DAER
46100322	CHURCH STREET	Crowle Parish	477172.42	412947.54	3	7002	00185846	01/04/1986 00:00	5	1	LESS THAN 30MPH	VERGE	300	SINGLE ARM	NOT APPLICABLE	RIGID COLUMN	URBIS	AXIA 2 S1	PETITJEAN	SHEET STEEL	5	GALVANISED	DAER
46100323	CHURCH STREET	Epworth Parish	478276.85	403867.71	1	7000	00185847	01/04/1980 00:00	5	3	LESS THAN 30MPH	BACK OF FOOTPATH	0	POST TOP	NOT APPLICABLE	RIGID COLUMN	URBIS	AXIA 2 S1	MALLATITE	TUBULAR STEEL	5	GALVANISED	STEPPED TUBULAR
46100323	CHURCH STREET	Epworth Parish	478318.58	403868.14	2	7001	00185848	01/04/1989 00:00	5	3	LESS THAN 30MPH	BACK OF FOOTPATH	0	POST TOP	NOT APPLICABLE	RIGID COLUMN	URBIS	AXIA 2 S1	PETITJEAN	SHEET STEEL	5	GALVANISED	NIDD
46100323	CHURCH STREET	Epworth Parish	478340	403888	3	7002	04200396	14/08/2019 00:00	5	3	NOT ON A ROAD	VERGE	500	DOUBLE ARM	BLACK	RIGID COLUMN	URBIS	ALBANY	VALMONT ST	TUBULAR STEEL	8	PAINTED	CHATSWORTH
46100323	CHURCH STREET	Epworth Parish	478334	403903	4	7003	04200397	14/08/2019 00:00	5	3	NOT ON A ROAD	VERGE	500	DOUBLE ARM	BLACK	RIGID COLUMN	URBIS	ALBANY	VALMONT ST	TUBULAR STEEL	8	PAINTED	CHATSWORTH
46100323	CHURCH STREET	Epworth Parish	478320	403915	5	7004	04200398	10/08/2019 00:00	5	3	NOT ON A ROAD	VERGE	500	SINGLE ARM	BLACK	RIGID COLUMN	URBIS	ALBANY	VALMONT ST	TUBULAR STEEL	8	PAINTED	CHATSWORTH
46100323	CHURCH STREET	Epworth Parish	478326	403936	6	7005	04200399	10/08/2019 00:00	5	3	NOT ON A ROAD	VERGE	500	SINGLE ARM	BLACK	RIGID COLUMN	URBIS	ALBANY	VALMONT ST	TUBULAR STEEL	8	PAINTED	CHATSWORTH
46100323	CHURCH STREET	Epworth Parish	478307	403936	7	7006	04200400	10/08/2019 00:00	5	3	NOT ON A ROAD	VERGE	500	SINGLE ARM	BLACK	RIGID COLUMN	URBIS	ALBANY	VALMONT ST	TUBULAR STEEL	8	PAINTED	CHATSWORTH
46100324	CHURCH STREET	Goxhill Parish	510125.18	421350.93	1	7002	04200541	19/11/2020 00:00	4	4	LESS THAN 30MPH	BACK OF FOOTPATH	0	POST TOP	NOT APPLICABLE	RIGID COLUMN	URBIS	AXIA 2 S1	MALLATITE	TUBULAR STEEL	6	GALVANISED	TUBULAR
46100324	CHURCH STREET	Goxhill Parish	510152.74	421298.2	2	7000	00185849	01/04/1980 00:00	4	4	LESS THAN 30MPH	BACK OF FOOTPATH	300	SINGLE ARM	NOT APPLICABLE	POLE MOUNTED	URBIS	AXIA 2 S1	WOODEN PO	WOOD	5	NOT APPLICABI	Not Applicable
46100324	CHURCH STREET	Goxhill Parish	510186.23	421267.73	3	7001	00185850	01/04/1980 00:00	4	4	LESS THAN 30MPH	BACK OF FOOTPATH	300	SINGLE ARM	NOT APPLICABLE	POLE MOUNTED	URBIS	AXIA 2 S1	WOODEN PO	WOOD	5	NOT APPLICABI	Not Applicable
46100325	CHURCH STREET	Haxey Parish	476442.42	399856.5	1	7000	00185851	01/04/1998 00:00	6	2	LESS THAN 30MPH	BACK OF FOOTPATH	800	SINGLE ARM	BLACK	RIGID COLUMN	URBIS	ALBANY	URBIS	TUBULAR STEEL	6	PAINTED	CHATSWORTH
46100325	CHURCH STREET	Haxey Parish	476719.83	399876.62	10	7009	00185860	03/05/2018 00:00	6	2	LESS THAN 30MPH	BACK OF FOOTPATH	0	POST TOP	NOT APPLICABLE	RIGID COLUMN	URBIS	AXIA 2 S1	VALMONT ST	TUBULAR STEEL	6	GALVANISED	TUBULAR
46100325	CHURCH STREET	Haxey Parish	476762.98	399887.21	11	7010	04200262	01/04/2000 00:00	6	2	LESS THAN 30MPH	BACK OF FOOTPATH	300	SINGLE ARM	NOT APPLICABLE	RIGID COLUMN	URBIS	AXIA 2 S1	MALLATITE	TUBULAR STEEL	5	GALVANISED	TUBULAR
46100325	CHURCH STREET	Haxey Parish	476469.67	399858.58	2	7001	00185852	01/04/1998 00:00	6	2	LESS THAN 30MPH	BACK OF FOOTPATH	800	SINGLE ARM	BLACK	RIGID COLUMN	URBIS	ALBANY	URBIS	TUBULAR STEEL	6	PAINTED	CHATSWORTH
46100325	CHURCH STREET	Haxey Parish	476496.67	399861.51	3	7002	00185853	01/04/1998 00:00	6	2	LESS THAN 30MPH	BACK OF FOOTPATH	800	SINGLE ARM	BLACK	RIGID COLUMN	URBIS	ALBANY	URBIS	TUBULAR STEEL	6	PAINTED	CHATSWORTH
46100325	CHURCH STREET	Haxey Parish	476522.96	399857.57	4	7003	00185854	01/04/1998 00:00	6	2	LESS THAN 30MPH	BACK OF FOOTPATH	800	SINGLE ARM	BLACK	RIGID COLUMN	URBIS	ALBANY	URBIS	TUBULAR STEEL	6	PAINTED	CHATSWORTH
46100325	CHURCH STREET	Haxey Parish	476548.98	399846.84	5	7004	00185855	01/04/1970 00:00	6	2	LESS THAN 30MPH	VERGE	0	POST TOP	NOT APPLICABLE	RIGID COLUMN	URBIS	PILZEO 16 LED 3.19 KLM	HEMCOL	TUBULAR STEEL	5	GALVANISED	OTHER
46100325	CHURCH STREET	Haxey Parish	476552.23	399855.95	6	7005	00185856	01/04/1985 00:00	6	2	LESS THAN 30MPH	BACK OF FOOTPATH	300	SINGLE ARM	NOT APPLICABLE	RIGID COLUMN	URBIS	AXIA 2 S1	MALLATITE	TUBULAR STEEL	5	GALVANISED	STEPPED TUBULAR
46100325	CHURCH STREET	Haxey Parish	476600.73	399857.01	7	7006	00185857	03/05/2018 00:00	6	2	LESS THAN 30MPH	BACK OF FOOTPATH	0	POST TOP	NOT APPLICABLE	RIGID COLUMN	URBIS	AXIA 2 S1	VALMONT ST	TUBULAR STEEL	6	GALVANISED	TUBULAR
46100325	CHURCH STREET	Haxey Parish	476643.68	399862.84	8	7007	00185858	01/04/1985 00:00	6	2	LESS THAN 30MPH	BACK OF FOOTPATH	800	SINGLE ARM	NOT APPLICABLE	RIGID COLUMN	URBIS	AXIA 2 S1	PETITJEAN	SHEET STEEL	5	GALVANISED	DAER
46100325	CHURCH STREET	Haxey Parish	476680.82	399858.62	9	7008	00185859	01/04/2000 00:00	6	2	LESS THAN 30MPH	BACK OF FOOTPATH	0	POST TOP	NOT APPLICABLE	RIGID COLUMN	URBIS	AXIA 2 S1	MALLATITE	TUBULAR STEEL	6	GALVANISED	TUBULAR
46100326	CHURCH STREET	Hibaldstow Parish	497779.1	402523.37	1	7000	00185861	01/04/1982 00:00	1	4	LESS THAN 30MPH	BACK OF FOOTPATH	1250	SINGLE ARM	MID GREY	RIGID COLUMN	URBIS	AXIA 2 S1	PETITJEAN	SHEET STEEL	8	PAINTED	THAMES
46100326	CHURCH STREET	Hibaldstow Parish	497814.4	402543.57	2	7001	00185862	01/04/1980 00:00	1	4	LESS THAN 30MPH	BACK OF FOOTPATH	300	SINGLE ARM	NOT APPLICABLE	RIGID COLUMN	URBIS	AXIA 2 S1	PETITJEAN	SHEET STEEL	5	GALVANISED	DAER
46100326	CHURCH STREET	Hibaldstow Parish	497851.4	402562.54	3	7002	00185863	01/04/2010 00:00	1	4	LESS THAN 30MPH	BACK OF FOOTPATH	0	POST TOP	NOT APPLICABLE	RIGID COLUMN	URBIS	AXIA 2 S1	MALLATITE	TUBULAR STEEL	6	GALVANISED	TUBULAR
46100326	CHURCH STREET	Hibaldstow Parish	497879.87	402576.73	4	7003	00185864	01/04/2010 00:00	1	4	LESS THAN 30MPH	BACK OF FOOTPATH	0	POST TOP	NOT APPLICABLE	RIGID COLUMN	URBIS	AXIA 2 S1	MALLATITE	TUBULAR STEEL	6	GALVANISED	TUBULAR
46100326	CHURCH STREET	Hibaldstow Parish	497917.13	402589.24	5	7004	00185865	11/10/2019 00:00	1	4	LESS THAN 30MPH	BACK OF FOOTPATH	0	POST TOP	NOT APPLICABLE	RIGID COLUMN	URBIS	AXIA 2 S1	MALLATITE	TUBULAR STEEL	6	GALVANISED	TUBULAR
46100326	CHURCH STREET	Hibaldstow Parish	497911.87	402639.87	6	7005	00185866	01/04/1980 00:00	1	4	LESS THAN 30MPH	ON POLE	500	SINGLE ARM	NOT APPLICABLE	POLE MOUNTED	URBIS	AXIA 2 S1	WOODEN PO	WOOD	5	NOT APPLICABI	Not Applicable
46100326	CHURCH STREET	Hibaldstow Parish	497942.87	402649.39	7	7006	00185867	01/04/2012 00:00	1	4	LESS THAN 30MPH	VERGE	0	POST TOP	NOT APPLICABLE	RIGID COLUMN	URBIS	AXIA 2 S1	MALLATITE	TUBULAR STEEL	6	GALVANISED	TUBULAR
46100327	CHURCH STREET	Messingham Parish	489260.95	404618.19	1	7000	00185868	01/04/2008 00:00	4	1	LESS THAN 30MPH	BACK OF FOOTPATH	0	POST TOP	NOT APPLICABLE	RIGID COLUMN	URBIS	AXIA 2 S1	BRITISH STEE	TUBULAR STEEL	6	GALVANISED	ASH
46100327	CHURCH STREET	Messingham Parish	489214.77	404616.41	2	7001	00185869	01/04/2008 00:00	4	1	LESS THAN 30MPH	BACK OF FOOTPATH	0	POST TOP	NOT APPLICABLE	RIGID COLUMN	URBIS	AXIA 2 S1	BRITISH STEE	TUBULAR STEEL	6	GALVANISED	ASH
46100327	CHURCH STREET	Messingham Parish	489165.06	404614.19	3	7002	00185870	01/04/2010 00:00	4	1	LESS THAN 30MPH	BACK OF FOOTPATH	0	POST TOP	NOT APPLICABLE	RIGID COLUMN	URBIS	AXIA 2 S1	MALLATITE	TUBULAR STEEL	6	GALVANISED	TUBULAR
46100327	CHURCH STREET	Messingham Parish	489117.76	404614.22	4	7003	00185871	01/04/2010 00:00	4	1	LESS THAN 30MPH	BACK OF FOOTPATH	0	POST TOP	NOT APPLICABLE	RIGID COLUMN	URBIS	AXIA 2 S1	MALLATITE	TUBULAR STEEL	6	GALVANISED	TUBULAR
46100327	CHURCH STREET	Messingham Parish	489088.85	404659.9	5	7004	00185872	01/04/1980 00:00	4	1	LESS THAN 30MPH	ON POLE	500	SINGLE ARM	NOT APPLICABLE	POLE MOUNTED	URBIS	AXIA 2 S1	WOODEN PO	WOOD	5	NOT APPLICABI	Not Applicable
46100327	CHURCH STREET	Messingham Parish	489083.59	404698.91	6	7005	00185873	16/04/2019 00:00	4	1	LESS THAN 30MPH	BACK OF FOOTPATH	0	POST TOP	NOT APPLICABLE	RIGID COLUMN	URBIS	AXIA 2 S1	MALLATITE	TUBULAR STEEL	6	GALVANISED	TUBULAR
46100327	CHURCH STREET	Messingham Parish	489081.84	404739.51	7	7006	00185874	01/04/2010 00:00	4	1	LESS THAN 30MPH	VERGE	0	POST TOP	NOT APPLICABLE	RIGID COLUMN	URBIS	AXIA 2 S1	MALLATITE	TUBULAR STEEL	6	GALVANISED	TUBULAR
46100328	CHURCH STREET	Owston Ferry Parish	480880.21	400311.98	1	7000	00185875	01/04/1993 00:00	6	2	LESS THAN 30MPH	VERGE	800	SINGLE ARM	NOT APPLICABLE	RIGID COLUMN	URBIS	AXIA 2 S1	PETITJEAN	SHEET STEEL	6	GALVANISED	DAER
46100328	CHURCH STREET	Owston Ferry Parish	480644.51	400302.72	10	7009	00185884	01/04/1993 00:00	6	2	LESS THAN 30MPH	VERGE	800	SINGLE ARM	NOT APPLICABLE	RIGID COLUMN	URBIS	AXIA 2 S1	PETITJEAN	SHEET STEEL	6	GALVANISED	DAER
46100328	CHURCH STREET	Owston Ferry Parish	480623.24	400312.46	11	7010	00185885	01/04/1993 00:00	6	2	LESS THAN 30MPH	VERGE	800	SINGLE ARM	NOT APPLICABLE	RIGID COLUMN	URBIS	AXIA 2 S1	PETITJEAN	SHEET STEEL	6	GALVANISED	DAER
46100328	CHURCH STREET	Owston Ferry Parish	480608.99	400318.91	12	7011	00185886	04/10/2018 00:00	6	2	LESS THAN 30MPH	VERGE	0	POST TOP	NOT APPLICABLE	RIGID COLUMN	URBIS	AXIA 2 S1	MALLATITE	TUBULAR STEEL	6	GALVANISED	TUBULAR
46100328	CHURCH STREET	Owston Ferry Parish	480598.67	400347.95	13	7012	00185887	01/04/1980 00:00	6	2	LESS THAN 30MPH	BACK OF FOOTPATH	300	SINGLE ARM	NOT APPLICABLE	RIGID COLUMN	URBIS	AXIA 2 S1	FABRIKAT	TUBULAR STEEL	5	GALVANISED	5M01A
46100328	CHURCH STREET	Owston Ferry Parish	480548.71	400363.76	14	7013	00185888	04/10/2018 00:00	6	2	LESS THAN 30MPH	VERGE	0	POST TOP	NOT APPLICABLE	RIGID COLUMN	URBIS	AXIA 2 S1	MALLATITE	TUBULAR STEEL	6	GALVANISED	TUBULAR
46100328	CHURCH STREET	Owston Ferry Parish	480862.49	400326.55	2	7001	00185876	01/04/1993 00:00	6	2	LESS THAN 30MPH	BACK OF FOOTPATH	800	SINGLE ARM	NOT APPLICABLE	RIGID COLUMN	URBIS	AXIA 2 S1	PETITJEAN	SHEET STEEL	6	GALVANISED	DAER
46100328	CHURCH STREET	Owston Ferry Parish	480831.02	400329.62	3	7002	00185877	01/04/1993 00:00	6	2	LESS THAN 30MPH	BACK OF FOOTPATH	800	SINGLE ARM	NOT APPLICABLE	RIGID COLUMN	URBIS	AXIA 2 S1	PETITJEAN	SHEET STEEL	6	GALVANISED	DAER
46100328	CHURCH STREET	Owston Ferry Parish	480806.99	400320.03	4	7003	00185878	01/04/1993 00:00	6	2	LESS THAN 30MPH	VERGE	800	SINGLE ARM	NOT APPLICABLE	RIGID COLUMN	URBIS	AXIA 2 S1	PETITJEAN	SHEET STEEL	6	GALVANISED	DAER
46100328	CHURCH STREET	Owston Ferry Parish	480778.63	400327.92	5	7004	00185879	01/04/1993 00:00	6	2	LESS THAN 30MPH	BACK OF FOOTPATH	800	SINGLE ARM	NOT APPLICABLE	RIGID COLUMN	URBIS	AXIA 2 S1	PETITJEAN	SHEET STEEL	6	GALVANISED	DAER
46100328	CHURCH STREET	Owston Ferry Parish	480759.54	400315.83	6	7005	00185880	01/04/1993 00:00	6	2	LESS THAN 30MPH	BACK OF FOOTPATH	800	SINGLE ARM	NOT APPLICABLE	RIGID COLUMN	URBIS	AXIA 2 S1	PETITJEAN	SHEET STEEL	6	GALVANISED	DAER
46100328	CHURCH STREET	Owston Ferry Parish	480733.32	400312.74	7	7006	00185881	01/04/1993 00:00	6	2	LESS THAN 30MPH	BACK OF FOOTPATH	800	SINGLE ARM	NOT APPLICABLE	RIGID COLUMN	URBIS	AXIA 2 S1	PETITJEAN	SHEET STEEL	6	GALVANISED	DAER
46100328	CHURCH STREET	Owston Ferry Parish	480699.52	400322.11	8	7007	00185882	01/04/1993 00:00	6	2	LESS THAN 30MPH	BACK OF FOOTPATH	800	SINGLE ARM	NOT APPLICABLE	RIGID COLUMN	URBIS	AXIA 2 S1	PETITJEAN	SHEET STEEL	6	GALVANISED	DAER
46100328	CHURCH STREET	Owston Ferry Parish	480672.38	400305.38	9	7008	00185883	01/04/1993 00:00	6	2	LESS THAN 30MPH	VERGE	800	SINGLE ARM	NOT APPLICABLE	RIGID COLUMN	URBIS	AXIA 2 S1	PETITJEAN	SHEET STEEL	6	GALVANISED	DAER
46100329	CHURCH STREET	Scawby Parish	496818.39	405557.91	1	7000	00185889	01/04/1984 00:00	2	2	LESS THAN 30MPH	FRONT OF FOOTPATH	800	SINGLE ARM	MID GREY	RIGID COLUMN	URBIS	AXIA 2 S1	PETITJEAN	SHEET STEEL	6	PAINTED	DAER
46100329	CHURCH STREET	Scawby Parish	497131.17	405546.97	10	7009	00185898	01/04/1984 00:00	2	2	LESS THAN 30MPH	BACK OF FOOTPATH	800	SINGLE ARM	MID GREY	RIGID COLUMN	URBIS	AXIA 2 S1	PETITJEAN	SHEET STEEL	6	PAINTED	DAER
46100329	CHURCH STREET	Scawby Parish	497171.43	405551.94	11	7010	00185899	01/04/1984 00:00	2	2	LESS THAN 30MPH	BACK OF FOOTPATH	800	SINGLE ARM	MID GREY	RIGID COLUMN	URBIS	AXIA 2 S1	PETITJEAN	SHEET STEEL	6	PAINTED	DAER
46100329	CHURCH STREET	Scawby Parish	497205.2	405558.37	12	7011	00185900	01/04/1977 00:00	2	2	LESS THAN 30MPH	ON POLE	500	SINGLE ARM	NOT APPLICABLE	POLE MOUNTED	URBIS	AXIA 2 S1	WOODEN PO	WOOD	6	NOT APPLICABI	Not Applicable
46100329	CHURCH STREET	Scawby Parish	497261.24	405568.75	13	7012	00185901	01/04/1977 00:00	2	2	GREATER THAN 50MPH	ON POLE	500	SINGLE ARM	NOT APPLICABLE	POLE MOUNTED	URBIS	AXIA 2 S1	WOODEN PO	WOOD	6	NOT APPLICABI	Not Applicable
46100329	CHURCH STREET	Scawby Parish	497313.5	405583.98	14	7013	00185902	01/04/1977 00:00	2	2	GREATER THAN 50MPH	ON POLE	500	SINGLE ARM	NOT APPLICABLE	POLE MOUNTED	URBIS	AXIA 2 S1	WOODEN PO	WOOD	6	NOT APPLICABI	Not Applicable
46100329	CHURCH STREET	Scawby Parish	497360.61	405597.53	15	7014	00185903	01/04/1977 00:00	2	2	GREATER THAN 50MPH	ON POLE	500	SINGLE ARM	NOT APPLICABLE	POLE MOUNTED	URBIS	AXIA 2 S1	WOODEN PO	WOOD	6	NOT APPLICABI	Not Applicable
46100329	CHURCH STREET	Scawby Parish	497412.91	405613.03	16	7015	00185904	01/04/1977 00:00	2	2	GREATER THAN 50MPH	ON POLE	500	SINGLE ARM	NOT APPLICABLE	POLE MOUNTED	URBIS	AXIA 2 S1	WOODEN PO	WOOD	6	NOT APPLICABI	Not Applicable
46100329	CHURCH STREET	Scawby Parish	496854.65	405561.71	2	7001	00185890	01/04/1984 00:00	2	2	LESS THAN 30MPH	FRONT OF FOOTPATH	800	SINGLE ARM	MID GREY	RIGID COLUMN	URBIS	AXIA 2 S1	PETITJEAN	SHEET STEEL	6	PAINTED	DAER
46100329	CHURCH STREET	Scawby Parish	496887.85	405566.04	3	7002	00185891	01/04/1984 00:00	2	2	LESS THAN 30MPH	BACK OF FOOTPATH	800	SINGLE ARM	MID GREY	RIGID COLUMN	URBIS	AXIA 2 S1	PETITJEAN	SHEET STEEL	6	PAINTED	DAER
46100329	CHURCH STREET	Scawby Parish	496924.11	405565.01	4	7003	00185892	03/09/2021 00:00	2	2	LESS THAN 30MPH	BACK OF FOOTPATH	0	POST TOP	NOT APPLICABLE	RIGID COLUMN	URBIS	AXIA 2 S1	MALLATITE	TUBULAR STEEL	6	GALVANISED	TUBULAR
46100329	CHURCH STREET	Scawby Parish	496967.98	405563.44	5	7004	00185893	01/04/1984 00:00	2	2	LESS THAN 30MPH	BACK OF FOOTPATH	800	SINGLE ARM	MID GREY	RIGID COLUMN	URBIS	AXIA 2 S1	PETITJEAN	SHEET STEEL	6	PAINTED	DAER
46100329	CHURCH STREET	Scawby Parish	496998.39	405559.82	6	7005	00185894	01/04/1984 00:00	2	2	LESS THAN 30MPH	BACK OF FOOTPATH	800	SINGLE ARM	MID GREY	RIGID COLUMN	URBIS	AXIA 2 S1	PETITJEAN	SHEET STEEL	6	PAINTED	DAER
46100329	CHURCH STREET	Scawby Parish	497027.59	405555.25	7	7006	00185895	01/04/1984 00:00	2	2	LESS THAN 30MPH	BACK OF FOOTPATH	800	SINGLE ARM	MID GREY	RIGID COLUMN	URBIS	AXIA 2 S1	PETITJEAN	SHEET STEEL	6	PAINTED	DAER
46100329	CHURCH STREET	Scawby Parish	497061.05	405547.26	8	7007	00185896	08/11/2024 00:00	2	2	LESS THAN 30MPH	BACK OF FOOTPATH	800	SINGLE ARM	NOT APPLICABLE	RIGID COLUMN	URBIS	AXIA 2 S1	MALLATITE	TUBULAR STEEL	6	GALVANISED	TUBULAR
46100329	CHURCH STREET	Scawby Parish	497100.62	405545.81	9	7008	00185897	08/11/2024 00:00	2	2	LESS THAN 30MPH	BACK OF FOOTPATH	800	SINGLE ARM	NOT APPLICABLE	RIGID COLUMN	URBIS	AXIA 2 S1	MALLATITE	TUBULAR STEEL	6	GALVANISED	MALLATITE
46100330	CHURCH VIEW	Alkborough Parish	488163.9	421863.27	1	7000	00185905	24/05/2018 00:00	1	2	LESS THAN 30MPH	ON POLE	300	SINGLE ARM	NOT APPLICABLE	POLE MOUNTED	URBIS	AXIA 2 S1	WOODEN PO	WOOD	5	NOT APPLICABI	PUDSEY DIAMOND
46100330	CHURCH VIEW	Alkborough Parish	488205.27	421837.88	2	7001	00185906	24/05/2018 00:00	1	2	LESS THAN 30MPH	ON POLE	300	SINGLE ARM	NOT APPLICABLE	POLE MOUNTED	URBIS	AXIA 2 S1	WOODEN PO	WOOD	5	NOT APPLICABI	PUDSEY DIAMOND
46100331	CHURCH VIEW CLOSE	Belton Parish	478178.94	406309.58	1	7000	00185907	20/09/2018 00:00	5	3	LESS THAN 30MPH	BACK OF FOOTPATH	0	POST TOP	NOT APPLICABLE	RIGID COLUMN	URBIS	AXIA 2 S1	MALLATITE	TUBULAR STEEL	6	GALVANISED	TUBULAR
46100331	CHURCH VIEW CLOSE	Belton Parish	478178.62	406339.95	2	7001	00185908	29/09/2018 00:00	5	3	LESS THAN 30MPH	BACK OF FOOTPATH	0	POST TOP	NOT APPLICABLE	RIGID COLUMN	URBIS	AXIA 2 S1	MALLATITE	TUBULAR STEEL	6	GALVANISED	TUBULAR
46100331	CHURCH VIEW CLOSE	Belton Parish	478155.79	406365.99	3	7002	00185909	20/09/2

46100349	CLIFF GARDENS	Scunthorpe	488690.51	411003.42	18	7017	00186079	01/04/1985 00:00	6	3	LESS THAN 30MPH	BACK OF FOOTPATH	1500	SINGLE ARM	NOT APPLICABLE	RIGID COLUMN	URBIS	AXIA 2 S1	PETITJEAN	SHEET STEEL	8	PAINTED	THAMES
46100349	CLIFF GARDENS	Scunthorpe	488657.32	411002.82	19	7018	00186080	01/04/1985 00:00	6	3	LESS THAN 30MPH	BACK OF FOOTPATH	1500	SINGLE ARM	NOT APPLICABLE	RIGID COLUMN	URBIS	AXIA 2 S1	PETITJEAN	SHEET STEEL	8	PAINTED	THAMES
46100349	CLIFF GARDENS	Scunthorpe	489155.5	411057.73	2	7001	00186063	01/04/1985 00:00	6	3	LESS THAN 30MPH	BACK OF FOOTPATH	1500	SINGLE ARM	NOT APPLICABLE	RIGID COLUMN	URBIS	AXIA 2 S1	PETITJEAN	SHEET STEEL	8	PAINTED	THAMES
46100349	CLIFF GARDENS	Scunthorpe	488621.41	410990.76	20	7019	00186081	01/04/1985 00:00	6	3	LESS THAN 30MPH	BACK OF FOOTPATH	1500	SINGLE ARM	NOT APPLICABLE	RIGID COLUMN	URBIS	AXIA 2 S1	PETITJEAN	SHEET STEEL	8	PAINTED	THAMES
46100349	CLIFF GARDENS	Scunthorpe	488600.55	411002.32	21	7020	00186082	01/04/1985 00:00	6	3	LESS THAN 30MPH	BACK OF FOOTPATH	1250	SINGLE ARM	NOT APPLICABLE	RIGID COLUMN	URBIS	AXIA 2 S1	PETITJEAN	SHEET STEEL	8	PAINTED	THAMES
46100349	CLIFF GARDENS	Scunthorpe	488572.35	411002.9	22	7021	00186083	01/04/1985 00:00	6	3	LESS THAN 30MPH	BACK OF FOOTPATH	1250	SINGLE ARM	NOT APPLICABLE	RIGID COLUMN	URBIS	AXIA 2 S1	PETITJEAN	SHEET STEEL	8	PAINTED	THAMES
46100349	CLIFF GARDENS	Scunthorpe	488532.87	410991.1	23	7022	00186084	01/04/1985 00:00	6	3	LESS THAN 30MPH	BACK OF FOOTPATH	1250	SINGLE ARM	NOT APPLICABLE	RIGID COLUMN	URBIS	AXIA 2 S1	PETITJEAN	SHEET STEEL	8	PAINTED	THAMES
46100349	CLIFF GARDENS	Scunthorpe	488498.51	411002.65	24	7023	00186085	01/04/1985 00:00	6	3	LESS THAN 30MPH	BACK OF FOOTPATH	1250	SINGLE ARM	NOT APPLICABLE	RIGID COLUMN	URBIS	AXIA 2 S1	PETITJEAN	SHEET STEEL	8	PAINTED	THAMES
46100349	CLIFF GARDENS	Scunthorpe	488466.41	410990.77	25	7024	00186086	01/04/1985 00:00	6	3	LESS THAN 30MPH	BACK OF FOOTPATH	1250	SINGLE ARM	NOT APPLICABLE	RIGID COLUMN	URBIS	AXIA 2 S1	PETITJEAN	SHEET STEEL	8	PAINTED	THAMES
46100349	CLIFF GARDENS	Scunthorpe	488442.63	411002.38	26	7025	00186087	01/04/1985 00:00	6	3	LESS THAN 30MPH	BACK OF FOOTPATH	1250	SINGLE ARM	NOT APPLICABLE	RIGID COLUMN	URBIS	AXIA 2 S1	PETITJEAN	SHEET STEEL	8	PAINTED	THAMES
46100349	CLIFF GARDENS	Scunthorpe	488412.05	410990.63	27	7026	00186088	01/04/1985 00:00	6	3	LESS THAN 30MPH	BACK OF FOOTPATH	1250	SINGLE ARM	NOT APPLICABLE	RIGID COLUMN	URBIS	AXIA 2 S1	PETITJEAN	SHEET STEEL	8	PAINTED	THAMES
46100349	CLIFF GARDENS	Scunthorpe	488379.56	411002.3	28	7027	00186089	01/04/1985 00:00	6	3	LESS THAN 30MPH	BACK OF FOOTPATH	1250	SINGLE ARM	NOT APPLICABLE	RIGID COLUMN	URBIS	AXIA 2 S1	PETITJEAN	SHEET STEEL	8	PAINTED	THAMES
46100349	CLIFF GARDENS	Scunthorpe	488350.71	410990.48	29	7028	00186090	01/04/1985 00:00	6	3	LESS THAN 30MPH	BACK OF FOOTPATH	1250	SINGLE ARM	NOT APPLICABLE	RIGID COLUMN	URBIS	AXIA 2 S1	PETITJEAN	SHEET STEEL	8	PAINTED	THAMES
46100349	CLIFF GARDENS	Scunthorpe	489129.76	411042.91	3	7002	00186064	01/04/1985 00:00	6	3	LESS THAN 30MPH	BACK OF FOOTPATH	1500	SINGLE ARM	NOT APPLICABLE	RIGID COLUMN	URBIS	AXIA 2 S1	PETITJEAN	SHEET STEEL	8	PAINTED	THAMES
46100349	CLIFF GARDENS	Scunthorpe	488328.92	411001.6	30	7029	00186091	01/04/1985 00:00	6	3	LESS THAN 30MPH	BACK OF FOOTPATH	1250	SINGLE ARM	NOT APPLICABLE	RIGID COLUMN	URBIS	AXIA 2 S1	PETITJEAN	SHEET STEEL	8	PAINTED	THAMES
46100349	CLIFF GARDENS	Scunthorpe	488297.27	410989.27	31	7030	00186092	01/04/1985 00:00	6	3	LESS THAN 30MPH	BACK OF FOOTPATH	1250	SINGLE ARM	NOT APPLICABLE	RIGID COLUMN	URBIS	AXIA 2 S1	PETITJEAN	SHEET STEEL	8	PAINTED	THAMES
46100349	CLIFF GARDENS	Scunthorpe	488269.36	411001.89	32	7031	00186093	01/04/1985 00:00	6	3	LESS THAN 30MPH	BACK OF FOOTPATH	1250	SINGLE ARM	NOT APPLICABLE	RIGID COLUMN	URBIS	AXIA 2 S1	PETITJEAN	SHEET STEEL	8	PAINTED	THAMES
46100349	CLIFF GARDENS	Scunthorpe	489095.46	411047.92	4	7003	00186065	01/04/1985 00:00	6	3	LESS THAN 30MPH	BACK OF FOOTPATH	1500	SINGLE ARM	NOT APPLICABLE	RIGID COLUMN	URBIS	AXIA 2 S1	PETITJEAN	SHEET STEEL	8	PAINTED	THAMES
46100349	CLIFF GARDENS	Scunthorpe	489069.98	411033.21	5	7004	00186066	01/04/1985 00:00	6	3	LESS THAN 30MPH	BACK OF FOOTPATH	1500	SINGLE ARM	NOT APPLICABLE	RIGID COLUMN	URBIS	AXIA 2 S1	PETITJEAN	SHEET STEEL	8	PAINTED	THAMES
46100349	CLIFF GARDENS	Scunthorpe	489040.78	411039.31	6	7005	00186067	01/04/1985 00:00	6	3	LESS THAN 30MPH	BACK OF FOOTPATH	1500	SINGLE ARM	NOT APPLICABLE	RIGID COLUMN	URBIS	AXIA 2 S1	PETITJEAN	SHEET STEEL	8	PAINTED	THAMES
46100349	CLIFF GARDENS	Scunthorpe	489015.48	411024.46	7	7006	00186068	01/04/1985 00:00	6	3	LESS THAN 30MPH	BACK OF FOOTPATH	1500	SINGLE ARM	NOT APPLICABLE	RIGID COLUMN	URBIS	AXIA 2 S1	PETITJEAN	SHEET STEEL	8	PAINTED	THAMES
46100349	CLIFF GARDENS	Scunthorpe	488982.66	411031.14	8	7007	00186069	01/04/1985 00:00	6	3	LESS THAN 30MPH	BACK OF FOOTPATH	1500	SINGLE ARM	NOT APPLICABLE	RIGID COLUMN	URBIS	AXIA 2 S1	PETITJEAN	SHEET STEEL	8	PAINTED	THAMES
46100349	CLIFF GARDENS	Scunthorpe	488959.29	411015.83	9	7008	00186070	01/04/1985 00:00	6	3	LESS THAN 30MPH	BACK OF FOOTPATH	1500	SINGLE ARM	NOT APPLICABLE	RIGID COLUMN	URBIS	AXIA 2 S1	PETITJEAN	SHEET STEEL	8	PAINTED	THAMES
46100350	CLIFF GROVE	Barton upon Humber Parish	502884.97	421810.38	1	7000	00186096	12/06/2019 00:00	5	2	LESS THAN 30MPH	BACK OF FOOTPATH	0	POST TOP	NOT APPLICABLE	RIGID COLUMN	URBIS	AXIA 2 S1	MALLATITE	TUBULAR STEEL	6	GALVANISED	TUBULAR
46100350	CLIFF GROVE	Barton upon Humber Parish	502854.37	421789.43	2	7001	00186097	12/06/2019 00:00	5	2	LESS THAN 30MPH	BACK OF FOOTPATH	0	POST TOP	NOT APPLICABLE	RIGID COLUMN	URBIS	AXIA 2 S1	MALLATITE	TUBULAR STEEL	6	GALVANISED	TUBULAR
46100350	CLIFF GROVE	Barton upon Humber Parish	502826.04	421783.58	3	7002	00186098	12/06/2019 00:00	5	2	LESS THAN 30MPH	BACK OF FOOTPATH	0	POST TOP	NOT APPLICABLE	RIGID COLUMN	URBIS	AXIA 2 S1	MALLATITE	TUBULAR STEEL	6	GALVANISED	TUBULAR
46100350	CLIFF GROVE	Barton upon Humber Parish	502794.89	421796.35	4	7003	00186099	01/04/1982 00:00	5	2	LESS THAN 30MPH	BACK OF FOOTPATH	300	SINGLE ARM	MID GREY	RIGID COLUMN	URBIS	AXIA 2 S1	PETITJEAN	SHEET STEEL	5	PAINTED	DAER
46100351	CLIFF ROAD	Winteringham Parish	493108.14	421937.06	1	7000	00186100	01/04/2012 00:00	1	3	LESS THAN 30MPH	VERGE	0	POST TOP	NOT APPLICABLE	RIGID COLUMN	URBIS	AXIA 2 S1	VALMONT ST	TUBULAR STEEL	6	GALVANISED	TUBULAR
46100351	CLIFF ROAD	Winteringham Parish	492828.49	421863.46	10	7009	00188659	01/04/2012 00:00	1	3	LESS THAN 30MPH	ON POLE	300	SINGLE ARM	NOT APPLICABLE	POLE MOUNTED	URBIS	AXIA 2 S1	WOODEN PO	WOOD	5	NOT APPLICABI	Not Applicable
46100351	CLIFF ROAD	Winteringham Parish	492815.05	421851.63	11	7010	00188660	01/04/2012 00:00	1	3	LESS THAN 30MPH	ON POLE	300	SINGLE ARM	NOT APPLICABLE	POLE MOUNTED	URBIS	AXIA 2 S1	WOODEN PO	WOOD	5	NOT APPLICABI	Not Applicable
46100351	CLIFF ROAD	Winteringham Parish	493092.48	421924.74	2	7001	00188651	01/04/2012 00:00	1	3	LESS THAN 30MPH	ON POLE	1000	SINGLE ARM	NOT APPLICABLE	POLE MOUNTED	URBIS	AXIA 2 S1	WOODEN PO	WOOD	5	NOT APPLICABI	Not Applicable
46100351	CLIFF ROAD	Winteringham Parish	493087.39	421941.31	3	7002	00188652	01/04/2012 00:00	1	3	LESS THAN 30MPH	VERGE	0	POST TOP	NOT APPLICABLE	RIGID COLUMN	URBIS	AXIA 2 S1	MALLATITE	TUBULAR STEEL	6	GALVANISED	TUBULAR
46100351	CLIFF ROAD	Winteringham Parish	493053.76	421893.44	4	7003	00188653	01/04/2012 00:00	1	3	LESS THAN 30MPH	ON POLE	300	SINGLE ARM	NOT APPLICABLE	POLE MOUNTED	URBIS	AXIA 2 S1	WOODEN PO	WOOD	5	NOT APPLICABI	Not Applicable
46100351	CLIFF ROAD	Winteringham Parish	493011.53	421869.12	5	7004	00188654	01/04/2012 00:00	1	3	LESS THAN 30MPH	ON POLE	300	SINGLE ARM	NOT APPLICABLE	POLE MOUNTED	URBIS	AXIA 2 S1	WOODEN PO	WOOD	5	NOT APPLICABI	Not Applicable
46100351	CLIFF ROAD	Winteringham Parish	492971.24	421870.21	6	7005	00188655	01/04/2012 00:00	1	3	LESS THAN 30MPH	ON POLE	300	SINGLE ARM	NOT APPLICABLE	POLE MOUNTED	URBIS	AXIA 2 S1	WOODEN PO	WOOD	5	NOT APPLICABI	Not Applicable
46100351	CLIFF ROAD	Winteringham Parish	492951.7	421868.24	7	7006	00188656	01/04/2012 00:00	1	3	LESS THAN 30MPH	ON POLE	300	SINGLE ARM	NOT APPLICABLE	POLE MOUNTED	URBIS	AXIA 2 S1	WOODEN PO	WOOD	5	NOT APPLICABI	Not Applicable
46100351	CLIFF ROAD	Winteringham Parish	492902.82	421865.99	8	7007	00188657	01/04/2012 00:00	1	3	LESS THAN 30MPH	ON POLE	300	SINGLE ARM	NOT APPLICABLE	POLE MOUNTED	URBIS	AXIA 2 S1	WOODEN PO	WOOD	5	NOT APPLICABI	Not Applicable
46100351	CLIFF ROAD	Winteringham Parish	492861.44	421864.54	9	7008	00188658	01/04/2012 00:00	1	3	LESS THAN 30MPH	ON POLE	300	SINGLE ARM	NOT APPLICABLE	POLE MOUNTED	URBIS	AXIA 2 S1	WOODEN PO	WOOD	5	NOT APPLICABI	Not Applicable
46100352	CLIFF STREET	Scunthorpe	490043.63	410661.07	1	7000	00186101	01/04/1992 00:00	2	4	LESS THAN 30MPH	FRONT OF FOOTPATH	0	POST TOP	BLACK	RIGID COLUMN	KINGSWOOD	MERCIA 3	KINGSWOOD	TUBULAR STEEL	5	PAINTED	METRO
46100352	CLIFF STREET	Scunthorpe	490051.11	410682.56	2	7001	00186102	01/04/1992 00:00	2	4	LESS THAN 30MPH	FRONT OF FOOTPATH	0	POST TOP	BLACK	RIGID COLUMN	KINGSWOOD	MERCIA 3	KINGSWOOD	TUBULAR STEEL	5	PAINTED	METRO
46100352	CLIFF STREET	Scunthorpe	490039.69	410701.91	3	7002	00186103	01/04/1992 00:00	2	4	LESS THAN 30MPH	FRONT OF FOOTPATH	0	POST TOP	BLACK	RIGID COLUMN	KINGSWOOD	MERCIA 3	KINGSWOOD	TUBULAR STEEL	5	PAINTED	METRO
46100352	CLIFF STREET	Scunthorpe	490047.57	410723.42	4	7003	00186104	01/04/1992 00:00	2	4	LESS THAN 30MPH	FRONT OF FOOTPATH	0	POST TOP	BLACK	RIGID COLUMN	KINGSWOOD	MERCIA 3	KINGSWOOD	TUBULAR STEEL	5	PAINTED	METRO
46100352	CLIFF STREET	Scunthorpe	490036.73	410738.61	5	7004	00186105	01/04/1992 00:00	2	4	LESS THAN 30MPH	FRONT OF FOOTPATH	0	POST TOP	BLACK	RIGID COLUMN	KINGSWOOD	MERCIA 3	KINGSWOOD	TUBULAR STEEL	5	PAINTED	METRO
46100352	CLIFF STREET	Scunthorpe	490044.99	410755.61	6	7005	00186106	01/04/1992 00:00	2	4	LESS THAN 30MPH	FRONT OF FOOTPATH	0	POST TOP	BLACK	RIGID COLUMN	KINGSWOOD	MERCIA 3	KINGSWOOD	TUBULAR STEEL	5	PAINTED	METRO
46100352	CLIFF STREET	Scunthorpe	490033.71	410772.52	7	7006	00186107	01/04/1992 00:00	2	4	LESS THAN 30MPH	FRONT OF FOOTPATH	0	POST TOP	BLACK	RIGID COLUMN	KINGSWOOD	MERCIA 3	KINGSWOOD	TUBULAR STEEL	5	PAINTED	METRO
46100353	CLOISTER WALK	Broughton Parish	496735.06	408729.04	1	7000	00186108	01/03/2019 00:00	1	1	LESS THAN 30MPH	VERGE	0	POST TOP	NOT APPLICABLE	RIGID COLUMN	URBIS	AXIA 2 S1	MALLATITE	TUBULAR STEEL	6	GALVANISED	TUBULAR
46100355	COACH HOUSE GARDENS	Scawby Parish	496845.19	405342.18	1	7000	00186109	01/04/1980 00:00	2	2	LESS THAN 30MPH	VERGE	0	POST TOP	NOT APPLICABLE	RIGID COLUMN	URBIS	AXIA 2 S1	PETITJEAN	SHEET STEEL	5	GALVANISED	NIDD
46100355	COACH HOUSE GARDENS	Scawby Parish	496822.61	405343.25	2	7001	00186110	01/04/1980 00:00	2	2	LESS THAN 30MPH	VERGE	0	POST TOP	NOT APPLICABLE	RIGID COLUMN	URBIS	AXIA 2 S1	PETITJEAN	SHEET STEEL	5	GALVANISED	NIDD
46100355	COACH HOUSE GARDENS	Scawby Parish	496802.22	405329.54	3	7002	00186111	01/04/1980 00:00	2	2	LESS THAN 30MPH	VERGE	0	POST TOP	NOT APPLICABLE	RIGID COLUMN	URBIS	AXIA 2 S1	PETITJEAN	SHEET STEEL	5	GALVANISED	NIDD
46100355	COACH HOUSE GARDENS	Scawby Parish	496775.14	405324.46	4	7003	00186112	01/04/1980 00:00	2	2	LESS THAN 30MPH	VERGE	0	POST TOP	NOT APPLICABLE	RIGID COLUMN	URBIS	AXIA 2 S1	PETITJEAN	SHEET STEEL	5	GALVANISED	NIDD
46100355	COACH HOUSE GARDENS	Scawby Parish	496749.27	405324.41	5	7004	00186113	01/04/1980 00:00	2	2	LESS THAN 30MPH	VERGE	0	POST TOP	NOT APPLICABLE	RIGID COLUMN	URBIS	AXIA 2 S1	PETITJEAN	SHEET STEEL	5	GALVANISED	NIDD
46100355	COACH HOUSE GARDENS	Scawby Parish	496721.36	405318.18	6	7005	00186114	01/04/1980 00:00	2	2	LESS THAN 30MPH	VERGE	0	POST TOP	NOT APPLICABLE	RIGID COLUMN	URBIS	AXIA 2 S1	PETITJEAN	SHEET STEEL	5	GALVANISED	NIDD
46100356	COATES AVENUE	Winterton Parish	492135.84	418199.09	1	7000	00186115	01/04/2013 00:00	1	1	LESS THAN 30MPH	VERGE	0	POST TOP	NOT APPLICABLE	RIGID COLUMN	URBIS	AXIA 2 S1	MALLATITE	TUBULAR STEEL	6	GALVANISED	TUBULAR
46100356	COATES AVENUE	Winterton Parish	492129.4	418154.59	2	7001	00186116	01/04/2013 00:00	1	1	LESS THAN 30MPH	VERGE	0	POST TOP	NOT APPLICABLE	RIGID COLUMN	URBIS	AXIA 2 S1	MALLATITE	TUBULAR STEEL	6	GALVANISED	TUBULAR
46100357	COCKETTS LANE	Hibaldstow Parish	497651.92	402500	1	7000	00186117	31/10/2023 00:00	1	4	LESS THAN 30MPH	BACK OF FOOTPATH	3000	NOT APPLICA	NOT APPLICABLE	RIGID COLUMN	URBIS	AXIA 2 S1	MALLATITE	TUBULAR STEEL	6	NOT APPLICABI	MALLATITE
46100357	COCKETTS LANE	Hibaldstow Parish	497648.17	402534.1	2	7001	00186118	01/04/1999 00:00	1	4	LESS THAN 30MPH	BACK OF FOOTPATH	300	SINGLE ARM	NOT APPLICABLE	RIGID COLUMN	URBIS	AXIA 2 S1	PETITJEAN	TUBULAR STEEL	6	NOT APPLICABI	STEPPED TUBULAR
46100359	COLERIDGE AVENUE	Scunthorpe	487968.36	409283.56	1	7000	00186119	01/04/2008 00:00	5	2	BETWEEN 30-50 MPH	BACK OF FOOTPATH	0	POST TOP	NOT APPLICABLE	RIGID COLUMN	URBIS	AXIA 2 S1	MALLATITE	TUBULAR STEEL	6	GALVANISED	STEPPED TUBULAR
46100359	COLERIDGE AVENUE	Scunthorpe	487935.74	409288.46	2	7001	00186120	01/04/2008 00:00	5	2	BETWEEN 30-50 MPH	BACK OF FOOTPATH	0	POST TOP	NOT APPLICABLE	RIGID COLUMN	URBIS	AXIA 2 S1	MALLATITE	TUBULAR STEEL	6	GALVANISED	STEPPED TUBULAR
46100359	COLERIDGE AVENUE	Scunthorpe	487901.72	409294.2	3	7002	00186121	01/04/2008 00:00	5	2	BETWEEN 30-50 MPH	BACK OF FOOTPATH	0	POST TOP	NOT APPLICABLE	RIGID COLUMN	URBIS	AXIA 2 S1	MALLATITE	TUBULAR STEEL	6	GALVANISED	STEPPED TUBULAR
46100359	COLERIDGE AVENUE	Scunthorpe	487862.38	409295.6	4	7003	00186122	01/04/2008 00:00	5	2	BETWEEN 30-50 MPH	BACK OF FOOTPATH	0	POST TOP	NOT APPLICABLE	RIGID COLUMN	URBIS	AXIA 2 S1	MALLATITE	TUBULAR STEEL	6	GALVANISED	STEPPED TUBULAR
46100359	COLERIDGE AVENUE	Scunthorpe	487830.04	409291.96	5	7004	00186123	01/04/2008 00:00	5	2	BETWEEN 30-50 MPH	BACK OF FOOTPATH	0	POST TOP	NOT APPLICABLE	RIGID COLUMN	URBIS	AXIA 2 S1	MALLATITE	TUBULAR STEEL	6	GALVANISED	STEPPED TUBULAR
46100359	COLERIDGE AVENUE	Scunthorpe	487811.98	409285.66	6	7005	00186124	01/04/2008 00:00	5	2	BETWEEN 30-50 MPH	BACK OF FOOTPATH	0	POST TOP	NOT APPLICABLE	RIGID COLUMN	URBIS	AXIA 2 S1	MALLATITE	TUBULAR STEEL	6	GALVANISED	STEPPED TUBULAR
46100359	COLERIDGE AVENUE	Scunthorpe	487784.12	409287.48	7	7006	00186125	01/04/2008 00:00	5	2	BETWEEN 30-50 MPH	BACK OF FOOTPATH	0	POST TOP	NOT APPLICABLE	RIGID COLUMN	URBIS	AXIA 2 S1	MALLATITE	TUBULAR STEEL	6	GALVANISED	STEPPED TUBULAR
46100360	COLIN ROAD	Scunthorpe	490473.55	410676.46	1	7000	00186126	01/04/2001 00:00	2	4	LESS THAN 30MPH	BACK OF FOOTPATH	1000	SINGLE ARM	NOT APPLICABLE	RIGID COLUMN	URBIS	AXIA 2 S1	PETITJEAN	SHEET STEEL	8	GALVANISED	THAMES
46100360	COLIN ROAD	Scunthorpe	490463.92	410643.22	2	7001	00186127	01/04/2001 00:00	2	4	LESS THAN 30MPH	BACK OF FOOTPATH	1000	SINGLE ARM	NOT APPLICABLE	RIGID COLUMN	URBIS	AXIA 2 S1	PETITJEAN	SHEET STEEL	8	GALVANISED	THAMES
46100360	COLIN ROAD	Scunthorpe	490478.26	410625.03	3	7002	00186128	01/04/2001 00:00	2	4	LESS THAN 30MPH	BACK OF FOOTPATH	1000	SINGLE ARM	NOT APPLICABLE	RIGID COLUMN	URBIS	AXIA 2 S1	PETITJEAN	SHEET STEEL	8	GALVANISED	THAMES
46100360	COLIN ROAD	Scunthorpe	490468.67	410597.57	4	7003	00186129	01/04/2001 00:00	2	4	LESS THAN 30MPH	BACK OF FOOTPATH	1000	SINGLE ARM	NOT APPLICABLE	RIGID COLUMN	URBIS	AXIA 2 S1	PETITJEAN	SHEET STEEL	8	GALVANISED	THAMES
46100360	COLIN ROAD	Scunthorpe	490483.81	410569.84	5	7004	00186130	01/04/2001 00:00	2	4	LESS THAN 30MPH	BACK OF FOOTPATH	1000	SINGLE ARM	NOT APPLICABLE	RIGID COLUMN	URBIS	AXIA 2 S1	PETITJEAN	SHEET STEEL	8	GALVANISED	THAMES
46100360	COLIN ROAD	Scunthorpe	490473.67	410542.91	6	7005	00186131	01/04/2001 00:00	2	4	LESS THAN 30MPH	BACK OF FOOTPATH	1000	SINGLE ARM	NOT APPLICABLE	RIGID COLUMN	URBIS	AXIA 2 S1	PETITJEAN	SHEET STEEL	8	GALVANISED	THAMES
46100360	COLIN ROAD	Scunthorpe	490488.71	410512.6	7	7006	00186132	01/04/2001 00:00	2	4	LESS THAN 30MPH	BACK OF FOOTPATH	1000	SINGLE ARM	NOT APPLICABLE	RIGID COLUMN	URBIS	AXIA 2 S1	PETITJEAN	SHEET STEEL	8	GALVANISED	THAMES
46100360	COLIN ROAD	Scunthorpe	490480.55	410479.75	8	7007	00186133	01/04/2001 00:00	2	4	LESS THAN 30MPH	BACK OF FOOTPATH	1000	SINGLE ARM	NOT APPLICABLE	RIGID COLUMN	URBIS	AXIA 2 S1	PETITJEAN	SHEET STEEL	8	GALVANISED	THAMES
46100360	COLIN ROAD	Scunthorpe	490494.89	410453.87	9	7008	00186134	01/04/2001 00:00	2	4	LESS THAN 30MPH	BACK OF FOOTPATH	1000	SINGLE ARM	NOT APPLICABLE	RIGID COLUMN	URBIS	AXIA 2 S1	PETITJEAN	SHEET STEEL	8	GALVANISED	THAMES
46100361	COLLEGE CLOSE	Alkborough Parish	488144.01	421432.66	1	7000	00186135	01/04/2012 00:00	1	2	LESS THAN 30MPH	BACK OF FOOTPATH	0	POST TOP	NOT APPLICABLE	RIGID COLUMN	URBIS	AXIA 2 S1	MALLATITE	TUBULAR STEEL	6	GALVANISED	TUBULAR
46100361	COLLEGE CLOSE	Alkborough Parish	488197.88	421417.22	2	7001	00186136	30/05/2018 00:00	1	2	LESS THAN 30MPH	ON POLE	300	SINGLE ARM	NOT APPLICABLE	POLE MOUNTED	URBIS	AXIA 2 S1	WOODEN PO	WOOD	5	NOT APPLICABI	PUDSEY DIAMOND
46100362	WICKENBY CLOSE	Scunthorpe	487911	408027	1	7001	04200484	01/09/2015 00:00	3	4	LESS THAN 30MPH	BACK OF FOOTPATH	0	POST TOP	NOT APPLICABLE	RIGID COLUMN	PHILIPS	STELA LONG 18 LED	MALLATITE	TUBULAR STEEL	6	GALVANISED	TUBULAR
46100362	WICKENBY CLOSE	Scunthorpe	487904	407992	2	7002	04200485	01/09/2015 00:00	3	4	LESS THAN 30MPH	BACK OF FOOTPATH	0	POST TOP	NOT APPLICABLE	RIGID COLUMN	PHILIPS	STELA LONG 18 LED	MALLATITE	TUBULAR STEEL	6	GALVANISED	TUBULAR
46100362	WICKENBY CLOSE	Scunthorpe	487922	407995	3	7003	04200486	01/09/2015 00:00	3	4	LESS THAN 30MPH	BACK OF FOOTPATH	0	POST TOP	NOT APPLICABLE	RIGID COLUMN	PHILIPS	STELA LONG 18 LED	MALLATITE	TUBULAR STEEL	6	GALVANISED	TUBULAR
46100363	COLLINSON AVENUE	Scunthorpe	487601.13	411219.12	1	7000	00186137	01/04/1989 00:00	2	3	LESS THAN 30MPH	BACK OF FOOTPATH	0	POST TOP	NOT APPLICABLE	RIGID COLUMN	URBIS	AXIA 2 S1	PETITJEAN	SHEET STEEL	6	GALVANISED	DAER
46100363	COLLINSON AVENUE	Scunthorpe	487473.57	411291.36	10	7009	00186146	01/04/1989 00:00	2	3	LESS THAN 30MPH	BACK OF FOOTPATH	0	POST TOP	NOT APPLICABLE	RIGID COLUMN	URBIS	AXIA 2 S1	PETITJEAN	SHEET STEEL	6	GALVANISED	DAER
46100363	COLLINSON AVENUE	Scunthorpe	487448.62	411301.89	11	7010	00186147	01/04/1989 00:00	2	3	LESS THAN 30MPH	BACK OF FOOTPATH	0	POST TOP	NOT APPLICABLE	RIGID COLUMN	URBIS	AXIA 2 S1	PETITJEAN	SHEET STEEL	6	GALVANISED	DAER
46100363	COLLINSON AVENUE	Scunthorpe	487422.15	411291.22	12	7011	00186148	01/04/1989 00:00	2	3	LESS THAN 30MPH	BACK OF FOOTPATH	0	POST TOP	NOT APPLICABLE	RIGID COLUMN	URBIS	AXIA 2 S1	PETITJEAN	SHEET STEEL	6	GALVANISED	DAER
46100363	COLLINSON AVENUE	Scunthorpe	487399.78	411301.59	13	7012	00186149	01/04/1989 00:00	2	3	LESS THAN 30MPH	BACK OF FOOTPATH	0	POST TOP	NOT APPLICABLE	RIGID COLUMN	URBIS	AXIA 2 S1	PETITJEAN	SHEET STEEL	6	GALVANISED	DAER
46100363	COLLINSON AVENUE	Scunthorpe	487370.3	411290.78	14	7013	00186150	01/04/1989 00:00	2	3	LESS THAN 30MPH	BACK OF FOOTPATH	0	POST TOP	NOT APPLICABLE	RIGID COLUMN	URBIS	AXIA 2 S1	PETITJEAN	SHEET STEEL	6	GALVANISED	DAER
46100363	COLLINSON AVENUE	Scunthorpe	487344.67	411301.24	15	7014	00186151	01/04/1989 00:00	2	3	LESS THAN 30MPH	BACK OF FOOTPATH	0	POST TOP	NOT APPLICABLE	RIGID COLUMN	URBIS	AXIA 2 S1	PETITJEAN	SHEET STEEL	6	GALVANISED	DAER
46100363	COLLINSON AVENUE	Scunthorpe	487329.94	411291.7	16	7015	00186152	01/04/1989 00:00	2	3	LESS THAN 30MPH	BACK OF FOOTPATH	0	POST TOP	NOT APPLICABLE	RIGID COLUMN	URBIS	AXIA 2 S1	PETITJEAN	SHEET STEEL	6	GALVANISED	DAER
46100363	COLLINSON AVENUE	Scunthorpe	487308.26	411301.47	17	7016	00186153	01/04/1989 00:00	2	3	LESS THAN 30MPH	BACK OF FOOTPATH	0	POST TOP	NOT APPLICABLE	RIGID COLUMN	URBIS	AXIA 2 S1	PETITJEAN	SHEET STEEL	6	GALVANISED	DAER
46100363	COLLINSON AVENUE	Scunthorpe	487281.56	411290.77	18	7017	00186154	01/04/1989 00:00	2	3	LESS THAN 30MPH	BACK OF FOOTPATH	0	POST TOP	NOT APPLICABLE	RIGID COLUMN	URBIS	AXI

46100386	CORPORATION ROAD	Scunthorpe	489524.47	410987.37	2	7001	00186312	01/04/2006 00:00	4	4	LESS THAN 30MPH	BACK OF FOOTPATH	1000	SINGLE ARM	NOT APPLICABLE	RIGID COLUMN	URBIS	AXIA 2 S1	PETITJEAN	SHEET STEEL	8	GALVANISED	THAMES
46100386	CORPORATION ROAD	Scunthorpe	489508.96	411016.65	3	7002	00186313	01/04/2006 00:00	4	4	LESS THAN 30MPH	VERGE	1000	SINGLE ARM	NOT APPLICABLE	RIGID COLUMN	URBIS	AXIA 2 S1	PETITJEAN	SHEET STEEL	8	GALVANISED	THAMES
46100386	CORPORATION ROAD	Scunthorpe	489516.13	411049.46	4	7003	00186314	01/04/2006 00:00	4	4	LESS THAN 30MPH	BACK OF FOOTPATH	1000	SINGLE ARM	NOT APPLICABLE	RIGID COLUMN	URBIS	AXIA 2 S1	PETITJEAN	SHEET STEEL	8	GALVANISED	THAMES
46100386	CORPORATION ROAD	Scunthorpe	489511.36	411082.79	5	7004	00186315	01/04/2006 00:00	4	4	LESS THAN 30MPH	BACK OF FOOTPATH	1000	SINGLE ARM	NOT APPLICABLE	RIGID COLUMN	URBIS	AXIA 2 S1	PETITJEAN	SHEET STEEL	8	GALVANISED	THAMES
46100386	CORPORATION ROAD	Scunthorpe	489507.3	411113.77	6	7005	00186316	01/04/2006 00:00	4	4	LESS THAN 30MPH	BACK OF FOOTPATH	1000	SINGLE ARM	NOT APPLICABLE	RIGID COLUMN	URBIS	AXIA 2 S1	PETITJEAN	SHEET STEEL	8	GALVANISED	THAMES
46100386	CORPORATION ROAD	Scunthorpe	489490.43	411134.73	7	7006	00186317	01/04/2006 00:00	4	4	LESS THAN 30MPH	BACK OF FOOTPATH	1000	SINGLE ARM	NOT APPLICABLE	RIGID COLUMN	URBIS	AXIA 2 S1	PETITJEAN	SHEET STEEL	8	GALVANISED	THAMES
46100386	CORPORATION ROAD	Scunthorpe	489452.64	411132.81	8	7007	00186318	01/04/2006 00:00	4	4	LESS THAN 30MPH	VERGE	1000	SINGLE ARM	NOT APPLICABLE	RIGID COLUMN	URBIS	AXIA 2 S1	PETITJEAN	SHEET STEEL	8	GALVANISED	THAMES
46100386	CORPORATION ROAD	Scunthorpe	489423.42	411129.82	9	7008	00186319	01/04/2006 00:00	4	4	LESS THAN 30MPH	BACK OF FOOTPATH	1000	SINGLE ARM	NOT APPLICABLE	RIGID COLUMN	URBIS	AXIA 2 S1	PETITJEAN	SHEET STEEL	8	GALVANISED	THAMES
46100388	COTTAGE LANE	Barton upon Humber Parish	503151.65	422051.78	1	7000	00186321	14/06/2019 00:00	5	2	LESS THAN 30MPH	BACK OF FOOTPATH	0	POST TOP	NOT APPLICABLE	RIGID COLUMN	URBIS	AXIA 2 S1	MALLATITE	TUBULAR STEEL	6	GALVANISED	TUBULAR
46100388	COTTAGE LANE	Barton upon Humber Parish	503140.45	422017.94	2	7001	00186322	14/06/2019 00:00	5	2	LESS THAN 30MPH	BACK OF FOOTPATH	0	POST TOP	NOT APPLICABLE	RIGID COLUMN	URBIS	AXIA 2 S1	MALLATITE	TUBULAR STEEL	6	GALVANISED	TUBULAR
46100388	COTTAGE LANE	Barton upon Humber Parish	503130.79	421989.36	3	7002	00186323	01/04/1982 00:00	5	2	LESS THAN 30MPH	BACK OF FOOTPATH	300	SINGLE ARM	MID GREY	RIGID COLUMN	URBIS	AXIA 2 S1	PETITJEAN	SHEET STEEL	5	PAINTED	DAER
46100389	COUNCIL TERRACE	Barton upon Humber Parish	502753	422357.15	1	7000	00186328	20/08/2021 00:00	5	2	LESS THAN 30MPH	VERGE	0	POST TOP	NOT APPLICABLE	RIGID COLUMN	URBIS	AXIA 2 S1	MALLATITE	TUBULAR STEEL	6	GALVANISED	TUBULAR
46100389	COUNCIL TERRACE	Barton upon Humber Parish	502722.94	422364.82	2	7001	00186329	01/04/1993 00:00	5	2	LESS THAN 30MPH	VERGE	300	SINGLE ARM	MID GREY	RIGID COLUMN	URBIS	AXIA 2 S1	PETITJEAN	SHEET STEEL	5	PAINTED	DAER
46100389	COUNCIL TERRACE	Barton upon Humber Parish	502698.03	422370.66	3	7002	00186330	01/04/1993 00:00	5	2	LESS THAN 30MPH	VERGE	300	SINGLE ARM	MID GREY	RIGID COLUMN	URBIS	AXIA 2 S1	PETITJEAN	SHEET STEEL	5	PAINTED	DAER
46100390	COVE ROAD	Haxey Parish	474833.43	399970.33	1	7000	00186331	01/04/1993 00:00	6	2	LESS THAN 30MPH	BACK OF FOOTPATH	800	SINGLE ARM	NOT APPLICABLE	RIGID COLUMN	URBIS	AXIA 2 S1	PETITJEAN	SHEET STEEL	6	GALVANISED	DAER
46100390	COVE ROAD	Haxey Parish	474537.83	400046.26	10	7009	00186340	01/04/1993 00:00	6	2	LESS THAN 30MPH	VERGE	800	SINGLE ARM	NOT APPLICABLE	RIGID COLUMN	URBIS	AXIA 2 S1	PETITJEAN	SHEET STEEL	6	GALVANISED	DAER
46100390	COVE ROAD	Haxey Parish	474795.16	399969.9	2	7001	00186332	01/04/1993 00:00	6	2	LESS THAN 30MPH	VERGE	800	SINGLE ARM	NOT APPLICABLE	RIGID COLUMN	URBIS	AXIA 2 S1	PETITJEAN	SHEET STEEL	6	GALVANISED	DAER
46100390	COVE ROAD	Haxey Parish	474757.94	399970.79	3	7002	00186333	01/04/1993 00:00	6	2	LESS THAN 30MPH	VERGE	800	SINGLE ARM	NOT APPLICABLE	RIGID COLUMN	URBIS	AXIA 2 S1	PETITJEAN	SHEET STEEL	6	GALVANISED	DAER
46100390	COVE ROAD	Haxey Parish	474724.76	399973.18	4	7003	00186334	01/04/1999 00:00	6	2	LESS THAN 30MPH	VERGE	800	SINGLE ARM	NOT APPLICABLE	RIGID COLUMN	URBIS	AXIA 2 S1	T AND L	TUBULAR STEEL	6	GALVANISED	STEPPED TUBULAR
46100390	COVE ROAD	Haxey Parish	474696.88	399978.17	5	7004	00186335	01/04/1993 00:00	6	2	LESS THAN 30MPH	VERGE	800	SINGLE ARM	NOT APPLICABLE	RIGID COLUMN	URBIS	AXIA 2 S1	PETITJEAN	SHEET STEEL	6	GALVANISED	DAER
46100390	COVE ROAD	Haxey Parish	474660.51	399976.19	6	7005	00186336	01/04/1993 00:00	6	2	LESS THAN 30MPH	VERGE	800	SINGLE ARM	NOT APPLICABLE	RIGID COLUMN	URBIS	AXIA 2 S1	PETITJEAN	SHEET STEEL	6	GALVANISED	DAER
46100390	COVE ROAD	Haxey Parish	474626.59	399990.78	7	7006	00186337	01/04/1993 00:00	6	2	LESS THAN 30MPH	VERGE	800	SINGLE ARM	NOT APPLICABLE	RIGID COLUMN	URBIS	AXIA 2 S1	PETITJEAN	SHEET STEEL	6	GALVANISED	DAER
46100390	COVE ROAD	Haxey Parish	474600.79	400003.6	8	7007	00186338	01/04/1993 00:00	6	2	LESS THAN 30MPH	VERGE	800	SINGLE ARM	NOT APPLICABLE	RIGID COLUMN	URBIS	AXIA 2 S1	PETITJEAN	SHEET STEEL	6	GALVANISED	DAER
46100390	COVE ROAD	Haxey Parish	474567.8	400021.03	9	7008	00186339	01/04/1993 00:00	6	2	LESS THAN 30MPH	VERGE	800	SINGLE ARM	NOT APPLICABLE	RIGID COLUMN	URBIS	AXIA 2 S1	PETITJEAN	SHEET STEEL	6	GALVANISED	DAER
46100391	COVERT ROAD	Scunthorpe	489552.68	408183.33	1	7000	00186341	01/04/2013 00:00	1	3	LESS THAN 30MPH	BACK OF FOOTPATH	0	POST TOP	NOT APPLICABLE	RIGID COLUMN	URBIS	AXIA 2 S1	MALLATITE	TUBULAR STEEL	6	GALVANISED	TUBULAR
46100391	COVERT ROAD	Scunthorpe	489561.06	408233.57	2	7001	00186342	01/04/1980 00:00	1	3	LESS THAN 30MPH	BACK OF FOOTPATH	800	SINGLE ARM	NOT APPLICABLE	RIGID COLUMN	URBIS	AXIA 2 S1	PETITJEAN	SHEET STEEL	6	GALVANISED	DAER
46100392	COWPER AVENUE	Scunthorpe	487958.12	409365.34	1	7000	00186343	01/04/2010 00:00	5	2	BETWEEN 30-50 MPH	BACK OF FOOTPATH	0	POST TOP	NOT APPLICABLE	RIGID COLUMN	URBIS	AXIA 2 S1	MALLATITE	TUBULAR STEEL	6	GALVANISED	STEPPED TUBULAR
46100392	COWPER AVENUE	Scunthorpe	487705.98	409365.34	10	7009	00186352	01/04/2010 00:00	5	2	NOT ON A ROAD	BACK OF FOOTPATH	0	POST TOP	NOT APPLICABLE	MID HINGED	URBIS	AXIA 2 S1	VALMONT ST	SHEET STEEL	5	GALVANISED	LEVEN
46100392	COWPER AVENUE	Scunthorpe	487932.36	409377.38	2	7001	00186344	01/04/2010 00:00	5	2	BETWEEN 30-50 MPH	BACK OF FOOTPATH	0	POST TOP	NOT APPLICABLE	RIGID COLUMN	URBIS	AXIA 2 S1	MALLATITE	TUBULAR STEEL	6	GALVANISED	STEPPED TUBULAR
46100392	COWPER AVENUE	Scunthorpe	487901	409384.52	3	7002	00186345	01/04/2010 00:00	5	2	BETWEEN 30-50 MPH	BACK OF FOOTPATH	0	POST TOP	NOT APPLICABLE	RIGID COLUMN	URBIS	AXIA 2 S1	MALLATITE	TUBULAR STEEL	6	GALVANISED	STEPPED TUBULAR
46100392	COWPER AVENUE	Scunthorpe	487865.02	409379.9	4	7003	00186346	01/04/2010 00:00	5	2	BETWEEN 30-50 MPH	BACK OF FOOTPATH	0	POST TOP	NOT APPLICABLE	RIGID COLUMN	URBIS	AXIA 2 S1	MALLATITE	TUBULAR STEEL	6	GALVANISED	STEPPED TUBULAR
46100392	COWPER AVENUE	Scunthorpe	487831.71	409366.77	5	7004	00186347	01/04/2010 00:00	5	2	BETWEEN 30-50 MPH	BACK OF FOOTPATH	0	POST TOP	NOT APPLICABLE	RIGID COLUMN	URBIS	AXIA 2 S1	MALLATITE	TUBULAR STEEL	6	GALVANISED	STEPPED TUBULAR
46100392	COWPER AVENUE	Scunthorpe	487816.86	409373.18	6	7005	00186348	01/04/2010 00:00	5	2	BETWEEN 30-50 MPH	BACK OF FOOTPATH	0	POST TOP	NOT APPLICABLE	RIGID COLUMN	URBIS	AXIA 2 S1	MALLATITE	TUBULAR STEEL	6	GALVANISED	STEPPED TUBULAR
46100392	COWPER AVENUE	Scunthorpe	487785.36	409364.92	7	7006	00186349	01/04/2010 00:00	5	2	BETWEEN 30-50 MPH	BACK OF FOOTPATH	0	POST TOP	NOT APPLICABLE	RIGID COLUMN	URBIS	AXIA 2 S1	MALLATITE	TUBULAR STEEL	6	GALVANISED	STEPPED TUBULAR
46100392	COWPER AVENUE	Scunthorpe	487758.76	409365.06	8	7007	00186350	01/04/2010 00:00	5	2	BETWEEN 30-50 MPH	BACK OF FOOTPATH	0	POST TOP	NOT APPLICABLE	RIGID COLUMN	URBIS	AXIA 2 S1	MALLATITE	TUBULAR STEEL	6	GALVANISED	STEPPED TUBULAR
46100392	COWPER AVENUE	Scunthorpe	487730.06	409365.48	9	7008	00186351	01/04/2010 00:00	5	2	BETWEEN 30-50 MPH	BACK OF FOOTPATH	0	POST TOP	NOT APPLICABLE	RIGID COLUMN	URBIS	AXIA 2 S1	MALLATITE	TUBULAR STEEL	6	GALVANISED	STEPPED TUBULAR
46100393	COX LANE	Crowle Parish	477083.16	413325.31	1	7000	00186353	01/04/1993 00:00	5	1	LESS THAN 30MPH	VERGE	300	SINGLE ARM	NOT APPLICABLE	RIGID COLUMN	URBIS	AXIA 2 S1	PETITJEAN	SHEET STEEL	5	GALVANISED	DAER
46100393	COX LANE	Crowle Parish	477081.82	413294.13	2	7001	00186354	01/04/1993 00:00	5	1	LESS THAN 30MPH	BACK OF FOOTPATH	300	SINGLE ARM	NOT APPLICABLE	RIGID COLUMN	URBIS	AXIA 2 S1	PETITJEAN	SHEET STEEL	5	GALVANISED	DAER
46100393	COX LANE	Crowle Parish	477090.42	413265.36	3	7002	00186355	01/04/1993 00:00	5	1	LESS THAN 30MPH	VERGE	300	SINGLE ARM	NOT APPLICABLE	RIGID COLUMN	URBIS	AXIA 2 S1	PETITJEAN	SHEET STEEL	5	GALVANISED	DAER
46100394	COXS COURT	Hibaldstow Parish	498257.75	402398	1	7000	00186356	01/04/1990 00:00	1	4	LESS THAN 30MPH	BACK OF FOOTPATH	0	POST TOP	LIGHT GREY	RIGID COLUMN	URBIS	AXIA 2 S1	PETITJEAN	SHEET STEEL	5	PAINTED	NIDD
46100394	COXS COURT	Hibaldstow Parish	498235.15	402390.25	2	7001	00186357	01/04/1990 00:00	1	4	LESS THAN 30MPH	BACK OF FOOTPATH	0	POST TOP	LIGHT GREY	RIGID COLUMN	URBIS	AXIA 2 S1	PETITJEAN	SHEET STEEL	5	PAINTED	NIDD
46100395	CRAIG CLOSE	Broughton Parish	495822.55	408832.74	1	7000	00186358	01/04/2012 00:00	1	1	LESS THAN 30MPH	BACK OF FOOTPATH	0	POST TOP	NOT APPLICABLE	RIGID COLUMN	URBIS	AXIA 2 S1	MALLATITE	TUBULAR STEEL	6	GALVANISED	TUBULAR
46100395	CRAIG CLOSE	Broughton Parish	495848.71	408856.34	2	7001	00186359	01/04/1994 00:00	1	1	LESS THAN 30MPH	BACK OF FOOTPATH	0	POST TOP	NOT APPLICABLE	RIGID COLUMN	URBIS	AXIA 2 S1	PETITJEAN	SHEET STEEL	5	GALVANISED	NIDD
46100396	CRAKEDALE ROAD	Winterton Parish	493256.03	418400.53	1	7000	00186360	01/04/1980 00:00	1	1	LESS THAN 30MPH	BACK OF FOOTPATH	0	POST TOP	MID GREY	RIGID COLUMN	URBIS	AXIA 2 S1	PETITJEAN	SHEET STEEL	5	PAINTED	NIDD
46100396	CRAKEDALE ROAD	Winterton Parish	493255.46	418373.61	2	7001	00186361	01/04/1980 00:00	1	1	LESS THAN 30MPH	BACK OF FOOTPATH	0	POST TOP	MID GREY	RIGID COLUMN	URBIS	AXIA 2 S1	PETITJEAN	SHEET STEEL	5	PAINTED	NIDD
46100396	CRAKEDALE ROAD	Winterton Parish	493247.78	418334.7	3	7002	00186362	01/04/1980 00:00	1	1	LESS THAN 30MPH	BACK OF FOOTPATH	0	POST TOP	MID GREY	RIGID COLUMN	URBIS	AXIA 2 S1	PETITJEAN	SHEET STEEL	5	PAINTED	NIDD
46100396	CRAKEDALE ROAD	Winterton Parish	493215.91	418314.45	4	7003	00186363	01/04/1980 00:00	1	1	LESS THAN 30MPH	BACK OF FOOTPATH	0	POST TOP	MID GREY	RIGID COLUMN	URBIS	AXIA 2 S1	PETITJEAN	SHEET STEEL	5	PAINTED	NIDD
46100396	CRAKEDALE ROAD	Winterton Parish	493186.15	418314.52	5	7004	00186364	01/04/1980 00:00	1	1	LESS THAN 30MPH	BACK OF FOOTPATH	0	POST TOP	MID GREY	RIGID COLUMN	URBIS	AXIA 2 S1	PETITJEAN	SHEET STEEL	5	PAINTED	NIDD
46100398	CRESTA DRIVE	Bottesford Parish	488452.61	407533.54	1	7000	00186365	09/01/2019 00:00	3	1	LESS THAN 30MPH	VERGE	0	POST TOP	NOT APPLICABLE	RIGID COLUMN	URBIS	AXIA 2 S1	MALLATITE	TUBULAR STEEL	6	GALVANISED	TUBULAR
46100398	CRESTA DRIVE	Bottesford Parish	488456.03	407572.82	2	7001	00186366	09/01/2019 00:00	3	1	LESS THAN 30MPH	VERGE	0	POST TOP	NOT APPLICABLE	RIGID COLUMN	URBIS	AXIA 2 S1	MALLATITE	TUBULAR STEEL	6	GALVANISED	TUBULAR
46100398	CRESTA DRIVE	Bottesford Parish	488450.34	407601.72	3	7002	00186367	09/01/2019 00:00	3	1	LESS THAN 30MPH	VERGE	0	POST TOP	NOT APPLICABLE	RIGID COLUMN	URBIS	AXIA 2 S1	MALLATITE	TUBULAR STEEL	6	GALVANISED	TUBULAR
46100398	CRESTA DRIVE	Bottesford Parish	488439.83	407635.88	4	7003	00186368	09/01/2019 00:00	3	1	LESS THAN 30MPH	VERGE	0	POST TOP	NOT APPLICABLE	RIGID COLUMN	URBIS	AXIA 2 S1	MALLATITE	TUBULAR STEEL	6	GALVANISED	TUBULAR
46100398	CRESTA DRIVE	Bottesford Parish	488417.93	407626.24	5	7004	00186369	09/01/2019 00:00	3	1	LESS THAN 30MPH	VERGE	0	POST TOP	NOT APPLICABLE	RIGID COLUMN	URBIS	AXIA 2 S1	MALLATITE	TUBULAR STEEL	6	GALVANISED	TUBULAR
46100399	CRISPIN WAY	Bottesford Parish	489566.1	406841.66	1	7000	00186370	01/04/1980 00:00	3	1	LESS THAN 30MPH	BACK OF FOOTPATH	0	POST TOP	MID GREY	RIGID COLUMN	URBIS	AXIA 2 S1	PETITJEAN	SHEET STEEL	5	PAINTED	NIDD
46100399	CRISPIN WAY	Bottesford Parish	489772.97	406943	10	7009	00186379	01/04/1995 00:00	3	1	LESS THAN 30MPH	VERGE	0	POST TOP	MID GREY	RIGID COLUMN	URBIS	AXIA 2 S1	FABRIKAT	TUBULAR STEEL	5	PAINTED	5M01A
46100399	CRISPIN WAY	Bottesford Parish	489771.77	406973.04	11	7010	00186380	01/04/1995 00:00	3	1	LESS THAN 30MPH	VERGE	0	POST TOP	MID GREY	RIGID COLUMN	URBIS	AXIA 2 S1	FABRIKAT	TUBULAR STEEL	5	PAINTED	5M01A
46100399	CRISPIN WAY	Bottesford Parish	489753.76	406989.44	12	7011	00186381	01/04/1995 00:00	3	1	LESS THAN 30MPH	VERGE	0	POST TOP	NOT APPLICABLE	RIGID COLUMN	URBIS	AXIA 2 S1	FABRIKAT	TUBULAR STEEL	5	GALVANISED	5M01A
46100399	CRISPIN WAY	Bottesford Parish	489597.41	406842.95	2	7001	00186371	01/04/1980 00:00	3	1	LESS THAN 30MPH	BACK OF FOOTPATH	0	POST TOP	MID GREY	RIGID COLUMN	URBIS	AXIA 2 S1	PETITJEAN	SHEET STEEL	5	PAINTED	NIDD
46100399	CRISPIN WAY	Bottesford Parish	489628.29	406855.74	3	7002	00186372	01/04/1980 00:00	3	1	LESS THAN 30MPH	BACK OF FOOTPATH	0	POST TOP	MID GREY	RIGID COLUMN	URBIS	AXIA 2 S1	PETITJEAN	SHEET STEEL	5	PAINTED	NIDD
46100399	CRISPIN WAY	Bottesford Parish	489641.54	406881.09	4	7003	00186373	01/04/1990 00:00	3	1	LESS THAN 30MPH	BACK OF FOOTPATH	0	POST TOP	MID GREY	RIGID COLUMN	URBIS	AXIA 2 S1	FABRIKAT	TUBULAR STEEL	5	PAINTED	5M01A
46100399	CRISPIN WAY	Bottesford Parish	489668.15	406887.28	5	7004	00186374	01/04/1990 00:00	3	1	LESS THAN 30MPH	BACK OF FOOTPATH	0	POST TOP	MID GREY	RIGID COLUMN	URBIS	AXIA 2 S1	FABRIKAT	TUBULAR STEEL	5	PAINTED	5M01A
46100399	CRISPIN WAY	Bottesford Parish	489684.53	406904.34	6	7005	00186375	01/04/1990 00:00	3	1	LESS THAN 30MPH	BACK OF FOOTPATH	0	POST TOP	MID GREY	RIGID COLUMN	URBIS	AXIA 2 S1	FABRIKAT	TUBULAR STEEL	5	PAINTED	5M01A
46100399	CRISPIN WAY	Bottesford Parish	489715.42	406903.74	7	7006	00186376	01/04/1990 00:00	3	1	LESS THAN 30MPH	BACK OF FOOTPATH	0	POST TOP	MID GREY	RIGID COLUMN	URBIS	AXIA 2 S1	FABRIKAT	TUBULAR STEEL	5	PAINTED	5M01A
46100399	CRISPIN WAY	Bottesford Parish	489736.14	406922.3	8	7007	00186377	01/04/1990 00:00	3	1	LESS THAN 30MPH	BACK OF FOOTPATH	0	POST TOP	MID GREY	RIGID COLUMN	URBIS	AXIA 2 S1	FABRIKAT	TUBULAR STEEL	5	PAINTED	5M01A
46100399	CRISPIN WAY	Bottesford Parish	489758.18	406934.4	9	7008	00186378	01/04/1995 00:00	3	1	LESS THAN 30MPH	VERGE	0	POST TOP	MID GREY	RIGID COLUMN	URBIS	AXIA 2 S1	FABRIKAT	TUBULAR STEEL	5	PAINTED	5M01A
46100400	CROFT LANE	Bottesford Parish	489399.72	406962.1	1FP	7004	00186386	01/04/1994 00:00	3	1	LESS THAN 30MPH	VERGE	800	SINGLE ARM	NOT APPLICABLE	RIGID COLUMN	URBIS	AXIA 2 S1	PETITJEAN	SHEET STEEL	8	GALVANISED	THAMES
46100400	CROFT LANE	Bottesford Parish	488402.95	406927.69	2	7000	00186382	01/04/1994 00:00	3	1	LESS THAN 30MPH	VERGE	800	SINGLE ARM	NOT APPLICABLE	RIGID COLUMN	URBIS	AXIA 2 S1	PETITJEAN	SHEET STEEL	6	GALVANISED	DAER
46100400	CROFT LANE	Bottesford Parish	488422.05	406896.44	3	7001	00186383	01/04/1994 00:00	3	1	LESS THAN 30MPH	VERGE	800	SINGLE ARM	NOT APPLICABLE	RIGID COLUMN	URBIS	AXIA 2 S1	PETITJEAN	SHEET STEEL	6	GALVANISED	DAER
46100400	CROFT LANE	Bottesford Parish	488424.87	406858.57	4	7002	00186384	01/04/1994 00:00	3	1	LESS THAN 30MPH	VERGE	800	SINGLE ARM	NOT APPLICABLE	RIGID COLUMN	URBIS	AXIA 2 S1	PETITJEAN	SHEET STEEL	6	GALVANISED	DAER
46100400	CROFT LANE	Bottesford Parish	488436.99	406823.7	5	7003	00186385	01/04/1994 00:00	3	1	LESS THAN 30MPH	BACK OF FOOTPATH	800	SINGLE ARM	NOT APPLICABLE	RIGID COLUMN	URBIS	AXIA 2 S1	PETITJEAN	SHEET STEEL	6	GALVANISED	DAER
46100404	CROSBY AVENUE	Scunthorpe	488771.5	412160.08	1	7000	00186388	01/04/1993 00:00	4	4	LESS THAN 30MPH	VERGE	300	SINGLE ARM	MID GREY	RIGID COLUMN	URBIS	AXIA 2 S1	PETITJEAN	SHEET STEEL	5	PAINTED	DAER
46100404	CROSBY AVENUE	Scunthorpe	488765.85	412432.07	10	7009	00186397	01/04/1993 00:00	4	4	LESS THAN 30MPH	VERGE	300	SINGLE ARM	MID GREY	RIGID COLUMN	URBIS	AXIA 2 S1	PETITJEAN	SHEET STEEL	5	PAINTED	DAER
46100404	CROSBY AVENUE	Scunthorpe	488774.19	412460.84	11	7010	00186398	01/04/1993 00:00	4	4	LESS THAN 30MPH	BACK OF FOOTPATH	300	SINGLE ARM	NOT APPLICABLE	RIGID COLUMN	URBIS	AXIA 2 S1	PETITJEAN	SHEET STEEL	5	GALVANISED	DAER
46100404	CROSBY AVENUE	Scunthorpe	488763.95	412487.24	12	7011	00186399	01/04/1993 00:00	4	4	LESS THAN 30MPH	VERGE	300	SINGLE ARM	MID GREY	RIGID COLUMN	URBIS	AXIA 2 S1	PETITJEAN	SHEET STEEL	5	PAINTED	DAER
46100404	CROSBY AVENUE	Scunthorpe	488770.51	412521.84	13	7012	00186400	01/04/1993 00:00	4	4	LESS THAN 30MPH	VERGE	300	SINGLE ARM	MID GREY	RIGID COLUMN	URBIS	AXIA 2 S1	PETITJEAN	SHEET STEEL	5	PAINTED	DAER
46100404	CROSBY AVENUE	Scunthorpe	488769.44	412551.67	14	7013	00186401	01/04/1993 00:00	4	4	LESS THAN 30MPH	VERGE	300	SINGLE ARM	MID GREY	RIGID COLUMN	URBIS	AXIA 2 S1	PETITJEAN	SHEET STEEL	5	PAINTED	DAER
46100404	CROSBY AVENUE	Scunthorpe	488761.36	412578.04	15	7014	00186402	01/04/1993 00:00	4	4	LESS THAN 30MPH	VERGE	300	SINGLE ARM	MID GREY	RIGID COLUMN	URBIS	AXIA 2 S1	PETITJEAN	SHEET STEEL	5	PAINTED	DAER
46100404	CROSBY AVENUE	Scunthorpe	488767.92	412604.98	16	7015	00186403	01/04/1993 00:00	4	4	LESS THAN 30MPH	VERGE	300	SINGLE ARM	MID GREY	RIGID COLUMN	URBIS	AXIA 2 S1	PETITJEAN	SHEET STEEL	5	PAINTED	DAER
46100404	CROSBY AVENUE	Scunthorpe	488760.38	412634.31	17	7016	00186404	01/04/1993 00:00	4	4	LESS THAN 30MPH	VERGE	300	SINGLE ARM	MID GREY	RIGID COLUMN	URBIS	AXIA 2 S1	PETITJEAN	SHEET STEEL	5	PAINTED	DAER
46100404	CROSBY AVENUE	Scunthorpe	488766.51	412666.58	18	7017	00186405	26/03/2020 00:00	4	4	LESS THAN 30MPH	VERGE	0	POST TOP	NOT APPLICABLE	RIGID COLUMN	URBIS	AXIA 2 S1	MALLATITE	TUBULAR STEEL	6	GALVANISED	TUBULAR
46100404	CROSBY AVENUE	Scunthorpe	488758.97	412693.72	19	7018	00186406	01/04/1993 00:00	4	4	LESS THAN 30MPH	VERGE	300	SINGLE ARM	MID GREY	RIGID COLUMN	URBIS	AXIA 2 S1	PETITJEAN	SHEET STEEL	5	PAINTED	DAER
46100404	CROSBY AVENUE	Scunthorpe	488777.12	412186.66	2	7001	00186389	01/04/1993 00:00	4	4	LESS THAN 30MPH	VERGE	300	SINGLE ARM	MID GREY	RIGID COLUMN	URBIS	AXIA 2 S1	PETITJEAN	SHEET STEEL	5	PAINTED	DAER
46100404	CROSBY AVENUE	Scunthorpe	488764.94	412732.36	20	7019	00186407	01/04/1993 00:00	4	4	LESS THAN 30MPH	VERGE	300	SINGLE ARM	MID GREY	RIGID COLUMN	URBIS	AXIA 2 S1	PETITJEAN	SHEET STEEL	5	PAINTED	DAER
46100404	CROSBY AVENUE	Scunthorpe	488757.68	412748.87	21	7020	00186408	01/04/1993 00:00	4	4	LESS THAN 30MPH	VERGE	300	SINGLE ARM	MID GREY	RIGID COLUMN	URBIS	AXIA 2 S1	PETITJEAN	SHEET STEEL	5	PAINTED	DAER
46100404	CROSBY AVENUE	Scunthorpe	488769.3	412211.98	3	7002	00186390	01/04/1993 00:00	4	4	LESS THAN 30MPH	VERGE	300	SINGLE ARM	MID GREY	RIGID COLUMN	URBIS	AXIA 2 S1	PETITJEAN	SHEET STEEL	5	PAINTED	DAER
46100404	CROSBY AVENUE	Scunthorpe	488776.18	412239.71	4	7003	00186391	01/04/1993 00:00	4	4	LESS THAN 30MPH	VERGE	300	SINGLE ARM	MID GREY	RIGID COLUMN	URBIS	AXIA 2 S1	PETITJEAN	SHEET STEEL	5	PAINTED	DAER
46100404	CROSBY AVENUE	Scunthorpe	488774.91	412268.86	5	7004	00186392	01/04/1993 00:00	4	4	LESS THAN 30MPH	VERGE	300	SINGLE ARM	MID GREY	RIGID COLUMN	URBIS	AXIA 2 S1	PETITJEAN	SHEET STEEL	5	PAINTED	DAER
46100404	CROSBY AVENUE	Scunthorpe	488767.1	412313.27	6	7005	00186393	01/04/1993 00:00	4	4	LESS THAN 30MPH	VERGE	300	SINGLE ARM	MID GREY	RIGID COLUMN	URBIS	AXIA 2 S1	PETITJEAN	SHEET STEEL	5	PAINTED	DAER
46100404	CROSBY AVENUE	Scunthorpe	488774.84	412330.49	7	7006	00186394	01/04/1993 00:00	4	4	LESS THAN 30MPH	VERGE	300	SINGLE ARM	MID GREY	RIGID COLUMN	URBIS	AXIA 2 S1	PETITJEAN	SHEET STEEL	5	PAINTED	DAER
46100404	CROSBY AVENUE	Scunthorpe	488766.69	412363.43	8	7007	00186395	01/04/1993 00:00	4	4	LESS THAN 30

46100434	DANE CLOSE	Broughton Parish	496161.46	409099.63	1	7000	00186572	28/02/2019 00:00	1	1	LESS THAN 30MPH	BACK OF FOOTPATH	0	POST TOP	NOT APPLICABLE	RIGID COLUMN	URBIS	AXIA 2 S1	MALLATITE	TUBULAR STEEL	6	GALVANISED	TUBULAR
46100434	DANE CLOSE	Broughton Parish	496190.32	409118.96	2	7001	00186573	01/04/2008 00:00	1	1	LESS THAN 30MPH	BACK OF FOOTPATH	0	POST TOP	NOT APPLICABLE	RIGID COLUMN	URBIS	AXIA 2 S1	BRITISH STEE	TUBULAR STEEL	6	GALVANISED	ASH
46100434	DANE CLOSE	Broughton Parish	496212.12	409134.01	3	7002	00186574	28/02/2019 00:00	1	1	LESS THAN 30MPH	BACK OF FOOTPATH	0	POST TOP	NOT APPLICABLE	RIGID COLUMN	URBIS	AXIA 2 S1	MALLATITE	TUBULAR STEEL	6	GALVANISED	TUBULAR
46100434	DANE CLOSE	Broughton Parish	496240.58	409149.35	4	7003	00186575	28/02/2019 00:00	1	1	LESS THAN 30MPH	BACK OF FOOTPATH	0	POST TOP	NOT APPLICABLE	RIGID COLUMN	URBIS	AXIA 2 S1	MALLATITE	TUBULAR STEEL	6	GALVANISED	TUBULAR
46100435	DANSON CLOSE	Barton upon Humber Parish	503957.93	421499.07	1	7000	00186576	01/04/1995 00:00	5	2	LESS THAN 30MPH	BACK OF FOOTPATH	0	POST TOP	NOT APPLICABLE	RIGID COLUMN	URBIS	AXIA 2 S1	PETITJEAN	SHEET STEEL	5	GALVANISED	NIDD
46100435	DANSON CLOSE	Barton upon Humber Parish	503982.44	421494.61	2	7001	00186577	01/04/1995 00:00	5	2	LESS THAN 30MPH	BACK OF FOOTPATH	0	POST TOP	NOT APPLICABLE	RIGID COLUMN	URBIS	AXIA 2 S1	PETITJEAN	SHEET STEEL	5	GALVANISED	NIDD
46100435	DANSON CLOSE	Barton upon Humber Parish	504004.71	421515.35	3	7002	00186578	01/04/1995 00:00	5	2	LESS THAN 30MPH	BACK OF FOOTPATH	0	POST TOP	NOT APPLICABLE	RIGID COLUMN	URBIS	AXIA 2 S1	PETITJEAN	SHEET STEEL	5	GALVANISED	NIDD
46100435	DANSON CLOSE	Barton upon Humber Parish	504005.51	421544.86	4	7003	00186579	01/04/1995 00:00	5	2	LESS THAN 30MPH	BACK OF FOOTPATH	0	POST TOP	NOT APPLICABLE	RIGID COLUMN	URBIS	AXIA 2 S1	PETITJEAN	SHEET STEEL	5	GALVANISED	NIDD
46100435	DANSON CLOSE	Barton upon Humber Parish	503999.57	421562.55	5	7004	00186580	01/04/1995 00:00	5	2	LESS THAN 30MPH	BACK OF FOOTPATH	0	POST TOP	NOT APPLICABLE	RIGID COLUMN	URBIS	AXIA 2 S1	PETITJEAN	SHEET STEEL	5	GALVANISED	NIDD
46100436	DANUM ROAD	Scunthorpe	488985.93	409748.28	1	7000	00186581	07/09/2020 00:00	5	4	LESS THAN 30MPH	VERGE	0	POST TOP	NOT APPLICABLE	RIGID COLUMN	URBIS	AXIA 2 S1	MALLATITE	TUBULAR STEEL	6	GALVANISED	TUBULAR
46100436	DANUM ROAD	Scunthorpe	488957.57	409760.26	2	7001	00186582	07/09/2020 00:00	5	4	LESS THAN 30MPH	VERGE	0	POST TOP	NOT APPLICABLE	RIGID COLUMN	URBIS	AXIA 2 S1	MALLATITE	TUBULAR STEEL	6	GALVANISED	TUBULAR
46100436	DANUM ROAD	Scunthorpe	488922.98	409766.97	3	7002	00186583	07/09/2020 00:00	5	4	LESS THAN 30MPH	VERGE	0	POST TOP	NOT APPLICABLE	RIGID COLUMN	URBIS	AXIA 2 S1	MALLATITE	TUBULAR STEEL	6	GALVANISED	TUBULAR
46100436	DANUM ROAD	Scunthorpe	488889.21	409772.79	4	7003	00186584	07/09/2020 00:00	5	4	LESS THAN 30MPH	VERGE	0	POST TOP	NOT APPLICABLE	RIGID COLUMN	URBIS	AXIA 2 S1	MALLATITE	TUBULAR STEEL	6	GALVANISED	TUBULAR
46100436	DANUM ROAD	Scunthorpe	488850.87	409769.6	5	7004	00186585	07/09/2020 00:00	5	4	LESS THAN 30MPH	VERGE	0	POST TOP	NOT APPLICABLE	RIGID COLUMN	URBIS	AXIA 2 S1	MALLATITE	TUBULAR STEEL	6	GALVANISED	TUBULAR
46100436	DANUM ROAD	Scunthorpe	488824.9	409771.99	6	7005	00186586	07/09/2020 00:00	5	4	LESS THAN 30MPH	VERGE	0	POST TOP	NOT APPLICABLE	RIGID COLUMN	URBIS	AXIA 2 S1	MALLATITE	TUBULAR STEEL	6	GALVANISED	TUBULAR
46100436	DANUM ROAD	Scunthorpe	488799.53	409781.56	7	7006	00186587	07/09/2020 00:00	5	4	LESS THAN 30MPH	VERGE	0	POST TOP	NOT APPLICABLE	RIGID COLUMN	URBIS	AXIA 2 S1	MALLATITE	TUBULAR STEEL	6	GALVANISED	TUBULAR
46100437	DARK LANE	Amcotts Parish	485587.8	414174.92	1	7003	00186591	01/04/1995 00:00	4	2	LESS THAN 30MPH	BACK OF FOOTPATH	0	POST TOP	NOT APPLICABLE	RIGID COLUMN	URBIS	AXIA 2 S1	PETITJEAN	SHEET STEEL	6	GALVANISED	NIDD
46100437	DARK LANE	Amcotts Parish	485564.15	414202.61	2	7007	00186595	01/04/1995 00:00	4	2	LESS THAN 30MPH	VERGE	0	POST TOP	NOT APPLICABLE	RIGID COLUMN	URBIS	AXIA 2 S1	PETITJEAN	SHEET STEEL	6	GALVANISED	NIDD
46100437	DARK LANE	Amcotts Parish	485545.28	414214.47	3	7000	00186588	01/04/1995 00:00	4	2	LESS THAN 30MPH	VERGE	0	POST TOP	NOT APPLICABLE	RIGID COLUMN	URBIS	AXIA 2 S1	PETITJEAN	SHEET STEEL	6	GALVANISED	NIDD
46100437	DARK LANE	Amcotts Parish	485518.46	414236.34	4	7001	00186589	01/04/1995 00:00	4	2	LESS THAN 30MPH	VERGE	0	POST TOP	NOT APPLICABLE	RIGID COLUMN	URBIS	AXIA 2 S1	PETITJEAN	SHEET STEEL	6	GALVANISED	NIDD
46100437	DARK LANE	Amcotts Parish	485489.15	414249.24	5	7002	00186590	01/04/1995 00:00	4	2	LESS THAN 30MPH	VERGE	0	POST TOP	NOT APPLICABLE	RIGID COLUMN	URBIS	AXIA 2 S1	PETITJEAN	SHEET STEEL	6	GALVANISED	NIDD
46100437	DARK LANE	Amcotts Parish	485450.1	414244.87	6	7004	00186592	13/10/2017 00:00	4	2	LESS THAN 30MPH	VERGE	0	POST TOP	NOT APPLICABLE	RIGID COLUMN	URBIS	AXIA 2 S1	MALLATITE	TUBULAR STEEL	6	GALVANISED	TUBULAR
46100437	DARK LANE	Amcotts Parish	485422.15	414241.11	7	7005	00186593	01/04/1995 00:00	4	2	LESS THAN 30MPH	BACK OF FOOTPATH	0	POST TOP	NOT APPLICABLE	RIGID COLUMN	URBIS	AXIA 2 S1	PETITJEAN	SHEET STEEL	6	GALVANISED	NIDD
46100437	DARK LANE	Amcotts Parish	485388	414242	8	7006	00186594	01/04/1995 00:00	4	2	LESS THAN 30MPH	OTHER	0	POST TOP	NOT APPLICABLE	RIGID COLUMN	URBIS	AXIA 2 S1	PETITJEAN	SHEET STEEL	6	GALVANISED	NIDD
46100438	DARTMOUTH ROAD	Scunthorpe	487562.73	409999.16	1	7000	00186596	05/10/2020 00:00	5	2	LESS THAN 30MPH	VERGE	0	POST TOP	NOT APPLICABLE	RIGID COLUMN	URBIS	AXIA 2 S1	MALLATITE	TUBULAR STEEL	6	GALVANISED	TUBULAR
46100438	DARTMOUTH ROAD	Scunthorpe	487571.32	410034.28	2	7001	00186597	05/10/2020 00:00	5	2	LESS THAN 30MPH	BACK OF FOOTPATH	0	POST TOP	NOT APPLICABLE	RIGID COLUMN	URBIS	AXIA 2 S1	MALLATITE	TUBULAR STEEL	6	GALVANISED	TUBULAR
46100439	DARWIN STREET	Kirton in Lindsey Parish	493330.36	398767.51	1	7000	00186598	01/04/1980 00:00	1	3	LESS THAN 30MPH	WALL	300	SINGLE ARM	NOT APPLICABLE	WALL MOUNTED	URBIS	AXIA 2 S1	WALL MOUN	NOT APPLICABLE	5	NOT APPLICABI	Not Applicable
46100439	DARWIN STREET	Kirton in Lindsey Parish	493303.59	398777.74	2	7001	00186599	01/04/1980 00:00	1	3	LESS THAN 30MPH	BACK OF FOOTPATH	0	POST TOP	NOT APPLICABLE	RIGID COLUMN	URBIS	AXIA 2 S1	PETITJEAN	SHEET STEEL	5	PAINTED	NIDD
46100439	DARWIN STREET	Kirton in Lindsey Parish	493267.98	398782.21	3	7002	00186600	09/01/2019 00:00	1	3	LESS THAN 30MPH	BACK OF FOOTPATH	0	POST TOP	NOT APPLICABLE	RIGID COLUMN	URBIS	AXIA 2 S1	MALLATITE	TUBULAR STEEL	6	GALVANISED	TUBULAR
46100440	DAVY AVENUE	Scunthorpe	488504.49	411482.25	1	7000	00186601	12/01/2021 00:00	6	3	LESS THAN 30MPH	BACK OF FOOTPATH	0	POST TOP	NOT APPLICABLE	RIGID COLUMN	URBIS	AXIA 2 S1	MALLATITE	TUBULAR STEEL	6	GALVANISED	TUBULAR
46100440	DAVY AVENUE	Scunthorpe	488525.11	411665.05	1	7011	00186612	01/04/2018 00:00	6	3	LESS THAN 30MPH	VERGE	0	POST TOP	NOT APPLICABLE	RIGID COLUMN	HOLOPHANE	VMAX V1 L024	MALLATITE	TUBULAR STEEL	6	GALVANISED	TUBULAR
46100440	DAVY AVENUE	Scunthorpe	488460.07	411820.15	10	7009	00186610	12/01/2021 00:00	6	3	LESS THAN 30MPH	BACK OF FOOTPATH	0	POST TOP	NOT APPLICABLE	RIGID COLUMN	URBIS	AXIA 2 S1	MALLATITE	TUBULAR STEEL	6	GALVANISED	TUBULAR
46100440	DAVY AVENUE	Scunthorpe	488463.39	411857.57	11	7010	00186611	01/04/2013 00:00	6	3	LESS THAN 30MPH	FRONT OF FOOTPATH	0	POST TOP	NOT APPLICABLE	RIGID COLUMN	URBIS	AXIA 2 S1	VALMONT ST	TUBULAR STEEL	6	GALVANISED	TUBULAR
46100440	DAVY AVENUE	Scunthorpe	488520.93	411697.07	2	7012	00186613	01/04/2018 00:00	6	3	LESS THAN 30MPH	VERGE	0	POST TOP	NOT APPLICABLE	RIGID COLUMN	HOLOPHANE	VMAX V1 L034 LED	MALLATITE	TUBULAR STEEL	6	GALVANISED	TUBULAR
46100440	DAVY AVENUE	Scunthorpe	488508.98	411518.72	2	7001	00186602	01/04/2008 00:00	6	3	LESS THAN 30MPH	FRONT OF FOOTPATH	0	POST TOP	NOT APPLICABLE	RIGID COLUMN	URBIS	AXIA 2 S1	VALMONT ST	TUBULAR STEEL	6	GALVANISED	TUBULAR
46100440	DAVY AVENUE	Scunthorpe	488493.73	411563.53	3	7002	00186603	01/04/2008 00:00	6	3	LESS THAN 30MPH	BACK OF FOOTPATH	0	POST TOP	NOT APPLICABLE	RIGID COLUMN	URBIS	AXIA 2 S1	VALMONT ST	TUBULAR STEEL	6	GALVANISED	TUBULAR
46100440	DAVY AVENUE	Scunthorpe	488534.12	411712.14	3	7013	04200333	01/04/2018 00:00	6	3	LESS THAN 30MPH	BACK OF FOOTPATH	0	POST TOP	NOT APPLICABLE	RIGID COLUMN	HOLOPHANE	VMAX V1 L024	MALLATITE	TUBULAR STEEL	6	GALVANISED	TUBULAR
46100440	DAVY AVENUE	Scunthorpe	488493.12	411598.98	4FP	7003	00186604	01/04/2010 00:00	6	3	LESS THAN 30MPH	VERGE	0	POST TOP	NOT APPLICABLE	RIGID COLUMN	URBIS	AXIA 2 S1	MALLATITE	TUBULAR STEEL	6	GALVANISED	TUBULAR
46100440	DAVY AVENUE	Scunthorpe	488488.68	411632.23	5	7004	00186605	12/01/2021 00:00	6	3	LESS THAN 30MPH	VERGE	0	POST TOP	NOT APPLICABLE	RIGID COLUMN	URBIS	AXIA 2 S1	MALLATITE	TUBULAR STEEL	6	GALVANISED	TUBULAR
46100440	DAVY AVENUE	Scunthorpe	488489.95	411673.32	6	7005	00186606	12/01/2021 00:00	6	3	LESS THAN 30MPH	BACK OF FOOTPATH	0	POST TOP	NOT APPLICABLE	RIGID COLUMN	URBIS	AXIA 2 S1	MALLATITE	TUBULAR STEEL	6	GALVANISED	TUBULAR
46100440	DAVY AVENUE	Scunthorpe	488475.18	411713.22	7	7006	00186607	01/04/2008 00:00	6	3	LESS THAN 30MPH	BACK OF FOOTPATH	0	POST TOP	NOT APPLICABLE	RIGID COLUMN	URBIS	AXIA 2 S1	VALMONT ST	TUBULAR STEEL	6	GALVANISED	TUBULAR
46100440	DAVY AVENUE	Scunthorpe	488469.07	411753.48	8	7007	00186608	01/04/1992 00:00	6	3	NOT ON A ROAD	BACK OF FOOTPATH	0	POST TOP	NOT APPLICABLE	MID HINGED	URBIS	AXIA 2 S1	PETITJEAN	SHEET STEEL	5	GALVANISED	LEVEN
46100440	DAVY AVENUE	Scunthorpe	488473.44	411785.53	9	7008	00186609	01/04/2013 00:00	6	3	NOT ON A ROAD	BACK OF FOOTPATH	0	POST TOP	NOT APPLICABLE	MID HINGED	URBIS	AXIA 2 S1	VALMONT ST	SHEET STEEL	5	GALVANISED	LEVEN
46100441	DAVY CRESCENT	Brigg Parish	500330.17	408163.91	1	7000	00186615	01/04/1993 00:00	2	3	LESS THAN 30MPH	BACK OF FOOTPATH	300	SINGLE ARM	NOT APPLICABLE	RIGID COLUMN	URBIS	AXIA 2 S1	PETITJEAN	SHEET STEEL	5	GALVANISED	DAER
46100441	DAVY CRESCENT	Brigg Parish	500299.33	408165.03	2	7001	00186616	01/04/1993 00:00	2	3	LESS THAN 30MPH	BACK OF FOOTPATH	300	SINGLE ARM	NOT APPLICABLE	RIGID COLUMN	URBIS	AXIA 2 S1	PETITJEAN	SHEET STEEL	5	GALVANISED	DAER
46100441	DAVY CRESCENT	Brigg Parish	500279.65	408155.3	3	7002	00186617	01/04/1993 00:00	2	3	LESS THAN 30MPH	BACK OF FOOTPATH	300	SINGLE ARM	NOT APPLICABLE	RIGID COLUMN	URBIS	AXIA 2 S1	PETITJEAN	SHEET STEEL	5	GALVANISED	DAER
46100442	DAWES LANE	Scunthorpe	490072.61	411481.48	1	7000	00186618	01/04/1980 00:00	4	4	LESS THAN 30MPH	VERGE	1250	SINGLE ARM	NOT APPLICABLE	RIGID COLUMN	URBIS	AXIA 2 S1	PETITJEAN	SHEET STEEL	8	GALVANISED	THAMES
46100442	DAWES LANE	Scunthorpe	490091.7	411482.74	2	7001	00186619	01/04/1980 00:00	4	4	LESS THAN 30MPH	VERGE	1250	SINGLE ARM	NOT APPLICABLE	RIGID COLUMN	URBIS	AXIA 2 S1	PETITJEAN	SHEET STEEL	8	GALVANISED	THAMES
46100442	DAWES LANE	Scunthorpe	490101.3	411490.3	3	7002	00186620	01/04/2010 00:00	4	4	LESS THAN 30MPH	VERGE	1000	SINGLE ARM	NOT APPLICABLE	RIGID COLUMN	URBIS	AXIA 2 S1	VALMONT ST	SHEET STEEL	8	GALVANISED	THAMES
46100442	DAWES LANE	Scunthorpe	490099.3	411506.96	4	7003	00186621	01/04/2010 00:00	4	4	LESS THAN 30MPH	VERGE	1000	SINGLE ARM	NOT APPLICABLE	RIGID COLUMN	URBIS	AXIA 2 S1	VALMONT ST	SHEET STEEL	8	GALVANISED	THAMES
46100442	DAWES LANE	Scunthorpe	490118.27	411513.97	5	7004	00186622	01/04/2010 00:00	4	4	LESS THAN 30MPH	FRONT OF FOOTPATH	1000	SINGLE ARM	NOT APPLICABLE	RIGID COLUMN	URBIS	AXIA 2 S1	VALMONT ST	SHEET STEEL	8	GALVANISED	THAMES
46100442	DAWES LANE	Scunthorpe	490135.51	411517.83	6	7005	00186623	01/04/1980 00:00	4	4	LESS THAN 30MPH	BACK OF FOOTPATH	1250	SINGLE ARM	NOT APPLICABLE	RIGID COLUMN	URBIS	AXIA 2 S1	PETITJEAN	SHEET STEEL	8	GALVANISED	THAMES
46100443	DAY CLOSE	Keadby with Althorpe Parish	483335.5	411051.9	1	7000	00186624	01/04/2010 00:00	4	3	LESS THAN 30MPH	BACK OF FOOTPATH	0	POST TOP	NOT APPLICABLE	RIGID COLUMN	URBIS	AXIA 2 S1	MALLATITE	TUBULAR STEEL	6	GALVANISED	TUBULAR
46100443	DAY CLOSE	Keadby with Althorpe Parish	483359.2	411021.4	10	7009	00186633	01/04/2010 00:00	4	3	LESS THAN 30MPH	BACK OF FOOTPATH	0	POST TOP	NOT APPLICABLE	MID HINGED	URBIS	AXIA 2 S1	VALMONT ST	SHEET STEEL	5	GALVANISED	LEVEN
46100443	DAY CLOSE	Keadby with Althorpe Parish	483372.1	411026.6	11	7010	00186634	01/04/2010 00:00	4	3	LESS THAN 30MPH	BACK OF FOOTPATH	0	POST TOP	NOT APPLICABLE	MID HINGED	URBIS	AXIA 2 S1	VALMONT ST	SHEET STEEL	5	GALVANISED	LEVEN
46100443	DAY CLOSE	Keadby with Althorpe Parish	483391.1	411043.7	12	7011	00186635	01/04/2010 00:00	4	3	LESS THAN 30MPH	BACK OF FOOTPATH	0	POST TOP	NOT APPLICABLE	MID HINGED	URBIS	AXIA 2 S1	VALMONT ST	SHEET STEEL	5	GALVANISED	LEVEN
46100443	DAY CLOSE	Keadby with Althorpe Parish	483334.5	411025.8	2	7001	00186625	01/04/2010 00:00	4	3	LESS THAN 30MPH	BACK OF FOOTPATH	0	POST TOP	NOT APPLICABLE	RIGID COLUMN	URBIS	AXIA 2 S1	MALLATITE	TUBULAR STEEL	6	GALVANISED	TUBULAR
46100443	DAY CLOSE	Keadby with Althorpe Parish	483306.6	411018.2	3	7002	00186626	01/04/2010 00:00	4	3	LESS THAN 30MPH	BACK OF FOOTPATH	0	POST TOP	NOT APPLICABLE	RIGID COLUMN	URBIS	AXIA 2 S1	MALLATITE	TUBULAR STEEL	6	GALVANISED	TUBULAR
46100443	DAY CLOSE	Keadby with Althorpe Parish	483326.7	411005.3	4	7003	00186627	01/04/2010 00:00	4	3	LESS THAN 30MPH	BACK OF FOOTPATH	0	POST TOP	NOT APPLICABLE	MID HINGED	URBIS	AXIA 2 S1	VALMONT ST	SHEET STEEL	5	GALVANISED	LEVEN
46100443	DAY CLOSE	Keadby with Althorpe Parish	483323.9	410976.2	5	7004	00186628	01/04/2010 00:00	4	3	LESS THAN 30MPH	BACK OF FOOTPATH	0	POST TOP	NOT APPLICABLE	MID HINGED	URBIS	AXIA 2 S1	VALMONT ST	SHEET STEEL	5	GALVANISED	LEVEN
46100443	DAY CLOSE	Keadby with Althorpe Parish	483361	410926.5	6	7005	00186629	01/04/2010 00:00	4	3	LESS THAN 30MPH	BACK OF FOOTPATH	0	POST TOP	NOT APPLICABLE	MID HINGED	URBIS	AXIA 2 S1	VALMONT ST	SHEET STEEL	5	GALVANISED	LEVEN
46100443	DAY CLOSE	Keadby with Althorpe Parish	483352.6	410960.8	7	7006	00186630	01/04/2010 00:00	4	3	LESS THAN 30MPH	BACK OF FOOTPATH	0	POST TOP	NOT APPLICABLE	MID HINGED	URBIS	AXIA 2 S1	VALMONT ST	SHEET STEEL	5	GALVANISED	LEVEN
46100443	DAY CLOSE	Keadby with Althorpe Parish	483356.2	410993.9	8	7007	00186631	01/04/2010 00:00	4	3	LESS THAN 30MPH	BACK OF FOOTPATH	0	POST TOP	NOT APPLICABLE	MID HINGED	URBIS	AXIA 2 S1	VALMONT ST	SHEET STEEL	5	GALVANISED	LEVEN
46100443	DAY CLOSE	Keadby with Althorpe Parish	483370.3	410995.9	9	7008	00186632	01/04/2010 00:00	4	3	LESS THAN 30MPH	BACK OF FOOTPATH	0	POST TOP	NOT APPLICABLE	MID HINGED	URBIS	AXIA 2 S1	VALMONT ST	SHEET STEEL	5	GALVANISED	LEVEN
46100444	DAYS CLOSE	Wrawby Parish	502007.09	409171.32	1	7000	00186636	01/04/1989 00:00	6	4	LESS THAN 30MPH	VERGE	0	POST TOP	NOT APPLICABLE	RIGID COLUMN	URBIS	AXIA 2 S1	PETITJEAN	SHEET STEEL	5	GALVANISED	NIDD
46100444	DAYS CLOSE	Wrawby Parish	502014.29	409190.62	2	7001	00186637	01/04/1989 00:00	6	4	LESS THAN 30MPH	VERGE	0	POST TOP	NOT APPLICABLE	RIGID COLUMN	URBIS	AXIA 2 S1	PETITJEAN	SHEET STEEL	5	GALVANISED	NIDD
46100445	DE ASTON SQUARE	Scunthorpe	488071.82	411326.72	1	7000	00186638	01/04/1984 00:00	6	3	LESS THAN 30MPH	BACK OF FOOTPATH	300	SINGLE ARM	MID GREY	RIGID COLUMN	URBIS	AXIA 2 S1	PETITJEAN	SHEET STEEL	5	PAINTED	DAER
46100445	DE ASTON SQUARE	Scunthorpe	488060.5	411358.37	2	7001	00186639	01/04/1984 00:00	6	3	LESS THAN 30MPH	BACK OF FOOTPATH	300	SINGLE ARM	MID GREY	RIGID COLUMN	URBIS	AXIA 2 S1	PETITJEAN	SHEET STEEL	5	PAINTED	DAER
46100446	DE LACY WAY	Winterton Parish	492111.84	418409.9	1	7000	00186640	01/04/1999 00:00	1	1	LESS THAN 30MPH	BACK OF FOOTPATH	500	SINGLE ARM	NOT APPLICABLE	RIGID COLUMN	URBIS	AXIA 2 S1	PETITJEAN	SHEET STEEL	8	GALVANISED	THAMES
46100446	DE LACY WAY	Winterton Parish	492224.92	418658.84	10	7011	00186651	01/04/1999 00:00	1	1	LESS THAN 30MPH	BACK OF FOOTPATH	500	SINGLE ARM	NOT APPLICABLE	RIGID COLUMN	URBIS	AXIA 2 S1	PETITJEAN	SHEET STEEL	8	GALVANISED	THAMES
46100446	DE LACY WAY	Winterton Parish	492250.85	418681.67	11	7012	00186652	01/04/1999 00:00	1	1	LESS THAN 30MPH	BACK OF FOOTPATH	500	SINGLE ARM	NOT APPLICABLE	RIGID COLUMN	URBIS	AXIA 2 S1	PETITJEAN	SHEET STEEL	8	GALVANISED	THAMES
46100446	DE LACY WAY	Winterton Parish	492280.55	418693.16	12	7013	00186653	01/04/1999 00:00	1	1	LESS THAN 30MPH	VERGE	500	SINGLE ARM	NOT APPLICABLE	RIGID COLUMN	URBIS	AXIA 2 S1	PETITJEAN	SHEET STEEL	8	GALVANISED	THAMES
46100446	DE LACY WAY	Winterton Parish	492319.03	418693.29	13	7014	00186654	01/04/1999 00:00	1	1	LESS THAN 30MPH	BACK OF FOOTPATH	500	SINGLE ARM	NOT APPLICABLE	RIGID COLUMN	URBIS	AXIA 2 S1	PETITJEAN	SHEET STEEL	8	GALVANISED	THAMES
46100446	DE LACY WAY	Winterton Parish	492340.35	418714.82	14	7015	00186655	01/04/1999 00:00	1	1	LESS THAN 30MPH	BACK OF FOOTPATH	500	SINGLE ARM	NOT APPLICABLE	RIGID COLUMN	URBIS	AXIA 2 S1	PETITJEAN	SHEET STEEL	8	GALVANISED	THAMES
46100446	DE LACY WAY	Winterton Parish	492366.66	418719.02	15	7016	00186656	01/04/1999 00:00	1	1	LESS THAN 30MPH	BACK OF FOOTPATH	500	SINGLE ARM	NOT APPLICABLE	RIGID COLUMN	URBIS	AXIA 2 S1	PETITJEAN	SHEET STEEL	8	GALVANISED	THAMES
46100446	DE LACY WAY	Winterton Parish	492404.93	418713.1	16	7017	00186657	01/04/1999 00:00	1	1	LESS THAN 30MPH	BACK OF FOOTPATH	500	SINGLE ARM	NOT APPLICABLE	RIGID COLUMN	URBIS	AXIA 2 S1	PETITJEAN	SHEET STEEL	8	GALVANISED	THAMES
46100446	DE LACY WAY	Winterton Parish	492444.38	418703.94	17	7018	00186658	01/04/1999 00:00	1	1	LESS THAN 30MPH	BACK OF FOOTPATH	500	SINGLE ARM	NOT APPLICABLE	RIGID COLUMN	URBIS	AXIA 2 S1	PETITJEAN	SHEET STEEL	8	GALVANISED	THAMES
46100446	DE LACY WAY	Winterton Parish	492480.17	418701.7	18	7019	00186659	01/04/1999 00:00	1	1	LESS THAN 30MPH	BACK OF FOOTPATH	500	SINGLE ARM	NOT APPLICABLE	RIGID COLUMN	URBIS	AXIA 2 S1	PETITJEAN	SHEET STEEL	8	GALVANISED	THAMES
46100446	DE LACY WAY	Winterton Parish	492506	418689.2	19	7020	00186660	01/04/1999 00:00	1	1	LESS THAN 30MPH	BACK OF FOOTPATH	500	SINGLE ARM	NOT APPLICABLE	RIGID COLUMN	URBIS	AXIA 2 S1	PETITJEAN	SHEET STEEL	8	GALVANISED	THAMES
46100446	DE LACY WAY	Winterton Parish	492104.58	418441.89	2	7002	00186642	01/04/1999 00:00	1	1	LESS THAN 30MPH	BACK OF FOOTPATH	500	SINGLE ARM	NOT APPLICABLE	RIGID COLUMN	URBIS	AXIA 2 S1	PETITJEAN	SHEET STEEL	8	GALVANISED	THAMES
46100446	DE LACY WAY	Winterton Parish	492120.08	418474.42	3	7004	00186644	01/04/1999 00:00	1	1	LESS THAN 30MPH	BACK OF FOOTPATH	500	SINGLE ARM	NOT APPLICABLE	RIGID COLUMN	URBIS	AXIA 2 S1	PETITJEAN	SHEET STEEL	8	GALVANISED	THAMES
46100446	DE LACY WAY	Winterton Parish	492135.6	418505.26	4	7005	00186645	01/04/1999 00:00	1	1	LESS THAN 30MPH	BACK OF FOOTPATH	500	SINGLE ARM	NOT APPLICABLE	RIGID COLUMN	URBIS	AXIA 2 S1	PETITJEAN	SHEET STEEL	8	GALVANISED	THAMES
46100446	DE LACY WAY	Winterton Parish	492162.57	418531.59	5	7006	00186646	01/04/1999 00:00	1	1	LESS THAN 30MPH	BACK OF FOOTPATH	500	SINGLE ARM	NOT APPLICABLE	RIGID COLUMN	URBIS	AXIA 2 S1	PETITJEAN	SHEET STEEL	8	GALVANISED	THAMES
46100446	DE LACY WAY	Winterton Parish	492180.11	418558.75	6	7007	00186647	01/04/1999 00:00	1	1	LESS THAN 30MPH	BACK OF FOOTPATH	500	SINGLE ARM	NOT APPLICABLE	RIGID COLUMN	URBIS	AXIA 2 S1	PETITJEAN	SHEET STEEL	8	GALVANISED	THAMES
46100446	DE LACY WAY	Winterton Parish	492165.81	418588.12	7	7008	00186648	01/04/1999 00:00	1	1	LESS THAN 30MPH	BACK OF FOOTPATH	500	SINGLE ARM	NOT APPLICABLE	RIGID COLUMN	URBIS	AXIA 2 S1	PETITJEAN	SHEET STEEL	8	GALVANISED	THAMES
46100446	DE LACY WAY	Winterton Parish	492180.77	418624.04	8	7009	00186649	01/04/1999 00:00	1	1	LESS THAN 30MPH	BACK OF FOOTPATH	500	SINGLE ARM	NOT APPLICABLE	RIGID COLUMN	URBIS	AXIA 2 S1	PETITJEAN	SHEET STEEL	8	GALVANISED	THAMES
46100446	DE LACY WAY	Winterton Parish	492194.17	418658.2	9	7010	00186650	01/04/1999 00:00	1	1	LESS THAN 30MPH	BACK OF FOOTPATH	500	SINGLE ARM	NOT APPLICABLE	RIGID COLUMN	URBIS	AXIA 2 S1	PETITJEAN	SHEET STEEL	8	GALVANISED	THAMES
46100447	DEACON DRIVE	Gunness Parish	486961.77	410773.63	1	7000	00186663	01/04/1988 00:00	2	2	NOT ON A ROAD	BACK OF FOOTPATH	0	POST TOP	LIGHT GREY	RIGID COLUMN	URBIS	AXIA 2 S1	PETITJEAN	SHEET STEEL	5

46100465	DONCASTER ROAD	Haxey Parish	474724.21	399578.98	13	7012	00186846	01/04/1993 00:00	6	2	BETWEEN 30-50 MPH	BACK OF FOOTPATH	800	SINGLE ARM	NOT APPLICABLE	RIGID COLUMN	URBIS	AXIA 2 S1	PETITJEAN	SHEET STEEL	6	GALVANISED	DAER	
46100465	DONCASTER ROAD	Haxey Parish	474691.04	399582.59	14	7013	00186847	01/04/1993 00:00	6	2	BETWEEN 30-50 MPH	BACK OF FOOTPATH	800	SINGLE ARM	NOT APPLICABLE	RIGID COLUMN	URBIS	AXIA 2 S1	PETITJEAN	SHEET STEEL	6	GALVANISED	DAER	
46100465	DONCASTER ROAD	Haxey Parish	474659.74	399589.68	15	7014	00186848	01/04/1993 00:00	6	2	BETWEEN 30-50 MPH	BACK OF FOOTPATH	800	SINGLE ARM	NOT APPLICABLE	RIGID COLUMN	URBIS	AXIA 2 S1	PETITJEAN	SHEET STEEL	6	GALVANISED	DAER	
46100465	DONCASTER ROAD	Haxey Parish	474623.71	399591.74	16	7015	00186849	01/04/1993 00:00	6	2	BETWEEN 30-50 MPH	BACK OF FOOTPATH	800	SINGLE ARM	NOT APPLICABLE	RIGID COLUMN	URBIS	AXIA 2 S1	PETITJEAN	SHEET STEEL	6	GALVANISED	DAER	
46100465	DONCASTER ROAD	Haxey Parish	474594.92	399595.54	17	7016	00186850	01/04/1993 00:00	6	2	BETWEEN 30-50 MPH	BACK OF FOOTPATH	800	SINGLE ARM	NOT APPLICABLE	RIGID COLUMN	URBIS	AXIA 2 S1	PETITJEAN	SHEET STEEL	6	GALVANISED	DAER	
46100465	DONCASTER ROAD	Haxey Parish	474564.77	399599.47	18	7017	00186851	01/04/1993 00:00	6	2	BETWEEN 30-50 MPH	BACK OF FOOTPATH	800	SINGLE ARM	NOT APPLICABLE	RIGID COLUMN	URBIS	AXIA 2 S1	PETITJEAN	SHEET STEEL	6	GALVANISED	DAER	
46100465	DONCASTER ROAD	Haxey Parish	474528.42	399604.04	19	7018	00186852	01/04/1993 00:00	6	2	BETWEEN 30-50 MPH	BACK OF FOOTPATH	800	SINGLE ARM	NOT APPLICABLE	RIGID COLUMN	URBIS	AXIA 2 S1	PETITJEAN	SHEET STEEL	6	GALVANISED	DAER	
46100465	DONCASTER ROAD	Haxey Parish	475075.9	399530.97	2	7001	00186835	01/04/1993 00:00	6	2	LESS THAN 30MPH	BACK OF FOOTPATH	800	SINGLE ARM	NOT APPLICABLE	RIGID COLUMN	URBIS	AXIA 2 S1	PETITJEAN	SHEET STEEL	6	GALVANISED	DAER	
46100465	DONCASTER ROAD	Haxey Parish	474495.19	399608.62	20	7019	00186853	01/04/1993 00:00	6	2	BETWEEN 30-50 MPH	BACK OF FOOTPATH	800	SINGLE ARM	NOT APPLICABLE	RIGID COLUMN	URBIS	AXIA 2 S1	PETITJEAN	SHEET STEEL	6	GALVANISED	DAER	
46100465	DONCASTER ROAD	Haxey Parish	474460.83	399613.38	21	7020	00186854	01/04/1993 00:00	6	2	BETWEEN 30-50 MPH	BACK OF FOOTPATH	800	SINGLE ARM	NOT APPLICABLE	RIGID COLUMN	URBIS	AXIA 2 S1	PETITJEAN	SHEET STEEL	6	GALVANISED	DAER	
46100465	DONCASTER ROAD	Haxey Parish	474430	399617.79	22	7021	00186855	01/04/1993 00:00	6	2	BETWEEN 30-50 MPH	BACK OF FOOTPATH	800	SINGLE ARM	NOT APPLICABLE	RIGID COLUMN	URBIS	AXIA 2 S1	PETITJEAN	SHEET STEEL	6	GALVANISED	DAER	
46100465	DONCASTER ROAD	Haxey Parish	474397.03	399622.35	23	7022	00186856	01/04/1993 00:00	6	2	BETWEEN 30-50 MPH	BACK OF FOOTPATH	800	SINGLE ARM	NOT APPLICABLE	RIGID COLUMN	URBIS	AXIA 2 S1	PETITJEAN	SHEET STEEL	6	GALVANISED	DAER	
46100465	DONCASTER ROAD	Haxey Parish	474357.21	399617.01	24	7023	00186857	01/04/1993 00:00	6	2	BETWEEN 30-50 MPH	VERGE	800	SINGLE ARM	NOT APPLICABLE	RIGID COLUMN	URBIS	AXIA 2 S1	PETITJEAN	SHEET STEEL	6	GALVANISED	DAER	
46100465	DONCASTER ROAD	Haxey Parish	474328.05	399631.84	25	7024	00186858	01/04/1993 00:00	6	2	BETWEEN 30-50 MPH	BACK OF FOOTPATH	800	SINGLE ARM	NOT APPLICABLE	RIGID COLUMN	URBIS	AXIA 2 S1	PETITJEAN	SHEET STEEL	6	GALVANISED	DAER	
46100465	DONCASTER ROAD	Haxey Parish	474294.22	399636.14	26	7025	00186859	01/04/1993 00:00	6	2	BETWEEN 30-50 MPH	BACK OF FOOTPATH	800	SINGLE ARM	NOT APPLICABLE	RIGID COLUMN	URBIS	AXIA 2 S1	PETITJEAN	SHEET STEEL	6	GALVANISED	DAER	
46100465	DONCASTER ROAD	Haxey Parish	474262.09	399640.57	27	7026	00186860	01/04/1993 00:00	6	2	BETWEEN 30-50 MPH	BACK OF FOOTPATH	800	SINGLE ARM	NOT APPLICABLE	RIGID COLUMN	URBIS	AXIA 2 S1	PETITJEAN	SHEET STEEL	6	GALVANISED	DAER	
46100465	DONCASTER ROAD	Haxey Parish	474233.42	399644.22	28	7027	00186861	14/11/2018 00:00	6	2	BETWEEN 30-50 MPH	BACK OF FOOTPATH	0	POST TOP	NOT APPLICABLE	RIGID COLUMN	URBIS	AXIA 2 S1	MALLATITE	TUBULAR STEEL	6	GALVANISED	TUBULAR	
46100465	DONCASTER ROAD	Haxey Parish	474198.94	399649.34	29	7028	00186862	01/04/1993 00:00	6	2	BETWEEN 30-50 MPH	BACK OF FOOTPATH	800	SINGLE ARM	NOT APPLICABLE	RIGID COLUMN	URBIS	AXIA 2 S1	PETITJEAN	SHEET STEEL	6	GALVANISED	DAER	
46100465	DONCASTER ROAD	Haxey Parish	475038.25	399527.75	3	7002	00186836	01/04/1993 00:00	6	2	LESS THAN 30MPH	VERGE	800	SINGLE ARM	NOT APPLICABLE	RIGID COLUMN	URBIS	AXIA 2 S1	PETITJEAN	SHEET STEEL	6	GALVANISED	DAER	
46100465	DONCASTER ROAD	Haxey Parish	474170.58	399652.88	30	7029	00186863	01/04/1993 00:00	6	2	BETWEEN 30-50 MPH	BACK OF FOOTPATH	800	SINGLE ARM	NOT APPLICABLE	RIGID COLUMN	URBIS	AXIA 2 S1	PETITJEAN	SHEET STEEL	6	GALVANISED	DAER	
46100465	DONCASTER ROAD	Haxey Parish	474133.75	399654.57	31	7030	00186864	01/04/1993 00:00	6	2	BETWEEN 30-50 MPH	VERGE	800	SINGLE ARM	NOT APPLICABLE	RIGID COLUMN	URBIS	AXIA 2 S1	PETITJEAN	SHEET STEEL	6	GALVANISED	DAER	
46100465	DONCASTER ROAD	Haxey Parish	474099.86	399650.16	32	7031	00186865	01/04/1993 00:00	6	2	BETWEEN 30-50 MPH	VERGE	800	SINGLE ARM	NOT APPLICABLE	RIGID COLUMN	URBIS	AXIA 2 S1	PETITJEAN	SHEET STEEL	6	GALVANISED	DAER	
46100465	DONCASTER ROAD	Haxey Parish	474072.45	399641.83	33	7032	00186866	01/04/1993 00:00	6	2	BETWEEN 30-50 MPH	VERGE	800	SINGLE ARM	NOT APPLICABLE	RIGID COLUMN	URBIS	AXIA 2 S1	PETITJEAN	SHEET STEEL	6	GALVANISED	DAER	
46100465	DONCASTER ROAD	Haxey Parish	474048.52	399633.76	34	7033	00186867	01/04/1993 00:00	6	2	GREATER THAN 50MPH	VERGE	800	SINGLE ARM	NOT APPLICABLE	RIGID COLUMN	URBIS	AXIA 2 S1	PETITJEAN	SHEET STEEL	6	GALVANISED	DAER	
46100465	DONCASTER ROAD	Haxey Parish	475014.56	399539.51	4	7003	00186837	01/04/1993 00:00	6	2	LESS THAN 30MPH	BACK OF FOOTPATH	800	SINGLE ARM	NOT APPLICABLE	RIGID COLUMN	URBIS	AXIA 2 S1	PETITJEAN	SHEET STEEL	6	GALVANISED	DAER	
46100465	DONCASTER ROAD	Haxey Parish	474978.41	399545.12	5	7004	00186838	01/04/1993 00:00	6	2	LESS THAN 30MPH	BACK OF FOOTPATH	800	SINGLE ARM	NOT APPLICABLE	RIGID COLUMN	URBIS	AXIA 2 S1	PETITJEAN	SHEET STEEL	6	GALVANISED	DAER	
46100465	DONCASTER ROAD	Haxey Parish	474950.66	399550.32	6	7005	00186839	01/04/1993 00:00	6	2	LESS THAN 30MPH	BACK OF FOOTPATH	800	SINGLE ARM	NOT APPLICABLE	RIGID COLUMN	URBIS	AXIA 2 S1	PETITJEAN	SHEET STEEL	6	GALVANISED	DAER	
46100465	DONCASTER ROAD	Haxey Parish	474911.05	399553.68	7	7006	00186840	01/04/1993 00:00	6	2	BETWEEN 30-50 MPH	BACK OF FOOTPATH	800	SINGLE ARM	NOT APPLICABLE	RIGID COLUMN	URBIS	AXIA 2 S1	PETITJEAN	SHEET STEEL	6	GALVANISED	DAER	
46100465	DONCASTER ROAD	Haxey Parish	474881.32	399557.82	8	7007	00186841	01/04/1993 00:00	6	2	BETWEEN 30-50 MPH	BACK OF FOOTPATH	800	SINGLE ARM	NOT APPLICABLE	RIGID COLUMN	URBIS	AXIA 2 S1	PETITJEAN	SHEET STEEL	6	GALVANISED	DAER	
46100465	DONCASTER ROAD	Haxey Parish	474851.45	399561.38	9	7008	00186842	01/04/1993 00:00	6	2	BETWEEN 30-50 MPH	BACK OF FOOTPATH	800	SINGLE ARM	NOT APPLICABLE	RIGID COLUMN	URBIS	AXIA 2 S1	PETITJEAN	SHEET STEEL	6	GALVANISED	DAER	
46100466	DONNINGTON GARDENS	Scunthorpe	488704.05	411360.22	1	7000	00186868	01/04/1991 00:00	6	3	LESS THAN 30MPH	BACK OF FOOTPATH	800	SINGLE ARM	NOT APPLICABLE	RIGID COLUMN	URBIS	AXIA 2 S1	PETITJEAN	SHEET STEEL	6	GALVANISED	DAER	
46100466	DONNINGTON GARDENS	Scunthorpe	488613.86	411407.84	10	7009	00186877	01/04/1991 00:00	6	3	LESS THAN 30MPH	BACK OF FOOTPATH	800	SINGLE ARM	NOT APPLICABLE	RIGID COLUMN	URBIS	AXIA 2 S1	PETITJEAN	SHEET STEEL	6	GALVANISED	DAER	
46100466	DONNINGTON GARDENS	Scunthorpe	488640.08	411422.86	11	7010	00186878	01/04/1991 00:00	6	3	LESS THAN 30MPH	BACK OF FOOTPATH	800	SINGLE ARM	NOT APPLICABLE	RIGID COLUMN	URBIS	AXIA 2 S1	PETITJEAN	SHEET STEEL	6	GALVANISED	DAER	
46100466	DONNINGTON GARDENS	Scunthorpe	488668.12	411416.49	12	7011	00186879	01/04/1991 00:00	6	3	LESS THAN 30MPH	BACK OF FOOTPATH	800	SINGLE ARM	NOT APPLICABLE	RIGID COLUMN	URBIS	AXIA 2 S1	PETITJEAN	SHEET STEEL	6	GALVANISED	DAER	
46100466	DONNINGTON GARDENS	Scunthorpe	488688.23	411419.53	13	7012	00186880	01/04/1991 00:00	6	3	LESS THAN 30MPH	BACK OF FOOTPATH	800	SINGLE ARM	NOT APPLICABLE	RIGID COLUMN	URBIS	AXIA 2 S1	PETITJEAN	SHEET STEEL	6	GALVANISED	DAER	
46100466	DONNINGTON GARDENS	Scunthorpe	488678.55	411366.9	2	7001	00186869	01/04/1991 00:00	6	3	LESS THAN 30MPH	BACK OF FOOTPATH	800	SINGLE ARM	NOT APPLICABLE	RIGID COLUMN	URBIS	AXIA 2 S1	PETITJEAN	SHEET STEEL	6	GALVANISED	DAER	
46100466	DONNINGTON GARDENS	Scunthorpe	488650.58	411351.68	3	7002	00186870	01/04/1991 00:00	6	3	LESS THAN 30MPH	BACK OF FOOTPATH	800	SINGLE ARM	NOT APPLICABLE	RIGID COLUMN	URBIS	AXIA 2 S1	PETITJEAN	SHEET STEEL	6	GALVANISED	DAER	
46100466	DONNINGTON GARDENS	Scunthorpe	488621.67	411357.83	4	7003	00186871	01/04/1991 00:00	6	3	LESS THAN 30MPH	BACK OF FOOTPATH	800	SINGLE ARM	NOT APPLICABLE	RIGID COLUMN	URBIS	AXIA 2 S1	PETITJEAN	SHEET STEEL	6	GALVANISED	DAER	
46100466	DONNINGTON GARDENS	Scunthorpe	488594.81	411342.17	5	7004	00186872	01/04/1991 00:00	6	3	LESS THAN 30MPH	BACK OF FOOTPATH	800	SINGLE ARM	NOT APPLICABLE	RIGID COLUMN	URBIS	AXIA 2 S1	PETITJEAN	SHEET STEEL	6	GALVANISED	DAER	
46100466	DONNINGTON GARDENS	Scunthorpe	488567.8	411343.04	6	7005	00186873	01/04/1991 00:00	6	3	LESS THAN 30MPH	BACK OF FOOTPATH	800	SINGLE ARM	NOT APPLICABLE	RIGID COLUMN	URBIS	AXIA 2 S1	PETITJEAN	SHEET STEEL	6	GALVANISED	DAER	
46100466	DONNINGTON GARDENS	Scunthorpe	488558.25	411373.68	7	7006	00186874	01/04/1991 00:00	6	3	LESS THAN 30MPH	BACK OF FOOTPATH	800	SINGLE ARM	NOT APPLICABLE	RIGID COLUMN	URBIS	AXIA 2 S1	PETITJEAN	SHEET STEEL	6	GALVANISED	DAER	
46100466	DONNINGTON GARDENS	Scunthorpe	488557.34	411404.94	8	7007	00186875	01/04/1991 00:00	6	3	LESS THAN 30MPH	BACK OF FOOTPATH	800	SINGLE ARM	NOT APPLICABLE	RIGID COLUMN	URBIS	AXIA 2 S1	PETITJEAN	SHEET STEEL	6	GALVANISED	DAER	
46100466	DONNINGTON GARDENS	Scunthorpe	488582.53	411413.74	9	7008	00186876	01/04/1991 00:00	6	3	LESS THAN 30MPH	BACK OF FOOTPATH	800	SINGLE ARM	NOT APPLICABLE	RIGID COLUMN	URBIS	AXIA 2 S1	PETITJEAN	SHEET STEEL	6	GALVANISED	DAER	
46100467	DONVILLE ROAD	Eastoft Parish	480563.05	416122.52	1FP	7005	00186886	01/04/2004 00:00	4	3	LESS THAN 30MPH	BACK OF FOOTPATH	0	POST TOP	NOT APPLICABLE	RIGID COLUMN	URBIS	AXIA 2 S1	MALLATITE	TUBULAR STEEL	5	GALVANISED	STEPPED TUBULAR	
46100467	DONVILLE ROAD	Eastoft Parish	480521.16	416113.13	2	7000	00186881	01/04/2004 00:00	4	3	LESS THAN 30MPH	BACK OF FOOTPATH	0	POST TOP	2 NOT APPLICABLE	RIGID COLUMN	URBIS	AXIA 2 S1	MALLATITE	TUBULAR STEEL	5	GALVANISED	STEPPED TUBULAR	
46100467	DONVILLE ROAD	Eastoft Parish	480498.51	416089.62	3	7001	00186882	01/04/2004 00:00	4	3	LESS THAN 30MPH	BACK OF FOOTPATH	0	POST TOP	NOT APPLICABLE	RIGID COLUMN	URBIS	AXIA 2 S1	MALLATITE	TUBULAR STEEL	5	GALVANISED	STEPPED TUBULAR	
46100467	DONVILLE ROAD	Eastoft Parish	480462.04	416070.17	4	7002	00186883	01/04/2004 00:00	4	3	LESS THAN 30MPH	BACK OF FOOTPATH	0	POST TOP	NOT APPLICABLE	RIGID COLUMN	URBIS	AXIA 2 S1	MALLATITE	TUBULAR STEEL	5	GALVANISED	STEPPED TUBULAR	
46100467	DONVILLE ROAD	Eastoft Parish	480432.19	416055.18	5	7003	00186884	01/04/2004 00:00	4	3	LESS THAN 30MPH	BACK OF FOOTPATH	0	POST TOP	NOT APPLICABLE	RIGID COLUMN	URBIS	AXIA 2 S1	MALLATITE	TUBULAR STEEL	5	GALVANISED	STEPPED TUBULAR	
46100467	DONVILLE ROAD	Eastoft Parish	480410.69	416049.8	6	7004	00186885	01/04/2004 00:00	4	3	LESS THAN 30MPH	BACK OF FOOTPATH	0	POST TOP	NOT APPLICABLE	RIGID COLUMN	URBIS	AXIA 2 S1	MALLATITE	TUBULAR STEEL	5	GALVANISED	STEPPED TUBULAR	
46100468	DORCHESTER ROAD	Scunthorpe	487325.68	409530.16	1	7000	00186887	01/04/1980 00:00	5	2	LESS THAN 30MPH	FRONT OF FOOTPATH	300	SINGLE ARM	NOT APPLICABLE	RIGID COLUMN	URBIS	AXIA 2 S1	PETITJEAN	SHEET STEEL	5	GALVANISED	DAER	
46100468	DORCHESTER ROAD	Scunthorpe	487355.01	409523.55	2	7001	00186888	17/09/2020 00:00	5	2	LESS THAN 30MPH	BACK OF FOOTPATH	0	POST TOP	NOT APPLICABLE	RIGID COLUMN	URBIS	AXIA 2 S1	MALLATITE	TUBULAR STEEL	6	GALVANISED	TUBULAR	
46100468	DORCHESTER ROAD	Scunthorpe	487387.97	409529.82	3	7002	00186889	17/09/2020 00:00	5	2	LESS THAN 30MPH	BACK OF FOOTPATH	0	POST TOP	NOT APPLICABLE	RIGID COLUMN	URBIS	AXIA 2 S1	MALLATITE	TUBULAR STEEL	6	GALVANISED	TUBULAR	
46100468	DORCHESTER ROAD	Scunthorpe	487408.28	409523.41	4	7003	00186890	17/09/2020 00:00	5	2	LESS THAN 30MPH	BACK OF FOOTPATH	0	POST TOP	NOT APPLICABLE	RIGID COLUMN	URBIS	AXIA 2 S1	MALLATITE	TUBULAR STEEL	6	GALVANISED	TUBULAR	
46100468	DORCHESTER ROAD	Scunthorpe	487445.68	409529.66	5	7004	00186891	17/09/2020 00:00	5	2	LESS THAN 30MPH	BACK OF FOOTPATH	0	POST TOP	NOT APPLICABLE	RIGID COLUMN	URBIS	AXIA 2 S1	MALLATITE	TUBULAR STEEL	6	GALVANISED	TUBULAR	
46100469	DOVEDALE CLOSE	Winterton Parish	492614.04	419079.71	1	7000	00186892	01/04/1995 00:00	1	1	LESS THAN 30MPH	VERGE	0	POST TOP	NOT APPLICABLE	RIGID COLUMN	URBIS	AXIA 2 S1	PETITJEAN	TUBULAR STEEL	5	GALVANISED	METRO	
46100469	DOVEDALE CLOSE	Winterton Parish	492621.03	419100.95	2	7001	00186893	01/04/1995 00:00	1	1	LESS THAN 30MPH	VERGE	0	POST TOP	NOT APPLICABLE	RIGID COLUMN	URBIS	AXIA 2 S1	PETITJEAN	TUBULAR STEEL	5	GALVANISED	METRO	
46100469	DOVEDALE CLOSE	Winterton Parish	492619.42	419115.46	3	7002	00186894	01/04/1995 00:00	1	1	LESS THAN 30MPH	VERGE	0	POST TOP	NOT APPLICABLE	RIGID COLUMN	URBIS	AXIA 2 S1	PETITJEAN	TUBULAR STEEL	5	GALVANISED	METRO	
46100470	DOVEDALE ROAD	Scunthorpe	490911.28	408549.82	1	7000	00186895	01/04/2008 00:00	1	3	BETWEEN 30-50 MPH	BACK OF FOOTPATH	0	POST TOP	NOT APPLICABLE	RIGID COLUMN	URBIS	AXIA 2 S1	MALLATITE	TUBULAR STEEL	6	GALVANISED	STEPPED TUBULAR	
46100470	DOVEDALE ROAD	Scunthorpe	490911.56	408523.22	2	7001	00186896	01/04/2008 00:00	1	3	BETWEEN 30-50 MPH	BACK OF FOOTPATH	0	POST TOP	NOT APPLICABLE	RIGID COLUMN	URBIS	AXIA 2 S1	MALLATITE	TUBULAR STEEL	6	GALVANISED	STEPPED TUBULAR	
46100470	DOVEDALE ROAD	Scunthorpe	490903.16	408490.18	3	7002	00186897	01/04/2008 00:00	1	3	BETWEEN 30-50 MPH	BACK OF FOOTPATH	0	POST TOP	NOT APPLICABLE	RIGID COLUMN	URBIS	AXIA 2 S1	MALLATITE	TUBULAR STEEL	6	GALVANISED	STEPPED TUBULAR	
46100470	DOVEDALE ROAD	Scunthorpe	490903.16	408466.24	4	7003	00186898	01/04/2008 00:00	1	3	BETWEEN 30-50 MPH	BACK OF FOOTPATH	0	POST TOP	NOT APPLICABLE	RIGID COLUMN	URBIS	AXIA 2 S1	MALLATITE	TUBULAR STEEL	6	GALVANISED	STEPPED TUBULAR	
46100470	DOVEDALE ROAD	Scunthorpe	490903.86	408432.22	5	7004	00186899	01/04/2008 00:00	1	3	BETWEEN 30-50 MPH	BACK OF FOOTPATH	0	POST TOP	NOT APPLICABLE	RIGID COLUMN	URBIS	AXIA 2 S1	MALLATITE	TUBULAR STEEL	6	GALVANISED	STEPPED TUBULAR	
46100470	DOVEDALE ROAD	Scunthorpe	490910.72	408401.98	6	7005	00186900	01/04/2008 00:00	1	3	BETWEEN 30-50 MPH	BACK OF FOOTPATH	0	POST TOP	NOT APPLICABLE	RIGID COLUMN	URBIS	AXIA 2 S1	MALLATITE	TUBULAR STEEL	6	GALVANISED	STEPPED TUBULAR	
46100470	DOVEDALE ROAD	Scunthorpe	490904.14	408378.74	7	7006	00186901	01/04/2008 00:00	1	3	BETWEEN 30-50 MPH	BACK OF FOOTPATH	0	POST TOP	NOT APPLICABLE	RIGID COLUMN	URBIS	AXIA 2 S1	MALLATITE	TUBULAR STEEL	6	GALVANISED	STEPPED TUBULAR	
46100471	DOWSE AVENUE	Scunthorpe	488087.06	411459.91	1	7000	00186902	01/04/1993 00:00	6	3	LESS THAN 30MPH	BACK OF FOOTPATH	300	SINGLE ARM	NOT APPLICABLE	RIGID COLUMN	URBIS	AXIA 2 S1	PETITJEAN	SHEET STEEL	6	GALVANISED	DAER	
46100471	DOWSE AVENUE	Scunthorpe	488110.28	411483.43	2	7001	00186903	01/04/1993 00:00	6	3	LESS THAN 30MPH	BACK OF FOOTPATH	300	SINGLE ARM	NOT APPLICABLE	RIGID COLUMN	URBIS	AXIA 2 S1	PETITJEAN	SHEET STEEL	6	GALVANISED	DAER	
46100471	DOWSE AVENUE	Scunthorpe	488112.57	411514.86	3	7002	00186904	01/04/1993 00:00	6	3	LESS THAN 30MPH	BACK OF FOOTPATH	300	SINGLE ARM	NOT APPLICABLE	RIGID COLUMN	URBIS	AXIA 2 S1	PETITJEAN	SHEET STEEL	6	GALVANISED	DAER	
46100471	DOWSE AVENUE	Scunthorpe	488135.8	411539.27	4	7003	00186905	01/04/1993 00:00	6	3	LESS THAN 30MPH	BACK OF FOOTPATH	300	SINGLE ARM	NOT APPLICABLE	RIGID COLUMN	URBIS	AXIA 2 S1	PETITJEAN	SHEET STEEL	6	GALVANISED	DAER	
46100471	DOWSE AVENUE	Scunthorpe	488140.45	411573.46	5	7004	00186906	01/04/1993 00:00	6	3	LESS THAN 30MPH	BACK OF FOOTPATH	300	SINGLE ARM	NOT APPLICABLE	RIGID COLUMN	URBIS	AXIA 2 S1	PETITJEAN	SHEET STEEL	6	GALVANISED	DAER	
46100471	DOWSE AVENUE	Scunthorpe	488162.24	411595.78	6	7005	00186907	01/04/1993 00:00	6	3	LESS THAN 30MPH	BACK OF FOOTPATH	300	SINGLE ARM	NOT APPLICABLE	RIGID COLUMN	URBIS	AXIA 2 S1	PETITJEAN	SHEET STEEL	6	GALVANISED	DAER	
46100471	DOWSE AVENUE	Scunthorpe	488164.65	411625.15	7	7006	00186908	01/04/1993 00:00	6	3	LESS THAN 30MPH	BACK OF FOOTPATH	300	SINGLE ARM	NOT APPLICABLE	RIGID COLUMN	URBIS	AXIA 2 S1	PETITJEAN	SHEET STEEL	6	GALVANISED	DAER	
46100471	DOWSE AVENUE	Scunthorpe	488181.94	411651.63	8	7007	00186909	01/04/1993 00:00	6	3	LESS THAN 30MPH	BACK OF FOOTPATH	300	SINGLE ARM	NOT APPLICABLE	RIGID COLUMN	URBIS	AXIA 2 S1	PETITJEAN	SHEET STEEL	6	GALVANISED	DAER	
46100471	DOWSE AVENUE	Scunthorpe	488208.19	411658.22	9	7008	00186910	01/04/1993 00:00	6	3	LESS THAN 30MPH	BACK OF FOOTPATH	300	SINGLE ARM	NOT APPLICABLE	RIGID COLUMN	URBIS	AXIA 2 S1	PETITJEAN	SHEET STEEL	6	GALVANISED	DAER	
46100472	DRAGONBY ROAD	Scunthorpe	488424.25	407979.8	1	7000	00186911	01/04/2020 00:00	3	4	LESS THAN 30MPH	BACK OF FOOTPATH	0	POST TOP	NOT APPLICABLE	RIGID COLUMN	URBIS	AXIA 2 S1	MALLATITE	TUBULAR STEEL	6	GALVANISED	TUBULAR	
46100472	DRAGONBY ROAD	Scunthorpe	488428.45	407942.13	2	7001	00186912	01/04/2020 00:00	3	4	LESS THAN 30MPH	BACK OF FOOTPATH	0	POST TOP	NOT APPLICABLE	RIGID COLUMN	URBIS	AXIA 2 S1	MALLATITE	TUBULAR STEEL	6	GALVANISED	TUBULAR	
46100472	DRAGONBY ROAD	Scunthorpe	488445.93	407920.9	3	7002	00186913	01/04/2020 00:00	3	4	LESS THAN 30MPH	BACK OF FOOTPATH	0	POST TOP	NOT APPLICABLE	RIGID COLUMN	URBIS	AXIA 2 S1	MALLATITE	TUBULAR STEEL	6	GALVANISED	TUBULAR	
46100472	DRAGONBY ROAD	Scunthorpe	488452.16	407883.59	4	7003	00186914	01/04/2020 00:00	3	4	LESS THAN 30MPH	BACK OF FOOTPATH	0	POST TOP	NOT APPLICABLE	RIGID COLUMN	URBIS	AXIA 2 S1	MALLATITE	TUBULAR STEEL	6	GALVANISED	TUBULAR	
46100472	DRAGONBY ROAD	Scunthorpe	488474.43	407853.82	5	7004	00186915	01/04/2020 00:00	3	4	LESS THAN 30MPH	BACK OF FOOTPATH	0	POST TOP	NOT APPLICABLE	RIGID COLUMN	URBIS	AXIA 2 S1	MALLATITE	TUBULAR STEEL	6	GALVANISED	TUBULAR	
46100472	DRAGONBY ROAD	Scunthorpe	488496.77	407826.43	6	7005	00186916	01/04/2020 00:00	3	4	NOT ON A ROAD	BACK OF FOOTPATH	0	POST TOP	NOT APPLICABLE	MID HINGED	URBIS	AXIA 2 S1	MALLATITE	TUBULAR STEEL	6	GALVANISED	LEVEN	
46100473	DRIFFIL WAY	Winterton Parish	492283.33	418107.38	1	7000	00186917	01/03/2019 00:00	1	1	LESS THAN 30MPH	BACK OF FOOTPATH	0	POST TOP	NOT APPLICABLE	RIGID COLUMN	URBIS	AXIA 2 S1	MALLATITE	TUBULAR STEEL	6	GALVANISED	TUBULAR	
46100473	DRIFFIL WAY	Winterton Parish	492268.52	418075.27	2	7001	00186918	01/03/2019 00:00	1	1	LESS THAN 30MPH	BACK OF FOOTPATH	0	POST TOP	NOT APPLICABLE	RIGID COLUMN	URBIS	AXIA 2 S1	MALLATITE	TUBULAR STEEL	6	GALVANISED	TUBULAR	
46100474	DRYDEN ROAD	Scunthorpe	487761.72	408414.72	1	7000	00186919	01/04/2008 00:00	5	2	BETWEEN 30-50 MPH	BACK OF FOOTPATH	500	SINGLE ARM	NOT APPLICABLE	RIGID COLUMN	URBIS	AXIA 2 S1	MALLATITE	SHEET STEEL	8	GALVANISED	THAMES	
46100474	DRYDEN ROAD	Scunthorpe	487731.76	408718.24	10	7009	00186928	01/04/2008 00:00	5	2	BETWEEN 30-50 MPH	BACK OF FOOTPATH	500	SINGLE ARM	NOT APPLICABLE	RIGID COLUMN	URBIS	AXIA 2 S1	MALLATITE	SHEET STEEL	8	GALVANISED	THAMES	
46100474	DRYDEN ROAD	Scunthorpe	487721.54	408741.2	11	7010	00186929	01/04/2008 00:00	5	2	BETWEEN 30-50 MPH	BACK OF FOOTPATH	500	SINGLE ARM	NOT APPLICABLE	RIGID COLUMN	URBIS	AXIA 2 S1	MALLATITE	SHEET STEEL	8	GALVANISED	THAMES	
46100474	DRYDEN ROAD	Scunthorpe	487730.5	408764.72	12	7011	00186930	01/04/2008 00:00	5	2	BETWEEN 30-50 MPH	BACK OF FOOTPATH	500	SINGLE ARM	NOT APPLICABLE	RIGID COLUMN	URBIS	AXIA 2 S1	MALLATITE	SHEET STEEL	8	GALVANISED	THAMES	
46100474	DRYDEN ROAD	Sc

46100493	EAST DALE DRIVE	Kirton in Lindsey Parish	493328.97	398961.1	4	7003	00187090	01/04/2004 00:00	1	3	LESS THAN 30MPH	VERGE	0	POST TOP	NOT APPLICABLE	RIGID COLUMN	URBIS	AXIA 2 S1	BEI	TUBULAR STEEL	6	GALVANISED	STEPPED TUBULAR
46100493	EAST DALE DRIVE	Kirton in Lindsey Parish	493313.33	398989.02	5	7004	00187091	01/04/2004 00:00	1	3	LESS THAN 30MPH	VERGE	0	POST TOP	NOT APPLICABLE	RIGID COLUMN	URBIS	AXIA 2 S1	BEI	TUBULAR STEEL	6	GALVANISED	STEPPED TUBULAR
46100493	EAST DALE DRIVE	Kirton in Lindsey Parish	493307.07	399025.88	6	7005	00187092	01/04/2002 00:00	1	3	NOT ON A ROAD	BACK OF FOOTPATH	0	POST TOP	NOT APPLICABLE	MID HINGED	URBIS	AXIA 2 S1	PETITJEAN	SHEET STEEL	5	GALVANISED	LEVEN
46100493	EAST DALE DRIVE	Kirton in Lindsey Parish	493280.97	399014.37	7	7006	00187093	01/04/2004 00:00	1	3	LESS THAN 30MPH	BACK OF FOOTPATH	0	POST TOP	NOT APPLICABLE	RIGID COLUMN	URBIS	AXIA 2 S1	BEI	TUBULAR STEEL	6	GALVANISED	STEPPED TUBULAR
46100493	EAST DALE DRIVE	Kirton in Lindsey Parish	493245.29	399026.22	8	7007	00187094	01/04/2004 00:00	1	3	LESS THAN 30MPH	VERGE	0	POST TOP	NOT APPLICABLE	RIGID COLUMN	URBIS	AXIA 2 S1	BEI	TUBULAR STEEL	6	GALVANISED	STEPPED TUBULAR
46100493	EAST DALE DRIVE	Kirton in Lindsey Parish	493217.45	399045.71	9	7008	00187095	01/04/2004 00:00	1	3	LESS THAN 30MPH	BACK OF FOOTPATH	0	POST TOP	NOT APPLICABLE	RIGID COLUMN	URBIS	AXIA 2 S1	BEI	TUBULAR STEEL	6	GALVANISED	STEPPED TUBULAR
46100494	EASTFIELD ROAD	Barton upon Humber Parish	503450.31	421429.93	1	7000	00187096	01/04/1993 00:00	5	2	LESS THAN 30MPH	BACK OF FOOTPATH	800	SINGLE ARM	NOT APPLICABLE	RIGID COLUMN	URBIS	AXIA 2 S1	PETITJEAN	SHEET STEEL	6	GALVANISED	DAER
46100494	EASTFIELD ROAD	Barton upon Humber Parish	503515.3	421185.3	10	7009	00187105	01/04/1993 00:00	5	2	LESS THAN 30MPH	BACK OF FOOTPATH	800	SINGLE ARM	NOT APPLICABLE	RIGID COLUMN	URBIS	AXIA 2 S1	PETITJEAN	SHEET STEEL	6	GALVANISED	DAER
46100494	EASTFIELD ROAD	Barton upon Humber Parish	503524.43	421159.78	11	7010	00187106	30/07/2024 00:00	5	2	LESS THAN 30MPH	BACK OF FOOTPATH	800	SINGLE ARM	NOT APPLICABLE	RIGID COLUMN	URBIS	AXIA 2 S1	MALLATITE	TUBULAR STEEL	6	GALVANISED	TUBULAR
46100494	EASTFIELD ROAD	Barton upon Humber Parish	503536.44	421125.54	12	7011	00187107	01/04/1993 00:00	5	2	LESS THAN 30MPH	BACK OF FOOTPATH	800	SINGLE ARM	NOT APPLICABLE	RIGID COLUMN	URBIS	AXIA 2 S1	PETITJEAN	SHEET STEEL	6	GALVANISED	DAER
46100494	EASTFIELD ROAD	Barton upon Humber Parish	503545.84	421095.84	13	7012	00187108	01/04/1993 00:00	5	2	LESS THAN 30MPH	BACK OF FOOTPATH	800	SINGLE ARM	NOT APPLICABLE	RIGID COLUMN	URBIS	AXIA 2 S1	PETITJEAN	SHEET STEEL	6	GALVANISED	DAER
46100494	EASTFIELD ROAD	Barton upon Humber Parish	503554.31	421070.14	14	7013	00187109	01/04/1993 00:00	5	2	LESS THAN 30MPH	BACK OF FOOTPATH	800	SINGLE ARM	NOT APPLICABLE	RIGID COLUMN	URBIS	AXIA 2 S1	PETITJEAN	SHEET STEEL	6	GALVANISED	DAER
46100494	EASTFIELD ROAD	Barton upon Humber Parish	503563.08	421042.24	15	7014	00187110	01/04/1993 00:00	5	2	LESS THAN 30MPH	BACK OF FOOTPATH	800	SINGLE ARM	NOT APPLICABLE	RIGID COLUMN	URBIS	AXIA 2 S1	PETITJEAN	SHEET STEEL	6	GALVANISED	DAER
46100494	EASTFIELD ROAD	Barton upon Humber Parish	503573.26	421010.38	16	7015	00187111	01/04/1993 00:00	5	2	LESS THAN 30MPH	BACK OF FOOTPATH	800	SINGLE ARM	NOT APPLICABLE	RIGID COLUMN	URBIS	AXIA 2 S1	PETITJEAN	SHEET STEEL	6	GALVANISED	DAER
46100494	EASTFIELD ROAD	Barton upon Humber Parish	503583.61	420979.31	17	7016	00187112	01/04/1993 00:00	5	2	LESS THAN 30MPH	VERGE	800	SINGLE ARM	NOT APPLICABLE	RIGID COLUMN	URBIS	AXIA 2 S1	PETITJEAN	SHEET STEEL	6	GALVANISED	DAER
46100494	EASTFIELD ROAD	Barton upon Humber Parish	503446.1	421397.39	2	7001	00187097	01/04/1993 00:00	5	2	LESS THAN 30MPH	BACK OF FOOTPATH	800	SINGLE ARM	NOT APPLICABLE	RIGID COLUMN	URBIS	AXIA 2 S1	PETITJEAN	SHEET STEEL	6	GALVANISED	DAER
46100494	EASTFIELD ROAD	Barton upon Humber Parish	503455.74	421368.69	3	7002	00187098	01/04/1993 00:00	5	2	LESS THAN 30MPH	BACK OF FOOTPATH	800	SINGLE ARM	NOT APPLICABLE	RIGID COLUMN	URBIS	AXIA 2 S1	PETITJEAN	SHEET STEEL	6	GALVANISED	DAER
46100494	EASTFIELD ROAD	Barton upon Humber Parish	503450.69	421347.12	4	7003	00187099	01/04/1993 00:00	5	2	LESS THAN 30MPH	BACK OF FOOTPATH	800	SINGLE ARM	NOT APPLICABLE	RIGID COLUMN	URBIS	AXIA 2 S1	PETITJEAN	SHEET STEEL	6	GALVANISED	DAER
46100494	EASTFIELD ROAD	Barton upon Humber Parish	503459.59	421320.72	5	7004	00187100	01/04/1993 00:00	5	2	LESS THAN 30MPH	BACK OF FOOTPATH	800	SINGLE ARM	NOT APPLICABLE	RIGID COLUMN	URBIS	AXIA 2 S1	PETITJEAN	SHEET STEEL	6	GALVANISED	DAER
46100494	EASTFIELD ROAD	Barton upon Humber Parish	503473.13	421301.61	6	7005	00187101	01/04/1993 00:00	5	2	LESS THAN 30MPH	BACK OF FOOTPATH	800	SINGLE ARM	NOT APPLICABLE	RIGID COLUMN	URBIS	AXIA 2 S1	PETITJEAN	SHEET STEEL	6	GALVANISED	DAER
46100494	EASTFIELD ROAD	Barton upon Humber Parish	503481.12	421274.74	7	7006	00187102	01/04/1993 00:00	5	2	LESS THAN 30MPH	BACK OF FOOTPATH	800	SINGLE ARM	NOT APPLICABLE	RIGID COLUMN	URBIS	AXIA 2 S1	PETITJEAN	SHEET STEEL	6	GALVANISED	DAER
46100494	EASTFIELD ROAD	Barton upon Humber Parish	503492.55	421244.12	8	7007	00187103	01/04/1993 00:00	5	2	LESS THAN 30MPH	BACK OF FOOTPATH	800	SINGLE ARM	NOT APPLICABLE	RIGID COLUMN	URBIS	AXIA 2 S1	PETITJEAN	SHEET STEEL	6	GALVANISED	DAER
46100494	EASTFIELD ROAD	Barton upon Humber Parish	503502.33	421218.57	9	7008	00187104	01/04/1993 00:00	5	2	LESS THAN 30MPH	BACK OF FOOTPATH	800	SINGLE ARM	NOT APPLICABLE	RIGID COLUMN	URBIS	AXIA 2 S1	PETITJEAN	SHEET STEEL	6	GALVANISED	DAER
46100495	EASTFIELD ROAD	Brigg Parish	500518.06	407356.65	1	7000	00187113	27/08/2019 00:00	2	3	LESS THAN 30MPH	BACK OF FOOTPATH	0	POST TOP	NOT APPLICABLE	RIGID COLUMN	URBIS	AXIA 2 S1	MALLATITE	TUBULAR STEEL	6	GALVANISED	TUBULAR
46100495	EASTFIELD ROAD	Brigg Parish	500556.28	407367.63	2	7001	00187114	27/08/2019 00:00	2	3	LESS THAN 30MPH	BACK OF FOOTPATH	0	POST TOP	NOT APPLICABLE	RIGID COLUMN	URBIS	AXIA 2 S1	MALLATITE	TUBULAR STEEL	6	GALVANISED	TUBULAR
46100495	EASTFIELD ROAD	Brigg Parish	500594.21	407379.22	3	7002	00187115	27/08/2019 00:00	2	3	LESS THAN 30MPH	BACK OF FOOTPATH	0	POST TOP	NOT APPLICABLE	RIGID COLUMN	URBIS	AXIA 2 S1	MALLATITE	TUBULAR STEEL	6	GALVANISED	TUBULAR
46100495	EASTFIELD ROAD	Brigg Parish	500624.86	407397.6	4	7003	00187116	27/08/2019 00:00	2	3	LESS THAN 30MPH	BACK OF FOOTPATH	0	POST TOP	NOT APPLICABLE	RIGID COLUMN	URBIS	AXIA 2 S1	MALLATITE	TUBULAR STEEL	6	GALVANISED	TUBULAR
46100495	EASTFIELD ROAD	Brigg Parish	500657.75	407398.41	5	7004	00187117	27/08/2019 00:00	2	3	LESS THAN 30MPH	BACK OF FOOTPATH	0	POST TOP	NOT APPLICABLE	RIGID COLUMN	URBIS	AXIA 2 S1	MALLATITE	TUBULAR STEEL	6	GALVANISED	TUBULAR
46100495	EASTFIELD ROAD	Brigg Parish	500688.82	407416.68	6	7005	00187118	27/08/2019 00:00	2	3	LESS THAN 30MPH	BACK OF FOOTPATH	0	POST TOP	NOT APPLICABLE	RIGID COLUMN	URBIS	AXIA 2 S1	MALLATITE	TUBULAR STEEL	6	GALVANISED	TUBULAR
46100495	EASTFIELD ROAD	Brigg Parish	500727.76	407419.84	7	7006	00187119	27/08/2019 00:00	2	3	LESS THAN 30MPH	BACK OF FOOTPATH	0	POST TOP	NOT APPLICABLE	RIGID COLUMN	URBIS	AXIA 2 S1	MALLATITE	TUBULAR STEEL	6	GALVANISED	TUBULAR
46100496	EASTFIELD ROAD	Epworth Parish	478611.51	403688.41	1	7000	00187120	07/12/2018 00:00	5	3	LESS THAN 30MPH	BACK OF FOOTPATH	0	POST TOP	NOT APPLICABLE	RIGID COLUMN	URBIS	AXIA 2 S1	MALLATITE	TUBULAR STEEL	6	GALVANISED	TUBULAR
46100496	EASTFIELD ROAD	Epworth Parish	478895.46	403749.8	10	7009	00187129	01/04/1980 00:00	5	3	LESS THAN 30MPH	VERGE	0	POST TOP	NOT APPLICABLE	RIGID COLUMN	URBIS	AXIA 2 S1	PETITJEAN	SHEET STEEL	5	GALVANISED	NIDD
46100496	EASTFIELD ROAD	Epworth Parish	478934.74	403758.33	11	7010	00187130	01/04/1980 00:00	5	3	LESS THAN 30MPH	VERGE	0	POST TOP	NOT APPLICABLE	RIGID COLUMN	URBIS	AXIA 2 S1	PETITJEAN	SHEET STEEL	5	GALVANISED	NIDD
46100496	EASTFIELD ROAD	Epworth Parish	478646.11	403677.75	2	7001	00187121	07/12/2018 00:00	5	3	LESS THAN 30MPH	BACK OF FOOTPATH	0	POST TOP	NOT APPLICABLE	RIGID COLUMN	URBIS	AXIA 2 S1	MALLATITE	TUBULAR STEEL	6	GALVANISED	TUBULAR
46100496	EASTFIELD ROAD	Epworth Parish	478669.9	403673.51	3	7002	00187122	07/12/2018 00:00	5	3	LESS THAN 30MPH	BACK OF FOOTPATH	0	POST TOP	NOT APPLICABLE	RIGID COLUMN	URBIS	AXIA 2 S1	MALLATITE	TUBULAR STEEL	6	GALVANISED	TUBULAR
46100496	EASTFIELD ROAD	Epworth Parish	478705.44	403678.85	4	7003	00187123	01/04/2010 00:00	5	3	LESS THAN 30MPH	BACK OF FOOTPATH	0	POST TOP	NOT APPLICABLE	RIGID COLUMN	URBIS	AXIA 2 S1	MALLATITE	TUBULAR STEEL	6	GALVANISED	TUBULAR
46100496	EASTFIELD ROAD	Epworth Parish	478738.52	403687.08	5	7004	00187124	07/12/2018 00:00	5	3	LESS THAN 30MPH	BACK OF FOOTPATH	0	POST TOP	NOT APPLICABLE	RIGID COLUMN	URBIS	AXIA 2 S1	MALLATITE	TUBULAR STEEL	6	GALVANISED	TUBULAR
46100496	EASTFIELD ROAD	Epworth Parish	478766.32	403709.8	6	7005	00187125	07/12/2018 00:00	5	3	LESS THAN 30MPH	BACK OF FOOTPATH	0	POST TOP	NOT APPLICABLE	RIGID COLUMN	URBIS	AXIA 2 S1	MALLATITE	TUBULAR STEEL	6	GALVANISED	TUBULAR
46100496	EASTFIELD ROAD	Epworth Parish	478798.18	403724.12	7	7006	00187126	19/05/2023 00:00	5	3	LESS THAN 30MPH	BACK OF FOOTPATH	0	POST TOP	NOT APPLICABLE	RIGID COLUMN	URBIS	AXIA 2 S1	MALLATITE	TUBULAR STEEL	6	GALVANISED	TUBULAR
46100496	EASTFIELD ROAD	Epworth Parish	478827.37	403739.19	8	7007	00187127	01/04/1980 00:00	5	3	LESS THAN 30MPH	VERGE	0	POST TOP	NOT APPLICABLE	RIGID COLUMN	URBIS	AXIA 2 S1	PETITJEAN	SHEET STEEL	5	GALVANISED	NIDD
46100496	EASTFIELD ROAD	Epworth Parish	478862.08	403745.33	9	7008	00187128	01/04/1980 00:00	5	3	LESS THAN 30MPH	VERGE	0	POST TOP	NOT APPLICABLE	RIGID COLUMN	URBIS	AXIA 2 S1	PETITJEAN	SHEET STEEL	5	GALVANISED	NIDD
46100497	EASTFIELD ROAD	Scunthorpe	490391.65	408301.53	1	7000	00187132	03/03/2023 00:00	1	3	LESS THAN 30MPH	BACK OF FOOTPATH	0	POST TOP	NOT APPLICABLE	RIGID COLUMN	URBIS	AXIA 2 S1	MALLATITE	TUBULAR STEEL	6	GALVANISED	TUBULAR
46100497	EASTFIELD ROAD	Scunthorpe	490386.61	408262.22	2	7001	00187133	03/03/2023 00:00	1	3	LESS THAN 30MPH	BACK OF FOOTPATH	0	POST TOP	NOT APPLICABLE	RIGID COLUMN	URBIS	AXIA 2 S1	MALLATITE	TUBULAR STEEL	6	GALVANISED	TUBULAR
46100497	EASTFIELD ROAD	Scunthorpe	490398.05	408224.41	3	7002	00187134	03/03/2023 00:00	1	3	LESS THAN 30MPH	BACK OF FOOTPATH	0	POST TOP	NOT APPLICABLE	RIGID COLUMN	URBIS	AXIA 2 S1	MALLATITE	TUBULAR STEEL	6	GALVANISED	TUBULAR
46100497	EASTFIELD ROAD	Scunthorpe	490393.19	408189.55	4	7003	00187135	01/04/1970 00:00	1	3	LESS THAN 30MPH	FRONT OF FOOTPATH	500	SINGLE ARM	NOT APPLICABLE	RIGID COLUMN	URBIS	AXIA 2 S1	MALLATITE	TUBULAR STEEL	5	NOT APPLICABI	STEPPED TUBULAR
46100498	EASTHOLME GARDENS	Burton upon Stather Parish	487166.74	417540.01	1	7000	00187136	01/04/2008 00:00	2	3	LESS THAN 30MPH	BACK OF FOOTPATH	0	SINGLE ARM	NOT APPLICABLE	RIGID COLUMN	URBIS	AXIA 2 S1	MALLATITE	TUBULAR STEEL	6	GALVANISED	STEPPED TUBULAR
46100498	EASTHOLME GARDENS	Burton upon Stather Parish	487212.82	417546.68	2	7001	00187137	01/04/2009 00:00	2	3	LESS THAN 30MPH	BACK OF FOOTPATH	0	SINGLE ARM	NOT APPLICABLE	RIGID COLUMN	URBIS	AXIA 2 S1	MALLATITE	TUBULAR STEEL	6	GALVANISED	STEPPED TUBULAR
46100498	EASTHOLME GARDENS	Burton upon Stather Parish	487238.23	417543.6	3	7002	00187138	01/04/2009 00:00	2	3	LESS THAN 30MPH	BACK OF FOOTPATH	0	SINGLE ARM	NOT APPLICABLE	RIGID COLUMN	URBIS	AXIA 2 S1	MALLATITE	TUBULAR STEEL	6	GALVANISED	STEPPED TUBULAR
46100498	EASTHOLME GARDENS	Burton upon Stather Parish	487273.23	417540.24	4	7003	00187139	01/04/2008 00:00	2	3	LESS THAN 30MPH	BACK OF FOOTPATH	0	SINGLE ARM	NOT APPLICABLE	RIGID COLUMN	URBIS	AXIA 2 S1	MALLATITE	TUBULAR STEEL	6	GALVANISED	STEPPED TUBULAR
46100498	EASTHOLME GARDENS	Burton upon Stather Parish	487293.95	417540.94	5	7004	00187140	01/04/2008 00:00	2	3	LESS THAN 30MPH	BACK OF FOOTPATH	0	SINGLE ARM	NOT APPLICABLE	RIGID COLUMN	URBIS	AXIA 2 S1	MALLATITE	TUBULAR STEEL	6	GALVANISED	STEPPED TUBULAR
46100498	EASTHOLME GARDENS	Burton upon Stather Parish	487293.67	417572.3	6	7005	00187141	01/04/2008 00:00	2	3	LESS THAN 30MPH	BACK OF FOOTPATH	0	SINGLE ARM	NOT APPLICABLE	RIGID COLUMN	URBIS	AXIA 2 S1	MALLATITE	TUBULAR STEEL	6	GALVANISED	STEPPED TUBULAR
46100498	EASTHOLME GARDENS	Burton upon Stather Parish	487289.33	417584.34	7	7006	00187142	01/04/2008 00:00	2	3	LESS THAN 30MPH	BACK OF FOOTPATH	0	SINGLE ARM	NOT APPLICABLE	RIGID COLUMN	URBIS	AXIA 2 S1	MALLATITE	TUBULAR STEEL	6	GALVANISED	STEPPED TUBULAR
46100500	EASTWOOD DRIVE	Broughton Parish	496523.89	409345.23	1	7000	00187143	26/02/2019 00:00	1	1	LESS THAN 30MPH	BACK OF FOOTPATH	0	POST TOP	NOT APPLICABLE	RIGID COLUMN	URBIS	AXIA 2 S1	MALLATITE	TUBULAR STEEL	6	GALVANISED	TUBULAR
46100500	EASTWOOD DRIVE	Broughton Parish	496537.19	409316.34	2	7001	00187144	26/02/2019 00:00	1	1	LESS THAN 30MPH	BACK OF FOOTPATH	0	POST TOP	NOT APPLICABLE	RIGID COLUMN	URBIS	AXIA 2 S1	MALLATITE	TUBULAR STEEL	6	GALVANISED	TUBULAR
46100500	EASTWOOD DRIVE	Broughton Parish	496559.09	409286.91	3	7002	00187145	26/02/2019 00:00	1	1	LESS THAN 30MPH	BACK OF FOOTPATH	0	POST TOP	NOT APPLICABLE	RIGID COLUMN	URBIS	AXIA 2 S1	MALLATITE	TUBULAR STEEL	6	GALVANISED	TUBULAR
46100502	EDINBURGH ROAD	Keadby with Althorpe Parish	483486.37	411039.11	1	7000	00187146	01/04/1985 00:00	4	3	LESS THAN 30MPH	VERGE	300	SINGLE ARM	NOT APPLICABLE	RIGID COLUMN	URBIS	AXIA 2 S1	PETITJEAN	SHEET STEEL	5	GALVANISED	DAER
46100502	EDINBURGH ROAD	Keadby with Althorpe Parish	483487.18	410996.37	2	7001	00187147	01/04/1985 00:00	4	3	LESS THAN 30MPH	VERGE	300	SINGLE ARM	NOT APPLICABLE	RIGID COLUMN	URBIS	AXIA 2 S1	PETITJEAN	SHEET STEEL	5	GALVANISED	DAER
46100502	EDINBURGH ROAD	Keadby with Althorpe Parish	483485.48	410967.42	3	7002	00187148	01/04/1985 00:00	4	3	LESS THAN 30MPH	BACK OF FOOTPATH	300	SINGLE ARM	NOT APPLICABLE	RIGID COLUMN	URBIS	AXIA 2 S1	PETITJEAN	SHEET STEEL	5	GALVANISED	DAER
46100503	EDWARDS ROAD	Scunthorpe	488545.2	411571.28	10	7009	00187158	30/06/2020 00:00	6	3	LESS THAN 30MPH	VERGE	0	POST TOP	NOT APPLICABLE	RIGID COLUMN	URBIS	AXIA 2 S1	MALLATITE	TUBULAR STEEL	6	GALVANISED	TUBULAR
46100503	EDWARDS ROAD	Scunthorpe	488549.02	411544.69	11	7010	00187159	30/06/2020 00:00	6	3	LESS THAN 30MPH	VERGE	0	POST TOP	NOT APPLICABLE	RIGID COLUMN	URBIS	AXIA 2 S1	MALLATITE	TUBULAR STEEL	6	GALVANISED	TUBULAR
46100503	EDWARDS ROAD	Scunthorpe	488544.83	411514.73	12	7011	00187160	30/06/2020 00:00	6	3	LESS THAN 30MPH	VERGE	0	POST TOP	NOT APPLICABLE	RIGID COLUMN	URBIS	AXIA 2 S1	MALLATITE	TUBULAR STEEL	6	GALVANISED	TUBULAR
46100503	EDWARDS ROAD	Scunthorpe	488584.07	411598.72	1FP	7000	00187149	01/04/2001 00:00	6	3	LESS THAN 30MPH	BACK OF FOOTPATH	0	POST TOP	NOT APPLICABLE	RIGID COLUMN	URBIS	AXIA 2 S1	MALLATITE	TUBULAR STEEL	6	GALVANISED	STEPPED TUBULAR
46100503	EDWARDS ROAD	Scunthorpe	488581.1	411565.32	2FP	7001	00187150	01/04/1993 00:00	6	3	NOT ON A ROAD	BACK OF FOOTPATH	0	POST TOP	NOT APPLICABLE	MID HINGED	URBIS	AXIA 2 S1	PETITJEAN	SHEET STEEL	5	GALVANISED	LEVEN
46100503	EDWARDS ROAD	Scunthorpe	488598.13	411535.33	3	7002	00187151	01/04/1993 00:00	6	3	NOT ON A ROAD	BACK OF FOOTPATH	0	POST TOP	NOT APPLICABLE	MID HINGED	URBIS	AXIA 2 S1	PETITJEAN	SHEET STEEL	5	GALVANISED	LEVEN
46100503	EDWARDS ROAD	Scunthorpe	488594.2	411497.92	4	7003	00187152	01/04/1993 00:00	6	3	NOT ON A ROAD	BACK OF FOOTPATH	0	POST TOP	NOT APPLICABLE	MID HINGED	URBIS	AXIA 2 S1	PETITJEAN	SHEET STEEL	5	GALVANISED	LEVEN
46100503	EDWARDS ROAD	Scunthorpe	488596.46	411593.3	5	7004	00187153	01/04/1972 00:00	6	3	LESS THAN 30MPH	BACK OF FOOTPATH	0	POST TOP	MID GREY	RIGID COLUMN	URBIS	AXIA 2 S1	CU	TUBULAR STEEL	5	PAINTED	PRECOINCT
46100503	EDWARDS ROAD	Scunthorpe	488622.12	411585.79	6	7005	00187154	30/06/2020 00:00	6	3	LESS THAN 30MPH	VERGE	0	POST TOP	NOT APPLICABLE	RIGID COLUMN	URBIS	AXIA 2 S1	MALLATITE	TUBULAR STEEL	6	GALVANISED	TUBULAR
46100503	EDWARDS ROAD	Scunthorpe	488634.93	411555.58	7	7006	00187155	30/06/2020 00:00	6	3	LESS THAN 30MPH	VERGE	0	POST TOP	NOT APPLICABLE	RIGID COLUMN	URBIS	AXIA 2 S1	MALLATITE	TUBULAR STEEL	6	GALVANISED	TUBULAR
46100503	EDWARDS ROAD	Scunthorpe	488633.04	411526.94	8	7007	00187156	30/06/2020 00:00	6	3	LESS THAN 30MPH	VERGE	0	POST TOP	NOT APPLICABLE	RIGID COLUMN	URBIS	AXIA 2 S1	MALLATITE	TUBULAR STEEL	6	GALVANISED	TUBULAR
46100503	EDWARDS ROAD	Scunthorpe	488569.72	411580.84	9	7008	00187157	01/04/2010 00:00	6	3	LESS THAN 30MPH	BACK OF FOOTPATH	0	POST TOP	NOT APPLICABLE	RIGID COLUMN	URBIS	AXIA 2 S1	MALLATITE	TUBULAR STEEL	6	GALVANISED	TUBULAR
46100504	EGTON AVENUE	Messingham Parish	489779.38	404466.68	1	7000	00187161	01/04/2004 00:00	4	1	LESS THAN 30MPH	BACK OF FOOTPATH	0	POST TOP	NOT APPLICABLE	RIGID COLUMN	URBIS	AXIA 2 S1	MALLATITE	TUBULAR STEEL	5	GALVANISED	STEPPED TUBULAR
46100504	EGTON AVENUE	Messingham Parish	489814.14	404458.75	2	7001	00187162	01/04/2004 00:00	4	1	LESS THAN 30MPH	BACK OF FOOTPATH	0	POST TOP	NOT APPLICABLE	RIGID COLUMN	URBIS	AXIA 2 S1	MALLATITE	TUBULAR STEEL	5	GALVANISED	STEPPED TUBULAR
46100504	EGTON AVENUE	Messingham Parish	489832.95	404451.49	3	7002	00187163	01/04/2004 00:00	4	1	LESS THAN 30MPH	BACK OF FOOTPATH	0	POST TOP	NOT APPLICABLE	RIGID COLUMN	URBIS	AXIA 2 S1	MALLATITE	TUBULAR STEEL	5	GALVANISED	STEPPED TUBULAR
46100504	EGTON AVENUE	Messingham Parish	489839.67	404467.89	4	7003	00187164	01/04/2004 00:00	4	1	LESS THAN 30MPH	VERGE	0	POST TOP	NOT APPLICABLE	RIGID COLUMN	URBIS	AXIA 2 S1	MALLATITE	TUBULAR STEEL	5	GALVANISED	STEPPED TUBULAR
46100505	EIGHTH AVENUE	Flixborough Parish	486272.83	414857.81	1	7000	00187165	01/04/1977 00:00	2	1	LESS THAN 30MPH	VERGE	1000	SINGLE ARM	DARK GREY	RIGID COLUMN	URBIS	AXIA 2 S1	PETITJEAN	SHEET STEEL	8	PAINTED	THAMES
46100505	EIGHTH AVENUE	Flixborough Parish	486032.76	414751.77	10	7009	00187174	01/04/1977 00:00	2	1	LESS THAN 30MPH	VERGE	1000	SINGLE ARM	DARK GREY	RIGID COLUMN	URBIS	AXIA 2 S1	PETITJEAN	SHEET STEEL	8	PAINTED	THAMES
46100505	EIGHTH AVENUE	Flixborough Parish	486003.36	414739.81	11FP	7011	00187176	01/04/1977 00:00	2	1	LESS THAN 30MPH	VERGE	1000	SINGLE ARM	DARK GREY	RIGID COLUMN	URBIS	AXIA 2 S1	PETITJEAN	SHEET STEEL	8	PAINTED	THAMES
46100505	EIGHTH AVENUE	Flixborough Parish	485972.66	414727.82	12	7010	00187175	01/04/1977 00:00	2	1	LESS THAN 30MPH	VERGE	1000	SINGLE ARM	DARK GREY	RIGID COLUMN	URBIS	AXIA 2 S1	PETITJEAN	SHEET STEEL	8	PAINTED	THAMES
46100505	EIGHTH AVENUE	Flixborough Parish	486241.79	414846.65	2	7001	00187166	01/04/1977 00:00	2	1	LESS THAN 30MPH	VERGE	1000	SINGLE ARM	DARK GREY	RIGID COLUMN	URBIS	AXIA 2 S1	PETITJEAN	SHEET STEEL	8	PAINTED	THAMES
46100505	EIGHTH AVENUE	Flixborough Parish	486222.17	414838.58	3	7002	00187167	01/04/1977 00:00	2	1	LESS THAN 30MPH	VERGE	1000	SINGLE ARM	DARK GREY	RIGID COLUMN	URBIS	AXIA 2 S1	PETITJEAN	SHEET STEEL	8	PAINTED	THAMES
46100505	EIGHTH AVENUE	Flixborough Parish	486201.47	414829.98	4	7003	00187168	01/04/1977 00:00	2	1	LESS THAN 30MPH	VERGE	1000	SINGLE ARM	DARK GREY	RIGID COLUMN	URBIS	AXIA 2 S1	PETITJEAN	SHEET STEEL	8	PAINTED	THAMES
46100505	EIGHTH AVENUE	Flixborough Parish	486183.79	414821.96	5	7004	00187169	01/04/1977 00:00	2	1	LESS THAN 30MPH	VERGE	1000	SINGLE ARM	DARK GREY	RIGID COLUMN	URBIS	AXIA 2 S1	PETITJEAN	SHEET STEEL	8	PAINTED	THAMES
46100505	EIGHTH AVENUE	Flixborough Parish	486146.95	414789.23	6	7005	00187170	01/04/1977 00:00	2	1	LESS THAN 30MPH	VERGE	1000	SINGLE ARM	DARK GREY	RIGID COLUMN	URBIS	AXIA 2 S1	PETITJEAN	SHEET STEEL	8	PAINTED	THAMES
46100505	EIGHTH AVENUE	Flixborough Parish	486116.96	414788.19	7	7006	00187171	01/04/1977 00:00	2	1	LESS THAN 30MPH	VERGE	1000	SINGLE ARM	DARK GREY	RIGID COLUMN	URBIS	AXIA 2 S1	PETITJEAN	SHEET STEEL	8	PAINTED	THAMES
46100505	EIGHTH AVENUE	Flixborough Parish	486091.63	414776.8	8	7007	00187172	01/04/1977 00:00	2	1	LESS THAN 30MPH	VERGE	1000	SINGLE ARM	DARK GREY	RIGID COLUMN	URBIS	AXIA 2 S1	PETITJEAN	SHEET STEEL	8	PAINTED	THAMES
46100505	EIGHTH AVENUE	Flixborough Parish	486061.85	414765.55	9	7008	00187173	01/04/1977 00:00	2	1	LESS THAN 30MPH	VERGE	1000	SINGLE ARM	DARK GREY	RIGID COLUMN	URBIS	AXIA 2 S1	PETITJEAN	SHEET STEEL	8	PAINTED	THAMES
46100506

46100528	FAIRFIELD DRIVE	Barton upon Humber Parish	503974.95	421130.81	11	7008	00187348	01/04/1995 00:00	5	2	LESS THAN 30MPH	BACK OF FOOTPATH	0	POST TOP	NOT APPLICABLE	RIGID COLUMN	URBIS	AXIA 2 S1	PETITJEAN	SHEET STEEL	6	GALVANISED	NIDD
46100528	FAIRFIELD DRIVE	Barton upon Humber Parish	503871.83	421179.18	2	7003	00187343	01/04/2006 00:00	5	2	BETWEEN 30-50 MPH	BACK OF FOOTPATH	0	POST TOP	NOT APPLICABLE	RIGID COLUMN	URBIS	AXIA 2 S1	MALLATITE	TUBULAR STEEL	6	GALVANISED	STEPPED TUBULAR
46100528	FAIRFIELD DRIVE	Barton upon Humber Parish	503892.13	421189.68	3	7004	00187344	01/04/2006 00:00	5	2	BETWEEN 30-50 MPH	BACK OF FOOTPATH	0	POST TOP	NOT APPLICABLE	RIGID COLUMN	URBIS	AXIA 2 S1	MALLATITE	TUBULAR STEEL	6	GALVANISED	STEPPED TUBULAR
46100528	FAIRFIELD DRIVE	Barton upon Humber Parish	503914.53	421201.58	4	7005	00187345	01/04/2006 00:00	5	2	BETWEEN 30-50 MPH	BACK OF FOOTPATH	0	POST TOP	NOT APPLICABLE	RIGID COLUMN	URBIS	AXIA 2 S1	MALLATITE	TUBULAR STEEL	6	GALVANISED	STEPPED TUBULAR
46100528	FAIRFIELD DRIVE	Barton upon Humber Parish	503941.55	421199.06	5	7000	00187340	01/04/2006 00:00	5	2	BETWEEN 30-50 MPH	BACK OF FOOTPATH	0	POST TOP	NOT APPLICABLE	RIGID COLUMN	URBIS	AXIA 2 S1	MALLATITE	TUBULAR STEEL	6	GALVANISED	STEPPED TUBULAR
46100528	FAIRFIELD DRIVE	Barton upon Humber Parish	503960.45	421176.1	6	7001	00187341	01/04/2006 00:00	5	2	BETWEEN 30-50 MPH	BACK OF FOOTPATH	0	POST TOP	NOT APPLICABLE	RIGID COLUMN	URBIS	AXIA 2 S1	MALLATITE	TUBULAR STEEL	6	GALVANISED	STEPPED TUBULAR
46100528	FAIRFIELD DRIVE	Barton upon Humber Parish	503968.43	421154.12	7	7010	00187424	01/04/2006 00:00	5	2	BETWEEN 30-50 MPH	BACK OF FOOTPATH	0	POST TOP	NOT APPLICABLE	RIGID COLUMN	URBIS	AXIA 2 S1	MALLATITE	TUBULAR STEEL	6	GALVANISED	STEPPED TUBULAR
46100528	FAIRFIELD DRIVE	Barton upon Humber Parish	503984.95	421147.73	9	7006	00187346	01/04/1995 00:00	5	2	LESS THAN 30MPH	VERGE	0	POST TOP	NOT APPLICABLE	RIGID COLUMN	URBIS	AXIA 2 S1	PETITJEAN	SHEET STEEL	6	GALVANISED	NIDD
46100529	FAIRFIELD DRIVE	Messingham Parish	489468.02	404064.55	1	7000	00187350	01/04/1995 00:00	4	1	LESS THAN 30MPH	BACK OF FOOTPATH	0	POST TOP	LIGHT GREY	RIGID COLUMN	URBIS	AXIA 2 S1	PETITJEAN	SHEET STEEL	5	PAINTED	NIDD
46100529	FAIRFIELD DRIVE	Messingham Parish	489469.59	404091.03	2	7001	00187351	01/04/1995 00:00	4	1	LESS THAN 30MPH	VERGE	0	POST TOP	LIGHT GREY	RIGID COLUMN	URBIS	AXIA 2 S1	PETITJEAN	SHEET STEEL	5	PAINTED	NIDD
46100529	FAIRFIELD DRIVE	Messingham Parish	489469	404108.31	3	7002	00187352	01/04/1995 00:00	4	1	LESS THAN 30MPH	VERGE	0	POST TOP	LIGHT GREY	RIGID COLUMN	URBIS	AXIA 2 S1	PETITJEAN	SHEET STEEL	5	PAINTED	NIDD
46100529	FAIRFIELD DRIVE	Messingham Parish	489470.61	404127.66	4	7003	00187353	01/04/1995 00:00	4	1	LESS THAN 30MPH	VERGE	0	POST TOP	LIGHT GREY	RIGID COLUMN	URBIS	AXIA 2 S1	PETITJEAN	SHEET STEEL	5	PAINTED	NIDD
46100529	FAIRFIELD DRIVE	Messingham Parish	489430.29	404123.09	5	7004	00187354	01/04/2008 00:00	4	1	LESS THAN 30MPH	BACK OF FOOTPATH	0	NOT APPLICA	NOT APPLICABLE	RIGID COLUMN	URBIS	AXIA 2 S1	VALMONT ST	SHEET STEEL	5	GALVANISED	LEVEN
46100530	FAIRFIELD ROAD	Scunthorpe	487465.09	411800.53	1	7000	00187355	01/04/1970 00:00	2	3	LESS THAN 30MPH	BACK OF FOOTPATH	0	POST TOP	NOT APPLICABLE	RIGID COLUMN	URBIS	AXIA 2 S1	CU	TUBULAR STEEL	5	GALVANISED	STEPPED TUBULAR
46100530	FAIRFIELD ROAD	Scunthorpe	487613.6	412042.25	10	7009	00187364	27/01/2020 00:00	2	3	LESS THAN 30MPH	FRONT OF FOOTPATH	0	POST TOP	NOT APPLICABLE	RIGID COLUMN	URBIS	AXIA 2 S1	MALLATITE	TUBULAR STEEL	6	GALVANISED	TUBULAR
46100530	FAIRFIELD ROAD	Scunthorpe	487643.28	412040.19	11	7010	00187365	27/01/2020 00:00	2	3	LESS THAN 30MPH	FRONT OF FOOTPATH	0	POST TOP	NOT APPLICABLE	RIGID COLUMN	URBIS	AXIA 2 S1	MALLATITE	TUBULAR STEEL	6	GALVANISED	TUBULAR
46100530	FAIRFIELD ROAD	Scunthorpe	487677.83	412037.24	12	7011	00187366	01/04/1980 00:00	2	3	LESS THAN 30MPH	FRONT OF FOOTPATH	300	SINGLE ARM	NOT APPLICABLE	RIGID COLUMN	URBIS	AXIA 2 S1	PETITJEAN	SHEET STEEL	5	GALVANISED	DAER
46100530	FAIRFIELD ROAD	Scunthorpe	487708.49	412028.02	13	7012	00187367	27/01/2020 00:00	2	3	LESS THAN 30MPH	FRONT OF FOOTPATH	0	POST TOP	NOT APPLICABLE	RIGID COLUMN	URBIS	AXIA 2 S1	MALLATITE	TUBULAR STEEL	6	GALVANISED	TUBULAR
46100530	FAIRFIELD ROAD	Scunthorpe	487484.75	411832.91	2	7001	00187356	27/01/2020 00:00	2	3	LESS THAN 30MPH	FRONT OF FOOTPATH	0	POST TOP	NOT APPLICABLE	RIGID COLUMN	URBIS	AXIA 2 S1	MALLATITE	TUBULAR STEEL	6	GALVANISED	TUBULAR
46100530	FAIRFIELD ROAD	Scunthorpe	487490.62	411868.05	3	7002	00187357	27/01/2020 00:00	2	3	LESS THAN 30MPH	FRONT OF FOOTPATH	0	POST TOP	NOT APPLICABLE	RIGID COLUMN	URBIS	AXIA 2 S1	MALLATITE	TUBULAR STEEL	6	GALVANISED	TUBULAR
46100530	FAIRFIELD ROAD	Scunthorpe	487502.18	411905.01	4	7003	00187358	27/01/2020 00:00	2	3	LESS THAN 30MPH	BACK OF FOOTPATH	0	POST TOP	NOT APPLICABLE	RIGID COLUMN	URBIS	AXIA 2 S1	MALLATITE	TUBULAR STEEL	6	GALVANISED	TUBULAR
46100530	FAIRFIELD ROAD	Scunthorpe	487522.06	411935.24	5	7004	00187359	27/01/2020 00:00	2	3	LESS THAN 30MPH	FRONT OF FOOTPATH	0	POST TOP	NOT APPLICABLE	RIGID COLUMN	URBIS	AXIA 2 S1	MALLATITE	TUBULAR STEEL	6	GALVANISED	TUBULAR
46100530	FAIRFIELD ROAD	Scunthorpe	487527.08	411969.52	6	7005	00187360	27/01/2020 00:00	2	3	LESS THAN 30MPH	FRONT OF FOOTPATH	0	POST TOP	NOT APPLICABLE	RIGID COLUMN	URBIS	AXIA 2 S1	MALLATITE	TUBULAR STEEL	6	GALVANISED	TUBULAR
46100530	FAIRFIELD ROAD	Scunthorpe	487539.32	412000.61	7	7006	00187361	27/01/2020 00:00	2	3	LESS THAN 30MPH	FRONT OF FOOTPATH	0	POST TOP	NOT APPLICABLE	RIGID COLUMN	URBIS	AXIA 2 S1	MALLATITE	TUBULAR STEEL	6	GALVANISED	TUBULAR
46100530	FAIRFIELD ROAD	Scunthorpe	487560.17	412026.99	8	7007	00187362	01/04/1980 00:00	2	3	LESS THAN 30MPH	BACK OF FOOTPATH	0	POST TOP	NOT APPLICABLE	RIGID COLUMN	URBIS	AXIA 2 S1	PETITJEAN	SHEET STEEL	5	GALVANISED	DAER
46100530	FAIRFIELD ROAD	Scunthorpe	487588.83	412039.27	9	7008	00187363	01/04/2012 00:00	2	3	LESS THAN 30MPH	FRONT OF FOOTPATH	0	POST TOP	NOT APPLICABLE	RIGID COLUMN	URBIS	AXIA 2 S1	MALLATITE	TUBULAR STEEL	6	GALVANISED	TUBULAR
46100531	FAIRMONT CRESCENT	Scunthorpe	489828.28	410344.83	1	7000	00187368	01/04/2001 00:00	2	4	LESS THAN 30MPH	BACK OF FOOTPATH	300	SINGLE ARM	NOT APPLICABLE	RIGID COLUMN	URBIS	AXIA 2 S1	MALLATITE	TUBULAR STEEL	6	GALVANISED	STEPPED TUBULAR
46100531	FAIRMONT CRESCENT	Scunthorpe	489974.34	410466.15	10	7009	00187377	01/04/2001 00:00	2	4	LESS THAN 30MPH	BACK OF FOOTPATH	300	SINGLE ARM	NOT APPLICABLE	RIGID COLUMN	URBIS	AXIA 2 S1	MALLATITE	TUBULAR STEEL	6	GALVANISED	STEPPED TUBULAR
46100531	FAIRMONT CRESCENT	Scunthorpe	489982.34	410500	11	7010	00187378	01/04/2001 00:00	2	4	LESS THAN 30MPH	BACK OF FOOTPATH	300	SINGLE ARM	NOT APPLICABLE	RIGID COLUMN	URBIS	AXIA 2 S1	MALLATITE	TUBULAR STEEL	6	GALVANISED	STEPPED TUBULAR
46100531	FAIRMONT CRESCENT	Scunthorpe	489969.16	410532.25	12	7011	00187379	01/04/2001 00:00	2	4	LESS THAN 30MPH	BACK OF FOOTPATH	300	SINGLE ARM	NOT APPLICABLE	RIGID COLUMN	URBIS	AXIA 2 S1	MALLATITE	TUBULAR STEEL	6	GALVANISED	STEPPED TUBULAR
46100531	FAIRMONT CRESCENT	Scunthorpe	489976.61	410566.32	13	7012	00187380	01/04/2001 00:00	2	4	LESS THAN 30MPH	BACK OF FOOTPATH	300	SINGLE ARM	NOT APPLICABLE	RIGID COLUMN	URBIS	AXIA 2 S1	MALLATITE	TUBULAR STEEL	6	GALVANISED	STEPPED TUBULAR
46100531	FAIRMONT CRESCENT	Scunthorpe	489963.1	410592.62	14	7013	00187381	01/04/2001 00:00	2	4	LESS THAN 30MPH	BACK OF FOOTPATH	300	SINGLE ARM	NOT APPLICABLE	RIGID COLUMN	URBIS	AXIA 2 S1	MALLATITE	TUBULAR STEEL	6	GALVANISED	STEPPED TUBULAR
46100531	FAIRMONT CRESCENT	Scunthorpe	489971.99	410621.48	15	7014	00187382	01/04/2001 00:00	2	4	LESS THAN 30MPH	BACK OF FOOTPATH	300	SINGLE ARM	NOT APPLICABLE	RIGID COLUMN	URBIS	AXIA 2 S1	MALLATITE	TUBULAR STEEL	6	GALVANISED	STEPPED TUBULAR
46100531	FAIRMONT CRESCENT	Scunthorpe	489857.76	410337.26	2	7001	00187369	01/04/2001 00:00	2	4	LESS THAN 30MPH	BACK OF FOOTPATH	300	SINGLE ARM	NOT APPLICABLE	RIGID COLUMN	URBIS	AXIA 2 S1	MALLATITE	TUBULAR STEEL	6	GALVANISED	STEPPED TUBULAR
46100531	FAIRMONT CRESCENT	Scunthorpe	489891.84	410350.42	3	7002	00187370	01/04/2001 00:00	2	4	LESS THAN 30MPH	BACK OF FOOTPATH	300	SINGLE ARM	NOT APPLICABLE	RIGID COLUMN	URBIS	AXIA 2 S1	MALLATITE	TUBULAR STEEL	6	GALVANISED	STEPPED TUBULAR
46100531	FAIRMONT CRESCENT	Scunthorpe	489927.14	410342.89	4	7003	00187371	01/04/2001 00:00	2	4	LESS THAN 30MPH	BACK OF FOOTPATH	300	SINGLE ARM	NOT APPLICABLE	RIGID COLUMN	URBIS	AXIA 2 S1	MALLATITE	TUBULAR STEEL	6	GALVANISED	STEPPED TUBULAR
46100531	FAIRMONT CRESCENT	Scunthorpe	489952.8	410356.29	5	7004	00187372	01/04/2001 00:00	2	4	LESS THAN 30MPH	BACK OF FOOTPATH	300	SINGLE ARM	NOT APPLICABLE	RIGID COLUMN	URBIS	AXIA 2 S1	MALLATITE	TUBULAR STEEL	6	GALVANISED	STEPPED TUBULAR
46100531	FAIRMONT CRESCENT	Scunthorpe	489979.72	410348.03	6	7005	00187373	01/04/2001 00:00	2	4	LESS THAN 30MPH	BACK OF FOOTPATH	300	SINGLE ARM	NOT APPLICABLE	RIGID COLUMN	URBIS	AXIA 2 S1	MALLATITE	TUBULAR STEEL	6	GALVANISED	STEPPED TUBULAR
46100531	FAIRMONT CRESCENT	Scunthorpe	489993.23	410370.66	7	7006	00187374	01/04/2001 00:00	2	4	LESS THAN 30MPH	BACK OF FOOTPATH	300	SINGLE ARM	NOT APPLICABLE	RIGID COLUMN	URBIS	AXIA 2 S1	MALLATITE	TUBULAR STEEL	6	GALVANISED	STEPPED TUBULAR
46100531	FAIRMONT CRESCENT	Scunthorpe	489979.61	410403.15	8	7007	00187375	01/04/2001 00:00	2	4	LESS THAN 30MPH	BACK OF FOOTPATH	300	SINGLE ARM	NOT APPLICABLE	RIGID COLUMN	URBIS	AXIA 2 S1	MALLATITE	TUBULAR STEEL	6	GALVANISED	STEPPED TUBULAR
46100531	FAIRMONT CRESCENT	Scunthorpe	489987.49	410435.54	9	7008	00187376	01/04/2001 00:00	2	4	LESS THAN 30MPH	BACK OF FOOTPATH	300	SINGLE ARM	NOT APPLICABLE	RIGID COLUMN	URBIS	AXIA 2 S1	MALLATITE	TUBULAR STEEL	6	GALVANISED	STEPPED TUBULAR
46100532	FALKLAND WAY	Barton upon Humber Parish	504204.32	421768.62	1	7000	00187383	01/04/1988 00:00	5	2	BETWEEN 30-50 MPH	FRONT OF FOOTPATH	1250	SINGLE ARM	MID GREY	RIGID COLUMN	URBIS	AXIA 2 S1	PETITJEAN	SHEET STEEL	8	PAINTED	THAMES
46100532	FALKLAND WAY	Barton upon Humber Parish	504208.95	422056.52	10	7009	00187392	01/04/1988 00:00	5	2	BETWEEN 30-50 MPH	FRONT OF FOOTPATH	1250	SINGLE ARM	MID GREY	RIGID COLUMN	URBIS	AXIA 2 S1	PETITJEAN	SHEET STEEL	8	PAINTED	THAMES
46100532	FALKLAND WAY	Barton upon Humber Parish	504209.03	422090.38	11FP	7010	00187393	01/04/1988 00:00	5	2	BETWEEN 30-50 MPH	FRONT OF FOOTPATH	1250	SINGLE ARM	MID GREY	RIGID COLUMN	URBIS	AXIA 2 S1	PETITJEAN	SHEET STEEL	8	PAINTED	THAMES
46100532	FALKLAND WAY	Barton upon Humber Parish	504207.97	422121.2	12	7011	00187394	15/01/2019 00:00	5	2	BETWEEN 30-50 MPH	FRONT OF FOOTPATH	1250	SINGLE ARM	NOT APPLICABLE	RIGID COLUMN	URBIS	AXIA 2 S1	MALLATITE	TUBULAR STEEL	8	GALVANISED	TUBULAR
46100532	FALKLAND WAY	Barton upon Humber Parish	504203.02	422155.84	13	7012	00187395	01/04/1988 00:00	5	2	BETWEEN 30-50 MPH	FRONT OF FOOTPATH	1250	SINGLE ARM	MID GREY	RIGID COLUMN	URBIS	AXIA 2 S1	PETITJEAN	SHEET STEEL	8	PAINTED	THAMES
46100532	FALKLAND WAY	Barton upon Humber Parish	504192.55	422192.28	14FP	7013	00187396	01/04/1988 00:00	5	2	BETWEEN 30-50 MPH	FRONT OF FOOTPATH	1250	SINGLE ARM	MID GREY	RIGID COLUMN	URBIS	AXIA 2 S1	PETITJEAN	SHEET STEEL	8	PAINTED	THAMES
46100532	FALKLAND WAY	Barton upon Humber Parish	504181.38	422223.6	15	7014	00187397	01/04/1988 00:00	5	2	BETWEEN 30-50 MPH	FRONT OF FOOTPATH	1250	SINGLE ARM	MID GREY	RIGID COLUMN	URBIS	AXIA 2 S1	PETITJEAN	SHEET STEEL	8	PAINTED	THAMES
46100532	FALKLAND WAY	Barton upon Humber Parish	504170.7	422248.86	16FP	7015	00187398	01/04/1988 00:00	5	2	BETWEEN 30-50 MPH	FRONT OF FOOTPATH	1250	SINGLE ARM	MID GREY	RIGID COLUMN	URBIS	AXIA 2 S1	PETITJEAN	SHEET STEEL	8	PAINTED	THAMES
46100532	FALKLAND WAY	Barton upon Humber Parish	504157.17	422277.69	17	7016	00187399	01/04/1988 00:00	5	2	BETWEEN 30-50 MPH	FRONT OF FOOTPATH	1250	SINGLE ARM	MID GREY	RIGID COLUMN	URBIS	AXIA 2 S1	PETITJEAN	SHEET STEEL	8	PAINTED	THAMES
46100532	FALKLAND WAY	Barton upon Humber Parish	504141.38	422306.37	18	7017	00187400	01/04/1988 00:00	5	2	BETWEEN 30-50 MPH	FRONT OF FOOTPATH	1250	SINGLE ARM	MID GREY	RIGID COLUMN	URBIS	AXIA 2 S1	PETITJEAN	SHEET STEEL	8	PAINTED	THAMES
46100532	FALKLAND WAY	Barton upon Humber Parish	504123.66	422338.91	19FP	7018	00187401	15/01/2019 00:00	5	2	BETWEEN 30-50 MPH	FRONT OF FOOTPATH	1250	SINGLE ARM	NOT APPLICABLE	RIGID COLUMN	URBIS	AXIA 2 S1	MALLATITE	TUBULAR STEEL	8	GALVANISED	TUBULAR
46100532	FALKLAND WAY	Barton upon Humber Parish	504201.87	421800.27	2	7001	00187384	01/04/1988 00:00	5	2	BETWEEN 30-50 MPH	FRONT OF FOOTPATH	1250	SINGLE ARM	MID GREY	RIGID COLUMN	URBIS	AXIA 2 S1	PETITJEAN	SHEET STEEL	8	PAINTED	THAMES
46100532	FALKLAND WAY	Barton upon Humber Parish	504107.98	422366.94	20	7019	00187402	01/04/1988 00:00	5	2	BETWEEN 30-50 MPH	FRONT OF FOOTPATH	1250	SINGLE ARM	MID GREY	RIGID COLUMN	URBIS	AXIA 2 S1	PETITJEAN	SHEET STEEL	8	PAINTED	THAMES
46100532	FALKLAND WAY	Barton upon Humber Parish	504090.69	422397.49	21	7020	00187403	01/04/1988 00:00	5	2	BETWEEN 30-50 MPH	FRONT OF FOOTPATH	1250	SINGLE ARM	MID GREY	RIGID COLUMN	URBIS	AXIA 2 S1	PETITJEAN	SHEET STEEL	8	PAINTED	THAMES
46100532	FALKLAND WAY	Barton upon Humber Parish	504084.1	422428.94	22	7021	00187404	01/04/1988 00:00	5	2	BETWEEN 30-50 MPH	VERGE	1250	SINGLE ARM	MID GREY	RIGID COLUMN	URBIS	AXIA 2 S1	PETITJEAN	SHEET STEEL	8	PAINTED	THAMES
46100532	FALKLAND WAY	Barton upon Humber Parish	504066.6	422456.17	23	7022	00187405	01/04/1988 00:00	5	2	BETWEEN 30-50 MPH	FRONT OF FOOTPATH	1250	SINGLE ARM	MID GREY	RIGID COLUMN	URBIS	AXIA 2 S1	PETITJEAN	SHEET STEEL	8	PAINTED	THAMES
46100532	FALKLAND WAY	Barton upon Humber Parish	504037.4	422475.98	24	7023	00187406	01/04/1988 00:00	5	2	BETWEEN 30-50 MPH	FRONT OF FOOTPATH	1250	SINGLE ARM	MID GREY	RIGID COLUMN	URBIS	AXIA 2 S1	PETITJEAN	SHEET STEEL	8	PAINTED	THAMES
46100532	FALKLAND WAY	Barton upon Humber Parish	504024.91	422505.99	25	7024	00187407	01/04/1988 00:00	5	2	BETWEEN 30-50 MPH	FRONT OF FOOTPATH	1250	SINGLE ARM	MID GREY	RIGID COLUMN	URBIS	AXIA 2 S1	PETITJEAN	SHEET STEEL	8	PAINTED	THAMES
46100532	FALKLAND WAY	Barton upon Humber Parish	504002.64	422529.3	26	7025	00187408	01/04/1988 00:00	5	2	BETWEEN 30-50 MPH	FRONT OF FOOTPATH	1250	SINGLE ARM	MID GREY	RIGID COLUMN	URBIS	AXIA 2 S1	PETITJEAN	SHEET STEEL	8	PAINTED	THAMES
46100532	FALKLAND WAY	Barton upon Humber Parish	503979.26	422548.96	27	7026	00187409	01/04/1988 00:00	5	2	BETWEEN 30-50 MPH	FRONT OF FOOTPATH	1250	SINGLE ARM	MID GREY	RIGID COLUMN	URBIS	AXIA 2 S1	PETITJEAN	SHEET STEEL	8	PAINTED	THAMES
46100532	FALKLAND WAY	Barton upon Humber Parish	503953.75	422569.52	28	7027	00187410	01/04/1988 00:00	5	2	BETWEEN 30-50 MPH	FRONT OF FOOTPATH	1250	SINGLE ARM	MID GREY	RIGID COLUMN	URBIS	AXIA 2 S1	PETITJEAN	SHEET STEEL	8	PAINTED	THAMES
46100532	FALKLAND WAY	Barton upon Humber Parish	503929.83	422587.21	29	7028	00187411	01/04/1988 00:00	5	2	BETWEEN 30-50 MPH	FRONT OF FOOTPATH	1250	SINGLE ARM	MID GREY	RIGID COLUMN	URBIS	AXIA 2 S1	PETITJEAN	SHEET STEEL	8	PAINTED	THAMES
46100532	FALKLAND WAY	Barton upon Humber Parish	504198.45	421832.9	3	7002	00187385	01/04/1988 00:00	5	2	BETWEEN 30-50 MPH	FRONT OF FOOTPATH	1250	SINGLE ARM	MID GREY	RIGID COLUMN	URBIS	AXIA 2 S1	PETITJEAN	SHEET STEEL	8	PAINTED	THAMES
46100532	FALKLAND WAY	Barton upon Humber Parish	503903.82	422604.32	30	7029	00187412	01/04/1988 00:00	5	2	BETWEEN 30-50 MPH	FRONT OF FOOTPATH	1250	SINGLE ARM	MID GREY	RIGID COLUMN	URBIS	AXIA 2 S1	PETITJEAN	SHEET STEEL	8	PAINTED	THAMES
46100532	FALKLAND WAY	Barton upon Humber Parish	503875.85	422608.49	31	7030	00187413	01/04/1988 00:00	5	2	BETWEEN 30-50 MPH	FRONT OF FOOTPATH	1250	SINGLE ARM	MID GREY	RIGID COLUMN	URBIS	AXIA 2 S1	PETITJEAN	SHEET STEEL	8	PAINTED	THAMES
46100532	FALKLAND WAY	Barton upon Humber Parish	503848.18	422634.18	32	7031	00187414	01/04/1988 00:00	5	2	BETWEEN 30-50 MPH	FRONT OF FOOTPATH	1250	SINGLE ARM	MID GREY	RIGID COLUMN	URBIS	AXIA 2 S1	PETITJEAN	SHEET STEEL	8	PAINTED	THAMES
46100532	FALKLAND WAY	Barton upon Humber Parish	503816.78	422646.91	33	7032	00187415	01/04/1988 00:00	5	2	BETWEEN 30-50 MPH	FRONT OF FOOTPATH	1250	SINGLE ARM	MID GREY	RIGID COLUMN	URBIS	AXIA 2 S1	PETITJEAN	SHEET STEEL	8	PAINTED	THAMES
46100532	FALKLAND WAY	Barton upon Humber Parish	503790.13	422656.36	34	7033	00187416	01/04/1988 00:00	5	2	BETWEEN 30-50 MPH	FRONT OF FOOTPATH	1250	SINGLE ARM	MID GREY	RIGID COLUMN	URBIS	AXIA 2 S1	PETITJEAN	SHEET STEEL	8	PAINTED	THAMES
46100532	FALKLAND WAY	Barton upon Humber Parish	503758.82	422666.66	35	7034	00187417	01/04/1988 00:00	5	2	BETWEEN 30-50 MPH	FRONT OF FOOTPATH	1250	SINGLE ARM	MID GREY	RIGID COLUMN	URBIS	AXIA 2 S1	PETITJEAN	SHEET STEEL	8	PAINTED	THAMES
46100532	FALKLAND WAY	Barton upon Humber Parish	503725.28	422673.85	36	7035	00187418	01/04/1988 00:00	5	2	BETWEEN 30-50 MPH	FRONT OF FOOTPATH	1250	SINGLE ARM	MID GREY	RIGID COLUMN	URBIS	AXIA 2 S1	PETITJEAN	SHEET STEEL	8	PAINTED	THAMES
46100532	FALKLAND WAY	Barton upon Humber Parish	503695.46	422678.7	37	7036	00187419	01/04/1988 00:00	5	2	BETWEEN 30-50 MPH	FRONT OF FOOTPATH	1250	SINGLE ARM	MID GREY	RIGID COLUMN	URBIS	AXIA 2 S1	PETITJEAN	SHEET STEEL	8	PAINTED	THAMES
46100532	FALKLAND WAY	Barton upon Humber Parish	503661.79	422681.76	38	7037	00187420	01/04/1988 00:00	5	2	BETWEEN 30-50 MPH	FRONT OF FOOTPATH	1250	SINGLE ARM	MID GREY	RIGID COLUMN	URBIS	AXIA 2 S1	PETITJEAN	SHEET STEEL	8	PAINTED	THAMES
46100532	FALKLAND WAY	Barton upon Humber Parish	503631.33	422670.56	39	7038	00187421	01/04/1988 00:00	5	2	BETWEEN 30-50 MPH	FRONT OF FOOTPATH	1250	SINGLE ARM	MID GREY	RIGID COLUMN	URBIS	AXIA 2 S1	PETITJEAN	SHEET STEEL	8	PAINTED	THAMES
46100532	FALKLAND WAY	Barton upon Humber Parish	504196.67	421864.65	4	7003	00187386	01/04/1988 00:00	5	2	BETWEEN 30-50 MPH	FRONT OF FOOTPATH	1250	SINGLE ARM	MID GREY	RIGID COLUMN	URBIS	AXIA 2 S1	PETITJEAN	SHEET STEEL	8	PAINTED	THAMES
46100532	FALKLAND WAY	Barton upon Humber Parish	503600.64	422669.55	40	7039	00187422	01/04/1988 00:00	5	2	BETWEEN 30-50 MPH	FRONT OF FOOTPATH	1250	SINGLE ARM	MID GREY	RIGID COLUMN	URBIS	AXIA 2 S1	PETITJEAN	SHEET STEEL	8	PAINTED	THAMES
46100532	FALKLAND WAY	Barton upon Humber Parish	503582.71	422682.29	41	7040	00187423	01/04/1988 00:00	5	2	BETWEEN 30-50 MPH	FRONT OF FOOTPATH	1250	SINGLE ARM	MID GREY	RIGID COLUMN	URBIS	AXIA 2 S1	PETITJEAN	SHEET STEEL	8	PAINTED	THAMES
46100532	FALKLAND WAY	Barton upon Humber Parish	504196.49	421897.96	5	7004	00187387	01/04/1988 00:00	5	2	BETWEEN 30-50 MPH	FRONT OF FOOTPATH	1250	SINGLE ARM	MID GREY	RIGID COLUMN	URBIS	AXIA 2 S1	PETITJEAN	SHEET STEEL	8	PAINTED	THAMES
46100532	FALKLAND WAY	Barton upon Humber Parish	504198.54	421930.89	6	7005	00187388	01/04/1988 00:00	5	2	BETWEEN 30-50 MPH	FRONT OF FOOTPATH	1250	SINGLE ARM	MID GREY	RIGID COLUMN	URBIS	AXIA 2 S1	PETITJEAN	SHEET STEEL	8	PAINTED	THAMES
46100532	FALKLAND WAY	Barton upon Humber Parish	504201.33	421962.27	7	7006	00187389	01/04/1988 00:00	5	2	BETWEEN 30-50 MPH	FRONT OF FOOTPATH	1250	SINGLE ARM	MID GREY	RIGID COLUMN	URBIS	AXIA 2 S1	PETITJEAN	SHEET STEEL	8	PAINTED	THAMES
46100532	FALKLAND WAY	Barton upon Humber Parish	504204.4	421993.24	8	7007	00187390	28/11/2018 00:00	5	2	BETWEEN 30-50 MPH	FRONT OF FOOTPATH	1250	SINGLE ARM	NOT APPLICABLE	RIGID COLUMN	URBIS	AXIA 2 S1	MALLATITE	TUBULAR STEEL	8	GALVANISED	TUBULAR
46100532	FALKLAND WAY	Barton upon Humber Parish	504207.06	422026.75	9	7008	00187391	01/04/1988 00:00	5	2	BETWEEN 30-50 MPH	FRONT OF FOOTPATH	1250	SINGLE ARM	MID GREY	RIGID COLUMN	URBIS	AXIA 2 S1	PETITJEAN	SHEET STEEL	8	PAINTED	THAMES
46100534	FAR INGS ROAD	Barton upon Humber Parish	502845.39	422934.75	1	7001	00187425	01/04/2006 00:00	5	2	BETWEEN 30-50 MPH	BACK OF FOOTPATH	300	SINGLE ARM	NOT APPLICABLE	RIGID COLUMN	URBIS	AXIA 2 S1	MALLATITE	TUBULAR STEEL	6	GALVANISED	TUBULAR
46100534	FAR INGS ROAD	Barton upon Humber Parish	502814.5	422935.1	2	7002	00187426	01/04/2006 00:00	5	2	BETWEEN 30-50 MPH	BACK OF FOOTPATH	300	SINGLE ARM	NOT APPLICABLE	RIGID COLUMN	URBIS	AXIA 2 S1	MALLATITE	TUBULAR STEEL	6	GALVANISED	TUBULAR
46100534

46100554	FIELDSIDE	Epworth Parish	477894	403873.6	6	7011	00187597	01/04/2009 00:00	5	3	LESS THAN 30MPH	BACK OF FOOTPATH	0	POST TOP	NOT APPLICABLE	RIGID COLUMN	URBIS	AXIA 2 S1	MALLATITE	TUBULAR STEEL	6	GALVANISED	STEPPED TUBULAR
46100554	FIELDSIDE	Epworth Parish	477869.9	403875.9	7	7022	00187608	01/04/2011 00:00	5	3	LESS THAN 30MPH	VERGE	0	POST TOP	NOT APPLICABLE	RIGID COLUMN	URBIS	AXIA 2 S1	MALLATITE	TUBULAR STEEL	6	GALVANISED	STEPPED TUBULAR
46100554	FIELDSIDE	Epworth Parish	477846.8	403899	8	7012	00187598	01/04/2009 00:00	5	3	LESS THAN 30MPH	BACK OF FOOTPATH	0	POST TOP	NOT APPLICABLE	RIGID COLUMN	URBIS	AXIA 2 S1	MALLATITE	TUBULAR STEEL	6	GALVANISED	STEPPED TUBULAR
46100554	FIELDSIDE	Epworth Parish	477815.4	403903.6	9	7013	00187599	01/04/2009 00:00	5	3	LESS THAN 30MPH	VERGE	0	POST TOP	NOT APPLICABLE	RIGID COLUMN	URBIS	AXIA 2 S1	MALLATITE	TUBULAR STEEL	6	GALVANISED	STEPPED TUBULAR
46100556	FIFTH AVENUE	Flixborough Parish	486381.91	414624.8	1	7000	00187609	01/04/1978 00:00	2	1	LESS THAN 30MPH	VERGE	1000	SINGLE ARM	DARK GREY	RIGID COLUMN	URBIS	AXIA 2 S1	PETITJEAN	SHEET STEEL	8	PAINTED	THAMES
46100556	FIFTH AVENUE	Flixborough Parish	486394.91	414594.52	2	7001	00187610	01/04/1978 00:00	2	1	LESS THAN 30MPH	VERGE	1000	SINGLE ARM	DARK GREY	RIGID COLUMN	URBIS	AXIA 2 S1	PETITJEAN	SHEET STEEL	8	PAINTED	THAMES
46100556	FIFTH AVENUE	Flixborough Parish	486401.22	414579.19	3	7002	00187611	01/04/1978 00:00	2	1	LESS THAN 30MPH	VERGE	1000	SINGLE ARM	DARK GREY	RIGID COLUMN	URBIS	AXIA 2 S1	PETITJEAN	SHEET STEEL	8	PAINTED	THAMES
46100556	FIFTH AVENUE	Flixborough Parish	486414.81	414546.46	4	7003	00187612	01/04/1978 00:00	2	1	LESS THAN 30MPH	VERGE	1000	SINGLE ARM	DARK GREY	RIGID COLUMN	URBIS	AXIA 2 S1	PETITJEAN	SHEET STEEL	8	PAINTED	THAMES
46100556	FIFTH AVENUE	Flixborough Parish	486429.23	414539.73	5	7004	00187613	01/04/1978 00:00	2	1	LESS THAN 30MPH	VERGE	1000	SINGLE ARM	DARK GREY	RIGID COLUMN	URBIS	AXIA 2 S1	PETITJEAN	SHEET STEEL	8	PAINTED	THAMES
46100556	FIFTH AVENUE	Flixborough Parish	486451.97	414549.93	6FP	7007	00187616	01/04/1978 00:00	2	1	LESS THAN 30MPH	VERGE	1000	SINGLE ARM	DARK GREY	RIGID COLUMN	URBIS	AXIA 2 S1	PETITJEAN	SHEET STEEL	8	PAINTED	THAMES
46100556	FIFTH AVENUE	Flixborough Parish	486428.64	414513.43	7	7005	00187614	01/04/1978 00:00	2	1	LESS THAN 30MPH	VERGE	1000	SINGLE ARM	DARK GREY	RIGID COLUMN	URBIS	AXIA 2 S1	PETITJEAN	SHEET STEEL	8	PAINTED	THAMES
46100556	FIFTH AVENUE	Flixborough Parish	486438.56	414488.63	8	7006	00187615	01/04/1978 00:00	2	1	LESS THAN 30MPH	VERGE	1000	SINGLE ARM	DARK GREY	RIGID COLUMN	URBIS	AXIA 2 S1	PETITJEAN	SHEET STEEL	8	PAINTED	THAMES
46100557	FILLINGHAM CRESCENT	Gunness Parish	486803.61	411153.5	1	7000	00187617	01/04/1980 00:00	2	2	LESS THAN 30MPH	VERGE	0	POST TOP	LIGHT GREY	RIGID COLUMN	URBIS	AXIA 2 S1	PETITJEAN	SHEET STEEL	5	PAINTED	NIDD
46100557	FILLINGHAM CRESCENT	Gunness Parish	486780.39	411141.38	2	7001	00187618	01/04/1980 00:00	2	2	LESS THAN 30MPH	VERGE	0	POST TOP	LIGHT GREY	RIGID COLUMN	URBIS	AXIA 2 S1	PETITJEAN	SHEET STEEL	5	PAINTED	NIDD
46100557	FILLINGHAM CRESCENT	Gunness Parish	486753.44	411138.21	3	7002	00187619	01/04/1980 00:00	2	2	LESS THAN 30MPH	VERGE	0	POST TOP	LIGHT GREY	RIGID COLUMN	URBIS	AXIA 2 S1	PETITJEAN	SHEET STEEL	5	PAINTED	NIDD
46100558	FINKLE LANE	Barton upon Humber Parish	503045.03	422253.98	1	7000	00187620	07/06/2019 00:00	5	2	LESS THAN 30MPH	BACK OF FOOTPATH	0	POST TOP	NOT APPLICABLE	RIGID COLUMN	URBIS	AXIA 2 S1	MALLATITE	TUBULAR STEEL	6	GALVANISED	TUBULAR
46100558	FINKLE LANE	Barton upon Humber Parish	503042.13	422230.13	2	7001	00187621	07/06/2019 00:00	5	2	LESS THAN 30MPH	BACK OF FOOTPATH	0	POST TOP	NOT APPLICABLE	RIGID COLUMN	URBIS	AXIA 2 S1	MALLATITE	TUBULAR STEEL	6	GALVANISED	TUBULAR
46100558	FINKLE LANE	Barton upon Humber Parish	503035.08	422188.44	3	7002	00187622	07/06/2019 00:00	5	2	LESS THAN 30MPH	BACK OF FOOTPATH	0	POST TOP	NOT APPLICABLE	RIGID COLUMN	URBIS	AXIA 2 S1	MALLATITE	TUBULAR STEEL	6	GALVANISED	TUBULAR
46100558	FINKLE LANE	Barton upon Humber Parish	503030.39	422166.89	4	7003	00187623	07/06/2019 00:00	5	2	LESS THAN 30MPH	BACK OF FOOTPATH	0	POST TOP	NOT APPLICABLE	RIGID COLUMN	URBIS	AXIA 2 S1	MALLATITE	TUBULAR STEEL	6	GALVANISED	TUBULAR
46100558	FINKLE LANE	Barton upon Humber Parish	503021.51	422116.2	5	7004	00187624	07/06/2019 00:00	5	2	LESS THAN 30MPH	BACK OF FOOTPATH	0	POST TOP	NOT APPLICABLE	RIGID COLUMN	URBIS	AXIA 2 S1	MALLATITE	TUBULAR STEEL	6	GALVANISED	TUBULAR
46100559	FIR CLOSE	Bottesford Parish	489265.48	407827.02	1	7000	00187625	01/07/2019 00:00	3	1	LESS THAN 30MPH	BACK OF FOOTPATH	0	POST TOP	NOT APPLICABLE	RIGID COLUMN	URBIS	AXIA 2 S1	MALLATITE	TUBULAR STEEL	6	GALVANISED	TUBULAR
46100559	FIR CLOSE	Bottesford Parish	489232.69	407818.14	2	7001	00187626	01/07/2019 00:00	3	1	LESS THAN 30MPH	VERGE	0	POST TOP	NOT APPLICABLE	RIGID COLUMN	URBIS	AXIA 2 S1	MALLATITE	TUBULAR STEEL	6	GALVANISED	TUBULAR
46100559	FIR CLOSE	Bottesford Parish	489217.61	407840.73	3	7002	00187627	01/07/2019 00:00	3	1	LESS THAN 30MPH	VERGE	0	POST TOP	NOT APPLICABLE	RIGID COLUMN	URBIS	AXIA 2 S1	MALLATITE	TUBULAR STEEL	6	GALVANISED	TUBULAR
46100560	FIRST AVENUE	Flixborough Parish	486502.74	414698.31	1	7000	00187628	01/04/1978 00:00	2	1	LESS THAN 30MPH	VERGE	1000	SINGLE ARM	DARK GREY	RIGID COLUMN	URBIS	AXIA 2 S1	PETITJEAN	SHEET STEEL	8	PAINTED	THAMES
46100560	FIRST AVENUE	Flixborough Parish	486272.53	414616.4	10	7008	00187636	01/04/1978 00:00	2	1	LESS THAN 30MPH	VERGE	1000	SINGLE ARM	DARK GREY	RIGID COLUMN	URBIS	AXIA 2 S1	PETITJEAN	SHEET STEEL	8	PAINTED	THAMES
46100560	FIRST AVENUE	Flixborough Parish	486247.67	414606.88	11	7009	00187637	01/04/1978 00:00	2	1	LESS THAN 30MPH	VERGE	1000	SINGLE ARM	DARK GREY	RIGID COLUMN	URBIS	AXIA 2 S1	PETITJEAN	SHEET STEEL	8	PAINTED	THAMES
46100560	FIRST AVENUE	Flixborough Parish	486219.99	414597.16	12	7010	00187638	01/04/1978 00:00	2	1	LESS THAN 30MPH	VERGE	1000	SINGLE ARM	DARK GREY	RIGID COLUMN	URBIS	AXIA 2 S1	PETITJEAN	SHEET STEEL	8	PAINTED	THAMES
46100560	FIRST AVENUE	Flixborough Parish	486177.69	414582.86	13	7011	00187639	01/04/1978 00:00	2	1	LESS THAN 30MPH	VERGE	1000	SINGLE ARM	DARK GREY	RIGID COLUMN	URBIS	AXIA 2 S1	PETITJEAN	SHEET STEEL	8	PAINTED	THAMES
46100560	FIRST AVENUE	Flixborough Parish	486147.54	414573.34	14	7012	00187640	01/04/1978 00:00	2	1	LESS THAN 30MPH	VERGE	1000	SINGLE ARM	DARK GREY	RIGID COLUMN	URBIS	AXIA 2 S1	PETITJEAN	SHEET STEEL	8	PAINTED	THAMES
46100560	FIRST AVENUE	Flixborough Parish	486106.53	414559.41	15FP	7016	00187644	01/04/1978 00:00	2	1	LESS THAN 30MPH	VERGE	1000	SINGLE ARM	DARK GREY	RIGID COLUMN	URBIS	AXIA 2 S1	PETITJEAN	SHEET STEEL	8	PAINTED	THAMES
46100560	FIRST AVENUE	Flixborough Parish	486083.79	414553.06	16	7013	00187641	01/04/1978 00:00	2	1	LESS THAN 30MPH	VERGE	1000	SINGLE ARM	DARK GREY	RIGID COLUMN	URBIS	AXIA 2 S1	PETITJEAN	SHEET STEEL	8	PAINTED	THAMES
46100560	FIRST AVENUE	Flixborough Parish	486050.89	414542.66	17	7014	00187642	01/04/1978 00:00	2	1	LESS THAN 30MPH	VERGE	1000	SINGLE ARM	DARK GREY	RIGID COLUMN	URBIS	AXIA 2 S1	PETITJEAN	SHEET STEEL	8	PAINTED	THAMES
46100560	FIRST AVENUE	Flixborough Parish	486033.96	414540.01	18	7015	00187643	01/04/1978 00:00	2	1	LESS THAN 30MPH	VERGE	1000	SINGLE ARM	DARK GREY	RIGID COLUMN	URBIS	AXIA 2 S1	PETITJEAN	SHEET STEEL	8	PAINTED	THAMES
46100560	FIRST AVENUE	Flixborough Parish	486466.24	414685.08	2	7001	00187629	01/04/1978 00:00	2	1	LESS THAN 30MPH	VERGE	1000	SINGLE ARM	DARK GREY	RIGID COLUMN	URBIS	AXIA 2 S1	PETITJEAN	SHEET STEEL	8	PAINTED	THAMES
46100560	FIRST AVENUE	Flixborough Parish	486431.73	414672.58	3	7002	00187630	01/04/1978 00:00	2	1	LESS THAN 30MPH	VERGE	1000	SINGLE ARM	DARK GREY	RIGID COLUMN	URBIS	AXIA 2 S1	PETITJEAN	SHEET STEEL	8	PAINTED	THAMES
46100560	FIRST AVENUE	Flixborough Parish	486414.81	414667.29	4	7003	00187631	01/04/1978 00:00	2	1	LESS THAN 30MPH	VERGE	1000	SINGLE ARM	DARK GREY	RIGID COLUMN	URBIS	AXIA 2 S1	PETITJEAN	SHEET STEEL	8	PAINTED	THAMES
46100560	FIRST AVENUE	Flixborough Parish	486386.27	414658.25	5FP	7017	00187645	01/04/1978 00:00	2	1	LESS THAN 30MPH	VERGE	1000	SINGLE ARM	DARK GREY	RIGID COLUMN	URBIS	AXIA 2 S1	PETITJEAN	SHEET STEEL	8	PAINTED	THAMES
46100560	FIRST AVENUE	Flixborough Parish	486383.23	414640.02	6	7004	00187632	01/04/1978 00:00	2	1	LESS THAN 30MPH	VERGE	1000	SINGLE ARM	DARK GREY	RIGID COLUMN	URBIS	AXIA 2 S1	PETITJEAN	SHEET STEEL	8	PAINTED	THAMES
46100560	FIRST AVENUE	Flixborough Parish	486359.95	414647.95	7	7005	00187633	01/04/1978 00:00	2	1	LESS THAN 30MPH	VERGE	1000	SINGLE ARM	DARK GREY	RIGID COLUMN	URBIS	AXIA 2 S1	PETITJEAN	SHEET STEEL	8	PAINTED	THAMES
46100560	FIRST AVENUE	Flixborough Parish	486328.43	414636.65	8	7006	00187634	01/04/1978 00:00	2	1	LESS THAN 30MPH	VERGE	1000	SINGLE ARM	DARK GREY	RIGID COLUMN	URBIS	AXIA 2 S1	PETITJEAN	SHEET STEEL	8	PAINTED	THAMES
46100560	FIRST AVENUE	Flixborough Parish	486306.22	414628.19	9	7007	00187635	01/04/1978 00:00	2	1	LESS THAN 30MPH	VERGE	1000	SINGLE ARM	DARK GREY	RIGID COLUMN	URBIS	AXIA 2 S1	PETITJEAN	SHEET STEEL	8	PAINTED	THAMES
46100561	FIRTH LANE	Wroot Parish	471479.35	403053.79	1	7000	00187646	29/11/2018 00:00	6	3	LESS THAN 30MPH	ON POLE	300	SINGLE ARM	DARK GREY	POLE MOUNTED	URBIS	AXIA 2 S1	WOODEN PO	WOOD	5	PAINTED	PUDSEY DIAMOND
46100561	FIRTH LANE	Wroot Parish	471508.89	403076.51	2	7001	00187647	29/11/2018 00:00	6	3	LESS THAN 30MPH	ON POLE	300	SINGLE ARM	DARK GREY	POLE MOUNTED	URBIS	AXIA 2 S1	WOODEN PO	WOOD	5	PAINTED	PUDSEY DIAMOND
46100562	FLIXBOROUGH ROAD	Burton upon Stather Parish	487274.4	417365.24	1	7000	00187648	01/04/2005 00:00	2	3	LESS THAN 30MPH	VERGE	300	SINGLE ARM	NOT APPLICABLE	RIGID COLUMN	URBIS	AXIA 2 S1	MALLATITE	TUBULAR STEEL	6	GALVANISED	STEPPED TUBULAR
46100562	FLIXBOROUGH ROAD	Burton upon Stather Parish	487040.8	417303.25	10	7009	00187657	01/04/2005 00:00	2	3	LESS THAN 30MPH	ON POLE	300	SINGLE ARM	NOT APPLICABLE	POLE MOUNTED	URBIS	AXIA 2 S1	WOODEN PO	WOOD	5	NOT APPLICABI	Not Applicable
46100562	FLIXBOROUGH ROAD	Burton upon Stather Parish	487053.16	417283.08	11	7010	00187658	01/04/2005 00:00	2	3	LESS THAN 30MPH	BACK OF FOOTPATH	300	SINGLE ARM	NOT APPLICABLE	RIGID COLUMN	URBIS	AXIA 2 S1	MALLATITE	TUBULAR STEEL	6	GALVANISED	STEPPED TUBULAR
46100562	FLIXBOROUGH ROAD	Burton upon Stather Parish	487044.9	417256.25	12	7011	00187659	01/04/2005 00:00	2	3	LESS THAN 30MPH	ON POLE	300	SINGLE ARM	NOT APPLICABLE	POLE MOUNTED	URBIS	AXIA 2 S1	WOODEN PO	WOOD	5	NOT APPLICABI	Not Applicable
46100562	FLIXBOROUGH ROAD	Burton upon Stather Parish	487043.07	417220.46	13	7012	00187660	01/04/2005 00:00	2	3	LESS THAN 30MPH	ON POLE	300	SINGLE ARM	NOT APPLICABLE	POLE MOUNTED	URBIS	AXIA 2 S1	WOODEN PO	WOOD	5	NOT APPLICABI	Not Applicable
46100562	FLIXBOROUGH ROAD	Burton upon Stather Parish	487040.54	417167.92	14	7013	00187661	01/04/2005 00:00	2	3	LESS THAN 30MPH	ON POLE	300	SINGLE ARM	NOT APPLICABLE	POLE MOUNTED	URBIS	AXIA 2 S1	WOODEN PO	WOOD	5	NOT APPLICABI	Not Applicable
46100562	FLIXBOROUGH ROAD	Burton upon Stather Parish	487040.03	417131.08	15	7014	00187662	01/04/2005 00:00	2	3	LESS THAN 30MPH	ON POLE	300	SINGLE ARM	NOT APPLICABLE	POLE MOUNTED	URBIS	AXIA 2 S1	WOODEN PO	WOOD	5	NOT APPLICABI	Not Applicable
46100562	FLIXBOROUGH ROAD	Burton upon Stather Parish	487048.24	417110.7	16	7015	00187663	01/04/2005 00:00	2	3	LESS THAN 30MPH	BACK OF FOOTPATH	300	SINGLE ARM	NOT APPLICABLE	RIGID COLUMN	URBIS	AXIA 2 S1	MALLATITE	TUBULAR STEEL	6	GALVANISED	STEPPED TUBULAR
46100562	FLIXBOROUGH ROAD	Burton upon Stather Parish	487038.75	417085.34	17	7016	00187664	01/04/2005 00:00	2	3	LESS THAN 30MPH	ON POLE	300	SINGLE ARM	NOT APPLICABLE	POLE MOUNTED	URBIS	AXIA 2 S1	WOODEN PO	WOOD	5	NOT APPLICABI	Not Applicable
46100562	FLIXBOROUGH ROAD	Burton upon Stather Parish	487010.27	417084.37	18	7017	00187665	01/04/2005 00:00	2	3	LESS THAN 30MPH	VERGE	300	SINGLE ARM	NOT APPLICABLE	RIGID COLUMN	URBIS	AXIA 2 S1	MALLATITE	TUBULAR STEEL	6	GALVANISED	STEPPED TUBULAR
46100562	FLIXBOROUGH ROAD	Burton upon Stather Parish	486980.47	417083.74	19	7018	00187666	01/04/2005 00:00	2	3	LESS THAN 30MPH	VERGE	300	SINGLE ARM	NOT APPLICABLE	RIGID COLUMN	URBIS	AXIA 2 S1	MALLATITE	TUBULAR STEEL	6	GALVANISED	STEPPED TUBULAR
46100562	FLIXBOROUGH ROAD	Burton upon Stather Parish	487247.51	417347.23	2	7001	00187649	01/04/2005 00:00	2	3	LESS THAN 30MPH	BACK OF FOOTPATH	300	SINGLE ARM	NOT APPLICABLE	RIGID COLUMN	URBIS	AXIA 2 S1	MALLATITE	TUBULAR STEEL	6	GALVANISED	STEPPED TUBULAR
46100562	FLIXBOROUGH ROAD	Burton upon Stather Parish	486955.05	417082.38	20	7019	00187667	01/04/2005 00:00	2	3	LESS THAN 30MPH	VERGE	300	SINGLE ARM	NOT APPLICABLE	RIGID COLUMN	URBIS	AXIA 2 S1	MALLATITE	TUBULAR STEEL	6	GALVANISED	STEPPED TUBULAR
46100562	FLIXBOROUGH ROAD	Burton upon Stather Parish	486931.93	417087.22	21	7020	00187668	01/04/2005 00:00	2	3	LESS THAN 30MPH	VERGE	300	SINGLE ARM	NOT APPLICABLE	RIGID COLUMN	URBIS	AXIA 2 S1	MALLATITE	TUBULAR STEEL	6	GALVANISED	STEPPED TUBULAR
46100562	FLIXBOROUGH ROAD	Burton upon Stather Parish	487218.29	417347.73	3	7002	00187650	01/04/2005 00:00	2	3	LESS THAN 30MPH	ON POLE	300	SINGLE ARM	NOT APPLICABLE	POLE MOUNTED	URBIS	AXIA 2 S1	WOODEN PO	WOOD	5	NOT APPLICABI	Not Applicable
46100562	FLIXBOROUGH ROAD	Burton upon Stather Parish	487178.71	417348.17	4	7003	00187651	01/04/2005 00:00	2	3	LESS THAN 30MPH	ON POLE	300	SINGLE ARM	NOT APPLICABLE	POLE MOUNTED	URBIS	AXIA 2 S1	WOODEN PO	WOOD	5	NOT APPLICABI	Not Applicable
46100562	FLIXBOROUGH ROAD	Burton upon Stather Parish	487143.07	417348.36	5	7004	00187652	01/04/2005 00:00	2	3	LESS THAN 30MPH	ON POLE	300	SINGLE ARM	NOT APPLICABLE	POLE MOUNTED	URBIS	AXIA 2 S1	WOODEN PO	WOOD	5	NOT APPLICABI	Not Applicable
46100562	FLIXBOROUGH ROAD	Burton upon Stather Parish	487098.71	417349.75	6	7005	00187653	01/04/2005 00:00	2	3	LESS THAN 30MPH	ON POLE	300	SINGLE ARM	NOT APPLICABLE	POLE MOUNTED	URBIS	AXIA 2 S1	WOODEN PO	WOOD	5	NOT APPLICABI	Not Applicable
46100562	FLIXBOROUGH ROAD	Burton upon Stather Parish	487065.33	417364.91	7	7006	00187654	01/04/2005 00:00	2	3	LESS THAN 30MPH	BACK OF FOOTPATH	300	SINGLE ARM	NOT APPLICABLE	RIGID COLUMN	URBIS	AXIA 2 S1	MALLATITE	TUBULAR STEEL	6	GALVANISED	STEPPED TUBULAR
46100562	FLIXBOROUGH ROAD	Burton upon Stather Parish	487046.51	417357.12	8	7007	00187655	01/04/2005 00:00	2	3	LESS THAN 30MPH	ON POLE	300	SINGLE ARM	NOT APPLICABLE	POLE MOUNTED	URBIS	AXIA 2 S1	WOODEN PO	WOOD	5	NOT APPLICABI	Not Applicable
46100562	FLIXBOROUGH ROAD	Burton upon Stather Parish	487054.69	417328.28	9	7008	00187656	01/04/2005 00:00	2	3	LESS THAN 30MPH	BACK OF FOOTPATH	300	SINGLE ARM	NOT APPLICABLE	RIGID COLUMN	URBIS	AXIA 2 S1	MALLATITE	TUBULAR STEEL	6	GALVANISED	STEPPED TUBULAR
46100563	FORD LANE	Hibaldstow Parish	497813.98	402557.32	1	7000	00187669	01/04/1999 00:00	1	4	LESS THAN 30MPH	BACK OF FOOTPATH	0	POST TOP	NOT APPLICABLE	RIGID COLUMN	URBIS	AXIA 2 S1	PETITJEAN	TUBULAR STEEL	5	GALVANISED	STEPPED TUBULAR
46100563	FORD LANE	Hibaldstow Parish	497817.85	402587.31	2	7001	00187670	01/04/1999 00:00	1	4	LESS THAN 30MPH	BACK OF FOOTPATH	0	POST TOP	NOT APPLICABLE	RIGID COLUMN	URBIS	AXIA 2 S1	PETITJEAN	TUBULAR STEEL	5	GALVANISED	STEPPED TUBULAR
46100563	FORD LANE	Hibaldstow Parish	497810.79	402618.8	3	7002	00187671	01/04/1999 00:00	1	4	LESS THAN 30MPH	BACK OF FOOTPATH	0	POST TOP	NOT APPLICABLE	RIGID COLUMN	URBIS	AXIA 2 S1	PETITJEAN	TUBULAR STEEL	5	GALVANISED	STEPPED TUBULAR
46100563	FORD LANE	Hibaldstow Parish	497803.67	402646.37	4	7003	00187672	01/04/1999 00:00	1	4	LESS THAN 30MPH	BACK OF FOOTPATH	0	POST TOP	NOT APPLICABLE	RIGID COLUMN	URBIS	AXIA 2 S1	PETITJEAN	TUBULAR STEEL	5	GALVANISED	STEPPED TUBULAR
46100563	FORD LANE	Hibaldstow Parish	497795.96	402622.44	5	7004	00187673	01/04/2007 00:00	1	4	LESS THAN 30MPH	VERGE	0	POST TOP	NOT APPLICABLE	RIGID COLUMN	URBIS	AXIA 2 S1	PETITJEAN	TUBULAR STEEL	5	GALVANISED	STEPPED TUBULAR
46100563	FORD LANE	Hibaldstow Parish	497775.45	402620.79	6	7005	00187674	01/04/2007 00:00	1	4	LESS THAN 30MPH	VERGE	0	POST TOP	NOT APPLICABLE	RIGID COLUMN	URBIS	AXIA 2 S1	PETITJEAN	TUBULAR STEEL	5	GALVANISED	STEPPED TUBULAR
46100565	FORKEDALE	Barton upon Humber Parish	502273.71	421711.51	1	7000	00187675	01/04/1981 00:00	5	2	LESS THAN 30MPH	BACK OF FOOTPATH	300	SINGLE ARM	MID GREY	RIGID COLUMN	URBIS	AXIA 2 S1	PETITJEAN	SHEET STEEL	5	PAINTED	DAER
46100565	FORKEDALE	Barton upon Humber Parish	502353.5	421467.38	10	7009	00187684	01/04/2008 00:00	5	2	LESS THAN 30MPH	BACK OF FOOTPATH	0	POST TOP	NOT APPLICABLE	RIGID COLUMN	URBIS	AXIA 2 S1	BRITISH STEE	TUBULAR STEEL	6	GALVANISED	ASH
46100565	FORKEDALE	Barton upon Humber Parish	502371.14	421443.32	11	7010	00187685	01/04/2008 00:00	5	2	LESS THAN 30MPH	BACK OF FOOTPATH	0	POST TOP	NOT APPLICABLE	RIGID COLUMN	URBIS	AXIA 2 S1	BRITISH STEE	TUBULAR STEEL	6	GALVANISED	ASH
46100565	FORKEDALE	Barton upon Humber Parish	502399.8	421435.32	12	7011	00187686	01/04/2008 00:00	5	2	LESS THAN 30MPH	BACK OF FOOTPATH	0	POST TOP	NOT APPLICABLE	RIGID COLUMN	URBIS	AXIA 2 S1	BRITISH STEE	TUBULAR STEEL	6	GALVANISED	ASH
46100565	FORKEDALE	Barton upon Humber Parish	502431.68	421439.91	13	7012	00187687	11/06/2019 00:00	5	2	LESS THAN 30MPH	FRONT OF FOOTPATH	0	POST TOP	NOT APPLICABLE	RIGID COLUMN	URBIS	AXIA 2 S1	MALLATITE	TUBULAR STEEL	6	GALVANISED	TUBULAR
46100565	FORKEDALE	Barton upon Humber Parish	502462.22	421428.59	14	7013	00187688	11/06/2019 00:00	5	2	LESS THAN 30MPH	FRONT OF FOOTPATH	0	POST TOP	NOT APPLICABLE	RIGID COLUMN	URBIS	AXIA 2 S1	MALLATITE	TUBULAR STEEL	6	GALVANISED	TUBULAR
46100565	FORKEDALE	Barton upon Humber Parish	502497.77	421432.77	15	7014	00187689	11/06/2019 00:00	5	2	LESS THAN 30MPH	FRONT OF FOOTPATH	0	POST TOP	NOT APPLICABLE	RIGID COLUMN	URBIS	AXIA 2 S1	MALLATITE	TUBULAR STEEL	6	GALVANISED	TUBULAR
46100565	FORKEDALE	Barton upon Humber Parish	502523.47	421422.26	16	7015	00187690	01/04/1998 00:00	5	2	LESS THAN 30MPH	FRONT OF FOOTPATH	300	SINGLE ARM	NOT APPLICABLE	RIGID COLUMN	URBIS	AXIA 2 S1	T AND L	TUBULAR STEEL	5	GALVANISED	STEPPED TUBULAR
46100565	FORKEDALE	Barton upon Humber Parish	502557.18	421427.25	17	7016	00187691	01/04/1981 00:00	5	2	LESS THAN 30MPH	FRONT OF FOOTPATH	300	SINGLE ARM	MID GREY	RIGID COLUMN	URBIS	AXIA 2 S1	PETITJEAN	SHEET STEEL	5	PAINTED	DAER
46100565	FORKEDALE	Barton upon Humber Parish	502270.6	421689.21	2	7001	00187676	01/04/1981 00:00	5	2	LESS THAN 30MPH	BACK OF FOOTPATH	300	SINGLE ARM	NOT APPLICABLE	RIGID COLUMN	URBIS	AXIA 2 S1	PETITJEAN	TUBULAR STEEL	5	GALVANISED	STEPPED TUBULAR
46100565	FORKEDALE	Barton upon Humber Parish	502291.6	421666.85	3	7002	00187677	01/04/2008 00:00	5	2	LESS THAN 30MPH	BACK OF FOOTPATH	0	POST TOP	NOT APPLICABLE	RIGID COLUMN	URBIS	AXIA 2 S1	BRITISH STEE	TUBULAR STEEL	6	GALVANISED	ASH
46100565	FORKEDALE	Barton upon Humber Parish	502294.02	421641.72	4	7003	00187678	01/04/1981 00:00	5	2	LESS THAN 30MPH	BACK OF FOOTPATH	300	SINGLE ARM	MID GREY	RIGID COLUMN	URBIS	AXIA 2 S1	PETITJEAN	SHEET STEEL	5	PAINTED	DAER
46100565	FORKEDALE	Barton upon Humber Parish	502314.36	421617.54	5	7004	00187679	01/04/2008 00:00	5	2	LESS THAN 30MPH	BACK OF FOOTPATH	0	POST TOP	NOT APPLICABLE	RIGID COLUMN	URBIS	AXIA 2 S1	BRITISH STEE	TUBULAR STEEL	6	GALVANISED	ASH
46100565	FORKEDALE	Barton upon Humber Parish	502325.24	421591.26	6	7005	00187680	01/04/2008 00:00	5	2	LESS THAN 30MPH	BACK OF FOOTPATH	0	POST TOP	NOT APPLICABLE	RIGID COLUMN	URBIS	AXIA 2 S1	BRITISH STEE	TUBULAR STEEL	6	GALVANISED	ASH
46100565	FORKEDALE	Barton upon Humber Parish	502325.47	421563.26	7	7006	00187681	01/04/2008 00:00	5	2	LESS THAN 30MPH	BACK OF FOOTPATH	0	POST TOP	NOT APPLICABLE	RIGID COLUMN	URBIS	AXIA 2 S1	BRITISH STEE	TUBULAR STEEL	6	GALVANISED	ASH
46100565	FORKEDALE	Barton upon Humber Parish	502337.69	421530.08	8	7007	00187682	01/04/2008 00:00	5	2	LESS THAN 30MPH	BACK OF FOOTPATH	0	POST TOP	NOT APPLICABLE	RIGID COLUMN	URBIS	AXIA 2 S1	BRITISH STEE	TUBULAR STEEL	6	GALVANISED	ASH
46100565	FORKEDALE	Barton upon Humber Parish	502333.53	421495.15	9	7008	00187683	01/04/2008 00:00	5	2	LESS THAN 30MPH	BACK OF FOOTPATH	0	POST TOP	NOT APPLICABLE	RIGID COLUMN	URBIS	AXIA 2 S1	BRITISH STEE	TUBULAR STEEL	6	GALVANISED	ASH
46100566	FORRESTER STREET	Brigg Parish	499742.78

46100579	FRODINGHAM ROAD	Scunthorpe	489075.63	411911.6	20	7019	00187859	01/04/2012 00:00	4	4	LESS THAN 30MPH	BACK OF FOOTPATH	1000	SINGLE ARM	NOT APPLICABLE	RIGID COLUMN	URBIS	AXIA 2 S1	VALMONT ST	SHEET STEEL	8	GALVANISED	THAMES
46100579	FRODINGHAM ROAD	Scunthorpe	489072.15	411932.51	21	7020	00187860	01/04/2012 00:00	4	4	LESS THAN 30MPH	FRONT OF FOOTPATH	500	SINGLE ARM	NOT APPLICABLE	RIGID COLUMN	URBIS	AXIA 2 S1	VALMONT ST	SHEET STEEL	8	GALVANISED	THAMES
46100579	FRODINGHAM ROAD	Scunthorpe	489066.28	411963.33	22	7021	00187861	01/04/2012 00:00	4	4	LESS THAN 30MPH	FRONT OF FOOTPATH	500	SINGLE ARM	NOT APPLICABLE	RIGID COLUMN	URBIS	AXIA 2 S1	VALMONT ST	SHEET STEEL	8	GALVANISED	THAMES
46100579	FRODINGHAM ROAD	Scunthorpe	489069.45	411999.36	23	7022	00187862	22/04/2020 00:00	4	4	LESS THAN 30MPH	BACK OF FOOTPATH	1000	SINGLE ARM	NOT APPLICABLE	RIGID COLUMN	URBIS	AXIA 2 S1	MALLATITE	TUBULAR STEEL	8	GALVANISED	TUBULAR
46100579	FRODINGHAM ROAD	Scunthorpe	489055.08	412026.52	24	7023	00187863	01/04/2012 00:00	4	4	LESS THAN 30MPH	FRONT OF FOOTPATH	500	SINGLE ARM	NOT APPLICABLE	RIGID COLUMN	URBIS	AXIA 2 S1	VALMONT ST	SHEET STEEL	8	GALVANISED	THAMES
46100579	FRODINGHAM ROAD	Scunthorpe	489050	412056.59	25	7024	00187864	22/04/2020 00:00	4	4	LESS THAN 30MPH	BACK OF FOOTPATH	1000	SINGLE ARM	NOT APPLICABLE	RIGID COLUMN	URBIS	AXIA 2 S1	MALLATITE	TUBULAR STEEL	8	GALVANISED	TUBULAR
46100579	FRODINGHAM ROAD	Scunthorpe	489052.32	412094.76	26FP	7025	00187865	22/04/2020 00:00	4	4	LESS THAN 30MPH	BACK OF FOOTPATH	1000	SINGLE ARM	NOT APPLICABLE	RIGID COLUMN	URBIS	AXIA 2 S1	MALLATITE	TUBULAR STEEL	8	GALVANISED	TUBULAR
46100579	FRODINGHAM ROAD	Scunthorpe	489045.94	412131.46	27	7026	00187866	01/04/2012 00:00	4	4	LESS THAN 30MPH	FRONT OF FOOTPATH	500	SINGLE ARM	NOT APPLICABLE	RIGID COLUMN	URBIS	AXIA 2 S1	VALMONT ST	SHEET STEEL	8	GALVANISED	THAMES
46100579	FRODINGHAM ROAD	Scunthorpe	489133.8	411629.3	2BB	7030	00187870	01/04/2015 00:00	4	4	LESS THAN 30MPH	FRONT OF FOOTPATH	0	POST TOP	BLACKWHITE	RIGID COLUMN	WRTL	STELA WIDE 52 LED	MALLATITE	TUBULAR STEEL	6	GALVANISED	TUBULAR
46100579	FRODINGHAM ROAD	Scunthorpe	489162.44	411407.72	3	7004	00187844	19/03/2024 00:00	4	4	LESS THAN 30MPH	FRONT OF FOOTPATH	1000	SINGLE ARM	NOT APPLICABLE	RIGID COLUMN	URBIS	AXIA 2 S1	STANTON	TUBULAR STEEL	10	GALVANISED	TUBULAR
46100579	FRODINGHAM ROAD	Scunthorpe	489100.69	411781.17	3BB	7027	00187867	01/04/2013 00:00	4	4	LESS THAN 30MPH	FRONT OF FOOTPATH	0	POST TOP	BLACKWHITE	RIGID COLUMN	WRTL	STELA WIDE 52 LED	MALLATITE	TUBULAR STEEL	6	GALVANISED	TUBULAR
46100579	FRODINGHAM ROAD	Scunthorpe	489168.44	411438.95	4	7005	00187845	19/03/2024 00:00	4	4	LESS THAN 30MPH	FRONT OF FOOTPATH	1000	SINGLE ARM	NOT APPLICABLE	RIGID COLUMN	URBIS	AXIA 2 S1	STANTON	TUBULAR STEEL	10	GALVANISED	TUBULAR
46100579	FRODINGHAM ROAD	Scunthorpe	489107.36	411785.37	4BB	7028	00187868	01/04/2013 00:00	4	4	LESS THAN 30MPH	FRONT OF FOOTPATH	0	POST TOP	BLACKWHITE	RIGID COLUMN	WRTL	STELA WIDE 52 LED	MALLATITE	TUBULAR STEEL	6	GALVANISED	TUBULAR
46100579	FRODINGHAM ROAD	Scunthorpe	489152.61	411466.91	5	7006	00187846	19/03/2024 00:00	4	4	LESS THAN 30MPH	FRONT OF FOOTPATH	800	SINGLE ARM	BLACK	RIGID COLUMN	URBIS	ALBANY	STANTON	TUBULAR STEEL	10	PAINTED	TUBULAR
46100579	FRODINGHAM ROAD	Scunthorpe	489157.84	411499.46	6FP	7007	00187847	19/03/2024 00:00	4	4	LESS THAN 30MPH	FRONT OF FOOTPATH	800	SINGLE ARM	BLACK	RIGID COLUMN	URBIS	ALBANY	STANTON	TUBULAR STEEL	10	PAINTED	TUBULAR
46100579	FRODINGHAM ROAD	Scunthorpe	489141.76	411529.63	7	7008	00187848	19/03/2024 00:00	4	4	LESS THAN 30MPH	FRONT OF FOOTPATH	800	SINGLE ARM	BLACK	RIGID COLUMN	URBIS	ALBANY	STANTON	TUBULAR STEEL	10	PAINTED	TUBULAR
46100579	FRODINGHAM ROAD	Scunthorpe	489147.37	411562	8	7009	00187849	19/03/2024 00:00	4	4	LESS THAN 30MPH	FRONT OF FOOTPATH	800	SINGLE ARM	BLACK	RIGID COLUMN	URBIS	ALBANY	STANTON	TUBULAR STEEL	10	PAINTED	TUBULAR
46100579	FRODINGHAM ROAD	Scunthorpe	489131.34	411591.9	9	7010	00187850	19/03/2024 00:00	4	4	LESS THAN 30MPH	FRONT OF FOOTPATH	800	SINGLE ARM	BLACK	RIGID COLUMN	URBIS	ALBANY	STANTON	TUBULAR STEEL	10	PAINTED	TUBULAR
46100579	FRODINGHAM ROAD	Scunthorpe	489042	412105	BB5	7032	04200517	22/04/2020 00:00	4	4	LESS THAN 30MPH	FRONT OF FOOTPATH	0	POST TOP	BLACKWHITE	RIGID COLUMN	URBIS	AXIA 2 S1	NOT APPLICA	TUBULAR STEEL	6	PAINTED	UNKNOWN
46100579	FRODINGHAM ROAD	Scunthorpe	489050	412106	BB6	7031	04200516	22/04/2020 00:00	4	4	LESS THAN 30MPH	FRONT OF FOOTPATH	0	POST TOP	BLACKWHITE	RIGID COLUMN	URBIS	AXIA 2 S1	NOT APPLICA	TUBULAR STEEL	6	PAINTED	UNKNOWN
46100581	FRONT STREET	Alkborough Parish	488250.98	421811.33	1	7000	00187871	18/06/2018 00:00	1	2	LESS THAN 30MPH	ON POLE	300	SINGLE ARM	NOT APPLICABLE	POLE MOUNTED	URBIS	AXIA 2 S1	WOODEN PO	WOOD	5	NOT APPLICABI	PUDSEY DIAMOND
46100581	FRONT STREET	Alkborough Parish	488272.48	421773.57	2	7001	00187872	18/06/2018 00:00	1	2	LESS THAN 30MPH	ON POLE	300	SINGLE ARM	NOT APPLICABLE	POLE MOUNTED	URBIS	AXIA 2 S1	WOODEN PO	WOOD	5	NOT APPLICABI	PUDSEY DIAMOND
46100581	FRONT STREET	Alkborough Parish	488251.56	421757.3	3	7002	00187873	24/05/2018 00:00	1	2	LESS THAN 30MPH	ON POLE	300	SINGLE ARM	NOT APPLICABLE	POLE MOUNTED	URBIS	AXIA 2 S1	WOODEN PO	WOOD	5	NOT APPLICABI	PUDSEY DIAMOND
46100581	FRONT STREET	Alkborough Parish	488237.04	421724.18	4	7003	00187874	24/05/2018 00:00	1	2	LESS THAN 30MPH	ON POLE	300	SINGLE ARM	NOT APPLICABLE	POLE MOUNTED	URBIS	AXIA 2 S1	WOODEN PO	WOOD	5	NOT APPLICABI	PUDSEY DIAMOND
46100581	FRONT STREET	Alkborough Parish	488228.74	421702.9	5	7004	00187875	01/04/1993 00:00	1	2	LESS THAN 30MPH	VERGE	300	SINGLE ARM	NOT APPLICABLE	RIGID COLUMN	URBIS	AXIA 2 S1	PETITJEAN	SHEET STEEL	5	NOT APPLICABI	DAER
46100581	FRONT STREET	Alkborough Parish	488214.79	421674.43	6FP	7006	00187877	01/04/1993 00:00	1	2	LESS THAN 30MPH	VERGE	300	SINGLE ARM	NOT APPLICABLE	RIGID COLUMN	URBIS	AXIA 2 S1	PETITJEAN	SHEET STEEL	5	NOT APPLICABI	DAER
46100581	FRONT STREET	Alkborough Parish	488199.72	421643.97	7	7005	00187876	01/04/1993 00:00	1	2	LESS THAN 30MPH	VERGE	300	SINGLE ARM	NOT APPLICABLE	RIGID COLUMN	URBIS	AXIA 2 S1	PETITJEAN	SHEET STEEL	5	NOT APPLICABI	DAER
46100581	FRONT STREET	Alkborough Parish	488188.1	421620.15	8FP	7007	00187878	01/04/1993 00:00	1	2	LESS THAN 30MPH	VERGE	300	SINGLE ARM	NOT APPLICABLE	RIGID COLUMN	URBIS	AXIA 2 S1	PETITJEAN	SHEET STEEL	5	NOT APPLICABI	DAER
46100582	FRONT STREET	Elsham Parish	503650.78	412393.5	1	7000	00187879	01/04/1988 00:00	6	1	LESS THAN 30MPH	BACK OF FOOTPATH	0	POST TOP	MID GREY	RIGID COLUMN	URBIS	AXIA 2 S1	PETITJEAN	SHEET STEEL	5	PAINTED	NIDD
46100582	FRONT STREET	Elsham Parish	503622.12	412384.58	2FP	7001	00187880	01/04/1988 00:00	6	1	LESS THAN 30MPH	BACK OF FOOTPATH	0	POST TOP	MID GREY	RIGID COLUMN	URBIS	AXIA 2 S1	PETITJEAN	SHEET STEEL	5	PAINTED	NIDD
46100582	FRONT STREET	Elsham Parish	503595.79	412372.75	3	7002	00187881	01/04/1988 00:00	6	1	LESS THAN 30MPH	BACK OF FOOTPATH	0	POST TOP	MID GREY	RIGID COLUMN	URBIS	AXIA 2 S1	PETITJEAN	SHEET STEEL	5	PAINTED	NIDD
46100582	FRONT STREET	Elsham Parish	503566.47	412350.16	4	7003	00187882	01/04/1988 00:00	6	1	LESS THAN 30MPH	BACK OF FOOTPATH	0	POST TOP	MID GREY	RIGID COLUMN	URBIS	AXIA 2 S1	PETITJEAN	SHEET STEEL	5	PAINTED	NIDD
46100582	FRONT STREET	Elsham Parish	503541.55	412321.33	5	7004	00187883	01/04/1988 00:00	6	1	LESS THAN 30MPH	BACK OF FOOTPATH	0	POST TOP	MID GREY	RIGID COLUMN	URBIS	AXIA 2 S1	PETITJEAN	SHEET STEEL	5	PAINTED	NIDD
46100582	FRONT STREET	Elsham Parish	503523.25	412290.66	6	7005	00187884	01/04/1988 00:00	6	1	LESS THAN 30MPH	VERGE	0	POST TOP	MID GREY	RIGID COLUMN	URBIS	AXIA 2 S1	PETITJEAN	SHEET STEEL	5	PAINTED	NIDD
46100582	FRONT STREET	Elsham Parish	503499.4	412264.68	7	7006	00187885	01/04/1988 00:00	6	1	LESS THAN 30MPH	VERGE	0	POST TOP	MID GREY	RIGID COLUMN	URBIS	AXIA 2 S1	PETITJEAN	SHEET STEEL	5	PAINTED	NIDD
46100582	FRONT STREET	Elsham Parish	503480.89	412242.96	8	7007	00187886	01/04/1988 00:00	6	1	LESS THAN 30MPH	VERGE	0	POST TOP	MID GREY	RIGID COLUMN	URBIS	AXIA 2 S1	PETITJEAN	SHEET STEEL	5	PAINTED	NIDD
46100582	FRONT STREET	Elsham Parish	503452.22	412226.73	9	7008	00187887	01/04/1988 00:00	6	1	LESS THAN 30MPH	BACK OF FOOTPATH	0	POST TOP	MID GREY	RIGID COLUMN	URBIS	AXIA 2 S1	PETITJEAN	SHEET STEEL	5	PAINTED	NIDD
46100583	FRONT STREET	Ulceby Parish	510515.08	414744.45	1	7000	00187888	01/04/1973 00:00	3	1	LESS THAN 30MPH	BACK OF FOOTPATH	300	SINGLE ARM	MID GREY	RIGID COLUMN	URBIS	AXIA 2 S1	PETITJEAN	SHEET STEEL	6	PAINTED	DAER
46100583	FRONT STREET	Ulceby Parish	510780.96	414626.69	10	7009	00187897	01/04/1993 00:00	3	1	LESS THAN 30MPH	BACK OF FOOTPATH	500	SINGLE ARM	MID GREY	RIGID COLUMN	URBIS	AXIA 2 S1	PETITJEAN	SHEET STEEL	6	PAINTED	DAER
46100583	FRONT STREET	Ulceby Parish	510811.34	414618.49	11	7010	00187898	01/04/1993 00:00	3	1	LESS THAN 30MPH	BACK OF FOOTPATH	500	SINGLE ARM	MID GREY	RIGID COLUMN	URBIS	AXIA 2 S1	PETITJEAN	SHEET STEEL	6	PAINTED	DAER
46100583	FRONT STREET	Ulceby Parish	510839.38	414602.04	12	7011	00187899	01/04/1993 00:00	3	1	LESS THAN 30MPH	BACK OF FOOTPATH	500	SINGLE ARM	MID GREY	RIGID COLUMN	URBIS	AXIA 2 S1	PETITJEAN	SHEET STEEL	6	PAINTED	DAER
46100583	FRONT STREET	Ulceby Parish	510883.99	414606.53	13	7012	00187900	01/04/1973 00:00	3	1	LESS THAN 30MPH	ON POLE	800	SINGLE ARM	NOT APPLICABLE	POLE MOUNTED	URBIS	AXIA 2 S1	WOODEN PO	WOOD	6	NOT APPLICABI	Not Applicable
46100583	FRONT STREET	Ulceby Parish	510921.91	414610.93	14	7013	00187901	01/04/1973 00:00	3	1	LESS THAN 30MPH	ON POLE	800	SINGLE ARM	NOT APPLICABLE	POLE MOUNTED	URBIS	AXIA 2 S1	WOODEN PO	WOOD	6	NOT APPLICABI	Not Applicable
46100583	FRONT STREET	Ulceby Parish	510520.36	414705.78	2	7001	00187889	01/04/1973 00:00	3	1	LESS THAN 30MPH	BACK OF FOOTPATH	300	SINGLE ARM	MID GREY	RIGID COLUMN	URBIS	AXIA 2 S1	PETITJEAN	SHEET STEEL	5	PAINTED	DAER
46100583	FRONT STREET	Ulceby Parish	510532.22	414673.46	3	7002	00187890	01/04/1973 00:00	3	1	LESS THAN 30MPH	VERGE	300	SINGLE ARM	MID GREY	RIGID COLUMN	URBIS	AXIA 2 S1	PETITJEAN	SHEET STEEL	5	PAINTED	DAER
46100583	FRONT STREET	Ulceby Parish	510565.65	414682.73	4	7003	00187891	01/04/1973 00:00	3	1	LESS THAN 30MPH	VERGE	300	SINGLE ARM	MID GREY	RIGID COLUMN	URBIS	AXIA 2 S1	PETITJEAN	SHEET STEEL	5	PAINTED	DAER
46100583	FRONT STREET	Ulceby Parish	510596.58	414687.92	5	7004	00187892	20/08/2021 00:00	3	1	LESS THAN 30MPH	BACK OF FOOTPATH	0	POST TOP	NOT APPLICABLE	RIGID COLUMN	URBIS	AXIA 2 S1	MALLATITE	TUBULAR STEEL	6	GALVANISED	TUBULAR
46100583	FRONT STREET	Ulceby Parish	510636.93	414693.85	6	7005	00187893	01/04/1973 00:00	3	1	LESS THAN 30MPH	BACK OF FOOTPATH	300	SINGLE ARM	MID GREY	RIGID COLUMN	URBIS	AXIA 2 S1	PETITJEAN	SHEET STEEL	5	PAINTED	DAER
46100583	FRONT STREET	Ulceby Parish	510673.99	414687.84	7	7006	00187894	01/04/1973 00:00	3	1	LESS THAN 30MPH	ON POLE	800	SINGLE ARM	NOT APPLICABLE	POLE MOUNTED	URBIS	AXIA 2 S1	WOODEN PO	WOOD	6	NOT APPLICABI	Not Applicable
46100583	FRONT STREET	Ulceby Parish	510703.46	414643.54	8	7007	00187895	01/04/1980 00:00	3	1	LESS THAN 30MPH	ON POLE	500	SINGLE ARM	NOT APPLICABLE	POLE MOUNTED	URBIS	AXIA 2 S1	WOODEN PO	WOOD	5	NOT APPLICABI	Not Applicable
46100583	FRONT STREET	Ulceby Parish	510748.35	414626.5	9	7008	00187896	01/04/1993 00:00	3	1	LESS THAN 30MPH	VERGE	500	SINGLE ARM	MID GREY	RIGID COLUMN	URBIS	AXIA 2 S1	PETITJEAN	SHEET STEEL	6	PAINTED	DAER
46100584	FROST CLOSE	Winteringham Parish	493057.72	422005.46	1	7000	00187902	01/04/1993 00:00	1	3	LESS THAN 30MPH	BACK OF FOOTPATH	300	SINGLE ARM	NOT APPLICABLE	RIGID COLUMN	URBIS	AXIA 2 S1	PETITJEAN	SHEET STEEL	6	GALVANISED	DAER
46100584	FROST CLOSE	Winteringham Parish	493025.25	422007.38	2	7001	00187903	01/04/1993 00:00	1	3	LESS THAN 30MPH	BACK OF FOOTPATH	300	SINGLE ARM	NOT APPLICABLE	RIGID COLUMN	URBIS	AXIA 2 S1	PETITJEAN	SHEET STEEL	6	GALVANISED	DAER
46100584	FROST CLOSE	Winteringham Parish	492997.92	421999.27	3	7002	00187904	01/04/1993 00:00	1	3	LESS THAN 30MPH	VERGE	300	SINGLE ARM	NOT APPLICABLE	RIGID COLUMN	URBIS	AXIA 2 S1	PETITJEAN	SHEET STEEL	6	GALVANISED	DAER
46100584	FROST CLOSE	Winteringham Parish	492968.91	421999.65	4	7003	00187905	01/04/1993 00:00	1	3	LESS THAN 30MPH	BACK OF FOOTPATH	300	SINGLE ARM	NOT APPLICABLE	RIGID COLUMN	URBIS	AXIA 2 S1	PETITJEAN	SHEET STEEL	6	GALVANISED	DAER
46100584	FROST CLOSE	Winteringham Parish	492947.14	422008.06	5	7004	00187906	01/05/2014 00:00	1	3	LESS THAN 30MPH	BACK OF FOOTPATH	0	POST TOP	NOT APPLICABLE	RIGID COLUMN	URBIS	AXIA 2 S1	MALLATITE	TUBULAR STEEL	6	GALVANISED	TUBULAR
46100584	FROST CLOSE	Winteringham Parish	492920.73	422011.21	6	7005	00187907	01/04/1986 00:00	1	3	LESS THAN 30MPH	VERGE	0	POST TOP	NOT APPLICABLE	RIGID COLUMN	URBIS	AXIA 2 S1	PETITJEAN	SHEET STEEL	5	GALVANISED	NIDD
46100585	FULBECK ROAD	Scunthorpe	490281.83	409102.53	1	7000	00187908	01/04/1992 00:00	2	4	LESS THAN 30MPH	BACK OF FOOTPATH	0	POST TOP	NOT APPLICABLE	RIGID COLUMN	URBIS	AXIA 2 S1	PETITJEAN	SHEET STEEL	6	GALVANISED	DAER
46100585	FULBECK ROAD	Scunthorpe	490251.14	408843.66	10	7009	00187917	01/04/1992 00:00	2	4	LESS THAN 30MPH	BACK OF FOOTPATH	0	POST TOP	NOT APPLICABLE	RIGID COLUMN	URBIS	AXIA 2 S1	PETITJEAN	SHEET STEEL	6	GALVANISED	DAER
46100585	FULBECK ROAD	Scunthorpe	490236.26	408818.03	11	7010	00187918	01/04/1992 00:00	2	4	LESS THAN 30MPH	BACK OF FOOTPATH	0	POST TOP	NOT APPLICABLE	RIGID COLUMN	URBIS	AXIA 2 S1	PETITJEAN	SHEET STEEL	6	GALVANISED	DAER
46100585	FULBECK ROAD	Scunthorpe	490244.61	408788.72	12	7011	00187919	01/04/1992 00:00	2	4	LESS THAN 30MPH	BACK OF FOOTPATH	0	POST TOP	NOT APPLICABLE	RIGID COLUMN	URBIS	AXIA 2 S1	PETITJEAN	SHEET STEEL	6	GALVANISED	DAER
46100585	FULBECK ROAD	Scunthorpe	490220.14	408779.29	13	7012	00187920	01/04/1992 00:00	2	4	LESS THAN 30MPH	BACK OF FOOTPATH	0	POST TOP	NOT APPLICABLE	RIGID COLUMN	URBIS	AXIA 2 S1	PETITJEAN	SHEET STEEL	6	GALVANISED	DAER
46100585	FULBECK ROAD	Scunthorpe	490194.05	408794.09	14	7013	00187921	01/04/1992 00:00	2	4	LESS THAN 30MPH	BACK OF FOOTPATH	0	POST TOP	NOT APPLICABLE	RIGID COLUMN	URBIS	AXIA 2 S1	PETITJEAN	SHEET STEEL	6	GALVANISED	DAER
46100585	FULBECK ROAD	Scunthorpe	490161.73	408785.52	15FP	7014	00187922	01/04/1992 00:00	2	4	LESS THAN 30MPH	BACK OF FOOTPATH	0	POST TOP	NOT APPLICABLE	RIGID COLUMN	URBIS	AXIA 2 S1	PETITJEAN	SHEET STEEL	6	GALVANISED	DAER
46100585	FULBECK ROAD	Scunthorpe	490278.59	409075.7	2	7001	00187909	01/04/1992 00:00	2	4	LESS THAN 30MPH	BACK OF FOOTPATH	0	POST TOP	NOT APPLICABLE	RIGID COLUMN	URBIS	AXIA 2 S1	PETITJEAN	SHEET STEEL	6	GALVANISED	DAER
46100585	FULBECK ROAD	Scunthorpe	490262.98	409045.75	3	7002	00187910	01/04/1992 00:00	2	4	LESS THAN 30MPH	BACK OF FOOTPATH	0	POST TOP	NOT APPLICABLE	RIGID COLUMN	URBIS	AXIA 2 S1	PETITJEAN	SHEET STEEL	6	GALVANISED	DAER
46100585	FULBECK ROAD	Scunthorpe	490259.32	409017.28	4	7003	00187911	01/04/1992 00:00	2	4	LESS THAN 30MPH	BACK OF FOOTPATH	0	POST TOP	NOT APPLICABLE	RIGID COLUMN	URBIS	AXIA 2 S1	PETITJEAN	SHEET STEEL	6	GALVANISED	DAER
46100585	FULBECK ROAD	Scunthorpe	490268.06	408986.97	5	7004	00187912	01/04/1992 00:00	2	4	LESS THAN 30MPH	BACK OF FOOTPATH	0	POST TOP	NOT APPLICABLE	RIGID COLUMN	URBIS	AXIA 2 S1	PETITJEAN	SHEET STEEL	6	GALVANISED	DAER
46100585	FULBECK ROAD	Scunthorpe	490253.02	408962.2	6	7005	00187913	01/04/1992 00:00	2	4	LESS THAN 30MPH	BACK OF FOOTPATH	0	POST TOP	NOT APPLICABLE	RIGID COLUMN	URBIS	AXIA 2 S1	PETITJEAN	SHEET STEEL	6	GALVANISED	DAER
46100585	FULBECK ROAD	Scunthorpe	490261.53	408930.43	7	7006	00187914	01/04/1992 00:00	2	4	LESS THAN 30MPH	BACK OF FOOTPATH	0	POST TOP	NOT APPLICABLE	RIGID COLUMN	URBIS	AXIA 2 S1	PETITJEAN	SHEET STEEL	6	GALVANISED	DAER
46100585	FULBECK ROAD	Scunthorpe	490258.76	408905.61	8	7007	00187915	01/04/1992 00:00	2	4	LESS THAN 30MPH	BACK OF FOOTPATH	0	POST TOP	NOT APPLICABLE	RIGID COLUMN	URBIS	AXIA 2 S1	PETITJEAN	SHEET STEEL	6	GALVANISED	DAER
46100585	FULBECK ROAD	Scunthorpe	490242.86	408875.65	9	7008	00187916	01/04/1992 00:00	2	4	LESS THAN 30MPH	BACK OF FOOTPATH	0	POST TOP	NOT APPLICABLE	RIGID COLUMN	URBIS	AXIA 2 S1	PETITJEAN	SHEET STEEL	6	GALVANISED	DAER
46100586	FULFORD CRESCENT	New Holland Parish	508251.45	423743.2	1	7000	00187923	01/04/1995 00:00	4	1	LESS THAN 30MPH	BACK OF FOOTPATH	0	POST TOP	NOT APPLICABLE	RIGID COLUMN	URBIS	AXIA 2 S1	PETITJEAN	TUBULAR STEEL	5	GALVANISED	STEPPED TUBULAR
46100586	FULFORD CRESCENT	New Holland Parish	508216.84	423751.75	2	7001	00187924	01/04/1995 00:00	4	1	LESS THAN 30MPH	BACK OF FOOTPATH	0	POST TOP	NOT APPLICABLE	RIGID COLUMN	URBIS	AXIA 2 S1	PETITJEAN	TUBULAR STEEL	5	GALVANISED	STEPPED TUBULAR
46100586	FULFORD CRESCENT	New Holland Parish	508192.27	423740.16	3	7002	00187925	01/04/1995 00:00	4	1	LESS THAN 30MPH	BACK OF FOOTPATH	0	POST TOP	NOT APPLICABLE	RIGID COLUMN	URBIS	AXIA 2 S1	PETITJEAN	TUBULAR STEEL	5	GALVANISED	STEPPED TUBULAR
46100586	FULFORD CRESCENT	New Holland Parish	508165.51	423746.23	4	7003	00187926	01/04/1995 00:00	4	1	LESS THAN 30MPH	BACK OF FOOTPATH	0	POST TOP	NOT APPLICABLE	RIGID COLUMN	URBIS	AXIA 2 S1	PETITJEAN	TUBULAR STEEL	5	GALVANISED	STEPPED TUBULAR
46100586	FULFORD CRESCENT	New Holland Parish	508158.15	423773.23	5	7004	00187927	01/04/1995 00:00	4	1	LESS THAN 30MPH	BACK OF FOOTPATH	0	POST TOP	NOT APPLICABLE	RIGID COLUMN	URBIS	AXIA 2 S1	PETITJEAN	TUBULAR STEEL	5	GALVANISED	STEPPED TUBULAR
46100586	FULFORD CRESCENT	New Holland Parish	508157.92	423806.39	6	7005	00187928	01/04/1995 00:00	4	1	LESS THAN 30MPH	BACK OF FOOTPATH	0	POST TOP	NOT APPLICABLE	RIGID COLUMN	URBIS	AXIA 2 S1	PETITJEAN	TUBULAR STEEL	5	GALVANISED	STEPPED TUBULAR
46100587	GAINSBOROUGH LANE	Scawby Parish	496962.78	404901.12	1	7000	00187929	01/04/1980 00:00	2	2	LESS THAN 30MPH	VERGE	1250	SINGLE ARM	MID GREY	RIGID COLUMN	URBIS	AXIA 2 S1	PETITJEAN	SHEET STEEL	8	PAINTED	THAMES
46100587	GAINSBOROUGH LANE	Scawby Parish	497198.15	405020.33	10	7009	00187938	01/04/1984 00:00	2	2	LESS THAN 30MPH	VERGE	800	SINGLE ARM	MID GREY	RIGID COLUMN	URBIS	AXIA 2 S1	PETITJEAN	SHEET STEEL	6	PAINTED	DAER
46100587	GAINSBOROUGH LANE	Scawby Parish	497230.64	405040.79	11	7010	00187939	01/04/1984 00:00	2	2	LESS THAN 30MPH	BACK OF FOOTPATH	800	SINGLE ARM	MID GREY	RIGID COLUMN	URBIS	AXIA 2 S1	PETITJEAN	SHEET STEEL	6	PAINTED	DAER
46100587	GAINSBOROUGH LANE	Scawby Parish	497254.53	405068.67	12	7011	00187940	01/04/1984 00:00	2	2	LESS THAN 30MPH	VERGE	800	SINGLE ARM	MID GREY	RIGID COLUMN	URBIS	AXIA 2 S1	PETITJEAN	SHEET STEEL	6	PAINTED	DAER
46100587	GAINSBOROUGH LANE	Scawby Parish	497279.94	405100.91	13	7012	00187941	01/04/1984 00:00	2	2	LESS THAN 30MPH	VERGE	800	SINGLE ARM	MID GREY	RIGID COLUMN	URBIS	AXIA 2 S1	PETITJEAN	SHEET STEEL	6	PAINTED	DAER
46100587	GAINSBOROUGH LANE	Scawby Parish	497305.65	405132.29	14	7013	00187942	01/04/1984 00:00	2	2	LESS THAN 30MPH	VERGE	800	SINGLE ARM	MID GREY	RIGID COLUMN	URBIS	AXIA 2 S1	PETITJEAN	SHEET STEEL	6	PAINTED	DAER
46100587	GAINSBOROUGH LANE	Scawby Parish	497333.23	405167.36	15	7014	00187943	01/04/1984 00:00	2	2	LESS THAN 30MPH	VERGE	800	SINGLE ARM	MID GREY	RIGID COLUMN	URBIS	AXIA 2 S1	PETITJEAN	SHEET STEEL	6	PAINTED	DAER
46100587	GAINSBOROUGH LANE	Scawby Parish	497352.12	405190.14	16	7015	00187944	01/04/1984 00:00	2	2	LESS THAN 30MPH	VERGE	800	SINGLE ARM	MID GREY	RIGID COLUMN	URBIS	AXIA 2 S1	PETITJEAN	SHEET STEEL	6	PAINTED	DAER
46100587	GAINSBOROUGH LANE	Scawby Parish	497484.5	405372.22	17	7016	00187945	01/04/1980 00:00	2	2	GREATER THAN 50MPH	ON POLE	500	SINGLE ARM	NOT APPLICABLE	POLE MOUNTED	URBIS	AXIA 2 S1	WOODEN PO	WOOD	6	NOT APPLICABI	Not Applicable
46100587	GAINSBOROUGH LANE	Scawby Parish	497515.04	405406.27	18	7017	00187946	01/04/1980 00:00	2	2	GREATER THAN 50MPH	ON POLE	500	SINGLE ARM	NOT APPLICABLE	POLE MOUNTED	URBIS	AXIA 2 S1	WOODEN PO	WOOD	6	NOT APPLICABI	Not Applicable
46100587	GAINSBOROUGH LANE	Scawby Parish	496965.89	404919.82	2FP	7001	00187930	01/04/1980 00:00	2	2	LESS THAN

46100615	GLEBE WAY	Barton upon Humber Parish	504127.55	421659.92	4	7003	00188101	01/04/1975 00:00	5	2	LESS THAN 30MPH	BACK OF FOOTPATH	0	POST TOP	MID GREY	RIGID COLUMN	URBIS	AXIA 2 S1	PETITJEAN	SHEET STEEL	5	PAINTED	NIDD
46100615	GLEBE WAY	Barton upon Humber Parish	504124.33	421690.56	5	7004	00188102	01/04/1975 00:00	5	2	LESS THAN 30MPH	BACK OF FOOTPATH	0	POST TOP	MID GREY	RIGID COLUMN	URBIS	AXIA 2 S1	PETITJEAN	SHEET STEEL	5	PAINTED	NIDD
46100617	GLOUCESTER AVENUE	Scunthorpe	489680.29	409508.52	1	7000	00188103	01/04/1999 00:00	2	4	LESS THAN 30MPH	FRONT OF FOOTPATH	1000	SINGLE ARM	NOT APPLICABLE	RIGID COLUMN	URBIS	AXIA 2 S1	PETITJEAN	SHEET STEEL	8	GALVANISED	THAMES
46100617	GLOUCESTER AVENUE	Scunthorpe	489667.84	409345.83	10	7009	00188112	01/04/1999 00:00	2	4	LESS THAN 30MPH	FRONT OF FOOTPATH	1000	SINGLE ARM	NOT APPLICABLE	RIGID COLUMN	URBIS	AXIA 2 S1	PETITJEAN	SHEET STEEL	8	GALVANISED	THAMES
46100617	GLOUCESTER AVENUE	Scunthorpe	489684.37	409313.16	11FP	7010	00188113	01/04/1999 00:00	2	4	LESS THAN 30MPH	FRONT OF FOOTPATH	1000	SINGLE ARM	NOT APPLICABLE	RIGID COLUMN	URBIS	AXIA 2 S1	PETITJEAN	SHEET STEEL	8	GALVANISED	THAMES
46100617	GLOUCESTER AVENUE	Scunthorpe	489668.5	409312.43	12	7011	00188114	01/04/1999 00:00	2	4	LESS THAN 30MPH	FRONT OF FOOTPATH	1000	SINGLE ARM	NOT APPLICABLE	RIGID COLUMN	URBIS	AXIA 2 S1	PETITJEAN	SHEET STEEL	8	GALVANISED	THAMES
46100617	GLOUCESTER AVENUE	Scunthorpe	489668.79	409274.31	13	7012	00188115	01/04/1999 00:00	2	4	LESS THAN 30MPH	FRONT OF FOOTPATH	1000	SINGLE ARM	NOT APPLICABLE	RIGID COLUMN	URBIS	AXIA 2 S1	PETITJEAN	SHEET STEEL	8	GALVANISED	THAMES
46100617	GLOUCESTER AVENUE	Scunthorpe	489669.61	409252.35	14	7013	00188116	01/04/1999 00:00	2	4	LESS THAN 30MPH	FRONT OF FOOTPATH	1000	SINGLE ARM	NOT APPLICABLE	RIGID COLUMN	URBIS	AXIA 2 S1	PETITJEAN	SHEET STEEL	8	GALVANISED	THAMES
46100617	GLOUCESTER AVENUE	Scunthorpe	489686.22	409218.08	15	7014	00188117	01/04/1999 00:00	2	4	LESS THAN 30MPH	FRONT OF FOOTPATH	1000	SINGLE ARM	NOT APPLICABLE	RIGID COLUMN	URBIS	AXIA 2 S1	PETITJEAN	SHEET STEEL	8	GALVANISED	THAMES
46100617	GLOUCESTER AVENUE	Scunthorpe	489670.35	409218.82	16	7015	00188118	01/04/1999 00:00	2	4	LESS THAN 30MPH	FRONT OF FOOTPATH	1000	SINGLE ARM	NOT APPLICABLE	RIGID COLUMN	URBIS	AXIA 2 S1	PETITJEAN	SHEET STEEL	8	GALVANISED	THAMES
46100617	GLOUCESTER AVENUE	Scunthorpe	489687.25	409174.45	17	7016	00188119	01/04/1999 00:00	2	4	LESS THAN 30MPH	FRONT OF FOOTPATH	1000	SINGLE ARM	NOT APPLICABLE	RIGID COLUMN	URBIS	AXIA 2 S1	PETITJEAN	SHEET STEEL	8	GALVANISED	THAMES
46100617	GLOUCESTER AVENUE	Scunthorpe	489671.14	409173.23	18	7017	00188120	01/04/1999 00:00	2	4	LESS THAN 30MPH	FRONT OF FOOTPATH	1000	SINGLE ARM	NOT APPLICABLE	RIGID COLUMN	URBIS	AXIA 2 S1	PETITJEAN	SHEET STEEL	8	GALVANISED	THAMES
46100617	GLOUCESTER AVENUE	Scunthorpe	489688	409141.47	19	7018	00188121	01/04/1999 00:00	2	4	LESS THAN 30MPH	FRONT OF FOOTPATH	1000	SINGLE ARM	NOT APPLICABLE	RIGID COLUMN	URBIS	AXIA 2 S1	PETITJEAN	SHEET STEEL	8	GALVANISED	THAMES
46100617	GLOUCESTER AVENUE	Scunthorpe	489664.18	409506.57	2	7001	00188104	01/04/1999 00:00	2	4	LESS THAN 30MPH	FRONT OF FOOTPATH	1000	SINGLE ARM	NOT APPLICABLE	RIGID COLUMN	URBIS	AXIA 2 S1	PETITJEAN	SHEET STEEL	8	GALVANISED	THAMES
46100617	GLOUCESTER AVENUE	Scunthorpe	489671.89	409141.72	20	7019	00188122	01/04/1999 00:00	2	4	LESS THAN 30MPH	FRONT OF FOOTPATH	1000	SINGLE ARM	NOT APPLICABLE	RIGID COLUMN	URBIS	AXIA 2 S1	PETITJEAN	SHEET STEEL	8	GALVANISED	THAMES
46100617	GLOUCESTER AVENUE	Scunthorpe	489690.76	409119.83	21	7020	00188123	01/04/1999 00:00	2	4	LESS THAN 30MPH	BACK OF FOOTPATH	1000	SINGLE ARM	NOT APPLICABLE	RIGID COLUMN	URBIS	AXIA 2 S1	PETITJEAN	SHEET STEEL	8	GALVANISED	THAMES
46100617	GLOUCESTER AVENUE	Scunthorpe	489669.27	409116.65	22FP	7021	00188124	01/04/1999 00:00	2	4	LESS THAN 30MPH	BACK OF FOOTPATH	1000	SINGLE ARM	NOT APPLICABLE	RIGID COLUMN	URBIS	AXIA 2 S1	PETITJEAN	SHEET STEEL	8	GALVANISED	THAMES
46100617	GLOUCESTER AVENUE	Scunthorpe	489681.08	409473.68	3	7002	00188105	01/04/1999 00:00	2	4	LESS THAN 30MPH	FRONT OF FOOTPATH	1000	SINGLE ARM	NOT APPLICABLE	RIGID COLUMN	URBIS	AXIA 2 S1	PETITJEAN	SHEET STEEL	8	GALVANISED	THAMES
46100617	GLOUCESTER AVENUE	Scunthorpe	489664.72	409472.7	4	7003	00188106	01/04/1999 00:00	2	4	LESS THAN 30MPH	FRONT OF FOOTPATH	1000	SINGLE ARM	NOT APPLICABLE	RIGID COLUMN	URBIS	AXIA 2 S1	PETITJEAN	SHEET STEEL	8	GALVANISED	THAMES
46100617	GLOUCESTER AVENUE	Scunthorpe	489682.33	409431.88	5	7004	00188107	01/04/1999 00:00	2	4	LESS THAN 30MPH	FRONT OF FOOTPATH	1000	SINGLE ARM	NOT APPLICABLE	RIGID COLUMN	URBIS	AXIA 2 S1	PETITJEAN	SHEET STEEL	8	GALVANISED	THAMES
46100617	GLOUCESTER AVENUE	Scunthorpe	489665.49	409432.61	6	7005	00188108	01/04/1999 00:00	2	4	LESS THAN 30MPH	FRONT OF FOOTPATH	1000	SINGLE ARM	NOT APPLICABLE	RIGID COLUMN	URBIS	AXIA 2 S1	PETITJEAN	SHEET STEEL	8	GALVANISED	THAMES
46100617	GLOUCESTER AVENUE	Scunthorpe	489683.13	409389.8	7	7006	00188109	01/04/1999 00:00	2	4	LESS THAN 30MPH	FRONT OF FOOTPATH	1000	SINGLE ARM	NOT APPLICABLE	RIGID COLUMN	URBIS	AXIA 2 S1	PETITJEAN	SHEET STEEL	8	GALVANISED	THAMES
46100617	GLOUCESTER AVENUE	Scunthorpe	489666.53	409389.32	8	7007	00188110	01/04/1999 00:00	2	4	LESS THAN 30MPH	FRONT OF FOOTPATH	1000	SINGLE ARM	NOT APPLICABLE	RIGID COLUMN	URBIS	AXIA 2 S1	PETITJEAN	SHEET STEEL	8	GALVANISED	THAMES
46100617	GLOUCESTER AVENUE	Scunthorpe	489684.2	409346.32	9	7008	00188111	01/04/1999 00:00	2	4	LESS THAN 30MPH	FRONT OF FOOTPATH	1000	SINGLE ARM	NOT APPLICABLE	RIGID COLUMN	URBIS	AXIA 2 S1	PETITJEAN	SHEET STEEL	8	GALVANISED	THAMES
46100618	GLOVER ROAD	Scunthorpe	488487.02	409711.17	10	7009	00188134	01/04/1993 00:00	5	4	LESS THAN 30MPH	BACK OF FOOTPATH	800	SINGLE ARM	NOT APPLICABLE	RIGID COLUMN	URBIS	AXIA 2 S1	PETITJEAN	SHEET STEEL	6	GALVANISED	DAER
46100618	GLOVER ROAD	Scunthorpe	488474.74	409680.68	11	7010	00188135	01/04/1993 00:00	5	4	LESS THAN 30MPH	BACK OF FOOTPATH	800	SINGLE ARM	NOT APPLICABLE	RIGID COLUMN	URBIS	AXIA 2 S1	PETITJEAN	SHEET STEEL	6	GALVANISED	DAER
46100618	GLOVER ROAD	Scunthorpe	488487.35	409654.64	12	7011	00188136	01/04/1993 00:00	5	4	LESS THAN 30MPH	BACK OF FOOTPATH	800	SINGLE ARM	NOT APPLICABLE	RIGID COLUMN	URBIS	AXIA 2 S1	PETITJEAN	SHEET STEEL	6	GALVANISED	DAER
46100618	GLOVER ROAD	Scunthorpe	488476.4	409625.21	13	7012	00188137	01/04/1993 00:00	5	4	LESS THAN 30MPH	BACK OF FOOTPATH	800	SINGLE ARM	NOT APPLICABLE	RIGID COLUMN	URBIS	AXIA 2 S1	PETITJEAN	SHEET STEEL	6	GALVANISED	DAER
46100618	GLOVER ROAD	Scunthorpe	488476.73	409596.74	14	7013	00188138	01/04/1993 00:00	5	4	LESS THAN 30MPH	BACK OF FOOTPATH	800	SINGLE ARM	NOT APPLICABLE	RIGID COLUMN	URBIS	AXIA 2 S1	PETITJEAN	SHEET STEEL	6	GALVANISED	DAER
46100618	GLOVER ROAD	Scunthorpe	488478.19	409566.58	15	7014	00188139	01/04/1993 00:00	5	4	LESS THAN 30MPH	BACK OF FOOTPATH	800	SINGLE ARM	NOT APPLICABLE	RIGID COLUMN	URBIS	AXIA 2 S1	PETITJEAN	SHEET STEEL	6	GALVANISED	DAER
46100618	GLOVER ROAD	Scunthorpe	488491.32	409537.59	16	7015	00188140	01/04/1993 00:00	5	4	LESS THAN 30MPH	BACK OF FOOTPATH	800	SINGLE ARM	NOT APPLICABLE	RIGID COLUMN	URBIS	AXIA 2 S1	PETITJEAN	SHEET STEEL	6	GALVANISED	DAER
46100618	GLOVER ROAD	Scunthorpe	488481.65	409508.65	17	7016	00188141	01/04/1993 00:00	5	4	LESS THAN 30MPH	BACK OF FOOTPATH	800	SINGLE ARM	NOT APPLICABLE	RIGID COLUMN	URBIS	AXIA 2 S1	PETITJEAN	SHEET STEEL	6	GALVANISED	DAER
46100618	GLOVER ROAD	Scunthorpe	488495.73	409483.68	18	7017	00188142	01/04/1993 00:00	5	4	LESS THAN 30MPH	BACK OF FOOTPATH	800	SINGLE ARM	NOT APPLICABLE	RIGID COLUMN	URBIS	AXIA 2 S1	PETITJEAN	SHEET STEEL	6	GALVANISED	DAER
46100618	GLOVER ROAD	Scunthorpe	488498.22	409458.14	19	7018	00188143	01/04/1993 00:00	5	4	LESS THAN 30MPH	BACK OF FOOTPATH	800	SINGLE ARM	NOT APPLICABLE	RIGID COLUMN	URBIS	AXIA 2 S1	PETITJEAN	SHEET STEEL	6	GALVANISED	DAER
46100618	GLOVER ROAD	Scunthorpe	488494.84	409981.9	1FP	7000	00188125	01/04/1993 00:00	5	4	LESS THAN 30MPH	BACK OF FOOTPATH	800	SINGLE ARM	NOT APPLICABLE	RIGID COLUMN	URBIS	AXIA 2 S1	PETITJEAN	SHEET STEEL	6	GALVANISED	DAER
46100618	GLOVER ROAD	Scunthorpe	488486.22	409953.82	2	7001	00188126	01/04/1993 00:00	5	4	LESS THAN 30MPH	BACK OF FOOTPATH	800	SINGLE ARM	NOT APPLICABLE	RIGID COLUMN	URBIS	AXIA 2 S1	PETITJEAN	SHEET STEEL	6	GALVANISED	DAER
46100618	GLOVER ROAD	Scunthorpe	488488.42	409429.77	20	7019	00188144	01/04/1993 00:00	5	4	LESS THAN 30MPH	BACK OF FOOTPATH	1250	SINGLE ARM	NOT APPLICABLE	RIGID COLUMN	URBIS	AXIA 2 S1	PETITJEAN	SHEET STEEL	8	GALVANISED	THAMES
46100618	GLOVER ROAD	Scunthorpe	488492.8	409924.64	3	7002	00188127	01/04/1993 00:00	5	4	LESS THAN 30MPH	BACK OF FOOTPATH	800	SINGLE ARM	NOT APPLICABLE	RIGID COLUMN	URBIS	AXIA 2 S1	PETITJEAN	SHEET STEEL	6	GALVANISED	DAER
46100618	GLOVER ROAD	Scunthorpe	488478.51	409889.83	4	7003	00188128	01/04/1993 00:00	5	4	LESS THAN 30MPH	BACK OF FOOTPATH	800	SINGLE ARM	NOT APPLICABLE	RIGID COLUMN	URBIS	AXIA 2 S1	PETITJEAN	SHEET STEEL	6	GALVANISED	DAER
46100618	GLOVER ROAD	Scunthorpe	488489.96	409861.42	5	7004	00188129	01/04/1993 00:00	5	4	LESS THAN 30MPH	BACK OF FOOTPATH	800	SINGLE ARM	NOT APPLICABLE	RIGID COLUMN	URBIS	AXIA 2 S1	PETITJEAN	SHEET STEEL	6	GALVANISED	DAER
46100618	GLOVER ROAD	Scunthorpe	488489.12	409831.49	6	7005	00188130	01/04/1993 00:00	5	4	LESS THAN 30MPH	BACK OF FOOTPATH	800	SINGLE ARM	NOT APPLICABLE	RIGID COLUMN	URBIS	AXIA 2 S1	PETITJEAN	SHEET STEEL	6	GALVANISED	DAER
46100618	GLOVER ROAD	Scunthorpe	488476.21	409804.53	7	7006	00188131	01/04/1993 00:00	5	4	LESS THAN 30MPH	BACK OF FOOTPATH	800	SINGLE ARM	NOT APPLICABLE	RIGID COLUMN	URBIS	AXIA 2 S1	PETITJEAN	SHEET STEEL	6	GALVANISED	DAER
46100618	GLOVER ROAD	Scunthorpe	488474.91	409770.91	8	7007	00188132	01/04/1993 00:00	5	4	LESS THAN 30MPH	BACK OF FOOTPATH	800	SINGLE ARM	NOT APPLICABLE	RIGID COLUMN	URBIS	AXIA 2 S1	PETITJEAN	SHEET STEEL	6	GALVANISED	DAER
46100618	GLOVER ROAD	Scunthorpe	488474.81	409741.2	9	7008	00188133	01/04/1993 00:00	5	4	LESS THAN 30MPH	BACK OF FOOTPATH	800	SINGLE ARM	NOT APPLICABLE	RIGID COLUMN	URBIS	AXIA 2 S1	PETITJEAN	SHEET STEEL	6	GALVANISED	DAER
46100619	GLOVERS AVENUE	Burringham Parish	483814.34	409377.82	1	7000	00188145	01/04/1995 00:00	2	1	LESS THAN 30MPH	BACK OF FOOTPATH	0	POST TOP	NOT APPLICABLE	RIGID COLUMN	URBIS	AXIA 2 S1	PETITJEAN	SHEET STEEL	5	GALVANISED	NIDD
46100619	GLOVERS AVENUE	Burringham Parish	483820.37	409401.5	2	7001	00188146	01/04/1995 00:00	2	1	LESS THAN 30MPH	BACK OF FOOTPATH	0	POST TOP	NOT APPLICABLE	RIGID COLUMN	URBIS	AXIA 2 S1	PETITJEAN	SHEET STEEL	5	GALVANISED	NIDD
46100619	GLOVERS AVENUE	Burringham Parish	483834.43	409434.68	3	7002	00188147	01/04/1995 00:00	2	1	LESS THAN 30MPH	BACK OF FOOTPATH	0	POST TOP	NOT APPLICABLE	RIGID COLUMN	URBIS	AXIA 2 S1	PETITJEAN	SHEET STEEL	5	GALVANISED	NIDD
46100619	GLOVERS AVENUE	Burringham Parish	483844.75	409460.14	4	7003	00188148	01/04/1995 00:00	2	1	LESS THAN 30MPH	BACK OF FOOTPATH	0	POST TOP	NOT APPLICABLE	RIGID COLUMN	URBIS	AXIA 2 S1	PETITJEAN	SHEET STEEL	5	GALVANISED	NIDD
46100619	GLOVERS AVENUE	Burringham Parish	483864.91	409480.55	5	7004	00188149	01/04/1995 00:00	2	1	LESS THAN 30MPH	BACK OF FOOTPATH	0	POST TOP	NOT APPLICABLE	RIGID COLUMN	URBIS	AXIA 2 S1	PETITJEAN	SHEET STEEL	5	GALVANISED	NIDD
46100619	GLOVERS AVENUE	Burringham Parish	483877.54	409505.29	6	7005	00188150	01/04/1995 00:00	2	1	LESS THAN 30MPH	BACK OF FOOTPATH	0	POST TOP	NOT APPLICABLE	RIGID COLUMN	URBIS	AXIA 2 S1	PETITJEAN	SHEET STEEL	5	GALVANISED	NIDD
46100621	GODNOW ROAD	Crowle Parish	477349.97	412600	1	7030	00188155	04/06/2021 00:00	5	1	LESS THAN 30MPH	BACK OF FOOTPATH	1000	SINGLE ARM	NOT APPLICABLE	RIGID COLUMN	URBIS	AXIA 2 S1	MALLATITE	TUBULAR STEEL	8	GALVANISED	TUBULAR
46100621	GODNOW ROAD	Crowle Parish	476278.09	411656.04	1	7025	00188177	01/04/1993 00:00	5	1	GREATER THAN 50MPH	VERGE	300	SINGLE ARM	NOT APPLICABLE	RIGID COLUMN	URBIS	AXIA 2 S1	PETITJEAN	SHEET STEEL	5	GALVANISED	DAER
46100621	GODNOW ROAD	Crowle Parish	477151.12	412411.23	10	7011	00188163	24/08/2020 00:00	5	1	LESS THAN 30MPH	VERGE	0	POST TOP	NOT APPLICABLE	RIGID COLUMN	URBIS	AXIA 2 S1	MALLATITE	TUBULAR STEEL	6	GALVANISED	TUBULAR
46100621	GODNOW ROAD	Crowle Parish	477116.24	412395.8	11	7012	00188164	24/08/2020 00:00	5	1	LESS THAN 30MPH	VERGE	0	POST TOP	NOT APPLICABLE	RIGID COLUMN	URBIS	AXIA 2 S1	MALLATITE	TUBULAR STEEL	6	GALVANISED	TUBULAR
46100621	GODNOW ROAD	Crowle Parish	477100.81	412368.29	12	7013	00188165	24/08/2020 00:00	5	1	LESS THAN 30MPH	VERGE	0	POST TOP	NOT APPLICABLE	RIGID COLUMN	URBIS	AXIA 2 S1	MALLATITE	TUBULAR STEEL	6	GALVANISED	TUBULAR
46100621	GODNOW ROAD	Crowle Parish	477070.97	412357	13	7014	00188166	24/08/2020 00:00	5	1	LESS THAN 30MPH	VERGE	0	POST TOP	NOT APPLICABLE	RIGID COLUMN	URBIS	AXIA 2 S1	MALLATITE	TUBULAR STEEL	6	GALVANISED	TUBULAR
46100621	GODNOW ROAD	Crowle Parish	477050.24	412322.9	14	7015	00188167	24/08/2020 00:00	5	1	LESS THAN 30MPH	VERGE	0	POST TOP	NOT APPLICABLE	RIGID COLUMN	URBIS	AXIA 2 S1	MALLATITE	TUBULAR STEEL	6	GALVANISED	TUBULAR
46100621	GODNOW ROAD	Crowle Parish	477025.33	412316.92	15	7016	00188168	24/08/2020 00:00	5	1	LESS THAN 30MPH	VERGE	0	POST TOP	NOT APPLICABLE	RIGID COLUMN	URBIS	AXIA 2 S1	MALLATITE	TUBULAR STEEL	6	GALVANISED	TUBULAR
46100621	GODNOW ROAD	Crowle Parish	477005.03	412284.86	16	7017	00188169	24/08/2020 00:00	5	1	LESS THAN 30MPH	VERGE	0	POST TOP	NOT APPLICABLE	RIGID COLUMN	URBIS	AXIA 2 S1	MALLATITE	TUBULAR STEEL	6	GALVANISED	TUBULAR
46100621	GODNOW ROAD	Crowle Parish	476966.88	412267.13	17	7018	00188170	24/08/2020 00:00	5	1	LESS THAN 30MPH	VERGE	0	POST TOP	NOT APPLICABLE	RIGID COLUMN	URBIS	AXIA 2 S1	MALLATITE	TUBULAR STEEL	6	GALVANISED	TUBULAR
46100621	GODNOW ROAD	Crowle Parish	476943.07	412232.09	18	7019	00188171	24/08/2020 00:00	5	1	LESS THAN 30MPH	VERGE	0	POST TOP	NOT APPLICABLE	RIGID COLUMN	URBIS	AXIA 2 S1	MALLATITE	TUBULAR STEEL	4	GALVANISED	TUBULAR
46100621	GODNOW ROAD	Crowle Parish	476906.45	412217.56	19	7020	00188172	24/08/2020 00:00	5	1	LESS THAN 30MPH	VERGE	0	POST TOP	NOT APPLICABLE	MID HINGED	URBIS	AXIA 2 S1	MALLATITE	TUBULAR STEEL	4	GALVANISED	LEVEN
46100621	GODNOW ROAD	Crowle Parish	477359.91	412579.03	2	7004	00188156	04/06/2021 00:00	5	1	LESS THAN 30MPH	BACK OF FOOTPATH	1000	SINGLE ARM	NOT APPLICABLE	RIGID COLUMN	URBIS	AXIA 2 S1	MALLATITE	TUBULAR STEEL	8	GALVANISED	TUBULAR
46100621	GODNOW ROAD	Crowle Parish	476250.28	411631.01	2	7026	00188178	01/04/1993 00:00	5	1	GREATER THAN 50MPH	VERGE	300	SINGLE ARM	NOT APPLICABLE	RIGID COLUMN	URBIS	AXIA 2 S1	PETITJEAN	SHEET STEEL	5	GALVANISED	DAER
46100621	GODNOW ROAD	Crowle Parish	476864.96	412181.3	20	7021	00188173	24/08/2020 00:00	5	1	LESS THAN 30MPH	VERGE	0	POST TOP	NOT APPLICABLE	RIGID COLUMN	URBIS	AXIA 2 S1	MALLATITE	TUBULAR STEEL	6	GALVANISED	TUBULAR
46100621	GODNOW ROAD	Crowle Parish	476828.9	412147.39	21	7022	00188174	24/08/2020 00:00	5	1	LESS THAN 30MPH	VERGE	0	POST TOP	NOT APPLICABLE	RIGID COLUMN	URBIS	AXIA 2 S1	MALLATITE	TUBULAR STEEL	6	GALVANISED	TUBULAR
46100621	GODNOW ROAD	Crowle Parish	476800.98	412123.24	22	7023	00188175	24/08/2020 00:00	5	1	LESS THAN 30MPH	VERGE	0	POST TOP	NOT APPLICABLE	RIGID COLUMN	URBIS	AXIA 2 S1	MALLATITE	TUBULAR STEEL	6	GALVANISED	TUBULAR
46100621	GODNOW ROAD	Crowle Parish	476771.12	412095.71	23	7031	04200536	30/10/2020 00:00	5	1	BETWEEN 30-50 MPH	BACK OF FOOTPATH	0	POST TOP	NOT APPLICABLE	RIGID COLUMN	URBIS	AXIA 2 S1	MALLATITE	TUBULAR STEEL	6	GALVANISED	TUBULAR
46100621	GODNOW ROAD	Crowle Parish	477321.52	412574.46	3	7005	00188157	24/08/2020 00:00	5	1	LESS THAN 30MPH	VERGE	0	POST TOP	NOT APPLICABLE	RIGID COLUMN	URBIS	AXIA 2 S1	MALLATITE	TUBULAR STEEL	6	GALVANISED	TUBULAR
46100621	GODNOW ROAD	Crowle Parish	476222.16	411608.89	3FP	7029	00188181	01/04/1993 00:00	5	1	GREATER THAN 50MPH	VERGE	300	SINGLE ARM	NOT APPLICABLE	RIGID COLUMN	URBIS	AXIA 2 S1	PETITJEAN	SHEET STEEL	5	GALVANISED	DAER
46100621	GODNOW ROAD	Crowle Parish	477312.53	412549.31	4	7006	00188158	01/05/2024 00:00	5	1	LESS THAN 30MPH	VERGE	0	POST TOP	NOT APPLICABLE	RIGID COLUMN	URBIS	AXIA 2 S1	MALLATITE	TUBULAR STEEL	6	GALVANISED	TUBULAR
46100621	GODNOW ROAD	Crowle Parish	476169	411564.63	4	7027	00188179	01/04/1993 00:00	5	1	GREATER THAN 50MPH	VERGE	300	SINGLE ARM	NOT APPLICABLE	RIGID COLUMN	URBIS	AXIA 2 S1	PETITJEAN	SHEET STEEL	5	GALVANISED	DAER
46100621	GODNOW ROAD	Crowle Parish	477280.97	412527.08	5	7007	00188159	24/08/2020 00:00	5	1	LESS THAN 30MPH	VERGE	0	POST TOP	NOT APPLICABLE	RIGID COLUMN	URBIS	AXIA 2 S1	MALLATITE	TUBULAR STEEL	6	GALVANISED	TUBULAR
46100621	GODNOW ROAD	Crowle Parish	476150.49	411529.8	5	7028	00188180	01/04/1993 00:00	5	1	GREATER THAN 50MPH	VERGE	300	SINGLE ARM	NOT APPLICABLE	RIGID COLUMN	URBIS	AXIA 2 S1	PETITJEAN	SHEET STEEL	5	GALVANISED	DAER
46100621	GODNOW ROAD	Crowle Parish	477243.09	412507.32	6FP	7024	00188176	24/08/2020 00:00	5	1	LESS THAN 30MPH	VERGE	0	POST TOP	NOT APPLICABLE	RIGID COLUMN	URBIS	AXIA 2 S1	MALLATITE	TUBULAR STEEL	6	GALVANISED	TUBULAR
46100621	GODNOW ROAD	Crowle Parish	477221.75	412475.31	7	7008	00188160	24/08/2020 00:00	5	1	LESS THAN 30MPH	VERGE	0	POST TOP	NOT APPLICABLE	RIGID COLUMN	URBIS	AXIA 2 S1	MALLATITE	TUBULAR STEEL	6	GALVANISED	TUBULAR
46100621	GODNOW ROAD	Crowle Parish	477192.02	412462.33	8	7009	00188161	24/08/2020 00:00	5	1	LESS THAN 30MPH	VERGE	0	POST TOP	NOT APPLICABLE	RIGID COLUMN	URBIS	AXIA 2 S1	MALLATITE	TUBULAR STEEL	6	GALVANISED	TUBULAR
46100621	GODNOW ROAD	Crowle Parish	477164.86	412439.77	9	7010	00188162	24/08/2020 00:00	5	1	LESS THAN 30MPH	VERGE	0	POST TOP	NOT APPLICABLE	RIGID COLUMN	URBIS	AXIA 2 S1	MALLATITE	TUBULAR STEEL	6	GALVANISED	TUBULAR
46100622	GOLDCREST CLOSE	Scunthorpe	487755.3	412544.88	1	7000	00188182	01/04/1995 00:00	2	3	LESS THAN 30MPH	VERGE	0	POST TOP	NOT APPLICABLE	RIGID COLUMN	URBIS	AXIA 2 S1	PETITJEAN	SHEET STEEL	5	GALVANISED	NIDD
46100622	GOLDCREST CLOSE	Scunthorpe	487783.46	412546.19	2	7001	00188183	01/04/1995 00:00	2	3	LESS THAN 30MPH	VERGE	0	POST TOP	NOT APPLICABLE	RIGID COLUMN	URBIS	AXIA 2 S1	PETITJEAN	SHEET STEEL	5	GALVANISED	NIDD
46100622	GOLDCREST CLOSE	Scunthorpe	487806.03	412561.71	3	7002	00188184	01/04/1995 00:00	2	3	LESS THAN 30MPH	VERGE	0	POST TOP	NOT APPLICABLE	RIGID COLUMN	URBIS	AXIA 2 S1	PETITJEAN	SHEET STEEL	5	GALVANISED	NIDD
46100622	GOLDCREST CLOSE	Scunthorpe	487810.33	412587.04	4	7003	00188185	01/04/1995 00:00	2	3	LESS THAN 30MPH	VERGE	0	POST TOP	NOT APPLICABLE	RIGID COLUMN	URBIS	AXIA 2 S1	PETITJEAN	SHEET STEEL	5	GALVANISED	NIDD
46100622	GOLDCREST CLOSE	Scunthorpe	487805.62	412615.08	5	7004	00188186	01/04/1995 00:00	2	3	LESS THAN 30MPH	VERGE	0	POST TOP	NOT APPLICABLE	RIGID COLUMN	URBIS	AXIA 2 S1	PETITJEAN	SHEET STEEL	5	GALVANISED	NIDD
46100622	GOLDCREST CLOSE	Scunthorpe	487815.5	412638	6	7005	00188187	01/04/1995 00:00	2	3	LESS THAN 30MPH	VERGE	0	POST TOP	NOT APPLICABLE	RIGID COLUMN	URBIS	AXIA 2 S1	PETITJEAN	SHEET STEEL	5	GALVANISED	NIDD
46100622	GOLDCREST CLOSE	Scunthorpe	487820.02	412661.94	7	7006	00188188	01/04/1995 00:00	2	3	LESS THAN 30MPH	VERGE	0	POST TOP	NOT APPLICABLE	RIGID COLUMN	URBIS	AXIA 2 S1	PETITJEAN	SHEET STEEL	5	GALVANISED	NIDD
46100623	GOLLANDS LANE	Haxey Parish	475342.92	399750.25	1	7000	00188189	19/04/2018 00:00	6	2	LESS THAN 30MPH	VERGE	0	POST TOP	NOT APPLICABLE	RIGID COLUMN	URBIS	AXIA 2 S1	VALMONT ST	TUBULAR STEEL	6	GALVANISED	TUBULAR
46100623	GOLLANDS LANE	Haxey Parish	475355.76	399797.94	2	7001	00188190	10/04/2018 00:00	6	2	LESS THAN 30MPH	VERGE	0	POST TOP	NOT APPLICABLE	RIGID COLUMN	URBIS	AXIA 2 S1	VALMONT ST	TUBULAR STEEL	6	GALVANISED	TUBULAR
46100623	GOLLANDS LANE	Haxey Parish	475369.52	399838.96	3	7002	00188191	19/04/2018 00:00	6	2	LESS THAN 30MPH

46100646	GREENGATE	Epworth Parish	478593.95	403644.06	8	7007	00188354	01/04/2004 00:00	5	3	LESS THAN 30MPH	BACK OF FOOTPATH	0	POST TOP	NOT APPLICABLE	RIGID COLUMN	URBIS	AXIA 2 S1	MALLATITE	TUBULAR STEEL	5	GALVANISED	STEPPED TUBULAR
46100646	GREENGATE	Epworth Parish	478591.42	403611	9	7008	00188355	01/04/2004 00:00	5	3	LESS THAN 30MPH	BACK OF FOOTPATH	0	POST TOP	NOT APPLICABLE	RIGID COLUMN	URBIS	AXIA 2 S1	MALLATITE	TUBULAR STEEL	5	GALVANISED	STEPPED TUBULAR
46100647	GREENGATE LANE	Goxhill Parish	510100.42	421383.07	1	7000	00188357	01/04/2009 00:00	4	4	BETWEEN 30-50 MPH	BACK OF FOOTPATH	0	SINGLE ARM	NOT APPLICABLE	RIGID COLUMN	URBIS	AXIA 2 S1	MALLATITE	TUBULAR STEEL	5	GALVANISED	STEPPED TUBULAR
46100647	GREENGATE LANE	Goxhill Parish	510080.54	421402.81	2	7001	00188358	01/04/2009 00:00	4	4	BETWEEN 30-50 MPH	BACK OF FOOTPATH	0	SINGLE ARM	NOT APPLICABLE	RIGID COLUMN	URBIS	AXIA 2 S1	MALLATITE	TUBULAR STEEL	5	GALVANISED	STEPPED TUBULAR
46100647	GREENGATE LANE	Goxhill Parish	510061.92	421420.87	3	7002	00188359	01/04/2009 00:00	4	4	BETWEEN 30-50 MPH	BACK OF FOOTPATH	0	SINGLE ARM	NOT APPLICABLE	RIGID COLUMN	URBIS	AXIA 2 S1	MALLATITE	TUBULAR STEEL	5	GALVANISED	STEPPED TUBULAR
46100647	GREENGATE LANE	Goxhill Parish	510044.56	421446.65	4	7003	00188360	01/04/2009 00:00	4	4	BETWEEN 30-50 MPH	BACK OF FOOTPATH	0	SINGLE ARM	NOT APPLICABLE	RIGID COLUMN	URBIS	AXIA 2 S1	MALLATITE	TUBULAR STEEL	5	GALVANISED	STEPPED TUBULAR
46100647	GREENGATE LANE	Goxhill Parish	510024.96	421475.47	5	7004	00188361	01/04/2009 00:00	4	4	BETWEEN 30-50 MPH	BACK OF FOOTPATH	0	SINGLE ARM	NOT APPLICABLE	RIGID COLUMN	URBIS	AXIA 2 S1	MALLATITE	TUBULAR STEEL	5	GALVANISED	STEPPED TUBULAR
46100647	GREENGATE LANE	Goxhill Parish	510004.1	421494.51	6	7005	00188362	01/04/2009 00:00	4	4	BETWEEN 30-50 MPH	BACK OF FOOTPATH	0	SINGLE ARM	NOT APPLICABLE	RIGID COLUMN	URBIS	AXIA 2 S1	MALLATITE	TUBULAR STEEL	5	GALVANISED	STEPPED TUBULAR
46100647	GREENGATE LANE	Goxhill Parish	509997.37	421502.98	7	7006	00188363	01/04/2003 00:00	4	4	LESS THAN 30MPH	BACK OF FOOTPATH	0	POST TOP	NOT APPLICABLE	RIGID COLUMN	URBIS	AXIA 2 S1	OTHER	TUBULAR STEEL	5	GALVANISED	OTHER
46100648	GREENGATE LANE	South Killingholme Parish	514460	416104	1	7012	00211943	05/03/2021 00:00	3	1	LESS THAN 30MPH	BACK OF FOOTPATH	0	POST TOP	NOT APPLICABLE	RIGID COLUMN	PHILIPS	MINI LUMA 7.2 KL	MALLATITE	TUBULAR STEEL	6	GALVANISED	TUBULAR
46100648	GREENGATE LANE	South Killingholme Parish	514583.31	416183.13	1	7000	00188364	01/04/1973 00:00	3	1	LESS THAN 30MPH	FRONT OF FOOTPATH	1500	SINGLE ARM	LIGHT GREY	RIGID COLUMN	URBIS	AXIA 2 S1	PETITJEAN	SHEET STEEL	6	PAINTED	NIDD
46100648	GREENGATE LANE	South Killingholme Parish	514887.75	416332.97	10	7009	00188373	01/04/1973 00:00	3	1	LESS THAN 30MPH	FRONT OF FOOTPATH	1500	SINGLE ARM	LIGHT GREY	RIGID COLUMN	URBIS	AXIA 2 S1	PETITJEAN	SHEET STEEL	6	PAINTED	NIDD
46100648	GREENGATE LANE	South Killingholme Parish	514925.96	416336.31	11	7010	00188374	01/04/1973 00:00	3	1	LESS THAN 30MPH	FRONT OF FOOTPATH	1500	SINGLE ARM	LIGHT GREY	RIGID COLUMN	URBIS	AXIA 2 S1	PETITJEAN	SHEET STEEL	6	PAINTED	NIDD
46100648	GREENGATE LANE	South Killingholme Parish	514961.2	416344.9	12	7011	00188375	01/04/1973 00:00	3	1	LESS THAN 30MPH	FRONT OF FOOTPATH	1500	SINGLE ARM	LIGHT GREY	RIGID COLUMN	URBIS	AXIA 2 S1	PETITJEAN	SHEET STEEL	6	PAINTED	NIDD
46100648	GREENGATE LANE	South Killingholme Parish	514996	416359	13	7015	04200371	01/04/1973 00:00	3	1	LESS THAN 30MPH	FRONT OF FOOTPATH	1500	SINGLE ARM	LIGHT GREY	RIGID COLUMN	URBIS	AXIA 2 S1	PETITJEAN	SHEET STEEL	6	PAINTED	NIDD
46100648	GREENGATE LANE	South Killingholme Parish	514500	416125	2	7013	00211944	01/04/2017 00:00	3	1	LESS THAN 30MPH	VERGE	0	POST TOP	NOT APPLICABLE	RIGID COLUMN	PHILIPS	MINI LUMA 7.2 KL	VALMONT ST	TUBULAR STEEL	6	GALVANISED	TUBULAR
46100648	GREENGATE LANE	South Killingholme Parish	514624.83	416195.8	2	7001	00188365	01/04/1973 00:00	3	1	LESS THAN 30MPH	FRONT OF FOOTPATH	1500	SINGLE ARM	LIGHT GREY	RIGID COLUMN	URBIS	AXIA 2 S1	PETITJEAN	SHEET STEEL	6	PAINTED	NIDD
46100648	GREENGATE LANE	South Killingholme Parish	514537	416146	3	7014	00211945	01/04/2017 00:00	3	1	LESS THAN 30MPH	VERGE	0	POST TOP	NOT APPLICABLE	RIGID COLUMN	PHILIPS	MINI LUMA 7.2 KL	VALMONT ST	TUBULAR STEEL	6	GALVANISED	TUBULAR
46100648	GREENGATE LANE	South Killingholme Parish	514652.25	416216.01	3	7002	00188366	01/04/1973 00:00	3	1	LESS THAN 30MPH	FRONT OF FOOTPATH	1500	SINGLE ARM	LIGHT GREY	RIGID COLUMN	URBIS	AXIA 2 S1	PETITJEAN	SHEET STEEL	6	PAINTED	NIDD
46100648	GREENGATE LANE	South Killingholme Parish	514695.74	416228.34	4	7003	00188367	01/04/1973 00:00	3	1	LESS THAN 30MPH	FRONT OF FOOTPATH	1500	SINGLE ARM	LIGHT GREY	RIGID COLUMN	URBIS	AXIA 2 S1	PETITJEAN	SHEET STEEL	6	PAINTED	NIDD
46100648	GREENGATE LANE	South Killingholme Parish	514724.33	416252.3	5	7004	00188368	01/04/1973 00:00	3	1	LESS THAN 30MPH	FRONT OF FOOTPATH	1500	SINGLE ARM	LIGHT GREY	RIGID COLUMN	URBIS	AXIA 2 S1	PETITJEAN	SHEET STEEL	6	PAINTED	NIDD
46100648	GREENGATE LANE	South Killingholme Parish	514760.64	416260.7	6	7005	00188369	01/04/1984 00:00	3	1	LESS THAN 30MPH	FRONT OF FOOTPATH	1500	SINGLE ARM	LIGHT GREY	RIGID COLUMN	URBIS	AXIA 2 S1	PETITJEAN	SHEET STEEL	6	PAINTED	NIDD
46100648	GREENGATE LANE	South Killingholme Parish	514785.64	416292.96	7	7006	00188370	01/04/1984 00:00	3	1	LESS THAN 30MPH	FRONT OF FOOTPATH	1500	SINGLE ARM	LIGHT GREY	RIGID COLUMN	URBIS	AXIA 2 S1	PETITJEAN	SHEET STEEL	6	PAINTED	NIDD
46100648	GREENGATE LANE	South Killingholme Parish	514820.26	416322.54	8	7007	00188371	01/04/1973 00:00	3	1	LESS THAN 30MPH	FRONT OF FOOTPATH	1500	SINGLE ARM	LIGHT GREY	RIGID COLUMN	URBIS	AXIA 2 S1	PETITJEAN	SHEET STEEL	6	PAINTED	NIDD
46100648	GREENGATE LANE	South Killingholme Parish	514846.57	416335.41	9	7008	00188372	01/04/1973 00:00	3	1	LESS THAN 30MPH	FRONT OF FOOTPATH	1500	SINGLE ARM	LIGHT GREY	RIGID COLUMN	URBIS	AXIA 2 S1	PETITJEAN	SHEET STEEL	6	PAINTED	NIDD
46100649	GREENHILL	Broughton Parish	495675.99	408610.71	1	7000	00188376	01/04/2010 00:00	1	1	LESS THAN 30MPH	BACK OF FOOTPATH	0	POST TOP	NOT APPLICABLE	RIGID COLUMN	URBIS	AXIA 2 S1	MALLATITE	TUBULAR STEEL	6	GALVANISED	TUBULAR
46100649	GREENHILL	Broughton Parish	495667.37	408586.89	2	7001	00188377	01/04/1985 00:00	1	1	LESS THAN 30MPH	VERGE	300	SINGLE ARM	NOT APPLICABLE	RIGID COLUMN	URBIS	AXIA 2 S1	PETITJEAN	SHEET STEEL	5	GALVANISED	DAER
46100649	GREENHILL	Broughton Parish	495656.52	408558.12	3	7002	00188378	01/04/2010 00:00	1	1	LESS THAN 30MPH	BACK OF FOOTPATH	0	POST TOP	NOT APPLICABLE	RIGID COLUMN	URBIS	AXIA 2 S1	MALLATITE	TUBULAR STEEL	6	GALVANISED	TUBULAR
46100650	GREENHOE ROAD	Bottesford Parish	487559.63	407450.77	1	7000	00188379	01/04/1980 00:00	3	1	LESS THAN 30MPH	BACK OF FOOTPATH	1000	SINGLE ARM	MID GREY	RIGID COLUMN	URBIS	AXIA 2 S1	PETITJEAN	SHEET STEEL	8	PAINTED	THAMES
46100650	GREENHOE ROAD	Bottesford Parish	487554.52	407497.28	2	7001	00188380	01/04/1980 00:00	3	1	LESS THAN 30MPH	BACK OF FOOTPATH	1000	SINGLE ARM	MID GREY	RIGID COLUMN	URBIS	AXIA 2 S1	PETITJEAN	SHEET STEEL	8	PAINTED	THAMES
46100651	GREENWAY	Barton upon Humber Parish	503586.47	422297.07	1	7000	00188381	26/07/2019 00:00	5	2	LESS THAN 30MPH	FRONT OF FOOTPATH	0	POST TOP	NOT APPLICABLE	RIGID COLUMN	URBIS	AXIA 2 S1	MALLATITE	TUBULAR STEEL	6	GALVANISED	TUBULAR
46100651	GREENWAY	Barton upon Humber Parish	503616.92	422305.71	2	7001	00188382	01/10/2012 00:00	5	2	LESS THAN 30MPH	FRONT OF FOOTPATH	0	POST TOP	NOT APPLICABLE	RIGID COLUMN	URBIS	AXIA 2 S1	MALLATITE	TUBULAR STEEL	6	GALVANISED	TUBULAR
46100651	GREENWAY	Barton upon Humber Parish	503648.38	422300.01	3	7002	00188383	26/07/2019 00:00	5	2	LESS THAN 30MPH	FRONT OF FOOTPATH	0	POST TOP	NOT APPLICABLE	RIGID COLUMN	URBIS	AXIA 2 S1	MALLATITE	TUBULAR STEEL	6	GALVANISED	TUBULAR
46100651	GREENWAY	Barton upon Humber Parish	503679.17	422309.07	4	7003	00188384	26/07/2019 00:00	5	2	LESS THAN 30MPH	FRONT OF FOOTPATH	0	POST TOP	NOT APPLICABLE	RIGID COLUMN	URBIS	AXIA 2 S1	MALLATITE	TUBULAR STEEL	6	GALVANISED	TUBULAR
46100651	GREENWAY	Barton upon Humber Parish	503711.71	422303.45	5	7004	00188385	26/07/2019 00:00	5	2	LESS THAN 30MPH	FRONT OF FOOTPATH	0	POST TOP	NOT APPLICABLE	RIGID COLUMN	URBIS	AXIA 2 S1	MALLATITE	TUBULAR STEEL	6	GALVANISED	TUBULAR
46100652	GREYFRIARS ROAD	Broughton Parish	496706.99	408697.42	1	7000	00188386	02/04/2019 00:00	1	1	LESS THAN 30MPH	BACK OF FOOTPATH	0	POST TOP	NOT APPLICABLE	RIGID COLUMN	URBIS	AXIA 2 S1	MALLATITE	TUBULAR STEEL	6	GALVANISED	TUBULAR
46100652	GREYFRIARS ROAD	Broughton Parish	496694.43	408723.57	2	7001	00188387	01/04/2008 00:00	1	1	LESS THAN 30MPH	FRONT OF FOOTPATH	0	POST TOP	NOT APPLICABLE	RIGID COLUMN	URBIS	AXIA 2 S1	BRITISH STEI	TUBULAR STEEL	6	GALVANISED	ASH
46100652	GREYFRIARS ROAD	Broughton Parish	496693.12	408750.29	3	7002	00188388	02/04/2019 00:00	1	1	LESS THAN 30MPH	FRONT OF FOOTPATH	0	POST TOP	NOT APPLICABLE	RIGID COLUMN	URBIS	AXIA 2 S1	MALLATITE	TUBULAR STEEL	6	GALVANISED	TUBULAR
46100652	GREYFRIARS ROAD	Broughton Parish	496673.16	408773.18	4	7003	00188389	01/04/2008 00:00	1	1	LESS THAN 30MPH	FRONT OF FOOTPATH	0	POST TOP	NOT APPLICABLE	RIGID COLUMN	URBIS	AXIA 2 S1	BRITISH STEI	TUBULAR STEEL	6	GALVANISED	ASH
46100652	GREYFRIARS ROAD	Broughton Parish	496671.72	408799.81	5	7004	00188390	01/03/2019 00:00	1	1	LESS THAN 30MPH	FRONT OF FOOTPATH	0	POST TOP	NOT APPLICABLE	RIGID COLUMN	URBIS	AXIA 2 S1	MALLATITE	TUBULAR STEEL	6	GALVANISED	TUBULAR
46100652	GREYFRIARS ROAD	Broughton Parish	496669.08	408827.88	6	7005	00188391	01/03/2019 00:00	1	1	LESS THAN 30MPH	FRONT OF FOOTPATH	0	POST TOP	NOT APPLICABLE	RIGID COLUMN	URBIS	AXIA 2 S1	MALLATITE	TUBULAR STEEL	6	GALVANISED	TUBULAR
46100652	GREYFRIARS ROAD	Broughton Parish	496671.24	408856.91	7	7006	00188392	02/04/2019 00:00	1	1	LESS THAN 30MPH	BACK OF FOOTPATH	0	POST TOP	NOT APPLICABLE	RIGID COLUMN	URBIS	AXIA 2 S1	MALLATITE	TUBULAR STEEL	6	GALVANISED	TUBULAR
46100652	GREYFRIARS ROAD	Broughton Parish	496664.04	408894.1	8	7007	00188393	01/04/1994 00:00	1	1	LESS THAN 30MPH	FRONT OF FOOTPATH	0	POST TOP	NOT APPLICABLE	RIGID COLUMN	URBIS	AXIA 2 S1	PETITJEAN	SHEET STEEL	5	GALVANISED	NIDD
46100653	GROSVENOR STREET SOUTH	Scunthorpe	489376.55	411695.98	1	7000	00188394	01/04/1993 00:00	4	4	LESS THAN 30MPH	BACK OF FOOTPATH	800	SINGLE ARM	NOT APPLICABLE	RIGID COLUMN	URBIS	AXIA 2 S1	PETITJEAN	SHEET STEEL	6	GALVANISED	DAER
46100653	GROSVENOR STREET SOUTH	Scunthorpe	489371.17	411724.47	2	7001	00188395	01/04/1993 00:00	4	4	LESS THAN 30MPH	BACK OF FOOTPATH	800	SINGLE ARM	NOT APPLICABLE	RIGID COLUMN	URBIS	AXIA 2 S1	PETITJEAN	SHEET STEEL	6	GALVANISED	DAER
46100653	GROSVENOR STREET SOUTH	Scunthorpe	489355.31	411752.16	3	7002	00188396	01/04/1993 00:00	4	4	LESS THAN 30MPH	BACK OF FOOTPATH	800	SINGLE ARM	NOT APPLICABLE	RIGID COLUMN	URBIS	AXIA 2 S1	PETITJEAN	SHEET STEEL	6	GALVANISED	DAER
46100653	GROSVENOR STREET SOUTH	Scunthorpe	489362.03	411774.74	4	7003	00188397	01/04/1993 00:00	4	4	LESS THAN 30MPH	BACK OF FOOTPATH	800	SINGLE ARM	NOT APPLICABLE	RIGID COLUMN	URBIS	AXIA 2 S1	PETITJEAN	SHEET STEEL	6	GALVANISED	DAER
46100653	GROSVENOR STREET SOUTH	Scunthorpe	489357.19	411804.58	5	7004	00188398	01/04/1993 00:00	4	4	LESS THAN 30MPH	BACK OF FOOTPATH	800	SINGLE ARM	NOT APPLICABLE	RIGID COLUMN	URBIS	AXIA 2 S1	PETITJEAN	SHEET STEEL	6	GALVANISED	DAER
46100654	GROSVENOR STREET NORTH	Scunthorpe	489311.65	411925.98	10	7004	00188403	01/04/1993 00:00	4	4	LESS THAN 30MPH	BACK OF FOOTPATH	800	SINGLE ARM	NOT APPLICABLE	RIGID COLUMN	URBIS	AXIA 2 S1	PETITJEAN	SHEET STEEL	6	GALVANISED	DAER
46100654	GROSVENOR STREET NORTH	Scunthorpe	489313.63	411956.37	11	7005	00188404	01/04/1993 00:00	4	4	LESS THAN 30MPH	BACK OF FOOTPATH	800	SINGLE ARM	NOT APPLICABLE	RIGID COLUMN	URBIS	AXIA 2 S1	PETITJEAN	SHEET STEEL	6	GALVANISED	DAER
46100654	GROSVENOR STREET NORTH	Scunthorpe	489310.36	411975.03	12	7006	00188405	01/04/1993 00:00	4	4	LESS THAN 30MPH	BACK OF FOOTPATH	800	SINGLE ARM	NOT APPLICABLE	RIGID COLUMN	URBIS	AXIA 2 S1	PETITJEAN	SHEET STEEL	6	GALVANISED	DAER
46100654	GROSVENOR STREET NORTH	Scunthorpe	489294.95	411999.42	13	7007	00188406	01/04/1993 00:00	4	4	LESS THAN 30MPH	BACK OF FOOTPATH	800	SINGLE ARM	NOT APPLICABLE	RIGID COLUMN	URBIS	AXIA 2 S1	PETITJEAN	SHEET STEEL	6	GALVANISED	DAER
46100654	GROSVENOR STREET NORTH	Scunthorpe	489292.13	412017.36	14	7008	00188407	01/04/1993 00:00	4	4	LESS THAN 30MPH	BACK OF FOOTPATH	800	SINGLE ARM	NOT APPLICABLE	RIGID COLUMN	URBIS	AXIA 2 S1	PETITJEAN	SHEET STEEL	6	GALVANISED	DAER
46100654	GROSVENOR STREET NORTH	Scunthorpe	489288.29	412039.15	15	7009	00188408	01/04/1993 00:00	4	4	LESS THAN 30MPH	BACK OF FOOTPATH	800	SINGLE ARM	NOT APPLICABLE	RIGID COLUMN	URBIS	AXIA 2 S1	PETITJEAN	SHEET STEEL	6	GALVANISED	DAER
46100654	GROSVENOR STREET NORTH	Scunthorpe	489291.59	412067.55	16	7010	00188409	01/04/1993 00:00	4	4	LESS THAN 30MPH	BACK OF FOOTPATH	800	SINGLE ARM	NOT APPLICABLE	RIGID COLUMN	URBIS	AXIA 2 S1	PETITJEAN	SHEET STEEL	6	GALVANISED	DAER
46100654	GROSVENOR STREET NORTH	Scunthorpe	489277.49	412081.4	17	7011	00188410	01/04/1993 00:00	4	4	LESS THAN 30MPH	BACK OF FOOTPATH	800	SINGLE ARM	NOT APPLICABLE	RIGID COLUMN	URBIS	AXIA 2 S1	PETITJEAN	SHEET STEEL	6	GALVANISED	DAER
46100654	GROSVENOR STREET NORTH	Scunthorpe	489284.37	412105.07	18	7012	00188411	01/04/1993 00:00	4	4	LESS THAN 30MPH	BACK OF FOOTPATH	800	SINGLE ARM	NOT APPLICABLE	RIGID COLUMN	URBIS	AXIA 2 S1	PETITJEAN	SHEET STEEL	6	GALVANISED	DAER
46100654	GROSVENOR STREET NORTH	Scunthorpe	489270.12	412128.48	19	7013	00188412	01/04/1993 00:00	4	4	LESS THAN 30MPH	BACK OF FOOTPATH	800	SINGLE ARM	NOT APPLICABLE	RIGID COLUMN	URBIS	AXIA 2 S1	PETITJEAN	SHEET STEEL	6	GALVANISED	DAER
46100654	GROSVENOR STREET NORTH	Scunthorpe	489279.12	412151.89	20FP	7014	00188413	01/04/1993 00:00	4	4	LESS THAN 30MPH	BACK OF FOOTPATH	800	SINGLE ARM	NOT APPLICABLE	RIGID COLUMN	URBIS	AXIA 2 S1	PETITJEAN	SHEET STEEL	6	GALVANISED	DAER
46100654	GROSVENOR STREET NORTH	Scunthorpe	489340.7	411833.3	6	7000	00188399	01/04/2016 00:00	4	4	LESS THAN 30MPH	BACK OF FOOTPATH	0	POST TOP	NOT APPLICABLE	RIGID COLUMN	URBIS	AXIA 2 S1	VALMONT ST	TUBULAR STEEL	6	GALVANISED	TUBULAR
46100654	GROSVENOR STREET NORTH	Scunthorpe	489336.58	411852.36	7	7001	00188400	26/03/2020 00:00	4	4	LESS THAN 30MPH	BACK OF FOOTPATH	0	POST TOP	NOT APPLICABLE	RIGID COLUMN	URBIS	AXIA 2 S1	MALLATITE	TUBULAR STEEL	6	GALVANISED	TUBULAR
46100654	GROSVENOR STREET NORTH	Scunthorpe	489327.95	411878.24	8	7002	00188401	01/04/1993 00:00	4	4	LESS THAN 30MPH	BACK OF FOOTPATH	800	SINGLE ARM	NOT APPLICABLE	RIGID COLUMN	URBIS	AXIA 2 S1	PETITJEAN	SHEET STEEL	6	GALVANISED	DAER
46100654	GROSVENOR STREET NORTH	Scunthorpe	489330.06	411906.25	9	7003	00188402	01/04/1993 00:00	4	4	LESS THAN 30MPH	BACK OF FOOTPATH	800	SINGLE ARM	NOT APPLICABLE	RIGID COLUMN	URBIS	AXIA 2 S1	PETITJEAN	SHEET STEEL	6	GALVANISED	DAER
46100655	GROVE STREET	Kirton in Lindsey Parish	493321.62	398581.9	1	7000	00188414	01/04/1980 00:00	1	3	LESS THAN 30MPH	BACK OF FOOTPATH	0	POST TOP	LIGHT GREY	RIGID COLUMN	URBIS	AXIA 2 S1	PETITJEAN	SHEET STEEL	5	PAINTED	NIDD
46100655	GROVE STREET	Kirton in Lindsey Parish	493303.99	398614.92	2	7001	00188415	29/01/2019 00:00	1	3	LESS THAN 30MPH	BACK OF FOOTPATH	0	POST TOP	NOT APPLICABLE	RIGID COLUMN	URBIS	AXIA 2 S1	MALLATITE	TUBULAR STEEL	6	GALVANISED	TUBULAR
46100655	GROVE STREET	Kirton in Lindsey Parish	493275.56	398633.32	3	7002	00188416	01/04/1980 00:00	1	3	LESS THAN 30MPH	BACK OF FOOTPATH	0	POST TOP	LIGHT GREY	RIGID COLUMN	URBIS	AXIA 2 S1	PETITJEAN	SHEET STEEL	5	PAINTED	NIDD
46100655	GROVE STREET	Kirton in Lindsey Parish	493267.6	398655.29	4	7003	00188417	01/04/2010 00:00	1	3	LESS THAN 30MPH	BACK OF FOOTPATH	0	POST TOP	NOT APPLICABLE	RIGID COLUMN	URBIS	AXIA 2 S1	MALLATITE	TUBULAR STEEL	6	GALVANISED	TUBULAR
46100655	GROVE STREET	Kirton in Lindsey Parish	493267.48	398691.72	5	7004	00188418	01/04/1980 00:00	1	3	LESS THAN 30MPH	VERGE	0	POST TOP	LIGHT GREY	RIGID COLUMN	URBIS	AXIA 2 S1	PETITJEAN	SHEET STEEL	5	PAINTED	NIDD
46100655	GROVE STREET	Kirton in Lindsey Parish	493256.41	398727.23	6	7005	00188419	29/01/2019 00:00	1	3	LESS THAN 30MPH	BACK OF FOOTPATH	0	POST TOP	NOT APPLICABLE	RIGID COLUMN	URBIS	AXIA 2 S1	MALLATITE	TUBULAR STEEL	6	GALVANISED	TUBULAR
46100655	GROVE STREET	Kirton in Lindsey Parish	493258.59	398757.36	7	7006	00188420	01/04/1980 00:00	1	3	LESS THAN 30MPH	BACK OF FOOTPATH	0	POST TOP	LIGHT GREY	RIGID COLUMN	URBIS	AXIA 2 S1	PETITJEAN	SHEET STEEL	5	PAINTED	NIDD
46100655	GROVE STREET	Kirton in Lindsey Parish	493252.62	398800.75	8	7007	00188421	01/04/1980 00:00	1	3	LESS THAN 30MPH	VERGE	0	POST TOP	LIGHT GREY	RIGID COLUMN	URBIS	AXIA 2 S1	PETITJEAN	SHEET STEEL	5	PAINTED	NIDD
46100656	GUISEFIELD ROAD	Epworth Parish	477829.09	403869.54	1	7000	00188422	30/05/2018 00:00	5	3	LESS THAN 30MPH	FRONT OF FOOTPATH	0	POST TOP	NOT APPLICABLE	RIGID COLUMN	URBIS	AXIA 2 S1	VALMONT ST	TUBULAR STEEL	6	GALVANISED	TUBULAR
46100657	GUNBY ROAD	Scunthorpe	488037	408271.44	1	7000	00188423	01/04/1985 00:00	3	4	LESS THAN 30MPH	BACK OF FOOTPATH	500	SINGLE ARM	NOT APPLICABLE	RIGID COLUMN	URBIS	AXIA 2 S1	PETITJEAN	SHEET STEEL	5	GALVANISED	DAER
46100657	GUNBY ROAD	Scunthorpe	488039.21	408244.2	2	7001	00188424	01/04/1980 00:00	3	4	LESS THAN 30MPH	BACK OF FOOTPATH	500	SINGLE ARM	NOT APPLICABLE	RIGID COLUMN	URBIS	AXIA 2 S1	PETITJEAN	SHEET STEEL	5	GALVANISED	DAER
46100657	GUNBY ROAD	Scunthorpe	488056.55	408221.25	3	7002	00188425	01/04/1980 00:00	3	4	LESS THAN 30MPH	BACK OF FOOTPATH	500	SINGLE ARM	NOT APPLICABLE	RIGID COLUMN	URBIS	AXIA 2 S1	PETITJEAN	SHEET STEEL	5	GALVANISED	DAER
46100657	GUNBY ROAD	Scunthorpe	488061.71	408194.75	4	7003	00188426	01/04/1980 00:00	3	4	LESS THAN 30MPH	BACK OF FOOTPATH	500	SINGLE ARM	NOT APPLICABLE	RIGID COLUMN	URBIS	AXIA 2 S1	PETITJEAN	SHEET STEEL	5	GALVANISED	DAER
46100658	GUNTHORPE ROAD	Owston Ferry Parish	480681.13	397237.21	1	7000	00188427	01/04/1995 00:00	6	2	LESS THAN 30MPH	VERGE	0	POST TOP	NOT APPLICABLE	RIGID COLUMN	URBIS	AXIA 2 S1	PETITJEAN	SHEET STEEL	5	GALVANISED	NIDD
46100658	GUNTHORPE ROAD	Owston Ferry Parish	480646.45	397240.44	2	7001	00188428	01/04/1995 00:00	6	2	LESS THAN 30MPH	VERGE	0	POST TOP	NOT APPLICABLE	RIGID COLUMN	URBIS	AXIA 2 S1	PETITJEAN	SHEET STEEL	5	GALVANISED	NIDD
46100658	GUNTHORPE ROAD	Owston Ferry Parish	480607.74	397246.08	3	7002	00188429	01/04/1995 00:00	6	2	LESS THAN 30MPH	VERGE	0	POST TOP	NOT APPLICABLE	RIGID COLUMN	URBIS	AXIA 2 S1	PETITJEAN	SHEET STEEL	5	GALVANISED	NIDD
46100659	GURNELL STREET	Scunthorpe	489487.3	411526.14	1	7000	00188430	22/05/2020 00:00	4	4	LESS THAN 30MPH	BACK OF FOOTPATH	0	POST TOP	NOT APPLICABLE	RIGID COLUMN	URBIS	AXIA 2 S1	MALLATITE	TUBULAR STEEL	6	GALVANISED	TUBULAR
46100659	GURNELL STREET	Scunthorpe	489479.19	411558.64	2	7001	00188431	22/05/2020 00:00	4	4	LESS THAN 30MPH	BACK OF FOOTPATH	0	POST TOP	NOT APPLICABLE	RIGID COLUMN	URBIS	AXIA 2 S1	MALLATITE	TUBULAR STEEL	6	GALVANISED	TUBULAR
46100659	GURNELL STREET	Scunthorpe	489486.13	411599.87	5	7002	00188432	01/04/1993 00:00	4	4	LESS THAN 30MPH	BACK OF FOOTPATH	300	SINGLE ARM	NOT APPLICABLE	RIGID COLUMN	URBIS	AXIA 2 S1	PETITJEAN	SHEET STEEL	6	GALVANISED	DAER
46100659	GURNELL STREET	Scunthorpe	489510.65	411616.01	6	7003	00188433	01/04/1993 00:00	4	4	LESS THAN 30MPH	BACK OF FOOTPATH	300	SINGLE ARM	NOT APPLICABLE	RIGID COLUMN	URBIS	AXIA 2 S1	PETITJEAN	SHEET STEEL	6	GALVANISED	DAER
46100659	GURNELL STREET	Scunthorpe	489544.07	411617.15	7	7004	00188434	01/04/1993 00:00	4	4	LESS THAN 30MPH	BACK OF FOOTPATH	300	SINGLE ARM	NOT APPLICABLE	RIGID COLUMN	URBIS	AXIA 2 S1	PETITJEAN	SHEET STEEL	6	GALVANISED	DAER
46100659	GURNELL STREET	Scunthorpe	489575.79	411630.59	8	7005	00188435	01/04/1993 00:00	4	4	LESS THAN 30MPH	BACK OF FOOTPATH	300	SINGLE ARM	NOT APPLICABLE	RIGID COLUMN	URBIS	AXIA 2 S1	PETITJEAN	SHEET STEEL	6	GALVANISED	DAER
46100662	HALES CLOSE	Bottesford Parish	489169.83	406665.2	1	7000	00188451	01/04/1986 00:00	3	1	LESS THAN 30MPH	BACK OF FOOTPATH	0	POST TOP	NOT APPLICABLE	RIGID COLUMN	URBIS	AXIA 2

46100690	HENDERSON WAY	Winterton Parish	492468.21	418151.62	3	7001	00188614	01/04/2013 00:00	1	1	LESS THAN 30MPH	VERGE	0	POST TOP	NOT APPLICABLE	RIGID COLUMN	URBIS	AXIA 2 S1	MALLATITE	TUBULAR STEEL	6	GALVANISED	TUBULAR
46100690	HENDERSON WAY	Winterton Parish	492490.73	418168.17	4	7002	00188615	01/04/1980 00:00	1	1	LESS THAN 30MPH	VERGE	0	POST TOP	MID GREY	RIGID COLUMN	URBIS	AXIA 2 S1	PETITJEAN	SHEET STEEL	5	PAINTED	NIDD
46100690	HENDERSON WAY	Winterton Parish	492521.35	418170.52	5	7003	00188616	01/04/1989 00:00	1	1	LESS THAN 30MPH	VERGE	0	POST TOP	NOT APPLICABLE	RIGID COLUMN	URBIS	AXIA 2 S1	PETITJEAN	SHEET STEEL	5	GALVANISED	NIDD
46100690	HENDERSON WAY	Winterton Parish	492551.19	418178.55	6	7004	00188617	01/03/2019 00:00	1	1	LESS THAN 30MPH	VERGE	0	POST TOP	NOT APPLICABLE	RIGID COLUMN	URBIS	AXIA 2 S1	MALLATITE	TUBULAR STEEL	6	GALVANISED	TUBULAR
46100690	HENDERSON WAY	Winterton Parish	492582.59	418183.52	7	7005	00188618	01/04/1993 00:00	1	1	LESS THAN 30MPH	BACK OF FOOTPATH	300	SINGLE ARM	NOT APPLICABLE	RIGID COLUMN	URBIS	AXIA 2 S1	PETITJEAN	SHEET STEEL	5	GALVANISED	DAER
46100690	HENDERSON WAY	Winterton Parish	492610.69	418194.81	8	7006	00188619	01/04/1993 00:00	1	1	LESS THAN 30MPH	BACK OF FOOTPATH	300	SINGLE ARM	NOT APPLICABLE	RIGID COLUMN	URBIS	AXIA 2 S1	PETITJEAN	SHEET STEEL	5	GALVANISED	DAER
46100690	HENDERSON WAY	Winterton Parish	492636.52	418194.33	9	7007	00188620	01/04/1993 00:00	1	1	LESS THAN 30MPH	VERGE	300	SINGLE ARM	NOT APPLICABLE	RIGID COLUMN	URBIS	AXIA 2 S1	PETITJEAN	SHEET STEEL	5	GALVANISED	DAER
46100692	HENRY STREET	Scunthorpe	488955.6	411287.8	1	7006	00188632	01/04/2006 00:00	6	3	LESS THAN 30MPH	BACK OF FOOTPATH	0	POST TOP	NOT APPLICABLE	RIGID COLUMN	URBIS	AXIA 2 S1	MALLATITE	TUBULAR STEEL	6	GALVANISED	TUBULAR
46100692	HENRY STREET	Scunthorpe	488950.1	411258.5	2	7007	00188633	01/04/2006 00:00	6	3	LESS THAN 30MPH	BACK OF FOOTPATH	0	POST TOP	NOT APPLICABLE	RIGID COLUMN	URBIS	AXIA 2 S1	MALLATITE	TUBULAR STEEL	6	GALVANISED	TUBULAR
46100692	HENRY STREET	Scunthorpe	488961.9	411238	3	7008	00188634	01/04/2006 00:00	6	3	LESS THAN 30MPH	BACK OF FOOTPATH	0	POST TOP	NOT APPLICABLE	RIGID COLUMN	URBIS	AXIA 2 S1	MALLATITE	TUBULAR STEEL	6	GALVANISED	TUBULAR
46100692	HENRY STREET	Scunthorpe	488953.7	411209.3	4	7002	00188628	01/04/2006 00:00	6	3	LESS THAN 30MPH	BACK OF FOOTPATH	0	POST TOP	NOT APPLICABLE	RIGID COLUMN	URBIS	AXIA 2 S1	MALLATITE	TUBULAR STEEL	6	GALVANISED	TUBULAR
46100692	HENRY STREET	Scunthorpe	488955.6	411184.4	5	7003	00188629	01/04/2006 00:00	6	3	LESS THAN 30MPH	BACK OF FOOTPATH	0	POST TOP	NOT APPLICABLE	RIGID COLUMN	URBIS	AXIA 2 S1	MALLATITE	TUBULAR STEEL	6	GALVANISED	TUBULAR
46100692	HENRY STREET	Scunthorpe	488968.2	411159.2	6	7004	00188630	01/04/2006 00:00	6	3	LESS THAN 30MPH	BACK OF FOOTPATH	0	POST TOP	NOT APPLICABLE	RIGID COLUMN	URBIS	AXIA 2 S1	MALLATITE	TUBULAR STEEL	6	GALVANISED	TUBULAR
46100692	HENRY STREET	Scunthorpe	488959.7	411134.4	7	7005	00188631	01/04/2006 00:00	6	3	LESS THAN 30MPH	BACK OF FOOTPATH	0	POST TOP	NOT APPLICABLE	RIGID COLUMN	URBIS	AXIA 2 S1	MALLATITE	TUBULAR STEEL	6	GALVANISED	TUBULAR
46100692	HENRY STREET	Scunthorpe	488973	411107.9	8	7001	00188627	01/04/2006 00:00	6	3	LESS THAN 30MPH	BACK OF FOOTPATH	0	POST TOP	NOT APPLICABLE	RIGID COLUMN	URBIS	AXIA 2 S1	MALLATITE	TUBULAR STEEL	6	GALVANISED	TUBULAR
46100692	HENRY STREET	Scunthorpe	488964.9	411082.5	9	7000	00188626	01/04/2006 00:00	6	3	BETWEEN 30-50 MPH	BACK OF FOOTPATH	0	POST TOP	NOT APPLICABLE	RIGID COLUMN	URBIS	AXIA 2 S1	MALLATITE	TUBULAR STEEL	6	GALVANISED	STEPPED TUBULAR
46100693	HERON CLOSE	Flixborough Parish	487284.98	412625.48	1	7000	00188635	01/04/1989 00:00	2	1	LESS THAN 30MPH	BACK OF FOOTPATH	0	POST TOP	NOT APPLICABLE	RIGID COLUMN	PHILIPS	STELA LONG 18 LED	PETITJEAN	SHEET STEEL	5	GALVANISED	NIDD
46100693	HERON CLOSE	Flixborough Parish	487301.65	412621.18	2	7001	00188636	01/04/1989 00:00	2	1	LESS THAN 30MPH	BACK OF FOOTPATH	0	POST TOP	NOT APPLICABLE	RIGID COLUMN	PHILIPS	STELA LONG 18 LED	PETITJEAN	SHEET STEEL	5	GALVANISED	NIDD
46100693	HERON CLOSE	Flixborough Parish	487322.34	412638.12	3	7002	00188637	01/04/1989 00:00	2	1	LESS THAN 30MPH	BACK OF FOOTPATH	0	POST TOP	NOT APPLICABLE	RIGID COLUMN	PHILIPS	STELA LONG 18 LED	PETITJEAN	SHEET STEEL	5	GALVANISED	NIDD
46100694	HERRICK ROAD	Scunthorpe	487981.02	409457.27	1	7000	00188638	25/09/2020 00:00	5	2	LESS THAN 30MPH	VERGE	0	POST TOP	NOT APPLICABLE	RIGID COLUMN	URBIS	AXIA 2 S1	MALLATITE	TUBULAR STEEL	6	GALVANISED	TUBULAR
46100694	HERRICK ROAD	Scunthorpe	487966.69	409173.27	10	7009	00188647	01/04/2005 00:00	5	2	LESS THAN 30MPH	BACK OF FOOTPATH	0	POST TOP	NOT APPLICABLE	RIGID COLUMN	URBIS	AXIA 2 S1	T AND L	TUBULAR STEEL	5	GALVANISED	STEPPED TUBULAR
46100694	HERRICK ROAD	Scunthorpe	487963.18	409140.54	11	7010	00188648	13/05/2020 00:00	5	2	LESS THAN 30MPH	BACK OF FOOTPATH	0	POST TOP	NOT APPLICABLE	RIGID COLUMN	URBIS	AXIA 2 S1	MALLATITE	TUBULAR STEEL	6	GALVANISED	TUBULAR
46100694	HERRICK ROAD	Scunthorpe	487973.01	409430.53	2	7001	00188639	25/09/2020 00:00	5	2	LESS THAN 30MPH	BACK OF FOOTPATH	0	POST TOP	NOT APPLICABLE	RIGID COLUMN	URBIS	AXIA 2 S1	MALLATITE	TUBULAR STEEL	6	GALVANISED	TUBULAR
46100694	HERRICK ROAD	Scunthorpe	487974.67	409397.52	3	7002	00188640	01/04/1980 00:00	5	2	LESS THAN 30MPH	BACK OF FOOTPATH	300	SINGLE ARM	NOT APPLICABLE	RIGID COLUMN	URBIS	AXIA 2 S1	PETITJEAN	SHEET STEEL	5	GALVANISED	DAER
46100694	HERRICK ROAD	Scunthorpe	487983.14	409364.85	4	7003	00188641	01/04/1980 00:00	5	2	LESS THAN 30MPH	VERGE	800	SINGLE ARM	NOT APPLICABLE	RIGID COLUMN	URBIS	AXIA 2 S1	PETITJEAN	SHEET STEEL	5	GALVANISED	DAER
46100694	HERRICK ROAD	Scunthorpe	487972.33	409327.58	5	7004	00188642	01/04/2005 00:00	5	2	LESS THAN 30MPH	BACK OF FOOTPATH	0	POST TOP	NOT APPLICABLE	RIGID COLUMN	URBIS	AXIA 2 S1	T AND L	TUBULAR STEEL	6	GALVANISED	STEPPED TUBULAR
46100694	HERRICK ROAD	Scunthorpe	487985.67	409289.02	6	7005	00188643	01/04/2005 00:00	5	2	LESS THAN 30MPH	VERGE	0	POST TOP	NOT APPLICABLE	RIGID COLUMN	URBIS	AXIA 2 S1	T AND L	TUBULAR STEEL	6	GALVANISED	STEPPED TUBULAR
46100694	HERRICK ROAD	Scunthorpe	487979.25	409259.42	7	7006	00188644	01/04/2013 00:00	5	2	LESS THAN 30MPH	BACK OF FOOTPATH	0	POST TOP	NOT APPLICABLE	RIGID COLUMN	URBIS	AXIA 2 S1	MALLATITE	TUBULAR STEEL	6	GALVANISED	TUBULAR
46100694	HERRICK ROAD	Scunthorpe	487977.8	409226.74	8	7007	00188645	01/04/2010 00:00	5	2	LESS THAN 30MPH	BACK OF FOOTPATH	0	POST TOP	NOT APPLICABLE	RIGID COLUMN	URBIS	AXIA 2 S1	MALLATITE	TUBULAR STEEL	6	GALVANISED	TUBULAR
46100694	HERRICK ROAD	Scunthorpe	487980.14	409195.06	9	7008	00188646	01/04/2010 00:00	5	2	LESS THAN 30MPH	VERGE	0	POST TOP	NOT APPLICABLE	RIGID COLUMN	URBIS	AXIA 2 S1	MALLATITE	TUBULAR STEEL	6	GALVANISED	TUBULAR
46100695	HESSLE VIEW	Barton upon Humber Parish	502309.3	421845.34	1	7000	00188649	01/04/2004 00:00	5	2	LESS THAN 30MPH	VERGE	0	POST TOP	NOT APPLICABLE	RIGID COLUMN	URBIS	AXIA 2 S1	PETITJEAN	TUBULAR STEEL	5	GALVANISED	METRO
46100695	HESSLE VIEW	Barton upon Humber Parish	502280.65	421850.4	2	7001	00188650	01/04/2004 00:00	5	2	LESS THAN 30MPH	VERGE	0	POST TOP	MID GREY	RIGID COLUMN	URBIS	AXIA 2 S1	PETITJEAN	TUBULAR STEEL	5	PAINTED	METRO
46100696	HEWDE LANE	Winteringham Parish	492810.5	421903.92	1	7010	00188661	01/04/2016 00:00	1	3	LESS THAN 30MPH	ON POLE	300	SINGLE ARM	NOT APPLICABLE	POLE MOUNTED	PHILIPS	UNISTREET 4.5 KLM	WOODEN PO	WOOD	5	NOT APPLICABI	Not Applicable
46100696	HEWDE LANE	Winteringham Parish	492807.19	422288.19	10	7019	00188670	01/04/1999 00:00	1	3	LESS THAN 30MPH	VERGE	0	POST TOP	NOT APPLICABLE	RIGID COLUMN	URBIS	AXIA 2 S1	PETITJEAN	SHEET STEEL	5	GALVANISED	NIDD
46100696	HEWDE LANE	Winteringham Parish	492812.05	421957.02	2	7011	00188662	01/04/2016 00:00	1	3	LESS THAN 30MPH	ON POLE	300	SINGLE ARM	NOT APPLICABLE	POLE MOUNTED	PHILIPS	UNISTREET 4.5 KLM	WOODEN PO	WOOD	5	NOT APPLICABI	Not Applicable
46100696	HEWDE LANE	Winteringham Parish	492811.97	422012.68	3	7012	00188663	01/04/2016 00:00	1	3	LESS THAN 30MPH	ON POLE	300	SINGLE ARM	NOT APPLICABLE	POLE MOUNTED	PHILIPS	UNISTREET 4.5 KLM	WOODEN PO	WOOD	5	NOT APPLICABI	Not Applicable
46100696	HEWDE LANE	Winteringham Parish	492805.46	422070.65	4	7013	00188664	01/04/2016 00:00	1	3	LESS THAN 30MPH	ON POLE	300	SINGLE ARM	NOT APPLICABLE	POLE MOUNTED	PHILIPS	UNISTREET 4.5 KLM	WOODEN PO	WOOD	5	NOT APPLICABI	Not Applicable
46100696	HEWDE LANE	Winteringham Parish	492804.9	422108.54	5	7014	00188665	01/04/2016 00:00	1	3	LESS THAN 30MPH	ON POLE	300	SINGLE ARM	NOT APPLICABLE	POLE MOUNTED	PHILIPS	UNISTREET 4.5 KLM	WOODEN PO	WOOD	5	NOT APPLICABI	Not Applicable
46100696	HEWDE LANE	Winteringham Parish	492805.19	422152.95	6	7015	00188666	01/04/2016 00:00	1	3	LESS THAN 30MPH	ON POLE	300	SINGLE ARM	NOT APPLICABLE	POLE MOUNTED	PHILIPS	UNISTREET 4.5 KLM	WOODEN PO	WOOD	5	NOT APPLICABI	Not Applicable
46100696	HEWDE LANE	Winteringham Parish	492803.1	422204.19	7	7016	00188667	01/04/2016 00:00	1	3	LESS THAN 30MPH	ON POLE	300	SINGLE ARM	NOT APPLICABLE	POLE MOUNTED	URBIS	AXIA 2 S1	WOODEN PO	WOOD	5	NOT APPLICABI	Not Applicable
46100696	HEWDE LANE	Winteringham Parish	492806.13	422242.7	8	7017	00188668	01/04/2002 00:00	1	3	LESS THAN 30MPH	VERGE	0	POST TOP	NOT APPLICABLE	RIGID COLUMN	URBIS	AXIA 2 S1	MALLATITE	TUBULAR STEEL	5	GALVANISED	STEPPED TUBULAR
46100696	HEWDE LANE	Winteringham Parish	492806.67	422263.97	9	7018	00188669	01/04/2002 00:00	1	3	LESS THAN 30MPH	VERGE	0	POST TOP	NOT APPLICABLE	RIGID COLUMN	URBIS	AXIA 2 S1	MALLATITE	TUBULAR STEEL	5	GALVANISED	STEPPED TUBULAR
46100698	HIGH BURGAGE	Winteringham Parish	493169.08	422149.9	1	7000	00188671	01/04/1995 00:00	1	3	LESS THAN 30MPH	VERGE	0	POST TOP	NOT APPLICABLE	RIGID COLUMN	URBIS	AXIA 2 S1	PETITJEAN	SHEET STEEL	6	GALVANISED	NIDD
46100698	HIGH BURGAGE	Winteringham Parish	493162.09	422124.63	2	7001	00188672	01/04/1993 00:00	1	3	LESS THAN 30MPH	BACK OF FOOTPATH	800	SINGLE ARM	NOT APPLICABLE	RIGID COLUMN	URBIS	AXIA 2 S1	PETITJEAN	SHEET STEEL	6	GALVANISED	DAER
46100698	HIGH BURGAGE	Winteringham Parish	493145.37	422098.84	3	7002	00188673	01/04/1993 00:00	1	3	LESS THAN 30MPH	BACK OF FOOTPATH	800	SINGLE ARM	NOT APPLICABLE	RIGID COLUMN	URBIS	AXIA 2 S1	PETITJEAN	SHEET STEEL	6	GALVANISED	DAER
46100698	HIGH BURGAGE	Winteringham Parish	493137.8	422065.97	4	7003	00188674	01/04/1993 00:00	1	3	LESS THAN 30MPH	BACK OF FOOTPATH	800	SINGLE ARM	NOT APPLICABLE	RIGID COLUMN	URBIS	AXIA 2 S1	PETITJEAN	SHEET STEEL	6	GALVANISED	DAER
46100698	HIGH BURGAGE	Winteringham Parish	493130.41	422028.63	5	7004	00188675	01/04/1993 00:00	1	3	LESS THAN 30MPH	BACK OF FOOTPATH	800	SINGLE ARM	NOT APPLICABLE	RIGID COLUMN	URBIS	AXIA 2 S1	PETITJEAN	SHEET STEEL	6	GALVANISED	DAER
46100698	HIGH BURGAGE	Winteringham Parish	493138.17	422008.56	6	7005	00188676	01/04/1993 00:00	1	3	LESS THAN 30MPH	BACK OF FOOTPATH	800	SINGLE ARM	NOT APPLICABLE	RIGID COLUMN	URBIS	AXIA 2 S1	PETITJEAN	SHEET STEEL	6	GALVANISED	DAER
46100698	HIGH BURGAGE	Winteringham Parish	493123.65	421990.01	7	7006	00188677	01/04/1993 00:00	1	3	LESS THAN 30MPH	BACK OF FOOTPATH	800	SINGLE ARM	NOT APPLICABLE	RIGID COLUMN	URBIS	AXIA 2 S1	PETITJEAN	SHEET STEEL	6	GALVANISED	DAER
46100700	HIGH GARTH	Bottesford Parish	488715.04	406680.86	1	7002	00188680	01/04/1980 00:00	3	1	LESS THAN 30MPH	VERGE	0	POST TOP	NOT APPLICABLE	RIGID COLUMN	URBIS	AXIA 2 S1	PETITJEAN	SHEET STEEL	5	GALVANISED	NIDD
46100700	HIGH GARTH	Bottesford Parish	488704.71	406701.82	2	7003	00188681	01/04/1980 00:00	3	1	LESS THAN 30MPH	VERGE	0	POST TOP	NOT APPLICABLE	RIGID COLUMN	URBIS	AXIA 2 S1	PETITJEAN	SHEET STEEL	5	GALVANISED	NIDD
46100700	HIGH GARTH	Bottesford Parish	488697.18	406719.83	3	7000	00188678	01/04/1980 00:00	3	1	LESS THAN 30MPH	VERGE	0	POST TOP	NOT APPLICABLE	RIGID COLUMN	URBIS	AXIA 2 S1	PETITJEAN	SHEET STEEL	5	GALVANISED	NIDD
46100700	HIGH GARTH	Bottesford Parish	488682.66	406731.92	4	7001	00188679	01/04/1980 00:00	3	1	LESS THAN 30MPH	VERGE	0	POST TOP	NOT APPLICABLE	RIGID COLUMN	URBIS	AXIA 2 S1	PETITJEAN	SHEET STEEL	5	GALVANISED	NIDD
46100701	HIGH LEYS ROAD	Bottesford Parish	488552.46	407650.57	1	7000	00188682	01/04/1996 00:00	3	1	LESS THAN 30MPH	VERGE	800	SINGLE ARM	NOT APPLICABLE	RIGID COLUMN	URBIS	AXIA 2 S1	PETITJEAN	SHEET STEEL	6	GALVANISED	DAER
46100701	HIGH LEYS ROAD	Bottesford Parish	488596.53	407429.55	10	7009	00188691	01/04/1996 00:00	3	1	LESS THAN 30MPH	VERGE	800	SINGLE ARM	NOT APPLICABLE	RIGID COLUMN	URBIS	AXIA 2 S1	PETITJEAN	SHEET STEEL	6	GALVANISED	DAER
46100701	HIGH LEYS ROAD	Bottesford Parish	488598.15	407403.56	11	7010	00188692	01/04/1996 00:00	3	1	LESS THAN 30MPH	VERGE	800	SINGLE ARM	NOT APPLICABLE	RIGID COLUMN	URBIS	AXIA 2 S1	PETITJEAN	SHEET STEEL	6	GALVANISED	DAER
46100701	HIGH LEYS ROAD	Bottesford Parish	488616.43	407382.06	12	7011	00188693	01/04/1996 00:00	3	1	LESS THAN 30MPH	VERGE	800	SINGLE ARM	NOT APPLICABLE	RIGID COLUMN	URBIS	AXIA 2 S1	PETITJEAN	SHEET STEEL	6	GALVANISED	DAER
46100701	HIGH LEYS ROAD	Bottesford Parish	488612.93	407356.52	13	7012	00188694	01/04/1996 00:00	3	1	LESS THAN 30MPH	VERGE	800	SINGLE ARM	NOT APPLICABLE	RIGID COLUMN	URBIS	AXIA 2 S1	PETITJEAN	SHEET STEEL	6	GALVANISED	DAER
46100701	HIGH LEYS ROAD	Bottesford Parish	488617.71	407329.73	14	7013	00188695	01/04/1996 00:00	3	1	LESS THAN 30MPH	VERGE	800	SINGLE ARM	NOT APPLICABLE	RIGID COLUMN	URBIS	AXIA 2 S1	PETITJEAN	SHEET STEEL	6	GALVANISED	DAER
46100701	HIGH LEYS ROAD	Bottesford Parish	488631.15	407310.11	15	7014	00188696	01/04/1996 00:00	3	1	LESS THAN 30MPH	VERGE	800	SINGLE ARM	NOT APPLICABLE	RIGID COLUMN	URBIS	AXIA 2 S1	PETITJEAN	SHEET STEEL	6	GALVANISED	DAER
46100701	HIGH LEYS ROAD	Bottesford Parish	488631.07	407285.22	16	7015	00188697	01/04/1996 00:00	3	1	LESS THAN 30MPH	VERGE	800	SINGLE ARM	NOT APPLICABLE	RIGID COLUMN	URBIS	AXIA 2 S1	PETITJEAN	SHEET STEEL	6	GALVANISED	DAER
46100701	HIGH LEYS ROAD	Bottesford Parish	488620.15	407257.36	17	7016	00188698	01/04/1996 00:00	3	1	LESS THAN 30MPH	VERGE	800	SINGLE ARM	NOT APPLICABLE	RIGID COLUMN	URBIS	AXIA 2 S1	PETITJEAN	SHEET STEEL	6	GALVANISED	DAER
46100701	HIGH LEYS ROAD	Bottesford Parish	488617.34	407229.48	18	7017	00188699	01/04/1996 00:00	3	1	LESS THAN 30MPH	VERGE	800	SINGLE ARM	NOT APPLICABLE	RIGID COLUMN	URBIS	AXIA 2 S1	PETITJEAN	SHEET STEEL	6	GALVANISED	DAER
46100701	HIGH LEYS ROAD	Bottesford Parish	488626.06	407199.39	19	7018	00188700	01/04/1996 00:00	3	1	LESS THAN 30MPH	VERGE	800	SINGLE ARM	NOT APPLICABLE	RIGID COLUMN	URBIS	AXIA 2 S1	PETITJEAN	SHEET STEEL	6	GALVANISED	DAER
46100701	HIGH LEYS ROAD	Bottesford Parish	488539.39	407629.85	2	7001	00188683	01/04/1996 00:00	3	1	LESS THAN 30MPH	VERGE	800	SINGLE ARM	NOT APPLICABLE	RIGID COLUMN	URBIS	AXIA 2 S1	PETITJEAN	SHEET STEEL	6	GALVANISED	DAER
46100701	HIGH LEYS ROAD	Bottesford Parish	488618.54	407177.66	20	7019	00188701	01/04/1996 00:00	3	1	LESS THAN 30MPH	VERGE	800	SINGLE ARM	NOT APPLICABLE	RIGID COLUMN	URBIS	AXIA 2 S1	PETITJEAN	SHEET STEEL	6	GALVANISED	DAER
46100701	HIGH LEYS ROAD	Bottesford Parish	488632.26	407155.46	21	7020	00188702	01/04/1996 00:00	3	1	LESS THAN 30MPH	VERGE	800	SINGLE ARM	NOT APPLICABLE	RIGID COLUMN	URBIS	AXIA 2 S1	PETITJEAN	SHEET STEEL	6	GALVANISED	DAER
46100701	HIGH LEYS ROAD	Bottesford Parish	488640.86	407132.88	22	7021	00188703	01/04/1996 00:00	3	1	LESS THAN 30MPH	VERGE	800	SINGLE ARM	NOT APPLICABLE	RIGID COLUMN	URBIS	AXIA 2 S1	PETITJEAN	SHEET STEEL	6	GALVANISED	DAER
46100701	HIGH LEYS ROAD	Bottesford Parish	488641.03	407102.94	23	7022	00188704	01/04/1996 00:00	3	1	LESS THAN 30MPH	VERGE	800	SINGLE ARM	NOT APPLICABLE	RIGID COLUMN	URBIS	AXIA 2 S1	PETITJEAN	SHEET STEEL	6	GALVANISED	DAER
46100701	HIGH LEYS ROAD	Bottesford Parish	488646.13	407080.36	24	7023	00188705	01/04/1996 00:00	3	1	LESS THAN 30MPH	VERGE	800	SINGLE ARM	NOT APPLICABLE	RIGID COLUMN	URBIS	AXIA 2 S1	PETITJEAN	SHEET STEEL	6	GALVANISED	DAER
46100701	HIGH LEYS ROAD	Bottesford Parish	488654.86	407046.91	25	7024	00188706	26/03/2018 00:00	3	1	LESS THAN 30MPH	VERGE	0	POST TOP	NOT APPLICABLE	RIGID COLUMN	URBIS	AXIA 2 S1	VALMONT ST	TUBULAR STEEL	6	GALVANISED	TUBULAR
46100701	HIGH LEYS ROAD	Bottesford Parish	488644.65	407032.39	26	7025	00188707	01/04/1996 00:00	3	1	LESS THAN 30MPH	VERGE	800	SINGLE ARM	NOT APPLICABLE	RIGID COLUMN	URBIS	AXIA 2 S1	PETITJEAN	SHEET STEEL	6	GALVANISED	DAER
46100701	HIGH LEYS ROAD	Bottesford Parish	488534.76	407597.21	3	7002	00188684	01/04/1996 00:00	3	1	LESS THAN 30MPH	VERGE	800	SINGLE ARM	NOT APPLICABLE	RIGID COLUMN	URBIS	AXIA 2 S1	PETITJEAN	SHEET STEEL	6	GALVANISED	DAER
46100701	HIGH LEYS ROAD	Bottesford Parish	488533.85	407569.64	4	7003	00188685	01/04/1996 00:00	3	1	LESS THAN 30MPH	VERGE	800	SINGLE ARM	NOT APPLICABLE	RIGID COLUMN	URBIS	AXIA 2 S1	PETITJEAN	SHEET STEEL	6	GALVANISED	DAER
46100701	HIGH LEYS ROAD	Bottesford Parish	488535.79	407543.68	5	7004	00188686	01/04/1996 00:00	3	1	LESS THAN 30MPH	VERGE	800	SINGLE ARM	NOT APPLICABLE	RIGID COLUMN	URBIS	AXIA 2 S1	PETITJEAN	SHEET STEEL	6	GALVANISED	DAER
46100701	HIGH LEYS ROAD	Bottesford Parish	488549.03	407527.25	6	7005	00188687	01/04/1996 00:00	3	1	LESS THAN 30MPH	VERGE	800	SINGLE ARM	NOT APPLICABLE	RIGID COLUMN	URBIS	AXIA 2 S1	PETITJEAN	SHEET STEEL	6	GALVANISED	DAER
46100701	HIGH LEYS ROAD	Bottesford Parish	488558.43	407498.97	7	7006	00188688	01/04/1996 00:00	3	1	LESS THAN 30MPH	VERGE	800	SINGLE ARM	NOT APPLICABLE	RIGID COLUMN	URBIS	AXIA 2 S1	PETITJEAN	SHEET STEEL	6	GALVANISED	DAER
46100701	HIGH LEYS ROAD	Bottesford Parish	488560.06	407474.48	8	7007	00188689	01/04/1996 00:00	3	1	LESS THAN 30MPH	VERGE	800	SINGLE ARM	NOT APPLICABLE	RIGID COLUMN	URBIS	AXIA 2 S1	PETITJEAN	SHEET STEEL	6	GALVANISED	DAER
46100701	HIGH LEYS ROAD	Bottesford Parish	488572.07	407454.01	9	7008	00188690	15/10/2024 00:00	3	1	LESS THAN 30MPH	VERGE	800	SINGLE ARM	NOT APPLICABLE	RIGID COLUMN	URBIS	AXIA 2 S1	MALLATITE	TUBULAR STEEL	6	GALVANISED	TUBULAR
46100702	HIGH STREET	Barrow upon Humber Parish	507095.03	421085.74	1	7015	00203483	01/04/1996 00:00	4	1	NOT ON A ROAD	BACK OF FOOTPATH	500	DOUBLE ARM	BLACK	RIGID COLUMN	URBIS	ABBEY	MALLATITE	TUBULAR STEEL	6	PAINTED	TUBULAR
46100702	HIGH STREET	Barrow upon Humber Parish	507103.31	421230.52	10	7009	00188717	01/04/1973 00:00	4	1	LESS THAN 30MPH	BACK OF FOOTPATH	800	SINGLE ARM	MID GREY	RIGID COLUMN	URBIS	AXIA 2 S1	PETITJEAN	SHEET STEEL	5	PAINTED	DAER
46100702	HIGH STREET	Barrow upon Humber Parish	507117.42	421262.7	11	7010	00188718	01/04/1973 00:00	4	1	LESS THAN 30MPH	BACK OF FOOTPATH	800	SINGLE ARM	MID GREY	RIGID COLUMN	URBIS	AXIA 2 S1	PETITJEAN	SHEET STEEL	5	PAINTED	DAER
46100702	HIGH STREET	Barrow upon Humber Parish	507131.67	421295.99	12	7011	00188719	01/04/1973 00:00	4	1	LESS THAN 30MPH	BACK OF FOOTPATH	800	SINGLE ARM	MID GREY	RIGID COLUMN	URBIS	AXIA 2 S1	PETITJEAN	SHEET STEEL	5	PAINTED	DAER
46100702	HIGH STREET	Barrow upon Humber Parish	507145.32	421318.15	13	7012	00188720	01/04/1973 00:00	4	1	LESS THAN 30MPH	BACK OF FOOTPATH	800	SINGLE ARM	MID GREY	RIGID COLUMN	URBIS	AXIA 2 S1	PETITJEAN	SHEET STEEL	5	PAINTED	DAER
46100702	HIGH STREET	Barrow upon Humber Parish	507161.4	421344.3	14	7013	00188721	01/04/1973 00:00	4	1	LESS THAN 30MPH	BACK OF FOOTPATH	800	SINGLE ARM	MID GREY	RIGID COLUMN	URBIS	AXIA 2 S1	PETITJEAN	SHEET STEEL	5	PAINTED	DAER
46100702	HIGH STREET	Barrow upon Humber Parish	507179.36	421373.73	15	7014	00188722	01/04/1973 00:00	4	1	LESS THAN 30MPH	BACK OF FOOTPATH	800	SINGLE ARM	MID GREY	RIGID COLUMN	URBIS	AXIA 2 S1	PETITJEAN	SHEET STEEL	5	PAINTED	DAER
46100702	HIGH STREET	Barrow upon Humber Parish	507093.52	421102.88	2	7016	00203484	01/04/1996 00:00	4	1	NOT ON A ROAD	BACK OF FOOTPATH	500	DOUBLE ARM	BLACK	RIGID COLUMN	URBIS	ABBEY	MALLATITE	TUBULAR STEEL	6	PAINTED	TUBULAR
46100702	HIGH STREET	Barrow upon Humber Parish	507046.09	421040.54	2	7001	00188709	01/04/1973 00:00	4	1	LESS THAN 30MPH	BACK OF FOOTPATH	800	SINGLE ARM	NOT APPLICABLE	RIGID COLUMN	URBIS	AXIA 2 S1	PETITJEAN	SHEET STEEL	5	GALVANISED	DAER
46100702	HIGH STREET	Barrow upon Humber Parish	507049.26	421068.65	3	7002	00188710	01/04/1973 00:00	4

46100708	HIGH STREET	Burton upon Stather Parish	487057.2	417782.07	6	7005	00188874	01/04/1998 00:00	2	3	LESS THAN 30MPH	BACK OF FOOTPATH	0	POST TOP	BLACK	RIGID COLUMN	URBIS	ABBEY	MALLATITE	TUBULAR STEEL	6	PAINTED	STEPPED TUBULAR	
46100708	HIGH STREET	Burton upon Stather Parish	487051.18	417751.66	7	7006	00188875	01/04/1998 00:00	2	3	LESS THAN 30MPH	BACK OF FOOTPATH	0	POST TOP	BLACK	RIGID COLUMN	URBIS	ABBEY	MALLATITE	TUBULAR STEEL	6	PAINTED	STEPPED TUBULAR	
46100708	HIGH STREET	Burton upon Stather Parish	487067.24	417717.53	8	7007	00188876	01/04/1998 00:00	2	3	LESS THAN 30MPH	BACK OF FOOTPATH	0	POST TOP	BLACK	RIGID COLUMN	URBIS	ABBEY	MALLATITE	TUBULAR STEEL	6	PAINTED	STEPPED TUBULAR	
46100708	HIGH STREET	Burton upon Stather Parish	487062.37	417689.42	9	7008	00188877	01/04/1998 00:00	2	3	LESS THAN 30MPH	BACK OF FOOTPATH	0	POST TOP	BLACK	RIGID COLUMN	URBIS	ABBEY	MALLATITE	TUBULAR STEEL	6	PAINTED	STEPPED TUBULAR	
46100709	HIGH STREET EAST	Scunthorpe	490113.51	411483.33	1	7000	00188881	01/04/2010 00:00	4	4	LESS THAN 30MPH	BACK OF FOOTPATH	500	SINGLE ARM	NOT APPLICABLE	RIGID COLUMN	URBIS	AXIA 2 S1	VALMONT ST	SHEET STEEL	8	GALVANISED	THAMES	
46100709	HIGH STREET EAST	Scunthorpe	490224.73	411357.82	10	7009	00188890	01/04/1982 00:00	4	4	LESS THAN 30MPH	VERGE	1000	SINGLE ARM	NOT APPLICABLE	RIGID COLUMN	URBIS	AXIA 2 S1	PETITJEAN	SHEET STEEL	8	GALVANISED	THAMES	
46100709	HIGH STREET EAST	Scunthorpe	490239.23	411344.46	11	7010	00188891	01/04/2010 00:00	4	4	LESS THAN 30MPH	VERGE	0	POST TOP	NOT APPLICABLE	RIGID COLUMN	URBIS	AXIA 2 S1	VALMONT ST	TUBULAR STEEL	6	GALVANISED	TUBULAR	
46100709	HIGH STREET EAST	Scunthorpe	490261.76	411311.78	12	7011	00188892	29/07/2020 00:00	4	4	LESS THAN 30MPH	BACK OF FOOTPATH	0	POST TOP	NOT APPLICABLE	RIGID COLUMN	URBIS	AXIA 2 S1	MALLATITE	TUBULAR STEEL	6	GALVANISED	TUBULAR	
46100709	HIGH STREET EAST	Scunthorpe	490227.04	411333.91	13	7012	00188893	01/04/2012 00:00	4	4	LESS THAN 30MPH	FRONT OF FOOTPATH	500	SINGLE ARM	NOT APPLICABLE	RIGID COLUMN	URBIS	AXIA 2 S1	VALMONT ST	SHEET STEEL	8	GALVANISED	THAMES	
46100709	HIGH STREET EAST	Scunthorpe	490214.07	411308.72	14	7013	00188894	01/04/1982 00:00	4	4	LESS THAN 30MPH	BACK OF FOOTPATH	1250	SINGLE ARM	NOT APPLICABLE	RIGID COLUMN	URBIS	AXIA 2 S1	PETITJEAN	SHEET STEEL	8	GALVANISED	THAMES	
46100709	HIGH STREET EAST	Scunthorpe	490192.46	411288.28	15	7014	00188895	01/04/2000 00:00	4	4	LESS THAN 30MPH	BACK OF FOOTPATH	500	SINGLE ARM	NOT APPLICABLE	RIGID COLUMN	URBIS	AXIA 2 S1	PETITJEAN	SHEET STEEL	8	GALVANISED	THAMES	
46100709	HIGH STREET EAST	Scunthorpe	490163.53	411272.32	16	7015	00188896	01/04/2000 00:00	4	4	LESS THAN 30MPH	BACK OF FOOTPATH	1000	SINGLE ARM	NOT APPLICABLE	RIGID COLUMN	URBIS	AXIA 2 S1	PETITJEAN	SHEET STEEL	10	GALVANISED	THAMES	
46100709	HIGH STREET EAST	Scunthorpe	490142.92	411278.05	17	7016	00188897	01/04/2000 00:00	4	4	LESS THAN 30MPH	BACK OF FOOTPATH	1000	SINGLE ARM	NOT APPLICABLE	RIGID COLUMN	URBIS	AXIA 2 S1	PETITJEAN	SHEET STEEL	10	GALVANISED	THAMES	
46100709	HIGH STREET EAST	Scunthorpe	490107.6	411467.2	2	7001	00188882	01/04/2010 00:00	4	4	LESS THAN 30MPH	FRONT OF FOOTPATH	1000	SINGLE ARM	NOT APPLICABLE	RIGID COLUMN	URBIS	AXIA 2 S1	VALMONT ST	SHEET STEEL	8	GALVANISED	THAMES	
46100709	HIGH STREET EAST	Scunthorpe	490137.16	411453.22	3	7002	00188883	01/04/2011 00:00	4	4	LESS THAN 30MPH	BACK OF FOOTPATH	1250	SINGLE ARM	NOT APPLICABLE	RIGID COLUMN	URBIS	AXIA 2 S1	VALMONT ST	SHEET STEEL	8	GALVANISED	THAMES	
46100709	HIGH STREET EAST	Scunthorpe	490154.16	411417.79	4	7003	00188884	01/04/2011 00:00	4	4	LESS THAN 30MPH	BACK OF FOOTPATH	1000	SINGLE ARM	NOT APPLICABLE	RIGID COLUMN	URBIS	AXIA 2 S1	VALMONT ST	SHEET STEEL	8	GALVANISED	THAMES	
46100709	HIGH STREET EAST	Scunthorpe	490159.5	411388.79	5	7004	00188885	01/04/1982 00:00	4	4	LESS THAN 30MPH	BACK OF FOOTPATH	1250	SINGLE ARM	MID GREY	RIGID COLUMN	URBIS	AXIA 2 S1	PETITJEAN	SHEET STEEL	8	PAINTED	THAMES	
46100709	HIGH STREET EAST	Scunthorpe	490127.07	411373.53	6FP	7005	00188886	01/04/1982 00:00	4	4	LESS THAN 30MPH	FRONT OF FOOTPATH	1250	SINGLE ARM	MID GREY	RIGID COLUMN	URBIS	AXIA 2 S1	PETITJEAN	SHEET STEEL	8	PAINTED	THAMES	
46100709	HIGH STREET EAST	Scunthorpe	490107.61	411355.45	7	7006	00188887	01/04/1982 00:00	4	4	LESS THAN 30MPH	BACK OF FOOTPATH	1250	SINGLE ARM	MID GREY	RIGID COLUMN	URBIS	AXIA 2 S1	PETITJEAN	SHEET STEEL	8	PAINTED	THAMES	
46100709	HIGH STREET EAST	Scunthorpe	490185.3	411402.15	8	7007	00188888	01/04/1982 00:00	4	4	LESS THAN 30MPH	FRONT OF FOOTPATH	1000	SINGLE ARM	NOT APPLICABLE	RIGID COLUMN	URBIS	AXIA 2 S1	PETITJEAN	SHEET STEEL	8	GALVANISED	THAMES	
46100709	HIGH STREET EAST	Scunthorpe	490202.85	411368.57	9	7008	00188889	01/04/2011 00:00	4	4	LESS THAN 30MPH	BACK OF FOOTPATH	1000	SINGLE ARM	NOT APPLICABLE	RIGID COLUMN	URBIS	AXIA 2 S1	VALMONT ST	SHEET STEEL	8	GALVANISED	THAMES	
46100710	HIGH STREET	Epworth Parish	478317.46	403802.32	1	7001	00188901	01/04/2004 00:00	5	3	LESS THAN 30MPH	BACK OF FOOTPATH	800	SINGLE ARM	BLACK	RIGID COLUMN	URBIS	ALBANY	MALLATITE	TUBULAR STEEL	8	PAINTED	STEPPED TUBULAR	
46100710	HIGH STREET	Epworth Parish	478087.18	403911.68	10	7010	00188910	01/04/2004 00:00	5	3	LESS THAN 30MPH	BACK OF FOOTPATH	800	SINGLE ARM	BLACK	RIGID COLUMN	MSD	METRO	BRITISH STEE	TUBULAR STEEL	6	PAINTED	STEPPED TUBULAR	
46100710	HIGH STREET	Epworth Parish	478061.65	403923.83	11	7011	00188911	07/11/2022 00:00	5	3	LESS THAN 30MPH	BACK OF FOOTPATH	0	POST TOP	NOT APPLICABLE	RIGID COLUMN	URBIS	AXIA 2 S1	MALLATITE	TUBULAR STEEL	6	GALVANISED	TUBULAR	
46100710	HIGH STREET	Epworth Parish	478045.25	403931.4	12	7012	00188912	26/02/2021 00:00	5	3	LESS THAN 30MPH	BACK OF FOOTPATH	0	POST TOP	NOT APPLICABLE	RIGID COLUMN	URBIS	AXIA 2 S1	MALLATITE	TUBULAR STEEL	6	GALVANISED	TUBULAR	
46100710	HIGH STREET	Epworth Parish	478019.32	403941.08	13	7013	00188913	12/12/2018 00:00	5	3	LESS THAN 30MPH	BACK OF FOOTPATH	0	POST TOP	NOT APPLICABLE	RIGID COLUMN	URBIS	AXIA 2 S1	MALLATITE	TUBULAR STEEL	6	GALVANISED	TUBULAR	
46100710	HIGH STREET	Epworth Parish	477972.66	403948.95	14	7014	00188914	01/04/1985 00:00	5	3	LESS THAN 30MPH	BACK OF FOOTPATH	800	SINGLE ARM	NOT APPLICABLE	RIGID COLUMN	URBIS	AXIA 2 S1	PETITJEAN	SHEET STEEL	6	GALVANISED	DAER	
46100710	HIGH STREET	Epworth Parish	477942.44	403963.3	15	7015	00188915	01/04/1985 00:00	5	3	LESS THAN 30MPH	BACK OF FOOTPATH	800	SINGLE ARM	NOT APPLICABLE	RIGID COLUMN	URBIS	AXIA 2 S1	PETITJEAN	SHEET STEEL	6	GALVANISED	DAER	
46100710	HIGH STREET	Epworth Parish	477918.21	403983.51	16	7016	00188916	01/04/1989 00:00	5	3	LESS THAN 30MPH	BACK OF FOOTPATH	800	SINGLE ARM	NOT APPLICABLE	RIGID COLUMN	URBIS	AXIA 2 S1	PETITJEAN	SHEET STEEL	6	GALVANISED	DAER	
46100710	HIGH STREET	Epworth Parish	477900.14	404012.05	17	7017	00188917	01/04/1989 00:00	5	3	LESS THAN 30MPH	BACK OF FOOTPATH	800	SINGLE ARM	NOT APPLICABLE	RIGID COLUMN	URBIS	AXIA 2 S1	PETITJEAN	SHEET STEEL	6	GALVANISED	DAER	
46100710	HIGH STREET	Epworth Parish	477894.31	404043.38	18	7018	00188918	07/06/2019 00:00	5	3	LESS THAN 30MPH	BACK OF FOOTPATH	0	POST TOP	NOT APPLICABLE	RIGID COLUMN	URBIS	AXIA 2 S1	MALLATITE	TUBULAR STEEL	6	GALVANISED	TUBULAR	
46100710	HIGH STREET	Epworth Parish	477875.73	404073.64	19	7019	00188919	07/06/2019 00:00	5	3	LESS THAN 30MPH	BACK OF FOOTPATH	0	POST TOP	NOT APPLICABLE	RIGID COLUMN	URBIS	AXIA 2 S1	MALLATITE	TUBULAR STEEL	6	GALVANISED	TUBULAR	
46100710	HIGH STREET	Epworth Parish	478295.45	403822.27	2	7002	00188902	01/04/2004 00:00	5	3	LESS THAN 30MPH	BACK OF FOOTPATH	800	SINGLE ARM	BLACK	RIGID COLUMN	MSD	METRO	BRITISH STEE	TUBULAR STEEL	6	PAINTED	STEPPED TUBULAR	
46100710	HIGH STREET	Epworth Parish	477847.92	404092.64	20	7020	00188920	01/04/1985 00:00	5	3	LESS THAN 30MPH	BACK OF FOOTPATH	800	SINGLE ARM	NOT APPLICABLE	RIGID COLUMN	URBIS	AXIA 2 S1	PETITJEAN	SHEET STEEL	6	GALVANISED	DAER	
46100710	HIGH STREET	Epworth Parish	477824.94	404140.68	21	7021	00188921	01/04/1985 00:00	5	3	LESS THAN 30MPH	BACK OF FOOTPATH	800	SINGLE ARM	NOT APPLICABLE	RIGID COLUMN	URBIS	AXIA 2 S1	PETITJEAN	SHEET STEEL	6	GALVANISED	DAER	
46100710	HIGH STREET	Epworth Parish	478277.36	403837.66	3	7003	00188903	01/04/2004 00:00	5	3	LESS THAN 30MPH	BACK OF FOOTPATH	800	SINGLE ARM	BLACK	RIGID COLUMN	MSD	METRO	BRITISH STEE	TUBULAR STEEL	6	PAINTED	STEPPED TUBULAR	
46100710	HIGH STREET	Epworth Parish	478235.61	403868.58	4	7004	00188904	01/04/2004 00:00	5	3	LESS THAN 30MPH	BACK OF FOOTPATH	800	SINGLE ARM	BLACK	RIGID COLUMN	MSD	METRO	BRITISH STEE	TUBULAR STEEL	6	PAINTED	STEPPED TUBULAR	
46100710	HIGH STREET	Epworth Parish	478205.75	403874.89	5	7005	00188905	01/04/2004 00:00	5	3	LESS THAN 30MPH	BACK OF FOOTPATH	800	SINGLE ARM	BLACK	RIGID COLUMN	MSD	METRO	BRITISH STEE	TUBULAR STEEL	6	PAINTED	STEPPED TUBULAR	
46100710	HIGH STREET	Epworth Parish	478185.98	403878.25	6	7006	00188906	01/04/2004 00:00	5	3	LESS THAN 30MPH	BACK OF FOOTPATH	800	SINGLE ARM	BLACK	RIGID COLUMN	MSD	METRO	BRITISH STEE	TUBULAR STEEL	6	PAINTED	STEPPED TUBULAR	
46100710	HIGH STREET	Epworth Parish	478155.28	403874.47	7	7007	00188907	01/04/2004 00:00	5	3	LESS THAN 30MPH	BACK OF FOOTPATH	800	SINGLE ARM	BLACK	RIGID COLUMN	MSD	METRO	BRITISH STEE	TUBULAR STEEL	6	PAINTED	STEPPED TUBULAR	
46100710	HIGH STREET	Epworth Parish	478133.42	403893.63	8	7008	00188908	01/04/2004 00:00	5	3	LESS THAN 30MPH	BACK OF FOOTPATH	800	SINGLE ARM	BLACK	RIGID COLUMN	MSD	METRO	BRITISH STEE	TUBULAR STEEL	6	PAINTED	STEPPED TUBULAR	
46100710	HIGH STREET	Epworth Parish	478105.24	403892.79	9	7009	00188909	01/04/2004 00:00	5	3	LESS THAN 30MPH	BACK OF FOOTPATH	800	SINGLE ARM	BLACK	RIGID COLUMN	MSD	METRO	BRITISH STEE	TUBULAR STEEL	6	PAINTED	STEPPED TUBULAR	
46100711	HIGH STREET	Flixborough Parish	487104.7	414882.82	1	7000	00188922	01/04/1989 00:00	2	1	LESS THAN 30MPH	VERGE	0	POST TOP	NOT APPLICABLE	RIGID COLUMN	URBIS	AXIA 2 S1	PETITJEAN	SHEET STEEL	6	GALVANISED	DAER	
46100711	HIGH STREET	Flixborough Parish	487281.41	415040.82	10	7009	00188931	01/04/1989 00:00	2	1	LESS THAN 30MPH	BACK OF FOOTPATH	0	POST TOP	NOT APPLICABLE	RIGID COLUMN	URBIS	AXIA 2 S1	PETITJEAN	SHEET STEEL	6	GALVANISED	DAER	
46100711	HIGH STREET	Flixborough Parish	487314.25	415030.96	11	7010	00188932	01/04/1989 00:00	2	1	LESS THAN 30MPH	BACK OF FOOTPATH	0	POST TOP	NOT APPLICABLE	RIGID COLUMN	URBIS	AXIA 2 S1	PETITJEAN	SHEET STEEL	6	GALVANISED	DAER	
46100711	HIGH STREET	Flixborough Parish	487350.34	415017.4	12	7011	00188933	01/04/1989 00:00	2	1	LESS THAN 30MPH	VERGE	0	POST TOP	NOT APPLICABLE	RIGID COLUMN	URBIS	AXIA 2 S1	PETITJEAN	SHEET STEEL	6	GALVANISED	DAER	
46100711	HIGH STREET	Flixborough Parish	487379.2	415028.94	13	7012	00188934	01/04/1989 00:00	2	1	LESS THAN 30MPH	VERGE	0	POST TOP	NOT APPLICABLE	RIGID COLUMN	URBIS	AXIA 2 S1	PETITJEAN	SHEET STEEL	6	GALVANISED	DAER	
46100711	HIGH STREET	Flixborough Parish	487415.63	415043.75	14	7013	00188935	01/04/1989 00:00	2	1	LESS THAN 30MPH	VERGE	0	POST TOP	NOT APPLICABLE	RIGID COLUMN	URBIS	AXIA 2 S1	PETITJEAN	SHEET STEEL	6	GALVANISED	DAER	
46100711	HIGH STREET	Flixborough Parish	487446.97	415051.71	15	7014	00188936	01/04/1989 00:00	2	1	LESS THAN 30MPH	VERGE	0	POST TOP	NOT APPLICABLE	RIGID COLUMN	URBIS	AXIA 2 S1	PETITJEAN	SHEET STEEL	6	GALVANISED	DAER	
46100711	HIGH STREET	Flixborough Parish	487485.09	415057.31	16	7015	00188937	01/04/1989 00:00	2	1	LESS THAN 30MPH	BACK OF FOOTPATH	0	POST TOP	NOT APPLICABLE	RIGID COLUMN	URBIS	AXIA 2 S1	PETITJEAN	SHEET STEEL	6	GALVANISED	DAER	
46100711	HIGH STREET	Flixborough Parish	487511.49	415060.22	17	7016	00188938	01/04/1989 00:00	2	1	LESS THAN 30MPH	BACK OF FOOTPATH	0	POST TOP	NOT APPLICABLE	RIGID COLUMN	URBIS	AXIA 2 S1	PETITJEAN	SHEET STEEL	6	GALVANISED	DAER	
46100711	HIGH STREET	Flixborough Parish	487546.73	415061.83	18	7017	00188939	01/04/1989 00:00	2	1	LESS THAN 30MPH	BACK OF FOOTPATH	0	POST TOP	NOT APPLICABLE	RIGID COLUMN	URBIS	AXIA 2 S1	PETITJEAN	SHEET STEEL	6	GALVANISED	DAER	
46100711	HIGH STREET	Flixborough Parish	487577.06	415063.48	19	7018	00188940	01/04/1989 00:00	2	1	LESS THAN 30MPH	BACK OF FOOTPATH	0	POST TOP	NOT APPLICABLE	RIGID COLUMN	URBIS	AXIA 2 S1	PETITJEAN	SHEET STEEL	6	GALVANISED	DAER	
46100711	HIGH STREET	Flixborough Parish	487130.23	414902.71	2	7001	00188923	01/04/1989 00:00	2	1	LESS THAN 30MPH	BACK OF FOOTPATH	0	POST TOP	NOT APPLICABLE	RIGID COLUMN	URBIS	AXIA 2 S1	PETITJEAN	SHEET STEEL	6	GALVANISED	DAER	
46100711	HIGH STREET	Flixborough Parish	487604.75	415066.17	20	7019	00188941	01/04/1989 00:00	2	1	LESS THAN 30MPH	BACK OF FOOTPATH	0	POST TOP	NOT APPLICABLE	RIGID COLUMN	URBIS	AXIA 2 S1	PETITJEAN	SHEET STEEL	6	GALVANISED	DAER	
46100711	HIGH STREET	Flixborough Parish	487639.3	415069.53	21	7020	00188942	01/04/1989 00:00	2	1	LESS THAN 30MPH	BACK OF FOOTPATH	0	POST TOP	NOT APPLICABLE	RIGID COLUMN	URBIS	AXIA 2 S1	PETITJEAN	SHEET STEEL	6	GALVANISED	DAER	
46100711	HIGH STREET	Flixborough Parish	487666.83	415073.1	22	7021	00188943	01/04/1989 00:00	2	1	LESS THAN 30MPH	BACK OF FOOTPATH	0	POST TOP	NOT APPLICABLE	RIGID COLUMN	URBIS	AXIA 2 S1	PETITJEAN	SHEET STEEL	6	GALVANISED	DAER	
46100711	HIGH STREET	Flixborough Parish	487133.01	414941.2	3	7002	00188924	01/04/1989 00:00	2	1	LESS THAN 30MPH	BACK OF FOOTPATH	0	POST TOP	NOT APPLICABLE	RIGID COLUMN	URBIS	AXIA 2 S1	PETITJEAN	SHEET STEEL	6	GALVANISED	DAER	
46100711	HIGH STREET	Flixborough Parish	487125.72	414977.33	4	7003	00188925	01/04/1989 00:00	2	1	LESS THAN 30MPH	VERGE	0	POST TOP	NOT APPLICABLE	RIGID COLUMN	URBIS	AXIA 2 S1	PETITJEAN	SHEET STEEL	6	GALVANISED	DAER	
46100711	HIGH STREET	Flixborough Parish	487152.23	414995.06	5	7004	00188926	01/04/1989 00:00	2	1	LESS THAN 30MPH	VERGE	0	POST TOP	NOT APPLICABLE	RIGID COLUMN	URBIS	AXIA 2 S1	PETITJEAN	SHEET STEEL	6	GALVANISED	DAER	
46100711	HIGH STREET	Flixborough Parish	487176.97	415009.04	6	7005	00188927	01/04/1989 00:00	2	1	LESS THAN 30MPH	VERGE	0	POST TOP	NOT APPLICABLE	RIGID COLUMN	URBIS	AXIA 2 S1	PETITJEAN	SHEET STEEL	6	GALVANISED	DAER	
46100711	HIGH STREET	Flixborough Parish	487201.34	415024.35	7	7006	00188928	01/04/1989 00:00	2	1	LESS THAN 30MPH	VERGE	0	POST TOP	NOT APPLICABLE	RIGID COLUMN	URBIS	AXIA 2 S1	PETITJEAN	SHEET STEEL	6	GALVANISED	DAER	
46100711	HIGH STREET	Flixborough Parish	487228.95	415029.52	8	7007	00188929	01/04/1989 00:00	2	1	LESS THAN 30MPH	BACK OF FOOTPATH	0	POST TOP	NOT APPLICABLE	RIGID COLUMN	URBIS	AXIA 2 S1	PETITJEAN	SHEET STEEL	6	GALVANISED	DAER	
46100711	HIGH STREET	Flixborough Parish	487246.57	415046.92	9	7008	00188930	01/04/1989 00:00	2	1	LESS THAN 30MPH	BACK OF FOOTPATH	0	POST TOP	NOT APPLICABLE	RIGID COLUMN	URBIS	AXIA 2 S1	PETITJEAN	SHEET STEEL	6	GALVANISED	DAER	
46100712	HIGH STREET	Garthorpe and Fockerby Parish	484874.08	419172.33	1	7000	00188944	01/04/1988 00:00	6	1	LESS THAN 30MPH	BACK OF FOOTPATH	0	POST TOP	NOT APPLICABLE	RIGID COLUMN	URBIS	AXIA 2 S1	FABRIKAT	TUBULAR STEEL	5	GALVANISED	5M01A	
46100712	HIGH STREET	Garthorpe and Fockerby Parish	484793.27	419232.1	10	7009	00188953	01/04/1988 00:00	6	1	LESS THAN 30MPH	BACK OF FOOTPATH	0	POST TOP	NOT APPLICABLE	RIGID COLUMN	URBIS	AXIA 2 S1	FABRIKAT	TUBULAR STEEL	5	GALVANISED	5M01A	
46100712	HIGH STREET	Garthorpe and Fockerby Parish	484857.93	419144.73	2	7001	00188945	01/04/1988 00:00	6	1	LESS THAN 30MPH	BACK OF FOOTPATH	0	POST TOP	NOT APPLICABLE	RIGID COLUMN	URBIS	AXIA 2 S1	FABRIKAT	TUBULAR STEEL	5	GALVANISED	5M01A	
46100712	HIGH STREET	Garthorpe and Fockerby Parish	484829.91	419123.36	3	7002	00188946	01/04/1988 00:00	6	1	LESS THAN 30MPH	BACK OF FOOTPATH	0	POST TOP	NOT APPLICABLE	RIGID COLUMN	URBIS	AXIA 2 S1	FABRIKAT	TUBULAR STEEL	5	GALVANISED	5M01A	
46100712	HIGH STREET	Garthorpe and Fockerby Parish	484825.5	419088.93	4	7003	00188947	01/04/1988 00:00	6	1	LESS THAN 30MPH	BACK OF FOOTPATH	0	POST TOP	NOT APPLICABLE	RIGID COLUMN	URBIS	AXIA 2 S1	FABRIKAT	TUBULAR STEEL	5	GALVANISED	5M01A	
46100712	HIGH STREET	Garthorpe and Fockerby Parish	484817.84	419060.15	5	7004	00188948	01/04/1988 00:00	6	1	LESS THAN 30MPH	BACK OF FOOTPATH	0	POST TOP	NOT APPLICABLE	RIGID COLUMN	URBIS	AXIA 2 S1	FABRIKAT	TUBULAR STEEL	5	GALVANISED	5M01A	
46100712	HIGH STREET	Garthorpe and Fockerby Parish	484807.89	419031.89	6	7005	00188949	01/04/1988 00:00	6	1	LESS THAN 30MPH	BACK OF FOOTPATH	0	POST TOP	NOT APPLICABLE	RIGID COLUMN	URBIS	AXIA 2 S1	FABRIKAT	TUBULAR STEEL	5	GALVANISED	5M01A	
46100712	HIGH STREET	Garthorpe and Fockerby Parish	484794.66	419008.03	7	7006	00188950	01/04/1988 00:00	6	1	LESS THAN 30MPH	BACK OF FOOTPATH	0	POST TOP	NOT APPLICABLE	RIGID COLUMN	URBIS	AXIA 2 S1	FABRIKAT	TUBULAR STEEL	5	GALVANISED	5M01A	
46100712	HIGH STREET	Garthorpe and Fockerby Parish	484772.66	418990.69	8	7007	00188951	01/04/1988 00:00	6	1	LESS THAN 30MPH	VERGE	0	POST TOP	NOT APPLICABLE	RIGID COLUMN	URBIS	AXIA 2 S1	FABRIKAT	TUBULAR STEEL	5	GALVANISED	5M01A	
46100712	HIGH STREET	Garthorpe and Fockerby Parish	484775.58	418969.59	9	7008	00188952	01/04/1988 00:00	6	1	LESS THAN 30MPH	VERGE	0	POST TOP	NOT APPLICABLE	RIGID COLUMN	URBIS	AXIA 2 S1	FABRIKAT	TUBULAR STEEL	5	GALVANISED	5M01A	
46100713	HIGH STREET	Haxey Parish	476789.8	399890.76	1	7000	00188954	01/04/1978 00:00	6	2	LESS THAN 30MPH	VERGE	0	POST TOP	MID GREY	RIGID COLUMN	URBIS	AXIA 2 S1	FABRIKAT	TUBULAR STEEL	5	PAINTED	5M01A	
46100713	HIGH STREET	Haxey Parish	477085.34	399820.9	10	7009	00188963	03/05/2018 00:00	6	2	LESS THAN 30MPH	BACK OF FOOTPATH	0	POST TOP	NOT APPLICABLE	RIGID COLUMN	URBIS	AXIA 2 S1	VALMONT ST	TUBULAR STEEL	6	GALVANISED	TUBULAR	
46100713	HIGH STREET	Haxey Parish	477128.92	399804.26	11	7010	00188964	03/05/2018 00:00	6	2	LESS THAN 30MPH	BACK OF FOOTPATH	0	POST TOP	NOT APPLICABLE	RIGID COLUMN	URBIS	AXIA 2 S1	VALMONT ST	TUBULAR STEEL	6	GALVANISED	TUBULAR	
46100713	HIGH STREET	Haxey Parish	477165.6	399788.23	12	7011	00188965	03/05/2018 00:00	6	2	LESS THAN 30MPH	BACK OF FOOTPATH	0	POST TOP	NOT APPLICABLE	RIGID COLUMN	URBIS	AXIA 2 S1	VALMONT ST	TUBULAR STEEL	6	GALVANISED	TUBULAR	
46100713	HIGH STREET	Haxey Parish	477185.96	399766.58	13	7012	00188966	01/04/2001 00:00	6	2	LESS THAN 30MPH	BACK OF FOOTPATH	300	SINGLE ARM	NOT APPLICABLE	RIGID COLUMN	URBIS	AXIA 2 S1	MALLATITE	TUBULAR STEEL	6	GALVANISED	STEPPED TUBULAR	
46100713	HIGH STREET	Haxey Parish	477218.97	399758.97	14	7013	00188967	01/04/2001 00:00	6	2	LESS THAN 30MPH	BACK OF FOOTPATH	300	SINGLE ARM	NOT APPLICABLE	RIGID COLUMN	URBIS	AXIA 2 S1	MALLATITE	TUBULAR STEEL	6	GALVANISED	STEPPED TUBULAR	
46100713	HIGH STREET	Haxey Parish	477242.09	399739.62	15	7014	00188968	01/04/2001 00:00	6	2	LESS THAN 30MPH	BACK OF FOOTPATH	300	SINGLE ARM	NOT APPLICABLE	RIGID COLUMN	URBIS	AXIA 2 S1	MALLATITE	TUBULAR STEEL	6	GALVANISED	STEPPED TUBULAR	
46100713	HIGH STREET	Haxey Parish	477268.97	399742.3	16	7015	00188969	01/04/2001 00:00	6	2	LESS THAN 30MPH	BACK OF FOOTPATH	300	SINGLE ARM	NOT APPLICABLE	RIGID COLUMN	URBIS	AXIA 2 S1	MALLATITE	TUBULAR STEEL	6	GALVANISED	STEPPED TUBULAR	
46100713	HIGH STREET	Haxey Parish	477288.33	399728.33	17	7016	00188970	01/04/2001 00:00	6	2	LESS THAN 30MPH	BACK OF FOOTPATH	300	SINGLE ARM	NOT APPLICABLE	RIGID COLUMN	URBIS	AXIA 2 S1	MALLATITE	TUBULAR STEEL	6	GALVANISED	STEPPED TUBULAR	
46100713	HIGH STREET	Haxey Parish	476828.76	399883.35	2	7001	00188955	03/05/2018 00:00	6	2	LESS THAN 30MPH	BACK OF FOOTPATH	0	POST TOP	NOT APPLICABLE	RIGID COLUMN	URBIS	AXIA 2 S1	VALMONT ST	TUBULAR STEEL	6	GALVANISED	TUBULAR	
46100713	HIGH STREET	Haxey Parish	476857.03	399876.97	3	7002	00188956	01/04/1985 00:00	6	2	LESS THAN 30MPH	BACK OF FOOTPATH	300	SINGLE ARM	NOT APPLICABLE	RIGID COLUMN	URBIS	AXIA 2 S1	MALLATITE	TUBULAR STEEL	5	GALVANISED	STEPPED TUBULAR	
46100713	HIGH STREET	Haxey Parish	476886.79	399868.37	4	7003	00188957	03/05/2018 00:00	6	2	LESS THAN 30MPH	BACK OF FOOTPATH	0	POST TOP	NOT APPLICABLE	RIGID COLUMN	URBIS	AXIA 2 S1	VALMONT ST	TUBULAR STEEL	6	GALVANISED	TUBULAR	
46100713	HIGH STREET	Haxey Parish	476931.14	399852.67	5	7004	00188958	03/05/2018 00:00	6	2	LESS THAN 30MPH	BACK OF FOOTPATH	0	POST TOP	NOT APPLICABLE	RIGID COLUMN	URBIS	AXIA 2 S1	VALMONT ST	TUBULAR STEEL	6	GALVANISED	TUBULAR	
46100713	HIGH STREET	Haxey Parish	476953.45	399831.7	6	7005	00188959	03/05/2018 00:00

46100720	HIGH STREET	Scunthorpe	489710.72	411462.63	49	7084	00189123	01/04/1973 00:00	4	4	NOT ON A ROAD	CANOPY	0	NOT APPLICA	NOT APPLICABLE	CANOPY MOUNTED	WAVEGUIDE 3	TARFOX2 5.1KLM 5000	CANOPY MOU	NOT APPLICABLE	3	NOT APPLICABI	Not Applicable			
46100720	HIGH STREET	Scunthorpe	489818.26	411495.85	5	7040	00189079	01/04/1973 00:00	4	4	NOT ON A ROAD	CANOPY	0	NOT APPLICA	NOT APPLICABLE	CANOPY MOUNTED	WAVEGUIDE 3	TARFOX2 5.1KLM 5000	CANOPY MOU	NOT APPLICABLE	3	NOT APPLICABI	Not Applicable			
46100720	HIGH STREET	Scunthorpe	489788.26	411478.65	5	7004	00189043	01/04/1990 00:00	4	4	NOT ON A ROAD	OTHER	800	TRIPLE ARM	BLUE	RIGID COLUMN	PHILIPS	HPP133	SCUN	CAST IRON	5	PAINTED	SPECIAL			
46100720	HIGH STREET	Scunthorpe	489322.42	411354.41	5	7009	00189048	01/04/2013 00:00	4	4	LESS THAN 30MPH	FRONT OF FOOTPATH	1000	SINGLE ARM	NOT APPLICABLE	RIGID COLUMN	PHILIPS	LUMA 2 20 KLM	SAPA	ALUMINIUM	8	NOT APPLICABI	CONICAL			
46100720	HIGH STREET	Scunthorpe	489709.81	411452.61	50	7085	00189124	01/04/1973 00:00	4	4	NOT ON A ROAD	CANOPY	0	NOT APPLICA	NOT APPLICABLE	CANOPY MOUNTED	WAVEGUIDE 3	TARFOX2 5.1KLM 5000	CANOPY MOU	NOT APPLICABLE	3	NOT APPLICABI	Not Applicable			
46100720	HIGH STREET	Scunthorpe	489704.74	411450.37	51	7086	00189125	01/04/1973 00:00	4	4	NOT ON A ROAD	CANOPY	0	NOT APPLICA	NOT APPLICABLE	CANOPY MOUNTED	WAVEGUIDE 3	TARFOX2 5.1KLM 5000	CANOPY MOU	NOT APPLICABLE	3	NOT APPLICABI	Not Applicable			
46100720	HIGH STREET	Scunthorpe	489699.82	411447.82	52	7087	00189126	01/04/1973 00:00	4	4	NOT ON A ROAD	CANOPY	0	NOT APPLICA	NOT APPLICABLE	CANOPY MOUNTED	WAVEGUIDE 3	TARFOX2 5.1KLM 5000	CANOPY MOU	NOT APPLICABLE	3	NOT APPLICABI	Not Applicable			
46100720	HIGH STREET	Scunthorpe	489694.9	411445.81	53	7088	00189127	01/04/1973 00:00	4	4	NOT ON A ROAD	CANOPY	0	NOT APPLICA	NOT APPLICABLE	CANOPY MOUNTED	WAVEGUIDE 3	TARFOX2 5.1KLM 5000	CANOPY MOU	NOT APPLICABLE	3	NOT APPLICABI	Not Applicable			
46100720	HIGH STREET	Scunthorpe	489689.61	411443.26	54	7089	00189128	01/04/1973 00:00	4	4	NOT ON A ROAD	CANOPY	0	NOT APPLICA	NOT APPLICABLE	CANOPY MOUNTED	WAVEGUIDE 3	TARFOX2 5.1KLM 5000	CANOPY MOU	NOT APPLICABLE	3	NOT APPLICABI	Not Applicable			
46100720	HIGH STREET	Scunthorpe	489685.42	411441.62	55	7090	00189129	01/04/1973 00:00	4	4	NOT ON A ROAD	CANOPY	0	NOT APPLICA	NOT APPLICABLE	CANOPY MOUNTED	WAVEGUIDE 3	TARFOX2 5.1KLM 5000	CANOPY MOU	NOT APPLICABLE	3	NOT APPLICABI	Not Applicable			
46100720	HIGH STREET	Scunthorpe	489679.49	411439.15	56	7091	00189130	01/04/1973 00:00	4	4	NOT ON A ROAD	CANOPY	0	NOT APPLICA	NOT APPLICABLE	CANOPY MOUNTED	WAVEGUIDE 3	TARFOX2 5.1KLM 5000	CANOPY MOU	NOT APPLICABLE	3	NOT APPLICABI	Not Applicable			
46100720	HIGH STREET	Scunthorpe	489815.98	411503.83	6	7041	00189080	01/04/1973 00:00	4	4	NOT ON A ROAD	CANOPY	0	NOT APPLICA	NOT APPLICABLE	CANOPY MOUNTED	WAVEGUIDE 3	TARFOX2 5.1KLM 5000	CANOPY MOU	NOT APPLICABLE	3	NOT APPLICABI	Not Applicable			
46100720	HIGH STREET	Scunthorpe	489351.54	411349.53	6	7010	00189049	01/04/2013 00:00	4	4	LESS THAN 30MPH	FRONT OF FOOTPATH	1000	SINGLE ARM	NOT APPLICABLE	RIGID COLUMN	PHILIPS	LUMA 2 20 KLM	SAPA	ALUMINIUM	8	NOT APPLICABI	CONICAL			
46100720	HIGH STREET	Scunthorpe	489378.66	411364.39	7	7011	00189050	01/04/2013 00:00	4	4	LESS THAN 30MPH	FRONT OF FOOTPATH	1000	SINGLE ARM	NOT APPLICABLE	RIGID COLUMN	PHILIPS	LUMA 2 20 KLM	SAPA	ALUMINIUM	8	NOT APPLICABI	CONICAL			
46100720	HIGH STREET	Scunthorpe	489812.82	411494.13	7	7042	00189081	01/04/1973 00:00	4	4	NOT ON A ROAD	CANOPY	0	NOT APPLICA	NOT APPLICABLE	CANOPY MOUNTED	WAVEGUIDE 3	TARFOX2 5.1KLM 5000	CANOPY MOU	NOT APPLICABLE	3	NOT APPLICABI	Not Applicable			
46100720	HIGH STREET	Scunthorpe	489494.75	411383.88	7	7101	00189140	01/04/1980 00:00	4	4	NOT ON A ROAD	OTHER	800	DOUBLE ARM	GREEN	RIGID COLUMN	PHILIPS	HPP133	SCUN	CAST IRON	5	PAINTED	SPECIAL			
46100720	HIGH STREET	Scunthorpe	489810.99	411503.03	8	7043	00189082	01/04/1973 00:00	4	4	NOT ON A ROAD	CANOPY	0	NOT APPLICA	NOT APPLICABLE	CANOPY MOUNTED	WAVEGUIDE 3	TARFOX2 5.1KLM 5000	CANOPY MOU	NOT APPLICABLE	3	NOT APPLICABI	Not Applicable			
46100720	HIGH STREET	Scunthorpe	489411.77	411360.2	8	7012	00189051	01/04/2013 00:00	4	4	LESS THAN 30MPH	FRONT OF FOOTPATH	1000	SINGLE ARM	NOT APPLICABLE	RIGID COLUMN	PHILIPS	LUMA 2 20 KLM	SAPA	ALUMINIUM	8	NOT APPLICABI	CONICAL			
46100720	HIGH STREET	Scunthorpe	489515.88	411383.88	8	7102	00189141	01/04/1980 00:00	4	4	NOT ON A ROAD	OTHER	800	DOUBLE ARM	GREEN	RIGID COLUMN	PHILIPS	HPP133	SCUN	CAST IRON	5	PAINTED	SPECIAL			
46100720	HIGH STREET	Scunthorpe	489531.69	411393.23	9	7103	00189142	01/04/1980 00:00	4	4	NOT ON A ROAD	OTHER	800	DOUBLE ARM	GREEN	RIGID COLUMN	PHILIPS	HPP133	SCUN	CAST IRON	5	PAINTED	SPECIAL			
46100720	HIGH STREET	Scunthorpe	489807.46	411493	9	7044	00189083	01/04/1973 00:00	4	4	NOT ON A ROAD	CANOPY	0	NOT APPLICA	NOT APPLICABLE	CANOPY MOUNTED	WAVEGUIDE 3	TARFOX2 5.1KLM 5000	CANOPY MOU	NOT APPLICABLE	3	NOT APPLICABI	Not Applicable			
46100721	HIGH STREET	South Ferriby Parish	498852.82	420982.24	1	7000	00189154	01/04/1996 00:00	6	3	LESS THAN 30MPH	BACK OF FOOTPATH	1500	SINGLE ARM	NOT APPLICABLE	RIGID COLUMN	URBIS	AXIA 2 S1	PETITJEAN	SHEET STEEL	10	GALVANISED	THAMES			
46100721	HIGH STREET	South Ferriby Parish	498839.74	420954.81	2	7001	00189155	01/04/1996 00:00	6	3	LESS THAN 30MPH	BACK OF FOOTPATH	300	SINGLE ARM	NOT APPLICABLE	RIGID COLUMN	URBIS	AXIA 2 S1	PETITJEAN	TUBULAR STEEL	5	GALVANISED	STEPPED TUBULAR			
46100721	HIGH STREET	South Ferriby Parish	498819.22	420938.84	3	7002	00189156	01/04/1996 00:00	6	3	LESS THAN 30MPH	BACK OF FOOTPATH	300	SINGLE ARM	NOT APPLICABLE	RIGID COLUMN	URBIS	AXIA 2 S1	PETITJEAN	TUBULAR STEEL	5	GALVANISED	STEPPED TUBULAR			
46100721	HIGH STREET	South Ferriby Parish	498819.67	420914.47	4	7003	00189157	01/04/1996 00:00	6	3	LESS THAN 30MPH	VERGE	300	SINGLE ARM	NOT APPLICABLE	RIGID COLUMN	URBIS	AXIA 2 S1	PETITJEAN	TUBULAR STEEL	5	GALVANISED	STEPPED TUBULAR			
46100721	HIGH STREET	South Ferriby Parish	498803.04	420892.73	5	7004	00189158	01/04/1996 00:00	6	3	LESS THAN 30MPH	BACK OF FOOTPATH	300	SINGLE ARM	NOT APPLICABLE	RIGID COLUMN	URBIS	AXIA 2 S1	PETITJEAN	TUBULAR STEEL	5	GALVANISED	STEPPED TUBULAR			
46100721	HIGH STREET	South Ferriby Parish	498793.14	420870.49	6	7005	00189159	01/04/1996 00:00	6	3	LESS THAN 30MPH	BACK OF FOOTPATH	300	SINGLE ARM	NOT APPLICABLE	RIGID COLUMN	URBIS	AXIA 2 S1	PETITJEAN	TUBULAR STEEL	5	GALVANISED	STEPPED TUBULAR			
46100721	HIGH STREET	South Ferriby Parish	498781.78	420844.98	7	7006	00189160	01/04/1996 00:00	6	3	LESS THAN 30MPH	BACK OF FOOTPATH	300	SINGLE ARM	NOT APPLICABLE	RIGID COLUMN	URBIS	AXIA 2 S1	PETITJEAN	TUBULAR STEEL	5	GALVANISED	STEPPED TUBULAR			
46100721	HIGH STREET	South Ferriby Parish	498772.98	420826.66	8	7007	00189161	01/04/1996 00:00	6	3	LESS THAN 30MPH	BACK OF FOOTPATH	300	SINGLE ARM	NOT APPLICABLE	RIGID COLUMN	URBIS	AXIA 2 S1	PETITJEAN	TUBULAR STEEL	5	GALVANISED	STEPPED TUBULAR			
46100722	HIGH STREET	Ulceby Parish	510366.97	414761.89	1	7000	00189162	01/04/1980 00:00	3	1	LESS THAN 30MPH	BACK OF FOOTPATH	1500	SINGLE ARM	LIGHT GREY	RIGID COLUMN	URBIS	AXIA 2 S1	PETITJEAN	SHEET STEEL	10	PAINTED	THAMES			
46100722	HIGH STREET	Ulceby Parish	510381.08	414741.03	2	7001	00189163	01/04/1980 00:00	3	1	LESS THAN 30MPH	BACK OF FOOTPATH	1500	SINGLE ARM	LIGHT GREY	RIGID COLUMN	URBIS	AXIA 2 S1	PETITJEAN	SHEET STEEL	10	PAINTED	THAMES			
46100722	HIGH STREET	Ulceby Parish	510415.77	414748.96	3	7002	00189164	01/04/1980 00:00	3	1	LESS THAN 30MPH	BACK OF FOOTPATH	1500	SINGLE ARM	LIGHT GREY	RIGID COLUMN	URBIS	AXIA 2 S1	PETITJEAN	SHEET STEEL	10	PAINTED	THAMES			
46100722	HIGH STREET	Ulceby Parish	510455.84	414755.03	4	7003	00189165	01/04/1980 00:00	3	1	LESS THAN 30MPH	BACK OF FOOTPATH	1500	SINGLE ARM	LIGHT GREY	RIGID COLUMN	URBIS	AXIA 2 S1	PETITJEAN	SHEET STEEL	10	PAINTED	THAMES			
46100722	HIGH STREET	Ulceby Parish	510500.33	414759.57	5	7004	00189166	01/04/1980 00:00	3	1	LESS THAN 30MPH	BACK OF FOOTPATH	1500	SINGLE ARM	LIGHT GREY	RIGID COLUMN	URBIS	AXIA 2 S1	PETITJEAN	SHEET STEEL	10	PAINTED	THAMES			
46100723	HIGH STREET	Winterton Parish	492718.71	418534.79	1	7000	00189167	01/04/1993 00:00	1	1	LESS THAN 30MPH	BACK OF FOOTPATH	800	SINGLE ARM	NOT APPLICABLE	RIGID COLUMN	URBIS	AXIA 2 S1	PETITJEAN	SHEET STEEL	6	GALVANISED	DAER			
46100723	HIGH STREET	Winterton Parish	492693.01	418523.12	2	7001	00189168	01/04/1993 00:00	1	1	LESS THAN 30MPH	BACK OF FOOTPATH	800	SINGLE ARM	NOT APPLICABLE	RIGID COLUMN	URBIS	AXIA 2 S1	PETITJEAN	SHEET STEEL	6	GALVANISED	DAER			
46100723	HIGH STREET	Winterton Parish	492661.48	418519.93	3	7002	00189169	01/04/1993 00:00	1	1	LESS THAN 30MPH	BACK OF FOOTPATH	800	SINGLE ARM	NOT APPLICABLE	RIGID COLUMN	URBIS	AXIA 2 S1	PETITJEAN	SHEET STEEL	6	GALVANISED	DAER			
46100723	HIGH STREET	Winterton Parish	492629.64	418528.12	4FP	7006	00189173	01/04/1993 00:00	1	1	LESS THAN 30MPH	BACK OF FOOTPATH	800	SINGLE ARM	NOT APPLICABLE	RIGID COLUMN	URBIS	AXIA 2 S1	PETITJEAN	SHEET STEEL	6	GALVANISED	DAER			
46100723	HIGH STREET	Winterton Parish	492603.83	418524.88	5	7003	00189170	01/04/1993 00:00	1	1	LESS THAN 30MPH	BACK OF FOOTPATH	800	SINGLE ARM	NOT APPLICABLE	RIGID COLUMN	URBIS	AXIA 2 S1	PETITJEAN	SHEET STEEL	6	GALVANISED	DAER			
46100723	HIGH STREET	Winterton Parish	492581.09	418512.57	6	7004	00189171	01/04/1993 00:00	1	1	LESS THAN 30MPH	BACK OF FOOTPATH	800	SINGLE ARM	NOT APPLICABLE	RIGID COLUMN	URBIS	AXIA 2 S1	PETITJEAN	SHEET STEEL	6	GALVANISED	DAER			
46100723	HIGH STREET	Winterton Parish	492555.88	418521.52	7	7005	00189172	01/04/1993 00:00	1	1	LESS THAN 30MPH	BACK OF FOOTPATH	800	SINGLE ARM	NOT APPLICABLE	RIGID COLUMN	URBIS	AXIA 2 S1	PETITJEAN	SHEET STEEL	6	GALVANISED	DAER			
46100723	HIGH STREET	Winterton Parish	492522.01	418506.47	8FP	7007	00189174	01/04/2012 00:00	1	1	LESS THAN 30MPH	VERGE	500	SINGLE ARM	NOT APPLICABLE	RIGID COLUMN	URBIS	AXIA 2 S1	VALMONT ST	SHEET STEEL	8	GALVANISED	THAMES			
46100724	HIGH STREET	Wootton Parish	509023.84	416111.22	1	7000	00189175	30/07/2024 00:00	4	4	LESS THAN 30MPH	VERGE	1000	SINGLE ARM	NOT APPLICABLE	RIGID COLUMN	URBIS	AXIA 2 S1	MALLATITE	TUBULAR STEEL	8	GALVANISED	TUBULAR			
46100724	HIGH STREET	Wootton Parish	508799.54	416051.9	10	7009	00189184	30/07/2024 00:00	4	4	LESS THAN 30MPH	VERGE	0	POST TOP	NOT APPLICABLE	RIGID COLUMN	URBIS	AXIA 2 S1	MALLATITE	TUBULAR STEEL	5	GALVANISED	TUBULAR			
46100724	HIGH STREET	Wootton Parish	508770.24	416048.49	11	7010	00189185	30/07/2024 00:00	4	4	LESS THAN 30MPH	VERGE	0	POST TOP	NOT APPLICABLE	RIGID COLUMN	URBIS	AXIA 2 S1	MALLATITE	TUBULAR STEEL	5	GALVANISED	TUBULAR			
46100724	HIGH STREET	Wootton Parish	508733.75	416045.88	12	7011	00189186	01/04/1988 00:00	4	4	LESS THAN 30MPH	FRONT OF FOOTPATH	800	SINGLE ARM	NOT APPLICABLE	RIGID COLUMN	URBIS	AXIA 2 S1	PETITJEAN	SHEET STEEL	6	GALVANISED	DAER			
46100724	HIGH STREET	Wootton Parish	508700.42	416057.55	13	7012	00189187	01/04/1988 00:00	4	4	LESS THAN 30MPH	BACK OF FOOTPATH	300	SINGLE ARM	NOT APPLICABLE	POLE MOUNTED	URBIS	AXIA 2 S1	WOODEN PO	WOOD	5	NOT APPLICABI	Not Applicable			
46100724	HIGH STREET	Wootton Parish	508703.32	416042.5	14	7013	00189188	01/04/1988 00:00	4	4	LESS THAN 30MPH	BACK OF FOOTPATH	800	SINGLE ARM	NOT APPLICABLE	RIGID COLUMN	URBIS	AXIA 2 S1	PETITJEAN	SHEET STEEL	6	GALVANISED	DAER			
46100724	HIGH STREET	Wootton Parish	508668.06	416042.52	15	7014	00189189	01/04/1988 00:00	4	4	LESS THAN 30MPH	BACK OF FOOTPATH	800	SINGLE ARM	NOT APPLICABLE	RIGID COLUMN	URBIS	AXIA 2 S1	PETITJEAN	SHEET STEEL	6	GALVANISED	DAER			
46100724	HIGH STREET	Wootton Parish	508632.67	416049.81	16	7015	00189190	01/04/1988 00:00	4	4	LESS THAN 30MPH	BACK OF FOOTPATH	300	SINGLE ARM	NOT APPLICABLE	POLE MOUNTED	URBIS	AXIA 2 S1	WOODEN PO	WOOD	5	NOT APPLICABI	Not Applicable			
46100724	HIGH STREET	Wootton Parish	508599.01	416051.94	17	7016	00189191	01/04/1988 00:00	4	4	LESS THAN 30MPH	BACK OF FOOTPATH	300	SINGLE ARM	NOT APPLICABLE	POLE MOUNTED	URBIS	AXIA 2 S1	WOODEN PO	WOOD	5	NOT APPLICABI	Not Applicable			
46100724	HIGH STREET	Wootton Parish	508556.39	416050.84	18	7017	00189192	01/04/1988 00:00	4	4	LESS THAN 30MPH	BACK OF FOOTPATH	300	SINGLE ARM	NOT APPLICABLE	POLE MOUNTED	URBIS	AXIA 2 S1	WOODEN PO	WOOD	5	NOT APPLICABI	Not Applicable			
46100724	HIGH STREET	Wootton Parish	508509.62	416044.36	19	7018	00189193	01/04/1988 00:00	4	4	LESS THAN 30MPH	BACK OF FOOTPATH	300	SINGLE ARM	NOT APPLICABLE	POLE MOUNTED	URBIS	AXIA 2 S1	WOODEN PO	WOOD	5	NOT APPLICABI	Not Applicable			
46100724	HIGH STREET	Wootton Parish	509005.45	416108.67	2	7001	00189176	30/07/2024 00:00	4	4	LESS THAN 30MPH	VERGE	800	SINGLE ARM	NOT APPLICABLE	RIGID COLUMN	URBIS	AXIA 2 S1	MALLATITE	TUBULAR STEEL	8	GALVANISED	TUBULAR			
46100724	HIGH STREET	Wootton Parish	508465.94	416038.41	20	7019	00189194	01/04/1988 00:00	4	4	LESS THAN 30MPH	BACK OF FOOTPATH	300	SINGLE ARM	NOT APPLICABLE	POLE MOUNTED	URBIS	AXIA 2 S1	WOODEN PO	WOOD	5	NOT APPLICABI	Not Applicable			
46100724	HIGH STREET	Wootton Parish	508429.82	416023.46	21	7020	00189195	01/04/1988 00:00	4	4	LESS THAN 30MPH	FRONT OF FOOTPATH	300	SINGLE ARM	NOT APPLICABLE	POLE MOUNTED	URBIS	AXIA 2 S1	WOODEN PO	WOOD	5	NOT APPLICABI	Not Applicable			
46100724	HIGH STREET	Wootton Parish	508390.31	416020.69	22	7021	00189196	07/12/2021 00:00	4	4	GREATER THAN 50MPH	BACK OF FOOTPATH	300	SINGLE ARM	NOT APPLICABLE	POLE MOUNTED	URBIS	AXIA 2 S1	WOODEN PO	WOOD	5	NOT APPLICABI	PUDSEY DIAMOND			
46100724	HIGH STREET	Wootton Parish	508345.67	416016	23	7022	00189197	01/04/1988 00:00	4	4	GREATER THAN 50MPH	VERGE	300	SINGLE ARM	NOT APPLICABLE	POLE MOUNTED	URBIS	AXIA 2 S1	WOODEN PO	WOOD	5	NOT APPLICABI	Not Applicable			
46100724	HIGH STREET	Wootton Parish	508308.17	416022.34	24	7023	00189198	01/04/2002 00:00	4	4	LESS THAN 30MPH	BACK OF FOOTPATH	300	SINGLE ARM	NOT APPLICABLE	RIGID COLUMN	URBIS	AXIA 2 S1	MALLATITE	TUBULAR STEEL	6	GALVANISED	STEPPED TUBULAR			
46100724	HIGH STREET	Wootton Parish	508276.91	416017.8	25	7024	00189199	01/04/2002 00:00	4	4	LESS THAN 30MPH	BACK OF FOOTPATH	300	SINGLE ARM	NOT APPLICABLE	RIGID COLUMN	URBIS	AXIA 2 S1	MALLATITE	TUBULAR STEEL	6	GALVANISED	STEPPED TUBULAR			
46100724	HIGH STREET	Wootton Parish	508238.06	416012.79	26	7025	00189200	01/04/2002 00:00	4	4	LESS THAN 30MPH	BACK OF FOOTPATH	300	SINGLE ARM	NOT APPLICABLE	RIGID COLUMN	URBIS	AXIA 2 S1	MALLATITE	TUBULAR STEEL	6	GALVANISED	STEPPED TUBULAR			
46100724	HIGH STREET	Wootton Parish	508974.25	416108.32	3	7002	00189177	30/07/2024 00:00	4	4	LESS THAN 30MPH	BACK OF FOOTPATH	0	POST TOP	NOT APPLICABLE	RIGID COLUMN	URBIS	AXIA 2 S1	MALLATITE	TUBULAR STEEL	5	GALVANISED	TUBULAR			
46100724	HIGH STREET	Wootton Parish	508941.79	416100.01	4FP	7003	00189178	30/07/2024 00:00	4	4	LESS THAN 30MPH	BACK OF FOOTPATH	0	POST TOP	NOT APPLICABLE	RIGID COLUMN	URBIS	AXIA 2 S1	MALLATITE	TUBULAR STEEL	5	GALVANISED	TUBULAR			
46100724	HIGH STREET	Wootton Parish	508925.77	416089.63	5	7004	00189179	30/07/2024 00:00	4	4	LESS THAN 30MPH	BACK OF FOOTPATH	0	POST TOP	NOT APPLICABLE	RIGID COLUMN	URBIS	AXIA 2 S1	MALLATITE	TUBULAR STEEL	5	GALVANISED	TUBULAR			
46100724	HIGH STREET	Wootton Parish	508912.57	416071.47	6	7005	00189180	30/07/2024 00:00	4	4	LESS THAN 30MPH	BACK OF FOOTPATH	0	POST TOP	NOT APPLICABLE	RIGID COLUMN	URBIS	AXIA 2 S1	MALLATITE	TUBULAR STEEL	5	GALVANISED	TUBULAR			
46100724	HIGH STREET	Wootton Parish	508902.48	416047.07	7	7006	00189181	30/07/2024 00:00	4	4	LESS THAN 30MPH	BACK OF FOOTPATH	0	POST TOP	NOT APPLICABLE	RIGID COLUMN	URBIS	AXIA 2 S1	MALLATITE	TUBULAR STEEL	5	GALVANISED	TUBULAR			
46100724	HIGH STREET	Wootton Parish	508862.95	416053.83	8	7007	00189182	30/07/2024 00:00	4	4	LESS THAN 30MPH	BACK OF FOOTPATH	0	POST TOP	NOT APPLICABLE	RIGID COLUMN	URBIS	AXIA 2 S1	MALLATITE	TUBULAR STEEL	5	GALVANISED	TUBULAR			
46100724	HIGH STREET	Wootton Parish	508837.9	416052.44	9FP	7008	00189183	30/07/2024 00:00	4	4	LESS THAN 30MPH	BACK OF FOOTPATH	0	POST TOP	NOT APPLICABLE	RIGID COLUMN	URBIS	AXIA 2 S1	MALLATITE	TUBULAR STEEL	5	GALVANISED	TUBULAR			
46100725	HIGH STREET	Wroot Parish	471439.25	403062.27	1	7000	00189201	29/11/2018 00:00	6	3	LESS THAN 30MPH	ON POLE	300	SINGLE ARM	DARK GREY	POLE MOUNTED	URBIS	AXIA 2 S1	WOODEN PO	WOOD	5	PAINTED	PUDSEY DIAMOND			
46100725	HIGH STREET	Wroot Parish	471384.65	403393.95	10	7009	00189210	01/04/1993 00:00	6	3	LESS THAN 30MPH	BACK OF FOOTPATH	300	SINGLE ARM	NOT APPLICABLE	RIGID COLUMN	URBIS	AXIA 2 S1	PETITJEAN	SHEET STEEL	5	GALVANISED	DAER			
46100725	HIGH STREET	Wroot Parish	471353.44	403424.75	11	7010	00189211	01/04/1993 00:00	6	3	LESS THAN 30MPH	VERGE	300	SINGLE ARM	NOT APPLICABLE	RIGID COLUMN	URBIS	AXIA 2 S1	PETITJEAN	SHEET STEEL	5	GALVANISED	DAER			
46100725	HIGH STREET	Wroot Parish	471307.48	403444.74	12	7011	00189212	29/11/2018 00:00	6	3	LESS THAN 30MPH	ON POLE	300	SINGLE ARM	DARK GREY	POLE MOUNTED	URBIS	AXIA 2 S1	WOODEN PO	WOOD	5	PAINTED	PUDSEY DIAMOND			
46100725	HIGH STREET	Wroot Parish	471256.77	403465.22	13	7012	00189213	29/11/2018 00:00	6	3	LESS THAN 30MPH	ON POLE	300	SINGLE ARM	DARK GREY	POLE MOUNTED	URBIS	AXIA 2 S1	WOODEN PO	WOOD	5	PAINTED	PUDSEY DIAMOND			
46100725	HIGH STREET	Wroot Parish	471204.48	403493.76	14	7013	00189214	01/04/1993 00:00	6	3	LESS THAN 30MPH	VERGE	300	SINGLE ARM	NOT APPLICABLE	RIGID COLUMN	URBIS	AXIA 2 S1	PETITJEAN	SHEET STEEL	5	GALVANISED	DAER			
46100725	HIGH STREET	Wroot Parish	471153.39	403498.55	15	7014	00189215	29/11/2018 00:00	6	3	LESS THAN 30MPH	ON POLE	300	SINGLE ARM	DARK GREY	POLE MOUNTED	URBIS	AXIA 2 S1	WOODEN PO	WOOD	5	PAINTED	PUDSEY DIAMOND			
46100725	HIGH STREET	Wroot Parish	471100.93	403510.5	16	7015	00189216	29/11/2018 00:00	6	3	LESS THAN 30MPH	ON POLE	300	SINGLE ARM	DARK GREY	POLE MOUNTED	URBIS	AXIA 2 S1	WOODEN PO	WOOD	5	PAINTED	PUDSEY DIAMOND			
46100725	HIGH STREET	Wroot Parish	471053.68	403513.08	17	7016	00189217	29/11/2018 00:00	6	3	LESS THAN 30MPH	ON POLE	300	SINGLE ARM	DARK GREY	POLE MOUNTED	URBIS	AXIA 2 S1	WOODEN PO	WOOD	5	PAINTED	PUDSEY DIAMOND			
46100725	HIGH STREET	Wroot Parish	471025.58	403513.39	18	7017	00189218	29/11/2018 00:00	6	3	LESS THAN 30MPH	ON POLE	300	SINGLE ARM	DARK GREY	POLE MOUNTED	URBIS	AXIA 2 S1	WOODEN PO	WOOD	5	PAINTED	PUDSEY DIAMOND			
46100725	HIGH STREET	Wroot Parish	470986.85	403515.44	19	7018	00189219	30/11/2018 00:00	6	3	LESS THAN 30MPH	ON POLE	300	SINGLE ARM	DARK GREY	POLE MOUNTED	URBIS	AXIA 2 S1	WOODEN PO	WOOD	5	PAINTED	PUDSEY DIAMOND			
46100725	HIGH STREET	Wroot Parish	471413.85	403085.75	2	7001	00189202	01/04/1993 00:00	6	3	LESS THAN 30MPH	BACK OF FOOTPATH	300	SINGLE ARM	NOT APPLICABLE	RIGID COLUMN	URBIS	AXIA 2 S1	PETITJEAN	SHEET STEEL	5	GALVANISED	DAER			
46100725	HIGH STREET	Wroot Parish	470927.91	403518.08	20	7019	00189220	30/11/2018 00:00	6	3	LESS THAN 30MPH	ON POLE	300	SINGLE ARM	DARK GREY	POLE MOUNTED	URBIS	AXIA 2 S1	WOODEN PO	WOOD	5	PAINTED	PUDSEY DIAMOND			
46100725	HIGH STREET	Wroot Parish	470896.73	403529.84	21	7020	00189221	01/04/1993 00:00	6	3	LESS THAN 30MPH	VERGE	300	SINGLE ARM	NOT APPLICABLE	RIGID COLUMN	URBIS	AXIA 2 S1	PETITJEAN	SHEET STEEL	5	GALVANISED	DAER			
46100725	HIGH STREET	Wroot Parish	470856.77	403528.18	22	7021	00189222	01/04/1993 00:00	6	3	LESS THAN 30MPH	VERGE	300	SINGLE ARM	NOT APPLICABLE	RIGID COLUMN	URBIS	AXIA 2 S1	PETITJEAN	SHEET STEEL	5	GALVANISED	DAER			
46100725	HIGH STREET	Wroot Parish	470822.8	403518	23	7022	00189223	01/04/1993 00:00	6	3	LESS THAN 30MPH	VERGE	300	SINGLE ARM	NOT APPLICABLE	RIGID COLUMN	URBIS	AXIA 2 S1	PETITJEAN	SHEET STEEL	5	GALVANISED	DAER			
46100725	HIGH STREET	Wroot Parish	470798.06	403504.98	24	7023	00189224	01/04/1993 00:00	6	3	LESS THAN 30MPH	VERGE	300	SINGLE ARM	NOT APPLICABLE	RIGID COLUMN	URBIS	AXIA 2 S1	PETITJEAN	SHEET STEEL	5	GALVANISED	DAER			
46100725	HIGH STREET	Wroot Parish	470767.05	403478.32	25	7024	00189225	30/11/2018 00:00	6	3	LESS THAN 30MPH	ON POLE	300	S

46100749	HOOD ROAD	Scunthorpe	487634.62	408871.46	1	7000	00189391	01/04/2008 00:00	5	2	LESS THAN 30MPH	BACK OF FOOTPATH	0	POST TOP	NOT APPLICABLE	RIGID COLUMN	URBIS	AXIA 2 S1	VALMONT ST	TUBULAR STEEL	6	GALVANISED	TUBULAR
46100749	HOOD ROAD	Scunthorpe	487666.49	408866.9	2	7001	00189392	01/04/2008 00:00	5	2	LESS THAN 30MPH	VERGE	0	POST TOP	NOT APPLICABLE	RIGID COLUMN	URBIS	AXIA 2 S1	VALMONT ST	TUBULAR STEEL	6	GALVANISED	TUBULAR
46100749	HOOD ROAD	Scunthorpe	487687.87	408868.83	3	7002	00189393	01/04/2008 00:00	5	2	LESS THAN 30MPH	BACK OF FOOTPATH	0	POST TOP	NOT APPLICABLE	RIGID COLUMN	URBIS	AXIA 2 S1	VALMONT ST	TUBULAR STEEL	6	GALVANISED	TUBULAR
46100749	HOOD ROAD	Scunthorpe	487699.61	408861.1	4	7003	00189394	01/04/2010 00:00	5	2	NOT ON A ROAD	BACK OF FOOTPATH	0	POST TOP	NOT APPLICABLE	MID HINGED	URBIS	AXIA 2 S1	VALMONT ST	SHEET STEEL	5	GALVANISED	LEVEN
46100750	HOPFIELD	Hibaldstow Parish	498098.68	402645.64	1	7000	00189395	01/04/1980 00:00	1	4	LESS THAN 30MPH	VERGE	0	POST TOP	LIGHT GREY	RIGID COLUMN	URBIS	AXIA 2 S1	PETITJEAN	SHEET STEEL	5	PAINTED	NIDD
46100750	HOPFIELD	Hibaldstow Parish	498114.74	402401.74	10	7009	00189404	01/04/1992 00:00	1	4	LESS THAN 30MPH	BACK OF FOOTPATH	0	POST TOP	NOT APPLICABLE	RIGID COLUMN	URBIS	AXIA 2 S1	PETITJEAN	SHEET STEEL	5	GALVANISED	NIDD
46100750	HOPFIELD	Hibaldstow Parish	498102.77	402375.77	11	7010	00189405	01/04/1999 00:00	1	4	LESS THAN 30MPH	BACK OF FOOTPATH	0	POST TOP	NOT APPLICABLE	RIGID COLUMN	URBIS	AXIA 2 S1	PETITJEAN	SHEET STEEL	5	GALVANISED	NIDD
46100750	HOPFIELD	Hibaldstow Parish	498103.91	402348.84	12	7011	00189406	01/04/1992 00:00	1	4	LESS THAN 30MPH	BACK OF FOOTPATH	0	POST TOP	NOT APPLICABLE	RIGID COLUMN	URBIS	AXIA 2 S1	PETITJEAN	SHEET STEEL	5	GALVANISED	NIDD
46100750	HOPFIELD	Hibaldstow Parish	498095.01	402319.41	13	7012	00189407	01/04/1999 00:00	1	4	LESS THAN 30MPH	BACK OF FOOTPATH	0	POST TOP	NOT APPLICABLE	RIGID COLUMN	URBIS	AXIA 2 S1	PETITJEAN	SHEET STEEL	5	GALVANISED	NIDD
46100750	HOPFIELD	Hibaldstow Parish	498103.43	402296.34	14	7013	00189408	01/04/1999 00:00	1	4	LESS THAN 30MPH	BACK OF FOOTPATH	0	POST TOP	NOT APPLICABLE	RIGID COLUMN	URBIS	AXIA 2 S1	PETITJEAN	SHEET STEEL	5	GALVANISED	NIDD
46100750	HOPFIELD	Hibaldstow Parish	498128.7	402279.34	15	7014	00189409	01/04/1999 00:00	1	4	LESS THAN 30MPH	BACK OF FOOTPATH	0	POST TOP	NOT APPLICABLE	RIGID COLUMN	URBIS	AXIA 2 S1	PETITJEAN	SHEET STEEL	5	GALVANISED	NIDD
46100750	HOPFIELD	Hibaldstow Parish	498145.15	402260.18	16	7015	00189410	01/04/1999 00:00	1	4	LESS THAN 30MPH	BACK OF FOOTPATH	0	POST TOP	NOT APPLICABLE	RIGID COLUMN	URBIS	AXIA 2 S1	PETITJEAN	SHEET STEEL	5	GALVANISED	NIDD
46100750	HOPFIELD	Hibaldstow Parish	498177.11	402264.15	17	7016	00189411	01/04/1999 00:00	1	4	LESS THAN 30MPH	BACK OF FOOTPATH	0	POST TOP	NOT APPLICABLE	RIGID COLUMN	URBIS	AXIA 2 S1	PETITJEAN	SHEET STEEL	5	GALVANISED	NIDD
46100750	HOPFIELD	Hibaldstow Parish	498100.98	402616.66	2	7001	00189396	01/04/1980 00:00	1	4	LESS THAN 30MPH	VERGE	0	POST TOP	LIGHT GREY	RIGID COLUMN	URBIS	AXIA 2 S1	PETITJEAN	SHEET STEEL	5	PAINTED	NIDD
46100750	HOPFIELD	Hibaldstow Parish	498094.91	402597.61	3	7002	00189397	01/04/1980 00:00	1	4	LESS THAN 30MPH	VERGE	0	POST TOP	LIGHT GREY	RIGID COLUMN	URBIS	AXIA 2 S1	PETITJEAN	SHEET STEEL	5	PAINTED	NIDD
46100750	HOPFIELD	Hibaldstow Parish	498102.35	402582.05	4	7003	00189398	01/04/1980 00:00	1	4	LESS THAN 30MPH	VERGE	0	POST TOP	LIGHT GREY	RIGID COLUMN	URBIS	AXIA 2 S1	PETITJEAN	SHEET STEEL	5	PAINTED	NIDD
46100750	HOPFIELD	Hibaldstow Parish	498094.28	402554.65	5	7004	00189399	01/04/1980 00:00	1	4	LESS THAN 30MPH	BACK OF FOOTPATH	0	POST TOP	LIGHT GREY	RIGID COLUMN	URBIS	AXIA 2 S1	PETITJEAN	SHEET STEEL	5	PAINTED	NIDD
46100750	HOPFIELD	Hibaldstow Parish	498097.23	402509.19	6	7005	00189400	01/04/1980 00:00	1	4	LESS THAN 30MPH	FRONT OF FOOTPATH	0	POST TOP	LIGHT GREY	RIGID COLUMN	URBIS	AXIA 2 S1	PETITJEAN	SHEET STEEL	5	PAINTED	NIDD
46100750	HOPFIELD	Hibaldstow Parish	498108.21	402489.22	7	7006	00189401	01/04/1980 00:00	1	4	LESS THAN 30MPH	VERGE	0	POST TOP	LIGHT GREY	RIGID COLUMN	URBIS	AXIA 2 S1	PETITJEAN	SHEET STEEL	5	PAINTED	NIDD
46100750	HOPFIELD	Hibaldstow Parish	498110.39	402457.23	8	7007	00189402	01/12/2017 00:00	1	4	LESS THAN 30MPH	FRONT OF FOOTPATH	0	POST TOP	NOT APPLICABLE	RIGID COLUMN	URBIS	AXIA 2 S1	VALMONT ST	TUBULAR STEEL	6	GALVANISED	TUBULAR
46100750	HOPFIELD	Hibaldstow Parish	498113.7	402430.01	9	7008	00189403	01/04/1999 00:00	1	4	LESS THAN 30MPH	BACK OF FOOTPATH	0	POST TOP	NOT APPLICABLE	RIGID COLUMN	URBIS	AXIA 2 S1	PETITJEAN	SHEET STEEL	5	GALVANISED	NIDD
46100751	HOPKINS AVENUE	Scunthorpe	489125	409309.6	1	7000	00189412	01/04/2015 00:00	5	4	LESS THAN 30MPH	VERGE	0	POST TOP	NOT APPLICABLE	RIGID COLUMN	PHILIPS	STELA LONG 10 LED	MALLATITE	TUBULAR STEEL	6	GALVANISED	TUBULAR
46100751	HOPKINS AVENUE	Scunthorpe	489095.37	409301.61	2	7001	00189413	01/04/2015 00:00	5	4	LESS THAN 30MPH	VERGE	0	POST TOP	NOT APPLICABLE	RIGID COLUMN	PHILIPS	STELA LONG 10 LED	MALLATITE	TUBULAR STEEL	6	GALVANISED	TUBULAR
46100751	HOPKINS AVENUE	Scunthorpe	489061.17	409299.23	3	7002	00189414	01/04/2015 00:00	5	4	LESS THAN 30MPH	VERGE	0	POST TOP	NOT APPLICABLE	RIGID COLUMN	PHILIPS	STELA LONG 10 LED	MALLATITE	TUBULAR STEEL	6	GALVANISED	TUBULAR
46100751	HOPKINS AVENUE	Scunthorpe	489033.64	409283.68	4	7003	00189415	01/04/2015 00:00	5	4	LESS THAN 30MPH	VERGE	0	POST TOP	NOT APPLICABLE	RIGID COLUMN	PHILIPS	STELA LONG 10 LED	MALLATITE	TUBULAR STEEL	6	GALVANISED	TUBULAR
46100751	HOPKINS AVENUE	Scunthorpe	489001.2	409282.1	5	7004	00189416	01/04/2015 00:00	5	4	LESS THAN 30MPH	VERGE	0	POST TOP	NOT APPLICABLE	RIGID COLUMN	PHILIPS	STELA LONG 10 LED	MALLATITE	TUBULAR STEEL	6	GALVANISED	TUBULAR
46100753	HORKSTOW ROAD	South Ferriby Parish	498757.79	420804.38	1	7000	00189417	01/04/1996 00:00	6	3	LESS THAN 30MPH	BACK OF FOOTPATH	0	POST TOP	NOT APPLICABLE	RIGID COLUMN	URBIS	AXIA 2 S1	PETITJEAN	TUBULAR STEEL	5	GALVANISED	STEPPED TUBULAR
46100753	HORKSTOW ROAD	South Ferriby Parish	498651.8	420524.9	10	7009	00189426	01/04/1973 00:00	6	3	LESS THAN 30MPH	VERGE	500	SINGLE ARM	MID GREY	RIGID COLUMN	URBIS	AXIA 2 S1	PETITJEAN	SHEET STEEL	5	PAINTED	DAER
46100753	HORKSTOW ROAD	South Ferriby Parish	498641.63	420488.3	11FP	7010	00189427	01/04/1984 00:00	6	3	LESS THAN 30MPH	VERGE	0	POST TOP	NOT APPLICABLE	RIGID COLUMN	URBIS	AXIA 2 S1	PETITJEAN	SHEET STEEL	5	GALVANISED	DAER
46100753	HORKSTOW ROAD	South Ferriby Parish	498634.83	420458.33	12	7011	00189428	01/04/1973 00:00	6	3	LESS THAN 30MPH	VERGE	500	SINGLE ARM	MID GREY	RIGID COLUMN	URBIS	AXIA 2 S1	PETITJEAN	SHEET STEEL	5	PAINTED	DAER
46100753	HORKSTOW ROAD	South Ferriby Parish	498632.15	420409.78	13	7012	00189429	01/04/1973 00:00	6	3	LESS THAN 30MPH	VERGE	500	SINGLE ARM	DARK GREY	RIGID COLUMN	URBIS	AXIA 2 S1	PETITJEAN	SHEET STEEL	5	PAINTED	DAER
46100753	HORKSTOW ROAD	South Ferriby Parish	498638.19	420370.26	14	7013	00189430	01/04/1973 00:00	6	3	LESS THAN 30MPH	VERGE	500	SINGLE ARM	DARK GREY	RIGID COLUMN	URBIS	AXIA 2 S1	PETITJEAN	SHEET STEEL	5	PAINTED	DAER
46100753	HORKSTOW ROAD	South Ferriby Parish	498647.34	420325.53	15	7014	00189431	01/04/1973 00:00	6	3	LESS THAN 30MPH	VERGE	500	SINGLE ARM	DARK GREY	RIGID COLUMN	URBIS	AXIA 2 S1	PETITJEAN	SHEET STEEL	5	PAINTED	DAER
46100753	HORKSTOW ROAD	South Ferriby Parish	498662.66	420282.7	16	7015	00189432	01/04/1973 00:00	6	3	LESS THAN 30MPH	BACK OF FOOTPATH	500	SINGLE ARM	DARK GREY	RIGID COLUMN	URBIS	AXIA 2 S1	PETITJEAN	SHEET STEEL	5	PAINTED	DAER
46100753	HORKSTOW ROAD	South Ferriby Parish	498660.74	420236.15	17	7016	00189433	01/04/1973 00:00	6	3	LESS THAN 30MPH	VERGE	500	SINGLE ARM	DARK GREY	RIGID COLUMN	URBIS	AXIA 2 S1	PETITJEAN	SHEET STEEL	5	PAINTED	DAER
46100753	HORKSTOW ROAD	South Ferriby Parish	498654.73	420194.61	18	7017	00189434	01/04/1973 00:00	6	3	LESS THAN 30MPH	ON POLE	500	SINGLE ARM	NOT APPLICABLE	POLE MOUNTED	URBIS	AXIA 2 S1	WOODEN PO	WOOD	4	NOT APPLICABI	Not Applicable
46100753	HORKSTOW ROAD	South Ferriby Parish	498633.9	420145.9	19	7018	00189435	01/04/1973 00:00	6	3	LESS THAN 30MPH	ON POLE	500	SINGLE ARM	NOT APPLICABLE	POLE MOUNTED	URBIS	AXIA 2 S1	WOODEN PO	WOOD	4	NOT APPLICABI	Not Applicable
46100753	HORKSTOW ROAD	South Ferriby Parish	498747.07	420767.51	2	7001	00189418	01/04/1996 00:00	6	3	LESS THAN 30MPH	BACK OF FOOTPATH	0	POST TOP	NOT APPLICABLE	RIGID COLUMN	URBIS	AXIA 2 S1	PETITJEAN	TUBULAR STEEL	5	GALVANISED	STEPPED TUBULAR
46100753	HORKSTOW ROAD	South Ferriby Parish	498616.54	420102.7	20	7019	00189436	01/04/1984 00:00	6	3	LESS THAN 30MPH	ON POLE	300	SINGLE ARM	NOT APPLICABLE	POLE MOUNTED	URBIS	AXIA 2 S1	WOODEN PO	WOOD	5	NOT APPLICABI	Not Applicable
46100753	HORKSTOW ROAD	South Ferriby Parish	498736.83	420735.09	3	7002	00189419	01/04/1996 00:00	6	3	LESS THAN 30MPH	BACK OF FOOTPATH	300	SINGLE ARM	NOT APPLICABLE	RIGID COLUMN	URBIS	AXIA 2 S1	PETITJEAN	TUBULAR STEEL	5	GALVANISED	STEPPED TUBULAR
46100753	HORKSTOW ROAD	South Ferriby Parish	498724.59	420711.24	4	7003	00189420	01/04/1996 00:00	6	3	LESS THAN 30MPH	BACK OF FOOTPATH	300	SINGLE ARM	NOT APPLICABLE	RIGID COLUMN	URBIS	AXIA 2 S1	PETITJEAN	TUBULAR STEEL	5	GALVANISED	STEPPED TUBULAR
46100753	HORKSTOW ROAD	South Ferriby Parish	498709	420686.37	5	7004	00189421	01/04/1996 00:00	6	3	LESS THAN 30MPH	BACK OF FOOTPATH	300	SINGLE ARM	NOT APPLICABLE	RIGID COLUMN	URBIS	AXIA 2 S1	PETITJEAN	TUBULAR STEEL	5	GALVANISED	STEPPED TUBULAR
46100753	HORKSTOW ROAD	South Ferriby Parish	498696.24	420659.27	6	7005	00189422	01/04/1996 00:00	6	3	LESS THAN 30MPH	BACK OF FOOTPATH	300	SINGLE ARM	NOT APPLICABLE	RIGID COLUMN	URBIS	AXIA 2 S1	PETITJEAN	TUBULAR STEEL	5	GALVANISED	STEPPED TUBULAR
46100753	HORKSTOW ROAD	South Ferriby Parish	498683.71	420627.99	7	7006	00189423	01/04/1996 00:00	6	3	LESS THAN 30MPH	BACK OF FOOTPATH	300	SINGLE ARM	NOT APPLICABLE	RIGID COLUMN	URBIS	AXIA 2 S1	PETITJEAN	TUBULAR STEEL	5	GALVANISED	STEPPED TUBULAR
46100753	HORKSTOW ROAD	South Ferriby Parish	498673.19	420595.52	8	7007	00189424	01/04/1996 00:00	6	3	LESS THAN 30MPH	BACK OF FOOTPATH	300	SINGLE ARM	NOT APPLICABLE	RIGID COLUMN	URBIS	AXIA 2 S1	T AND L	TUBULAR STEEL	5	GALVANISED	STEPPED TUBULAR
46100753	HORKSTOW ROAD	South Ferriby Parish	498662.52	420558.72	9	7008	00189425	01/04/1973 00:00	6	3	LESS THAN 30MPH	VERGE	500	SINGLE ARM	MID GREY	RIGID COLUMN	URBIS	AXIA 2 S1	PETITJEAN	SHEET STEEL	5	PAINTED	DAER
46100754	HORNBEAM AVENUE	Scunthorpe	489305.52	407881.99	1	7000	00189437	01/04/2013 00:00	1	3	LESS THAN 30MPH	BACK OF FOOTPATH	0	POST TOP	NOT APPLICABLE	RIGID COLUMN	URBIS	AXIA 2 S1	MALLATITE	TUBULAR STEEL	6	GALVANISED	TUBULAR
46100754	HORNBEAM AVENUE	Scunthorpe	489255.36	407969.48	10	7009	00189446	01/09/2010 00:00	1	3	LESS THAN 30MPH	BACK OF FOOTPATH	0	POST TOP	NOT APPLICABLE	RIGID COLUMN	URBIS	AXIA 2 S1	MALLATITE	TUBULAR STEEL	6	GALVANISED	TUBULAR
46100754	HORNBEAM AVENUE	Scunthorpe	489207.59	407991.79	11	7010	00189447	01/09/2010 00:00	1	3	LESS THAN 30MPH	BACK OF FOOTPATH	0	POST TOP	NOT APPLICABLE	RIGID COLUMN	URBIS	AXIA 2 S1	MALLATITE	TUBULAR STEEL	6	GALVANISED	TUBULAR
46100754	HORNBEAM AVENUE	Scunthorpe	489215.31	408018.55	12	7011	00189448	01/09/2010 00:00	1	3	LESS THAN 30MPH	BACK OF FOOTPATH	0	POST TOP	NOT APPLICABLE	RIGID COLUMN	URBIS	AXIA 2 S1	MALLATITE	TUBULAR STEEL	6	GALVANISED	TUBULAR
46100754	HORNBEAM AVENUE	Scunthorpe	489236.5	408043.69	13	7012	00189449	01/09/2010 00:00	1	3	LESS THAN 30MPH	BACK OF FOOTPATH	0	POST TOP	NOT APPLICABLE	RIGID COLUMN	URBIS	AXIA 2 S1	MALLATITE	TUBULAR STEEL	6	GALVANISED	TUBULAR
46100754	HORNBEAM AVENUE	Scunthorpe	489241.65	408022.34	14	7013	00189450	01/04/1985 00:00	1	3	LESS THAN 30MPH	BACK OF FOOTPATH	300	SINGLE ARM	NOT APPLICABLE	RIGID COLUMN	URBIS	AXIA 2 S1	PETITJEAN	SHEET STEEL	5	GALVANISED	DAER
46100754	HORNBEAM AVENUE	Scunthorpe	489269	407894.11	2	7001	00189438	17/01/2020 00:00	1	3	LESS THAN 30MPH	BACK OF FOOTPATH	0	POST TOP	NOT APPLICABLE	RIGID COLUMN	URBIS	AXIA 2 S1	MALLATITE	TUBULAR STEEL	6	GALVANISED	TUBULAR
46100754	HORNBEAM AVENUE	Scunthorpe	489237.97	407891.93	3	7002	00189439	17/01/2020 00:00	1	3	LESS THAN 30MPH	BACK OF FOOTPATH	0	POST TOP	NOT APPLICABLE	RIGID COLUMN	URBIS	AXIA 2 S1	MALLATITE	TUBULAR STEEL	6	GALVANISED	TUBULAR
46100754	HORNBEAM AVENUE	Scunthorpe	489225.65	407860.97	4	7003	00189440	02/11/2022 00:00	1	3	LESS THAN 30MPH	BACK OF FOOTPATH	0	POST TOP	NOT APPLICABLE	RIGID COLUMN	URBIS	AXIA 2 S1	MALLATITE	TUBULAR STEEL	6	GALVANISED	TUBULAR
46100754	HORNBEAM AVENUE	Scunthorpe	489213.3	407883.09	5	7004	00189441	17/01/2020 00:00	1	3	LESS THAN 30MPH	BACK OF FOOTPATH	0	POST TOP	NOT APPLICABLE	RIGID COLUMN	URBIS	AXIA 2 S1	MALLATITE	TUBULAR STEEL	6	GALVANISED	TUBULAR
46100754	HORNBEAM AVENUE	Scunthorpe	489222.63	407911.01	6	7005	00189442	17/01/2020 00:00	1	3	LESS THAN 30MPH	BACK OF FOOTPATH	0	POST TOP	NOT APPLICABLE	RIGID COLUMN	URBIS	AXIA 2 S1	MALLATITE	TUBULAR STEEL	6	GALVANISED	MALLATITE
46100754	HORNBEAM AVENUE	Scunthorpe	489210.43	407939.47	7	7006	00189443	01/09/2010 00:00	1	3	LESS THAN 30MPH	BACK OF FOOTPATH	0	POST TOP	NOT APPLICABLE	RIGID COLUMN	URBIS	AXIA 2 S1	MALLATITE	TUBULAR STEEL	6	GALVANISED	TUBULAR
46100754	HORNBEAM AVENUE	Scunthorpe	489208.89	407964.24	8	7007	00189444	01/09/2010 00:00	1	3	LESS THAN 30MPH	BACK OF FOOTPATH	0	POST TOP	NOT APPLICABLE	RIGID COLUMN	URBIS	AXIA 2 S1	MALLATITE	TUBULAR STEEL	6	GALVANISED	TUBULAR
46100754	HORNBEAM AVENUE	Scunthorpe	489227.66	407971.7	9	7008	00189445	01/09/2010 00:00	1	3	LESS THAN 30MPH	BACK OF FOOTPATH	0	POST TOP	NOT APPLICABLE	RIGID COLUMN	URBIS	AXIA 2 S1	MALLATITE	TUBULAR STEEL	6	GALVANISED	TUBULAR
46100755	HORNSBY CRESCENT	Scunthorpe	488778.22	412040.08	1	7000	00189451	01/04/1993 00:00	6	3	LESS THAN 30MPH	FRONT OF FOOTPATH	300	SINGLE ARM	NOT APPLICABLE	RIGID COLUMN	URBIS	AXIA 2 S1	PETITJEAN	SHEET STEEL	5	GALVANISED	DAER
46100755	HORNSBY CRESCENT	Scunthorpe	488609.06	411998.77	10	7009	00189460	01/04/1993 00:00	6	3	LESS THAN 30MPH	FRONT OF FOOTPATH	300	SINGLE ARM	NOT APPLICABLE	RIGID COLUMN	URBIS	AXIA 2 S1	PETITJEAN	SHEET STEEL	5	GALVANISED	DAER
46100755	HORNSBY CRESCENT	Scunthorpe	488583.46	412000.91	11	7010	00189461	01/04/1993 00:00	6	3	LESS THAN 30MPH	VERGE	300	SINGLE ARM	NOT APPLICABLE	RIGID COLUMN	URBIS	AXIA 2 S1	PETITJEAN	SHEET STEEL	5	GALVANISED	DAER
46100755	HORNSBY CRESCENT	Scunthorpe	488753.22	412043.27	2	7001	00189452	01/04/1993 00:00	6	3	LESS THAN 30MPH	FRONT OF FOOTPATH	300	SINGLE ARM	NOT APPLICABLE	RIGID COLUMN	URBIS	AXIA 2 S1	PETITJEAN	SHEET STEEL	5	GALVANISED	DAER
46100755	HORNSBY CRESCENT	Scunthorpe	488738.33	412039.28	3	7002	00189453	01/04/1993 00:00	6	3	LESS THAN 30MPH	FRONT OF FOOTPATH	300	SINGLE ARM	NOT APPLICABLE	RIGID COLUMN	URBIS	AXIA 2 S1	PETITJEAN	SHEET STEEL	5	GALVANISED	DAER
46100755	HORNSBY CRESCENT	Scunthorpe	488724.2	412027.21	4	7003	00189454	01/04/1993 00:00	6	3	LESS THAN 30MPH	FRONT OF FOOTPATH	300	SINGLE ARM	NOT APPLICABLE	RIGID COLUMN	URBIS	AXIA 2 S1	PETITJEAN	SHEET STEEL	5	GALVANISED	DAER
46100755	HORNSBY CRESCENT	Scunthorpe	488699.83	412019.43	5	7004	00189455	01/04/1993 00:00	6	3	LESS THAN 30MPH	BACK OF FOOTPATH	800	SINGLE ARM	NOT APPLICABLE	RIGID COLUMN	URBIS	AXIA 2 S1	PETITJEAN	SHEET STEEL	5	GALVANISED	DAER
46100755	HORNSBY CRESCENT	Scunthorpe	488678.56	412014.11	6	7005	00189456	01/04/1993 00:00	6	3	LESS THAN 30MPH	BACK OF FOOTPATH	800	SINGLE ARM	NOT APPLICABLE	RIGID COLUMN	URBIS	AXIA 2 S1	PETITJEAN	SHEET STEEL	5	GALVANISED	DAER
46100755	HORNSBY CRESCENT	Scunthorpe	488662.46	412010.57	7	7006	00189457	01/04/1993 00:00	6	3	LESS THAN 30MPH	BACK OF FOOTPATH	800	SINGLE ARM	NOT APPLICABLE	RIGID COLUMN	URBIS	AXIA 2 S1	PETITJEAN	SHEET STEEL	5	GALVANISED	DAER
46100755	HORNSBY CRESCENT	Scunthorpe	488638.26	412006.31	8	7007	00189458	01/04/1993 00:00	6	3	LESS THAN 30MPH	FRONT OF FOOTPATH	300	SINGLE ARM	NOT APPLICABLE	RIGID COLUMN	URBIS	AXIA 2 S1	PETITJEAN	SHEET STEEL	5	GALVANISED	DAER
46100755	HORNSBY CRESCENT	Scunthorpe	488619.43	412011.53	9	7008	00189459	01/04/1993 00:00	6	3	LESS THAN 30MPH	BACK OF FOOTPATH	800	SINGLE ARM	NOT APPLICABLE	RIGID COLUMN	URBIS	AXIA 2 S1	PETITJEAN	SHEET STEEL	5	GALVANISED	DAER
46100756	HORSEGATE FIELD ROAD	Goxhill Parish	510607.91	421549.6	1	7000	00189462	01/04/1973 00:00	4	4	LESS THAN 30MPH	BACK OF FOOTPATH	800	SINGLE ARM	MID GREY	RIGID COLUMN	URBIS	AXIA 2 S1	PETITJEAN	SHEET STEEL	6	PAINTED	DAER
46100756	HORSEGATE FIELD ROAD	Goxhill Parish	510643.6	421572.83	2	7001	00189463	01/04/1973 00:00	4	4	LESS THAN 30MPH	BACK OF FOOTPATH	800	SINGLE ARM	MID GREY	RIGID COLUMN	URBIS	AXIA 2 S1	PETITJEAN	SHEET STEEL	6	PAINTED	DAER
46100756	HORSEGATE FIELD ROAD	Goxhill Parish	510672.2	421592.13	3	7002	00189464	01/04/1993 00:00	4	4	LESS THAN 30MPH	BACK OF FOOTPATH	800	SINGLE ARM	MID GREY	RIGID COLUMN	URBIS	AXIA 2 S1	PETITJEAN	SHEET STEEL	6	PAINTED	DAER
46100756	HORSEGATE FIELD ROAD	Goxhill Parish	510703.81	421621.1	4	7003	00189465	01/04/1973 00:00	4	4	LESS THAN 30MPH	BACK OF FOOTPATH	800	SINGLE ARM	MID GREY	RIGID COLUMN	URBIS	AXIA 2 S1	PETITJEAN	SHEET STEEL	6	PAINTED	DAER
46100756	HORSEGATE FIELD ROAD	Goxhill Parish	510724.71	421649.62	5	7004	00189466	01/04/1985 00:00	4	4	LESS THAN 30MPH	BACK OF FOOTPATH	800	SINGLE ARM	MID GREY	RIGID COLUMN	URBIS	AXIA 2 S1	PETITJEAN	SHEET STEEL	6	PAINTED	DAER
46100756	HORSEGATE FIELD ROAD	Goxhill Parish	510737.59	421679.68	6	7005	00189467	01/04/1985 00:00	4	4	LESS THAN 30MPH	BACK OF FOOTPATH	800	SINGLE ARM	MID GREY	RIGID COLUMN	URBIS	AXIA 2 S1	PETITJEAN	SHEET STEEL	6	PAINTED	DAER
46100756	HORSEGATE FIELD ROAD	Goxhill Parish	510753.74	421703.1	7	7006	00189468	01/04/1985 00:00	4	4	LESS THAN 30MPH	VERGE	800	SINGLE ARM	MID GREY	RIGID COLUMN	URBIS	AXIA 2 S1	PETITJEAN	SHEET STEEL	6	PAINTED	DAER
46100757	HOWDENS HILL	Scunthorpe	489197.96	410791.23	1	7000	00189469	01/04/2004 00:00	2	4	LESS THAN 30MPH	CENTRAL RESERVATION	800	DOUBLE ARM	NOT APPLICABLE	RIGID COLUMN	URBIS	AXIA 2 S1	PETITJEAN	SHEET STEEL	8	GALVANISED	THAMES
46100757	HOWDENS HILL	Scunthorpe	489201.1	410758.19	2	7001	00189470	01/04/1975 00:00	2	4	LESS THAN 30MPH	CENTRAL RESERVATION	300	DOUBLE ARM	MID GREY	RIGID COLUMN	URBIS	AXIA 2 S1	S AND L	TUBULAR STEEL	8	PAINTED	OTHER
46100757	HOWDENS HILL	Scunthorpe	489206.25	410724.61	3	7002	00189471	01/04/2004 00:00	2	4	LESS THAN 30MPH	CENTRAL RESERVATION	1000	DOUBLE ARM	NOT APPLICABLE	RIGID COLUMN	URBIS	AXIA 2 S1	PETITJEAN	SHEET STEEL	8	GALVANISED	THAMES
46100757	HOWDENS HILL	Scunthorpe	489213.98	410690.97	4	7003	00189472	23/09/2021 00:00	2	4	LESS THAN 30MPH	CENTRAL RESERVATION	1000	DOUBLE ARM	NOT APPLICABLE	RIGID COLUMN	URBIS	AXIA 2 S1	MALLATITE	TUBULAR STEEL	8	GALVANISED	TUBULAR
46100758	HOWE LANE	Goxhill Parish	509761.82	421269.11	1	7000	00189474	01/04/1973 00:00	4	4	LESS THAN 30MPH	BACK OF FOOTPATH	800	SINGLE ARM	MID GREY	RIGID COLUMN	URBIS	AXIA 2 S1	PETITJEAN	SHEET STEEL	6	PAINTED	DAER
46100758	HOWE LANE	Goxhill Parish	510108.75	421361.49	10	7009	00189483	01/04/1973 00:00	4	4	LESS THAN 30MPH	BACK OF FOOTPATH	800	SINGLE ARM	MID GREY	RIGID COLUMN	URBIS	AXIA 2 S1	PETITJEAN	SHEET STEEL	6	PAINTED	DAER
46100758	HOWE LANE	Goxhill Parish	510137	421365.06	11	7010	00189484	01/04/1973 00:00	4	4	LESS THAN 30MPH	BACK OF FOOTPATH	800	SINGLE ARM	MID GREY	RIGID COLUMN	URBIS	AXIA 2 S1	PETITJEAN	SHEET STEEL	6	PAINTED	DAER
46100758	HOWE LANE	Goxhill Parish	510170.61	421375.42	12	7011	00189485	01/04/1973 00:00	4	4	LESS THAN 30MPH	BACK OF FOOTPATH	800	SINGLE ARM	MID GREY	RIGID COLUMN	URBIS	AXIA 2 S1	PETITJEAN	SHEET STEEL	6	PAINTED	DAER
46100758	HOWE LANE	Goxhill Parish	510203.68	421380.68	13	7012	00189486	01/04/1973 00:00	4	4	LESS THAN 30MPH	BACK OF FOOTPATH	800	SINGLE ARM	MID GREY	RIGID COLUMN	URBIS	AXIA 2 S1	PETITJEAN	SHEET STEEL	6	PAINTED	DAER
46100758	HOWE LANE	Gox

46100783	JAMES STREET	Brigg Parish	499788.32	407053.1	2	7001	00189645	01/04/1980 00:00	2	3	LESS THAN 30MPH	BACK OF FOOTPATH	0	POST TOP	LIGHT GREY	RIGID COLUMN	URBIS	AXIA 2 S1	PETITJEAN	SHEET STEEL	5	PAINTED	NIDD
46100783	JAMES STREET	Brigg Parish	499800.41	407026.42	3	7002	00189646	01/04/1980 00:00	2	3	LESS THAN 30MPH	BACK OF FOOTPATH	0	POST TOP	LIGHT GREY	RIGID COLUMN	URBIS	AXIA 2 S1	PETITJEAN	SHEET STEEL	5	PAINTED	NIDD
46100785	JERICHO LANE	East Halton Parish	513592.38	420155.04	1	7000	00189647	01/04/1980 00:00	4	4	LESS THAN 30MPH	VERGE	500	SINGLE ARM	NOT APPLICABLE	POLE MOUNTED	URBIS	AXIA 2 S1	WOODEN PO	WOOD	5	NOT APPLICABI	Not Applicable
46100785	JERICHO LANE	East Halton Parish	513585.6	420201.75	2	7001	00189648	01/04/1980 00:00	4	4	LESS THAN 30MPH	VERGE	500	SINGLE ARM	NOT APPLICABLE	POLE MOUNTED	URBIS	AXIA 2 S1	WOODEN PO	WOOD	5	NOT APPLICABI	Not Applicable
46100785	JERICHO LANE	East Halton Parish	513577.66	420249.59	3	7002	00189649	01/04/1980 00:00	4	4	LESS THAN 30MPH	VERGE	500	SINGLE ARM	NOT APPLICABLE	POLE MOUNTED	URBIS	AXIA 2 S1	WOODEN PO	WOOD	5	NOT APPLICABI	Not Applicable
46100785	JERICHO LANE	East Halton Parish	513564.62	420296.94	4	7003	00189650	01/04/1980 00:00	4	4	LESS THAN 30MPH	VERGE	500	SINGLE ARM	NOT APPLICABLE	POLE MOUNTED	URBIS	AXIA 2 S1	WOODEN PO	WOOD	4	NOT APPLICABI	Not Applicable
46100785	JERICHO LANE	East Halton Parish	513561.2	420333.63	5	7004	00189651	01/04/1980 00:00	4	4	LESS THAN 30MPH	VERGE	500	SINGLE ARM	NOT APPLICABLE	POLE MOUNTED	URBIS	AXIA 2 S1	WOODEN PO	WOOD	5	NOT APPLICABI	Not Applicable
46100785	JERICHO LANE	East Halton Parish	513555.09	420384.11	6	7005	00189652	01/04/1980 00:00	4	4	LESS THAN 30MPH	VERGE	500	SINGLE ARM	NOT APPLICABLE	POLE MOUNTED	URBIS	AXIA 2 S1	WOODEN PO	WOOD	5	NOT APPLICABI	Not Applicable
46100786	JOHN HARRISONS CLOSE	Barrow upon Humber Parish	507286.83	421803.27	1	7000	00189653	09/01/2019 00:00	4	1	LESS THAN 30MPH	BACK OF FOOTPATH	0	POST TOP	NOT APPLICABLE	RIGID COLUMN	URBIS	AXIA 2 S1	MALLATITE	TUBULAR STEEL	6	GALVANISED	TUBULAR
46100786	JOHN HARRISONS CLOSE	Barrow upon Humber Parish	507274.09	421772.61	2	7001	00189654	01/04/2010 00:00	4	1	LESS THAN 30MPH	BACK OF FOOTPATH	0	POST TOP	NOT APPLICABLE	RIGID COLUMN	URBIS	AXIA 2 S1	MALLATITE	TUBULAR STEEL	6	GALVANISED	TUBULAR
46100788	JOHNSONS LANE	Crowle Parish	477264.39	412829.56	1	7000	00189655	01/04/2010 00:00	5	1	LESS THAN 30MPH	BACK OF FOOTPATH	500	SINGLE ARM	GRAPHITE GREY	RIGID COLUMN	HESS	CANTO	HESS	TUBULAR STEEL	5	PAINTED	CANTO
46100788	JOHNSONS LANE	Crowle Parish	477235.37	412819.06	2	7001	00189656	01/04/1986 00:00	5	1	LESS THAN 30MPH	VERGE	300	SINGLE ARM	NOT APPLICABLE	RIGID COLUMN	URBIS	AXIA 2 S1	PETITJEAN	SHEET STEEL	5	GALVANISED	DAER
46100788	JOHNSONS LANE	Crowle Parish	477199.02	412815.44	3	7002	00189657	01/04/1986 00:00	5	1	LESS THAN 30MPH	VERGE	300	SINGLE ARM	NOT APPLICABLE	RIGID COLUMN	URBIS	AXIA 2 S1	PETITJEAN	SHEET STEEL	5	GALVANISED	DAER
46100788	JOHNSONS LANE	Crowle Parish	477164.74	412820.12	4	7003	00189658	01/04/1986 00:00	5	1	LESS THAN 30MPH	VERGE	300	SINGLE ARM	NOT APPLICABLE	RIGID COLUMN	URBIS	AXIA 2 S1	PETITJEAN	SHEET STEEL	5	GALVANISED	DAER
46100788	JOHNSONS LANE	Crowle Parish	477135.16	412816.37	5	7004	00189659	01/04/1986 00:00	5	1	LESS THAN 30MPH	BACK OF FOOTPATH	300	SINGLE ARM	NOT APPLICABLE	RIGID COLUMN	URBIS	AXIA 2 S1	PETITJEAN	SHEET STEEL	5	GALVANISED	DAER
46100788	JOHNSONS LANE	Crowle Parish	477101.24	412811.71	6	7005	00189660	01/04/1986 00:00	5	1	LESS THAN 30MPH	VERGE	300	SINGLE ARM	NOT APPLICABLE	RIGID COLUMN	URBIS	AXIA 2 S1	PETITJEAN	SHEET STEEL	5	GALVANISED	DAER
46100788	JOHNSONS LANE	Crowle Parish	477073.01	412808.48	7	7006	00189661	01/04/1986 00:00	5	1	LESS THAN 30MPH	VERGE	300	SINGLE ARM	NOT APPLICABLE	RIGID COLUMN	URBIS	AXIA 2 S1	PETITJEAN	SHEET STEEL	5	GALVANISED	DAER
46100788	JOHNSONS LANE	Crowle Parish	477045.78	412805.03	8	7007	00189662	01/04/1986 00:00	5	1	LESS THAN 30MPH	VERGE	300	SINGLE ARM	NOT APPLICABLE	RIGID COLUMN	URBIS	AXIA 2 S1	PETITJEAN	SHEET STEEL	5	GALVANISED	DAER
46100788	JOHNSONS LANE	Crowle Parish	477007.1	412802.65	9	7008	00189663	01/04/1986 00:00	5	1	LESS THAN 30MPH	VERGE	300	SINGLE ARM	NOT APPLICABLE	RIGID COLUMN	URBIS	AXIA 2 S1	PETITJEAN	TUBULAR STEEL	5	GALVANISED	METRO
46100789	JONQUIL AVENUE	Scunthorpe	490827.9	408004.77	1	7000	00189664	01/04/1988 00:00	1	3	LESS THAN 30MPH	BACK OF FOOTPATH	0	POST TOP	LIGHT GREY	RIGID COLUMN	URBIS	AXIA 2 S1	PETITJEAN	SHEET STEEL	5	PAINTED	NIDD
46100789	JONQUIL AVENUE	Scunthorpe	490824.95	407976.68	2	7001	00189665	01/04/1988 00:00	1	3	LESS THAN 30MPH	VERGE	0	POST TOP	LIGHT GREY	RIGID COLUMN	URBIS	AXIA 2 S1	PETITJEAN	SHEET STEEL	5	PAINTED	NIDD
46100789	JONQUIL AVENUE	Scunthorpe	490838.5	407960.93	3	7002	00189666	01/04/1988 00:00	1	3	LESS THAN 30MPH	BACK OF FOOTPATH	0	POST TOP	LIGHT GREY	RIGID COLUMN	URBIS	AXIA 2 S1	PETITJEAN	SHEET STEEL	5	PAINTED	NIDD
46100789	JONQUIL AVENUE	Scunthorpe	490833.49	407940.1	4	7003	00189667	01/04/1988 00:00	1	3	LESS THAN 30MPH	FRONT OF FOOTPATH	0	POST TOP	LIGHT GREY	RIGID COLUMN	URBIS	AXIA 2 S1	PETITJEAN	SHEET STEEL	5	PAINTED	NIDD
46100789	JONQUIL AVENUE	Scunthorpe	490840.11	407913.32	5	7004	00189668	01/04/1988 00:00	1	3	LESS THAN 30MPH	BACK OF FOOTPATH	0	POST TOP	LIGHT GREY	RIGID COLUMN	URBIS	AXIA 2 S1	PETITJEAN	SHEET STEEL	5	PAINTED	NIDD
46100789	JONQUIL AVENUE	Scunthorpe	490856.81	407893.79	6	7005	00189669	01/04/1988 00:00	1	3	LESS THAN 30MPH	BACK OF FOOTPATH	0	POST TOP	LIGHT GREY	RIGID COLUMN	URBIS	AXIA 2 S1	PETITJEAN	SHEET STEEL	5	PAINTED	NIDD
46100789	JONQUIL AVENUE	Scunthorpe	490855.23	407873.94	7	7006	00189670	01/04/1988 00:00	1	3	LESS THAN 30MPH	BACK OF FOOTPATH	0	POST TOP	LIGHT GREY	RIGID COLUMN	URBIS	AXIA 2 S1	PETITJEAN	SHEET STEEL	5	PAINTED	NIDD
46100790	JUSTICE HALL LANE	Crowle Parish	477155.98	413271.09	1	7000	00189671	01/04/1993 00:00	5	1	LESS THAN 30MPH	VERGE	300	SINGLE ARM	NOT APPLICABLE	RIGID COLUMN	URBIS	AXIA 2 S1	PETITJEAN	SHEET STEEL	5	GALVANISED	DAER
46100790	JUSTICE HALL LANE	Crowle Parish	477124.19	413260.71	2	7001	00189672	01/04/1993 00:00	5	1	LESS THAN 30MPH	VERGE	300	SINGLE ARM	NOT APPLICABLE	RIGID COLUMN	URBIS	AXIA 2 S1	PETITJEAN	SHEET STEEL	5	GALVANISED	DAER
46100790	JUSTICE HALL LANE	Crowle Parish	477091.14	413250.91	3	7002	00189673	01/04/1993 00:00	5	1	LESS THAN 30MPH	VERGE	300	SINGLE ARM	NOT APPLICABLE	RIGID COLUMN	URBIS	AXIA 2 S1	PETITJEAN	SHEET STEEL	5	GALVANISED	DAER
46100790	JUSTICE HALL LANE	Crowle Parish	477061.85	413234.82	4	7003	00189674	01/04/1993 00:00	5	1	LESS THAN 30MPH	BACK OF FOOTPATH	300	SINGLE ARM	NOT APPLICABLE	RIGID COLUMN	URBIS	AXIA 2 S1	PETITJEAN	SHEET STEEL	5	GALVANISED	DAER
46100790	JUSTICE HALL LANE	Crowle Parish	477027.34	413222.24	5	7004	00189675	01/04/1993 00:00	5	1	LESS THAN 30MPH	BACK OF FOOTPATH	300	SINGLE ARM	NOT APPLICABLE	RIGID COLUMN	URBIS	AXIA 2 S1	PETITJEAN	SHEET STEEL	5	GALVANISED	DAER
46100790	JUSTICE HALL LANE	Crowle Parish	476982.69	413213.09	6	7005	00189676	01/04/1993 00:00	5	1	LESS THAN 30MPH	BACK OF FOOTPATH	300	SINGLE ARM	NOT APPLICABLE	RIGID COLUMN	URBIS	AXIA 2 S1	PETITJEAN	SHEET STEEL	5	GALVANISED	DAER
46100791	KATHLEEN AVENUE	Scunthorpe	490224.64	408518.15	1	7000	00189677	01/04/1980 00:00	1	3	LESS THAN 30MPH	VERGE	300	SINGLE ARM	MID GREY	RIGID COLUMN	URBIS	AXIA 2 S1	PETITJEAN	SHEET STEEL	5	PAINTED	DAER
46100791	KATHLEEN AVENUE	Scunthorpe	490025.65	408381.6	10	7009	00189686	01/04/1980 00:00	1	3	LESS THAN 30MPH	VERGE	300	SINGLE ARM	MID GREY	RIGID COLUMN	URBIS	AXIA 2 S1	PETITJEAN	SHEET STEEL	5	PAINTED	DAER
46100791	KATHLEEN AVENUE	Scunthorpe	490007.73	408359.92	11	7010	00189687	01/04/1980 00:00	1	3	LESS THAN 30MPH	VERGE	300	SINGLE ARM	MID GREY	RIGID COLUMN	URBIS	AXIA 2 S1	PETITJEAN	SHEET STEEL	5	PAINTED	DAER
46100791	KATHLEEN AVENUE	Scunthorpe	489977.63	408348.13	12	7011	00189688	01/04/1980 00:00	1	3	LESS THAN 30MPH	VERGE	300	SINGLE ARM	MID GREY	RIGID COLUMN	URBIS	AXIA 2 S1	PETITJEAN	SHEET STEEL	5	PAINTED	DAER
46100791	KATHLEEN AVENUE	Scunthorpe	489952.45	408319.77	13	7012	00189689	01/04/1980 00:00	1	3	LESS THAN 30MPH	VERGE	300	SINGLE ARM	MID GREY	RIGID COLUMN	URBIS	AXIA 2 S1	PETITJEAN	SHEET STEEL	5	PAINTED	DAER
46100791	KATHLEEN AVENUE	Scunthorpe	489923.75	408308.26	14	7013	00189690	01/04/1980 00:00	1	3	LESS THAN 30MPH	VERGE	300	SINGLE ARM	MID GREY	RIGID COLUMN	URBIS	AXIA 2 S1	PETITJEAN	SHEET STEEL	5	PAINTED	DAER
46100791	KATHLEEN AVENUE	Scunthorpe	490191.11	408502.25	2	7001	00189678	01/04/1980 00:00	1	3	LESS THAN 30MPH	VERGE	300	SINGLE ARM	MID GREY	RIGID COLUMN	URBIS	AXIA 2 S1	PETITJEAN	SHEET STEEL	5	PAINTED	DAER
46100791	KATHLEEN AVENUE	Scunthorpe	490181.49	408486.46	3	7002	00189679	01/04/1980 00:00	1	3	LESS THAN 30MPH	VERGE	300	SINGLE ARM	MID GREY	RIGID COLUMN	URBIS	AXIA 2 S1	PETITJEAN	SHEET STEEL	5	PAINTED	DAER
46100791	KATHLEEN AVENUE	Scunthorpe	490161.84	408480.96	4	7003	00189680	01/04/1980 00:00	1	3	LESS THAN 30MPH	VERGE	300	SINGLE ARM	MID GREY	RIGID COLUMN	URBIS	AXIA 2 S1	PETITJEAN	SHEET STEEL	5	PAINTED	DAER
46100791	KATHLEEN AVENUE	Scunthorpe	490136.86	408465.46	5	7004	00189681	01/04/1980 00:00	1	3	LESS THAN 30MPH	FRONT OF FOOTPATH	300	SINGLE ARM	MID GREY	RIGID COLUMN	URBIS	AXIA 2 S1	PETITJEAN	SHEET STEEL	5	PAINTED	DAER
46100791	KATHLEEN AVENUE	Scunthorpe	490122.45	408443.83	6	7005	00189682	01/04/1980 00:00	1	3	LESS THAN 30MPH	VERGE	300	SINGLE ARM	MID GREY	RIGID COLUMN	URBIS	AXIA 2 S1	PETITJEAN	SHEET STEEL	5	PAINTED	DAER
46100791	KATHLEEN AVENUE	Scunthorpe	490090.47	408429.13	7	7006	00189683	01/04/1980 00:00	1	3	LESS THAN 30MPH	VERGE	300	SINGLE ARM	MID GREY	RIGID COLUMN	URBIS	AXIA 2 S1	PETITJEAN	SHEET STEEL	5	PAINTED	DAER
46100791	KATHLEEN AVENUE	Scunthorpe	490067.55	408412.17	8	7007	00189684	01/04/1980 00:00	1	3	LESS THAN 30MPH	VERGE	300	SINGLE ARM	MID GREY	RIGID COLUMN	URBIS	AXIA 2 S1	PETITJEAN	SHEET STEEL	5	PAINTED	DAER
46100791	KATHLEEN AVENUE	Scunthorpe	490054.83	408395.11	9	7008	00189685	01/04/1980 00:00	1	3	LESS THAN 30MPH	VERGE	300	SINGLE ARM	MID GREY	RIGID COLUMN	URBIS	AXIA 2 S1	PETITJEAN	SHEET STEEL	5	PAINTED	DAER
46100792	KEATS AVENUE	Scunthorpe	487819.45	409190.35	1	7000	00189691	01/04/2008 00:00	5	2	LESS THAN 30MPH	BACK OF PATH	0	POST TOP	NOT APPLICABLE	RIGID COLUMN	URBIS	AXIA 2 S1	VALMONT ST	TUBULAR STEEL	6	GALVANISED	TUBULAR
46100792	KEATS AVENUE	Scunthorpe	487819.38	409157.98	2	7001	00189692	01/04/2008 00:00	5	2	LESS THAN 30MPH	BACK OF PATH	0	POST TOP	NOT APPLICABLE	RIGID COLUMN	URBIS	AXIA 2 S1	VALMONT ST	TUBULAR STEEL	6	GALVANISED	TUBULAR
46100792	KEATS AVENUE	Scunthorpe	487811.51	409127.08	3	7002	00189693	01/04/1980 00:00	5	2	LESS THAN 30MPH	BACK OF FOOTPATH	300	SINGLE ARM	NOT APPLICABLE	RIGID COLUMN	URBIS	AXIA 2 S1	PETITJEAN	SHEET STEEL	5	GALVANISED	DAER
46100794	KEDDINGTON ROAD	Bottesford Parish	489012.75	407538.82	1	7000	00189694	01/04/1999 00:00	3	1	LESS THAN 30MPH	VERGE	800	SINGLE ARM	NOT APPLICABLE	RIGID COLUMN	URBIS	AXIA 2 S1	PETITJEAN	SHEET STEEL	8	GALVANISED	THAMES
46100794	KEDDINGTON ROAD	Bottesford Parish	488984.63	407546.14	2	7003	00189697	01/04/1995 00:00	3	1	LESS THAN 30MPH	VERGE	0	POST TOP	NOT APPLICABLE	RIGID COLUMN	URBIS	AXIA 2 S1	PETITJEAN	SHEET STEEL	6	GALVANISED	NIDD
46100794	KEDDINGTON ROAD	Bottesford Parish	488960.77	407564.32	3	7004	00189698	01/04/1995 00:00	3	1	LESS THAN 30MPH	VERGE	0	POST TOP	NOT APPLICABLE	RIGID COLUMN	URBIS	AXIA 2 S1	PETITJEAN	SHEET STEEL	6	GALVANISED	NIDD
46100794	KEDDINGTON ROAD	Bottesford Parish	488941.42	407563.78	4	7005	00189699	01/04/1995 00:00	3	1	LESS THAN 30MPH	VERGE	0	POST TOP	NOT APPLICABLE	RIGID COLUMN	URBIS	AXIA 2 S1	PETITJEAN	SHEET STEEL	6	GALVANISED	NIDD
46100794	KEDDINGTON ROAD	Bottesford Parish	488915.88	407581.25	5	7006	00189700	01/04/1995 00:00	3	1	LESS THAN 30MPH	VERGE	0	POST TOP	NOT APPLICABLE	RIGID COLUMN	URBIS	AXIA 2 S1	PETITJEAN	SHEET STEEL	6	GALVANISED	NIDD
46100794	KEDDINGTON ROAD	Bottesford Parish	488882.01	407580.72	6	7007	00189701	01/04/1995 00:00	3	1	LESS THAN 30MPH	VERGE	0	POST TOP	NOT APPLICABLE	RIGID COLUMN	URBIS	AXIA 2 S1	PETITJEAN	SHEET STEEL	6	GALVANISED	NIDD
46100795	KEELBY ROAD	Scunthorpe	488590.32	408178.21	1	7000	00189702	01/04/2013 00:00	3	4	LESS THAN 30MPH	FRONT OF FOOTPATH	0	POST TOP	NOT APPLICABLE	RIGID COLUMN	URBIS	AXIA 2 S1	MALLATITE	TUBULAR STEEL	6	GALVANISED	TUBULAR
46100795	KEELBY ROAD	Scunthorpe	488545	408057	1	7010	04200326	01/04/2006 00:00	3	4	NOT ON A ROAD	BACK OF FOOTPATH	0	POST TOP	NOT APPLICABLE	RIGID COLUMN	URBIS	AXIA 2 S1	VALMONT ST	TUBULAR STEEL	6	GALVANISED	TUBULAR
46100795	KEELBY ROAD	Scunthorpe	488571.94	407927.53	10	7009	00189711	10/12/2020 00:00	3	4	LESS THAN 30MPH	BACK OF FOOTPATH	0	POST TOP	NOT APPLICABLE	RIGID COLUMN	URBIS	AXIA 2 S1	MALLATITE	TUBULAR STEEL	6	GALVANISED	TUBULAR
46100795	KEELBY ROAD	Scunthorpe	488575	408142.86	2	7001	00189703	10/12/2020 00:00	3	4	LESS THAN 30MPH	BACK OF FOOTPATH	0	POST TOP	NOT APPLICABLE	RIGID COLUMN	URBIS	AXIA 2 S1	MALLATITE	TUBULAR STEEL	6	GALVANISED	TUBULAR
46100795	KEELBY ROAD	Scunthorpe	488578	408070	2	7011	04200327	01/04/2006 00:00	3	4	NOT ON A ROAD	BACK OF FOOTPATH	0	POST TOP	NOT APPLICABLE	MID HINGED	URBIS	AXIA 2 S1	VALMONT ST	SHEET STEEL	5	GALVANISED	LEVEN
46100795	KEELBY ROAD	Scunthorpe	488583.72	408110.12	3	7002	00189704	10/12/2020 00:00	3	4	LESS THAN 30MPH	BACK OF FOOTPATH	0	POST TOP	NOT APPLICABLE	RIGID COLUMN	URBIS	AXIA 2 S1	MALLATITE	TUBULAR STEEL	6	GALVANISED	TUBULAR
46100795	KEELBY ROAD	Scunthorpe	488595.43	408076.46	4	7003	00189705	01/04/2010 00:00	3	4	LESS THAN 30MPH	FRONT OF FOOTPATH	0	POST TOP	NOT APPLICABLE	RIGID COLUMN	URBIS	AXIA 2 S1	VALMONT ST	TUBULAR STEEL	6	GALVANISED	TUBULAR
46100795	KEELBY ROAD	Scunthorpe	488612.44	408046.77	5	7004	00189706	10/12/2020 00:00	3	4	LESS THAN 30MPH	BACK OF FOOTPATH	0	POST TOP	NOT APPLICABLE	RIGID COLUMN	URBIS	AXIA 2 S1	MALLATITE	TUBULAR STEEL	6	GALVANISED	TUBULAR
46100795	KEELBY ROAD	Scunthorpe	488616.68	408014.28	6	7005	00189707	17/06/2019 00:00	3	4	LESS THAN 30MPH	FRONT OF FOOTPATH	0	POST TOP	NOT APPLICABLE	RIGID COLUMN	URBIS	AXIA 2 S1	MALLATITE	TUBULAR STEEL	6	GALVANISED	TUBULAR
46100795	KEELBY ROAD	Scunthorpe	488634.75	407986.26	7	7006	00189708	01/04/1995 00:00	3	4	LESS THAN 30MPH	BACK OF FOOTPATH	0	POST TOP	NOT APPLICABLE	RIGID COLUMN	URBIS	AXIA 2 S1	PETITJEAN	SHEET STEEL	5	GALVANISED	NIDD
46100795	KEELBY ROAD	Scunthorpe	488631.69	407958.2	8	7007	00189709	10/12/2020 00:00	3	4	LESS THAN 30MPH	BACK OF FOOTPATH	0	POST TOP	NOT APPLICABLE	RIGID COLUMN	URBIS	AXIA 2 S1	MALLATITE	TUBULAR STEEL	6	GALVANISED	TUBULAR
46100795	KEELBY ROAD	Scunthorpe	488606.46	407939.47	9	7008	00189710	10/12/2020 00:00	3	4	LESS THAN 30MPH	BACK OF FOOTPATH	0	POST TOP	NOT APPLICABLE	RIGID COLUMN	URBIS	AXIA 2 S1	MALLATITE	TUBULAR STEEL	6	GALVANISED	TUBULAR
46100796	KELSEY AVENUE	Gunness Parish	486999.18	411273.52	1	7000	00189712	01/04/2010 00:00	2	2	LESS THAN 30MPH	BACK OF FOOTPATH	0	POST TOP	NOT APPLICABLE	RIGID COLUMN	URBIS	AXIA 2 S1	MALLATITE	TUBULAR STEEL	6	GALVANISED	TUBULAR
46100796	KELSEY AVENUE	Gunness Parish	486970.68	411271.1	2	7001	00189713	01/04/1987 00:00	2	2	LESS THAN 30MPH	BACK OF FOOTPATH	0	POST TOP	LIGHT GREY	RIGID COLUMN	URBIS	AXIA 2 S1	PETITJEAN	SHEET STEEL	5	PAINTED	NIDD
46100796	KELSEY AVENUE	Gunness Parish	486941.09	411271.45	3	7002	00189714	01/04/1980 00:00	2	2	LESS THAN 30MPH	VERGE	0	POST TOP	LIGHT GREY	RIGID COLUMN	URBIS	AXIA 2 S1	PETITJEAN	SHEET STEEL	5	PAINTED	NIDD
46100796	KELSEY AVENUE	Gunness Parish	486909.81	411266.44	4	7003	00189715	01/04/1980 00:00	2	2	LESS THAN 30MPH	VERGE	0	POST TOP	LIGHT GREY	RIGID COLUMN	URBIS	AXIA 2 S1	PETITJEAN	SHEET STEEL	5	PAINTED	NIDD
46100796	KELSEY AVENUE	Gunness Parish	486879.62	411272.29	5	7004	00189716	01/04/1980 00:00	2	2	LESS THAN 30MPH	BACK OF FOOTPATH	0	POST TOP	LIGHT GREY	RIGID COLUMN	URBIS	AXIA 2 S1	PETITJEAN	SHEET STEEL	5	PAINTED	NIDD
46100796	KELSEY AVENUE	Gunness Parish	486847.3	411272.7	6	7005	00189717	01/04/1987 00:00	2	2	LESS THAN 30MPH	BACK OF FOOTPATH	0	POST TOP	LIGHT GREY	RIGID COLUMN	URBIS	AXIA 2 S1	PETITJEAN	SHEET STEEL	5	PAINTED	NIDD
46100797	KELSEY LANE	Keadby with Althorpe Parish	483456.99	409728.74	1	7000	00189718	01/04/1988 00:00	4	3	LESS THAN 30MPH	BACK OF FOOTPATH	300	SINGLE ARM	MID GREY	RIGID COLUMN	URBIS	AXIA 2 S1	PETITJEAN	SHEET STEEL	5	PAINTED	DAER
46100797	KELSEY LANE	Keadby with Althorpe Parish	483426.57	409740.04	2	7001	00189719	01/04/1988 00:00	4	3	LESS THAN 30MPH	BACK OF FOOTPATH	300	SINGLE ARM	MID GREY	RIGID COLUMN	URBIS	AXIA 2 S1	PETITJEAN	SHEET STEEL	5	PAINTED	DAER
46100797	KELSEY LANE	Keadby with Althorpe Parish	483397.12	409745.66	3	7002	00189720	01/04/1999 00:00	4	3	LESS THAN 30MPH	BACK OF FOOTPATH	300	SINGLE ARM	MID GREY	RIGID COLUMN	URBIS	AXIA 2 S1	PETITJEAN	SHEET STEEL	5	PAINTED	DAER
46100797	KELSEY LANE	Keadby with Althorpe Parish	483366	409751.39	4	7003	00189721	01/04/1999 00:00	4	3	LESS THAN 30MPH	BACK OF FOOTPATH	300	SINGLE ARM	MID GREY	RIGID COLUMN	URBIS	AXIA 2 S1	PETITJEAN	SHEET STEEL	5	PAINTED	DAER
46100797	KELSEY LANE	Keadby with Althorpe Parish	483340.81	409756.46	5	7004	00189722	01/04/1999 00:00	4	3	LESS THAN 30MPH	BACK OF FOOTPATH	300	SINGLE ARM	MID GREY	RIGID COLUMN	URBIS	AXIA 2 S1	PETITJEAN	SHEET STEEL	5	PAINTED	DAER
46100797	KELSEY LANE	Keadby with Althorpe Parish	483305.93	409763.08	6	7005	00189723	06/04/2018 00:00	4	3	LESS THAN 30MPH	BACK OF FOOTPATH	0	POST TOP	NOT APPLICABLE	RIGID COLUMN	URBIS	AXIA 2 S1	VALMONT ST	TUBULAR STEEL	6	GALVANISED	TUBULAR
46100797	KELSEY LANE	Keadby with Althorpe Parish	483258.76	409769.7	7	7006	00189724	06/04/2018 00:00	4	3	LESS THAN 30MPH	BACK OF FOOTPATH	0	POST TOP	NOT APPLICABLE	RIGID COLUMN	URBIS	AXIA 2 S1	VALMONT ST	TUBULAR STEEL	6	GALVANISED	TUBULAR
46100798	KENDALE ROAD	Scunthorpe	491048.78	409702.27	1	7000	00189725	01/04/1990 00:00	3	2	LESS THAN 30MPH	BACK OF FOOTPATH	1250	SINGLE ARM	NOT APPLICABLE	RIGID COLUMN	URBIS	AXIA 2 S1	PETITJEAN	SHEET STEEL	8	GALVANISED	THAMES
46100798	KENDALE ROAD	Scunthorpe	491077.16	409696.12	2	7001	00189726	01/04/1990 00:00	3	2	LESS THAN 30MPH	BACK OF FOOTPATH	1250	SINGLE ARM	NOT APPLICABLE	RIGID COLUMN	URBIS	AXIA 2 S1	PETITJEAN	SHEET STEEL	8	GALVANISED	THAMES
46100798	KENDALE ROAD	Scunthorpe	491096.25	409691.5	3	7002	00189727	01/04/1990 00:00	3	2	LESS THAN 30MPH	BACK OF FOOTPATH	1250	SINGLE ARM	NOT APPLICABLE	RIGID COLUMN	URBIS	AXIA 2 S1	PETITJEAN	SHEET STEEL	8	GALVANISED	THAMES
46100799	KENNEDY CLOSE	Brigg Parish	501105.26	407240.82	1	7000	00189728	11/11/2019 00:00	2	3	LESS THAN 30MPH	BACK OF FOOTPATH	0	POST TOP	NOT APPLICABLE	RIGID COLUMN	URBIS	AXIA 2 S1	MALLATITE	TUBULAR STEEL	6	GALVANISED	TUBULAR
46100799	KENNEDY CLOSE	Brigg Parish	501074.16	407241.42	2	7001	00189729	11/11/2019 00:00	2	3	LESS THAN 30MPH	BACK OF FOOTPATH	0	POST TOP	NOT APPLICABLE	RIGID COLUMN	URBIS	AXIA 2 S1	MALLATITE	TUBULAR STEEL	6	GALVANISED	TUBULAR
46100799	KENNEDY CLOSE	Brigg Parish	501035.47	407222.3	3	7002	00189730	11/11/2019 00:00	2	3	LESS THAN 30MPH	BACK OF FOOTPATH	0	POST TOP	NOT APPLICABLE	RIGID COLUMN	URBIS	AXIA 2 S1	MALLATITE	TUBULAR STEEL	6	GALVANISED	TUBULAR
46100800	KENSINGTON ROAD	Gunness Parish	486959.36	411288.81	1	7000	00189731	01/04/1987 00:00	2	2	LESS THAN 30MPH	BACK OF FOOTPATH	0	POST TOP	NOT APPLICABLE	RIGID COLUMN	URBIS	AXIA 2 S1	MALLATITE	TUBULAR STEEL	6	GALVANISED	STEPPED TUBULAR
46100800	KENSINGTON ROAD	Gunness Parish	486965.17	411322.05	2	7001	00189732	01/04/2010 00:00	2	2	LESS THAN 30MPH	BACK OF FOOTPATH	0	POST TOP	NOT APPLICABLE	RIGID COLUMN	URBIS	AXIA 2 S1	MALLATITE	TUBULAR STEEL	6	GALVANISED	TUBULAR
46100800	KENSINGTON ROAD	Gunness Parish	486932.25	411334.7	3	7002	00189733	01/04/2010 00:00	2	2	LESS THAN 30MPH	BACK OF FOOTPATH	0	POST TOP	NOT APPLICABLE

46100821	KINGSTON ROAD	Scunthorpe	489239.73	409244.33	8	7007	00189904	01/04/1993 00:00	2	4	LESS THAN 30MPH	BACK OF FOOTPATH	0	POST TOP	NOT APPLICABLE	RIGID COLUMN	URBIS	AXIA 2 S1	PETITJEAN	SHEET STEEL	6	GALVANISED	DAER	
46100821	KINGSTON ROAD	Scunthorpe	489244.25	409216.19	9	7008	00189905	01/04/1993 00:00	2	4	LESS THAN 30MPH	BACK OF FOOTPATH	0	POST TOP	NOT APPLICABLE	RIGID COLUMN	URBIS	AXIA 2 S1	PETITJEAN	SHEET STEEL	6	GALVANISED	DAER	
46100822	KINGSTON VIEW	Barton upon Humber Parish	503946.47	421423.58	1	7000	00189910	01/04/2001 00:00	5	2	LESS THAN 30MPH	BACK OF FOOTPATH	0	POST TOP	NOT APPLICABLE	RIGID COLUMN	URBIS	AXIA 2 S1	MALLATITE	TUBULAR STEEL	6	GALVANISED	STEPPED TUBULAR	
46100822	KINGSTON VIEW	Barton upon Humber Parish	503962.69	421398.34	2	7001	00189911	01/04/2001 00:00	5	2	LESS THAN 30MPH	BACK OF FOOTPATH	0	POST TOP	NOT APPLICABLE	RIGID COLUMN	URBIS	AXIA 2 S1	MALLATITE	TUBULAR STEEL	6	GALVANISED	STEPPED TUBULAR	
46100822	KINGSTON VIEW	Barton upon Humber Parish	503986.07	421372.47	3	7002	00189912	01/04/2001 00:00	5	2	LESS THAN 30MPH	BACK OF FOOTPATH	0	POST TOP	NOT APPLICABLE	RIGID COLUMN	URBIS	AXIA 2 S1	MALLATITE	TUBULAR STEEL	6	GALVANISED	STEPPED TUBULAR	
46100822	KINGSTON VIEW	Barton upon Humber Parish	504014.76	421359.98	4	7003	00189913	01/04/2001 00:00	5	2	LESS THAN 30MPH	BACK OF FOOTPATH	0	POST TOP	NOT APPLICABLE	RIGID COLUMN	URBIS	AXIA 2 S1	MALLATITE	TUBULAR STEEL	6	GALVANISED	STEPPED TUBULAR	
46100822	KINGSTON VIEW	Barton upon Humber Parish	504020.73	421334.07	5	7004	00189914	01/04/2003 00:00	5	2	LESS THAN 30MPH	BACK OF FOOTPATH	0	POST TOP	NOT APPLICABLE	RIGID COLUMN	URBIS	AXIA 2 S1	BEI	TUBULAR STEEL	6	GALVANISED	STEPPED TUBULAR	
46100822	KINGSTON VIEW	Barton upon Humber Parish	504017.81	421312.17	6	7005	00189915	01/04/2001 00:00	5	2	LESS THAN 30MPH	BACK OF FOOTPATH	0	POST TOP	NOT APPLICABLE	RIGID COLUMN	URBIS	AXIA 2 S1	MALLATITE	TUBULAR STEEL	6	GALVANISED	STEPPED TUBULAR	
46100823	KINGSWAY	Brigg Parish	499875.91	407573.63	1	7000	00189916	01/04/2005 00:00	2	3	LESS THAN 30MPH	BACK OF FOOTPATH	0	POST TOP	NOT APPLICABLE	RIGID COLUMN	URBIS	AXIA 2 S1	MALLATITE	TUBULAR STEEL	6	GALVANISED	TUBULAR	
46100823	KINGSWAY	Brigg Parish	499836.24	407578.77	2	7001	00189917	18/11/2019 00:00	2	3	LESS THAN 30MPH	FRONT OF FOOTPATH	0	POST TOP	NOT APPLICABLE	RIGID COLUMN	URBIS	AXIA 2 S1	MALLATITE	TUBULAR STEEL	6	GALVANISED	TUBULAR	
46100824	KIPLING AVENUE	Scunthorpe	487827.61	409218.73	1	7000	00189918	01/04/2008 00:00	5	2	LESS THAN 30MPH	BACK OF PATH	0	POST TOP	NOT APPLICABLE	RIGID COLUMN	URBIS	AXIA 2 S1	VALMONT ST	TUBULAR STEEL	6	GALVANISED	TUBULAR	
46100824	KIPLING AVENUE	Scunthorpe	487833.32	409250.55	2	7001	00189919	01/04/2008 00:00	5	2	LESS THAN 30MPH	BACK OF PATH	0	POST TOP	NOT APPLICABLE	RIGID COLUMN	URBIS	AXIA 2 S1	VALMONT ST	TUBULAR STEEL	6	GALVANISED	TUBULAR	
46100824	KIPLING AVENUE	Scunthorpe	487834.81	409276.96	4	7003	00189921	01/04/1993 00:00	5	2	LESS THAN 30MPH	BACK OF FOOTPATH	800	SINGLE ARM	NOT APPLICABLE	RIGID COLUMN	URBIS	AXIA 2 S1	PETITJEAN	SHEET STEEL	6	GALVANISED	DAER	
46100825	KIRKBY ROAD	Scunthorpe	488373.52	407960.03	1	7000	00189922	01/04/1995 00:00	3	4	LESS THAN 30MPH	BACK OF FOOTPATH	0	POST TOP	NOT APPLICABLE	RIGID COLUMN	URBIS	AXIA 2 S1	PETITJEAN	SHEET STEEL	6	GALVANISED	NIDD	
46100825	KIRKBY ROAD	Scunthorpe	488373.99	407931.03	2	7001	00189923	01/04/1995 00:00	3	4	LESS THAN 30MPH	BACK OF FOOTPATH	0	POST TOP	NOT APPLICABLE	RIGID COLUMN	URBIS	AXIA 2 S1	PETITJEAN	SHEET STEEL	6	GALVANISED	NIDD	
46100825	KIRKBY ROAD	Scunthorpe	488393.82	407902.43	3	7002	00189924	01/04/1995 00:00	3	4	LESS THAN 30MPH	BACK OF FOOTPATH	0	POST TOP	NOT APPLICABLE	RIGID COLUMN	URBIS	AXIA 2 S1	PETITJEAN	SHEET STEEL	6	GALVANISED	NIDD	
46100825	KIRKBY ROAD	Scunthorpe	488397.85	407865.27	4	7003	00189925	01/04/1995 00:00	3	4	LESS THAN 30MPH	BACK OF FOOTPATH	0	POST TOP	NOT APPLICABLE	RIGID COLUMN	URBIS	AXIA 2 S1	PETITJEAN	SHEET STEEL	6	GALVANISED	NIDD	
46100825	KIRKBY ROAD	Scunthorpe	488417.92	407837.01	5	7004	00189926	01/04/1995 00:00	3	4	LESS THAN 30MPH	BACK OF FOOTPATH	0	POST TOP	NOT APPLICABLE	RIGID COLUMN	URBIS	AXIA 2 S1	PETITJEAN	SHEET STEEL	6	GALVANISED	NIDD	
46100825	KIRKBY ROAD	Scunthorpe	488427.51	407799.55	6	7005	00189927	01/04/1995 00:00	3	4	LESS THAN 30MPH	BACK OF FOOTPATH	0	POST TOP	NOT APPLICABLE	RIGID COLUMN	URBIS	AXIA 2 S1	PETITJEAN	SHEET STEEL	6	GALVANISED	NIDD	
46100825	KIRKBY ROAD	Scunthorpe	488461.05	407788.88	7	7006	00189928	01/04/1995 00:00	3	4	LESS THAN 30MPH	BACK OF FOOTPATH	0	POST TOP	NOT APPLICABLE	RIGID COLUMN	URBIS	AXIA 2 S1	PETITJEAN	SHEET STEEL	6	GALVANISED	NIDD	
46100825	KIRKBY ROAD	Scunthorpe	488482.97	407762.48	8	7007	00189929	01/04/1995 00:00	3	4	LESS THAN 30MPH	BACK OF FOOTPATH	0	POST TOP	NOT APPLICABLE	RIGID COLUMN	URBIS	AXIA 2 S1	PETITJEAN	SHEET STEEL	6	GALVANISED	NIDD	
46100826	KIRMAN CRESCENT	Bottesford Parish	488772.16	407161.28	1	7000	00189930	01/04/1980 00:00	3	1	LESS THAN 30MPH	VERGE	300	SINGLE ARM	NOT APPLICABLE	RIGID COLUMN	URBIS	AXIA 2 S1	PETITJEAN	SHEET STEEL	5	GALVANISED	DAER	
46100826	KIRMAN CRESCENT	Bottesford Parish	488768.12	407187.89	2	7001	00189931	03/09/2019 00:00	3	1	LESS THAN 30MPH	FRONT OF FOOTPATH	0	POST TOP	NOT APPLICABLE	RIGID COLUMN	URBIS	AXIA 2 S1	MALLATITE	TUBULAR STEEL	6	GALVANISED	TUBULAR	
46100829	KNIGHTS CLOSE	Belton Parish	478837.64	407098.51	1	7000	00189932	01/04/1990 00:00	5	3	LESS THAN 30MPH	VERGE	0	POST TOP	NOT APPLICABLE	RIGID COLUMN	URBIS	AXIA 2 S1	MALLATITE	TUBULAR STEEL	5	GALVANISED	STEPPED TUBULAR	
46100829	KNIGHTS CLOSE	Belton Parish	478839.26	407114.37	2	7001	00189933	01/04/1990 00:00	5	3	LESS THAN 30MPH	VERGE	0	POST TOP	NOT APPLICABLE	RIGID COLUMN	URBIS	AXIA 2 S1	MALLATITE	TUBULAR STEEL	5	GALVANISED	STEPPED TUBULAR	
46100829	KNIGHTS CLOSE	Belton Parish	478833.07	407140.71	3	7002	00189934	01/04/1990 00:00	5	3	LESS THAN 30MPH	VERGE	0	POST TOP	NOT APPLICABLE	RIGID COLUMN	URBIS	AXIA 2 S1	MALLATITE	TUBULAR STEEL	5	GALVANISED	STEPPED TUBULAR	
46100830	LABRADOR DRIVE	Broughton Parish	496273.42	409191.71	1	7000	00189935	02/04/2019 00:00	1	1	LESS THAN 30MPH	BACK OF PATH	0	POST TOP	NOT APPLICABLE	RIGID COLUMN	URBIS	AXIA 2 S1	MALLATITE	TUBULAR STEEL	6	GALVANISED	TUBULAR	
46100830	LABRADOR DRIVE	Broughton Parish	496291.6	409217.13	2	7001	00189936	02/04/2019 00:00	1	1	LESS THAN 30MPH	BACK OF FOOTPATH	0	POST TOP	NOT APPLICABLE	RIGID COLUMN	URBIS	AXIA 2 S1	MALLATITE	TUBULAR STEEL	6	GALVANISED	TUBULAR	
46100830	LABRADOR DRIVE	Broughton Parish	496323.56	409236.36	3	7002	00189937	02/04/2019 00:00	1	1	LESS THAN 30MPH	BACK OF FOOTPATH	0	POST TOP	NOT APPLICABLE	RIGID COLUMN	URBIS	AXIA 2 S1	MALLATITE	TUBULAR STEEL	6	GALVANISED	TUBULAR	
46100831	LABURNUM AVENUE	Gunness Parish	484157.27	411571.62	1	7000	00189938	01/05/2019 00:00	2	2	LESS THAN 30MPH	BACK OF FOOTPATH	0	POST TOP	NOT APPLICABLE	RIGID COLUMN	URBIS	AXIA 2 S1	MALLATITE	TUBULAR STEEL	6	GALVANISED	TUBULAR	
46100831	LABURNUM AVENUE	Gunness Parish	484197.46	411568.79	2	7001	00189939	01/05/2019 00:00	2	2	LESS THAN 30MPH	BACK OF FOOTPATH	0	POST TOP	NOT APPLICABLE	RIGID COLUMN	URBIS	AXIA 2 S1	MALLATITE	TUBULAR STEEL	6	GALVANISED	TUBULAR	
46100831	LABURNUM AVENUE	Gunness Parish	484233.46	411564.65	3	7002	00189940	01/05/2019 00:00	2	2	LESS THAN 30MPH	BACK OF FOOTPATH	0	POST TOP	NOT APPLICABLE	RIGID COLUMN	URBIS	AXIA 2 S1	MALLATITE	TUBULAR STEEL	6	GALVANISED	TUBULAR	
46100832	LABURNUM GROVE	Burton upon Stather Parish	487530.33	418078.16	1	7000	00189941	01/04/1995 00:00	2	3	LESS THAN 30MPH	BACK OF FOOTPATH	0	POST TOP	NOT APPLICABLE	RIGID COLUMN	URBIS	AXIA 2 S1	PETITJEAN	SHEET STEEL	5	GALVANISED	NIDD	
46100832	LABURNUM GROVE	Burton upon Stather Parish	487503.18	418081.66	2	7001	00189942	01/04/1995 00:00	2	3	LESS THAN 30MPH	BACK OF FOOTPATH	0	POST TOP	NOT APPLICABLE	RIGID COLUMN	URBIS	AXIA 2 S1	PETITJEAN	SHEET STEEL	5	GALVANISED	NIDD	
46100833	LABURNUM GROVE	Crowle Parish	477277.17	412508.94	1	7000	00189943	01/04/1980 00:00	5	1	LESS THAN 30MPH	VERGE	300	SINGLE ARM	NOT APPLICABLE	RIGID COLUMN	URBIS	AXIA 2 S1	PETITJEAN	SHEET STEEL	5	GALVANISED	DAER	
46100833	LABURNUM GROVE	Crowle Parish	477297.47	412484.95	2	7001	00189944	01/04/1985 00:00	5	1	LESS THAN 30MPH	VERGE	0	POST TOP	NOT APPLICABLE	RIGID COLUMN	URBIS	AXIA 2 S1	PETITJEAN	SHEET STEEL	5	GALVANISED	NIDD	
46100833	LABURNUM GROVE	Crowle Parish	477285.19	412476.7	3	7002	00189945	01/04/1985 00:00	5	1	LESS THAN 30MPH	VERGE	300	SINGLE ARM	NOT APPLICABLE	RIGID COLUMN	URBIS	AXIA 2 S1	PETITJEAN	SHEET STEEL	5	GALVANISED	DAER	
46100834	LABURNUM GROVE	Scunthorpe	489940.05	409132.96	1	7000	00189947	24/03/2020 00:00	2	4	LESS THAN 30MPH	BACK OF FOOTPATH	0	POST TOP	NOT APPLICABLE	RIGID COLUMN	URBIS	AXIA 2 S1	MALLATITE	TUBULAR STEEL	6	GALVANISED	TUBULAR	
46100834	LABURNUM GROVE	Scunthorpe	489942.66	409159.12	2	7001	00189948	24/03/2020 00:00	2	4	LESS THAN 30MPH	BACK OF FOOTPATH	0	POST TOP	NOT APPLICABLE	RIGID COLUMN	URBIS	AXIA 2 S1	MALLATITE	TUBULAR STEEL	6	GALVANISED	TUBULAR	
46100834	LABURNUM GROVE	Scunthorpe	489974.19	409179.41	3	7002	00189949	24/03/2020 00:00	2	4	LESS THAN 30MPH	BACK OF FOOTPATH	0	POST TOP	NOT APPLICABLE	RIGID COLUMN	URBIS	AXIA 2 S1	MALLATITE	TUBULAR STEEL	6	GALVANISED	TUBULAR	
46100834	LABURNUM GROVE	Scunthorpe	489998.39	409207.82	4	7003	00189950	24/03/2020 00:00	2	4	LESS THAN 30MPH	BACK OF FOOTPATH	0	POST TOP	NOT APPLICABLE	RIGID COLUMN	URBIS	AXIA 2 S1	MALLATITE	TUBULAR STEEL	6	GALVANISED	TUBULAR	
46100834	LABURNUM GROVE	Scunthorpe	490029.7	409224.46	5	7004	00189951	24/03/2020 00:00	2	4	LESS THAN 30MPH	BACK OF FOOTPATH	0	POST TOP	NOT APPLICABLE	RIGID COLUMN	URBIS	AXIA 2 S1	MALLATITE	TUBULAR STEEL	6	GALVANISED	TUBULAR	
46100834	LABURNUM GROVE	Scunthorpe	490051.28	409241.47	6	7005	00189952	24/03/2020 00:00	2	4	LESS THAN 30MPH	BACK OF FOOTPATH	0	POST TOP	NOT APPLICABLE	RIGID COLUMN	URBIS	AXIA 2 S1	MALLATITE	TUBULAR STEEL	6	GALVANISED	TUBULAR	
46100835	LACEBY ROAD	Scunthorpe	488375.27	407999.17	1	7000	00189953	01/04/2005 00:00	3	4	LESS THAN 30MPH	BACK OF FOOTPATH	0	POST TOP	NOT APPLICABLE	RIGID COLUMN	URBIS	AXIA 2 S1	MALLATITE	TUBULAR STEEL	6	GALVANISED	TUBULAR	
46100835	LACEBY ROAD	Scunthorpe	488376.42	408023.42	2	7001	00189954	01/04/2001 00:00	3	4	LESS THAN 30MPH	BACK OF FOOTPATH	500	SINGLE ARM	NOT APPLICABLE	RIGID COLUMN	URBIS	AXIA 2 S1	MALLATITE	TUBULAR STEEL	5	GALVANISED	STEPPED TUBULAR	
46100835	LACEBY ROAD	Scunthorpe	488363.08	408051.26	3	7002	00189955	01/04/2001 00:00	3	4	LESS THAN 30MPH	BACK OF FOOTPATH	500	SINGLE ARM	NOT APPLICABLE	RIGID COLUMN	URBIS	AXIA 2 S1	MALLATITE	TUBULAR STEEL	5	GALVANISED	STEPPED TUBULAR	
46100837	LAKESIDE DRIVE	Scunthorpe	487468.95	408227.67	1	7000	00189956	01/04/2013 00:00	3	4	LESS THAN 30MPH	VERGE	0	POST TOP	NOT APPLICABLE	RIGID COLUMN	URBIS	AXIA 2 S1	MALLATITE	TUBULAR STEEL	6	GALVANISED	TUBULAR	
46100837	LAKESIDE DRIVE	Scunthorpe	487603.13	408193.61	10	7009	00189965	01/04/2013 00:00	3	4	LESS THAN 30MPH	FRONT OF FOOTPATH	0	POST TOP	NOT APPLICABLE	RIGID COLUMN	URBIS	AXIA 2 S1	MALLATITE	TUBULAR STEEL	6	GALVANISED	TUBULAR	
46100837	LAKESIDE DRIVE	Scunthorpe	487586.27	408219.83	11	7010	00189966	01/04/2013 00:00	3	4	LESS THAN 30MPH	FRONT OF FOOTPATH	0	POST TOP	NOT APPLICABLE	RIGID COLUMN	URBIS	AXIA 2 S1	MALLATITE	TUBULAR STEEL	6	GALVANISED	TUBULAR	
46100837	LAKESIDE DRIVE	Scunthorpe	487568.94	408236.26	12	7011	00189967	01/04/2013 00:00	3	4	LESS THAN 30MPH	VERGE	0	POST TOP	NOT APPLICABLE	RIGID COLUMN	URBIS	AXIA 2 S1	MALLATITE	TUBULAR STEEL	6	GALVANISED	TUBULAR	
46100837	LAKESIDE DRIVE	Scunthorpe	487561.62	408276.58	13	7012	00189968	01/04/2013 00:00	3	4	LESS THAN 30MPH	FRONT OF FOOTPATH	0	POST TOP	NOT APPLICABLE	RIGID COLUMN	URBIS	AXIA 2 S1	MALLATITE	TUBULAR STEEL	6	GALVANISED	TUBULAR	
46100837	LAKESIDE DRIVE	Scunthorpe	487546.32	408308.11	14	7013	00189969	01/04/1980 00:00	3	4	LESS THAN 30MPH	BACK OF FOOTPATH	300	SINGLE ARM	NOT APPLICABLE	RIGID COLUMN	URBIS	AXIA 2 S1	PETITJEAN	SHEET STEEL	5	GALVANISED	DAER	
46100837	LAKESIDE DRIVE	Scunthorpe	487522.96	408315.71	15	7014	00189970	01/04/2013 00:00	3	4	LESS THAN 30MPH	BACK OF FOOTPATH	300	SINGLE ARM	NOT APPLICABLE	RIGID COLUMN	URBIS	AXIA 2 S1	MALLATITE	TUBULAR STEEL	6	GALVANISED	TUBULAR	
46100837	LAKESIDE DRIVE	Scunthorpe	487487.68	408319.14	16	7015	00189971	01/04/2013 00:00	3	4	LESS THAN 30MPH	FRONT OF FOOTPATH	0	POST TOP	NOT APPLICABLE	RIGID COLUMN	URBIS	AXIA 2 S1	MALLATITE	TUBULAR STEEL	6	GALVANISED	TUBULAR	
46100837	LAKESIDE DRIVE	Scunthorpe	487457.13	408316.04	17	7016	00189972	01/04/1980 00:00	3	4	LESS THAN 30MPH	FRONT OF FOOTPATH	300	SINGLE ARM	NOT APPLICABLE	RIGID COLUMN	URBIS	AXIA 2 S1	PETITJEAN	SHEET STEEL	5	GALVANISED	DAER	
46100837	LAKESIDE DRIVE	Scunthorpe	487435.27	408295.75	18	7017	00189973	01/04/1985 00:00	3	4	LESS THAN 30MPH	BACK OF FOOTPATH	300	SINGLE ARM	NOT APPLICABLE	RIGID COLUMN	URBIS	AXIA 2 S1	PETITJEAN	SHEET STEEL	5	GALVANISED	DAER	
46100837	LAKESIDE DRIVE	Scunthorpe	487431.7	408271.78	19	7018	00189974	01/04/1985 00:00	3	4	LESS THAN 30MPH	BACK OF FOOTPATH	300	SINGLE ARM	NOT APPLICABLE	RIGID COLUMN	URBIS	AXIA 2 S1	PETITJEAN	SHEET STEEL	5	GALVANISED	DAER	
46100837	LAKESIDE DRIVE	Scunthorpe	487480.21	408203.48	2	7001	00189957	01/04/2013 00:00	3	4	LESS THAN 30MPH	FRONT OF FOOTPATH	0	POST TOP	NOT APPLICABLE	RIGID COLUMN	URBIS	AXIA 2 S1	MALLATITE	TUBULAR STEEL	6	GALVANISED	TUBULAR	
46100837	LAKESIDE DRIVE	Scunthorpe	487450.27	408239.66	20	7019	00189975	01/04/2013 00:00	3	4	LESS THAN 30MPH	BACK OF FOOTPATH	0	POST TOP	NOT APPLICABLE	RIGID COLUMN	URBIS	AXIA 2 S1	MALLATITE	TUBULAR STEEL	6	GALVANISED	TUBULAR	
46100837	LAKESIDE DRIVE	Scunthorpe	487497.07	408189.75	3	7002	00189958	01/04/2013 00:00	3	4	LESS THAN 30MPH	VERGE	0	POST TOP	NOT APPLICABLE	RIGID COLUMN	URBIS	AXIA 2 S1	MALLATITE	TUBULAR STEEL	6	GALVANISED	TUBULAR	
46100837	LAKESIDE DRIVE	Scunthorpe	487521.2	408182.63	4	7003	00189959	01/04/2013 00:00	3	4	LESS THAN 30MPH	VERGE	0	POST TOP	NOT APPLICABLE	RIGID COLUMN	URBIS	AXIA 2 S1	MALLATITE	TUBULAR STEEL	6	GALVANISED	TUBULAR	
46100837	LAKESIDE DRIVE	Scunthorpe	487540.24	408161.72	5	7004	00189960	01/04/2013 00:00	3	4	LESS THAN 30MPH	VERGE	0	POST TOP	NOT APPLICABLE	RIGID COLUMN	URBIS	AXIA 2 S1	MALLATITE	TUBULAR STEEL	6	GALVANISED	TUBULAR	
46100837	LAKESIDE DRIVE	Scunthorpe	487559.45	408146.55	6	7005	00189961	01/04/2013 00:00	3	4	LESS THAN 30MPH	FRONT OF FOOTPATH	0	POST TOP	NOT APPLICABLE	RIGID COLUMN	URBIS	AXIA 2 S1	MALLATITE	TUBULAR STEEL	6	GALVANISED	TUBULAR	
46100837	LAKESIDE DRIVE	Scunthorpe	487592.42	408133.83	7	7006	00189962	01/04/2013 00:00	3	4	LESS THAN 30MPH	FRONT OF FOOTPATH	0	POST TOP	NOT APPLICABLE	RIGID COLUMN	URBIS	AXIA 2 S1	MALLATITE	TUBULAR STEEL	6	GALVANISED	TUBULAR	
46100837	LAKESIDE DRIVE	Scunthorpe	487598.04	408147.88	8	7007	00189963	01/04/1980 00:00	3	4	LESS THAN 30MPH	VERGE	300	SINGLE ARM	NOT APPLICABLE	RIGID COLUMN	URBIS	AXIA 2 S1	PETITJEAN	SHEET STEEL	5	GALVANISED	DAER	
46100837	LAKESIDE DRIVE	Scunthorpe	487602.79	408169.04	9	7008	00189964	01/04/2013 00:00	3	4	LESS THAN 30MPH	VERGE	0	POST TOP	NOT APPLICABLE	RIGID COLUMN	URBIS	AXIA 2 S1	MALLATITE	TUBULAR STEEL	6	GALVANISED	TUBULAR	
46100838	LANCASTER APPROACH	North Killingholme Parish	514119.48	417475.65	1	7000	00189976	01/04/1981 00:00	4	1	GREATER THAN 50MPH	BACK OF FOOTPATH	1000	SINGLE ARM	NOT APPLICABLE	RIGID COLUMN	URBIS	AXIA 2 S1	PETITJEAN	SHEET STEEL	8	GALVANISED	THAMES	
46100838	LANCASTER APPROACH	North Killingholme Parish	513822.15	417368.72	10FP	7009	00189985	01/04/1981 00:00	4	1	GREATER THAN 50MPH	FRONT OF FOOTPATH	1500	SINGLE ARM	DARK GREY	RIGID COLUMN	URBIS	AXIA 2 S1	PETITJEAN	SHEET STEEL	8	PAINTED	THAMES	
46100838	LANCASTER APPROACH	North Killingholme Parish	513789.61	417354.94	11	7010	00189986	01/04/1981 00:00	4	1	GREATER THAN 50MPH	FRONT OF FOOTPATH	1500	SINGLE ARM	DARK GREY	RIGID COLUMN	URBIS	AXIA 2 S1	PETITJEAN	SHEET STEEL	8	PAINTED	THAMES	
46100838	LANCASTER APPROACH	North Killingholme Parish	513758.63	417343.28	12	7011	00189987	01/04/1981 00:00	4	1	GREATER THAN 50MPH	FRONT OF FOOTPATH	1500	SINGLE ARM	DARK GREY	RIGID COLUMN	URBIS	AXIA 2 S1	PETITJEAN	SHEET STEEL	8	PAINTED	THAMES	
46100838	LANCASTER APPROACH	North Killingholme Parish	513730.71	417319.68	13	7012	00189988	01/04/1981 00:00	4	1	GREATER THAN 50MPH	BACK OF FOOTPATH	1500	SINGLE ARM	NOT APPLICABLE	RIGID COLUMN	URBIS	AXIA 2 S1	PETITJEAN	SHEET STEEL	8	GALVANISED	THAMES	
46100838	LANCASTER APPROACH	North Killingholme Parish	513691.9	417316.91	14	7013	00189989	01/04/1981 00:00	4	1	GREATER THAN 50MPH	FRONT OF FOOTPATH	1500	SINGLE ARM	DARK GREY	RIGID COLUMN	URBIS	AXIA 2 S1	PETITJEAN	SHEET STEEL	8	PAINTED	THAMES	
46100838	LANCASTER APPROACH	North Killingholme Parish	513666.15	417293.97	15	7014	00189990	01/04/1981 00:00	4	1	GREATER THAN 50MPH	BACK OF FOOTPATH	1500	SINGLE ARM	DARK GREY	RIGID COLUMN	URBIS	AXIA 2 S1	PETITJEAN	SHEET STEEL	8	PAINTED	THAMES	
46100838	LANCASTER APPROACH	North Killingholme Parish	513632.67	417293.76	16	7015	00189991	07/02/2019 00:00	4	1	GREATER THAN 50MPH	FRONT OF FOOTPATH	1500	SINGLE ARM	NOT APPLICABLE	RIGID COLUMN	URBIS	AXIA 2 S1	MALLATITE	TUBULAR STEEL	8	GALVANISED	TUBULAR	
46100838	LANCASTER APPROACH	North Killingholme Parish	514087.04	417474.45	2FP	7001	00189977	01/04/1981 00:00	4	1	GREATER THAN 50MPH	FRONT OF FOOTPATH	1500	SINGLE ARM	DARK GREY	RIGID COLUMN	URBIS	AXIA 2 S1	PETITJEAN	SHEET STEEL	8	PAINTED	THAMES	
46100838	LANCASTER APPROACH	North Killingholme Parish	514059.69	417451.61	3	7002	00189978	01/04/1981 00:00	4	1	GREATER THAN 50MPH	BACK OF FOOTPATH	1500	SINGLE ARM	DARK GREY	RIGID COLUMN	URBIS	AXIA 2 S1	PETITJEAN	SHEET STEEL	8	PAINTED	THAMES	
46100838	LANCASTER APPROACH	North Killingholme Parish	514020.2	417447.56	4	7003	00189979	01/04/1981 00:00	4	1	GREATER THAN 50MPH	FRONT OF FOOTPATH	1500	SINGLE ARM	DARK GREY	RIGID COLUMN	URBIS	AXIA 2 S1	PETITJEAN	SHEET STEEL	8	PAINTED	THAMES	
46100838	LANCASTER APPROACH	North Killingholme Parish	513987.71	417423.4	5	7004	00189980	01/04/1981 00:00	4	1	GREATER THAN 50MPH	BACK OF FOOTPATH	1500	SINGLE ARM	DARK GREY	RIGID COLUMN	URBIS	AXIA 2 S1	PETITJEAN	SHEET STEEL	8	PAINTED	THAMES	
46100838	LANCASTER APPROACH	North Killingholme Parish	513951.94	417420.49	6	7005	00189981	01/04/1981 00:00	4	1	GREATER THAN 50MPH	FRONT OF FOOTPATH	1500	SINGLE ARM	DARK GREY	RIGID COLUMN	URBIS	AXIA 2 S1	PETITJEAN	SHEET STEEL	8	PAINTED	THAMES	
46100838	LANCASTER APPROACH	North Killingholme Parish	513923.3	417397.11	7	7006	00189982	01/04/1981 00:00	4	1	GREATER THAN 50MPH	BACK OF FOOTPATH	1500	SINGLE ARM	DARK GREY	RIGID COLUMN	URBIS	AXIA 2 S1	PETITJEAN	SHEET STEEL	8	PAINTED	THAMES	
46100838	LANCASTER APPROACH	North Killingholme Parish	513881.36	417391.71	8	7007	00189983	01/04/1981 00:00	4	1	GREATER THAN 50MPH	FRONT OF FOOTPATH	1500	SINGLE ARM	DARK GREY	RIGID COLUMN	URBIS	AXIA 2 S1	PETITJEAN	SHEET STEEL	8	PAINTED	THAMES	
46100838	LANCASTER APPROACH	North Killingholme Parish	513855.97	417370.04	9	7008	00189984	01/04/1981 00:00	4	1	GREATER THAN 50MPH	BACK OF FOOTPATH	1500	SINGLE ARM	DARK GREY	RIGID COLUMN	URBIS	AXIA 2 S1	PETITJEAN	SHEET STEEL	8	PAINTED	THAMES	
46100839	LANDOR AVENUE	Scunthorpe	487819.6	409357.96	1	7000	00189992	01/04/1993 00:00	5	2	LESS THAN 30MPH	BACK OF FOOTPATH	800	SINGLE ARM	NOT APPLICABLE	RIGID COLUMN	URBIS	AXIA 2 S1	PETITJEAN	SHEET STEEL	6	GALVANISED	DAER	
46100839	LANDOR AVENUE	Scunthorpe	487819.61	409335.43	2	7001	00189993	01/04/1993 00:00	5	2	LESS THAN 30MPH	BACK OF FOOTPATH	800	SINGLE ARM	NOT APPLICABLE	RIGID COLUMN	URBIS	AXIA 2 S1	PETITJEAN	SHEET STEEL	6	GALVANISED	DAER	
46100839	LANDOR AVENUE	Scunthorpe	487810.73	409302.88	4	7003	00189995	01/04/1993 00:00	5	2	LESS THAN 30MPH	BACK OF FOOTPATH	800	SINGLE ARM	NOT APPLICABLE	RIGID COLUMN	URBIS	AXIA 2 S1	PETITJEAN	SHEET STEEL	6	GALVANISED	DAER	
46100840	LANGLEY DRIVE	Bottesford Parish	489113.62	406836.62	1	7000	00189996	01/04/1980 00:00	3	1	LESS THAN 30MPH	BACK OF FOOTPATH	0

46100865	LINDSEY STREET	Scunthorpe	490037.46	410805.19	1	7000	00190170	01/04/1993 00:00	2	4	LESS THAN 30MPH	BACK OF FOOTPATH	0	POST TOP	BLACK	RIGID COLUMN	URBIS	ABBEY	KINGSWOOD	TUBULAR STEEL	5	PAINTED	METRO	
46100865	LINDSEY STREET	Scunthorpe	490034	410829.12	2	7001	00190171	01/04/1993 00:00	2	4	NOT ON A ROAD	OTHER	0	POST TOP	BLACK	RIGID COLUMN	URBIS	ABBEY	KINGSWOOD	TUBULAR STEEL	4	PAINTED	METRO	
46100865	LINDSEY STREET	Scunthorpe	490033.03	410852.63	3	7002	00190172	01/04/1993 00:00	2	4	NOT ON A ROAD	BACK OF FOOTPATH	0	POST TOP	BLACK	RIGID COLUMN	URBIS	ABBEY	KINGSWOOD	TUBULAR STEEL	4	PAINTED	METRO	
46100865	LINDSEY STREET	Scunthorpe	490029.27	410880.52	4	7003	00190173	01/04/1993 00:00	2	4	NOT ON A ROAD	OTHER	0	POST TOP	BLACK	RIGID COLUMN	URBIS	ABBEY	KINGSWOOD	TUBULAR STEEL	4	PAINTED	METRO	
46100866	LINDUM GROVE	Crowle Parish	476924.75	412560.11	1	7000	00190174	01/04/1988 00:00	5	1	LESS THAN 30MPH	VERGE	300	SINGLE ARM	NOT APPLICABLE	RIGID COLUMN	URBIS	AXIA 2 S1	PETITJEAN	SHEET STEEL	5	GALVANISED	DAER	
46100866	LINDUM GROVE	Crowle Parish	476948.14	412529.19	2	7001	00190175	01/04/1988 00:00	5	1	LESS THAN 30MPH	VERGE	300	SINGLE ARM	NOT APPLICABLE	RIGID COLUMN	URBIS	AXIA 2 S1	PETITJEAN	SHEET STEEL	5	GALVANISED	DAER	
46100866	LINDUM GROVE	Crowle Parish	476975.65	412493.99	3	7002	00190176	01/04/1988 00:00	5	1	LESS THAN 30MPH	VERGE	300	SINGLE ARM	NOT APPLICABLE	RIGID COLUMN	URBIS	AXIA 2 S1	PETITJEAN	SHEET STEEL	5	GALVANISED	DAER	
46100867	LINDUM STREET	Scunthorpe	489850.44	411233.92	1BB	7009	00190186	01/04/2013 00:00	4	4	LESS THAN 30MPH	FRONT OF FOOTPATH	0	POST TOP	BLACKWHITE	RIGID COLUMN	WRTL	STELA WIDE 52 LED	MALLATITE	TUBULAR STEEL	6	GALVANISED	TUBULAR	
46100867	LINDUM STREET	Scunthorpe	489744.28	411197.02	1FP	7000	00190177	01/04/1993 00:00	4	4	LESS THAN 30MPH	BACK OF FOOTPATH	800	SINGLE ARM	NOT APPLICABLE	RIGID COLUMN	URBIS	AXIA 2 S1	PETITJEAN	SHEET STEEL	6	GALVANISED	DAER	
46100867	LINDUM STREET	Scunthorpe	489768.25	411203.04	2	7001	00190178	01/04/1993 00:00	4	4	LESS THAN 30MPH	BACK OF FOOTPATH	800	SINGLE ARM	NOT APPLICABLE	RIGID COLUMN	URBIS	AXIA 2 S1	PETITJEAN	SHEET STEEL	6	GALVANISED	DAER	
46100867	LINDUM STREET	Scunthorpe	489853.11	411225.91	2BB	7010	00190187	01/04/2013 00:00	4	4	LESS THAN 30MPH	FRONT OF FOOTPATH	0	POST TOP	BLACKWHITE	RIGID COLUMN	WRTL	STELA WIDE 52 LED	MALLATITE	TUBULAR STEEL	6	GALVANISED	TUBULAR	
46100867	LINDUM STREET	Scunthorpe	489796.01	411209.82	3	7002	00190179	01/04/1993 00:00	4	4	LESS THAN 30MPH	BACK OF FOOTPATH	800	SINGLE ARM	NOT APPLICABLE	RIGID COLUMN	URBIS	AXIA 2 S1	PETITJEAN	SHEET STEEL	6	GALVANISED	DAER	
46100867	LINDUM STREET	Scunthorpe	489826.03	411229.17	4	7003	00190180	01/04/1993 00:00	4	4	LESS THAN 30MPH	BACK OF FOOTPATH	800	SINGLE ARM	NOT APPLICABLE	RIGID COLUMN	URBIS	AXIA 2 S1	PETITJEAN	SHEET STEEL	6	GALVANISED	DAER	
46100867	LINDUM STREET	Scunthorpe	489844.72	411233.75	5FP	7004	00190181	01/04/1993 00:00	4	4	LESS THAN 30MPH	BACK OF FOOTPATH	800	SINGLE ARM	NOT APPLICABLE	RIGID COLUMN	URBIS	AXIA 2 S1	PETITJEAN	SHEET STEEL	6	GALVANISED	DAER	
46100867	LINDUM STREET	Scunthorpe	489872.31	411229.63	6	7005	00190182	01/04/1993 00:00	4	4	LESS THAN 30MPH	BACK OF FOOTPATH	800	SINGLE ARM	NOT APPLICABLE	RIGID COLUMN	URBIS	AXIA 2 S1	PETITJEAN	SHEET STEEL	6	GALVANISED	DAER	
46100867	LINDUM STREET	Scunthorpe	489895.2	411246.8	7FP	7006	00190183	01/04/1993 00:00	4	4	LESS THAN 30MPH	BACK OF FOOTPATH	800	SINGLE ARM	NOT APPLICABLE	RIGID COLUMN	URBIS	AXIA 2 S1	PETITJEAN	SHEET STEEL	6	GALVANISED	DAER	
46100867	LINDUM STREET	Scunthorpe	489924.15	411242.85	8	7007	00190184	01/04/1993 00:00	4	4	LESS THAN 30MPH	BACK OF FOOTPATH	800	SINGLE ARM	NOT APPLICABLE	RIGID COLUMN	URBIS	AXIA 2 S1	PETITJEAN	SHEET STEEL	6	GALVANISED	DAER	
46100867	LINDUM STREET	Scunthorpe	489947.8	411245.9	9	7008	00190185	01/04/1993 00:00	4	4	LESS THAN 30MPH	BACK OF FOOTPATH	800	SINGLE ARM	NOT APPLICABLE	RIGID COLUMN	URBIS	AXIA 2 S1	PETITJEAN	SHEET STEEL	6	GALVANISED	DAER	
46100868	LINNET CLOSE	Scunthorpe	487540.05	412606.49	1	7000	00190188	01/04/1995 00:00	2	3	LESS THAN 30MPH	VERGE	0	POST TOP	NOT APPLICABLE	RIGID COLUMN	URBIS	AXIA 2 S1	PETITJEAN	SHEET STEEL	5	GALVANISED	NIDD	
46100868	LINNET CLOSE	Scunthorpe	487543.89	412634.58	2	7001	00190189	01/04/1995 00:00	2	3	LESS THAN 30MPH	VERGE	0	POST TOP	NOT APPLICABLE	RIGID COLUMN	URBIS	AXIA 2 S1	PETITJEAN	SHEET STEEL	5	GALVANISED	NIDD	
46100868	LINNET CLOSE	Scunthorpe	487547.43	412657.11	3	7002	00190190	01/04/1995 00:00	2	3	LESS THAN 30MPH	VERGE	0	POST TOP	NOT APPLICABLE	RIGID COLUMN	URBIS	AXIA 2 S1	PETITJEAN	SHEET STEEL	5	GALVANISED	NIDD	
46100868	LINNET CLOSE	Scunthorpe	487575.21	412666.66	4	7003	00190191	01/04/1995 00:00	2	3	LESS THAN 30MPH	VERGE	0	POST TOP	NOT APPLICABLE	RIGID COLUMN	URBIS	AXIA 2 S1	PETITJEAN	SHEET STEEL	5	GALVANISED	NIDD	
46100868	LINNET CLOSE	Scunthorpe	487599.21	412654.38	5	7004	00190192	01/04/1995 00:00	2	3	LESS THAN 30MPH	VERGE	0	POST TOP	NOT APPLICABLE	RIGID COLUMN	URBIS	AXIA 2 S1	PETITJEAN	SHEET STEEL	5	GALVANISED	NIDD	
46100868	LINNET CLOSE	Scunthorpe	487621.42	412661.78	6	7005	00190193	01/04/1995 00:00	2	3	LESS THAN 30MPH	VERGE	0	POST TOP	NOT APPLICABLE	RIGID COLUMN	URBIS	AXIA 2 S1	PETITJEAN	SHEET STEEL	5	GALVANISED	NIDD	
46100868	LINNET CLOSE	Scunthorpe	487635.31	412651.94	7	7006	00190194	01/04/1995 00:00	2	3	LESS THAN 30MPH	VERGE	0	POST TOP	NOT APPLICABLE	RIGID COLUMN	URBIS	AXIA 2 S1	PETITJEAN	SHEET STEEL	5	GALVANISED	NIDD	
46100869	LINTON RISE	Burton upon Stather Parish	487029.91	417464.36	1	7001	00190196	01/04/2008 00:00	2	3	LESS THAN 30MPH	BACK OF FOOTPATH	0	POST TOP	NOT APPLICABLE	RIGID COLUMN	URBIS	AXIA 2 S1	MALLATITE	TUBULAR STEEL	6	GALVANISED	STEPPED TUBULAR	
46100869	LINTON RISE	Burton upon Stather Parish	487009.75	417481.58	2	7002	00190197	01/04/2008 00:00	2	3	LESS THAN 30MPH	BACK OF FOOTPATH	0	POST TOP	NOT APPLICABLE	RIGID COLUMN	URBIS	AXIA 2 S1	MALLATITE	TUBULAR STEEL	6	GALVANISED	STEPPED TUBULAR	
46100869	LINTON RISE	Burton upon Stather Parish	486982.42	417470.38	3	7003	00190198	01/04/2008 00:00	2	3	LESS THAN 30MPH	BACK OF FOOTPATH	0	POST TOP	NOT APPLICABLE	RIGID COLUMN	URBIS	AXIA 2 S1	MALLATITE	TUBULAR STEEL	6	GALVANISED	STEPPED TUBULAR	
46100869	LINTON RISE	Burton upon Stather Parish	486948.99	417482.56	4	7004	00190199	01/04/2008 00:00	2	3	LESS THAN 30MPH	BACK OF FOOTPATH	0	POST TOP	NOT APPLICABLE	RIGID COLUMN	URBIS	AXIA 2 S1	MALLATITE	TUBULAR STEEL	6	GALVANISED	STEPPED TUBULAR	
46100869	LINTON RISE	Burton upon Stather Parish	486958.07	417515.95	5	7000	00190195	01/04/2008 00:00	2	3	NOT ON A ROAD	BACK OF FOOTPATH	0	POST TOP	NOT APPLICABLE	MID HINGED	URBIS	AXIA 2 S1	VALMONT ST	SHEET STEEL	5	GALVANISED	LEVEN	
46100870	LISTER ROAD	Scunthorpe	487550.11	411370.18	1	7000	00190202	01/04/1995 00:00	2	3	LESS THAN 30MPH	BACK OF FOOTPATH	800	SINGLE ARM	NOT APPLICABLE	RIGID COLUMN	URBIS	AXIA 2 S1	PETITJEAN	SHEET STEEL	6	GALVANISED	DAER	
46100870	LISTER ROAD	Scunthorpe	487523.21	411380.53	2	7001	00190203	01/04/1995 00:00	2	3	LESS THAN 30MPH	BACK OF FOOTPATH	800	SINGLE ARM	NOT APPLICABLE	RIGID COLUMN	URBIS	AXIA 2 S1	PETITJEAN	SHEET STEEL	6	GALVANISED	DAER	
46100870	LISTER ROAD	Scunthorpe	487495.01	411370.17	3	7002	00190204	01/04/1995 00:00	2	3	LESS THAN 30MPH	BACK OF FOOTPATH	800	SINGLE ARM	NOT APPLICABLE	RIGID COLUMN	URBIS	AXIA 2 S1	PETITJEAN	SHEET STEEL	6	GALVANISED	DAER	
46100870	LISTER ROAD	Scunthorpe	487462.32	411370.13	4	7003	00190205	01/04/1995 00:00	2	3	LESS THAN 30MPH	BACK OF FOOTPATH	800	SINGLE ARM	NOT APPLICABLE	RIGID COLUMN	URBIS	AXIA 2 S1	PETITJEAN	SHEET STEEL	6	GALVANISED	DAER	
46100870	LISTER ROAD	Scunthorpe	487429.66	411370.5	5	7004	00190206	01/04/1995 00:00	2	3	LESS THAN 30MPH	BACK OF FOOTPATH	800	SINGLE ARM	NOT APPLICABLE	RIGID COLUMN	URBIS	AXIA 2 S1	PETITJEAN	SHEET STEEL	6	GALVANISED	DAER	
46100870	LISTER ROAD	Scunthorpe	487398.12	411370.68	6	7005	00190207	01/04/1995 00:00	2	3	LESS THAN 30MPH	BACK OF FOOTPATH	800	SINGLE ARM	NOT APPLICABLE	RIGID COLUMN	URBIS	AXIA 2 S1	PETITJEAN	SHEET STEEL	6	GALVANISED	DAER	
46100870	LISTER ROAD	Scunthorpe	487372.03	411381.03	7	7006	00190208	01/04/1995 00:00	2	3	LESS THAN 30MPH	BACK OF FOOTPATH	800	SINGLE ARM	NOT APPLICABLE	RIGID COLUMN	URBIS	AXIA 2 S1	PETITJEAN	SHEET STEEL	6	GALVANISED	DAER	
46100870	LISTER ROAD	Scunthorpe	487347.75	411372.97	8	7007	00190209	01/04/1995 00:00	2	3	LESS THAN 30MPH	BACK OF FOOTPATH	800	SINGLE ARM	NOT APPLICABLE	RIGID COLUMN	URBIS	AXIA 2 S1	PETITJEAN	SHEET STEEL	6	GALVANISED	DAER	
46100871	LITTLE LANE	Wrawby Parish	501932.64	408803.37	1	7000	00190210	01/04/1980 00:00	6	4	LESS THAN 30MPH	BACK OF FOOTPATH	0	POST TOP	NOT APPLICABLE	RIGID COLUMN	URBIS	AXIA 2 S1	PETITJEAN	SHEET STEEL	5	GALVANISED	NIDD	
46100871	LITTLE LANE	Wrawby Parish	501940.94	408807.87	2	7001	00190211	01/04/1980 00:00	6	4	LESS THAN 30MPH	VERGE	0	POST TOP	NOT APPLICABLE	RIGID COLUMN	URBIS	PILZEO 16 LED 3.19 KLM	PETITJEAN	SHEET STEEL	5	GALVANISED	NIDD	
46100871	LITTLE LANE	Wrawby Parish	501925.33	408837	3	7002	00190212	01/04/1980 00:00	6	4	LESS THAN 30MPH	BACK OF FOOTPATH	0	POST TOP	NOT APPLICABLE	RIGID COLUMN	URBIS	AXIA 2 S1	PETITJEAN	SHEET STEEL	5	GALVANISED	NIDD	
46100871	LITTLE LANE	Wrawby Parish	501907.12	408860.61	4	7003	00190213	01/04/1980 00:00	6	4	LESS THAN 30MPH	BACK OF FOOTPATH	0	POST TOP	NOT APPLICABLE	RIGID COLUMN	URBIS	AXIA 2 S1	PETITJEAN	SHEET STEEL	5	GALVANISED	NIDD	
46100871	LITTLE LANE	Wrawby Parish	501890.74	408889.6	5	7004	00190214	01/04/1980 00:00	6	4	LESS THAN 30MPH	BACK OF FOOTPATH	0	POST TOP	NOT APPLICABLE	RIGID COLUMN	URBIS	AXIA 2 S1	PETITJEAN	SHEET STEEL	5	GALVANISED	NIDD	
46100871	LITTLE LANE	Wrawby Parish	501902.57	408912.62	6	7005	00190215	18/03/2019 00:00	6	4	LESS THAN 30MPH	VERGE	0	POST TOP	NOT APPLICABLE	RIGID COLUMN	URBIS	AXIA 2 S1	MALLATITE	TUBULAR STEEL	6	GALVANISED	TUBULAR	
46100872	LLOYDS AVENUE	Scunthorpe	489141.67	409871.97	1	7000	00190216	01/04/1991 00:00	5	4	LESS THAN 30MPH	FRONT OF FOOTPATH	800	SINGLE ARM	NOT APPLICABLE	RIGID COLUMN	URBIS	AXIA 2 S1	PETITJEAN	SHEET STEEL	6	GALVANISED	DAER	
46100872	LLOYDS AVENUE	Scunthorpe	488921.05	409857	10	7009	00190225	01/04/1991 00:00	5	4	LESS THAN 30MPH	FRONT OF FOOTPATH	800	SINGLE ARM	NOT APPLICABLE	RIGID COLUMN	URBIS	AXIA 2 S1	PETITJEAN	SHEET STEEL	6	GALVANISED	DAER	
46100872	LLOYDS AVENUE	Scunthorpe	488900.34	409866.86	11	7010	00190226	01/04/1991 00:00	5	4	LESS THAN 30MPH	FRONT OF FOOTPATH	800	SINGLE ARM	NOT APPLICABLE	RIGID COLUMN	URBIS	AXIA 2 S1	PETITJEAN	SHEET STEEL	6	GALVANISED	DAER	
46100872	LLOYDS AVENUE	Scunthorpe	488872.43	409865.35	12	7011	00190227	01/04/1991 00:00	5	4	LESS THAN 30MPH	FRONT OF FOOTPATH	800	SINGLE ARM	NOT APPLICABLE	RIGID COLUMN	URBIS	AXIA 2 S1	PETITJEAN	SHEET STEEL	6	GALVANISED	DAER	
46100872	LLOYDS AVENUE	Scunthorpe	488849.41	409852.85	13	7012	00190228	01/04/1991 00:00	5	4	LESS THAN 30MPH	FRONT OF FOOTPATH	800	SINGLE ARM	NOT APPLICABLE	RIGID COLUMN	URBIS	AXIA 2 S1	PETITJEAN	SHEET STEEL	6	GALVANISED	DAER	
46100872	LLOYDS AVENUE	Scunthorpe	488826.45	409862.5	14	7013	00190229	01/04/1991 00:00	5	4	LESS THAN 30MPH	FRONT OF FOOTPATH	800	SINGLE ARM	NOT APPLICABLE	RIGID COLUMN	URBIS	AXIA 2 S1	PETITJEAN	SHEET STEEL	6	GALVANISED	DAER	
46100872	LLOYDS AVENUE	Scunthorpe	488802.32	409860.85	15	7014	00190230	01/04/1991 00:00	5	4	LESS THAN 30MPH	FRONT OF FOOTPATH	800	SINGLE ARM	NOT APPLICABLE	RIGID COLUMN	URBIS	AXIA 2 S1	PETITJEAN	SHEET STEEL	6	GALVANISED	DAER	
46100872	LLOYDS AVENUE	Scunthorpe	488770.13	409847.8	16	7015	00190231	01/04/1991 00:00	5	4	LESS THAN 30MPH	FRONT OF FOOTPATH	800	SINGLE ARM	NOT APPLICABLE	RIGID COLUMN	URBIS	AXIA 2 S1	PETITJEAN	SHEET STEEL	6	GALVANISED	DAER	
46100872	LLOYDS AVENUE	Scunthorpe	488752.29	409857.77	17	7016	00190232	01/04/1991 00:00	5	4	LESS THAN 30MPH	FRONT OF FOOTPATH	800	SINGLE ARM	NOT APPLICABLE	RIGID COLUMN	URBIS	AXIA 2 S1	PETITJEAN	SHEET STEEL	6	GALVANISED	DAER	
46100872	LLOYDS AVENUE	Scunthorpe	488724.76	409856.36	18	7017	00190233	01/04/1991 00:00	5	4	LESS THAN 30MPH	FRONT OF FOOTPATH	800	SINGLE ARM	NOT APPLICABLE	RIGID COLUMN	URBIS	AXIA 2 S1	PETITJEAN	SHEET STEEL	6	GALVANISED	DAER	
46100872	LLOYDS AVENUE	Scunthorpe	488698.48	409846.9	19	7018	00190234	01/04/1991 00:00	5	4	LESS THAN 30MPH	FRONT OF FOOTPATH	800	SINGLE ARM	NOT APPLICABLE	RIGID COLUMN	URBIS	AXIA 2 S1	PETITJEAN	SHEET STEEL	6	GALVANISED	DAER	
46100872	LLOYDS AVENUE	Scunthorpe	489114.79	409880.02	2	7001	00190217	01/04/1991 00:00	5	4	LESS THAN 30MPH	FRONT OF FOOTPATH	800	SINGLE ARM	NOT APPLICABLE	RIGID COLUMN	URBIS	AXIA 2 S1	PETITJEAN	SHEET STEEL	6	GALVANISED	DAER	
46100872	LLOYDS AVENUE	Scunthorpe	488677.52	409857.15	20	7019	00190235	01/04/1991 00:00	5	4	LESS THAN 30MPH	FRONT OF FOOTPATH	800	SINGLE ARM	NOT APPLICABLE	RIGID COLUMN	URBIS	AXIA 2 S1	PETITJEAN	SHEET STEEL	6	GALVANISED	DAER	
46100872	LLOYDS AVENUE	Scunthorpe	488651.42	409858.77	21	7020	00190236	01/04/1991 00:00	5	4	LESS THAN 30MPH	FRONT OF FOOTPATH	800	SINGLE ARM	NOT APPLICABLE	RIGID COLUMN	URBIS	AXIA 2 S1	PETITJEAN	SHEET STEEL	6	GALVANISED	DAER	
46100872	LLOYDS AVENUE	Scunthorpe	488626.11	409861.08	22	7021	00190237	01/04/1991 00:00	5	4	LESS THAN 30MPH	FRONT OF FOOTPATH	800	SINGLE ARM	NOT APPLICABLE	RIGID COLUMN	URBIS	AXIA 2 S1	PETITJEAN	SHEET STEEL	6	GALVANISED	DAER	
46100872	LLOYDS AVENUE	Scunthorpe	488601.74	409855.81	23	7022	00190238	01/04/1991 00:00	5	4	LESS THAN 30MPH	FRONT OF FOOTPATH	800	SINGLE ARM	NOT APPLICABLE	RIGID COLUMN	URBIS	AXIA 2 S1	PETITJEAN	SHEET STEEL	6	GALVANISED	DAER	
46100872	LLOYDS AVENUE	Scunthorpe	488581.59	409867.77	24	7023	00190239	01/04/1991 00:00	5	4	LESS THAN 30MPH	FRONT OF FOOTPATH	800	SINGLE ARM	NOT APPLICABLE	RIGID COLUMN	URBIS	AXIA 2 S1	PETITJEAN	SHEET STEEL	6	GALVANISED	DAER	
46100872	LLOYDS AVENUE	Scunthorpe	488558.33	409873.04	25	7024	00190240	01/04/1991 00:00	5	4	LESS THAN 30MPH	FRONT OF FOOTPATH	800	SINGLE ARM	NOT APPLICABLE	RIGID COLUMN	URBIS	AXIA 2 S1	PETITJEAN	SHEET STEEL	6	GALVANISED	DAER	
46100872	LLOYDS AVENUE	Scunthorpe	488535.15	409879.2	26	7025	00190241	01/04/1991 00:00	5	4	LESS THAN 30MPH	FRONT OF FOOTPATH	800	SINGLE ARM	NOT APPLICABLE	RIGID COLUMN	URBIS	AXIA 2 S1	PETITJEAN	SHEET STEEL	6	GALVANISED	DAER	
46100872	LLOYDS AVENUE	Scunthorpe	488514.42	409886.62	27	7026	00190242	01/04/1991 00:00	5	4	LESS THAN 30MPH	BACK OF FOOTPATH	800	SINGLE ARM	NOT APPLICABLE	RIGID COLUMN	URBIS	AXIA 2 S1	PETITJEAN	SHEET STEEL	6	GALVANISED	DAER	
46100872	LLOYDS AVENUE	Scunthorpe	488492.87	409893.33	28	7027	00190243	01/04/1991 00:00	5	4	LESS THAN 30MPH	FRONT OF FOOTPATH	800	SINGLE ARM	NOT APPLICABLE	RIGID COLUMN	URBIS	AXIA 2 S1	PETITJEAN	SHEET STEEL	6	GALVANISED	DAER	
46100872	LLOYDS AVENUE	Scunthorpe	489086.7	409878.21	3	7002	00190218	01/04/1991 00:00	5	4	LESS THAN 30MPH	FRONT OF FOOTPATH	800	SINGLE ARM	NOT APPLICABLE	RIGID COLUMN	URBIS	AXIA 2 S1	PETITJEAN	SHEET STEEL	6	GALVANISED	DAER	
46100872	LLOYDS AVENUE	Scunthorpe	489062.37	409876.98	4	7003	00190219	01/04/1991 00:00	5	4	LESS THAN 30MPH	FRONT OF FOOTPATH	800	SINGLE ARM	NOT APPLICABLE	RIGID COLUMN	URBIS	AXIA 2 S1	PETITJEAN	SHEET STEEL	6	GALVANISED	DAER	
46100872	LLOYDS AVENUE	Scunthorpe	489041.47	409865.24	5	7004	00190220	01/04/1991 00:00	5	4	LESS THAN 30MPH	FRONT OF FOOTPATH	800	SINGLE ARM	NOT APPLICABLE	RIGID COLUMN	URBIS	AXIA 2 S1	PETITJEAN	SHEET STEEL	6	GALVANISED	DAER	
46100872	LLOYDS AVENUE	Scunthorpe	489017.2	409874.58	6	7005	00190221	01/04/1991 00:00	5	4	LESS THAN 30MPH	FRONT OF FOOTPATH	800	SINGLE ARM	NOT APPLICABLE	RIGID COLUMN	URBIS	AXIA 2 S1	PETITJEAN	SHEET STEEL	6	GALVANISED	DAER	
46100872	LLOYDS AVENUE	Scunthorpe	488996.82	409861.09	7	7006	00190222	01/04/1991 00:00	5	4	LESS THAN 30MPH	FRONT OF FOOTPATH	800	SINGLE ARM	NOT APPLICABLE	RIGID COLUMN	URBIS	AXIA 2 S1	PETITJEAN	SHEET STEEL	6	GALVANISED	DAER	
46100872	LLOYDS AVENUE	Scunthorpe	488967.67	409859.85	8	7007	00190223	01/04/1991 00:00	5	4	LESS THAN 30MPH	FRONT OF FOOTPATH	800	SINGLE ARM	NOT APPLICABLE	RIGID COLUMN	URBIS	AXIA 2 S1	PETITJEAN	SHEET STEEL	6	GALVANISED	DAER	
46100872	LLOYDS AVENUE	Scunthorpe	488947.03	409870.03	9	7008	00190224	01/04/1991 00:00	5	4	LESS THAN 30MPH	FRONT OF FOOTPATH	800	SINGLE ARM	NOT APPLICABLE	RIGID COLUMN	URBIS	AXIA 2 S1	PETITJEAN	SHEET STEEL	6	GALVANISED	DAER	
46100873	LOCKWOOD BANK	Epworth Parish	478655.77	403693.71	1	7000	00190244	06/12/2018 00:00	5	3	LESS THAN 30MPH	BACK OF FOOTPATH	0	POST TOP	NOT APPLICABLE	RIGID COLUMN	URBIS	AXIA 2 S1	MALLATITE	TUBULAR STEEL	6	GALVANISED	TUBULAR	
46100873	LOCKWOOD BANK	Epworth Parish	478821.85	403852.73	10	7009	00190253	06/12/2018 00:00	5	3	LESS THAN 30MPH	BACK OF FOOTPATH	0	POST TOP	NOT APPLICABLE	RIGID COLUMN	URBIS	AXIA 2 S1	MALLATITE	TUBULAR STEEL	6	GALVANISED	TUBULAR	
46100873	LOCKWOOD BANK	Epworth Parish	478846.6	403852.8	11	7010	00190254	01/04/1980 00:00	5	3	LESS THAN 30MPH	BACK OF FOOTPATH	0	POST TOP	NOT APPLICABLE	RIGID COLUMN	URBIS	AXIA 2 S1	PETITJEAN	SHEET STEEL	5	GALVANISED	NIDD	
46100873	LOCKWOOD BANK	Epworth Parish	478881.98	403850.33	12	7011	00190255	01/04/1980 00:00	5	3	LESS THAN 30MPH	BACK OF FOOTPATH	0	POST TOP	NOT APPLICABLE	RIGID COLUMN	URBIS	AXIA 2 S1	PETITJEAN	SHEET STEEL	5	GALVANISED	NIDD	
46100873	LOCKWOOD BANK	Epworth Parish	478908.8	403830.28	13	7012	00190256	01/04/1980 00:00	5	3	LESS THAN 30MPH	BACK OF FOOTPATH	0	POST TOP	NOT APPLICABLE	RIGID COLUMN	URBIS	AXIA 2 S1	PETITJEAN	SHEET STEEL	5	GALVANISED	NIDD	
46100873	LOCKWOOD BANK	Epworth Parish	478914.69	403808.27	14	7013	00190257	01/04/1980 00:00	5	3	LESS THAN 30MPH	BACK OF FOOTPATH	0	POST TOP	NOT APPLICABLE	RIGID COLUMN	URBIS	AXIA 2 S1	PETITJEAN	SHEET STEEL	5	GALVANISED	NIDD	
46100873	LOCKWOOD BANK	Epworth Parish	478907.12	403765.66	15	7014	00190258	01/04/1980 00:00	5	3	LESS THAN 30MPH	VERGE	0	POST TOP	NOT APPLICABLE	RIGID COLUMN	URBIS	AXIA 2 S1	PETITJEAN	SHEET STEEL	5	GALVANISED	NIDD	
46100873	LOCKWOOD BANK	Epworth Parish	478654.78	403721.16	2	7001	00190245	06/12/2018 00:00	5	3	LESS THAN 30MPH	BACK OF FOOTPATH	0	POST TOP	NOT APPLICABLE	RIGID COLUMN	URBIS	AXIA 2 S1	MALLATITE	TUBULAR STEEL	6	GALVANISED	TUBULAR	
46100873	LOCKWOOD BANK	Epworth Parish	478655.19	403763.02	3	7002	00190246	06/12/2018 00:00	5	3	LESS THAN 30MPH	BACK OF FOOTPATH	0	POST TOP	NOT APPLICABLE	RIGID COLUMN	URBIS	AXIA 2 S1	MALLATITE	TUBULAR STEEL	6	GALVANISED	TUBULAR	
46100873	LOCKWOOD BANK	Epworth Parish	478653.71	403799.34	4	7003	00190247	06/12/2018 00:00	5	3	LESS THAN 30MPH	BACK OF FOOTPATH	0	POST TOP	NOT APPLICABLE	RIGID COLUMN	URBIS	AXIA 2 S1	MALLATITE	TUBULAR STEEL	6	GALVANISED	TUBULAR	
46100873	LOCKWOOD BANK	Epworth Parish	478656.33	403825.66	5	7004	00190248	06/12/2018 00:00	5	3	LESS THAN 30MPH	BACK OF FOOTPATH	0	POST TOP	NOT APPLICABLE	RIGID COLUMN	URBIS	AXIA 2 S1	MALLATITE	TUBULAR STEEL	6	GALVANISED	TUBULAR	
46100873	LOCKWOOD BANK	Epworth Parish	478676.69	403849	6	7005	00190249	06/12/2018 00:00	5	3	LESS THAN 30MPH	BACK OF FOOTPATH	0	POST TOP	NOT APPLICABLE	RIGID COLUMN	URBIS	AXIA 2 S1	MALLATITE	TUBULAR STEEL	6	GALVANISED	TUBULAR	
46100873	LOCKWOOD BANK	Epworth Parish	478718.41	403852.06	7	7006	00190250	06/12/2018 00:00	5	3	LESS THAN 30MPH	BACK OF FOOTPATH	0	POST TOP	NOT APPLICABLE	RIGID COLUMN	URBIS	AXIA 2 S1	MALLATITE	TUBULAR STEEL	6	GALVANISED	TUBULAR	
46100873	LOCKWOOD BANK	Epworth Parish	478754.6	403850.95	8	7007	00190251	06/12/2018 00:00	5	3	LESS THAN 30MPH	BACK OF FOOTPATH	0	POST TOP	NOT APPLICABLE	RIGID COLUMN	URBIS	AXIA 2 S1	MALLATITE	TUBULAR STEEL	6	GALVANISED	TUBULAR	
46100873	LOCKWOOD BANK	Epworth Parish	478790.91	403850.95	9	7008	00190252	22/08/2018 00:00	5	3	LESS THAN 30MPH	BACK OF FOOTPATH	0	POST TOP	NOT APPLICABLE	RIGID COLUMN	URBIS	AXIA 2 S1	VALMONT ST	TUBULA

46100897	MAIN STREET	Crowle Parish	478606.72	411711.68	5	7004	00190427	19/11/2018 00:00	5	1	LESS THAN 30MPH	ON POLE	300	SINGLE ARM	DARK GREY	POLE MOUNTED	URBIS	AXIA 2 S1	WOODEN PO	WOOD	5	PAINTED	PUDSEY DIAMOND
46100897	MAIN STREET	Crowle Parish	478627.71	411741.59	6	7005	00190428	19/11/2018 00:00	5	1	LESS THAN 30MPH	ON POLE	300	SINGLE ARM	DARK GREY	POLE MOUNTED	URBIS	AXIA 2 S1	WOODEN PO	WOOD	5	PAINTED	PUDSEY DIAMOND
46100897	MAIN STREET	Crowle Parish	478637.57	411777.9	7	7006	00190429	01/04/1985 00:00	5	1	LESS THAN 30MPH	BACK OF FOOTPATH	300	SINGLE ARM	MID GREY	RIGID COLUMN	URBIS	AXIA 2 S1	PETITJEAN	SHEET STEEL	5	NOT APPLICABI	DAER
46100897	MAIN STREET	Crowle Parish	478644.52	411809.39	8	7007	00190430	01/04/1985 00:00	5	1	LESS THAN 30MPH	BACK OF FOOTPATH	300	SINGLE ARM	MID GREY	RIGID COLUMN	URBIS	AXIA 2 S1	PETITJEAN	SHEET STEEL	5	NOT APPLICABI	DAER
46100897	MAIN STREET	Crowle Parish	478636.75	411859.69	9	7008	00190431	01/04/1985 00:00	5	1	LESS THAN 30MPH	BACK OF FOOTPATH	300	SINGLE ARM	MID GREY	RIGID COLUMN	URBIS	AXIA 2 S1	PETITJEAN	SHEET STEEL	5	NOT APPLICABI	DAER
46100898	FOOTPATH BETWEEN AUSTIN CRESCENT AND MES	Bottesford Parish	488969.75	407300.55	3	7000	00196372	01/04/2008 00:00	3	1	NOT ON A ROAD	BACK OF FOOTPATH	0	POST TOP	NOT APPLICABLE	MID HINGED	URBIS	AXIA 2 S1	PETITJEAN	SHEET STEEL	5	GALVANISED	LEVEN
46100899	MAIN STREET	Keadby with Althorpe Parish	483235.77	409443.66	1	7000	00190434	07/02/2020 00:00	4	3	LESS THAN 30MPH	VERGE	0	POST TOP	NOT APPLICABLE	RIGID COLUMN	URBIS	AXIA 2 S1	MALLATITE	TUBULAR STEEL	6	GALVANISED	TUBULAR
46100899	MAIN STREET	Keadby with Althorpe Parish	483431.76	409646.52	10	7008	00190442	07/02/2020 00:00	4	3	LESS THAN 30MPH	BACK OF FOOTPATH	0	POST TOP	NOT APPLICABLE	RIGID COLUMN	URBIS	AXIA 2 S1	MALLATITE	TUBULAR STEEL	6	GALVANISED	TUBULAR
46100899	MAIN STREET	Keadby with Althorpe Parish	483449.48	409675.55	11	7009	00190443	07/02/2020 00:00	4	3	LESS THAN 30MPH	BACK OF FOOTPATH	0	POST TOP	NOT APPLICABLE	RIGID COLUMN	URBIS	AXIA 2 S1	MALLATITE	TUBULAR STEEL	6	GALVANISED	TUBULAR
46100899	MAIN STREET	Keadby with Althorpe Parish	483477.5	409692.89	12	7010	00190444	07/02/2020 00:00	4	3	LESS THAN 30MPH	BACK OF FOOTPATH	0	POST TOP	NOT APPLICABLE	RIGID COLUMN	URBIS	AXIA 2 S1	MALLATITE	TUBULAR STEEL	6	GALVANISED	TUBULAR
46100899	MAIN STREET	Keadby with Althorpe Parish	483469.81	409721.62	13	7011	00190445	07/02/2020 00:00	4	3	LESS THAN 30MPH	BACK OF FOOTPATH	0	POST TOP	NOT APPLICABLE	RIGID COLUMN	URBIS	AXIA 2 S1	MALLATITE	TUBULAR STEEL	6	GALVANISED	TUBULAR
46100899	MAIN STREET	Keadby with Althorpe Parish	483483.86	409752.33	14	7012	00190446	07/02/2020 00:00	4	3	LESS THAN 30MPH	BACK OF FOOTPATH	0	POST TOP	NOT APPLICABLE	RIGID COLUMN	URBIS	AXIA 2 S1	MALLATITE	TUBULAR STEEL	6	GALVANISED	TUBULAR
46100899	MAIN STREET	Keadby with Althorpe Parish	483520.82	409771.23	15	7013	00190447	07/02/2020 00:00	4	3	LESS THAN 30MPH	BACK OF FOOTPATH	0	POST TOP	NOT APPLICABLE	RIGID COLUMN	URBIS	AXIA 2 S1	MALLATITE	TUBULAR STEEL	6	GALVANISED	TUBULAR
46100899	MAIN STREET	Keadby with Althorpe Parish	483537.87	409788.81	16	7014	00190448	07/02/2020 00:00	4	3	LESS THAN 30MPH	BACK OF FOOTPATH	0	POST TOP	NOT APPLICABLE	RIGID COLUMN	URBIS	AXIA 2 S1	MALLATITE	TUBULAR STEEL	6	GALVANISED	TUBULAR
46100899	MAIN STREET	Keadby with Althorpe Parish	483559.89	409816.81	17	7015	00190449	07/02/2020 00:00	4	3	LESS THAN 30MPH	BACK OF FOOTPATH	0	POST TOP	NOT APPLICABLE	RIGID COLUMN	URBIS	AXIA 2 S1	MALLATITE	TUBULAR STEEL	6	GALVANISED	TUBULAR
46100899	MAIN STREET	Keadby with Althorpe Parish	483575.3	409843.95	18	7016	00190450	07/02/2020 00:00	4	3	LESS THAN 30MPH	BACK OF FOOTPATH	0	POST TOP	NOT APPLICABLE	RIGID COLUMN	URBIS	AXIA 2 S1	MALLATITE	TUBULAR STEEL	6	GALVANISED	TUBULAR
46100899	MAIN STREET	Keadby with Althorpe Parish	483587.89	409868.61	19FP	7019	00190453	07/02/2020 00:00	4	3	LESS THAN 30MPH	VERGE	0	POST TOP	NOT APPLICABLE	RIGID COLUMN	URBIS	AXIA 2 S1	MALLATITE	TUBULAR STEEL	6	GALVANISED	TUBULAR
46100899	MAIN STREET	Keadby with Althorpe Parish	483237.46	409457.62	2	7001	00190435	13/04/2019 00:00	4	3	LESS THAN 30MPH	VERGE	0	POST TOP	NOT APPLICABLE	RIGID COLUMN	URBIS	AXIA 2 S1	MALLATITE	TUBULAR STEEL	6	GALVANISED	TUBULAR
46100899	MAIN STREET	Keadby with Althorpe Parish	483606.45	409907.91	20	7017	00190451	07/02/2020 00:00	4	3	LESS THAN 30MPH	BACK OF FOOTPATH	0	POST TOP	NOT APPLICABLE	RIGID COLUMN	URBIS	AXIA 2 S1	MALLATITE	TUBULAR STEEL	6	GALVANISED	TUBULAR
46100899	MAIN STREET	Keadby with Althorpe Parish	483618.46	409931.97	21	7018	00190452	07/02/2020 00:00	4	3	LESS THAN 30MPH	BACK OF FOOTPATH	0	POST TOP	NOT APPLICABLE	RIGID COLUMN	URBIS	AXIA 2 S1	MALLATITE	TUBULAR STEEL	6	GALVANISED	TUBULAR
46100899	MAIN STREET	Keadby with Althorpe Parish	483630.29	409994.38	22	7021	00190455	03/09/2020 00:00	4	3	GREATER THAN 50MPH	ON POLE	300	SINGLE ARM	NOT APPLICABLE	POLE MOUNTED	URBIS	AXIA 2 S1	WOODEN PO	WOOD	5	NOT APPLICABI	Not Applicable
46100899	MAIN STREET	Keadby with Althorpe Parish	483636.88	410039.7	23	7022	00190456	01/04/1988 00:00	4	3	GREATER THAN 50MPH	ON POLE	300	SINGLE ARM	NOT APPLICABLE	POLE MOUNTED	URBIS	AXIA 2 S1	WOODEN PO	WOOD	5	NOT APPLICABI	Not Applicable
46100899	MAIN STREET	Keadby with Althorpe Parish	483645.44	410090.76	24	7023	00190457	01/04/1988 00:00	4	3	GREATER THAN 50MPH	ON POLE	300	SINGLE ARM	NOT APPLICABLE	POLE MOUNTED	URBIS	AXIA 2 S1	WOODEN PO	WOOD	5	NOT APPLICABI	Not Applicable
46100899	MAIN STREET	Keadby with Althorpe Parish	483654.27	410138.59	25	7024	00190458	18/04/2018 00:00	4	3	GREATER THAN 50MPH	ON POLE	300	SINGLE ARM	NOT APPLICABLE	POLE MOUNTED	URBIS	AXIA 2 S1	WOODEN PO	WOOD	5	NOT APPLICABI	PUDSEY DIAMOND
46100899	MAIN STREET	Keadby with Althorpe Parish	483662.11	410186.57	26	7025	00190459	18/04/2018 00:00	4	3	GREATER THAN 50MPH	ON POLE	300	SINGLE ARM	NOT APPLICABLE	POLE MOUNTED	URBIS	AXIA 2 S1	WOODEN PO	WOOD	5	NOT APPLICABI	PUDSEY DIAMOND
46100899	MAIN STREET	Keadby with Althorpe Parish	483670.38	410233.77	27	7026	00190460	07/02/2020 00:00	4	3	GREATER THAN 50MPH	BACK OF FOOTPATH	0	POST TOP	NOT APPLICABLE	RIGID COLUMN	URBIS	AXIA 2 S1	MALLATITE	TUBULAR STEEL	6	GALVANISED	TUBULAR
46100899	MAIN STREET	Keadby with Althorpe Parish	483678.48	410283.54	28	7027	00190461	09/10/2017 00:00	4	3	GREATER THAN 50MPH	ON POLE	300	SINGLE ARM	NOT APPLICABLE	POLE MOUNTED	URBIS	AXIA 2 S1	WOODEN PO	WOOD	5	NOT APPLICABI	PUDSEY DIAMOND
46100899	MAIN STREET	Keadby with Althorpe Parish	483686.57	410332.83	29	7028	00190462	18/04/2018 00:00	4	3	GREATER THAN 50MPH	ON POLE	300	SINGLE ARM	NOT APPLICABLE	POLE MOUNTED	URBIS	AXIA 2 S1	WOODEN PO	WOOD	5	NOT APPLICABI	PUDSEY DIAMOND
46100899	MAIN STREET	Keadby with Althorpe Parish	483263.2	409466.75	3FP	7020	00190454	13/04/2019 00:00	4	3	LESS THAN 30MPH	BACK OF FOOTPATH	0	POST TOP	NOT APPLICABLE	RIGID COLUMN	URBIS	AXIA 2 S1	MALLATITE	TUBULAR STEEL	6	GALVANISED	TUBULAR
46100899	MAIN STREET	Keadby with Althorpe Parish	483299.51	409477.19	4	7002	00190436	07/02/2020 00:00	4	3	LESS THAN 30MPH	BACK OF FOOTPATH	0	POST TOP	NOT APPLICABLE	RIGID COLUMN	URBIS	AXIA 2 S1	MALLATITE	TUBULAR STEEL	6	GALVANISED	TUBULAR
46100899	MAIN STREET	Keadby with Althorpe Parish	483334.43	409483.48	5	7003	00190437	15/08/2022 00:00	4	3	LESS THAN 30MPH	VERGE	0	POST TOP	NOT APPLICABLE	RIGID COLUMN	URBIS	AXIA 2 S1	MALLATITE	TUBULAR STEEL	6	GALVANISED	TUBULAR
46100899	MAIN STREET	Keadby with Althorpe Parish	483362.99	409508.93	6	7004	00190438	07/02/2020 00:00	4	3	LESS THAN 30MPH	VERGE	0	POST TOP	NOT APPLICABLE	RIGID COLUMN	URBIS	AXIA 2 S1	MALLATITE	TUBULAR STEEL	6	GALVANISED	TUBULAR
46100899	MAIN STREET	Keadby with Althorpe Parish	483396.07	409541.82	7	7005	00190439	07/02/2020 00:00	4	3	LESS THAN 30MPH	VERGE	0	POST TOP	NOT APPLICABLE	RIGID COLUMN	URBIS	AXIA 2 S1	MALLATITE	TUBULAR STEEL	6	GALVANISED	TUBULAR
46100899	MAIN STREET	Keadby with Althorpe Parish	483411.41	409576.44	8	7006	00190440	07/02/2020 00:00	4	3	LESS THAN 30MPH	BACK OF FOOTPATH	0	POST TOP	NOT APPLICABLE	RIGID COLUMN	URBIS	AXIA 2 S1	MALLATITE	TUBULAR STEEL	6	GALVANISED	TUBULAR
46100899	MAIN STREET	Keadby with Althorpe Parish	483426.63	409613.31	9	7007	00190441	01/04/1973 00:00	4	3	LESS THAN 30MPH	WALL	300	SINGLE ARM	NOT APPLICABLE	WALL MOUNTED	URBIS	AXIA 2 S1	WALL MOUN	NOT APPLICABLE	5	NOT APPLICABI	Not Applicable
46100900	MAIN STREET	Kirmington Parish	510471.01	411377.21	1	7000	00190463	01/04/1988 00:00	3	2	LESS THAN 30MPH	ON POLE	300	SINGLE ARM	NOT APPLICABLE	POLE MOUNTED	URBIS	AXIA 2 S1	WOODEN PO	WOOD	5	NOT APPLICABI	Not Applicable
46100900	MAIN STREET	Kirmington Parish	510513.75	411363.79	2	7001	00190464	01/04/1988 00:00	3	2	LESS THAN 30MPH	ON POLE	300	SINGLE ARM	NOT APPLICABLE	POLE MOUNTED	URBIS	AXIA 2 S1	WOODEN PO	WOOD	5	NOT APPLICABI	Not Applicable
46100900	MAIN STREET	Kirmington Parish	510561.92	411349.9	3	7002	00190465	01/04/1988 00:00	3	2	LESS THAN 30MPH	ON POLE	300	SINGLE ARM	NOT APPLICABLE	POLE MOUNTED	URBIS	AXIA 2 S1	WOODEN PO	WOOD	5	NOT APPLICABI	Not Applicable
46100900	MAIN STREET	Kirmington Parish	510604.12	411337.18	4	7003	00190466	01/04/1988 00:00	3	2	LESS THAN 30MPH	ON POLE	300	SINGLE ARM	NOT APPLICABLE	POLE MOUNTED	URBIS	AXIA 2 S1	WOODEN PO	WOOD	5	NOT APPLICABI	Not Applicable
46100900	MAIN STREET	Kirmington Parish	510641.96	411319.73	5	7004	00190467	01/04/1988 00:00	3	2	LESS THAN 30MPH	ON POLE	300	SINGLE ARM	NOT APPLICABLE	POLE MOUNTED	URBIS	AXIA 2 S1	WOODEN PO	WOOD	5	NOT APPLICABI	Not Applicable
46100901	MAIN STREET	Thornton Curtis Parish	508820.92	417620.76	1	7000	00190468	01/04/1989 00:00	4	1	LESS THAN 30MPH	VERGE	800	SINGLE ARM	LIGHT GREY	RIGID COLUMN	URBIS	AXIA 2 S1	PETITJEAN	SHEET STEEL	6	PAINTED	DAER
46100901	MAIN STREET	Thornton Curtis Parish	508759.26	417849.64	10	7009	00190477	01/04/1989 00:00	4	1	LESS THAN 30MPH	BACK OF FOOTPATH	800	SINGLE ARM	MID GREY	RIGID COLUMN	URBIS	AXIA 2 S1	PETITJEAN	SHEET STEEL	6	PAINTED	DAER
46100901	MAIN STREET	Thornton Curtis Parish	508765.72	417867.66	11	7010	00190478	01/04/1989 00:00	4	1	LESS THAN 30MPH	BACK OF FOOTPATH	300	SINGLE ARM	NOT APPLICABLE	POLE MOUNTED	URBIS	AXIA 2 S1	WOODEN PO	WOOD	5	NOT APPLICABI	Not Applicable
46100901	MAIN STREET	Thornton Curtis Parish	508747.93	417883.58	12	7011	00190479	01/04/1989 00:00	4	1	LESS THAN 30MPH	VERGE	800	SINGLE ARM	MID GREY	RIGID COLUMN	URBIS	AXIA 2 S1	PETITJEAN	SHEET STEEL	6	PAINTED	DAER
46100901	MAIN STREET	Thornton Curtis Parish	508747.93	417910.42	13	7012	00190480	01/04/2014 00:00	4	1	LESS THAN 30MPH	VERGE	0	POST TOP	NOT APPLICABLE	RIGID COLUMN	URBIS	AXIA 2 S1	VALMONT ST	TUBULAR STEEL	6	GALVANISED	TUBULAR
46100901	MAIN STREET	Thornton Curtis Parish	508725.49	417931.48	14	7013	00190481	01/04/1989 00:00	4	1	LESS THAN 30MPH	VERGE	800	SINGLE ARM	MID GREY	RIGID COLUMN	URBIS	AXIA 2 S1	PETITJEAN	SHEET STEEL	6	PAINTED	DAER
46100901	MAIN STREET	Thornton Curtis Parish	508721.14	417952.98	15	7014	00190482	01/04/2014 00:00	4	1	LESS THAN 30MPH	BACK OF FOOTPATH	0	POST TOP	NOT APPLICABLE	RIGID COLUMN	URBIS	AXIA 2 S1	VALMONT ST	TUBULAR STEEL	6	GALVANISED	TUBULAR
46100901	MAIN STREET	Thornton Curtis Parish	508710.84	417968.28	16	7015	00190483	01/04/1989 00:00	4	1	LESS THAN 30MPH	BACK OF FOOTPATH	800	SINGLE ARM	MID GREY	RIGID COLUMN	URBIS	AXIA 2 S1	PETITJEAN	SHEET STEEL	6	PAINTED	DAER
46100901	MAIN STREET	Thornton Curtis Parish	508678.37	417994.33	17	7016	00190484	01/04/1989 00:00	4	1	LESS THAN 30MPH	BACK OF FOOTPATH	800	SINGLE ARM	MID GREY	RIGID COLUMN	URBIS	AXIA 2 S1	PETITJEAN	SHEET STEEL	6	PAINTED	DAER
46100901	MAIN STREET	Thornton Curtis Parish	508651.16	418018.29	18	7017	00190485	01/04/2014 00:00	4	1	LESS THAN 30MPH	BACK OF FOOTPATH	0	POST TOP	NOT APPLICABLE	RIGID COLUMN	URBIS	AXIA 2 S1	VALMONT ST	TUBULAR STEEL	6	GALVANISED	TUBULAR
46100901	MAIN STREET	Thornton Curtis Parish	508634.26	418036.15	19	7018	00190486	01/04/1989 00:00	4	1	LESS THAN 30MPH	BACK OF FOOTPATH	800	SINGLE ARM	MID GREY	RIGID COLUMN	URBIS	AXIA 2 S1	PETITJEAN	SHEET STEEL	6	PAINTED	DAER
46100901	MAIN STREET	Thornton Curtis Parish	508799.15	417649.03	2	7001	00190469	01/04/1989 00:00	4	1	LESS THAN 30MPH	VERGE	800	SINGLE ARM	LIGHT GREY	RIGID COLUMN	URBIS	AXIA 2 S1	PETITJEAN	SHEET STEEL	6	PAINTED	DAER
46100901	MAIN STREET	Thornton Curtis Parish	508617.71	418060.5	20	7019	00190487	01/04/1989 00:00	4	1	LESS THAN 30MPH	BACK OF FOOTPATH	800	SINGLE ARM	MID GREY	RIGID COLUMN	URBIS	AXIA 2 S1	PETITJEAN	SHEET STEEL	6	PAINTED	DAER
46100901	MAIN STREET	Thornton Curtis Parish	508594.01	418087.9	21	7020	00190488	01/04/1989 00:00	4	1	LESS THAN 30MPH	BACK OF FOOTPATH	800	SINGLE ARM	MID GREY	RIGID COLUMN	URBIS	AXIA 2 S1	PETITJEAN	SHEET STEEL	6	PAINTED	DAER
46100901	MAIN STREET	Thornton Curtis Parish	508563.73	418104.13	22	7021	00190489	01/04/1989 00:00	4	1	LESS THAN 30MPH	VERGE	800	SINGLE ARM	MID GREY	RIGID COLUMN	URBIS	AXIA 2 S1	PETITJEAN	SHEET STEEL	6	PAINTED	DAER
46100901	MAIN STREET	Thornton Curtis Parish	508548.75	418125.05	23	7022	00190490	01/04/1989 00:00	4	1	LESS THAN 30MPH	VERGE	800	SINGLE ARM	MID GREY	RIGID COLUMN	URBIS	AXIA 2 S1	PETITJEAN	SHEET STEEL	6	PAINTED	DAER
46100901	MAIN STREET	Thornton Curtis Parish	508537.68	418147.13	24	7023	00190491	01/04/1989 00:00	4	1	LESS THAN 30MPH	VERGE	800	SINGLE ARM	MID GREY	RIGID COLUMN	URBIS	AXIA 2 S1	PETITJEAN	SHEET STEEL	6	PAINTED	DAER
46100901	MAIN STREET	Thornton Curtis Parish	508523.53	418176.6	25	7024	00190492	01/04/1989 00:00	4	1	GREATER THAN 50MPH	VERGE	800	SINGLE ARM	MID GREY	RIGID COLUMN	URBIS	AXIA 2 S1	PETITJEAN	SHEET STEEL	6	PAINTED	DAER
46100901	MAIN STREET	Thornton Curtis Parish	508513.23	418206.57	26	7025	00190493	01/04/1989 00:00	4	1	GREATER THAN 50MPH	VERGE	800	SINGLE ARM	MID GREY	RIGID COLUMN	URBIS	AXIA 2 S1	PETITJEAN	SHEET STEEL	6	PAINTED	DAER
46100901	MAIN STREET	Thornton Curtis Parish	508800.89	417681.29	3	7002	00190470	01/04/1989 00:00	4	1	LESS THAN 30MPH	VERGE	800	SINGLE ARM	LIGHT GREY	RIGID COLUMN	URBIS	AXIA 2 S1	PETITJEAN	SHEET STEEL	6	PAINTED	DAER
46100901	MAIN STREET	Thornton Curtis Parish	508785.28	417718.27	4	7003	00190471	01/04/1989 00:00	4	1	LESS THAN 30MPH	VERGE	800	SINGLE ARM	LIGHT GREY	RIGID COLUMN	URBIS	AXIA 2 S1	PETITJEAN	SHEET STEEL	6	PAINTED	DAER
46100901	MAIN STREET	Thornton Curtis Parish	508793.81	417748.4	5	7004	00190472	01/04/1989 00:00	4	1	LESS THAN 30MPH	BACK OF FOOTPATH	300	SINGLE ARM	NOT APPLICABLE	POLE MOUNTED	URBIS	AXIA 2 S1	WOODEN PO	WOOD	6	NOT APPLICABI	Not Applicable
46100901	MAIN STREET	Thornton Curtis Parish	508783.56	417762.91	6	7005	00190473	01/04/1989 00:00	4	1	LESS THAN 30MPH	VERGE	800	SINGLE ARM	MID GREY	RIGID COLUMN	URBIS	AXIA 2 S1	PETITJEAN	SHEET STEEL	6	PAINTED	DAER
46100901	MAIN STREET	Thornton Curtis Parish	508785.64	417790.55	7	7006	00190474	01/04/1989 00:00	4	1	LESS THAN 30MPH	BACK OF FOOTPATH	300	SINGLE ARM	NOT APPLICABLE	POLE MOUNTED	URBIS	AXIA 2 S1	WOODEN PO	WOOD	5	NOT APPLICABI	Not Applicable
46100901	MAIN STREET	Thornton Curtis Parish	508768.91	417812.93	8	7007	00190475	01/04/1989 00:00	4	1	LESS THAN 30MPH	BACK OF FOOTPATH	800	SINGLE ARM	MID GREY	RIGID COLUMN	URBIS	AXIA 2 S1	PETITJEAN	SHEET STEEL	6	PAINTED	DAER
46100901	MAIN STREET	Thornton Curtis Parish	508775.65	417834.56	9	7008	00190476	01/04/1989 00:00	4	1	LESS THAN 30MPH	BACK OF FOOTPATH	300	SINGLE ARM	NOT APPLICABLE	POLE MOUNTED	URBIS	AXIA 2 S1	WOODEN PO	WOOD	5	NOT APPLICABI	Not Applicable
46100902	MAIN STREET	Whitton Parish	490173.4	424446.86	1	7000	00190494	01/04/2010 00:00	1	3	BETWEEN 30-50 MPH	BACK OF FOOTPATH	0	POST TOP	NOT APPLICABLE	RIGID COLUMN	URBIS	AXIA 2 S1	MALLATITE	TUBULAR STEEL	6	GALVANISED	STEPPED TUBULAR
46100902	MAIN STREET	Whitton Parish	490184.04	424404.02	2	7001	00190495	01/04/2010 00:00	1	3	BETWEEN 30-50 MPH	BACK OF FOOTPATH	0	POST TOP	NOT APPLICABLE	RIGID COLUMN	URBIS	AXIA 2 S1	MALLATITE	TUBULAR STEEL	6	GALVANISED	STEPPED TUBULAR
46100902	MAIN STREET	Whitton Parish	490181.3	424364.2	3	7002	00190496	01/04/2010 00:00	1	3	BETWEEN 30-50 MPH	BACK OF FOOTPATH	0	POST TOP	NOT APPLICABLE	RIGID COLUMN	URBIS	AXIA 2 S1	MALLATITE	TUBULAR STEEL	6	GALVANISED	STEPPED TUBULAR
46100902	MAIN STREET	Whitton Parish	490197.76	424330.38	4	7003	00190497	01/04/2010 00:00	1	3	BETWEEN 30-50 MPH	BACK OF FOOTPATH	0	POST TOP	NOT APPLICABLE	RIGID COLUMN	URBIS	AXIA 2 S1	MALLATITE	TUBULAR STEEL	6	GALVANISED	STEPPED TUBULAR
46100902	MAIN STREET	Whitton Parish	490204.06	424279	5	7004	00190498	01/04/2010 00:00	1	3	BETWEEN 30-50 MPH	BACK OF FOOTPATH	0	POST TOP	NOT APPLICABLE	RIGID COLUMN	URBIS	AXIA 2 S1	MALLATITE	TUBULAR STEEL	6	GALVANISED	STEPPED TUBULAR
46100902	MAIN STREET	Whitton Parish	490189.4	424232.2	6	7005	00190499	01/04/2010 00:00	1	3	BETWEEN 30-50 MPH	BACK OF FOOTPATH	0	POST TOP	NOT APPLICABLE	RIGID COLUMN	URBIS	AXIA 2 S1	MALLATITE	TUBULAR STEEL	6	GALVANISED	STEPPED TUBULAR
46100902	MAIN STREET	Whitton Parish	490177.88	424195.84	7	7006	00190500	01/04/2010 00:00	1	3	BETWEEN 30-50 MPH	BACK OF FOOTPATH	0	POST TOP	NOT APPLICABLE	RIGID COLUMN	URBIS	AXIA 2 S1	MALLATITE	TUBULAR STEEL	6	GALVANISED	STEPPED TUBULAR
46100902	MAIN STREET	Whitton Parish	490172.7	424151.18	8	7007	00190501	01/04/2010 00:00	1	3	BETWEEN 30-50 MPH	BACK OF FOOTPATH	0	POST TOP	NOT APPLICABLE	RIGID COLUMN	URBIS	AXIA 2 S1	MALLATITE	TUBULAR STEEL	6	GALVANISED	STEPPED TUBULAR
46100905	MALLARD ROAD	Scunthorpe	488188.26	408640.78	1	7000	00190502	01/04/2007 00:00	5	2	BETWEEN 30-50 MPH	BACK OF FOOTPATH	0	POST TOP	NOT APPLICABLE	RIGID COLUMN	URBIS	AXIA 2 S1	MALLATITE	TUBULAR STEEL	6	GALVANISED	STEPPED TUBULAR
46100905	MALLARD ROAD	Scunthorpe	488195.26	408671.02	2	7001	00190503	01/04/2007 00:00	5	2	BETWEEN 30-50 MPH	BACK OF FOOTPATH	0	POST TOP	NOT APPLICABLE	RIGID COLUMN	URBIS	AXIA 2 S1	MALLATITE	TUBULAR STEEL	6	GALVANISED	STEPPED TUBULAR
46100905	MALLARD ROAD	Scunthorpe	488219.76	408690.9	3	7002	00190504	01/04/2007 00:00	5	2	BETWEEN 30-50 MPH	BACK OF FOOTPATH	0	POST TOP	NOT APPLICABLE	RIGID COLUMN	URBIS	AXIA 2 S1	MALLATITE	TUBULAR STEEL	6	GALVANISED	STEPPED TUBULAR
46100905	MALLARD ROAD	Scunthorpe	488238.66	408717.22	4	7003	00190505	01/04/2007 00:00	5	2	BETWEEN 30-50 MPH	BACK OF FOOTPATH	0	POST TOP	NOT APPLICABLE	RIGID COLUMN	URBIS	AXIA 2 S1	MALLATITE	TUBULAR STEEL	6	GALVANISED	STEPPED TUBULAR
46100905	MALLARD ROAD	Scunthorpe	488263.72	408714	5	7004	00190506	01/04/2007 00:00	5	2	BETWEEN 30-50 MPH	BACK OF FOOTPATH	0	POST TOP	NOT APPLICABLE	RIGID COLUMN	URBIS	AXIA 2 S1	MALLATITE	TUBULAR STEEL	6	GALVANISED	STEPPED TUBULAR
46100906	MALLING WALK	Bottesford Parish	489610.49	406768.09	1	7000	00190507	01/04/1980 00:00	3	1	LESS THAN 30MPH	BACK OF FOOTPATH	0	POST TOP	MID GREY	RIGID COLUMN	URBIS	AXIA 2 S1	PETITJEAN	SHEET STEEL	5	PAINTED	NIDD
46100906	MALLING WALK	Bottesford Parish	489647.86	406774.54	2	7001	00190508	01/04/1980 00:00	3	1	LESS THAN 30MPH	BACK OF FOOTPATH	0	POST TOP	MID GREY	RIGID COLUMN	URBIS	AXIA 2 S1	PETITJEAN	SHEET STEEL	5	PAINTED	NIDD
46100907	MALLORY ROAD	Scunthorpe	490598.3	408067.99	1FP	7000	00190509	01/04/1980 00:00	1	3	LESS THAN 30MPH	BACK OF FOOTPATH	300	SINGLE ARM	NOT APPLICABLE	RIGID COLUMN	URBIS	AXIA 2 S1	PETITJEAN	SHEET STEEL	5	GALVANISED	DAER
46100908	MALTBY LANE	Barton upon Humber Parish	502918.61	422156.71	1	7000	00190510	01/04/2010 00:00	5	2	LESS THAN 30MPH	BACK OF FOOTPATH	500	SINGLE ARM	BLACK	RIGID COLUMN	URBIS	ALBANY	MALLATITE	TUBULAR STEEL	5	NOT APPLICABI	TUBULAR
46100908	MALTBY LANE	Barton upon Humber Parish	502939.98	422185.44	2	7001	00190511	01/04/1980 00:00	5	2	LESS THAN 30MPH	BACK OF FOOTPATH	300	SINGLE ARM	MID GREY	RIGID COLUMN	URBIS	AXIA 2 S1	PETITJEAN	SHEET STEEL	5	PAINTED	DAER
46100908	MALTBY LANE	Barton upon Humber Parish	502954.47	422210.79	3	7002	00190512	01/04/1980 00:00	5	2	LESS THAN 30MPH	WALL	300	SINGLE ARM	NOT APPLICABLE	WALL MOUNTED	URBIS	AXIA 2 S1	WALL MOUN	NOT APPLICABLE	5	NOT APPLICABI	Not Applicable
46100908	MALTBY LANE	Barton upon Humber Parish	502946.82	422241.38	4	7003	00190513	19/06/2019 00:00	5	2	LESS THAN 30MPH	BACK OF FOOTPATH	0	POST TOP	NOT APPLICABLE	RIGID COLUMN	URBIS	AXIA 2 S1	MALLATITE	TUBULAR STEEL	6	GALVANISED	TUBULAR
46100908	MALTBY LANE	Barton upon Humber Parish	502942.94	422258.43	5	7004	00190514	01/04/1980 00:00	5	2	LESS THAN 30MPH	WALL	500	SINGLE ARM	NOT APPLICABLE	WALL MOUNTED	URBIS	AXIA 2 S1	WALL MOUN	NOT APPLICABLE	5	NOT APPLICABI	Not Applicable
46100908	M

46100924	MANOR ROAD	Bottesford Parish	489666.77	407061.55	20	7019	00190684	01/04/2005 00:00	3	1	BETWEEN 30-50 MPH	BACK OF FOOTPATH	500	SINGLE ARM	NOT APPLICABLE	RIGID COLUMN	URBIS	AXIA 2 S1	MALLATITE	SHEET STEEL	8	GALVANISED	THAMES
46100924	MANOR ROAD	Bottesford Parish	489701.9	407072.3	21	7020	00190685	01/04/2005 00:00	3	1	BETWEEN 30-50 MPH	BACK OF FOOTPATH	500	SINGLE ARM	NOT APPLICABLE	RIGID COLUMN	URBIS	AXIA 2 S1	MALLATITE	SHEET STEEL	8	GALVANISED	THAMES
46100924	MANOR ROAD	Bottesford Parish	489731.1	407083.6	22	7021	00190686	01/04/2005 00:00	3	1	BETWEEN 30-50 MPH	BACK OF FOOTPATH	500	SINGLE ARM	NOT APPLICABLE	RIGID COLUMN	URBIS	AXIA 2 S1	MALLATITE	SHEET STEEL	8	GALVANISED	THAMES
46100924	MANOR ROAD	Bottesford Parish	489771.77	407096.2	23	7022	00190687	01/04/2005 00:00	3	1	BETWEEN 30-50 MPH	BACK OF FOOTPATH	500	SINGLE ARM	NOT APPLICABLE	RIGID COLUMN	URBIS	AXIA 2 S1	MALLATITE	SHEET STEEL	8	GALVANISED	THAMES
46100924	MANOR ROAD	Bottesford Parish	489803.97	407098.3	24	7023	00190688	01/04/2005 00:00	3	1	BETWEEN 30-50 MPH	BACK OF FOOTPATH	500	SINGLE ARM	NOT APPLICABLE	RIGID COLUMN	URBIS	AXIA 2 S1	MALLATITE	SHEET STEEL	8	GALVANISED	THAMES
46100924	MANOR ROAD	Bottesford Parish	489823	407114.05	25	7024	00190689	01/04/2005 00:00	3	1	BETWEEN 30-50 MPH	BACK OF FOOTPATH	500	SINGLE ARM	NOT APPLICABLE	RIGID COLUMN	URBIS	AXIA 2 S1	MALLATITE	SHEET STEEL	8	GALVANISED	THAMES
46100924	MANOR ROAD	Bottesford Parish	489824.27	407143.8	26	7025	00190690	01/04/2005 00:00	3	1	BETWEEN 30-50 MPH	BACK OF FOOTPATH	500	SINGLE ARM	NOT APPLICABLE	RIGID COLUMN	URBIS	AXIA 2 S1	MALLATITE	SHEET STEEL	8	GALVANISED	THAMES
46100924	MANOR ROAD	Bottesford Parish	489830.22	407173.2	27	7026	00190691	01/04/2005 00:00	3	1	BETWEEN 30-50 MPH	BACK OF FOOTPATH	500	SINGLE ARM	NOT APPLICABLE	RIGID COLUMN	URBIS	AXIA 2 S1	MALLATITE	SHEET STEEL	8	GALVANISED	THAMES
46100924	MANOR ROAD	Bottesford Parish	489837.22	407207.15	28	7027	00190692	01/04/2005 00:00	3	1	BETWEEN 30-50 MPH	BACK OF FOOTPATH	500	SINGLE ARM	NOT APPLICABLE	RIGID COLUMN	URBIS	AXIA 2 S1	MALLATITE	SHEET STEEL	8	GALVANISED	THAMES
46100924	MANOR ROAD	Bottesford Parish	489841.77	407234.45	29	7028	00190693	01/04/2005 00:00	3	1	BETWEEN 30-50 MPH	BACK OF FOOTPATH	500	SINGLE ARM	NOT APPLICABLE	RIGID COLUMN	URBIS	AXIA 2 S1	MALLATITE	SHEET STEEL	8	GALVANISED	THAMES
46100924	MANOR ROAD	Bottesford Parish	489118.67	407100.35	3	7002	00190667	01/04/2005 00:00	3	1	BETWEEN 30-50 MPH	BACK OF FOOTPATH	500	SINGLE ARM	NOT APPLICABLE	RIGID COLUMN	URBIS	AXIA 2 S1	MALLATITE	SHEET STEEL	8	GALVANISED	THAMES
46100924	MANOR ROAD	Bottesford Parish	489847.02	407266.65	30	7029	00190694	01/04/2005 00:00	3	1	BETWEEN 30-50 MPH	BACK OF FOOTPATH	500	SINGLE ARM	NOT APPLICABLE	RIGID COLUMN	URBIS	AXIA 2 S1	MALLATITE	SHEET STEEL	8	GALVANISED	THAMES
46100924	MANOR ROAD	Bottesford Parish	489863.82	407298.15	31	7030	00190695	01/04/2005 00:00	3	1	BETWEEN 30-50 MPH	BACK OF FOOTPATH	500	SINGLE ARM	NOT APPLICABLE	RIGID COLUMN	URBIS	AXIA 2 S1	MALLATITE	SHEET STEEL	8	GALVANISED	THAMES
46100924	MANOR ROAD	Bottesford Parish	489870.47	407324.75	32	7031	00190696	01/04/2005 00:00	3	1	BETWEEN 30-50 MPH	BACK OF FOOTPATH	500	SINGLE ARM	NOT APPLICABLE	RIGID COLUMN	URBIS	AXIA 2 S1	MALLATITE	SHEET STEEL	8	GALVANISED	THAMES
46100924	MANOR ROAD	Bottesford Parish	489148.77	407107.4	4	7003	00190668	01/04/2005 00:00	3	1	BETWEEN 30-50 MPH	BACK OF FOOTPATH	500	SINGLE ARM	NOT APPLICABLE	RIGID COLUMN	URBIS	AXIA 2 S1	MALLATITE	SHEET STEEL	8	GALVANISED	THAMES
46100924	MANOR ROAD	Bottesford Parish	489183.77	407110.55	5	7004	00190669	01/04/2005 00:00	3	1	BETWEEN 30-50 MPH	BACK OF FOOTPATH	500	SINGLE ARM	NOT APPLICABLE	RIGID COLUMN	URBIS	AXIA 2 S1	MALLATITE	SHEET STEEL	8	GALVANISED	THAMES
46100924	MANOR ROAD	Bottesford Parish	489218.77	407103.55	6	7005	00190670	01/04/2005 00:00	3	1	BETWEEN 30-50 MPH	BACK OF FOOTPATH	500	SINGLE ARM	NOT APPLICABLE	RIGID COLUMN	URBIS	AXIA 2 S1	MALLATITE	SHEET STEEL	8	GALVANISED	THAMES
46100924	MANOR ROAD	Bottesford Parish	489248.52	407098.65	7	7006	00190671	01/04/2005 00:00	3	1	BETWEEN 30-50 MPH	BACK OF FOOTPATH	500	SINGLE ARM	NOT APPLICABLE	RIGID COLUMN	URBIS	AXIA 2 S1	MALLATITE	SHEET STEEL	8	GALVANISED	THAMES
46100924	MANOR ROAD	Bottesford Parish	489282.82	407094.1	8	7007	00190672	01/04/2005 00:00	3	1	BETWEEN 30-50 MPH	BACK OF FOOTPATH	500	SINGLE ARM	NOT APPLICABLE	RIGID COLUMN	URBIS	AXIA 2 S1	MALLATITE	SHEET STEEL	8	GALVANISED	THAMES
46100924	MANOR ROAD	Bottesford Parish	489315.72	407085	9	7008	00190673	01/04/2005 00:00	3	1	BETWEEN 30-50 MPH	BACK OF FOOTPATH	500	SINGLE ARM	NOT APPLICABLE	RIGID COLUMN	URBIS	AXIA 2 S1	MALLATITE	SHEET STEEL	8	GALVANISED	THAMES
46100925	MANOR ROAD	Crowle Parish	476998.75	412973.84	1	7001	04200553	04/05/2021 00:00	5	1	LESS THAN 30MPH	BACK OF FOOTPATH	0	POST TOP	NOT APPLICABLE	RIGID COLUMN	URBIS	AXIA 2 S1	MALLATITE	TUBULAR STEEL	6	GALVANISED	TUBULAR
46100926	MANSFIELD ROAD	Gunness Parish	486867.84	410952.28	1	7000	00190697	01/04/1980 00:00	2	2	LESS THAN 30MPH	BACK OF FOOTPATH	0	POST TOP	LIGHT GREY	RIGID COLUMN	URBIS	AXIA 2 S1	PETITJEAN	SHEET STEEL	5	PAINTED	NIDD
46100926	MANSFIELD ROAD	Gunness Parish	486828.3	410945.13	2	7001	00190698	01/04/1980 00:00	2	2	LESS THAN 30MPH	BACK OF FOOTPATH	0	POST TOP	LIGHT GREY	RIGID COLUMN	URBIS	AXIA 2 S1	PETITJEAN	SHEET STEEL	5	PAINTED	NIDD
46100926	MANSFIELD ROAD	Gunness Parish	486803.59	410945.43	3	7002	00190699	01/04/1980 00:00	2	2	LESS THAN 30MPH	BACK OF FOOTPATH	0	POST TOP	LIGHT GREY	RIGID COLUMN	URBIS	AXIA 2 S1	PETITJEAN	SHEET STEEL	5	PAINTED	NIDD
46100926	MANSFIELD ROAD	Gunness Parish	486772.56	410957.01	4	7003	00190700	01/04/1980 00:00	2	2	LESS THAN 30MPH	BACK OF FOOTPATH	0	POST TOP	LIGHT GREY	RIGID COLUMN	URBIS	AXIA 2 S1	PETITJEAN	SHEET STEEL	5	PAINTED	NIDD
46100927	MANTON COURT	Hibaldstow Parish	497289.59	403411.98	1	7000	00190701	01/11/2023 00:00	1	4	LESS THAN 30MPH	VERGE	0	POST TOP	NOT APPLICABLE	RIGID COLUMN	URBIS	AXIA 2 S1	MALLATITE	TUBULAR STEEL	6	GALVANISED	MALLATITE
46100927	MANTON COURT	Hibaldstow Parish	497312.87	403413.01	2	7001	00190702	01/11/2023 00:00	1	4	LESS THAN 30MPH	VERGE	0	POST TOP	NOT APPLICABLE	RIGID COLUMN	URBIS	AXIA 2 S1	MALLATITE	TUBULAR STEEL	6	GALVANISED	MALLATITE
46100927	MANTON COURT	Hibaldstow Parish	497323.49	403433.87	3	7002	00190703	01/11/2023 00:00	1	4	LESS THAN 30MPH	VERGE	0	POST TOP	NOT APPLICABLE	RIGID COLUMN	URBIS	AXIA 2 S1	MALLATITE	TUBULAR STEEL	6	GALVANISED	MALLATITE
46100927	MANTON COURT	Hibaldstow Parish	497317.72	403451.2	4	7003	00190704	01/11/2023 00:00	1	4	LESS THAN 30MPH	BACK OF FOOTPATH	0	POST TOP	NOT APPLICABLE	RIGID COLUMN	URBIS	AXIA 2 S1	MALLATITE	TUBULAR STEEL	6	GALVANISED	MALLATITE
46100928	MANTON LANE	Hibaldstow Parish	497492.1	403281.57	1	7000	00190705	01/04/1980 00:00	1	4	LESS THAN 30MPH	VERGE	300	SINGLE ARM	LIGHT GREY	RIGID COLUMN	URBIS	AXIA 2 S1	PETITJEAN	SHEET STEEL	5	PAINTED	DAER
46100928	MANTON LANE	Hibaldstow Parish	497454.53	403276.08	2	7001	00190706	11/10/2019 00:00	1	4	LESS THAN 30MPH	VERGE	0	POST TOP	NOT APPLICABLE	RIGID COLUMN	URBIS	AXIA 2 S1	MALLATITE	TUBULAR STEEL	6	GALVANISED	TUBULAR
46100928	MANTON LANE	Hibaldstow Parish	497415.11	403271.04	3	7002	00190707	01/04/1980 00:00	1	4	LESS THAN 30MPH	VERGE	300	SINGLE ARM	NOT APPLICABLE	RIGID COLUMN	URBIS	AXIA 2 S1	PETITJEAN	SHEET STEEL	5	GALVANISED	DAER
46100929	MAPLE AVENUE	Crowle Parish	477143.44	412391.05	1	7000	00190708	01/04/1995 00:00	5	1	LESS THAN 30MPH	VERGE	0	POST TOP	NOT APPLICABLE	RIGID COLUMN	URBIS	AXIA 2 S1	PETITJEAN	SHEET STEEL	5	GALVANISED	NIDD
46100929	MAPLE AVENUE	Crowle Parish	477345.14	412388.65	10	7009	00190717	01/04/2001 00:00	5	1	LESS THAN 30MPH	BACK OF FOOTPATH	0	POST TOP	NOT APPLICABLE	RIGID COLUMN	URBIS	AXIA 2 S1	MALLATITE	TUBULAR STEEL	5	GALVANISED	STEPPED TUBULAR
46100929	MAPLE AVENUE	Crowle Parish	477163.53	412366.37	2	7001	00190709	01/04/1995 00:00	5	1	LESS THAN 30MPH	VERGE	0	POST TOP	NOT APPLICABLE	RIGID COLUMN	URBIS	AXIA 2 S1	MALLATITE	TUBULAR STEEL	5	GALVANISED	TUBULAR
46100929	MAPLE AVENUE	Crowle Parish	477187.46	412340.56	3	7002	00190710	01/04/2001 00:00	5	1	LESS THAN 30MPH	VERGE	0	POST TOP	NOT APPLICABLE	RIGID COLUMN	URBIS	AXIA 2 S1	MALLATITE	TUBULAR STEEL	5	GALVANISED	STEPPED TUBULAR
46100929	MAPLE AVENUE	Crowle Parish	477217.71	412329.26	4	7003	00190711	01/04/2001 00:00	5	1	LESS THAN 30MPH	VERGE	0	POST TOP	NOT APPLICABLE	RIGID COLUMN	URBIS	AXIA 2 S1	MALLATITE	TUBULAR STEEL	5	GALVANISED	STEPPED TUBULAR
46100929	MAPLE AVENUE	Crowle Parish	477260.76	412347.88	5	7004	00190712	01/04/2001 00:00	5	1	LESS THAN 30MPH	BACK OF FOOTPATH	0	POST TOP	NOT APPLICABLE	RIGID COLUMN	URBIS	AXIA 2 S1	MALLATITE	TUBULAR STEEL	5	GALVANISED	STEPPED TUBULAR
46100929	MAPLE AVENUE	Crowle Parish	477276.1	412352.47	6	7005	00190713	01/04/2001 00:00	5	1	LESS THAN 30MPH	BACK OF FOOTPATH	0	POST TOP	NOT APPLICABLE	RIGID COLUMN	URBIS	AXIA 2 S1	MALLATITE	TUBULAR STEEL	5	GALVANISED	STEPPED TUBULAR
46100929	MAPLE AVENUE	Crowle Parish	477294.13	412330.62	7	7006	00190714	01/04/2001 00:00	5	1	LESS THAN 30MPH	BACK OF FOOTPATH	0	POST TOP	NOT APPLICABLE	RIGID COLUMN	URBIS	AXIA 2 S1	MALLATITE	TUBULAR STEEL	5	GALVANISED	STEPPED TUBULAR
46100929	MAPLE AVENUE	Crowle Parish	477288.11	412383.5	8	7007	00190715	01/04/2001 00:00	5	1	LESS THAN 30MPH	BACK OF FOOTPATH	0	POST TOP	NOT APPLICABLE	RIGID COLUMN	URBIS	AXIA 2 S1	MALLATITE	TUBULAR STEEL	5	GALVANISED	STEPPED TUBULAR
46100929	MAPLE AVENUE	Crowle Parish	477327.39	412401.05	9	7008	00190716	01/04/2001 00:00	5	1	LESS THAN 30MPH	BACK OF FOOTPATH	0	POST TOP	NOT APPLICABLE	RIGID COLUMN	URBIS	AXIA 2 S1	MALLATITE	TUBULAR STEEL	5	GALVANISED	STEPPED TUBULAR
46100931	MAPLE CLOSE	Brigg Parish	501311.93	407080.32	1	7000	00190719	01/04/1993 00:00	2	3	LESS THAN 30MPH	BACK OF FOOTPATH	0	POST TOP	LIGHT GREY	RIGID COLUMN	URBIS	AXIA 2 S1	PETITJEAN	SHEET STEEL	5	PAINTED	NIDD
46100931	MAPLE CLOSE	Brigg Parish	501284.22	407076.48	2	7001	00190720	01/04/1993 00:00	2	3	LESS THAN 30MPH	VERGE	0	POST TOP	LIGHT GREY	RIGID COLUMN	URBIS	AXIA 2 S1	PETITJEAN	SHEET STEEL	5	PAINTED	NIDD
46100931	MAPLE CLOSE	Brigg Parish	501268.29	407101.25	3	7002	00190721	01/04/1993 00:00	2	3	LESS THAN 30MPH	VERGE	0	POST TOP	NOT APPLICABLE	RIGID COLUMN	URBIS	AXIA 2 S1	PETITJEAN	SHEET STEEL	5	GALVANISED	NIDD
46100931	MAPLE CLOSE	Brigg Parish	501270.83	407128	4	7003	00190722	01/04/1993 00:00	2	3	LESS THAN 30MPH	VERGE	0	POST TOP	NOT APPLICABLE	RIGID COLUMN	URBIS	AXIA 2 S1	PETITJEAN	SHEET STEEL	5	GALVANISED	NIDD
46100931	MAPLE CLOSE	Brigg Parish	501276.14	407141.56	5	7004	00190723	01/04/1993 00:00	2	3	LESS THAN 30MPH	VERGE	0	POST TOP	NOT APPLICABLE	RIGID COLUMN	URBIS	AXIA 2 S1	PETITJEAN	SHEET STEEL	5	GALVANISED	NIDD
46100931	MAPLE CLOSE	Brigg Parish	501254.91	407125.05	6	7005	00190724	01/04/1993 00:00	2	3	LESS THAN 30MPH	VERGE	0	POST TOP	NOT APPLICABLE	RIGID COLUMN	URBIS	AXIA 2 S1	PETITJEAN	SHEET STEEL	5	GALVANISED	NIDD
46100931	MAPLE CLOSE	Brigg Parish	501224.69	407118.12	7	7006	00190725	01/04/1993 00:00	2	3	LESS THAN 30MPH	VERGE	0	POST TOP	NOT APPLICABLE	RIGID COLUMN	URBIS	AXIA 2 S1	PETITJEAN	SHEET STEEL	5	GALVANISED	NIDD
46100931	MAPLE CLOSE	Brigg Parish	501201.03	407108.51	8	7007	00190726	01/04/1980 00:00	2	3	LESS THAN 30MPH	VERGE	0	POST TOP	NOT APPLICABLE	RIGID COLUMN	URBIS	AXIA 2 S1	PETITJEAN	SHEET STEEL	5	GALVANISED	NIDD
46100931	MAPLE CLOSE	Brigg Parish	501229.93	407095.24	9	7008	00190727	01/04/1980 00:00	2	3	LESS THAN 30MPH	VERGE	0	POST TOP	NOT APPLICABLE	RIGID COLUMN	URBIS	AXIA 2 S1	PETITJEAN	SHEET STEEL	5	GALVANISED	NIDD
46100932	MAPLE TREE CLOSE EAST	Scunthorpe	489453.02	410194.58	1	7000	00190728	01/04/2013 00:00	2	4	LESS THAN 30MPH	VERGE	0	POST TOP	NOT APPLICABLE	RIGID COLUMN	URBIS	AXIA 2 S1	MALLATITE	TUBULAR STEEL	6	GALVANISED	TUBULAR
46100932	MAPLE TREE CLOSE EAST	Scunthorpe	489484.59	410182.82	2	7001	00190729	01/04/2005 00:00	2	4	LESS THAN 30MPH	VERGE	300	SINGLE ARM	NOT APPLICABLE	RIGID COLUMN	URBIS	AXIA 2 S1	CU	TUBULAR STEEL	5	GALVANISED	STEPPED TUBULAR
46100933	MAPLE TREE CLOSE WEST	Scunthorpe	489420.2	410191.7	1	7000	00190730	01/04/2014 00:00	2	4	LESS THAN 30MPH	BACK OF FOOTPATH	0	POST TOP	NOT APPLICABLE	RIGID COLUMN	WRTL	STELA LONG 10 LED	MALLATITE	TUBULAR STEEL	6	GALVANISED	TUBULAR
46100933	MAPLE TREE CLOSE WEST	Scunthorpe	489380.6	410198.8	2	7001	00190731	01/04/2014 00:00	2	4	LESS THAN 30MPH	BACK OF FOOTPATH	0	POST TOP	NOT APPLICABLE	RIGID COLUMN	WRTL	STELA LONG 10 LED	MALLATITE	TUBULAR STEEL	6	GALVANISED	TUBULAR
46100934	MAPLE TREE WAY	Scunthorpe	489487.8	410463.51	1	7000	00190732	01/04/2012 00:00	2	4	LESS THAN 30MPH	BACK OF FOOTPATH	0	POST TOP	NOT APPLICABLE	RIGID COLUMN	URBIS	AXIA 2 S1	MALLATITE	TUBULAR STEEL	6	GALVANISED	TUBULAR
46100934	MAPLE TREE WAY	Scunthorpe	489442.27	410182.31	10	7009	00190741	01/04/2012 00:00	2	4	LESS THAN 30MPH	BACK OF FOOTPATH	0	POST TOP	NOT APPLICABLE	RIGID COLUMN	URBIS	AXIA 2 S1	MALLATITE	TUBULAR STEEL	6	GALVANISED	TUBULAR
46100934	MAPLE TREE WAY	Scunthorpe	489439.15	410157.74	11	7010	00190742	01/04/2012 00:00	2	4	LESS THAN 30MPH	BACK OF FOOTPATH	0	POST TOP	NOT APPLICABLE	RIGID COLUMN	URBIS	AXIA 2 S1	MALLATITE	TUBULAR STEEL	6	GALVANISED	TUBULAR
46100934	MAPLE TREE WAY	Scunthorpe	489437.81	410125.73	12	7011	00190743	01/04/2012 00:00	2	4	LESS THAN 30MPH	BACK OF FOOTPATH	0	POST TOP	NOT APPLICABLE	RIGID COLUMN	URBIS	AXIA 2 S1	MALLATITE	TUBULAR STEEL	6	GALVANISED	TUBULAR
46100934	MAPLE TREE WAY	Scunthorpe	489430.82	410087.99	13	7012	00190744	01/04/2012 00:00	2	4	LESS THAN 30MPH	BACK OF FOOTPATH	0	POST TOP	NOT APPLICABLE	RIGID COLUMN	URBIS	AXIA 2 S1	MALLATITE	TUBULAR STEEL	6	GALVANISED	TUBULAR
46100934	MAPLE TREE WAY	Scunthorpe	489483.84	410427.17	2	7001	00190733	01/04/2012 00:00	2	4	LESS THAN 30MPH	FRONT OF FOOTPATH	0	POST TOP	NOT APPLICABLE	RIGID COLUMN	URBIS	AXIA 2 S1	MALLATITE	TUBULAR STEEL	6	GALVANISED	TUBULAR
46100934	MAPLE TREE WAY	Scunthorpe	489493.53	410399.77	3	7002	00190734	01/04/2012 00:00	2	4	LESS THAN 30MPH	FRONT OF FOOTPATH	0	POST TOP	NOT APPLICABLE	RIGID COLUMN	URBIS	AXIA 2 S1	MALLATITE	TUBULAR STEEL	6	GALVANISED	TUBULAR
46100934	MAPLE TREE WAY	Scunthorpe	489491.47	410370.53	4	7003	00190735	01/04/2012 00:00	2	4	LESS THAN 30MPH	FRONT OF FOOTPATH	0	POST TOP	NOT APPLICABLE	RIGID COLUMN	URBIS	AXIA 2 S1	MALLATITE	TUBULAR STEEL	6	GALVANISED	TUBULAR
46100934	MAPLE TREE WAY	Scunthorpe	489484.36	410339.8	5	7004	00190736	01/04/2012 00:00	2	4	LESS THAN 30MPH	FRONT OF FOOTPATH	0	POST TOP	NOT APPLICABLE	RIGID COLUMN	URBIS	AXIA 2 S1	MALLATITE	TUBULAR STEEL	6	GALVANISED	TUBULAR
46100934	MAPLE TREE WAY	Scunthorpe	489465.88	410306.61	6	7005	00190737	01/04/2012 00:00	2	4	LESS THAN 30MPH	FRONT OF FOOTPATH	0	POST TOP	NOT APPLICABLE	RIGID COLUMN	URBIS	AXIA 2 S1	MALLATITE	TUBULAR STEEL	6	GALVANISED	TUBULAR
46100934	MAPLE TREE WAY	Scunthorpe	489465.25	410279.1	7	7006	00190738	01/04/2012 00:00	2	4	LESS THAN 30MPH	BACK OF FOOTPATH	0	POST TOP	NOT APPLICABLE	RIGID COLUMN	URBIS	AXIA 2 S1	MALLATITE	TUBULAR STEEL	6	GALVANISED	TUBULAR
46100934	MAPLE TREE WAY	Scunthorpe	489444.93	410246.07	8	7007	00190739	01/04/2012 00:00	2	4	LESS THAN 30MPH	BACK OF FOOTPATH	0	POST TOP	NOT APPLICABLE	RIGID COLUMN	URBIS	AXIA 2 S1	MALLATITE	TUBULAR STEEL	6	GALVANISED	TUBULAR
46100934	MAPLE TREE WAY	Scunthorpe	489447.3	410210	9	7008	00190740	01/04/2012 00:00	2	4	LESS THAN 30MPH	BACK OF FOOTPATH	0	POST TOP	NOT APPLICABLE	RIGID COLUMN	URBIS	AXIA 2 S1	MALLATITE	TUBULAR STEEL	6	GALVANISED	TUBULAR
46100935	MARCH STREET	Kirton in Lindsey Parish	493556.38	398572.69	1	7000	00190745	01/04/1980 00:00	1	3	LESS THAN 30MPH	BACK OF FOOTPATH	0	POST TOP	LIGHT GREY	RIGID COLUMN	URBIS	AXIA 2 S1	PETITJEAN	SHEET STEEL	5	PAINTED	NIDD
46100935	MARCH STREET	Kirton in Lindsey Parish	493533.59	398606.47	2	7001	00190746	01/04/1980 00:00	1	3	LESS THAN 30MPH	BACK OF FOOTPATH	0	POST TOP	LIGHT GREY	RIGID COLUMN	URBIS	AXIA 2 S1	PETITJEAN	SHEET STEEL	5	PAINTED	NIDD
46100935	MARCH STREET	Kirton in Lindsey Parish	493516.59	398625.55	3	7002	00190747	01/04/1980 00:00	1	3	LESS THAN 30MPH	BACK OF FOOTPATH	0	POST TOP	LIGHT GREY	RIGID COLUMN	URBIS	AXIA 2 S1	PETITJEAN	SHEET STEEL	5	PAINTED	NIDD
46100935	MARCH STREET	Kirton in Lindsey Parish	493498.66	398665.04	4	7003	00190748	01/04/1980 00:00	1	3	LESS THAN 30MPH	BACK OF FOOTPATH	0	POST TOP	LIGHT GREY	RIGID COLUMN	URBIS	AXIA 2 S1	PETITJEAN	SHEET STEEL	5	PAINTED	NIDD
46100935	MARCH STREET	Kirton in Lindsey Parish	493484.41	398696.39	5	7004	00190749	01/04/1980 00:00	1	3	LESS THAN 30MPH	BACK OF FOOTPATH	0	POST TOP	LIGHT GREY	RIGID COLUMN	URBIS	AXIA 2 S1	PETITJEAN	SHEET STEEL	5	PAINTED	NIDD
46100935	MARCH STREET	Kirton in Lindsey Parish	493468.15	398728.38	6	7005	00190750	01/04/1980 00:00	1	3	LESS THAN 30MPH	BACK OF FOOTPATH	0	POST TOP	LIGHT GREY	RIGID COLUMN	URBIS	AXIA 2 S1	PETITJEAN	SHEET STEEL	5	PAINTED	NIDD
46100935	MARCH STREET	Kirton in Lindsey Parish	493451.67	398748.43	7	7006	00190751	01/04/1980 00:00	1	3	LESS THAN 30MPH	BACK OF FOOTPATH	0	POST TOP	LIGHT GREY	RIGID COLUMN	URBIS	AXIA 2 S1	PETITJEAN	SHEET STEEL	5	PAINTED	NIDD
46100936	MARGARET AVENUE	Keadby with Althorpe Parish	483465.48	410991.44	1	7000	00190752	01/04/1988 00:00	4	3	LESS THAN 30MPH	BACK OF FOOTPATH	300	SINGLE ARM	NOT APPLICABLE	RIGID COLUMN	URBIS	AXIA 2 S1	PETITJEAN	SHEET STEEL	5	GALVANISED	DAER
46100936	MARGARET AVENUE	Keadby with Althorpe Parish	483430.52	410995.16	2	7001	00190753	01/04/1988 00:00	4	3	LESS THAN 30MPH	BACK OF FOOTPATH	300	SINGLE ARM	NOT APPLICABLE	RIGID COLUMN	URBIS	AXIA 2 S1	PETITJEAN	SHEET STEEL	5	GALVANISED	DAER
46100936	MARGARET AVENUE	Keadby with Althorpe Parish	483406.31	410995.08	3	7002	00190754	20/12/2019 00:00	4	3	LESS THAN 30MPH	VERGE	0	POST TOP	NOT APPLICABLE	RIGID COLUMN	URBIS	AXIA 2 S1	MALLATITE	TUBULAR STEEL	6	GALVANISED	TUBULAR
46100937	MARGRAVE LANE	Garthorpe and Fockerby Parish	484802.18	418915.86	1	7000	00190755	01/04/1991 00:00	6	1	LESS THAN 30MPH	BACK OF FOOTPATH	0	POST TOP	NOT APPLICABLE	RIGID COLUMN	URBIS	AXIA 2 S1	FABRIKAT	TUBULAR STEEL	5	GALVANISED	5M01A
46100937	MARGRAVE LANE	Garthorpe and Fockerby Parish	484825.78	418896.56	2	7001	00190756	01/04/1991 00:00	6	1	LESS THAN 30MPH	BACK OF FOOTPATH	0	POST TOP	NOT APPLICABLE	RIGID COLUMN	URBIS	AXIA 2 S1	FABRIKAT	TUBULAR STEEL	5	GALVANISED	5M01A
46100937	MARGRAVE LANE	Garthorpe and Fockerby Parish	484860.42	418876.05	3	7002	00190757	01/04/1991 00:00	6	1	LESS THAN 30MPH	BACK OF FOOTPATH	0	POST TOP	NOT APPLICABLE	RIGID COLUMN	URBIS	AXIA 2 S1	FABRIKAT	TUBULAR STEEL	5	GALVANISED	5M01A
46100937	MARGRAVE LANE	Garthorpe and Fockerby Parish	484883.54	418853.77	4	7003	00190758	01/04/1991 00:00	6	1	LESS THAN 30MPH	VERGE	0	POST TOP	NOT APPLICABLE	RIGID COLUMN	URBIS	AXIA 2 S1	FABRIKAT	TUBULAR STEEL	5	GALVANISED	5M01A
46100937	MARGRAVE LANE	Garthorpe and Fockerby Parish	484910.5	418836.77	5	7004	00190759	01/04/1991 00:00	6	1	LESS THAN 30MPH	VERGE	0	POST TOP	NOT APPLICABLE	RIGID COLUMN	URBIS	AXIA 2 S1	FABRIKAT	TUBULAR STEEL	5	GALVANISED	5M01A
46100937	MARGRAVE LANE	Garthorpe and Fockerby Parish	484948.8	418819.76	6	7005	00190760	01/04/2010 00:00	6	1	LESS THAN 30MPH	ON POLE	300	SINGLE ARM	NOT APPLICABLE	POLE MOUNTED	URBIS	AXIA 2 S1	WOODEN PO	WOOD	5	NOT APPLICABI	Not Applicable
46100937	MARGRAVE LANE	Garthorpe and Fockerby Parish	484981.22	418833.38	7	7006	00190761	27/02/2017 00:00	6	1	LESS THAN 30MPH	ON POLE	300	SINGLE ARM	NOT APPLICABLE	POLE MOUNTED	URBIS	AXIA 2 S1	WOODEN PO	WOOD	5	NOT APPLICABI	Not Applicable
46100937	MARGRAVE LANE	Garthorpe and Fockerby Parish	485021.08	418823.7	8	7007	00190762	22/11/2018 00:00	6	1	LESS THAN 30MPH	ON POLE	300	SINGLE ARM	DARK GREY	POLE MOUNTED	URBIS	AXIA 2 S1	WOODEN PO	WOOD	5	PAINTED	PUDSEY DIAMOND
46100939	MARKET HILL	Winteringham Parish	493143.29	422126.31	1	7000	00190763	01/04/1993 00:00	1	3	LESS THAN 30MPH	VERGE	800	SINGLE ARM	NOT APPLICABLE	RIGID

46100969	MEADOW COURT	Hibaldstow Parish	497878.86	402288.71	5	7004	00190937	01/04/1989 00:00	1	4	NOT ON A ROAD	BACK OF FOOTPATH	0	POST TOP	LIGHT GREY	RIGID COLUMN	URBIS	AXIA 2 S1	PETITJEAN	SHEET STEEL	5	PAINTED	NIDD
46100969	MEADOW COURT	Hibaldstow Parish	497850.17	402328.45	6	7005	00190938	01/04/1995 00:00	1	4	LESS THAN 30MPH	BACK OF FOOTPATH	0	POST TOP	NOT APPLICABLE	RIGID COLUMN	URBIS	AXIA 2 S1	PETITJEAN	SHEET STEEL	5	GALVANISED	NIDD
46100969	MEADOW COURT	Hibaldstow Parish	497856.64	402353.74	7	7006	00190939	01/04/1995 00:00	1	4	LESS THAN 30MPH	VERGE	0	POST TOP	NOT APPLICABLE	RIGID COLUMN	URBIS	AXIA 2 S1	PETITJEAN	SHEET STEEL	5	GALVANISED	NIDD
46100969	MEADOW COURT	Hibaldstow Parish	497844.52	402372.45	8	7007	00190940	01/04/1995 00:00	1	4	LESS THAN 30MPH	VERGE	0	POST TOP	NOT APPLICABLE	RIGID COLUMN	URBIS	AXIA 2 S1	PETITJEAN	SHEET STEEL	5	GALVANISED	NIDD
46100969	MEADOW COURT	Hibaldstow Parish	497862.29	402377.04	9	7008	00190941	01/04/1995 00:00	1	4	LESS THAN 30MPH	VERGE	0	POST TOP	NOT APPLICABLE	RIGID COLUMN	URBIS	AXIA 2 S1	PETITJEAN	SHEET STEEL	5	GALVANISED	NIDD
46100970	MEADOW ROAD	Scunthorpe	487457.68	408463.02	1	7000	00190942	19/10/2020 00:00	5	2	LESS THAN 30MPH	BACK OF FOOTPATH	0	POST TOP	NOT APPLICABLE	RIGID COLUMN	URBIS	AXIA 2 S1	MALLATITE	TUBULAR STEEL	6	GALVANISED	TUBULAR
46100970	MEADOW ROAD	Scunthorpe	487452.3	408761.37	10	7009	00190951	01/04/2013 00:00	5	2	LESS THAN 30MPH	VERGE	0	POST TOP	NOT APPLICABLE	RIGID COLUMN	URBIS	AXIA 2 S1	MALLATITE	TUBULAR STEEL	6	NOT APPLICABI	TUBULAR
46100970	MEADOW ROAD	Scunthorpe	487464.58	408499.7	2	7001	00190943	01/04/2013 00:00	5	2	LESS THAN 30MPH	VERGE	0	POST TOP	NOT APPLICABLE	RIGID COLUMN	URBIS	AXIA 2 S1	MALLATITE	TUBULAR STEEL	6	GALVANISED	TUBULAR
46100970	MEADOW ROAD	Scunthorpe	487451.67	408536.27	3	7002	00190944	19/10/2020 00:00	5	2	LESS THAN 30MPH	BACK OF FOOTPATH	0	POST TOP	NOT APPLICABLE	RIGID COLUMN	URBIS	AXIA 2 S1	MALLATITE	TUBULAR STEEL	6	GALVANISED	TUBULAR
46100970	MEADOW ROAD	Scunthorpe	487457.33	408566.69	4	7003	00190945	19/10/2020 00:00	5	2	LESS THAN 30MPH	VERGE	0	POST TOP	NOT APPLICABLE	RIGID COLUMN	URBIS	AXIA 2 S1	MALLATITE	TUBULAR STEEL	6	GALVANISED	TUBULAR
46100970	MEADOW ROAD	Scunthorpe	487448.9	408599.49	5	7004	00190946	01/04/2013 00:00	5	2	LESS THAN 30MPH	BACK OF FOOTPATH	0	POST TOP	NOT APPLICABLE	RIGID COLUMN	URBIS	AXIA 2 S1	MALLATITE	TUBULAR STEEL	6	GALVANISED	TUBULAR
46100970	MEADOW ROAD	Scunthorpe	487456.1	408629.58	6	7005	00190947	19/10/2020 00:00	5	2	LESS THAN 30MPH	VERGE	0	POST TOP	NOT APPLICABLE	RIGID COLUMN	URBIS	AXIA 2 S1	MALLATITE	TUBULAR STEEL	6	GALVANISED	TUBULAR
46100970	MEADOW ROAD	Scunthorpe	487446.25	408663.52	7	7006	00190948	19/10/2020 00:00	5	2	LESS THAN 30MPH	BACK OF FOOTPATH	0	POST TOP	NOT APPLICABLE	RIGID COLUMN	URBIS	AXIA 2 S1	MALLATITE	TUBULAR STEEL	6	GALVANISED	TUBULAR
46100970	MEADOW ROAD	Scunthorpe	487453.88	408699.03	8	7007	00190949	01/04/2005 00:00	5	2	LESS THAN 30MPH	BACK OF FOOTPATH	300	SINGLE ARM	NOT APPLICABLE	RIGID COLUMN	URBIS	AXIA 2 S1	MALLATITE	TUBULAR STEEL	6	GALVANISED	TUBULAR
46100970	MEADOW ROAD	Scunthorpe	487444.02	408724.13	9	7008	00190950	19/10/2020 00:00	5	2	LESS THAN 30MPH	BACK OF FOOTPATH	0	POST TOP	NOT APPLICABLE	RIGID COLUMN	URBIS	AXIA 2 S1	MALLATITE	TUBULAR STEEL	6	GALVANISED	TUBULAR
46100971	MEADOWBANK	Belton Parish	478454.48	406223.72	1	7000	00190952	01/04/1980 00:00	5	3	LESS THAN 30MPH	BACK OF FOOTPATH	0	POST TOP	NOT APPLICABLE	RIGID COLUMN	URBIS	AXIA 2 S1	MALLATITE	TUBULAR STEEL	5	GALVANISED	STEPPED TUBULAR
46100971	MEADOWBANK	Belton Parish	478476.19	406232.14	2	7001	00190953	01/04/1980 00:00	5	3	LESS THAN 30MPH	VERGE	0	POST TOP	NOT APPLICABLE	RIGID COLUMN	URBIS	AXIA 2 S1	MALLATITE	TUBULAR STEEL	5	GALVANISED	STEPPED TUBULAR
46100971	MEADOWBANK	Belton Parish	478502.12	406245.2	3	7002	00190954	01/04/1980 00:00	5	3	LESS THAN 30MPH	VERGE	0	POST TOP	NOT APPLICABLE	RIGID COLUMN	URBIS	AXIA 2 S1	MALLATITE	TUBULAR STEEL	5	GALVANISED	STEPPED TUBULAR
46100971	MEADOWBANK	Belton Parish	478523.62	406248.97	4	7003	00190955	01/04/1980 00:00	5	3	LESS THAN 30MPH	VERGE	0	POST TOP	NOT APPLICABLE	RIGID COLUMN	URBIS	AXIA 2 S1	MALLATITE	TUBULAR STEEL	5	GALVANISED	STEPPED TUBULAR
46100973	MEGGITT LANE	Winteringham Parish	492517.63	422453.43	1	7000	00190956	01/04/1980 00:00	1	3	LESS THAN 30MPH	VERGE	300	SINGLE ARM	NOT APPLICABLE	RIGID COLUMN	URBIS	AXIA 2 S1	PETITJEAN	SHEET STEEL	5	GALVANISED	DAER
46100973	MEGGITT LANE	Winteringham Parish	492514.86	422496.24	2	7001	00190957	07/02/2019 00:00	1	3	LESS THAN 30MPH	VERGE	0	POST TOP	NOT APPLICABLE	RIGID COLUMN	URBIS	AXIA 2 S1	MALLATITE	TUBULAR STEEL	6	GALVANISED	TUBULAR
46100973	MEGGITT LANE	Winteringham Parish	492532.63	422519.68	3	7002	00190958	07/02/2019 00:00	1	3	LESS THAN 30MPH	VERGE	0	POST TOP	NOT APPLICABLE	RIGID COLUMN	URBIS	AXIA 2 S1	MALLATITE	TUBULAR STEEL	6	GALVANISED	TUBULAR
46100973	MEGGITT LANE	Winteringham Parish	492555.8	422537.81	4	7003	00190959	07/02/2019 00:00	1	3	LESS THAN 30MPH	VERGE	0	POST TOP	NOT APPLICABLE	RIGID COLUMN	URBIS	AXIA 2 S1	MALLATITE	TUBULAR STEEL	6	GALVANISED	TUBULAR
46100973	MEGGITT LANE	Winteringham Parish	492592.83	422524.9	5	7004	00190960	01/04/1982 00:00	1	3	LESS THAN 30MPH	VERGE	300	SINGLE ARM	NOT APPLICABLE	RIGID COLUMN	URBIS	AXIA 2 S1	PETITJEAN	SHEET STEEL	5	GALVANISED	DAER
46100973	MEGGITT LANE	Winteringham Parish	492625.66	422515.06	6	7005	00190961	14/03/2018 00:00	1	3	LESS THAN 30MPH	VERGE	0	POST TOP	NOT APPLICABLE	RIGID COLUMN	URBIS	AXIA 2 S1	VALMONT ST	TUBULAR STEEL	6	GALVANISED	TUBULAR
46100973	MEGGITT LANE	Winteringham Parish	492639.34	422502.02	7	7006	00190962	01/04/2016 00:00	1	3	LESS THAN 30MPH	VERGE	0	POST TOP	NOT APPLICABLE	RIGID COLUMN	URBIS	AXIA 2 S1	MALLATITE	TUBULAR STEEL	6	GALVANISED	TUBULAR
46100975	MELWOOD CLOSE	Epworth Parish	479010.35	403701.62	1	7000	00190963	01/04/1995 00:00	5	3	LESS THAN 30MPH	VERGE	0	POST TOP	NOT APPLICABLE	RIGID COLUMN	URBIS	AXIA 2 S1	MALLATITE	TUBULAR STEEL	5	GALVANISED	STEPPED TUBULAR
46100975	MELWOOD CLOSE	Epworth Parish	479026.34	403713.47	2	7001	00190964	01/04/1995 00:00	5	3	LESS THAN 30MPH	VERGE	0	POST TOP	NOT APPLICABLE	RIGID COLUMN	URBIS	AXIA 2 S1	MALLATITE	TUBULAR STEEL	5	GALVANISED	STEPPED TUBULAR
46100975	MELWOOD CLOSE	Epworth Parish	479026.82	403728.27	3	7002	00190965	01/04/1995 00:00	5	3	LESS THAN 30MPH	VERGE	0	POST TOP	NOT APPLICABLE	RIGID COLUMN	URBIS	AXIA 2 S1	MALLATITE	TUBULAR STEEL	5	GALVANISED	STEPPED TUBULAR
46100977	MELWOOD VIEW	Epworth Parish	478961.66	403758.67	12	7000	00190966	01/04/1995 00:00	5	3	LESS THAN 30MPH	BACK OF FOOTPATH	0	POST TOP	NOT APPLICABLE	RIGID COLUMN	URBIS	AXIA 2 S1	PETITJEAN	SHEET STEEL	5	GALVANISED	NIDD
46100977	MELWOOD VIEW	Epworth Parish	478975.44	403734.65	13	7001	00190967	01/04/1995 00:00	5	3	LESS THAN 30MPH	BACK OF FOOTPATH	0	POST TOP	NOT APPLICABLE	RIGID COLUMN	URBIS	AXIA 2 S1	PETITJEAN	SHEET STEEL	5	GALVANISED	NIDD
46100977	MELWOOD VIEW	Epworth Parish	478995.36	403710.87	14	7002	00190968	01/04/1995 00:00	5	3	LESS THAN 30MPH	BACK OF FOOTPATH	0	POST TOP	NOT APPLICABLE	RIGID COLUMN	URBIS	AXIA 2 S1	PETITJEAN	SHEET STEEL	5	GALVANISED	NIDD
46100977	MELWOOD VIEW	Epworth Parish	479003.26	403685.49	15	7003	00190969	01/04/1995 00:00	5	3	LESS THAN 30MPH	BACK OF FOOTPATH	0	POST TOP	NOT APPLICABLE	RIGID COLUMN	URBIS	AXIA 2 S1	PETITJEAN	SHEET STEEL	5	GALVANISED	NIDD
46100977	MELWOOD VIEW	Epworth Parish	479029.67	403666.09	16	7004	00190970	01/04/1994 00:00	5	3	LESS THAN 30MPH	BACK OF FOOTPATH	0	POST TOP	NOT APPLICABLE	RIGID COLUMN	URBIS	AXIA 2 S1	PETITJEAN	SHEET STEEL	5	GALVANISED	NIDD
46100977	MELWOOD VIEW	Epworth Parish	479031.95	403639	17	7005	00190971	01/04/1994 00:00	5	3	LESS THAN 30MPH	BACK OF FOOTPATH	0	POST TOP	NOT APPLICABLE	RIGID COLUMN	URBIS	AXIA 2 S1	PETITJEAN	SHEET STEEL	5	GALVANISED	NIDD
46100977	MELWOOD VIEW	Epworth Parish	479017.66	403609.72	18	7006	00190972	01/04/1994 00:00	5	3	LESS THAN 30MPH	BACK OF FOOTPATH	0	POST TOP	NOT APPLICABLE	RIGID COLUMN	URBIS	AXIA 2 S1	PETITJEAN	SHEET STEEL	5	GALVANISED	NIDD
46100977	MELWOOD VIEW	Epworth Parish	479000.81	403591.01	19	7007	00190973	01/04/1994 00:00	5	3	LESS THAN 30MPH	BACK OF FOOTPATH	0	POST TOP	NOT APPLICABLE	RIGID COLUMN	URBIS	AXIA 2 S1	PETITJEAN	SHEET STEEL	5	GALVANISED	NIDD
46100978	MENDIP ROAD	Scunthorpe	487812.89	409663.03	1	7000	00190974	01/04/2013 00:00	5	2	LESS THAN 30MPH	BACK OF FOOTPATH	0	POST TOP	NOT APPLICABLE	RIGID COLUMN	URBIS	AXIA 2 S1	MALLATITE	TUBULAR STEEL	6	GALVANISED	TUBULAR
46100978	MENDIP ROAD	Scunthorpe	487820.94	409691.53	2	7001	00190975	04/05/2021 00:00	5	2	LESS THAN 30MPH	VERGE	0	POST TOP	NOT APPLICABLE	RIGID COLUMN	URBIS	AXIA 2 S1	MALLATITE	TUBULAR STEEL	6	GALVANISED	TUBULAR
46100978	MENDIP ROAD	Scunthorpe	487836.43	409718.38	3	7002	00190976	04/05/2021 00:00	5	2	LESS THAN 30MPH	VERGE	0	POST TOP	NOT APPLICABLE	RIGID COLUMN	URBIS	AXIA 2 S1	MALLATITE	TUBULAR STEEL	6	GALVANISED	TUBULAR
46100978	MENDIP ROAD	Scunthorpe	487853.34	409710.04	4	7003	00190977	01/04/2003 00:00	5	2	LESS THAN 30MPH	BACK OF FOOTPATH	800	SINGLE ARM	NOT APPLICABLE	RIGID COLUMN	URBIS	AXIA 2 S1	T AND L	TUBULAR STEEL	5	GALVANISED	STEPPED TUBULAR
46100978	MENDIP ROAD	Scunthorpe	487875.14	409712.38	5	7004	00190978	04/05/2021 00:00	5	2	LESS THAN 30MPH	BACK OF FOOTPATH	0	POST TOP	NOT APPLICABLE	RIGID COLUMN	URBIS	AXIA 2 S1	MALLATITE	TUBULAR STEEL	6	GALVANISED	TUBULAR
46100978	MENDIP ROAD	Scunthorpe	487908.89	409718.92	6	7005	00190979	01/04/2013 00:00	5	2	LESS THAN 30MPH	VERGE	0	POST TOP	NOT APPLICABLE	RIGID COLUMN	URBIS	AXIA 2 S1	MALLATITE	TUBULAR STEEL	6	NOT APPLICABI	TUBULAR
46100978	MENDIP ROAD	Scunthorpe	487943.68	409715.73	7	7006	00190980	01/04/2013 00:00	5	2	LESS THAN 30MPH	VERGE	0	POST TOP	NOT APPLICABLE	RIGID COLUMN	URBIS	AXIA 2 S1	MALLATITE	TUBULAR STEEL	6	GALVANISED	TUBULAR
46100978	MENDIP ROAD	Scunthorpe	487949.98	409758.03	8	7007	00190981	01/04/2005 00:00	5	2	LESS THAN 30MPH	BACK OF FOOTPATH	300	SINGLE ARM	NOT APPLICABLE	RIGID COLUMN	URBIS	AXIA 2 S1	MALLATITE	TUBULAR STEEL	6	GALVANISED	TUBULAR
46100979	MERE CRESCENT	Scunthorpe	490602.55	409131	1	7000	00190982	01/04/1993 00:00	3	2	LESS THAN 30MPH	BACK OF FOOTPATH	800	SINGLE ARM	NOT APPLICABLE	RIGID COLUMN	URBIS	AXIA 2 S1	PETITJEAN	SHEET STEEL	5	GALVANISED	DAER
46100979	MERE CRESCENT	Scunthorpe	490561.17	409140.71	2	7001	00190983	12/02/2021 00:00	3	2	LESS THAN 30MPH	BACK OF FOOTPATH	0	POST TOP	NOT APPLICABLE	RIGID COLUMN	URBIS	AXIA 2 S1	MALLATITE	TUBULAR STEEL	6	GALVANISED	TUBULAR
46100981	MEREDITH AVENUE	Scunthorpe	487708.2	408761.22	1	7000	00190984	01/04/1999 00:00	5	2	LESS THAN 30MPH	VERGE	300	SINGLE ARM	NOT APPLICABLE	RIGID COLUMN	URBIS	AXIA 2 S1	PETITJEAN	SHEET STEEL	5	GALVANISED	DAER
46100981	MEREDITH AVENUE	Scunthorpe	487511.64	408779.6	10	7009	00190993	01/04/2013 00:00	5	2	LESS THAN 30MPH	BACK OF FOOTPATH	0	POST TOP	NOT APPLICABLE	RIGID COLUMN	URBIS	AXIA 2 S1	MALLATITE	TUBULAR STEEL	6	GALVANISED	TUBULAR
46100981	MEREDITH AVENUE	Scunthorpe	487492.48	408772.97	11	7010	00190994	01/04/2012 00:00	5	2	LESS THAN 30MPH	VERGE	0	POST TOP	NOT APPLICABLE	RIGID COLUMN	URBIS	AXIA 2 S1	MALLATITE	TUBULAR STEEL	6	GALVANISED	TUBULAR
46100981	MEREDITH AVENUE	Scunthorpe	487472.03	408774.64	12	7011	00190995	01/04/2013 00:00	5	2	LESS THAN 30MPH	VERGE	0	POST TOP	NOT APPLICABLE	RIGID COLUMN	URBIS	AXIA 2 S1	MALLATITE	TUBULAR STEEL	6	GALVANISED	TUBULAR
46100981	MEREDITH AVENUE	Scunthorpe	487449.71	408783.3	13	7012	00190996	18/09/2020 00:00	5	2	LESS THAN 30MPH	BACK OF FOOTPATH	0	POST TOP	NOT APPLICABLE	RIGID COLUMN	URBIS	AXIA 2 S1	MALLATITE	TUBULAR STEEL	6	GALVANISED	TUBULAR
46100981	MEREDITH AVENUE	Scunthorpe	487429.07	408776.91	14	7013	00190997	01/04/1980 00:00	5	2	LESS THAN 30MPH	VERGE	1000	SINGLE ARM	NOT APPLICABLE	RIGID COLUMN	URBIS	AXIA 2 S1	PETITJEAN	SHEET STEEL	5	GALVANISED	DAER
46100981	MEREDITH AVENUE	Scunthorpe	487403.23	408786	15	7014	00190998	18/09/2020 00:00	5	2	LESS THAN 30MPH	BACK OF FOOTPATH	0	POST TOP	NOT APPLICABLE	RIGID COLUMN	URBIS	AXIA 2 S1	MALLATITE	TUBULAR STEEL	6	GALVANISED	TUBULAR
46100981	MEREDITH AVENUE	Scunthorpe	487381.27	408780.06	16	7015	00190999	01/04/1980 00:00	5	2	LESS THAN 30MPH	VERGE	0	POST TOP	NOT APPLICABLE	RIGID COLUMN	URBIS	AXIA 2 S1	PETITJEAN	SHEET STEEL	5	GALVANISED	NIDD
46100981	MEREDITH AVENUE	Scunthorpe	487686.58	408770.07	2	7001	00190985	18/09/2020 00:00	5	2	LESS THAN 30MPH	BACK OF FOOTPATH	0	POST TOP	NOT APPLICABLE	RIGID COLUMN	URBIS	AXIA 2 S1	MALLATITE	TUBULAR STEEL	6	GALVANISED	TUBULAR
46100981	MEREDITH AVENUE	Scunthorpe	487660.73	408764.05	3	7002	00190986	18/09/2020 00:00	5	2	LESS THAN 30MPH	BACK OF FOOTPATH	0	POST TOP	NOT APPLICABLE	RIGID COLUMN	URBIS	AXIA 2 S1	MALLATITE	TUBULAR STEEL	6	GALVANISED	TUBULAR
46100981	MEREDITH AVENUE	Scunthorpe	487637.34	408773.25	4	7003	00190987	18/09/2020 00:00	5	2	LESS THAN 30MPH	BACK OF FOOTPATH	0	POST TOP	NOT APPLICABLE	RIGID COLUMN	URBIS	AXIA 2 S1	MALLATITE	TUBULAR STEEL	6	GALVANISED	TUBULAR
46100981	MEREDITH AVENUE	Scunthorpe	487617.93	408766.37	5	7004	00190988	18/09/2020 00:00	5	2	LESS THAN 30MPH	BACK OF FOOTPATH	0	POST TOP	NOT APPLICABLE	RIGID COLUMN	URBIS	AXIA 2 S1	MALLATITE	TUBULAR STEEL	6	GALVANISED	TUBULAR
46100981	MEREDITH AVENUE	Scunthorpe	487595.06	408767.73	6	7005	00190989	18/09/2020 00:00	5	2	LESS THAN 30MPH	BACK OF FOOTPATH	0	POST TOP	NOT APPLICABLE	RIGID COLUMN	URBIS	AXIA 2 S1	MALLATITE	TUBULAR STEEL	6	GALVANISED	TUBULAR
46100981	MEREDITH AVENUE	Scunthorpe	487572.15	408776.54	7	7006	00190990	18/09/2020 00:00	5	2	LESS THAN 30MPH	BACK OF FOOTPATH	0	POST TOP	NOT APPLICABLE	RIGID COLUMN	URBIS	AXIA 2 S1	MALLATITE	TUBULAR STEEL	6	GALVANISED	TUBULAR
46100981	MEREDITH AVENUE	Scunthorpe	487551.37	408769.71	8	7007	00190991	01/04/1980 00:00	5	2	LESS THAN 30MPH	VERGE	300	SINGLE ARM	NOT APPLICABLE	RIGID COLUMN	URBIS	AXIA 2 S1	PETITJEAN	SHEET STEEL	5	GALVANISED	DAER
46100981	MEREDITH AVENUE	Scunthorpe	487530.63	408771.04	9	7008	00190992	01/04/2013 00:00	5	2	LESS THAN 30MPH	VERGE	0	POST TOP	NOT APPLICABLE	RIGID COLUMN	URBIS	AXIA 2 S1	MALLATITE	TUBULAR STEEL	6	GALVANISED	TUBULAR
46100982	MERLIN DRIVE	Elsham Parish	504755.49	413353.79	1FP	7000	00191000	01/04/1981 00:00	6	1	LESS THAN 30MPH	FRONT OF FOOTPATH	1500	SINGLE ARM	MID GREY	RIGID COLUMN	URBIS	AXIA 2 S1	PETITJEAN	SHEET STEEL	8	PAINTED	THAMES
46100982	MERLIN DRIVE	Elsham Parish	504775.88	413345.26	2	7001	00191001	01/04/1981 00:00	6	1	LESS THAN 30MPH	VERGE	1500	SINGLE ARM	MID GREY	RIGID COLUMN	URBIS	AXIA 2 S1	PETITJEAN	SHEET STEEL	8	PAINTED	THAMES
46100982	MERLIN DRIVE	Elsham Parish	504800.44	413329.01	3	7002	00191002	01/04/1981 00:00	6	1	LESS THAN 30MPH	VERGE	1500	SINGLE ARM	MID GREY	RIGID COLUMN	URBIS	AXIA 2 S1	PETITJEAN	SHEET STEEL	8	PAINTED	THAMES
46100982	MERLIN DRIVE	Elsham Parish	504820.84	413313.14	4	7003	00191003	01/04/1981 00:00	6	1	LESS THAN 30MPH	VERGE	1500	SINGLE ARM	MID GREY	RIGID COLUMN	URBIS	AXIA 2 S1	PETITJEAN	SHEET STEEL	8	PAINTED	THAMES
46100983	MERLIN ROAD	Scunthorpe	488300.14	408652.51	1	7000	00191004	01/04/2001 00:00	5	2	LESS THAN 30MPH	FRONT OF FOOTPATH	0	POST TOP	NOT APPLICABLE	RIGID COLUMN	URBIS	AXIA 2 S1	MALLATITE	TUBULAR STEEL	6	GALVANISED	STEPPED TUBULAR
46100983	MERLIN ROAD	Scunthorpe	488169.74	408578.81	1	7020	00191024	01/04/1990 00:00	5	2	NOT ON A ROAD	BACK OF FOOTPATH	0	POST TOP	NOT APPLICABLE	RIGID COLUMN	URBIS	AXIA 2 S1	PETITJEAN	SHEET STEEL	5	GALVANISED	NIDD
46100983	MERLIN ROAD	Scunthorpe	488096.73	408690.51	10	7009	00191013	01/04/2001 00:00	5	2	LESS THAN 30MPH	FRONT OF FOOTPATH	0	POST TOP	NOT APPLICABLE	RIGID COLUMN	URBIS	AXIA 2 S1	MALLATITE	TUBULAR STEEL	6	GALVANISED	STEPPED TUBULAR
46100983	MERLIN ROAD	Scunthorpe	488092.05	408729.23	11	7010	00191014	01/04/2001 00:00	5	2	LESS THAN 30MPH	FRONT OF FOOTPATH	0	POST TOP	NOT APPLICABLE	RIGID COLUMN	URBIS	AXIA 2 S1	MALLATITE	TUBULAR STEEL	6	GALVANISED	STEPPED TUBULAR
46100983	MERLIN ROAD	Scunthorpe	488098.71	408761.11	12	7011	00191015	01/04/2001 00:00	5	2	LESS THAN 30MPH	FRONT OF FOOTPATH	0	POST TOP	NOT APPLICABLE	RIGID COLUMN	URBIS	AXIA 2 S1	MALLATITE	TUBULAR STEEL	6	GALVANISED	STEPPED TUBULAR
46100983	MERLIN ROAD	Scunthorpe	488122.72	408786.47	13	7012	00191016	01/04/2001 00:00	5	2	LESS THAN 30MPH	FRONT OF FOOTPATH	0	POST TOP	NOT APPLICABLE	RIGID COLUMN	URBIS	AXIA 2 S1	MALLATITE	TUBULAR STEEL	6	GALVANISED	STEPPED TUBULAR
46100983	MERLIN ROAD	Scunthorpe	488157.38	408794.66	14	7013	00191017	01/04/2001 00:00	5	2	LESS THAN 30MPH	FRONT OF FOOTPATH	0	POST TOP	NOT APPLICABLE	RIGID COLUMN	URBIS	AXIA 2 S1	MALLATITE	TUBULAR STEEL	6	GALVANISED	STEPPED TUBULAR
46100983	MERLIN ROAD	Scunthorpe	488187.59	408812.79	15	7014	00191018	01/04/2001 00:00	5	2	LESS THAN 30MPH	FRONT OF FOOTPATH	0	POST TOP	NOT APPLICABLE	RIGID COLUMN	URBIS	AXIA 2 S1	MALLATITE	TUBULAR STEEL	6	GALVANISED	STEPPED TUBULAR
46100983	MERLIN ROAD	Scunthorpe	488225.02	408819.78	16	7015	00191019	01/04/2001 00:00	5	2	LESS THAN 30MPH	FRONT OF FOOTPATH	0	POST TOP	NOT APPLICABLE	RIGID COLUMN	URBIS	AXIA 2 S1	MALLATITE	TUBULAR STEEL	6	GALVANISED	STEPPED TUBULAR
46100983	MERLIN ROAD	Scunthorpe	488247.9	408834.73	17	7016	00191020	01/04/2001 00:00	5	2	LESS THAN 30MPH	FRONT OF FOOTPATH	0	POST TOP	NOT APPLICABLE	RIGID COLUMN	URBIS	AXIA 2 S1	MALLATITE	TUBULAR STEEL	6	GALVANISED	STEPPED TUBULAR
46100983	MERLIN ROAD	Scunthorpe	488281.2	408840.99	18	7017	00191021	01/04/2001 00:00	5	2	LESS THAN 30MPH	FRONT OF FOOTPATH	0	POST TOP	NOT APPLICABLE	RIGID COLUMN	URBIS	AXIA 2 S1	MALLATITE	TUBULAR STEEL	6	GALVANISED	STEPPED TUBULAR
46100983	MERLIN ROAD	Scunthorpe	488315.95	408862.41	19	7018	00191022	01/04/2001 00:00	5	2	LESS THAN 30MPH	FRONT OF FOOTPATH	0	POST TOP	NOT APPLICABLE	RIGID COLUMN	URBIS	AXIA 2 S1	MALLATITE	TUBULAR STEEL	6	GALVANISED	STEPPED TUBULAR
46100983	MERLIN ROAD	Scunthorpe	488510.71	408466.96	2	7001	00191005	01/04/2001 00:00	5	2	LESS THAN 30MPH	FRONT OF FOOTPATH	0	POST TOP	NOT APPLICABLE	RIGID COLUMN	URBIS	AXIA 2 S1	MALLATITE	TUBULAR STEEL	6	GALVANISED	STEPPED TUBULAR
46100983	MERLIN ROAD	Scunthorpe	488347.12	408874.34	20	7019	00191023	01/04/2001 00:00	5	2	LESS THAN 30MPH	FRONT OF FOOTPATH	0	POST TOP	NOT APPLICABLE	RIGID COLUMN	URBIS	AXIA 2 S1	MALLATITE	TUBULAR STEEL	6	GALVANISED	STEPPED TUBULAR
46100983	MERLIN ROAD	Scunthorpe	488255.51	408628.12	3	7002	00191006	01/04/2001 00:00	5	2	LESS THAN 30MPH	FRONT OF FOOTPATH	0	POST TOP	NOT APPLICABLE	RIGID COLUMN	URBIS	AXIA 2 S1	MALLATITE	TUBULAR STEEL	6	GALVANISED	STEPPED TUBULAR
46100983	MERLIN ROAD	Scunthorpe	488223.62	408624.92	4	7003	00191007	01/04/2001 00:00	5	2	LESS THAN 30MPH	FRONT OF FOOTPATH	0	POST TOP	NOT APPLICABLE	RIGID COLUMN	URBIS	AXIA 2 S1	MALLATITE	TUBULAR STEEL	6	GALVANISED	STEPPED TUBULAR
46100983	MERLIN ROAD	Scunthorpe	488198.51	408609.41	5	7004	00191008	01/04/2001 00:00	5	2	LESS THAN 30MPH	FRONT OF FOOTPATH	0	POST TOP	NOT APPLICABLE	RIGID COLUMN	URBIS	AXIA 2 S1	MALLATITE	TUBULAR STEEL	6	GALVANISED	STEPPED TUBULAR
46100983	MERLIN ROAD	Scunthorpe	488158.2	408597.87	6	7005	00191009	01/04/2001 00:00	5	2	LESS THAN 30MPH	FRONT OF FOOTPATH	0	POST TOP	NOT APPLICABLE	RIGID COLUMN	URBIS	AXIA 2 S1	MALLATITE	TUBULAR STEEL	6	GALVANISED	STEPPED TUBULAR
46100983	MERLIN ROAD	Scunthorpe	488124.66	408610.4	7	7006	00191010	01/04/2001 00:00	5	2	LESS THAN 30MPH	FRONT OF FOOTPATH	0	POST TOP	NOT APPLICABLE	RIGID COLUMN	URBIS	AXIA 2 S1	MALLATITE	TUBULAR STEEL	6	GALVANISED	STEPPED TUBULAR
46100983	MERLIN ROAD	Scunthorpe	488108.97	408635.84	8	7007	00191011	01/04/2001 00:00	5	2	LESS THAN 30MPH	FRONT OF FOOTPATH	0	POST TOP	NOT APPLICABLE	RIGID COLUMN	URBIS	AXIA 2 S1	MALLATITE	TUBULAR STEEL	6	GALVANISED	STEPPED TUBULAR
46100983	MERLIN ROAD	Scunthorpe	488109.5	408667.14

46101007	MILL LANE	Haxey Parish	475789.19	399908.45	5	7004	00191198	01/04/1993 00:00	6	2	LESS THAN 30MPH	VERGE	300	SINGLE ARM	NOT APPLICABLE	RIGID COLUMN	URBIS	AXIA 2 S1	PETITJEAN	SHEET STEEL	5	GALVANISED	DAER
46101007	MILL LANE	Haxey Parish	475802.64	399943.39	6	7005	00191199	01/04/1993 00:00	6	2	LESS THAN 30MPH	VERGE	300	SINGLE ARM	NOT APPLICABLE	RIGID COLUMN	URBIS	AXIA 2 S1	PETITJEAN	SHEET STEEL	5	GALVANISED	DAER
46101007	MILL LANE	Haxey Parish	475815	399970.81	7	7006	00191200	01/04/1993 00:00	6	2	LESS THAN 30MPH	VERGE	300	SINGLE ARM	NOT APPLICABLE	RIGID COLUMN	URBIS	AXIA 2 S1	PETITJEAN	SHEET STEEL	5	GALVANISED	DAER
46101007	MILL LANE	Haxey Parish	475829.52	399993.39	8	7007	00191201	01/04/1993 00:00	6	2	LESS THAN 30MPH	VERGE	300	SINGLE ARM	NOT APPLICABLE	RIGID COLUMN	URBIS	AXIA 2 S1	PETITJEAN	SHEET STEEL	5	GALVANISED	DAER
46101007	MILL LANE	Haxey Parish	475844.59	400021.01	9	7008	00191202	01/04/1993 00:00	6	2	LESS THAN 30MPH	VERGE	300	SINGLE ARM	NOT APPLICABLE	RIGID COLUMN	URBIS	AXIA 2 S1	PETITJEAN	SHEET STEEL	5	GALVANISED	DAER
46101008	MILL LANE	Kirton in Lindsey Parish	493981.83	398267	1	7000	00191204	01/04/1980 00:00	1	3	LESS THAN 30MPH	BACK OF FOOTPATH	0	POST TOP	LIGHT GREY	RIGID COLUMN	URBIS	AXIA 2 S1	PETITJEAN	SHEET STEEL	5	PAINTED	NIDD
46101008	MILL LANE	Kirton in Lindsey Parish	494019.17	398279.08	2	7001	00191205	09/01/2019 00:00	1	3	LESS THAN 30MPH	BACK OF FOOTPATH	0	POST TOP	NOT APPLICABLE	RIGID COLUMN	URBIS	AXIA 2 S1	MALLATITE	TUBULAR STEEL	6	GALVANISED	TUBULAR
46101008	MILL LANE	Kirton in Lindsey Parish	494050.97	398296.19	3	7002	00191206	01/04/1980 00:00	1	3	LESS THAN 30MPH	BACK OF FOOTPATH	0	POST TOP	LIGHT GREY	RIGID COLUMN	URBIS	AXIA 2 S1	PETITJEAN	SHEET STEEL	5	PAINTED	NIDD
46101008	MILL LANE	Kirton in Lindsey Parish	494084.48	398313.65	4	7003	00191207	01/04/1980 00:00	1	3	LESS THAN 30MPH	BACK OF FOOTPATH	0	POST TOP	LIGHT GREY	RIGID COLUMN	URBIS	AXIA 2 S1	PETITJEAN	SHEET STEEL	5	PAINTED	NIDD
46101008	MILL LANE	Kirton in Lindsey Parish	494114.44	398329.83	5	7004	00191208	09/01/2019 00:00	1	3	LESS THAN 30MPH	BACK OF FOOTPATH	0	POST TOP	NOT APPLICABLE	RIGID COLUMN	URBIS	AXIA 2 S1	MALLATITE	TUBULAR STEEL	6	GALVANISED	TUBULAR
46101008	MILL LANE	Kirton in Lindsey Parish	494144	398335	6	7005	04200489	01/04/2018 00:00	1	3	LESS THAN 30MPH	BACK OF PATH	0	POST TOP	NOT APPLICABLE	RIGID COLUMN	URBIS	AXIA 2 S1	MALLATITE	TUBULAR STEEL	5	GALVANISED	TUBULAR
46101009	MILL LANE	Scawby Parish	497204.63	405530.82	1	7000	00191209	01/04/1973 00:00	2	2	LESS THAN 30MPH	BACK OF FOOTPATH	500	SINGLE ARM	MID GREY	RIGID COLUMN	URBIS	AXIA 2 S1	PETITJEAN	SHEET STEEL	5	PAINTED	DAER
46101009	MILL LANE	Scawby Parish	497338.53	405196.98	10	7009	00191218	01/04/1973 00:00	2	2	LESS THAN 30MPH	BACK OF FOOTPATH	500	SINGLE ARM	MID GREY	RIGID COLUMN	URBIS	AXIA 2 S1	PETITJEAN	SHEET STEEL	5	PAINTED	DAER
46101009	MILL LANE	Scawby Parish	497223.9	405483.82	2	7001	00191210	01/04/1973 00:00	2	2	LESS THAN 30MPH	BACK OF FOOTPATH	500	SINGLE ARM	MID GREY	RIGID COLUMN	URBIS	AXIA 2 S1	PETITJEAN	SHEET STEEL	5	PAINTED	DAER
46101009	MILL LANE	Scawby Parish	497237.1	405450.29	3	7002	00191211	29/11/2024 00:00	2	2	LESS THAN 30MPH	BACK OF FOOTPATH	500	SINGLE ARM	NOT APPLICABLE	RIGID COLUMN	URBIS	AXIA 2 S1	MALLATITE	TUBULAR STEEL	6	NOT APPLICABI	TUBULAR
46101009	MILL LANE	Scawby Parish	497252.54	405413.22	4	7003	00191212	01/04/1973 00:00	2	2	LESS THAN 30MPH	BACK OF FOOTPATH	500	SINGLE ARM	MID GREY	RIGID COLUMN	URBIS	AXIA 2 S1	PETITJEAN	SHEET STEEL	5	PAINTED	DAER
46101009	MILL LANE	Scawby Parish	497270.29	405369.24	5	7004	00191213	01/04/1973 00:00	2	2	LESS THAN 30MPH	BACK OF FOOTPATH	500	SINGLE ARM	MID GREY	RIGID COLUMN	URBIS	AXIA 2 S1	PETITJEAN	SHEET STEEL	5	PAINTED	DAER
46101009	MILL LANE	Scawby Parish	497283.39	405336.24	6	7005	00191214	01/04/1973 00:00	2	2	LESS THAN 30MPH	BACK OF FOOTPATH	500	SINGLE ARM	MID GREY	RIGID COLUMN	URBIS	AXIA 2 S1	PETITJEAN	SHEET STEEL	5	PAINTED	DAER
46101009	MILL LANE	Scawby Parish	497297.81	405301.07	7	7006	00191215	03/09/2021 00:00	2	2	LESS THAN 30MPH	BACK OF FOOTPATH	0	POST TOP	NOT APPLICABLE	RIGID COLUMN	URBIS	AXIA 2 S1	MALLATITE	TUBULAR STEEL	6	GALVANISED	TUBULAR
46101009	MILL LANE	Scawby Parish	497311.8	405266.19	8	7007	00191216	01/04/1973 00:00	2	2	LESS THAN 30MPH	BACK OF FOOTPATH	500	SINGLE ARM	MID GREY	RIGID COLUMN	URBIS	AXIA 2 S1	PETITJEAN	SHEET STEEL	5	PAINTED	DAER
46101009	MILL LANE	Scawby Parish	497325.34	405232.5	9	7008	00191217	01/04/1973 00:00	2	2	LESS THAN 30MPH	BACK OF FOOTPATH	500	SINGLE ARM	MID GREY	RIGID COLUMN	URBIS	AXIA 2 S1	PETITJEAN	SHEET STEEL	5	PAINTED	DAER
46101011	MILL ROAD	Keadby with Althorpe Parish	483484.91	410906.11	1	7000	00191219	01/04/1985 00:00	4	3	LESS THAN 30MPH	VERGE	300	SINGLE ARM	NOT APPLICABLE	RIGID COLUMN	URBIS	AXIA 2 S1	PETITJEAN	SHEET STEEL	5	GALVANISED	DAER
46101011	MILL ROAD	Keadby with Althorpe Parish	483493.67	410933.85	2	7001	00191220	01/04/1985 00:00	4	3	LESS THAN 30MPH	BACK OF FOOTPATH	300	SINGLE ARM	NOT APPLICABLE	RIGID COLUMN	URBIS	AXIA 2 S1	PETITJEAN	SHEET STEEL	5	GALVANISED	DAER
46101014	MILSON CLOSE	Barton upon Humber Parish	502519.65	421608.64	1	7000	00191221	01/04/2008 00:00	5	2	LESS THAN 30MPH	BACK OF FOOTPATH	0	POST TOP	NOT APPLICABLE	RIGID COLUMN	URBIS	AXIA 2 S1	BRITISH STEI	TUBULAR STEEL	6	GALVANISED	ASH
46101014	MILSON CLOSE	Barton upon Humber Parish	502524.47	421580.73	2	7001	00191222	01/04/2015 00:00	5	2	LESS THAN 30MPH	BACK OF FOOTPATH	0	POST TOP	NOT APPLICABLE	RIGID COLUMN	URBIS	AXIA 2 S1	VALMONT ST	TUBULAR STEEL	6	GALVANISED	TUBULAR
46101014	MILSON CLOSE	Barton upon Humber Parish	502508.77	421552.46	3	7002	00191223	14/05/2020 00:00	5	2	LESS THAN 30MPH	BACK OF FOOTPATH	0	POST TOP	NOT APPLICABLE	RIGID COLUMN	URBIS	AXIA 2 S1	MALLATITE	TUBULAR STEEL	6	GALVANISED	TUBULAR
46101015	MILSON CLOSE	Broughton Parish	495981.05	409238.96	1	7000	00191224	01/04/1980 00:00	1	1	LESS THAN 30MPH	VERGE	0	POST TOP	NOT APPLICABLE	RIGID COLUMN	URBIS	AXIA 2 S1	PETITJEAN	SHEET STEEL	5	GALVANISED	NIDD
46101015	MILSON CLOSE	Broughton Parish	495975.2	409260.78	2	7001	00191225	01/04/1980 00:00	1	1	LESS THAN 30MPH	VERGE	0	POST TOP	NOT APPLICABLE	RIGID COLUMN	URBIS	AXIA 2 S1	PETITJEAN	SHEET STEEL	5	GALVANISED	NIDD
46101015	MILSON CLOSE	Broughton Parish	495977.07	409291.64	3	7002	00191226	01/04/1980 00:00	1	1	LESS THAN 30MPH	VERGE	0	POST TOP	NOT APPLICABLE	RIGID COLUMN	URBIS	AXIA 2 S1	PETITJEAN	SHEET STEEL	5	GALVANISED	NIDD
46101015	MILSON CLOSE	Broughton Parish	495963.17	409325.78	4	7003	00191227	01/04/1980 00:00	1	1	LESS THAN 30MPH	VERGE	0	POST TOP	NOT APPLICABLE	RIGID COLUMN	URBIS	AXIA 2 S1	PETITJEAN	SHEET STEEL	5	GALVANISED	NIDD
46101016	MILTON ROAD	Scunthorpe	489913.83	408421.15	1	7000	00191228	01/04/1980 00:00	1	3	LESS THAN 30MPH	BACK OF FOOTPATH	300	SINGLE ARM	NOT APPLICABLE	RIGID COLUMN	URBIS	AXIA 2 S1	PETITJEAN	SHEET STEEL	5	GALVANISED	DAER
46101016	MILTON ROAD	Scunthorpe	489912.81	408182.03	10	7009	00191237	01/04/1980 00:00	1	3	LESS THAN 30MPH	FRONT OF FOOTPATH	300	SINGLE ARM	NOT APPLICABLE	RIGID COLUMN	URBIS	AXIA 2 S1	PETITJEAN	SHEET STEEL	5	GALVANISED	DAER
46101016	MILTON ROAD	Scunthorpe	489913.64	408157.33	11	7010	00191238	01/04/1980 00:00	1	3	LESS THAN 30MPH	FRONT OF FOOTPATH	300	SINGLE ARM	NOT APPLICABLE	RIGID COLUMN	URBIS	AXIA 2 S1	PETITJEAN	SHEET STEEL	5	GALVANISED	DAER
46101016	MILTON ROAD	Scunthorpe	489921.75	408140.49	12	7011	00191239	01/04/1980 00:00	1	3	LESS THAN 30MPH	FRONT OF FOOTPATH	300	SINGLE ARM	NOT APPLICABLE	RIGID COLUMN	URBIS	AXIA 2 S1	PETITJEAN	SHEET STEEL	5	GALVANISED	DAER
46101016	MILTON ROAD	Scunthorpe	489922.88	408111.82	13	7012	00191240	01/04/1980 00:00	1	3	LESS THAN 30MPH	FRONT OF FOOTPATH	300	SINGLE ARM	NOT APPLICABLE	RIGID COLUMN	URBIS	AXIA 2 S1	PETITJEAN	SHEET STEEL	5	GALVANISED	DAER
46101016	MILTON ROAD	Scunthorpe	489917.26	408083.17	14	7013	00191241	01/04/1980 00:00	1	3	LESS THAN 30MPH	FRONT OF FOOTPATH	300	SINGLE ARM	NOT APPLICABLE	RIGID COLUMN	URBIS	AXIA 2 S1	PETITJEAN	SHEET STEEL	5	GALVANISED	DAER
46101016	MILTON ROAD	Scunthorpe	489904.82	408399.54	2	7001	00191229	01/04/1980 00:00	1	3	LESS THAN 30MPH	FRONT OF FOOTPATH	300	SINGLE ARM	NOT APPLICABLE	RIGID COLUMN	URBIS	AXIA 2 S1	PETITJEAN	SHEET STEEL	5	GALVANISED	DAER
46101016	MILTON ROAD	Scunthorpe	489913.02	408366.96	3	7002	00191230	01/04/1980 00:00	1	3	LESS THAN 30MPH	FRONT OF FOOTPATH	300	SINGLE ARM	NOT APPLICABLE	RIGID COLUMN	URBIS	AXIA 2 S1	PETITJEAN	SHEET STEEL	5	GALVANISED	DAER
46101016	MILTON ROAD	Scunthorpe	489907.16	408336.65	4	7003	00191231	01/04/1980 00:00	1	3	LESS THAN 30MPH	FRONT OF FOOTPATH	300	SINGLE ARM	NOT APPLICABLE	RIGID COLUMN	URBIS	AXIA 2 S1	PETITJEAN	SHEET STEEL	5	GALVANISED	DAER
46101016	MILTON ROAD	Scunthorpe	489914.9	408313.42	5	7004	00191232	01/04/1980 00:00	1	3	LESS THAN 30MPH	FRONT OF FOOTPATH	300	SINGLE ARM	NOT APPLICABLE	RIGID COLUMN	URBIS	AXIA 2 S1	PETITJEAN	SHEET STEEL	5	GALVANISED	DAER
46101016	MILTON ROAD	Scunthorpe	489908.91	408292.56	6	7005	00191233	01/04/1980 00:00	1	3	LESS THAN 30MPH	FRONT OF FOOTPATH	300	SINGLE ARM	NOT APPLICABLE	RIGID COLUMN	URBIS	AXIA 2 S1	PETITJEAN	SHEET STEEL	5	GALVANISED	DAER
46101016	MILTON ROAD	Scunthorpe	489917.1	408266.33	7	7006	00191234	01/04/1980 00:00	1	3	LESS THAN 30MPH	FRONT OF FOOTPATH	300	SINGLE ARM	NOT APPLICABLE	RIGID COLUMN	URBIS	AXIA 2 S1	PETITJEAN	SHEET STEEL	5	GALVANISED	DAER
46101016	MILTON ROAD	Scunthorpe	489911.52	408233.48	8	7007	00191235	01/04/1980 00:00	1	3	LESS THAN 30MPH	FRONT OF FOOTPATH	300	SINGLE ARM	NOT APPLICABLE	RIGID COLUMN	URBIS	AXIA 2 S1	PETITJEAN	SHEET STEEL	5	GALVANISED	DAER
46101016	MILTON ROAD	Scunthorpe	489919.71	408208.55	9	7008	00191236	01/04/1980 00:00	1	3	LESS THAN 30MPH	FRONT OF FOOTPATH	300	SINGLE ARM	NOT APPLICABLE	RIGID COLUMN	URBIS	AXIA 2 S1	PETITJEAN	SHEET STEEL	5	GALVANISED	DAER
46101017	MINSTER ROAD	Gunness Parish	487184.7	410743.27	1	7002	00191244	03/10/2019 00:00	2	3	LESS THAN 30MPH	FRONT OF FOOTPATH	0	POST TOP	NOT APPLICABLE	RIGID COLUMN	URBIS	AXIA 2 S1	MALLATITE	TUBULAR STEEL	6	GALVANISED	TUBULAR
46101017	MINSTER ROAD	Gunness Parish	487146.93	410752.97	2	7003	00191245	03/10/2019 00:00	2	3	LESS THAN 30MPH	FRONT OF FOOTPATH	0	POST TOP	NOT APPLICABLE	RIGID COLUMN	URBIS	AXIA 2 S1	MALLATITE	TUBULAR STEEL	6	GALVANISED	TUBULAR
46101017	MINSTER ROAD	Gunness Parish	487110.71	410747.73	3	7004	00191246	01/04/1980 00:00	2	3	LESS THAN 30MPH	FRONT OF FOOTPATH	300	SINGLE ARM	NOT APPLICABLE	RIGID COLUMN	URBIS	AXIA 2 S1	PETITJEAN	SHEET STEEL	5	GALVANISED	DAER
46101017	MINSTER ROAD	Gunness Parish	487082.22	410756.75	4	7005	00191247	03/10/2019 00:00	2	3	LESS THAN 30MPH	FRONT OF FOOTPATH	0	POST TOP	NOT APPLICABLE	RIGID COLUMN	URBIS	AXIA 2 S1	MALLATITE	TUBULAR STEEL	6	GALVANISED	TUBULAR
46101017	MINSTER ROAD	Gunness Parish	487050.25	410749.74	5	7006	00191248	01/04/1970 00:00	2	3	LESS THAN 30MPH	BACK OF FOOTPATH	300	SINGLE ARM	NOT APPLICABLE	RIGID COLUMN	URBIS	AXIA 2 S1	CU	TUBULAR STEEL	6	GALVANISED	STEPPED TUBULAR
46101017	MINSTER ROAD	Gunness Parish	487019.36	410753.55	6	7007	00191249	01/04/2010 00:00	2	3	LESS THAN 30MPH	FRONT OF FOOTPATH	0	POST TOP	NOT APPLICABLE	RIGID COLUMN	URBIS	AXIA 2 S1	MALLATITE	TUBULAR STEEL	6	GALVANISED	TUBULAR
46101017	MINSTER ROAD	Gunness Parish	486970.59	410757.1	7	7000	00191242	01/04/1980 00:00	2	2	LESS THAN 30MPH	VERGE	0	POST TOP	LIGHT GREY	RIGID COLUMN	URBIS	AXIA 2 S1	PETITJEAN	SHEET STEEL	5	PAINTED	NIDD
46101017	MINSTER ROAD	Gunness Parish	486936.11	410759.88	8	7001	00191243	01/04/1980 00:00	2	2	LESS THAN 30MPH	VERGE	0	POST TOP	LIGHT GREY	RIGID COLUMN	URBIS	AXIA 2 S1	PETITJEAN	SHEET STEEL	5	PAINTED	NIDD
46101018	MIRFIELD ROAD	Scunthorpe	487555.64	411535.12	1	7000	00191250	01/04/2001 00:00	2	3	LESS THAN 30MPH	BACK OF FOOTPATH	0	POST TOP	NOT APPLICABLE	RIGID COLUMN	URBIS	AXIA 2 S1	MALLATITE	TUBULAR STEEL	6	GALVANISED	STEPPED TUBULAR
46101018	MIRFIELD ROAD	Scunthorpe	487522.71	411545.29	2	7001	00191251	01/04/2001 00:00	2	3	LESS THAN 30MPH	BACK OF FOOTPATH	0	POST TOP	NOT APPLICABLE	RIGID COLUMN	URBIS	AXIA 2 S1	MALLATITE	TUBULAR STEEL	6	GALVANISED	STEPPED TUBULAR
46101018	MIRFIELD ROAD	Scunthorpe	487488.72	411535.33	3	7002	00191252	01/04/2001 00:00	2	3	LESS THAN 30MPH	BACK OF FOOTPATH	0	POST TOP	NOT APPLICABLE	RIGID COLUMN	URBIS	AXIA 2 S1	MALLATITE	TUBULAR STEEL	6	GALVANISED	STEPPED TUBULAR
46101018	MIRFIELD ROAD	Scunthorpe	487459.6	411544.9	4	7003	00191253	01/04/2001 00:00	2	3	LESS THAN 30MPH	BACK OF FOOTPATH	0	POST TOP	NOT APPLICABLE	RIGID COLUMN	URBIS	AXIA 2 S1	MALLATITE	TUBULAR STEEL	6	GALVANISED	STEPPED TUBULAR
46101018	MIRFIELD ROAD	Scunthorpe	487428.28	411535.25	5	7004	00191254	01/04/2001 00:00	2	3	LESS THAN 30MPH	BACK OF FOOTPATH	0	POST TOP	NOT APPLICABLE	RIGID COLUMN	URBIS	AXIA 2 S1	MALLATITE	TUBULAR STEEL	6	GALVANISED	STEPPED TUBULAR
46101018	MIRFIELD ROAD	Scunthorpe	487397.76	411544.9	6	7005	00191255	01/04/2001 00:00	2	3	LESS THAN 30MPH	BACK OF FOOTPATH	0	POST TOP	NOT APPLICABLE	RIGID COLUMN	URBIS	AXIA 2 S1	MALLATITE	TUBULAR STEEL	6	GALVANISED	STEPPED TUBULAR
46101019	MOAT HOUSE ROAD	Kirton in Lindsey Parish	493265.68	398638.65	1	7000	00191256	01/09/2018 00:00	1	3	LESS THAN 30MPH	ON POLE	500	SINGLE ARM	DARK GREY	POLE MOUNTED	URBIS	AXIA 2 S1	WOODEN PO	ALUMINIUM	6	PAINTED	PUDSEY DIAMOND
46101019	MOAT HOUSE ROAD	Kirton in Lindsey Parish	493228.14	398619.87	2	7001	00191257	01/04/1977 00:00	1	3	LESS THAN 30MPH	ON POLE	500	SINGLE ARM	NOT APPLICABLE	POLE MOUNTED	URBIS	AXIA 2 S1	WOODEN PO	WOOD	6	NOT APPLICABI	Not Applicable
46101019	MOAT HOUSE ROAD	Kirton in Lindsey Parish	493229	398563.21	3	7002	00191258	01/04/1977 00:00	1	3	LESS THAN 30MPH	ON POLE	500	SINGLE ARM	NOT APPLICABLE	POLE MOUNTED	URBIS	AXIA 2 S1	WOODEN PO	WOOD	6	NOT APPLICABI	Not Applicable
46101019	MOAT HOUSE ROAD	Kirton in Lindsey Parish	493243.22	398539.27	4	7003	00191259	01/04/1978 00:00	1	3	LESS THAN 30MPH	ON POLE	500	SINGLE ARM	NOT APPLICABLE	POLE MOUNTED	URBIS	AXIA 2 S1	WOODEN PO	WOOD	6	NOT APPLICABI	Not Applicable
46101019	MOAT HOUSE ROAD	Kirton in Lindsey Parish	493260.52	398515.03	5	7004	00191260	01/04/1978 00:00	1	3	LESS THAN 30MPH	VERGE	800	SINGLE ARM	LIGHT GREY	RIGID COLUMN	URBIS	AXIA 2 S1	PETITJEAN	SHEET STEEL	5	PAINTED	DAER
46101019	MOAT HOUSE ROAD	Kirton in Lindsey Parish	493272.64	398473.17	6	7005	00191261	01/04/1978 00:00	1	3	LESS THAN 30MPH	VERGE	800	SINGLE ARM	LIGHT GREY	RIGID COLUMN	URBIS	AXIA 2 S1	PETITJEAN	SHEET STEEL	5	PAINTED	DAER
46101019	MOAT HOUSE ROAD	Kirton in Lindsey Parish	493276.65	398424.94	7FP	7006	00191262	01/04/1978 00:00	1	3	LESS THAN 30MPH	VERGE	800	SINGLE ARM	LIGHT GREY	RIGID COLUMN	URBIS	AXIA 2 S1	PETITJEAN	SHEET STEEL	5	PAINTED	DAER
46101019	MOAT HOUSE ROAD	Kirton in Lindsey Parish	493305.44	398405.86	8	7007	00191263	01/04/1978 00:00	1	3	LESS THAN 30MPH	BACK OF FOOTPATH	800	SINGLE ARM	LIGHT GREY	RIGID COLUMN	URBIS	AXIA 2 S1	PETITJEAN	SHEET STEEL	5	PAINTED	DAER
46101019	MOAT HOUSE ROAD	Kirton in Lindsey Parish	493336.88	398381.86	9	7008	00191264	01/04/1978 00:00	1	3	LESS THAN 30MPH	BACK OF FOOTPATH	800	SINGLE ARM	LIGHT GREY	RIGID COLUMN	URBIS	AXIA 2 S1	PETITJEAN	SHEET STEEL	5	PAINTED	DAER
46101020	MOAT LANE	South Killingholme Parish	514976.19	416398.54	1	7000	00191265	01/04/2001 00:00	3	1	LESS THAN 30MPH	BACK OF FOOTPATH	0	POST TOP	NOT APPLICABLE	RIGID COLUMN	URBIS	AXIA 2 S1	MALLATITE	TUBULAR STEEL	6	GALVANISED	STEPPED TUBULAR
46101020	MOAT LANE	South Killingholme Parish	514965.27	416422.85	2	7001	00191266	21/07/2020 00:00	3	1	LESS THAN 30MPH	BACK OF FOOTPATH	0	POST TOP	NOT APPLICABLE	RIGID COLUMN	URBIS	AXIA 2 S1	MALLATITE	TUBULAR STEEL	6	GALVANISED	TUBULAR
46101020	MOAT LANE	South Killingholme Parish	514951.69	416434.09	3	7002	00191267	01/04/2001 00:00	3	1	LESS THAN 30MPH	BACK OF FOOTPATH	0	POST TOP	NOT APPLICABLE	RIGID COLUMN	URBIS	AXIA 2 S1	MALLATITE	TUBULAR STEEL	6	GALVANISED	STEPPED TUBULAR
46101020	MOAT LANE	South Killingholme Parish	514949.75	416455.38	4	7003	00191268	01/04/1995 00:00	3	1	LESS THAN 30MPH	BACK OF FOOTPATH	0	POST TOP	LIGHT GREY	RIGID COLUMN	URBIS	AXIA 2 S1	PETITJEAN	SHEET STEEL	5	PAINTED	NIDD
46101021	MODDER STREET	Scunthorpe	489557.44	408655.73	1	7000	00191269	01/04/2010 00:00	2	4	LESS THAN 30MPH	BACK OF FOOTPATH	0	POST TOP	NOT APPLICABLE	RIGID COLUMN	URBIS	AXIA 2 S1	T AND L	TUBULAR STEEL	5	GALVANISED	TUBULAR
46101021	MODDER STREET	Scunthorpe	489555.88	408689.43	2	7001	00191270	01/04/2010 00:00	2	4	LESS THAN 30MPH	BACK OF FOOTPATH	0	POST TOP	NOT APPLICABLE	RIGID COLUMN	URBIS	AXIA 2 S1	CU	TUBULAR STEEL	6	GALVANISED	STEPPED TUBULAR
46101022	MONKS ROAD	Scunthorpe	488887.17	408847.47	1	7000	00191271	01/04/1993 00:00	5	2	LESS THAN 30MPH	BACK OF FOOTPATH	800	SINGLE ARM	NOT APPLICABLE	RIGID COLUMN	URBIS	AXIA 2 S1	PETITJEAN	SHEET STEEL	6	GALVANISED	DAER
46101022	MONKS ROAD	Scunthorpe	488875.65	408824.85	2	7001	00191272	01/04/1993 00:00	5	2	LESS THAN 30MPH	BACK OF FOOTPATH	800	SINGLE ARM	NOT APPLICABLE	RIGID COLUMN	URBIS	AXIA 2 S1	PETITJEAN	SHEET STEEL	6	GALVANISED	DAER
46101022	MONKS ROAD	Scunthorpe	488876.68	408796.77	3	7002	00191273	01/04/1993 00:00	5	2	LESS THAN 30MPH	BACK OF FOOTPATH	800	SINGLE ARM	NOT APPLICABLE	RIGID COLUMN	URBIS	AXIA 2 S1	PETITJEAN	SHEET STEEL	6	GALVANISED	DAER
46101022	MONKS ROAD	Scunthorpe	488889	408770.46	4	7003	00191274	01/04/1993 00:00	5	2	LESS THAN 30MPH	BACK OF FOOTPATH	800	SINGLE ARM	NOT APPLICABLE	RIGID COLUMN	URBIS	AXIA 2 S1	PETITJEAN	SHEET STEEL	6	GALVANISED	DAER
46101022	MONKS ROAD	Scunthorpe	488877.43	408737.9	5	7004	00191275	01/04/1993 00:00	5	2	LESS THAN 30MPH	BACK OF FOOTPATH	800	SINGLE ARM	NOT APPLICABLE	RIGID COLUMN	URBIS	AXIA 2 S1	PETITJEAN	SHEET STEEL	6	GALVANISED	DAER
46101022	MONKS ROAD	Scunthorpe	488890.32	408704.69	6	7005	00191276	01/04/1993 00:00	5	2	LESS THAN 30MPH	BACK OF FOOTPATH	800	SINGLE ARM	NOT APPLICABLE	RIGID COLUMN	URBIS	AXIA 2 S1	PETITJEAN	SHEET STEEL	6	GALVANISED	DAER
46101022	MONKS ROAD	Scunthorpe	488890.99	408676.36	7	7006	00191277	01/04/1993 00:00	5	2	LESS THAN 30MPH	BACK OF FOOTPATH	800	SINGLE ARM	NOT APPLICABLE	RIGID COLUMN	URBIS	AXIA 2 S1	PETITJEAN	SHEET STEEL	6	GALVANISED	DAER
46101022	MONKS ROAD	Scunthorpe	488879.81	408644.57	8	7007	00191278	01/04/1993 00:00	5	2	LESS THAN 30MPH	BACK OF FOOTPATH	800	SINGLE ARM	NOT APPLICABLE	RIGID COLUMN	URBIS	AXIA 2 S1	PETITJEAN	SHEET STEEL	6	GALVANISED	DAER
46101023	MONTROSE STREET	Scunthorpe	489522.18	410597.26	1	7000	00191279	01/04/1980 00:00	2	4	LESS THAN 30MPH	BACK OF FOOTPATH	300	SINGLE ARM	NOT APPLICABLE	RIGID COLUMN	URBIS	AXIA 2 S1	PETITJEAN	SHEET STEEL	5	GALVANISED	DAER
46101023	MONTROSE STREET	Scunthorpe	489522.43	410563.92	2	7001	00191280	01/04/1980 00:00	2	4	LESS THAN 30MPH	BACK OF FOOTPATH	300	SINGLE ARM	NOT APPLICABLE	RIGID COLUMN	URBIS	AXIA 2 S1	PETITJEAN	SHEET STEEL	5	GALVANISED	DAER
46101023	MONTROSE STREET	Scunthorpe	489535.07	410532.73	3	7002	00191281	01/04/1980 00:00	2	4	LESS THAN 30MPH	BACK OF FOOTPATH	300	SINGLE ARM	NOT APPLICABLE	RIGID COLUMN	URBIS	AXIA 2 S1	PETITJEAN	SHEET STEEL	5	GALVANISED	DAER
46101025	MOOR ROAD	Bottesford Parish	487540.88	406882.96	1	7000	00191282	01/04/1980 00:00	3	1	LESS THAN 30MPH	VERGE	1000	SINGLE ARM	MID GREY	RIGID COLUMN	URBIS	AXIA 2 S1	PETITJEAN	SHEET STEEL	8	PAINTED	THAMES
46101027	MOORLAND WAY	Epworth Parish	478217.96	403656.52	1	7000	00191283	01/04/1980 00:00	5	3	LESS THAN 30MPH	BACK OF FOOTPATH	0	POST TOP	NOT APPLICABLE	RIGID COLUMN	URBIS	AXIA 2 S1	PETITJEAN	TUBULAR STEEL	5	GALVANISED	METRO
46101027	MOORLAND WAY	Epworth Parish	478190.21	403666.41	2	7001	00191284	01/04/1980 00:00	5	3	LESS THAN 30MPH	BACK OF FOOTPATH	0	POST TOP	NOT APPLICABLE	RIGID COLUMN	URBIS	AXIA 2 S1	PETITJEAN	TUBULAR STEEL	5	GALVANISED	METRO
46101027	MOORLAND WAY	Epworth Parish	478155.4	403661.71	3	7002	00191285	01/04/1980 00:00	5	3	LESS THAN 30MPH	FRONT OF FOOTPATH	0	POST T

46101050	NEWBORN AVENUE	Scunthorpe	488166.4	411846.65	7	7006	00191455	01/04/1995 00:00	6	3	LESS THAN 30MPH	BACK OF FOOTPATH	0	POST TOP	NOT APPLICABLE	RIGID COLUMN	URBIS	AXIA 2 S1	PETITJEAN	SHEET STEEL	6	GALVANISED	NIDD	
46101050	NEWBORN AVENUE	Scunthorpe	488201.63	411848.93	8	7007	00191456	01/04/1995 00:00	6	3	LESS THAN 30MPH	BACK OF FOOTPATH	0	POST TOP	NOT APPLICABLE	RIGID COLUMN	URBIS	AXIA 2 S1	PETITJEAN	SHEET STEEL	6	GALVANISED	NIDD	
46101051	NEWLAND AVENUE	Scunthorpe	488166.12	411198.1	1	7000	00191457	01/04/1993 00:00	2	3	LESS THAN 30MPH	BACK OF FOOTPATH	800	SINGLE ARM	NOT APPLICABLE	RIGID COLUMN	URBIS	AXIA 2 S1	PETITJEAN	SHEET STEEL	6	GALVANISED	DAER	
46101051	NEWLAND AVENUE	Scunthorpe	488161.77	410947.33	10	7009	00191466	01/04/1993 00:00	2	3	LESS THAN 30MPH	BACK OF FOOTPATH	800	SINGLE ARM	NOT APPLICABLE	RIGID COLUMN	URBIS	AXIA 2 S1	PETITJEAN	SHEET STEEL	6	GALVANISED	DAER	
46101051	NEWLAND AVENUE	Scunthorpe	488153.67	410923.75	11	7010	00191467	01/04/1993 00:00	2	3	LESS THAN 30MPH	BACK OF FOOTPATH	800	SINGLE ARM	NOT APPLICABLE	RIGID COLUMN	URBIS	AXIA 2 S1	PETITJEAN	SHEET STEEL	6	GALVANISED	DAER	
46101051	NEWLAND AVENUE	Scunthorpe	488140.85	410896.65	12	7011	00191468	01/04/1993 00:00	2	3	LESS THAN 30MPH	BACK OF FOOTPATH	800	SINGLE ARM	NOT APPLICABLE	RIGID COLUMN	URBIS	AXIA 2 S1	PETITJEAN	SHEET STEEL	6	GALVANISED	DAER	
46101051	NEWLAND AVENUE	Scunthorpe	488138.33	410868.73	13	7012	00191469	01/04/1993 00:00	2	3	LESS THAN 30MPH	BACK OF FOOTPATH	800	SINGLE ARM	NOT APPLICABLE	RIGID COLUMN	URBIS	AXIA 2 S1	PETITJEAN	SHEET STEEL	6	GALVANISED	DAER	
46101051	NEWLAND AVENUE	Scunthorpe	488136.49	410836.36	14	7013	00191470	01/04/1993 00:00	2	3	LESS THAN 30MPH	BACK OF FOOTPATH	800	SINGLE ARM	NOT APPLICABLE	RIGID COLUMN	URBIS	AXIA 2 S1	PETITJEAN	SHEET STEEL	6	GALVANISED	DAER	
46101051	NEWLAND AVENUE	Scunthorpe	488145.74	410812.37	15	7014	00191471	01/04/1993 00:00	2	3	LESS THAN 30MPH	BACK OF FOOTPATH	800	SINGLE ARM	NOT APPLICABLE	RIGID COLUMN	URBIS	AXIA 2 S1	PETITJEAN	SHEET STEEL	6	GALVANISED	DAER	
46101051	NEWLAND AVENUE	Scunthorpe	488132.8	410781.83	16	7015	00191472	01/04/1993 00:00	2	3	LESS THAN 30MPH	BACK OF FOOTPATH	800	SINGLE ARM	NOT APPLICABLE	RIGID COLUMN	URBIS	AXIA 2 S1	PETITJEAN	SHEET STEEL	6	GALVANISED	DAER	
46101051	NEWLAND AVENUE	Scunthorpe	488141.99	410751.17	17	7016	00191473	01/04/1993 00:00	2	3	LESS THAN 30MPH	BACK OF FOOTPATH	800	SINGLE ARM	NOT APPLICABLE	RIGID COLUMN	URBIS	AXIA 2 S1	PETITJEAN	SHEET STEEL	6	GALVANISED	DAER	
46101051	NEWLAND AVENUE	Scunthorpe	488156.05	411172.54	2	7001	00191458	01/04/1993 00:00	2	3	LESS THAN 30MPH	BACK OF FOOTPATH	800	SINGLE ARM	NOT APPLICABLE	RIGID COLUMN	URBIS	AXIA 2 S1	PETITJEAN	SHEET STEEL	6	GALVANISED	DAER	
46101051	NEWLAND AVENUE	Scunthorpe	488158.96	411144.42	3	7002	00191459	01/04/1993 00:00	2	3	LESS THAN 30MPH	BACK OF FOOTPATH	800	SINGLE ARM	NOT APPLICABLE	RIGID COLUMN	URBIS	AXIA 2 S1	PETITJEAN	SHEET STEEL	6	GALVANISED	DAER	
46101051	NEWLAND AVENUE	Scunthorpe	488161	411120.42	4	7003	00191460	01/04/1993 00:00	2	3	LESS THAN 30MPH	BACK OF FOOTPATH	800	SINGLE ARM	NOT APPLICABLE	RIGID COLUMN	URBIS	AXIA 2 S1	PETITJEAN	SHEET STEEL	6	GALVANISED	DAER	
46101051	NEWLAND AVENUE	Scunthorpe	488175.94	411093.16	5	7004	00191461	01/04/1993 00:00	2	3	LESS THAN 30MPH	BACK OF FOOTPATH	800	SINGLE ARM	NOT APPLICABLE	RIGID COLUMN	URBIS	AXIA 2 S1	PETITJEAN	SHEET STEEL	6	GALVANISED	DAER	
46101051	NEWLAND AVENUE	Scunthorpe	488178.93	411061.49	6	7005	00191462	01/04/1993 00:00	2	3	LESS THAN 30MPH	BACK OF FOOTPATH	800	SINGLE ARM	NOT APPLICABLE	RIGID COLUMN	URBIS	AXIA 2 S1	PETITJEAN	SHEET STEEL	6	GALVANISED	DAER	
46101051	NEWLAND AVENUE	Scunthorpe	488182.46	411028.92	7	7006	00191463	01/04/1993 00:00	2	3	LESS THAN 30MPH	BACK OF FOOTPATH	800	SINGLE ARM	NOT APPLICABLE	RIGID COLUMN	URBIS	AXIA 2 S1	PETITJEAN	SHEET STEEL	6	GALVANISED	DAER	
46101051	NEWLAND AVENUE	Scunthorpe	488173.76	410996.37	8	7007	00191464	01/04/1993 00:00	2	3	LESS THAN 30MPH	BACK OF FOOTPATH	800	SINGLE ARM	NOT APPLICABLE	RIGID COLUMN	URBIS	AXIA 2 S1	PETITJEAN	SHEET STEEL	6	GALVANISED	DAER	
46101051	NEWLAND AVENUE	Scunthorpe	488182.71	410970.13	9FP	7008	00191465	01/04/1993 00:00	2	3	LESS THAN 30MPH	BACK OF FOOTPATH	800	SINGLE ARM	NOT APPLICABLE	RIGID COLUMN	URBIS	AXIA 2 S1	PETITJEAN	SHEET STEEL	6	GALVANISED	DAER	
46101052	NEWLAND DRIVE	Scunthorpe	488162.18	411020.11	1	7000	00191474	01/04/2001 00:00	2	3	LESS THAN 30MPH	BACK OF FOOTPATH	800	SINGLE ARM	NOT APPLICABLE	RIGID COLUMN	URBIS	AXIA 2 S1	MALLATITE	TUBULAR STEEL	6	GALVANISED	STEPPED TUBULAR	
46101052	NEWLAND DRIVE	Scunthorpe	487955.71	411093.98	10	7009	00191483	01/04/2001 00:00	2	3	LESS THAN 30MPH	BACK OF FOOTPATH	800	SINGLE ARM	NOT APPLICABLE	RIGID COLUMN	URBIS	AXIA 2 S1	MALLATITE	TUBULAR STEEL	6	GALVANISED	STEPPED TUBULAR	
46101052	NEWLAND DRIVE	Scunthorpe	487993.75	411104.74	11	7010	00191484	01/04/2001 00:00	2	3	LESS THAN 30MPH	BACK OF FOOTPATH	800	SINGLE ARM	NOT APPLICABLE	RIGID COLUMN	URBIS	AXIA 2 S1	MALLATITE	TUBULAR STEEL	6	GALVANISED	STEPPED TUBULAR	
46101052	NEWLAND DRIVE	Scunthorpe	488029.65	411094.56	12	7011	00191485	01/04/2001 00:00	2	3	LESS THAN 30MPH	BACK OF FOOTPATH	800	SINGLE ARM	NOT APPLICABLE	RIGID COLUMN	URBIS	AXIA 2 S1	MALLATITE	TUBULAR STEEL	6	GALVANISED	STEPPED TUBULAR	
46101052	NEWLAND DRIVE	Scunthorpe	488058.55	411105.24	13	7012	00191486	01/04/2001 00:00	2	3	LESS THAN 30MPH	BACK OF FOOTPATH	800	SINGLE ARM	NOT APPLICABLE	RIGID COLUMN	URBIS	AXIA 2 S1	MALLATITE	TUBULAR STEEL	6	GALVANISED	STEPPED TUBULAR	
46101052	NEWLAND DRIVE	Scunthorpe	488094.91	411095.26	14	7013	00191487	01/04/2001 00:00	2	3	LESS THAN 30MPH	BACK OF FOOTPATH	800	SINGLE ARM	NOT APPLICABLE	RIGID COLUMN	URBIS	AXIA 2 S1	MALLATITE	TUBULAR STEEL	6	GALVANISED	STEPPED TUBULAR	
46101052	NEWLAND DRIVE	Scunthorpe	488126.61	411095.47	15	7014	00191488	01/04/2001 00:00	2	3	LESS THAN 30MPH	BACK OF FOOTPATH	800	SINGLE ARM	NOT APPLICABLE	RIGID COLUMN	URBIS	AXIA 2 S1	MALLATITE	TUBULAR STEEL	6	GALVANISED	STEPPED TUBULAR	
46101052	NEWLAND DRIVE	Scunthorpe	488154.32	411095.72	16	7015	00191489	01/04/2001 00:00	2	3	LESS THAN 30MPH	BACK OF FOOTPATH	800	SINGLE ARM	NOT APPLICABLE	RIGID COLUMN	URBIS	AXIA 2 S1	MALLATITE	TUBULAR STEEL	6	GALVANISED	STEPPED TUBULAR	
46101052	NEWLAND DRIVE	Scunthorpe	488136.17	411019.82	2	7001	00191475	01/04/2001 00:00	2	3	LESS THAN 30MPH	BACK OF FOOTPATH	800	SINGLE ARM	NOT APPLICABLE	RIGID COLUMN	URBIS	AXIA 2 S1	MALLATITE	TUBULAR STEEL	6	GALVANISED	STEPPED TUBULAR	
46101052	NEWLAND DRIVE	Scunthorpe	488098.88	411030.86	3	7002	00191476	01/04/2001 00:00	2	3	LESS THAN 30MPH	BACK OF FOOTPATH	800	SINGLE ARM	NOT APPLICABLE	RIGID COLUMN	URBIS	AXIA 2 S1	MALLATITE	TUBULAR STEEL	6	GALVANISED	STEPPED TUBULAR	
46101052	NEWLAND DRIVE	Scunthorpe	488064.88	411030.18	4	7003	00191477	01/04/2001 00:00	2	3	LESS THAN 30MPH	BACK OF FOOTPATH	800	SINGLE ARM	NOT APPLICABLE	RIGID COLUMN	URBIS	AXIA 2 S1	MALLATITE	TUBULAR STEEL	6	GALVANISED	STEPPED TUBULAR	
46101052	NEWLAND DRIVE	Scunthorpe	488024.85	411019.62	5	7004	00191478	01/04/2001 00:00	2	3	LESS THAN 30MPH	BACK OF FOOTPATH	800	SINGLE ARM	NOT APPLICABLE	RIGID COLUMN	URBIS	AXIA 2 S1	MALLATITE	TUBULAR STEEL	6	GALVANISED	STEPPED TUBULAR	
46101052	NEWLAND DRIVE	Scunthorpe	487988.56	411019.22	6	7005	00191479	01/04/2001 00:00	2	3	LESS THAN 30MPH	BACK OF FOOTPATH	800	SINGLE ARM	NOT APPLICABLE	RIGID COLUMN	URBIS	AXIA 2 S1	MALLATITE	TUBULAR STEEL	6	GALVANISED	STEPPED TUBULAR	
46101052	NEWLAND DRIVE	Scunthorpe	487958.82	411024.44	7	7006	00191480	01/04/2001 00:00	2	3	LESS THAN 30MPH	BACK OF FOOTPATH	800	SINGLE ARM	NOT APPLICABLE	RIGID COLUMN	URBIS	AXIA 2 S1	MALLATITE	TUBULAR STEEL	6	GALVANISED	STEPPED TUBULAR	
46101052	NEWLAND DRIVE	Scunthorpe	487951.3	411047.56	8	7007	00191481	01/04/2001 00:00	2	3	LESS THAN 30MPH	BACK OF FOOTPATH	800	SINGLE ARM	NOT APPLICABLE	RIGID COLUMN	URBIS	AXIA 2 S1	MALLATITE	TUBULAR STEEL	6	GALVANISED	STEPPED TUBULAR	
46101052	NEWLAND DRIVE	Scunthorpe	487962.65	411072.3	9	7008	00191482	01/04/2001 00:00	2	3	LESS THAN 30MPH	BACK OF FOOTPATH	800	SINGLE ARM	NOT APPLICABLE	RIGID COLUMN	URBIS	AXIA 2 S1	MALLATITE	TUBULAR STEEL	6	GALVANISED	STEPPED TUBULAR	
46101053	NEWLAND VIEW	Epworth Parish	478813.57	403667.74	1	7000	00191490	12/12/2018 00:00	5	3	LESS THAN 30MPH	BACK OF FOOTPATH	0	POST TOP	NOT APPLICABLE	RIGID COLUMN	URBIS	AXIA 2 S1	MALLATITE	TUBULAR STEEL	6	GALVANISED	TUBULAR	
46101053	NEWLAND VIEW	Epworth Parish	478842.09	403673.32	2	7001	00191491	01/04/1980 00:00	5	3	LESS THAN 30MPH	BACK OF FOOTPATH	0	POST TOP	NOT APPLICABLE	RIGID COLUMN	URBIS	AXIA 2 S1	PETITJEAN	SHEET STEEL	5	GALVANISED	NIDD	
46101053	NEWLAND VIEW	Epworth Parish	478870.03	403682.48	3	7002	00191492	01/04/1980 00:00	5	3	LESS THAN 30MPH	BACK OF FOOTPATH	0	POST TOP	NOT APPLICABLE	RIGID COLUMN	URBIS	AXIA 2 S1	PETITJEAN	SHEET STEEL	5	GALVANISED	NIDD	
46101053	NEWLAND VIEW	Epworth Parish	478902.65	403686.59	4	7003	00191493	01/04/1980 00:00	5	3	LESS THAN 30MPH	BACK OF FOOTPATH	0	POST TOP	NOT APPLICABLE	RIGID COLUMN	URBIS	AXIA 2 S1	PETITJEAN	SHEET STEEL	5	GALVANISED	NIDD	
46101053	NEWLAND VIEW	Epworth Parish	478915.1	403657.24	5	7004	00191494	01/04/1980 00:00	5	3	LESS THAN 30MPH	BACK OF FOOTPATH	0	POST TOP	NOT APPLICABLE	RIGID COLUMN	URBIS	AXIA 2 S1	PETITJEAN	SHEET STEEL	5	GALVANISED	NIDD	
46101054	NEWLANDS WALK	Scunthorpe	488136.75	411189.99	1	7000	00191495	18/05/2020 00:00	2	3	LESS THAN 30MPH	BACK OF FOOTPATH	0	POST TOP	NOT APPLICABLE	RIGID COLUMN	URBIS	AXIA 2 S1	MALLATITE	TUBULAR STEEL	6	GALVANISED	TUBULAR	
46101054	NEWLANDS WALK	Scunthorpe	488098.14	411184.64	2	7001	00191496	18/05/2020 00:00	2	3	LESS THAN 30MPH	BACK OF FOOTPATH	0	POST TOP	NOT APPLICABLE	RIGID COLUMN	URBIS	AXIA 2 S1	MALLATITE	TUBULAR STEEL	6	GALVANISED	TUBULAR	
46101054	NEWLANDS WALK	Scunthorpe	488056.56	411178.59	3	7002	00191497	18/05/2020 00:00	2	3	LESS THAN 30MPH	BACK OF FOOTPATH	0	POST TOP	NOT APPLICABLE	RIGID COLUMN	URBIS	AXIA 2 S1	MALLATITE	TUBULAR STEEL	6	GALVANISED	TUBULAR	
46101054	NEWLANDS WALK	Scunthorpe	488015.53	411173.84	4	7003	00191498	18/05/2020 00:00	2	3	LESS THAN 30MPH	BACK OF FOOTPATH	0	POST TOP	NOT APPLICABLE	RIGID COLUMN	URBIS	AXIA 2 S1	MALLATITE	TUBULAR STEEL	6	GALVANISED	TUBULAR	
46101054	NEWLANDS WALK	Scunthorpe	487976.24	411170.23	5	7004	00191499	18/05/2020 00:00	2	3	LESS THAN 30MPH	BACK OF FOOTPATH	0	POST TOP	NOT APPLICABLE	RIGID COLUMN	URBIS	AXIA 2 S1	MALLATITE	TUBULAR STEEL	6	GALVANISED	TUBULAR	
46101055	NEWPORT DRIVE	Winterton Parish	493110.22	419038.55	1	7000	00191500	01/04/2002 00:00	1	1	LESS THAN 30MPH	BACK OF FOOTPATH	0	POST TOP	NOT APPLICABLE	RIGID COLUMN	URBIS	AXIA 2 S1	MALLATITE	TUBULAR STEEL	6	GALVANISED	STEPPED TUBULAR	
46101055	NEWPORT DRIVE	Winterton Parish	492832.53	419069.09	10	7009	00191509	01/04/2002 00:00	1	1	LESS THAN 30MPH	BACK OF FOOTPATH	0	POST TOP	NOT APPLICABLE	RIGID COLUMN	URBIS	AXIA 2 S1	MALLATITE	TUBULAR STEEL	6	GALVANISED	STEPPED TUBULAR	
46101055	NEWPORT DRIVE	Winterton Parish	492800.37	419055.82	11	7010	00191510	01/04/2002 00:00	1	1	LESS THAN 30MPH	BACK OF FOOTPATH	0	POST TOP	NOT APPLICABLE	RIGID COLUMN	URBIS	AXIA 2 S1	MALLATITE	TUBULAR STEEL	6	GALVANISED	STEPPED TUBULAR	
46101055	NEWPORT DRIVE	Winterton Parish	492775.22	419064.81	12	7011	00191511	01/04/2002 00:00	1	1	LESS THAN 30MPH	BACK OF FOOTPATH	0	POST TOP	NOT APPLICABLE	RIGID COLUMN	URBIS	AXIA 2 S1	MALLATITE	TUBULAR STEEL	6	GALVANISED	STEPPED TUBULAR	
46101055	NEWPORT DRIVE	Winterton Parish	493084	419050.71	2	7001	00191501	01/04/2002 00:00	1	1	LESS THAN 30MPH	BACK OF FOOTPATH	0	POST TOP	NOT APPLICABLE	RIGID COLUMN	URBIS	AXIA 2 S1	MALLATITE	TUBULAR STEEL	6	GALVANISED	STEPPED TUBULAR	
46101055	NEWPORT DRIVE	Winterton Parish	493048.19	419045.55	3	7002	00191502	01/04/2002 00:00	1	1	LESS THAN 30MPH	BACK OF FOOTPATH	0	POST TOP	NOT APPLICABLE	RIGID COLUMN	URBIS	AXIA 2 S1	MALLATITE	TUBULAR STEEL	6	GALVANISED	STEPPED TUBULAR	
46101055	NEWPORT DRIVE	Winterton Parish	493018.01	419057.81	4	7003	00191503	01/04/2002 00:00	1	1	LESS THAN 30MPH	BACK OF FOOTPATH	0	POST TOP	NOT APPLICABLE	RIGID COLUMN	URBIS	AXIA 2 S1	MALLATITE	TUBULAR STEEL	6	GALVANISED	STEPPED TUBULAR	
46101055	NEWPORT DRIVE	Winterton Parish	492983.82	419052.61	5	7004	00191504	01/04/2002 00:00	1	1	LESS THAN 30MPH	BACK OF FOOTPATH	0	POST TOP	NOT APPLICABLE	RIGID COLUMN	URBIS	AXIA 2 S1	MALLATITE	TUBULAR STEEL	6	GALVANISED	STEPPED TUBULAR	
46101055	NEWPORT DRIVE	Winterton Parish	492956.6	419066.67	6	7005	00191505	01/04/2002 00:00	1	1	LESS THAN 30MPH	BACK OF FOOTPATH	0	POST TOP	NOT APPLICABLE	RIGID COLUMN	URBIS	AXIA 2 S1	MALLATITE	TUBULAR STEEL	6	GALVANISED	STEPPED TUBULAR	
46101055	NEWPORT DRIVE	Winterton Parish	492921.5	419057.48	7	7006	00191506	01/04/2002 00:00	1	1	LESS THAN 30MPH	BACK OF FOOTPATH	0	POST TOP	NOT APPLICABLE	RIGID COLUMN	URBIS	AXIA 2 S1	MALLATITE	TUBULAR STEEL	6	GALVANISED	STEPPED TUBULAR	
46101055	NEWPORT DRIVE	Winterton Parish	492899.85	419069.94	8	7007	00191507	01/04/2002 00:00	1	1	LESS THAN 30MPH	BACK OF FOOTPATH	0	POST TOP	NOT APPLICABLE	RIGID COLUMN	URBIS	AXIA 2 S1	MALLATITE	TUBULAR STEEL	6	GALVANISED	STEPPED TUBULAR	
46101055	NEWPORT DRIVE	Winterton Parish	492866.98	419059.07	9	7008	00191508	01/04/2002 00:00	1	1	LESS THAN 30MPH	BACK OF FOOTPATH	0	POST TOP	NOT APPLICABLE	RIGID COLUMN	URBIS	AXIA 2 S1	MALLATITE	TUBULAR STEEL	6	GALVANISED	STEPPED TUBULAR	
46101056	NEWPORT	Barton upon Humber Parish	503160.56	422254.94	1	7000	00191512	01/04/1995 00:00	5	2	LESS THAN 30MPH	BACK OF FOOTPATH	800	SINGLE ARM	BLACK	RIGID COLUMN	SUGG	ROCHESTER MED	PETITJEAN	TUBULAR STEEL	6	PAINTED	STEPPED TUBULAR	
46101056	NEWPORT	Barton upon Humber Parish	502947.76	422309.12	10	7009	00191521	01/04/1995 00:00	5	2	LESS THAN 30MPH	BACK OF FOOTPATH	800	SINGLE ARM	BLACK	RIGID COLUMN	SUGG	ROCHESTER MED	PETITJEAN	TUBULAR STEEL	6	PAINTED	STEPPED TUBULAR	
46101056	NEWPORT	Barton upon Humber Parish	502922.98	422302.27	11	7010	00191522	01/04/1995 00:00	5	2	LESS THAN 30MPH	BACK OF FOOTPATH	800	SINGLE ARM	BLACK	RIGID COLUMN	SUGG	ROCHESTER MED	PETITJEAN	TUBULAR STEEL	6	PAINTED	STEPPED TUBULAR	
46101056	NEWPORT	Barton upon Humber Parish	502902.96	422317.38	12	7011	00191523	01/04/1995 00:00	5	2	LESS THAN 30MPH	BACK OF FOOTPATH	800	SINGLE ARM	BLACK	RIGID COLUMN	SUGG	ROCHESTER MED	PETITJEAN	TUBULAR STEEL	6	PAINTED	STEPPED TUBULAR	
46101056	NEWPORT	Barton upon Humber Parish	502884.77	422321.02	13	7012	00191524	01/04/1995 00:00	5	2	LESS THAN 30MPH	BACK OF FOOTPATH	800	SINGLE ARM	BLACK	RIGID COLUMN	SUGG	ROCHESTER MED	PETITJEAN	TUBULAR STEEL	6	PAINTED	STEPPED TUBULAR	
46101056	NEWPORT	Barton upon Humber Parish	502857.33	422327.04	14	7013	00191525	01/04/1995 05:00	5	2	LESS THAN 30MPH	BACK OF FOOTPATH	800	SINGLE ARM	BLACK	RIGID COLUMN	SUGG	ROCHESTER MED	PETITJEAN	TUBULAR STEEL	6	PAINTED	STEPPED TUBULAR	
46101056	NEWPORT	Barton upon Humber Parish	503135.09	422262.29	2	7001	00191513	01/04/1995 00:00	5	2	LESS THAN 30MPH	BACK OF FOOTPATH	800	SINGLE ARM	BLACK	RIGID COLUMN	SUGG	ROCHESTER MED	CU	TUBULAR STEEL	6	PAINTED	STEPPED TUBULAR	
46101056	NEWPORT	Barton upon Humber Parish	503113.32	422274.61	3	7002	00191514	01/04/1995 00:00	5	2	LESS THAN 30MPH	BACK OF FOOTPATH	800	SINGLE ARM	BLACK	RIGID COLUMN	SUGG	ROCHESTER MED	CU	TUBULAR STEEL	6	PAINTED	STEPPED TUBULAR	
46101056	NEWPORT	Barton upon Humber Parish	503087.35	422278.88	4	7003	00191515	01/04/1995 00:00	5	2	LESS THAN 30MPH	BACK OF FOOTPATH	800	SINGLE ARM	BLACK	RIGID COLUMN	SUGG	ROCHESTER MED	CU	TUBULAR STEEL	6	PAINTED	STEPPED TUBULAR	
46101056	NEWPORT	Barton upon Humber Parish	503062.98	422276.36	5	7004	00191516	01/04/1995 00:00	5	2	LESS THAN 30MPH	BACK OF FOOTPATH	800	SINGLE ARM	BLACK	RIGID COLUMN	SUGG	ROCHESTER MED	PETITJEAN	TUBULAR STEEL	6	PAINTED	STEPPED TUBULAR	
46101056	NEWPORT	Barton upon Humber Parish	503042.68	422287.98	6	7005	00191517	01/04/1995 00:00	5	2	LESS THAN 30MPH	BACK OF FOOTPATH	800	SINGLE ARM	BLACK	RIGID COLUMN	SUGG	ROCHESTER MED	CU	TUBULAR STEEL	6	PAINTED	STEPPED TUBULAR	
46101056	NEWPORT	Barton upon Humber Parish	503009.79	422284.9	7	7006	00191518	01/04/1995 00:00	5	2	LESS THAN 30MPH	BACK OF FOOTPATH	800	SINGLE ARM	BLACK	RIGID COLUMN	SUGG	ROCHESTER MED	PETITJEAN	TUBULAR STEEL	6	PAINTED	STEPPED TUBULAR	
46101056	NEWPORT	Barton upon Humber Parish	502990.74	422299.33	8	7007	00191519	01/04/1995 00:00	5	2	LESS THAN 30MPH	BACK OF FOOTPATH	800	SINGLE ARM	BLACK	RIGID COLUMN	SUGG	ROCHESTER MED	CU	TUBULAR STEEL	6	PAINTED	STEPPED TUBULAR	
46101056	NEWPORT	Barton upon Humber Parish	502962.32	422293.72	9	7008	00191520	01/04/1995 00:00	5	2	LESS THAN 30MPH	BACK OF FOOTPATH	800	SINGLE ARM	BLACK	RIGID COLUMN	SUGG	ROCHESTER MED	PETITJEAN	TUBULAR STEEL	6	PAINTED	STEPPED TUBULAR	
46101057	NEWTON ROAD	Scunthorpe	491179.19	408728.32	1	7000	00191526	01/04/2007 00:00	3	2	LESS THAN 30MPH	FRONT OF FOOTPATH	0	POST TOP	NOT APPLICABLE	RIGID COLUMN	URBIS	AXIA 2 S1	VALMONT ST	TUBULAR STEEL	6	GALVANISED	TUBULAR	
46101057	NEWTON ROAD	Scunthorpe	491186.38	408695.53	2	7001	00191527	15/01/2021 00:00	3	2	LESS THAN 30MPH	BACK OF FOOTPATH	0	POST TOP	NOT APPLICABLE	RIGID COLUMN	URBIS	AXIA 2 S1	MALLATITE	TUBULAR STEEL	6	GALVANISED	TUBULAR	
46101058	NICHOLAS COURT	Barton upon Humber Parish	502454.56	421295.95	1	7000	00191528	01/04/2008 00:00	5	2	LESS THAN 30MPH	BACK OF FOOTPATH	0	POST TOP	NOT APPLICABLE	RIGID COLUMN	URBIS	AXIA 2 S1	MALLATITE	TUBULAR STEEL	6	GALVANISED	TUBULAR	
46101061	NIGHTINGALE CLOSE	Scunthorpe	487764.91	412481.78	1	7000	00191549	01/04/1995 00:00	2	3	LESS THAN 30MPH	VERGE	0	POST TOP	NOT APPLICABLE	RIGID COLUMN	URBIS	AXIA 2 S1	PETITJEAN	SHEET STEEL	5	GALVANISED	NIDD	
46101061	NIGHTINGALE CLOSE	Scunthorpe	487789.91	412474.52	2	7001	00191550	01/04/1995 00:00	2	3	LESS THAN 30MPH	VERGE	0	POST TOP	NOT APPLICABLE	RIGID COLUMN	URBIS	AXIA 2 S1	PETITJEAN	SHEET STEEL	5	GALVANISED	NIDD	
46101061	NIGHTINGALE CLOSE	Scunthorpe	487813.56	412482.38	3	7002	00191551	01/04/1995 00:00	2	3	LESS THAN 30MPH	VERGE	0	POST TOP	NOT APPLICABLE	RIGID COLUMN	URBIS	AXIA 2 S1	PETITJEAN	SHEET STEEL	5	GALVANISED	NIDD	
46101062	NINTH AVENUE	Flixborough Parish	486332.76	414808.44	1	7000	00191552	01/04/1978 00:00	2	1	LESS THAN 30MPH	VERGE	1000	SINGLE ARM	DARK GREY	RIGID COLUMN	URBIS	AXIA 2 S1	PETITJEAN	SHEET STEEL	8	PAINTED	THAMES	
46101062	NINTH AVENUE	Flixborough Parish	486362.06	414821.08	2	7001	00191553	01/04/1978 00:00	2	1	LESS THAN 30MPH	VERGE	1000	SINGLE ARM	DARK GREY	RIGID COLUMN	URBIS	AXIA 2 S1	PETITJEAN	SHEET STEEL	8	PAINTED	THAMES	
46101062	NINTH AVENUE	Flixborough Parish	486381.42	414828.87	3	7002	00191554	01/04/1978 00:00	2	1	LESS THAN 30MPH	VERGE	1000	SINGLE ARM	DARK GREY	RIGID COLUMN	URBIS	AXIA 2 S1	PETITJEAN	SHEET STEEL	8	PAINTED	THAMES	
46101063	NOOKINGS DRIVE	Hibaldstow Parish	498360.96	402674.73	1	7000	00191555	01/04/1980 00:00	1	4	LESS THAN 30MPH	BACK OF FOOTPATH	0	POST TOP	NOT APPLICABLE	RIGID COLUMN	URBIS	AXIA 2 S1	PETITJEAN	SHEET STEEL	5	GALVANISED	NIDD	
46101063	NOOKINGS DRIVE	Hibaldstow Parish	498362.98	402636.56	2	7001	00191556	12/12/2018 00:00	1	4	LESS THAN 30MPH	BACK OF FOOTPATH	0	POST TOP	NOT APPLICABLE	RIGID COLUMN	URBIS	AXIA 2 S1	MALLATITE	TUBULAR STEEL	6	GALVANISED	TUBULAR	
46101063	NOOKINGS DRIVE	Hibaldstow Parish	498358.59	402602.01	3	7002	00191557	01/04/1980 00:00	1	4	LESS THAN 30MPH	BACK OF FOOTPATH	0	POST TOP	LIGHT GREY	RIGID COLUMN	URBIS	AXIA 2 S1	PETITJEAN	SHEET STEEL	5	PAINTED	NIDD	
46101063	NOOKINGS DRIVE	Hibaldstow Parish	498351.75	402570.72	4	7003	00191558	04/11/2019 00:00	1	4	LESS THAN 30MPH	BACK OF FOOTPATH	0	POST TOP	NOT APPLICABLE	RIGID COLUMN	URBIS	AXIA 2 S1	MALLATITE	TUBULAR STEEL	6	GALVANISED	TUBULAR	
46101063	NOOKINGS DRIVE	Hibaldstow Parish	498325.71	402556.55	6	7004	00191559	01/04/1990 00:00	1	4	LESS THAN 30MPH	OTHER	0	POST TOP	LIGHT GREY	RIGID COLUMN	URBIS	AXIA 2 S1	PETITJEAN	SH

46101082	NORTHAMPTON ROAD	Scunthorpe	490160.24	410416.4	14	7013	00191724	01/04/2013 00:00	2	4	LESS THAN 30MPH	BACK OF FOOTPATH	0	POST TOP	NOT APPLICABLE	RIGID COLUMN	URBIS	AXIA 2 S1	MALLATITE	TUBULAR STEEL	6	GALVANISED	TUBULAR
46101082	NORTHAMPTON ROAD	Scunthorpe	490168.29	410445.82	15	7014	00191725	14/08/2020 00:00	2	4	LESS THAN 30MPH	BACK OF FOOTPATH	0	POST TOP	NOT APPLICABLE	RIGID COLUMN	URBIS	AXIA 2 S1	MALLATITE	TUBULAR STEEL	6	GALVANISED	TUBULAR
46101082	NORTHAMPTON ROAD	Scunthorpe	490140.47	410435.27	16	7015	00191726	01/04/1980 00:00	2	4	LESS THAN 30MPH	BACK OF FOOTPATH	300	SINGLE ARM	NOT APPLICABLE	RIGID COLUMN	URBIS	AXIA 2 S1	MALLATITE	TUBULAR STEEL	5	GALVANISED	STEPPED TUBULAR
46101082	NORTHAMPTON ROAD	Scunthorpe	490447.03	410452.15	2	7001	00191712	14/08/2020 00:00	2	4	LESS THAN 30MPH	BACK OF FOOTPATH	0	POST TOP	NOT APPLICABLE	RIGID COLUMN	URBIS	AXIA 2 S1	MALLATITE	TUBULAR STEEL	6	GALVANISED	TUBULAR
46101082	NORTHAMPTON ROAD	Scunthorpe	490418.59	410447.05	3	7002	00191713	01/04/2013 00:00	2	4	LESS THAN 30MPH	BACK OF FOOTPATH	0	POST TOP	NOT APPLICABLE	RIGID COLUMN	URBIS	AXIA 2 S1	MALLATITE	TUBULAR STEEL	6	GALVANISED	TUBULAR
46101082	NORTHAMPTON ROAD	Scunthorpe	490394.09	410436.32	4	7003	00191714	14/08/2020 00:00	2	4	LESS THAN 30MPH	BACK OF FOOTPATH	0	POST TOP	NOT APPLICABLE	RIGID COLUMN	URBIS	AXIA 2 S1	MALLATITE	TUBULAR STEEL	6	GALVANISED	TUBULAR
46101082	NORTHAMPTON ROAD	Scunthorpe	490366.88	410429.15	5	7004	00191715	01/04/2013 00:00	2	4	LESS THAN 30MPH	BACK OF FOOTPATH	0	POST TOP	NOT APPLICABLE	RIGID COLUMN	URBIS	AXIA 2 S1	MALLATITE	TUBULAR STEEL	6	GALVANISED	TUBULAR
46101082	NORTHAMPTON ROAD	Scunthorpe	490360.87	410410.67	6	7005	00191716	01/04/2013 00:00	2	4	LESS THAN 30MPH	BACK OF FOOTPATH	0	POST TOP	NOT APPLICABLE	RIGID COLUMN	URBIS	AXIA 2 S1	MALLATITE	TUBULAR STEEL	6	GALVANISED	TUBULAR
46101082	NORTHAMPTON ROAD	Scunthorpe	490333.66	410393.46	7	7006	00191717	01/04/1980 00:00	2	4	LESS THAN 30MPH	BACK OF FOOTPATH	300	SINGLE ARM	NOT APPLICABLE	RIGID COLUMN	URBIS	AXIA 2 S1	PETITJEAN	SHEET STEEL	5	GALVANISED	DAER
46101082	NORTHAMPTON ROAD	Scunthorpe	490299.69	410386.23	8	7007	00191718	01/04/1980 00:00	2	4	LESS THAN 30MPH	BACK OF FOOTPATH	300	SINGLE ARM	NOT APPLICABLE	RIGID COLUMN	URBIS	AXIA 2 S1	PETITJEAN	SHEET STEEL	5	GALVANISED	DAER
46101082	NORTHAMPTON ROAD	Scunthorpe	490267.44	410382.61	9	7008	00191719	01/04/2013 00:00	2	4	LESS THAN 30MPH	BACK OF FOOTPATH	0	POST TOP	NOT APPLICABLE	RIGID COLUMN	URBIS	AXIA 2 S1	MALLATITE	TUBULAR STEEL	6	GALVANISED	TUBULAR
46101083	NORTHERN AVENUE	Brigg Parish	500363.02	408107.94	1	7000	00191727	01/04/1993 00:00	2	3	LESS THAN 30MPH	BACK OF FOOTPATH	800	SINGLE ARM	NOT APPLICABLE	RIGID COLUMN	URBIS	AXIA 2 S1	PETITJEAN	SHEET STEEL	6	GALVANISED	DAER
46101083	NORTHERN AVENUE	Brigg Parish	500364.75	408138.62	2	7001	00191728	01/04/1993 00:00	2	3	LESS THAN 30MPH	BACK OF FOOTPATH	800	SINGLE ARM	NOT APPLICABLE	RIGID COLUMN	URBIS	AXIA 2 S1	PETITJEAN	SHEET STEEL	6	GALVANISED	DAER
46101083	NORTHERN AVENUE	Brigg Parish	500348.3	408163.18	3	7002	00191729	01/04/1993 00:00	2	3	LESS THAN 30MPH	BACK OF FOOTPATH	800	SINGLE ARM	NOT APPLICABLE	RIGID COLUMN	URBIS	AXIA 2 S1	PETITJEAN	SHEET STEEL	6	GALVANISED	DAER
46101083	NORTHERN AVENUE	Brigg Parish	500349.95	408193.09	4	7003	00191730	01/04/1993 00:00	2	3	LESS THAN 30MPH	BACK OF FOOTPATH	800	SINGLE ARM	NOT APPLICABLE	RIGID COLUMN	URBIS	AXIA 2 S1	PETITJEAN	SHEET STEEL	6	GALVANISED	DAER
46101083	NORTHERN AVENUE	Brigg Parish	500343	408218.53	5	7004	00191731	01/04/1993 00:00	2	3	LESS THAN 30MPH	BACK OF FOOTPATH	800	SINGLE ARM	NOT APPLICABLE	RIGID COLUMN	URBIS	AXIA 2 S1	PETITJEAN	SHEET STEEL	6	GALVANISED	DAER
46101083	NORTHERN AVENUE	Brigg Parish	500336.91	408245.11	6	7005	00191732	01/04/1993 00:00	2	3	LESS THAN 30MPH	BACK OF FOOTPATH	800	SINGLE ARM	NOT APPLICABLE	RIGID COLUMN	URBIS	AXIA 2 S1	PETITJEAN	SHEET STEEL	6	GALVANISED	DAER
46101085	NORTHFIELD CLOSE	Scunthorpe	490062.87	408847.87	1	7000	00191733	01/04/1980 00:00	2	4	LESS THAN 30MPH	FRONT OF FOOTPATH	300	SINGLE ARM	NOT APPLICABLE	RIGID COLUMN	URBIS	AXIA 2 S1	PETITJEAN	SHEET STEEL	5	GALVANISED	DAER
46101085	NORTHFIELD CLOSE	Scunthorpe	490032.91	408852.97	2	7001	00191734	01/04/1980 00:00	2	4	LESS THAN 30MPH	BACK OF FOOTPATH	300	SINGLE ARM	NOT APPLICABLE	RIGID COLUMN	URBIS	AXIA 2 S1	PETITJEAN	SHEET STEEL	5	GALVANISED	DAER
46101085	NORTHFIELD CLOSE	Scunthorpe	490007.97	408841.28	3	7002	00191735	01/04/1980 00:00	2	4	LESS THAN 30MPH	BACK OF FOOTPATH	300	SINGLE ARM	NOT APPLICABLE	RIGID COLUMN	URBIS	AXIA 2 S1	PETITJEAN	SHEET STEEL	5	GALVANISED	DAER
46101086	NORTHFIELD LANE	Amcotts Parish	485760.05	414205.98	1	7000	00191736	01/04/1993 00:00	4	2	LESS THAN 30MPH	BACK OF FOOTPATH	800	SINGLE ARM	NOT APPLICABLE	RIGID COLUMN	URBIS	AXIA 2 S1	PETITJEAN	SHEET STEEL	6	GALVANISED	DAER
46101086	NORTHFIELD LANE	Amcotts Parish	485746.45	414235.26	2	7001	00191737	01/04/1993 00:00	4	2	LESS THAN 30MPH	BACK OF FOOTPATH	800	SINGLE ARM	NOT APPLICABLE	RIGID COLUMN	URBIS	AXIA 2 S1	PETITJEAN	SHEET STEEL	6	GALVANISED	DAER
46101086	NORTHFIELD LANE	Amcotts Parish	485720.1	414256.34	3	7002	00191738	15/03/2019 00:00	4	2	LESS THAN 30MPH	VERGE	0	POST TOP	NOT APPLICABLE	RIGID COLUMN	URBIS	AXIA 2 S1	MALLATITE	TUBULAR STEEL	6	GALVANISED	TUBULAR
46101088	NORTHFIELD ROAD	Messingham Parish	489287.5	404650.08	1	7000	00191739	01/04/2006 00:00	4	1	BETWEEN 30-50 MPH	BACK OF FOOTPATH	500	SINGLE ARM	NOT APPLICABLE	RIGID COLUMN	URBIS	AXIA 2 S1	VALMONT ST	SHEET STEEL	10	GALVANISED	THAMES
46101088	NORTHFIELD ROAD	Messingham Parish	489316.2	404932.88	10	7009	00191748	01/04/2006 00:00	4	1	BETWEEN 30-50 MPH	BACK OF FOOTPATH	500	SINGLE ARM	NOT APPLICABLE	RIGID COLUMN	URBIS	AXIA 2 S1	VALMONT ST	SHEET STEEL	10	GALVANISED	THAMES
46101088	NORTHFIELD ROAD	Messingham Parish	489318.16	404967.18	11	7010	00191749	01/04/2006 00:00	4	1	BETWEEN 30-50 MPH	BACK OF FOOTPATH	500	SINGLE ARM	NOT APPLICABLE	RIGID COLUMN	URBIS	AXIA 2 S1	VALMONT ST	SHEET STEEL	10	GALVANISED	THAMES
46101088	NORTHFIELD ROAD	Messingham Parish	489310.32	405003.44	12	7011	00191750	01/04/2006 00:00	4	1	BETWEEN 30-50 MPH	BACK OF FOOTPATH	500	SINGLE ARM	NOT APPLICABLE	RIGID COLUMN	URBIS	AXIA 2 S1	VALMONT ST	SHEET STEEL	10	GALVANISED	THAMES
46101088	NORTHFIELD ROAD	Messingham Parish	489307.1	405037.04	13	7012	00191751	01/04/2006 00:00	4	1	BETWEEN 30-50 MPH	BACK OF FOOTPATH	500	SINGLE ARM	NOT APPLICABLE	RIGID COLUMN	URBIS	AXIA 2 S1	VALMONT ST	SHEET STEEL	10	GALVANISED	THAMES
46101088	NORTHFIELD ROAD	Messingham Parish	489319.28	405070.5	14	7013	00191752	01/04/2006 00:00	4	1	BETWEEN 30-50 MPH	BACK OF FOOTPATH	500	SINGLE ARM	NOT APPLICABLE	RIGID COLUMN	URBIS	AXIA 2 S1	VALMONT ST	SHEET STEEL	10	GALVANISED	THAMES
46101088	NORTHFIELD ROAD	Messingham Parish	489314.38	405109.42	15	7014	00191753	01/04/2006 00:00	4	1	BETWEEN 30-50 MPH	BACK OF FOOTPATH	500	SINGLE ARM	NOT APPLICABLE	RIGID COLUMN	URBIS	AXIA 2 S1	VALMONT ST	SHEET STEEL	10	GALVANISED	THAMES
46101088	NORTHFIELD ROAD	Messingham Parish	489301.64	405141.34	16	7015	00191754	01/04/2006 00:00	4	1	BETWEEN 30-50 MPH	BACK OF FOOTPATH	500	SINGLE ARM	NOT APPLICABLE	RIGID COLUMN	URBIS	AXIA 2 S1	VALMONT ST	SHEET STEEL	10	GALVANISED	THAMES
46101088	NORTHFIELD ROAD	Messingham Parish	489295.8	405175.7	17	7016	00191755	01/04/2006 00:00	4	1	BETWEEN 30-50 MPH	BACK OF FOOTPATH	500	SINGLE ARM	NOT APPLICABLE	RIGID COLUMN	URBIS	AXIA 2 S1	VALMONT ST	SHEET STEEL	10	GALVANISED	THAMES
46101088	NORTHFIELD ROAD	Messingham Parish	489303	405308	18	7017	04200065	01/04/1980 00:00	4	1	BETWEEN 30-50 MPH	ON POLE	300	SINGLE ARM	NOT APPLICABLE	POLE MOUNTED	URBIS	AXIA 2 S1	WOODEN PO	WOOD	5	NOT APPLICABI	Not Applicable
46101088	NORTHFIELD ROAD	Messingham Parish	489298	405412	19	7018	04200066	01/04/1980 00:00	4	1	BETWEEN 30-50 MPH	ON POLE	300	SINGLE ARM	NOT APPLICABLE	POLE MOUNTED	URBIS	AXIA 2 S1	WOODEN PO	WOOD	5	NOT APPLICABI	Not Applicable
46101088	NORTHFIELD ROAD	Messingham Parish	489297.72	404680.32	2	7001	00191740	01/04/2006 00:00	4	1	BETWEEN 30-50 MPH	BACK OF FOOTPATH	500	SINGLE ARM	NOT APPLICABLE	RIGID COLUMN	URBIS	AXIA 2 S1	VALMONT ST	SHEET STEEL	10	GALVANISED	THAMES
46101088	NORTHFIELD ROAD	Messingham Parish	489282	405506	20	7019	04200067	01/04/1980 00:00	4	1	BETWEEN 30-50 MPH	ON POLE	300	SINGLE ARM	NOT APPLICABLE	POLE MOUNTED	URBIS	AXIA 2 S1	WOODEN PO	WOOD	5	NOT APPLICABI	Not Applicable
46101088	NORTHFIELD ROAD	Messingham Parish	489282.04	404707.06	3	7002	00191741	01/04/2006 00:00	4	1	BETWEEN 30-50 MPH	BACK OF FOOTPATH	500	SINGLE ARM	NOT APPLICABLE	RIGID COLUMN	URBIS	AXIA 2 S1	VALMONT ST	SHEET STEEL	10	GALVANISED	THAMES
46101088	NORTHFIELD ROAD	Messingham Parish	489265.94	404737.72	4	7003	00191742	01/04/2006 00:00	4	1	BETWEEN 30-50 MPH	BACK OF FOOTPATH	500	SINGLE ARM	NOT APPLICABLE	RIGID COLUMN	URBIS	AXIA 2 S1	VALMONT ST	SHEET STEEL	10	GALVANISED	THAMES
46101088	NORTHFIELD ROAD	Messingham Parish	489258.24	404765.72	5	7004	00191743	01/04/2006 00:00	4	1	BETWEEN 30-50 MPH	BACK OF FOOTPATH	500	SINGLE ARM	NOT APPLICABLE	RIGID COLUMN	URBIS	AXIA 2 S1	VALMONT ST	SHEET STEEL	10	GALVANISED	THAMES
46101088	NORTHFIELD ROAD	Messingham Parish	489258.24	404803.66	6	7005	00191744	01/04/2006 00:00	4	1	BETWEEN 30-50 MPH	BACK OF FOOTPATH	500	SINGLE ARM	NOT APPLICABLE	RIGID COLUMN	URBIS	AXIA 2 S1	VALMONT ST	SHEET STEEL	10	GALVANISED	THAMES
46101088	NORTHFIELD ROAD	Messingham Parish	489271.96	404839.92	7	7006	00191745	01/04/2006 00:00	4	1	BETWEEN 30-50 MPH	BACK OF FOOTPATH	500	SINGLE ARM	NOT APPLICABLE	RIGID COLUMN	URBIS	AXIA 2 S1	VALMONT ST	SHEET STEEL	10	GALVANISED	THAMES
46101088	NORTHFIELD ROAD	Messingham Parish	489294.36	404863.86	8	7007	00191746	01/04/2006 00:00	4	1	BETWEEN 30-50 MPH	BACK OF FOOTPATH	500	SINGLE ARM	NOT APPLICABLE	RIGID COLUMN	URBIS	AXIA 2 S1	VALMONT ST	SHEET STEEL	10	GALVANISED	THAMES
46101088	NORTHFIELD ROAD	Messingham Parish	489307.24	404895.92	9	7008	00191747	01/04/2006 00:00	4	1	BETWEEN 30-50 MPH	BACK OF FOOTPATH	500	SINGLE ARM	NOT APPLICABLE	RIGID COLUMN	URBIS	AXIA 2 S1	VALMONT ST	SHEET STEEL	10	GALVANISED	THAMES
46101089	NORTHLANDS AVENUE	Winterton Parish	492524.09	418781.64	1	7000	00191756	01/04/2013 00:00	1	1	LESS THAN 30MPH	VERGE	0	POST TOP	NOT APPLICABLE	RIGID COLUMN	URBIS	AXIA 2 S1	MALLATITE	TUBULAR STEEL	6	GALVANISED	TUBULAR
46101089	NORTHLANDS AVENUE	Winterton Parish	492556.08	418773.57	2	7001	00191757	06/03/2019 00:00	1	1	LESS THAN 30MPH	FRONT OF FOOTPATH	0	POST TOP	NOT APPLICABLE	RIGID COLUMN	URBIS	AXIA 2 S1	MALLATITE	TUBULAR STEEL	6	GALVANISED	TUBULAR
46101089	NORTHLANDS AVENUE	Winterton Parish	492583.31	418782.7	3	7002	00191758	01/04/2008 00:00	1	1	LESS THAN 30MPH	VERGE	0	POST TOP	NOT APPLICABLE	RIGID COLUMN	URBIS	AXIA 2 S1	BRITISH STEE	TUBULAR STEEL	6	GALVANISED	ASH
46101089	NORTHLANDS AVENUE	Winterton Parish	492610.42	418776.03	4	7003	00191759	01/04/2013 00:00	1	1	LESS THAN 30MPH	FRONT OF FOOTPATH	0	POST TOP	NOT APPLICABLE	RIGID COLUMN	URBIS	AXIA 2 S1	MALLATITE	TUBULAR STEEL	6	GALVANISED	TUBULAR
46101089	NORTHLANDS AVENUE	Winterton Parish	492645.18	418777.59	5	7004	00191760	01/04/2013 00:00	1	1	LESS THAN 30MPH	FRONT OF FOOTPATH	0	POST TOP	NOT APPLICABLE	RIGID COLUMN	URBIS	AXIA 2 S1	MALLATITE	TUBULAR STEEL	6	GALVANISED	TUBULAR
46101091	NORTHOLME CRESCENT	Scunthorpe	488587.93	411014.8	1	7000	00191761	12/02/2021 00:00	6	3	LESS THAN 30MPH	BACK OF FOOTPATH	0	POST TOP	NOT APPLICABLE	RIGID COLUMN	URBIS	AXIA 2 S1	MALLATITE	TUBULAR STEEL	6	GALVANISED	TUBULAR
46101091	NORTHOLME CRESCENT	Scunthorpe	488595.03	411049.89	2	7001	00191762	12/02/2021 00:00	6	3	LESS THAN 30MPH	BACK OF FOOTPATH	0	POST TOP	NOT APPLICABLE	RIGID COLUMN	URBIS	AXIA 2 S1	MALLATITE	TUBULAR STEEL	6	GALVANISED	TUBULAR
46101093	NORTON ROAD	Scunthorpe	489903.74	408136.91	1	7000	00191763	22/01/2020 00:00	1	3	LESS THAN 30MPH	BACK OF FOOTPATH	0	POST TOP	NOT APPLICABLE	RIGID COLUMN	URBIS	AXIA 2 S1	MALLATITE	TUBULAR STEEL	6	GALVANISED	TUBULAR
46101093	NORTON ROAD	Scunthorpe	489871.62	408143.72	2	7001	00191764	01/04/1980 00:00	1	3	LESS THAN 30MPH	BACK OF FOOTPATH	300	SINGLE ARM	NOT APPLICABLE	RIGID COLUMN	URBIS	AXIA 2 S1	MALLATITE	TUBULAR STEEL	5	GALVANISED	STEPPED TUBULAR
46101093	NORTON ROAD	Scunthorpe	489835.34	408133.7	3	7002	00191765	16/01/2020 00:00	1	3	LESS THAN 30MPH	BACK OF FOOTPATH	0	POST TOP	NOT APPLICABLE	RIGID COLUMN	URBIS	AXIA 2 S1	MALLATITE	TUBULAR STEEL	6	GALVANISED	TUBULAR
46101094	NORWOOD AVENUE	Scunthorpe	488926.8	410790.98	1	7000	00191766	01/04/2001 00:00	6	3	LESS THAN 30MPH	BACK OF FOOTPATH	300	SINGLE ARM	NOT APPLICABLE	RIGID COLUMN	URBIS	AXIA 2 S1	MALLATITE	TUBULAR STEEL	5	GALVANISED	STEPPED TUBULAR
46101094	NORWOOD AVENUE	Scunthorpe	488918.81	410765.34	2	7001	00191767	01/04/2001 00:00	6	3	LESS THAN 30MPH	BACK OF FOOTPATH	300	SINGLE ARM	NOT APPLICABLE	RIGID COLUMN	URBIS	AXIA 2 S1	MALLATITE	TUBULAR STEEL	5	GALVANISED	STEPPED TUBULAR
46101094	NORWOOD AVENUE	Scunthorpe	488928.59	410742.01	3	7002	00191768	01/04/2001 00:00	6	3	LESS THAN 30MPH	BACK OF FOOTPATH	300	SINGLE ARM	NOT APPLICABLE	RIGID COLUMN	URBIS	AXIA 2 S1	MALLATITE	TUBULAR STEEL	5	GALVANISED	STEPPED TUBULAR
46101094	NORWOOD AVENUE	Scunthorpe	488921.18	410718.31	4	7003	00191769	01/04/2001 00:00	6	3	LESS THAN 30MPH	BACK OF FOOTPATH	300	SINGLE ARM	NOT APPLICABLE	RIGID COLUMN	URBIS	AXIA 2 S1	MALLATITE	TUBULAR STEEL	5	GALVANISED	STEPPED TUBULAR
46101094	NORWOOD AVENUE	Scunthorpe	488926.08	410695.41	5	7004	00191770	01/04/2001 00:00	6	3	LESS THAN 30MPH	BACK OF FOOTPATH	300	SINGLE ARM	NOT APPLICABLE	RIGID COLUMN	URBIS	AXIA 2 S1	MALLATITE	TUBULAR STEEL	5	GALVANISED	STEPPED TUBULAR
46101095	NOSTELL ROAD	Scunthorpe	490963.08	410267.07	1	7000	00191771	01/04/1981 00:00	2	4	LESS THAN 30MPH	VERGE	2000	SINGLE ARM	LIGHT GREY	RIGID COLUMN	URBIS	AXIA 2 S1	PETITJEAN	SHEET STEEL	8	PAINTED	THAMES
46101095	NOSTELL ROAD	Scunthorpe	490928.46	410264.62	2	7001	00191772	01/04/1981 00:00	2	4	LESS THAN 30MPH	VERGE	2000	SINGLE ARM	LIGHT GREY	RIGID COLUMN	URBIS	AXIA 2 S1	PETITJEAN	SHEET STEEL	8	PAINTED	THAMES
46101095	NOSTELL ROAD	Scunthorpe	490902.81	410249.05	3	7002	00191773	01/04/1981 00:00	2	4	LESS THAN 30MPH	VERGE	2000	SINGLE ARM	LIGHT GREY	RIGID COLUMN	URBIS	AXIA 2 S1	PETITJEAN	SHEET STEEL	8	PAINTED	THAMES
46101095	NOSTELL ROAD	Scunthorpe	490876.36	410228.58	4	7003	00191774	01/04/1981 00:00	2	4	LESS THAN 30MPH	VERGE	2000	SINGLE ARM	LIGHT GREY	RIGID COLUMN	URBIS	AXIA 2 S1	PETITJEAN	SHEET STEEL	8	PAINTED	THAMES
46101096	NUNS ROAD	Scunthorpe	488998.03	408840.41	1	7000	00191775	01/04/1985 00:00	5	2	LESS THAN 30MPH	BACK OF FOOTPATH	300	SINGLE ARM	NOT APPLICABLE	RIGID COLUMN	URBIS	AXIA 2 S1	PETITJEAN	SHEET STEEL	6	GALVANISED	DAER
46101096	NUNS ROAD	Scunthorpe	488988.37	408815.66	2	7001	00191776	01/04/1985 00:00	5	2	LESS THAN 30MPH	BACK OF FOOTPATH	300	SINGLE ARM	NOT APPLICABLE	RIGID COLUMN	URBIS	AXIA 2 S1	PETITJEAN	SHEET STEEL	6	GALVANISED	DAER
46101096	NUNS ROAD	Scunthorpe	488999.51	408790.67	3	7002	00191777	01/04/1985 00:00	5	2	LESS THAN 30MPH	BACK OF FOOTPATH	300	SINGLE ARM	NOT APPLICABLE	RIGID COLUMN	URBIS	AXIA 2 S1	PETITJEAN	SHEET STEEL	6	GALVANISED	DAER
46101096	NUNS ROAD	Scunthorpe	489989.39	408766.26	4	7003	00191778	01/04/1985 00:00	5	2	LESS THAN 30MPH	BACK OF FOOTPATH	300	SINGLE ARM	NOT APPLICABLE	RIGID COLUMN	URBIS	AXIA 2 S1	PETITJEAN	SHEET STEEL	6	GALVANISED	DAER
46101096	NUNS ROAD	Scunthorpe	489000.53	408743.98	5	7004	00191779	01/04/1985 00:00	5	2	LESS THAN 30MPH	BACK OF FOOTPATH	300	SINGLE ARM	NOT APPLICABLE	RIGID COLUMN	URBIS	AXIA 2 S1	PETITJEAN	SHEET STEEL	6	GALVANISED	DAER
46101096	NUNS ROAD	Scunthorpe	488997.45	408721.73	6	7005	00191780	01/04/1985 00:00	5	2	LESS THAN 30MPH	BACK OF FOOTPATH	300	SINGLE ARM	NOT APPLICABLE	RIGID COLUMN	URBIS	AXIA 2 S1	PETITJEAN	SHEET STEEL	6	GALVANISED	DAER
46101097	NURSERY CLOSE	Barton upon Humber Parish	503579.57	422462.17	1	7000	00191781	01/04/1980 00:00	5	2	LESS THAN 30MPH	BACK OF FOOTPATH	0	POST TOP	MID GREY	RIGID COLUMN	URBIS	AXIA 2 S1	PETITJEAN	SHEET STEEL	5	PAINTED	NIDD
46101097	NURSERY CLOSE	Barton upon Humber Parish	503615.58	422444.38	2	7001	00191782	01/04/1980 00:00	5	2	LESS THAN 30MPH	BACK OF FOOTPATH	0	POST TOP	MID GREY	RIGID COLUMN	URBIS	AXIA 2 S1	PETITJEAN	SHEET STEEL	5	PAINTED	NIDD
46101097	NURSERY CLOSE	Barton upon Humber Parish	503647.23	422441.07	3	7002	00191783	01/04/1980 00:00	5	2	LESS THAN 30MPH	BACK OF FOOTPATH	0	POST TOP	MID GREY	RIGID COLUMN	URBIS	AXIA 2 S1	PETITJEAN	SHEET STEEL	5	PAINTED	NIDD
46101097	NURSERY CLOSE	Barton upon Humber Parish	503671.61	422443.95	4	7003	00191784	01/04/1980 00:00	5	2	LESS THAN 30MPH	BACK OF FOOTPATH	0	POST TOP	MID GREY	RIGID COLUMN	URBIS	AXIA 2 S1	PETITJEAN	SHEET STEEL	5	PAINTED	NIDD
46101097	NURSERY CLOSE	Barton upon Humber Parish	503692.36	422467.44	5	7004	00191785	01/04/1980 00:00	5	2	LESS THAN 30MPH	BACK OF FOOTPATH	0	POST TOP	MID GREY	RIGID COLUMN	URBIS	AXIA 2 S1	PETITJEAN	SHEET STEEL	5	PAINTED	NIDD
46101097	NURSERY CLOSE	Barton upon Humber Parish	503693.41	422494.96	6	7005	00191786	01/04/1980 00:00	5	2	LESS THAN 30MPH	BACK OF FOOTPATH	0	POST TOP	MID GREY	RIGID COLUMN	URBIS	AXIA 2 S1	PETITJEAN	SHEET STEEL	5	PAINTED	NIDD
46101097	NURSERY CLOSE	Barton upon Humber Parish	503668.72	422497.08	7	7006	00191787	01/04/2005 00:00	5	2	LESS THAN 30MPH	VERGE	0	POST TOP	NOT APPLICABLE	RIGID COLUMN	URBIS	AXIA 2 S1	MALLATITE	TUBULAR STEEL	6	GALVANISED	STEPPED TUBULAR
46101097	NURSERY CLOSE	Barton upon Humber Parish	503636.15	422511.95	8	7007	00191788	01/04/2005 00:00	5	2	LESS THAN 30MPH	VERGE	0	POST TOP	NOT APPLICABLE	RIGID COLUMN	URBIS	AXIA 2 S1	MALLATITE	TUBULAR STEEL	6	GALVANISED	STEPPED TUBULAR
46101098	NURSERY CLOSE	Bottesford Parish	488954.93	407073.1	1	7000	00191789	01/04/2001 00:00	3	1	LESS THAN 30MPH	VERGE	0	POST TOP	NOT APPLICABLE	RIGID COLUMN	URBIS	AXIA 2 S1	MALLATITE	TUBULAR STEEL	5	GALVANISED	STEPPED TUBULAR
46101098	NURSERY CLOSE	Bottesford Parish	488917.98	407221.71	10	7009	00191798	01/04/2001 00:00	3	1	LESS THAN 30MPH	VERGE	0	POST TOP	NOT APPLICABLE	RIGID COLUMN	URBIS	AXIA 2 S1	MALLATITE	TUBULAR STEEL	5	GALVANISED	STEPPED TUBULAR
46101098	NURSERY CLOSE	Bottesford Parish	488916.64	407235.42	11	7010	00191799	01/04/2001 00:00	3	1	LESS THAN 30MPH	VERGE	0	POST TOP	NOT APPLICABLE	RIGID COLUMN	URBIS	AXIA 2 S1	MALLATITE	TUBULAR STEEL	5	GALVANISED	STEPPED TUBULAR
46101098	NURSERY CLOSE	Bottesford Parish	488961.65	407097.57	2	7001	00191790	01/04/2001 00:00	3	1	LESS THAN 30MPH	VERGE	0	POST TOP	NOT APPLICABLE	RIGID COLUMN	URBIS	AXIA 2 S1	MALLATITE	TUBULAR STEEL	5	GALVANISED	STEPPED TUBULAR
46101098	NURSERY CLOSE	Bottesford Parish	488954.23	407134	3	7002	00191791	01/04/2001 00:00	3	1	LESS THAN 30MPH	VERGE	0	POST TOP	NOT APPLICABLE	RIGID COLUMN	URBIS	AXIA 2 S1	MALLATITE	TUBULAR STEEL	5	GALVANISED	STEPPED TUBULAR
46101098	NURSERY CLOSE	Bottesford Parish	488940.25	407153.9	4	7003	00191792	01/04/2001 00:00	3	1	LESS THAN 30MPH	VERGE	0	POST TOP	NOT APPLICABLE	RIGID COLUMN	URBIS	AXIA 2 S1	MALLATITE	TUBULAR STEEL	5	GALVANISED	STEPPED TUBULAR
46101098	NURSERY CLOSE	Bottesford Parish	488919.83	407170.25	5	7004	00191793	01/04/2001 00:00	3	1	LESS THAN 30MPH	VERGE	0	POST TOP	NOT APPLICABLE	RIGID COLUMN	URBIS	AXIA 2 S1	MALLATITE	TUBULAR STEEL	5	GALVANISED	STEPPED TUBULAR
46101098	NURSERY CLOSE	Bottesford Parish	488903.26	407193.56	6	7005	00191794	01/04/2001 00:00	3	1	LESS THAN 30MPH	VERGE	0	POST TOP	NOT APPLICABLE	RIGID COLUMN	URBIS	AXIA 2 S1	MALLATITE	TUBULAR STEEL	5	GALVANISED	STEPPED TUBULAR
46101098	NURSERY CLOSE	Bottesford Parish	488898.52	407158.05	7	7006	00191795	01/04/2001 00:00	3	1	LESS THAN 30MPH	VERGE	0	POST TOP	NOT APPLICABLE	RIGID COLUMN	URBIS	AXIA 2 S1	MALLATITE	TUBULAR STEEL	5	GALVANISED	STEPPED TUBULAR
46101098	NURSERY CLOSE	Bottesford Parish	488915.54	407195.07	8	7007	00191796	01/04/2001 00:00	3	1	LESS THAN 30MPH	VERGE	0	POST TOP	NOT APPLICABLE	RIGID COLUMN	URBIS	AXIA 2 S

46101135	OXMARSH LANE	New Holland Parish	508505.8	423870.5	5	7004	00191971	01/04/1973 00:00	4	1	LESS THAN 30MPH	BACK OF FOOTPATH	500	SINGLE ARM	NOT APPLICABLE	POLE MOUNTED	URBIS	AXIA 2 S1	WOODEN PO	WOOD	5	NOT APPLICABI	Not Applicable
46101135	OXMARSH LANE	New Holland Parish	508550.11	423880.87	6	7005	00191972	01/04/1973 00:00	4	1	LESS THAN 30MPH	BACK OF FOOTPATH	500	SINGLE ARM	NOT APPLICABLE	POLE MOUNTED	URBIS	AXIA 2 S1	WOODEN PO	WOOD	5	NOT APPLICABI	Not Applicable
46101135	OXMARSH LANE	New Holland Parish	508582.86	423886.57	7	7006	00191973	01/04/1973 00:00	4	1	GREATER THAN 50MPH	VERGE	500	SINGLE ARM	NOT APPLICABLE	POLE MOUNTED	URBIS	AXIA 2 S1	WOODEN PO	WOOD	5	NOT APPLICABI	Not Applicable
46101135	OXMARSH LANE	New Holland Parish	508627.9	423895.32	8	7007	00191974	01/04/1980 00:00	4	1	GREATER THAN 50MPH	VERGE	500	SINGLE ARM	NOT APPLICABLE	POLE MOUNTED	URBIS	AXIA 2 S1	WOODEN PO	WOOD	5	NOT APPLICABI	Not Applicable
46101135	OXMARSH LANE	New Holland Parish	508666.52	423904.15	9	7008	00191975	01/04/1973 00:00	4	1	GREATER THAN 50MPH	BACK OF FOOTPATH	500	SINGLE ARM	NOT APPLICABLE	POLE MOUNTED	URBIS	AXIA 2 S1	WOODEN PO	WOOD	5	NOT APPLICABI	Not Applicable
46101137	PADEMOOR TERRACE	Eastoft Parish	480521.02	416090.79	1	7000	00191976	01/04/2004 00:00	4	3	LESS THAN 30MPH	BACK OF FOOTPATH	0	POST TOP	NOT APPLICABLE	RIGID COLUMN	URBIS	AXIA 2 S1	MALLATITE	TUBULAR STEEL	5	GALVANISED	STEPPED TUBULAR
46101137	PADEMOOR TERRACE	Eastoft Parish	480524.78	416058.79	2	7002	00191978	01/04/2004 00:00	4	3	NOT ON A ROAD	BACK OF FOOTPATH	0	POST TOP	NOT APPLICABLE	RIGID COLUMN	URBIS	AXIA 2 S1	FABRIKAT	TUBULAR STEEL	5	GALVANISED	OTHER
46101137	PADEMOOR TERRACE	Eastoft Parish	480507.58	416033.52	3	7001	00191977	11/01/2017 00:00	4	3	NOT ON A ROAD	BACK OF FOOTPATH	0	POST TOP	NOT APPLICABLE	RIGID COLUMN	URBIS	AXIA 2 S1	VALMONT ST	SHEET STEEL	6	GALVANISED	LEVEN
46101138	PALMER LANE	Barrow upon Humber Parish	507453.69	421355.04	1	7000	00191979	01/04/1983 00:00	4	1	LESS THAN 30MPH	BACK OF FOOTPATH	0	POST TOP	NOT APPLICABLE	RIGID COLUMN	URBIS	AXIA 2 S1	PETITJEAN	TUBULAR STEEL	5	GALVANISED	METRO
46101138	PALMER LANE	Barrow upon Humber Parish	507274.48	421184.46	10	7009	00191988	01/04/1984 00:00	4	1	LESS THAN 30MPH	BACK OF FOOTPATH	0	POST TOP	NOT APPLICABLE	RIGID COLUMN	URBIS	AXIA 2 S1	PETITJEAN	TUBULAR STEEL	5	GALVANISED	STEPPED TUBULAR
46101138	PALMER LANE	Barrow upon Humber Parish	507265.72	421166.33	11	7010	00191989	01/04/1984 00:00	4	1	LESS THAN 30MPH	BACK OF FOOTPATH	0	POST TOP	NOT APPLICABLE	RIGID COLUMN	URBIS	AXIA 2 S1	PETITJEAN	TUBULAR STEEL	5	GALVANISED	STEPPED TUBULAR
46101138	PALMER LANE	Barrow upon Humber Parish	507274.78	421146.7	12	7011	00191990	01/04/1984 00:00	4	1	LESS THAN 30MPH	BACK OF FOOTPATH	0	POST TOP	NOT APPLICABLE	RIGID COLUMN	URBIS	AXIA 2 S1	PETITJEAN	TUBULAR STEEL	5	GALVANISED	STEPPED TUBULAR
46101138	PALMER LANE	Barrow upon Humber Parish	507287.97	421124.5	13	7012	00191991	01/04/1984 00:00	4	1	LESS THAN 30MPH	BACK OF FOOTPATH	0	POST TOP	NOT APPLICABLE	RIGID COLUMN	URBIS	AXIA 2 S1	PETITJEAN	TUBULAR STEEL	5	GALVANISED	STEPPED TUBULAR
46101138	PALMER LANE	Barrow upon Humber Parish	507280.11	421095.94	14	7013	00191992	17/04/2018 00:00	4	1	LESS THAN 30MPH	ON POLE	300	SINGLE ARM	NOT APPLICABLE	POLE MOUNTED	URBIS	AXIA 2 S1	WOODEN PO	WOOD	5	NOT APPLICABI	PUDSEY DIAMOND
46101138	PALMER LANE	Barrow upon Humber Parish	507249.9	421069.97	15	7014	00191993	17/04/2018 00:00	4	1	LESS THAN 30MPH	ON POLE	300	SINGLE ARM	NOT APPLICABLE	POLE MOUNTED	URBIS	AXIA 2 S1	WOODEN PO	WOOD	5	NOT APPLICABI	PUDSEY DIAMOND
46101138	PALMER LANE	Barrow upon Humber Parish	507213.94	421041.39	16	7015	00191994	17/04/2018 00:00	4	1	LESS THAN 30MPH	ON POLE	300	SINGLE ARM	NOT APPLICABLE	POLE MOUNTED	URBIS	AXIA 2 S1	WOODEN PO	WOOD	5	NOT APPLICABI	PUDSEY DIAMOND
46101138	PALMER LANE	Barrow upon Humber Parish	507437.87	421332.9	2	7001	00191980	01/04/1983 00:00	4	1	LESS THAN 30MPH	BACK OF FOOTPATH	0	POST TOP	NOT APPLICABLE	RIGID COLUMN	URBIS	AXIA 2 S1	PETITJEAN	TUBULAR STEEL	5	GALVANISED	METRO
46101138	PALMER LANE	Barrow upon Humber Parish	507424.88	421307.83	3	7002	00191981	01/04/1983 00:00	4	1	LESS THAN 30MPH	BACK OF FOOTPATH	0	POST TOP	NOT APPLICABLE	RIGID COLUMN	URBIS	AXIA 2 S1	PETITJEAN	TUBULAR STEEL	5	GALVANISED	METRO
46101138	PALMER LANE	Barrow upon Humber Parish	507412.29	421282.54	4	7003	00191982	01/04/1983 00:00	4	1	LESS THAN 30MPH	BACK OF FOOTPATH	0	POST TOP	NOT APPLICABLE	RIGID COLUMN	URBIS	AXIA 2 S1	PETITJEAN	TUBULAR STEEL	5	GALVANISED	METRO
46101138	PALMER LANE	Barrow upon Humber Parish	507396.59	421258.97	5	7004	00191983	01/04/1983 00:00	4	1	LESS THAN 30MPH	BACK OF FOOTPATH	0	POST TOP	NOT APPLICABLE	RIGID COLUMN	URBIS	AXIA 2 S1	PETITJEAN	TUBULAR STEEL	5	GALVANISED	METRO
46101138	PALMER LANE	Barrow upon Humber Parish	507370.65	421241.22	6	7005	00191984	01/04/1983 00:00	4	1	LESS THAN 30MPH	BACK OF FOOTPATH	0	POST TOP	NOT APPLICABLE	RIGID COLUMN	URBIS	AXIA 2 S1	PETITJEAN	TUBULAR STEEL	5	GALVANISED	METRO
46101138	PALMER LANE	Barrow upon Humber Parish	507344.67	421225.31	7	7006	00191985	01/04/1983 00:00	4	1	LESS THAN 30MPH	BACK OF FOOTPATH	0	POST TOP	NOT APPLICABLE	RIGID COLUMN	URBIS	AXIA 2 S1	PETITJEAN	TUBULAR STEEL	5	GALVANISED	METRO
46101138	PALMER LANE	Barrow upon Humber Parish	507316.47	421221.32	8	7007	00191986	01/04/1984 00:00	4	1	LESS THAN 30MPH	BACK OF FOOTPATH	0	POST TOP	NOT APPLICABLE	RIGID COLUMN	URBIS	AXIA 2 S1	PETITJEAN	TUBULAR STEEL	5	GALVANISED	STEPPED TUBULAR
46101138	PALMER LANE	Barrow upon Humber Parish	507293.51	421207.12	9	7008	00191987	01/04/1984 00:00	4	1	LESS THAN 30MPH	BACK OF FOOTPATH	0	POST TOP	NOT APPLICABLE	RIGID COLUMN	URBIS	AXIA 2 S1	PETITJEAN	TUBULAR STEEL	5	GALVANISED	STEPPED TUBULAR
46101139	PARADISE PLACE	Brigg Parish	499988.14	407080.29	1	7000	00191995	01/04/2008 00:00	2	3	LESS THAN 30MPH	BACK OF FOOTPATH	0	POST TOP	NOT APPLICABLE	RIGID COLUMN	URBIS	AXIA 2 S1	BRITISH STEI	TUBULAR STEEL	6	GALVANISED	ASH
46101139	PARADISE PLACE	Brigg Parish	499952.24	407085.77	2	7001	00191996	01/04/2008 00:00	2	3	LESS THAN 30MPH	VERGE	0	POST TOP	NOT APPLICABLE	RIGID COLUMN	URBIS	AXIA 2 S1	BRITISH STEI	TUBULAR STEEL	6	GALVANISED	ASH
46101140	PARK AVENUE	Barton upon Humber Parish	502901.62	421544.13	1	7000	00191997	05/08/2019 00:00	5	2	LESS THAN 30MPH	BACK OF FOOTPATH	0	POST TOP	NOT APPLICABLE	RIGID COLUMN	URBIS	AXIA 2 S1	MALLATITE	TUBULAR STEEL	6	GALVANISED	TUBULAR
46101140	PARK AVENUE	Barton upon Humber Parish	502932.37	421553.12	2	7001	00191998	05/08/2019 00:00	5	2	LESS THAN 30MPH	BACK OF FOOTPATH	0	POST TOP	NOT APPLICABLE	RIGID COLUMN	URBIS	AXIA 2 S1	MALLATITE	TUBULAR STEEL	6	GALVANISED	TUBULAR
46101140	PARK AVENUE	Barton upon Humber Parish	502957.9	421542.97	3	7002	00191999	05/08/2019 00:00	5	2	LESS THAN 30MPH	BACK OF FOOTPATH	0	POST TOP	NOT APPLICABLE	RIGID COLUMN	URBIS	AXIA 2 S1	MALLATITE	TUBULAR STEEL	6	GALVANISED	TUBULAR
46101140	PARK AVENUE	Barton upon Humber Parish	502997.32	421563.86	4	7003	00192000	05/08/2019 00:00	5	2	LESS THAN 30MPH	BACK OF FOOTPATH	0	POST TOP	NOT APPLICABLE	RIGID COLUMN	URBIS	AXIA 2 S1	MALLATITE	TUBULAR STEEL	6	GALVANISED	TUBULAR
46101140	PARK AVENUE	Barton upon Humber Parish	503036.32	421560.2	5	7004	00192001	05/08/2019 00:00	5	2	LESS THAN 30MPH	BACK OF FOOTPATH	0	POST TOP	NOT APPLICABLE	RIGID COLUMN	URBIS	AXIA 2 S1	MALLATITE	TUBULAR STEEL	6	GALVANISED	TUBULAR
46101141	PARK AVENUE	Bottesford Parish	488869.11	407526.14	1	7000	00192002	01/04/1997 00:00	3	1	LESS THAN 30MPH	VERGE	800	SINGLE ARM	NOT APPLICABLE	RIGID COLUMN	URBIS	AXIA 2 S1	PETITJEAN	SHEET STEEL	6	GALVANISED	DAER
46101141	PARK AVENUE	Bottesford Parish	488615.53	407473.96	10	7009	00192011	01/04/1997 00:00	3	1	LESS THAN 30MPH	VERGE	800	SINGLE ARM	NOT APPLICABLE	RIGID COLUMN	URBIS	AXIA 2 S1	PETITJEAN	SHEET STEEL	6	GALVANISED	DAER
46101141	PARK AVENUE	Bottesford Parish	488595.1	407464.37	11	7010	00192012	01/04/1997 00:00	3	1	LESS THAN 30MPH	VERGE	800	SINGLE ARM	NOT APPLICABLE	RIGID COLUMN	URBIS	AXIA 2 S1	PETITJEAN	SHEET STEEL	6	GALVANISED	DAER
46101141	PARK AVENUE	Bottesford Parish	488845.45	407520.77	2	7001	00192003	01/04/1997 00:00	3	1	LESS THAN 30MPH	BACK OF FOOTPATH	800	SINGLE ARM	NOT APPLICABLE	RIGID COLUMN	URBIS	AXIA 2 S1	PETITJEAN	SHEET STEEL	6	GALVANISED	DAER
46101141	PARK AVENUE	Bottesford Parish	488825.29	407525.61	3	7002	00192004	01/04/1997 00:00	3	1	LESS THAN 30MPH	BACK OF FOOTPATH	800	SINGLE ARM	NOT APPLICABLE	RIGID COLUMN	URBIS	AXIA 2 S1	PETITJEAN	SHEET STEEL	6	GALVANISED	DAER
46101141	PARK AVENUE	Bottesford Parish	488799.79	407511.98	4	7003	00192005	01/04/1997 00:00	3	1	LESS THAN 30MPH	VERGE	800	SINGLE ARM	NOT APPLICABLE	RIGID COLUMN	URBIS	AXIA 2 S1	PETITJEAN	SHEET STEEL	6	GALVANISED	DAER
46101141	PARK AVENUE	Bottesford Parish	488764.94	407511.53	5	7004	00192006	01/04/1997 00:00	3	1	LESS THAN 30MPH	VERGE	800	SINGLE ARM	NOT APPLICABLE	RIGID COLUMN	URBIS	AXIA 2 S1	PETITJEAN	SHEET STEEL	6	GALVANISED	DAER
46101141	PARK AVENUE	Bottesford Parish	488742.46	407500.36	6	7005	00192007	01/04/1997 00:00	3	1	LESS THAN 30MPH	VERGE	800	SINGLE ARM	NOT APPLICABLE	RIGID COLUMN	URBIS	AXIA 2 S1	PETITJEAN	SHEET STEEL	6	GALVANISED	DAER
46101141	PARK AVENUE	Bottesford Parish	488703.75	407498.21	7	7006	00192008	01/04/1997 00:00	3	1	LESS THAN 30MPH	VERGE	800	SINGLE ARM	NOT APPLICABLE	RIGID COLUMN	URBIS	AXIA 2 S1	PETITJEAN	SHEET STEEL	6	GALVANISED	DAER
46101141	PARK AVENUE	Bottesford Parish	488674.93	407485.47	8	7007	00192009	01/04/1997 00:00	3	1	LESS THAN 30MPH	VERGE	800	SINGLE ARM	NOT APPLICABLE	RIGID COLUMN	URBIS	AXIA 2 S1	PETITJEAN	SHEET STEEL	6	GALVANISED	DAER
46101141	PARK AVENUE	Bottesford Parish	488647.94	407478.6	9	7008	00192010	01/04/1997 00:00	3	1	LESS THAN 30MPH	VERGE	800	SINGLE ARM	NOT APPLICABLE	RIGID COLUMN	URBIS	AXIA 2 S1	PETITJEAN	SHEET STEEL	6	GALVANISED	DAER
46101142	PARK HILL	Kirton in Lindsey Parish	493888.26	398308.32	1	7000	00192013	01/04/1980 00:00	1	3	LESS THAN 30MPH	BACK OF FOOTPATH	0	POST TOP	LIGHT GREY	RIGID COLUMN	URBIS	AXIA 2 S1	PETITJEAN	SHEET STEEL	5	PAINTED	NIDD
46101142	PARK HILL	Kirton in Lindsey Parish	493861.63	398297.88	2	7001	00192014	01/04/1980 00:00	1	3	LESS THAN 30MPH	BACK OF FOOTPATH	0	POST TOP	LIGHT GREY	RIGID COLUMN	URBIS	AXIA 2 S1	PETITJEAN	SHEET STEEL	5	PAINTED	NIDD
46101142	PARK HILL	Kirton in Lindsey Parish	493877.66	398287.13	3	7002	00192015	01/04/1980 00:00	1	3	LESS THAN 30MPH	BACK OF FOOTPATH	0	POST TOP	LIGHT GREY	RIGID COLUMN	URBIS	AXIA 2 S1	PETITJEAN	SHEET STEEL	5	PAINTED	NIDD
46101142	PARK HILL	Kirton in Lindsey Parish	493889.47	398270.93	4	7003	00192016	01/04/1980 00:00	1	3	LESS THAN 30MPH	BACK OF FOOTPATH	0	POST TOP	LIGHT GREY	RIGID COLUMN	URBIS	AXIA 2 S1	PETITJEAN	SHEET STEEL	5	PAINTED	NIDD
46101142	PARK HILL	Kirton in Lindsey Parish	493900.23	398247.53	5	7004	00192017	01/04/1980 00:00	1	3	LESS THAN 30MPH	BACK OF FOOTPATH	0	POST TOP	LIGHT GREY	RIGID COLUMN	URBIS	AXIA 2 S1	PETITJEAN	SHEET STEEL	5	PAINTED	NIDD
46101142	PARK HILL	Kirton in Lindsey Parish	493828.58	398280.57	6	7005	00192018	01/04/1980 00:00	1	3	LESS THAN 30MPH	BACK OF FOOTPATH	0	POST TOP	LIGHT GREY	RIGID COLUMN	URBIS	AXIA 2 S1	PETITJEAN	SHEET STEEL	5	PAINTED	NIDD
46101142	PARK HILL	Kirton in Lindsey Parish	493804.92	398281.29	7	7006	00192019	01/04/1980 00:00	1	3	LESS THAN 30MPH	BACK OF FOOTPATH	0	POST TOP	LIGHT GREY	RIGID COLUMN	URBIS	AXIA 2 S1	PETITJEAN	SHEET STEEL	5	PAINTED	NIDD
46101142	PARK HILL	Kirton in Lindsey Parish	493821.63	398248.54	8	7007	00192020	01/04/1980 00:00	1	3	LESS THAN 30MPH	BACK OF FOOTPATH	0	POST TOP	LIGHT GREY	RIGID COLUMN	URBIS	AXIA 2 S1	PETITJEAN	SHEET STEEL	5	PAINTED	NIDD
46101142	PARK HILL	Kirton in Lindsey Parish	493839.2	398226.84	9	7008	00192021	01/04/1980 00:00	1	3	LESS THAN 30MPH	BACK OF FOOTPATH	0	POST TOP	LIGHT GREY	RIGID COLUMN	URBIS	AXIA 2 S1	PETITJEAN	SHEET STEEL	5	PAINTED	NIDD
46101143	PARK LANE	Haxey Parish	474387.66	399662.91	1	7000	00192022	13/04/2019 00:00	6	2	LESS THAN 30MPH	BACK OF FOOTPATH	0	POST TOP	NOT APPLICABLE	RIGID COLUMN	URBIS	AXIA 2 S1	MALLATITE	TUBULAR STEEL	6	GALVANISED	TUBULAR
46101143	PARK LANE	Haxey Parish	474685.28	399947.29	10	7009	00192031	01/04/1980 00:00	6	2	LESS THAN 30MPH	BACK OF FOOTPATH	300	SINGLE ARM	NOT APPLICABLE	RIGID COLUMN	URBIS	AXIA 2 S1	PETITJEAN	SHEET STEEL	5	GALVANISED	DAER
46101143	PARK LANE	Haxey Parish	474420.74	399694.76	2	7001	00192023	13/04/2019 00:00	6	2	LESS THAN 30MPH	BACK OF FOOTPATH	0	POST TOP	NOT APPLICABLE	RIGID COLUMN	URBIS	AXIA 2 S1	MALLATITE	TUBULAR STEEL	6	GALVANISED	TUBULAR
46101143	PARK LANE	Haxey Parish	474451.28	399723.47	3	7002	00192024	13/04/2019 00:00	6	2	LESS THAN 30MPH	BACK OF FOOTPATH	0	POST TOP	NOT APPLICABLE	RIGID COLUMN	URBIS	AXIA 2 S1	MALLATITE	TUBULAR STEEL	6	GALVANISED	TUBULAR
46101143	PARK LANE	Haxey Parish	474482.24	399753.48	4	7003	00192025	13/04/2019 00:00	6	2	LESS THAN 30MPH	BACK OF FOOTPATH	0	POST TOP	NOT APPLICABLE	RIGID COLUMN	URBIS	AXIA 2 S1	MALLATITE	TUBULAR STEEL	6	GALVANISED	TUBULAR
46101143	PARK LANE	Haxey Parish	474518.29	399788.37	5	7004	00192026	13/04/2019 00:00	6	2	LESS THAN 30MPH	BACK OF FOOTPATH	0	POST TOP	NOT APPLICABLE	RIGID COLUMN	URBIS	AXIA 2 S1	MALLATITE	TUBULAR STEEL	6	GALVANISED	TUBULAR
46101143	PARK LANE	Haxey Parish	474552.73	399820.22	6	7005	00192027	13/04/2019 00:00	6	2	LESS THAN 30MPH	BACK OF FOOTPATH	0	POST TOP	NOT APPLICABLE	RIGID COLUMN	URBIS	AXIA 2 S1	MALLATITE	TUBULAR STEEL	6	GALVANISED	TUBULAR
46101143	PARK LANE	Haxey Parish	474583.65	399848.89	7	7006	00192028	13/04/2019 00:00	6	2	LESS THAN 30MPH	BACK OF FOOTPATH	0	POST TOP	NOT APPLICABLE	RIGID COLUMN	URBIS	AXIA 2 S1	MALLATITE	TUBULAR STEEL	6	GALVANISED	TUBULAR
46101143	PARK LANE	Haxey Parish	474623.3	399888.04	8	7007	00192029	13/12/2017 00:00	6	2	LESS THAN 30MPH	BACK OF FOOTPATH	0	POST TOP	NOT APPLICABLE	RIGID COLUMN	URBIS	AXIA 2 S1	VALMONT ST	TUBULAR STEEL	6	GALVANISED	TUBULAR
46101143	PARK LANE	Haxey Parish	474649.31	399912.24	9	7008	00192030	01/04/1985 00:00	6	2	LESS THAN 30MPH	BACK OF FOOTPATH	300	SINGLE ARM	NOT APPLICABLE	RIGID COLUMN	URBIS	AXIA 2 S1	PETITJEAN	SHEET STEEL	5	GALVANISED	DAER
46101144	PARK LANE	Saxby All Saints Parish	499145.58	416464.15	1	7000	00192032	01/04/1995 00:00	6	2	LESS THAN 30MPH	VERGE	0	POST TOP	NOT APPLICABLE	RIGID COLUMN	URBIS	AXIA 2 S1	PETITJEAN	SHEET STEEL	5	GALVANISED	NIDD
46101144	PARK LANE	Saxby All Saints Parish	499119.44	416452.9	2	7001	00192033	01/04/1995 00:00	6	2	LESS THAN 30MPH	VERGE	0	POST TOP	NOT APPLICABLE	RIGID COLUMN	URBIS	AXIA 2 S1	PETITJEAN	SHEET STEEL	5	GALVANISED	NIDD
46101144	PARK LANE	Saxby All Saints Parish	499087.28	416434.96	3	7002	00192034	01/04/1995 00:00	6	2	LESS THAN 30MPH	VERGE	0	POST TOP	NOT APPLICABLE	RIGID COLUMN	URBIS	AXIA 2 S1	PETITJEAN	SHEET STEEL	5	GALVANISED	NIDD
46101144	PARK LANE	Saxby All Saints Parish	499055.64	416415.08	4	7003	00192035	01/04/1995 00:00	6	2	LESS THAN 30MPH	VERGE	0	POST TOP	NOT APPLICABLE	RIGID COLUMN	URBIS	AXIA 2 S1	PETITJEAN	SHEET STEEL	5	GALVANISED	NIDD
46101144	PARK LANE	Saxby All Saints Parish	499023.02	416395.36	5	7004	00192036	01/04/1995 00:00	6	2	LESS THAN 30MPH	VERGE	0	POST TOP	NOT APPLICABLE	RIGID COLUMN	URBIS	AXIA 2 S1	PETITJEAN	SHEET STEEL	5	GALVANISED	NIDD
46101144	PARK LANE	Saxby All Saints Parish	498988.91	416381.54	6	7005	00192037	01/04/1995 00:00	6	2	LESS THAN 30MPH	VERGE	0	POST TOP	NOT APPLICABLE	RIGID COLUMN	URBIS	AXIA 2 S1	PETITJEAN	SHEET STEEL	5	GALVANISED	NIDD
46101145	PARK LANE	Scawby Parish	497049.56	405572.73	1	7000	00192038	01/04/1980 00:00	2	2	LESS THAN 30MPH	VERGE	300	SINGLE ARM	NOT APPLICABLE	RIGID COLUMN	URBIS	AXIA 2 S1	PETITJEAN	SHEET STEEL	5	GALVANISED	DAER
46101145	PARK LANE	Scawby Parish	497048.81	405612.52	2	7001	00192039	01/04/1980 00:00	2	2	LESS THAN 30MPH	ON POLE	500	SINGLE ARM	NOT APPLICABLE	POLE MOUNTED	URBIS	AXIA 2 S1	WOODEN PO	WOOD	5	NOT APPLICABI	Not Applicable
46101145	PARK LANE	Scawby Parish	497046.75	405658.03	3	7002	00192040	01/04/1980 00:00	2	2	LESS THAN 30MPH	ON POLE	500	SINGLE ARM	NOT APPLICABLE	POLE MOUNTED	URBIS	AXIA 2 S1	WOODEN PO	WOOD	5	NOT APPLICABI	Not Applicable
46101146	PARK STREET	Messingham Parish	489274.43	404554.03	1	7000	00192041	01/04/1980 00:00	4	1	LESS THAN 30MPH	ON POLE	300	SINGLE ARM	NOT APPLICABLE	POLE MOUNTED	URBIS	AXIA 2 S1	WOODEN PO	WOOD	5	NOT APPLICABI	Not Applicable
46101146	PARK STREET	Messingham Parish	489234.97	404547.5	2	7001	00192042	01/04/1980 00:00	4	1	LESS THAN 30MPH	ON POLE	300	SINGLE ARM	NOT APPLICABLE	POLE MOUNTED	URBIS	AXIA 2 S1	WOODEN PO	WOOD	5	NOT APPLICABI	Not Applicable
46101146	PARK STREET	Messingham Parish	489193.03	404542.26	3	7002	00192043	01/04/1980 00:00	4	1	LESS THAN 30MPH	ON POLE	300	SINGLE ARM	NOT APPLICABLE	POLE MOUNTED	URBIS	AXIA 2 S1	WOODEN PO	WOOD	5	NOT APPLICABI	Not Applicable
46101146	PARK STREET	Messingham Parish	489147.13	404536.27	4	7003	00192044	01/04/1980 00:00	4	1	LESS THAN 30MPH	ON POLE	300	SINGLE ARM	NOT APPLICABLE	POLE MOUNTED	URBIS	AXIA 2 S1	WOODEN PO	WOOD	5	NOT APPLICABI	Not Applicable
46101146	PARK STREET	Messingham Parish	489109.26	404529.99	5	7004	00192045	01/04/1980 00:00	4	1	LESS THAN 30MPH	ON POLE	300	SINGLE ARM	NOT APPLICABLE	POLE MOUNTED	URBIS	AXIA 2 S1	WOODEN PO	WOOD	5	NOT APPLICABI	Not Applicable
46101146	PARK STREET	Messingham Parish	489063.56	404519.9	6	7005	00192046	01/04/1980 00:00	4	1	LESS THAN 30MPH	VERGE	300	SINGLE ARM	LIGHT GREY	RIGID COLUMN	URBIS	AXIA 2 S1	PETITJEAN	SHEET STEEL	5	PAINTED	DAER
46101146	PARK STREET	Messingham Parish	489034.44	404519.39	7	7006	00192047	01/04/1980 00:00	4	1	LESS THAN 30MPH	VERGE	300	SINGLE ARM	LIGHT GREY	RIGID COLUMN	URBIS	AXIA 2 S1	PETITJEAN	SHEET STEEL	5	PAINTED	DAER
46101147	PARK STREET	Winterton Parish	493123.04	418428.5	1	7000	00192048	01/04/2015 00:00	1	1	LESS THAN 30MPH	ON POLE	300	SINGLE ARM	NOT APPLICABLE	POLE MOUNTED	URBIS	AXIA 2 S1	WOODEN PO	WOOD	6	NOT APPLICABI	Not Applicable
46101147	PARK STREET	Winterton Parish	493498.97	418441.75	10	7008	00192056	01/04/2015 00:00	1	1	LESS THAN 30MPH	ON POLE	300	SINGLE ARM	NOT APPLICABLE	POLE MOUNTED	URBIS	AXIA 2 S1	WOODEN PO	WOOD	6	NOT APPLICABI	Not Applicable
46101147	PARK STREET	Winterton Parish	493534.12	418438.93	11	7009	00192057	01/04/1990 00:00	1	1	LESS THAN 30MPH	BACK OF FOOTPATH	800	SINGLE ARM	MID GREY	RIGID COLUMN	URBIS	AXIA 2 S1	PETITJEAN	SHEET STEEL	6	PAINTED	DAER
46101147	PARK STREET	Winterton Parish	493559.49	418434.59	12	7010	00192058	01/04/1990 00:00	1	1	LESS THAN 30MPH	BACK OF FOOTPATH	800	SINGLE ARM	MID GREY	RIGID COLUMN	URBIS	AXIA 2 S1	PETITJEAN	SHEET STEEL	6	PAINTED	DAER
46101147	PARK STREET	Winterton Parish	493587.41	418421.5	13	7011	00192059	01/04/1990 00:00	1	1	LESS THAN 30MPH	VERGE	800	SINGLE ARM	MID GREY	RIGID COLUMN	URBIS	AXIA 2 S1	PETITJEAN	SHEET STEEL	6	PAINTED	DAER
46101147	PARK STREET	Winterton Parish	493613.9	418423.52	14	7012	00192060	01/04/1990 00:00	1	1	LESS THAN 30MPH	VERGE	800	SINGLE ARM	MID GREY	RIGID COLUMN	URBIS	AXIA 2 S1	PETITJEAN	SHEET STEEL	6	PAINTED	DAER
46101147	PARK STREET	Winterton Parish	493639.25	418426.67	15	7013	00192061	01/04/1990 00:00	1	1	LESS THAN 30MPH	BACK OF FOOTPATH	800	SINGLE ARM	MID GREY	RIGID COLUMN	URBIS	AXIA 2 S1	PETITJEAN	SHEET STEEL	6	PAINTED	DAER
46101147	PARK STREET	Winterton Parish	493660.91	418439.58	16	7014	00192062	01/04/1990 00:00	1	1	LESS THAN 30MPH	BACK OF FOOTPATH	800	SINGLE ARM	MID GREY	RIGID COLUMN	URBIS	AXIA 2 S1	PETITJEAN	SHEET STEEL	6	PAINTED	DAER
46101147	PARK STREET	Winterton Parish	493677.15	418423.38	17FP	7015	00192063	01/04/1990 00:00	1	1	LESS THAN 30MPH	VERGE	800	SINGLE ARM	MID GREY	RIGID COLUMN	URBIS	AXIA 2 S1	PETITJEAN	SHEET STEEL	6	PAINTED	DAER
46101147	PARK STREET	Winterton Parish	493686.54	418442.16	18FP	7016	00192064	01/04/1990 00:00	1	1	LESS THAN 30MPH	VERGE	800	SINGLE ARM	MID GREY	RIGID COLUMN	URBIS	AXIA 2 S1	PETITJEAN	SHEET STEEL	6	PAINTED	DAER
46101147	PARK STREET	Winterton Parish	493161.29	418427.11	2	7001	00192049	01/04/2015 00:00	1	1	LESS THAN 30MPH	ON POLE	300	SINGLE ARM	NOT APPLICABLE	POLE MOUNTED	URBIS	AXIA 2 S1	WOODEN PO	WOOD	6	NOT APPLICABI	PUDSEY DIAMOND
46101147	PARK STREET	Winterton Parish	493209.23	418424.88	3FP	7017	00192065	01/04/1978 00:00	1	1	LESS THAN 30MPH	FR

46101173	PHILIPS CRESCENT	Scunthorpe	488715.85	411088.89	1	7000	00192224	01/04/1993 00:00	6	3	LESS THAN 30MPH	BACK OF FOOTPATH	800	SINGLE ARM	NOT APPLICABLE	RIGID COLUMN	URBIS	AXIA 2 S1	PETITJEAN	SHEET STEEL	6	GALVANISED	DAER	
46101173	PHILIPS CRESCENT	Scunthorpe	488683.26	411095.01	2	7001	00192225	01/04/1993 00:00	6	3	LESS THAN 30MPH	BACK OF FOOTPATH	800	SINGLE ARM	NOT APPLICABLE	RIGID COLUMN	URBIS	AXIA 2 S1	PETITJEAN	SHEET STEEL	6	GALVANISED	DAER	
46101173	PHILIPS CRESCENT	Scunthorpe	488650.75	411090.39	3	7002	00192226	01/04/1993 00:00	6	3	LESS THAN 30MPH	BACK OF FOOTPATH	800	SINGLE ARM	NOT APPLICABLE	RIGID COLUMN	URBIS	AXIA 2 S1	PETITJEAN	SHEET STEEL	6	GALVANISED	DAER	
46101174	PIMPERNEL WAY	Scunthorpe	490820.24	407952.2	1	7000	00192227	01/04/1988 00:00	1	3	LESS THAN 30MPH	VERGE	0	POST TOP	LIGHT GREY	RIGID COLUMN	URBIS	AXIA 2 S1	PETITJEAN	SHEET STEEL	5	PAINTED	NIDD	
46101174	PIMPERNEL WAY	Scunthorpe	490791.12	407944.29	2	7001	00192228	01/04/1988 00:00	1	3	LESS THAN 30MPH	VERGE	0	POST TOP	LIGHT GREY	RIGID COLUMN	URBIS	AXIA 2 S1	PETITJEAN	SHEET STEEL	5	PAINTED	NIDD	
46101174	PIMPERNEL WAY	Scunthorpe	490764.25	407936.21	3	7002	00192229	01/04/1988 00:00	1	3	LESS THAN 30MPH	VERGE	0	POST TOP	LIGHT GREY	RIGID COLUMN	URBIS	AXIA 2 S1	PETITJEAN	SHEET STEEL	5	PAINTED	NIDD	
46101175	PINCHBECK AVENUE	Scunthorpe	490211.21	410832.17	1	7000	00192230	21/01/2020 00:00	2	4	LESS THAN 30MPH	BACK OF FOOTPATH	0	POST TOP	NOT APPLICABLE	RIGID COLUMN	URBIS	AXIA 2 S1	MALLATITE	TUBULAR STEEL	6	GALVANISED	TUBULAR	
46101175	PINCHBECK AVENUE	Scunthorpe	490215.52	410867.92	2	7001	00192231	21/01/2020 00:00	2	4	LESS THAN 30MPH	BACK OF FOOTPATH	0	POST TOP	NOT APPLICABLE	RIGID COLUMN	URBIS	AXIA 2 S1	MALLATITE	TUBULAR STEEL	6	GALVANISED	TUBULAR	
46101175	PINCHBECK AVENUE	Scunthorpe	490206.3	410899.65	3	7002	00192232	21/01/2020 00:00	2	4	LESS THAN 30MPH	BACK OF FOOTPATH	0	POST TOP	NOT APPLICABLE	RIGID COLUMN	URBIS	AXIA 2 S1	MALLATITE	TUBULAR STEEL	6	GALVANISED	TUBULAR	
46101176	PINETREE CLOSE	Broughton Parish	496412.19	409491.7	1	7000	00192233	01/04/1980 00:00	1	1	LESS THAN 30MPH	BACK OF FOOTPATH	0	POST TOP	NOT APPLICABLE	RIGID COLUMN	URBIS	AXIA 2 S1	PETITJEAN	SHEET STEEL	5	GALVANISED	NIDD	
46101176	PINETREE CLOSE	Broughton Parish	496438.02	409494.21	2	7001	00192234	01/04/1980 00:00	1	1	LESS THAN 30MPH	BACK OF FOOTPATH	0	POST TOP	NOT APPLICABLE	RIGID COLUMN	URBIS	AXIA 2 S1	PETITJEAN	SHEET STEEL	5	GALVANISED	NIDD	
46101176	PINETREE CLOSE	Broughton Parish	496463.78	409475.58	3	7002	00192235	01/04/1980 00:00	1	1	LESS THAN 30MPH	BACK OF FOOTPATH	0	POST TOP	NOT APPLICABLE	RIGID COLUMN	URBIS	AXIA 2 S1	PETITJEAN	SHEET STEEL	5	GALVANISED	NIDD	
46101176	PINETREE CLOSE	Broughton Parish	496487.88	409453.64	4	7003	00192236	01/04/1980 00:00	1	1	LESS THAN 30MPH	BACK OF FOOTPATH	0	POST TOP	NOT APPLICABLE	RIGID COLUMN	URBIS	AXIA 2 S1	PETITJEAN	SHEET STEEL	5	GALVANISED	NIDD	
46101176	PINETREE CLOSE	Broughton Parish	496502.29	409430.36	5	7004	00192237	01/04/1980 00:00	1	1	LESS THAN 30MPH	BACK OF FOOTPATH	0	POST TOP	NOT APPLICABLE	RIGID COLUMN	URBIS	AXIA 2 S1	PETITJEAN	SHEET STEEL	5	GALVANISED	NIDD	
46101177	PINFOLD	Epworth Parish	478791.49	403627.87	1	7000	00192238	07/12/2018 00:00	5	3	LESS THAN 30MPH	BACK OF FOOTPATH	0	POST TOP	NOT APPLICABLE	RIGID COLUMN	URBIS	AXIA 2 S1	MALLATITE	TUBULAR STEEL	6	GALVANISED	TUBULAR	
46101177	PINFOLD	Epworth Parish	478761.61	403622.69	2	7001	00192239	07/12/2018 00:00	5	3	LESS THAN 30MPH	BACK OF FOOTPATH	0	POST TOP	NOT APPLICABLE	RIGID COLUMN	URBIS	AXIA 2 S1	MALLATITE	TUBULAR STEEL	6	GALVANISED	TUBULAR	
46101177	PINFOLD	Epworth Parish	478725.91	403628	3	7002	00192240	07/12/2018 00:00	5	3	LESS THAN 30MPH	BACK OF FOOTPATH	0	POST TOP	NOT APPLICABLE	RIGID COLUMN	URBIS	AXIA 2 S1	MALLATITE	TUBULAR STEEL	6	GALVANISED	TUBULAR	
46101177	PINFOLD	Epworth Parish	478690.12	403614.95	4	7003	00192241	07/12/2018 00:00	5	3	LESS THAN 30MPH	BACK OF FOOTPATH	0	POST TOP	NOT APPLICABLE	RIGID COLUMN	URBIS	AXIA 2 S1	MALLATITE	TUBULAR STEEL	6	GALVANISED	TUBULAR	
46101177	PINFOLD	Epworth Parish	478657.58	403614.24	5	7004	00192242	07/12/2018 00:00	5	3	LESS THAN 30MPH	BACK OF FOOTPATH	0	POST TOP	NOT APPLICABLE	RIGID COLUMN	URBIS	AXIA 2 S1	MALLATITE	TUBULAR STEEL	6	GALVANISED	TUBULAR	
46101178	PINGLEY LANE	Brigg Parish	500940.72	406985.23	1	7000	00192243	01/04/1980 00:00	2	3	LESS THAN 30MPH	VERGE	800	SINGLE ARM	NOT APPLICABLE	RIGID COLUMN	URBIS	AXIA 2 S1	PETITJEAN	SHEET STEEL	5	GALVANISED	DAER	
46101178	PINGLEY LANE	Brigg Parish	500956.29	406963.94	2	7001	00192244	01/04/1980 00:00	2	3	LESS THAN 30MPH	VERGE	0	POST TOP	NOT APPLICABLE	RIGID COLUMN	URBIS	AXIA 2 S1	PETITJEAN	SHEET STEEL	5	GALVANISED	NIDD	
46101179	PIPPIN DRIVE	Bottesford Parish	489696.39	406888.19	1	7000	00192245	01/04/1990 00:00	3	1	LESS THAN 30MPH	VERGE	0	POST TOP	NOT APPLICABLE	RIGID COLUMN	URBIS	AXIA 2 S1	FABRIKAT	TUBULAR STEEL	5	GALVANISED	5M01A	
46101179	PIPPIN DRIVE	Bottesford Parish	489696.87	406866.12	2	7001	00192246	01/04/1990 00:00	3	1	LESS THAN 30MPH	VERGE	0	POST TOP	NOT APPLICABLE	RIGID COLUMN	URBIS	AXIA 2 S1	FABRIKAT	TUBULAR STEEL	5	GALVANISED	5M01A	
46101179	PIPPIN DRIVE	Bottesford Parish	489724.07	406848.96	3	7002	00192247	01/04/1990 00:00	3	1	LESS THAN 30MPH	VERGE	0	POST TOP	NOT APPLICABLE	RIGID COLUMN	URBIS	AXIA 2 S1	FABRIKAT	TUBULAR STEEL	5	GALVANISED	5M01A	
46101179	PIPPIN DRIVE	Bottesford Parish	489738.84	406830.19	4	7003	00192248	01/04/1990 00:00	3	1	LESS THAN 30MPH	VERGE	0	POST TOP	NOT APPLICABLE	RIGID COLUMN	URBIS	AXIA 2 S1	FABRIKAT	TUBULAR STEEL	5	GALVANISED	5M01A	
46101180	PITMAN AVENUE	Barton upon Humber Parish	502330.91	421451.08	1	7000	00192249	01/04/2008 00:00	5	2	LESS THAN 30MPH	FRONT OF FOOTPATH	0	POST TOP	NOT APPLICABLE	RIGID COLUMN	URBIS	AXIA 2 S1	BRITISH STEE	TUBULAR STEEL	6	GALVANISED	ASH	
46101180	PITMAN AVENUE	Barton upon Humber Parish	502321.61	421426.7	2	7001	00192250	01/04/2008 00:00	5	2	LESS THAN 30MPH	BACK OF FOOTPATH	0	POST TOP	NOT APPLICABLE	RIGID COLUMN	URBIS	AXIA 2 S1	BRITISH STEE	TUBULAR STEEL	6	GALVANISED	ASH	
46101180	PITMAN AVENUE	Barton upon Humber Parish	502328.34	421403.6	3	7002	00192251	01/04/1980 00:00	5	2	LESS THAN 30MPH	BACK OF FOOTPATH	0	POST TOP	MID GREY	RIGID COLUMN	URBIS	AXIA 2 S1	PETITJEAN	SHEET STEEL	5	PAINTED	NIDD	
46101180	PITMAN AVENUE	Barton upon Humber Parish	502316.15	421379.53	4	7003	00192252	01/04/1980 00:00	5	2	LESS THAN 30MPH	BACK OF FOOTPATH	0	POST TOP	MID GREY	RIGID COLUMN	URBIS	AXIA 2 S1	PETITJEAN	SHEET STEEL	5	PAINTED	NIDD	
46101180	PITMAN AVENUE	Barton upon Humber Parish	502323.21	421355.17	5	7004	00192253	01/04/1980 00:00	5	2	LESS THAN 30MPH	BACK OF FOOTPATH	0	POST TOP	MID GREY	RIGID COLUMN	URBIS	AXIA 2 S1	PETITJEAN	SHEET STEEL	5	PAINTED	NIDD	
46101180	PITMAN AVENUE	Barton upon Humber Parish	502311.33	421333.35	6	7005	00192254	01/04/1980 00:00	5	2	LESS THAN 30MPH	BACK OF FOOTPATH	0	POST TOP	NOT APPLICABLE	RIGID COLUMN	URBIS	AXIA 2 S1	PETITJEAN	SHEET STEEL	5	GALVANISED	NIDD	
46101180	PITMAN AVENUE	Barton upon Humber Parish	502316.94	421301.5	7	7006	00192255	01/04/1980 00:00	5	2	LESS THAN 30MPH	BACK OF FOOTPATH	0	POST TOP	MID GREY	RIGID COLUMN	URBIS	AXIA 2 S1	PETITJEAN	SHEET STEEL	5	PAINTED	NIDD	
46101183	PLUM TREE WAY	Scunthorpe	489358.21	410455.76	1	7000	00192256	01/04/2001 00:00	2	4	LESS THAN 30MPH	FRONT OF FOOTPATH	300	SINGLE ARM	NOT APPLICABLE	RIGID COLUMN	URBIS	AXIA 2 S1	MALLATITE	TUBULAR STEEL	6	GALVANISED	STEPPED TUBULAR	
46101183	PLUM TREE WAY	Scunthorpe	489603.63	410486.15	10	7009	00192265	01/04/2001 00:00	2	4	LESS THAN 30MPH	FRONT OF FOOTPATH	300	SINGLE ARM	NOT APPLICABLE	RIGID COLUMN	URBIS	AXIA 2 S1	MALLATITE	TUBULAR STEEL	6	GALVANISED	STEPPED TUBULAR	
46101183	PLUM TREE WAY	Scunthorpe	489381.44	410450.82	2	7001	00192257	01/04/2001 00:00	2	4	LESS THAN 30MPH	BACK OF FOOTPATH	300	SINGLE ARM	NOT APPLICABLE	RIGID COLUMN	URBIS	AXIA 2 S1	MALLATITE	TUBULAR STEEL	6	GALVANISED	STEPPED TUBULAR	
46101183	PLUM TREE WAY	Scunthorpe	489408.47	410454.32	3	7002	00192258	01/04/2001 00:00	2	4	LESS THAN 30MPH	BACK OF FOOTPATH	300	SINGLE ARM	NOT APPLICABLE	RIGID COLUMN	URBIS	AXIA 2 S1	MALLATITE	TUBULAR STEEL	6	GALVANISED	STEPPED TUBULAR	
46101183	PLUM TREE WAY	Scunthorpe	489439.12	410460.23	4	7003	00192259	01/04/2001 00:00	2	4	LESS THAN 30MPH	BACK OF FOOTPATH	300	SINGLE ARM	NOT APPLICABLE	RIGID COLUMN	URBIS	AXIA 2 S1	MALLATITE	TUBULAR STEEL	6	GALVANISED	STEPPED TUBULAR	
46101183	PLUM TREE WAY	Scunthorpe	489464.92	410467.67	5	7004	00192260	01/04/2001 00:00	2	4	LESS THAN 30MPH	BACK OF FOOTPATH	300	SINGLE ARM	NOT APPLICABLE	RIGID COLUMN	URBIS	AXIA 2 S1	MALLATITE	TUBULAR STEEL	6	GALVANISED	STEPPED TUBULAR	
46101183	PLUM TREE WAY	Scunthorpe	489483.49	410480.52	6	7005	00192261	01/04/2001 00:00	2	4	LESS THAN 30MPH	FRONT OF FOOTPATH	300	SINGLE ARM	NOT APPLICABLE	RIGID COLUMN	URBIS	AXIA 2 S1	MALLATITE	TUBULAR STEEL	6	GALVANISED	STEPPED TUBULAR	
46101183	PLUM TREE WAY	Scunthorpe	489514.24	410482.99	7	7006	00192262	01/04/2001 00:00	2	4	LESS THAN 30MPH	FRONT OF FOOTPATH	300	SINGLE ARM	NOT APPLICABLE	RIGID COLUMN	URBIS	AXIA 2 S1	MALLATITE	TUBULAR STEEL	6	GALVANISED	STEPPED TUBULAR	
46101183	PLUM TREE WAY	Scunthorpe	489543.72	410483.01	8	7007	00192263	01/04/2001 00:00	2	4	LESS THAN 30MPH	FRONT OF FOOTPATH	300	SINGLE ARM	NOT APPLICABLE	RIGID COLUMN	URBIS	AXIA 2 S1	MALLATITE	TUBULAR STEEL	6	GALVANISED	STEPPED TUBULAR	
46101183	PLUM TREE WAY	Scunthorpe	489571.81	410483.43	9	7008	00192264	01/04/2001 00:00	2	4	LESS THAN 30MPH	FRONT OF FOOTPATH	300	SINGLE ARM	NOT APPLICABLE	RIGID COLUMN	URBIS	AXIA 2 S1	MALLATITE	TUBULAR STEEL	6	GALVANISED	STEPPED TUBULAR	
46101184	PLYMOUTH CLOSE	Winterton Parish	492265.74	418304.62	1	7000	00192266	05/03/2019 00:00	1	1	LESS THAN 30MPH	BACK OF FOOTPATH	0	POST TOP	NOT APPLICABLE	RIGID COLUMN	URBIS	AXIA 2 S1	MALLATITE	TUBULAR STEEL	6	GALVANISED	TUBULAR	
46101184	PLYMOUTH CLOSE	Winterton Parish	492282.49	418281.14	2	7001	00192267	05/03/2019 00:00	1	1	LESS THAN 30MPH	BACK OF FOOTPATH	0	POST TOP	NOT APPLICABLE	RIGID COLUMN	URBIS	AXIA 2 S1	MALLATITE	TUBULAR STEEL	6	GALVANISED	TUBULAR	
46101184	PLYMOUTH CLOSE	Winterton Parish	492286.6	418251.43	3	7002	00192268	05/03/2019 00:00	1	1	LESS THAN 30MPH	BACK OF FOOTPATH	0	POST TOP	NOT APPLICABLE	RIGID COLUMN	URBIS	AXIA 2 S1	MALLATITE	TUBULAR STEEL	6	GALVANISED	TUBULAR	
46101184	PLYMOUTH CLOSE	Winterton Parish	492266.71	418220.78	4	7003	00192269	05/03/2019 00:00	1	1	LESS THAN 30MPH	BACK OF FOOTPATH	0	POST TOP	NOT APPLICABLE	RIGID COLUMN	URBIS	AXIA 2 S1	MALLATITE	TUBULAR STEEL	6	GALVANISED	TUBULAR	
46101185	PLYMOUTH ROAD	Scunthorpe	487694.59	409476.65	1	7000	00192270	01/04/1979 00:00	5	2	LESS THAN 30MPH	BACK OF FOOTPATH	1500	SINGLE ARM	MID GREY	RIGID COLUMN	URBIS	AXIA 2 S1	PETITJEAN	SHEET STEEL	8	PAINTED	THAMES	
46101185	PLYMOUTH ROAD	Scunthorpe	487743.88	409663.84	10	7009	00192279	01/04/1979 00:00	5	2	LESS THAN 30MPH	BACK OF FOOTPATH	1500	SINGLE ARM	MID GREY	RIGID COLUMN	URBIS	AXIA 2 S1	PETITJEAN	SHEET STEEL	8	PAINTED	THAMES	
46101185	PLYMOUTH ROAD	Scunthorpe	487753.6	409693.35	11	7010	00192280	01/04/1979 00:00	5	2	LESS THAN 30MPH	VERGE	1500	SINGLE ARM	MID GREY	RIGID COLUMN	URBIS	AXIA 2 S1	PETITJEAN	SHEET STEEL	8	PAINTED	THAMES	
46101185	PLYMOUTH ROAD	Scunthorpe	487740.69	409725.37	12FP	7011	00192281	01/04/1979 00:00	5	2	LESS THAN 30MPH	BACK OF FOOTPATH	1500	SINGLE ARM	MID GREY	RIGID COLUMN	URBIS	AXIA 2 S1	PETITJEAN	SHEET STEEL	8	PAINTED	THAMES	
46101185	PLYMOUTH ROAD	Scunthorpe	487750.61	409748.02	13	7012	00192282	01/04/1979 00:00	5	2	LESS THAN 30MPH	VERGE	1500	SINGLE ARM	MID GREY	RIGID COLUMN	URBIS	AXIA 2 S1	PETITJEAN	SHEET STEEL	8	PAINTED	THAMES	
46101185	PLYMOUTH ROAD	Scunthorpe	487737.8	409782.69	14	7013	00192283	01/04/1979 00:00	5	2	LESS THAN 30MPH	BACK OF FOOTPATH	1500	SINGLE ARM	MID GREY	RIGID COLUMN	URBIS	AXIA 2 S1	PETITJEAN	SHEET STEEL	8	PAINTED	THAMES	
46101185	PLYMOUTH ROAD	Scunthorpe	487748.38	409809.46	15	7014	00192284	01/04/1979 00:00	5	2	LESS THAN 30MPH	BACK OF FOOTPATH	1500	SINGLE ARM	MID GREY	RIGID COLUMN	URBIS	AXIA 2 S1	PETITJEAN	SHEET STEEL	8	PAINTED	THAMES	
46101185	PLYMOUTH ROAD	Scunthorpe	487734.77	409842.43	16	7015	00192285	01/04/1979 00:00	5	2	LESS THAN 30MPH	BACK OF FOOTPATH	1500	SINGLE ARM	MID GREY	RIGID COLUMN	URBIS	AXIA 2 S1	PETITJEAN	SHEET STEEL	8	PAINTED	THAMES	
46101185	PLYMOUTH ROAD	Scunthorpe	487744.94	409874.43	17	7016	00192286	01/04/1979 00:00	5	2	LESS THAN 30MPH	BACK OF FOOTPATH	1500	SINGLE ARM	MID GREY	RIGID COLUMN	URBIS	AXIA 2 S1	PETITJEAN	SHEET STEEL	8	PAINTED	THAMES	
46101185	PLYMOUTH ROAD	Scunthorpe	487742.96	409901.74	18	7017	00192287	01/04/1979 00:00	5	2	LESS THAN 30MPH	BACK OF FOOTPATH	1500	SINGLE ARM	MID GREY	RIGID COLUMN	URBIS	AXIA 2 S1	PETITJEAN	SHEET STEEL	8	PAINTED	THAMES	
46101185	PLYMOUTH ROAD	Scunthorpe	487740.85	409933.88	19	7018	00192288	01/04/1979 00:00	5	2	LESS THAN 30MPH	BACK OF FOOTPATH	1500	SINGLE ARM	MID GREY	RIGID COLUMN	URBIS	AXIA 2 S1	PETITJEAN	SHEET STEEL	8	PAINTED	THAMES	
46101185	PLYMOUTH ROAD	Scunthorpe	487703.64	409499.11	2	7001	00192271	01/04/1979 00:00	5	2	LESS THAN 30MPH	BACK OF FOOTPATH	1500	SINGLE ARM	MID GREY	RIGID COLUMN	URBIS	AXIA 2 S1	PETITJEAN	SHEET STEEL	8	PAINTED	THAMES	
46101185	PLYMOUTH ROAD	Scunthorpe	487739.51	409964.39	20	7019	00192289	01/04/1979 00:00	5	2	LESS THAN 30MPH	BACK OF FOOTPATH	1500	SINGLE ARM	MID GREY	RIGID COLUMN	URBIS	AXIA 2 S1	PETITJEAN	SHEET STEEL	8	PAINTED	THAMES	
46101185	PLYMOUTH ROAD	Scunthorpe	487726.58	409987.16	21	7020	00192290	01/04/1979 00:00	5	2	LESS THAN 30MPH	BACK OF FOOTPATH	1500	SINGLE ARM	MID GREY	RIGID COLUMN	URBIS	AXIA 2 S1	PETITJEAN	SHEET STEEL	8	PAINTED	THAMES	
46101185	PLYMOUTH ROAD	Scunthorpe	487703.11	409989.85	22	7021	00192291	01/04/1979 00:00	5	2	LESS THAN 30MPH	BACK OF FOOTPATH	1500	SINGLE ARM	MID GREY	RIGID COLUMN	URBIS	AXIA 2 S1	PETITJEAN	SHEET STEEL	8	PAINTED	THAMES	
46101185	PLYMOUTH ROAD	Scunthorpe	487672.23	409977.93	23	7022	00192292	01/04/1979 00:00	5	2	LESS THAN 30MPH	BACK OF FOOTPATH	1500	SINGLE ARM	MID GREY	RIGID COLUMN	URBIS	AXIA 2 S1	PETITJEAN	SHEET STEEL	8	PAINTED	THAMES	
46101185	PLYMOUTH ROAD	Scunthorpe	487644.13	409990.32	24	7023	00192293	01/04/1979 00:00	5	2	LESS THAN 30MPH	BACK OF FOOTPATH	1500	SINGLE ARM	MID GREY	RIGID COLUMN	URBIS	AXIA 2 S1	PETITJEAN	SHEET STEEL	8	PAINTED	THAMES	
46101185	PLYMOUTH ROAD	Scunthorpe	487621.09	409977.06	25	7024	00192294	01/04/1979 00:00	5	2	LESS THAN 30MPH	BACK OF FOOTPATH	1500	SINGLE ARM	MID GREY	RIGID COLUMN	URBIS	AXIA 2 S1	PETITJEAN	SHEET STEEL	8	PAINTED	THAMES	
46101185	PLYMOUTH ROAD	Scunthorpe	487591.24	409989.74	26	7025	00192295	01/04/1979 00:00	5	2	LESS THAN 30MPH	BACK OF FOOTPATH	1500	SINGLE ARM	MID GREY	RIGID COLUMN	URBIS	AXIA 2 S1	PETITJEAN	SHEET STEEL	8	PAINTED	THAMES	
46101185	PLYMOUTH ROAD	Scunthorpe	487586.09	409977.67	27	7026	00192296	01/04/1979 00:00	5	2	LESS THAN 30MPH	BACK OF FOOTPATH	1500	SINGLE ARM	MID GREY	RIGID COLUMN	URBIS	AXIA 2 S1	PETITJEAN	SHEET STEEL	8	PAINTED	THAMES	
46101185	PLYMOUTH ROAD	Scunthorpe	487536.5	409982.18	28	7027	00192297	01/04/1979 00:00	5	2	LESS THAN 30MPH	BACK OF FOOTPATH	1500	SINGLE ARM	MID GREY	RIGID COLUMN	URBIS	AXIA 2 S1	PETITJEAN	SHEET STEEL	8	PAINTED	THAMES	
46101185	PLYMOUTH ROAD	Scunthorpe	487528.23	410007.14	29	7028	00192298	01/04/1979 00:00	5	2	LESS THAN 30MPH	BACK OF FOOTPATH	1500	SINGLE ARM	MID GREY	RIGID COLUMN	URBIS	AXIA 2 S1	PETITJEAN	SHEET STEEL	8	PAINTED	THAMES	
46101185	PLYMOUTH ROAD	Scunthorpe	487717.1	409521.05	3	7002	00192272	01/04/1979 00:00	5	2	LESS THAN 30MPH	BACK OF FOOTPATH	1500	SINGLE ARM	MID GREY	RIGID COLUMN	URBIS	AXIA 2 S1	PETITJEAN	SHEET STEEL	8	PAINTED	THAMES	
46101185	PLYMOUTH ROAD	Scunthorpe	487500.4	410013.85	30	7029	00192299	01/04/1979 00:00	5	2	LESS THAN 30MPH	BACK OF FOOTPATH	1500	SINGLE ARM	MID GREY	RIGID COLUMN	URBIS	AXIA 2 S1	PETITJEAN	SHEET STEEL	8	PAINTED	THAMES	
46101185	PLYMOUTH ROAD	Scunthorpe	487476.45	410004.22	31	7030	00192300	01/04/1979 00:00	5	2	LESS THAN 30MPH	BACK OF FOOTPATH	1500	SINGLE ARM	MID GREY	RIGID COLUMN	URBIS	AXIA 2 S1	PETITJEAN	SHEET STEEL	8	PAINTED	THAMES	
46101185	PLYMOUTH ROAD	Scunthorpe	487447.71	410018.27	32	7031	00192301	01/04/1979 00:00	5	2	LESS THAN 30MPH	BACK OF FOOTPATH	1500	SINGLE ARM	MID GREY	RIGID COLUMN	URBIS	AXIA 2 S1	PETITJEAN	SHEET STEEL	8	PAINTED	THAMES	
46101185	PLYMOUTH ROAD	Scunthorpe	487416.35	410008.43	33	7032	00192302	01/04/1979 00:00	5	2	LESS THAN 30MPH	BACK OF FOOTPATH	1500	SINGLE ARM	MID GREY	RIGID COLUMN	URBIS	AXIA 2 S1	PETITJEAN	SHEET STEEL	8	PAINTED	THAMES	
46101185	PLYMOUTH ROAD	Scunthorpe	487388.52	410022.18	34	7033	00192303	01/04/1979 00:00	5	2	LESS THAN 30MPH	BACK OF FOOTPATH	1500	SINGLE ARM	MID GREY	RIGID COLUMN	URBIS	AXIA 2 S1	PETITJEAN	SHEET STEEL	8	PAINTED	THAMES	
46101185	PLYMOUTH ROAD	Scunthorpe	487365.66	410011.61	35	7034	00192304	01/04/1979 00:00	5	2	LESS THAN 30MPH	BACK OF FOOTPATH	1500	SINGLE ARM	MID GREY	RIGID COLUMN	URBIS	AXIA 2 S1	PETITJEAN	SHEET STEEL	8	PAINTED	THAMES	
46101185	PLYMOUTH ROAD	Scunthorpe	487345.32	410025.14	36	7035	00192305	01/04/1979 00:00	5	2	LESS THAN 30MPH	BACK OF FOOTPATH	1500	SINGLE ARM	MID GREY	RIGID COLUMN	URBIS	AXIA 2 S1	PETITJEAN	SHEET STEEL	8	PAINTED	THAMES	
46101185	PLYMOUTH ROAD	Scunthorpe	487312.14	410015.41	37	7036	00192306	01/04/1979 00:00	5	2	LESS THAN 30MPH	BACK OF FOOTPATH	1500	SINGLE ARM	MID GREY	RIGID COLUMN	URBIS	AXIA 2 S1	PETITJEAN	SHEET STEEL	8	PAINTED	THAMES	
46101185	PLYMOUTH ROAD	Scunthorpe	487284.18	410029.49	38	7037	00192307	01/04/1979 00:00	5	2	LESS THAN 30MPH	BACK OF FOOTPATH	1500	SINGLE ARM	MID GREY	RIGID COLUMN	URBIS	AXIA 2 S1	PETITJEAN	SHEET STEEL	8	PAINTED	THAMES	
46101185	PLYMOUTH ROAD	Scunthorpe	487727.54	409538.85	4	7003	00192273	01/04/1979 00:00	5	2	LESS THAN 30MPH	BACK OF FOOTPATH	1500	SINGLE ARM	MID GREY	RIGID COLUMN	URBIS	AXIA 2 S1	PETITJEAN	SHEET STEEL	8	PAINTED	THAMES	
46101185	PLYMOUTH ROAD	Scunthorpe	487744.98	409547.23	5	7004	00192274	01/04/1979 00:00	5	2	LESS THAN 30MPH	VERGE	1500	SINGLE ARM	MID GREY	RIGID COLUMN	URBIS	AXIA 2 S1	PETITJEAN	SHEET STEEL	8	PAINTED	THAMES	
46101185	PLYMOUTH ROAD	Scunthorpe	487752.69	409571.37	6	7005	00192275	01/04/1979 00:00	5	2	LESS THAN 30MPH	VERGE	1500	SINGLE ARM	MID GREY	RIGID COLUMN	URBIS	AXIA 2 S1	PETITJEAN	SHEET STEEL	8	PAINTED	THAMES	
46101185	PLYMOUTH ROAD	Scunthorpe	487755.67	409597.65	7	7006	00192276	01/04/1979 00:00	5	2	LESS THAN 30MPH	VERGE	1500	SINGLE ARM	MID GREY	RIGID COLUMN	URBIS	AXIA 2 S1	PETITJEAN	SHEET STEEL	8	PAINTED	THAMES	
46101185	PLYMOUTH ROAD	Scunthorpe	487746.28	409619.45	8	7007	00192277	01/04/1979 00:00	5	2	LESS THAN 30MPH	BACK OF FOOTPATH	1500	SINGLE ARM	MID GREY	RIGID COLUMN	URBIS	AXIA 2 S1	PETITJEAN	SHEET STEEL	8	PAINTED	THAMES	
46101185	PLYMOUTH ROAD	Scunthorpe	487756.65	409636.56	9	7008	00192278	01/04/1979 00:00	5	2	LESS THAN 30MPH	VERGE	1500	SINGLE ARM	MID GREY	RIGID COLUMN	URBIS	AXIA 2 S1	PETITJEAN	SHEET STEEL	8	PAINTED	THAMES	
46101186	POACHERS CROFT	Belton Parish	478275.42	406091.83	1	7000	00192310	01/04/1980 00:00	5	3	LESS THAN 30MPH	BACK OF FOOTPATH	0	POST TOP	NOT APPLICABLE	RIGID COLUMN	URBIS	AXIA 2 S1	MALLATITE	TUBULAR STEEL	5	GALVANISED	STEPPED TUBULAR	
46101186	POACHERS CROFT	Belton Parish	478297.72	406117.15	2	7001	00192311	01/04/1980 00:00	5	3	LESS THAN 30MPH	BACK OF FOOTPATH	0	POST TOP	NOT APPLICABLE	RIGID COLUMN	URBIS	AXIA 2 S1	MALLATITE	TUBULAR STEEL	5	GALVANISED	STEPPED TUBULAR	
46101186	POACHERS CROFT	Belton Parish	478331.3	406122.52	3	7002	00192312	01/04/1980 00:00	5	3	LESS THAN 30MPH	BACK OF FOOTPATH	0	POST TO

46101210	PRIORY LANE	Scunthorpe	488976.87	408849.38	8	7007	00192442	01/04/2002 00:00	5	2	LESS THAN 30MPH	BACK OF FOOTPATH	1500	SINGLE ARM	NOT APPLICABLE	RIGID COLUMN	URBIS	AXIA 2 S1	PETITJEAN	SHEET STEEL	8	GALVANISED	THAMES
46101210	PRIORY LANE	Scunthorpe	488945.9	408850.55	9	7008	00192443	01/04/2002 00:00	5	2	LESS THAN 30MPH	BACK OF FOOTPATH	1500	SINGLE ARM	NOT APPLICABLE	RIGID COLUMN	URBIS	AXIA 2 S1	PETITJEAN	SHEET STEEL	8	GALVANISED	THAMES
46101211	PRIORY ROAD	Scunthorpe	489059.94	408658.96	1	7000	00192466	01/04/1990 00:00	5	2	LESS THAN 30MPH	BACK OF FOOTPATH	300	SINGLE ARM	NOT APPLICABLE	RIGID COLUMN	URBIS	AXIA 2 S1	PETITJEAN	SHEET STEEL	6	GALVANISED	DAER
46101211	PRIORY ROAD	Scunthorpe	489059.49	408684.66	2	7001	00192467	01/04/1990 00:00	5	2	LESS THAN 30MPH	BACK OF FOOTPATH	300	SINGLE ARM	NOT APPLICABLE	RIGID COLUMN	URBIS	AXIA 2 S1	PETITJEAN	SHEET STEEL	6	GALVANISED	DAER
46101211	PRIORY ROAD	Scunthorpe	489070.12	408710.26	3	7002	00192468	01/04/1990 00:00	5	2	LESS THAN 30MPH	BACK OF FOOTPATH	300	SINGLE ARM	NOT APPLICABLE	RIGID COLUMN	URBIS	AXIA 2 S1	PETITJEAN	SHEET STEEL	6	GALVANISED	DAER
46101211	PRIORY ROAD	Scunthorpe	489059.23	408737.21	4	7003	00192469	01/04/1990 00:00	5	2	LESS THAN 30MPH	BACK OF FOOTPATH	300	SINGLE ARM	NOT APPLICABLE	RIGID COLUMN	URBIS	AXIA 2 S1	PETITJEAN	SHEET STEEL	6	GALVANISED	DAER
46101211	PRIORY ROAD	Scunthorpe	489069.74	408762.31	5	7004	00192470	01/04/1990 00:00	5	2	LESS THAN 30MPH	BACK OF FOOTPATH	300	SINGLE ARM	NOT APPLICABLE	RIGID COLUMN	URBIS	AXIA 2 S1	PETITJEAN	SHEET STEEL	6	GALVANISED	DAER
46101211	PRIORY ROAD	Scunthorpe	489058.39	408785.88	6	7005	00192471	01/04/1990 00:00	5	2	LESS THAN 30MPH	BACK OF FOOTPATH	300	SINGLE ARM	NOT APPLICABLE	RIGID COLUMN	URBIS	AXIA 2 S1	PETITJEAN	SHEET STEEL	6	GALVANISED	DAER
46101211	PRIORY ROAD	Scunthorpe	489068.9	408810.81	7	7006	00192472	01/04/1990 00:00	5	2	LESS THAN 30MPH	BACK OF FOOTPATH	300	SINGLE ARM	NOT APPLICABLE	RIGID COLUMN	URBIS	AXIA 2 S1	PETITJEAN	SHEET STEEL	6	GALVANISED	DAER
46101211	PRIORY ROAD	Scunthorpe	489068.5	408837.78	8	7007	00192473	01/04/1990 00:00	5	2	LESS THAN 30MPH	BACK OF FOOTPATH	300	SINGLE ARM	NOT APPLICABLE	RIGID COLUMN	URBIS	AXIA 2 S1	PETITJEAN	SHEET STEEL	6	GALVANISED	DAER
46101212	PROCTORS WAY	Hibaldstow Parish	498257.82	402443.54	1	7000	00192474	01/04/1980 00:00	1	4	LESS THAN 30MPH	BACK OF FOOTPATH	0	POST TOP	NOT APPLICABLE	RIGID COLUMN	URBIS	AXIA 2 S1	PETITJEAN	SHEET STEEL	5	GALVANISED	NIDD
46101212	PROCTORS WAY	Hibaldstow Parish	498289.46	402447.13	2	7001	00192475	01/04/1980 00:00	1	4	LESS THAN 30MPH	BACK OF FOOTPATH	0	POST TOP	NOT APPLICABLE	RIGID COLUMN	URBIS	AXIA 2 S1	PETITJEAN	SHEET STEEL	5	GALVANISED	NIDD
46101213	PURBECK ROAD	Scunthorpe	487307.81	410192.68	1	7000	00192476	01/04/1980 00:00	5	2	LESS THAN 30MPH	VERGE	300	SINGLE ARM	NOT APPLICABLE	RIGID COLUMN	URBIS	AXIA 2 S1	PETITJEAN	SHEET STEEL	5	GALVANISED	DAER
46101213	PURBECK ROAD	Scunthorpe	487266.69	410184.26	2	7001	00192477	01/04/2010 00:00	5	2	LESS THAN 30MPH	BACK OF FOOTPATH	0	POST TOP	NOT APPLICABLE	RIGID COLUMN	URBIS	AXIA 2 S1	MALLATITE	TUBULAR STEEL	6	GALVANISED	TUBULAR
46101214	QUANTOCK CLOSE	Scunthorpe	487870.22	409728.2	1	7000	00192478	01/04/2010 00:00	5	2	LESS THAN 30MPH	BACK OF FOOTPATH	0	POST TOP	NOT APPLICABLE	RIGID COLUMN	URBIS	AXIA 2 S1	MALLATITE	TUBULAR STEEL	6	GALVANISED	TUBULAR
46101214	QUANTOCK CLOSE	Scunthorpe	487877.27	409758.19	2	7001	00192479	01/04/2010 00:00	5	2	LESS THAN 30MPH	BACK OF FOOTPATH	0	POST TOP	NOT APPLICABLE	RIGID COLUMN	URBIS	AXIA 2 S1	MALLATITE	TUBULAR STEEL	6	GALVANISED	TUBULAR
46101215	QUEBEC ROAD	Bottesford Parish	488071.84	407650.64	1	7000	00192480	01/04/2004 00:00	3	1	LESS THAN 30MPH	BACK OF FOOTPATH	500	SINGLE ARM	NOT APPLICABLE	RIGID COLUMN	URBIS	AXIA 2 S1	PETITJEAN	SHEET STEEL	8	GALVANISED	THAMES
46101215	QUEBEC ROAD	Bottesford Parish	488196.56	407420.12	10	7009	00192489	01/04/2004 00:00	3	1	LESS THAN 30MPH	BACK OF FOOTPATH	500	SINGLE ARM	NOT APPLICABLE	RIGID COLUMN	URBIS	AXIA 2 S1	PETITJEAN	SHEET STEEL	8	GALVANISED	THAMES
46101215	QUEBEC ROAD	Bottesford Parish	488223.55	407395.41	11	7010	00192490	01/04/2004 00:00	3	1	LESS THAN 30MPH	BACK OF FOOTPATH	500	SINGLE ARM	NOT APPLICABLE	RIGID COLUMN	URBIS	AXIA 2 S1	PETITJEAN	SHEET STEEL	8	GALVANISED	THAMES
46101215	QUEBEC ROAD	Bottesford Parish	488226.93	407359.49	12	7011	00192491	01/04/2004 00:00	3	1	LESS THAN 30MPH	BACK OF FOOTPATH	500	SINGLE ARM	NOT APPLICABLE	RIGID COLUMN	URBIS	AXIA 2 S1	PETITJEAN	SHEET STEEL	8	GALVANISED	THAMES
46101215	QUEBEC ROAD	Bottesford Parish	488239.49	407330.51	13	7012	00192492	01/04/2004 00:00	3	1	LESS THAN 30MPH	BACK OF FOOTPATH	500	SINGLE ARM	NOT APPLICABLE	RIGID COLUMN	URBIS	AXIA 2 S1	PETITJEAN	SHEET STEEL	8	GALVANISED	THAMES
46101215	QUEBEC ROAD	Bottesford Parish	488264.49	407302.82	14	7013	00192493	01/04/2004 00:00	3	1	LESS THAN 30MPH	BACK OF FOOTPATH	500	SINGLE ARM	NOT APPLICABLE	RIGID COLUMN	URBIS	AXIA 2 S1	PETITJEAN	SHEET STEEL	8	GALVANISED	THAMES
46101215	QUEBEC ROAD	Bottesford Parish	488263.35	407274.51	15	7014	00192494	01/04/2004 00:00	3	1	LESS THAN 30MPH	BACK OF FOOTPATH	500	SINGLE ARM	NOT APPLICABLE	RIGID COLUMN	URBIS	AXIA 2 S1	PETITJEAN	SHEET STEEL	8	GALVANISED	THAMES
46101215	QUEBEC ROAD	Bottesford Parish	488286.03	407248.66	16	7015	00192495	01/04/2004 00:00	3	1	LESS THAN 30MPH	BACK OF FOOTPATH	500	SINGLE ARM	NOT APPLICABLE	RIGID COLUMN	URBIS	AXIA 2 S1	PETITJEAN	SHEET STEEL	8	GALVANISED	THAMES
46101215	QUEBEC ROAD	Bottesford Parish	488288.6	407211.88	17	7016	00192496	01/04/2004 00:00	3	1	LESS THAN 30MPH	BACK OF FOOTPATH	500	SINGLE ARM	NOT APPLICABLE	RIGID COLUMN	URBIS	AXIA 2 S1	PETITJEAN	SHEET STEEL	8	GALVANISED	THAMES
46101215	QUEBEC ROAD	Bottesford Parish	488313.87	407179.97	18	7017	00192497	01/04/2004 00:00	3	1	LESS THAN 30MPH	BACK OF FOOTPATH	500	SINGLE ARM	NOT APPLICABLE	RIGID COLUMN	URBIS	AXIA 2 S1	PETITJEAN	SHEET STEEL	8	GALVANISED	THAMES
46101215	QUEBEC ROAD	Bottesford Parish	488322.21	407152.18	19	7018	00192498	01/04/2004 00:00	3	1	LESS THAN 30MPH	BACK OF FOOTPATH	500	SINGLE ARM	NOT APPLICABLE	RIGID COLUMN	URBIS	AXIA 2 S1	PETITJEAN	SHEET STEEL	8	GALVANISED	THAMES
46101215	QUEBEC ROAD	Bottesford Parish	488065.61	407626.87	2	7001	00192481	01/04/2004 00:00	3	1	LESS THAN 30MPH	BACK OF FOOTPATH	500	SINGLE ARM	NOT APPLICABLE	RIGID COLUMN	URBIS	AXIA 2 S1	PETITJEAN	SHEET STEEL	8	GALVANISED	THAMES
46101215	QUEBEC ROAD	Bottesford Parish	488347.5	407143.75	20	7019	00192499	01/04/2004 00:00	3	1	LESS THAN 30MPH	BACK OF FOOTPATH	500	SINGLE ARM	NOT APPLICABLE	RIGID COLUMN	URBIS	AXIA 2 S1	PETITJEAN	SHEET STEEL	8	GALVANISED	THAMES
46101215	QUEBEC ROAD	Bottesford Parish	488074.48	407599.19	3	7002	00192482	01/04/2004 00:00	3	1	LESS THAN 30MPH	BACK OF FOOTPATH	500	SINGLE ARM	NOT APPLICABLE	RIGID COLUMN	URBIS	AXIA 2 S1	PETITJEAN	SHEET STEEL	8	GALVANISED	THAMES
46101215	QUEBEC ROAD	Bottesford Parish	488099.51	407581.54	4	7003	00192483	01/04/2004 00:00	3	1	LESS THAN 30MPH	BACK OF FOOTPATH	500	SINGLE ARM	NOT APPLICABLE	RIGID COLUMN	URBIS	AXIA 2 S1	PETITJEAN	SHEET STEEL	8	GALVANISED	THAMES
46101215	QUEBEC ROAD	Bottesford Parish	488109.6	407546.38	5	7004	00192484	01/04/2004 00:00	3	1	LESS THAN 30MPH	BACK OF FOOTPATH	500	SINGLE ARM	NOT APPLICABLE	RIGID COLUMN	URBIS	AXIA 2 S1	PETITJEAN	SHEET STEEL	8	GALVANISED	THAMES
46101215	QUEBEC ROAD	Bottesford Parish	488136.54	407529.07	6	7005	00192485	01/04/2004 00:00	3	1	LESS THAN 30MPH	BACK OF FOOTPATH	500	SINGLE ARM	NOT APPLICABLE	RIGID COLUMN	URBIS	AXIA 2 S1	PETITJEAN	SHEET STEEL	8	GALVANISED	THAMES
46101215	QUEBEC ROAD	Bottesford Parish	488143.57	407500.21	7	7006	00192486	01/04/2004 00:00	3	1	LESS THAN 30MPH	FRONT OF FOOTPATH	500	SINGLE ARM	NOT APPLICABLE	RIGID COLUMN	URBIS	AXIA 2 S1	PETITJEAN	SHEET STEEL	8	GALVANISED	THAMES
46101215	QUEBEC ROAD	Bottesford Parish	488161.01	407471.5	8	7007	00192487	01/04/2004 00:00	3	1	LESS THAN 30MPH	BACK OF FOOTPATH	500	SINGLE ARM	NOT APPLICABLE	RIGID COLUMN	URBIS	AXIA 2 S1	PETITJEAN	SHEET STEEL	8	GALVANISED	THAMES
46101215	QUEBEC ROAD	Bottesford Parish	488191.15	407449.75	9	7008	00192488	01/04/2004 00:00	3	1	LESS THAN 30MPH	BACK OF FOOTPATH	500	SINGLE ARM	NOT APPLICABLE	RIGID COLUMN	URBIS	AXIA 2 S1	PETITJEAN	SHEET STEEL	8	GALVANISED	THAMES
46101216	QUEEN ELIZABETH AVENUE	South Ferriby Parish	498643.79	420982.65	1	7000	00192500	01/04/1996 00:00	6	3	LESS THAN 30MPH	VERGE	300	SINGLE ARM	NOT APPLICABLE	RIGID COLUMN	URBIS	AXIA 2 S1	BRITISH STEE	TUBULAR STEEL	5	GALVANISED	OTHER
46101216	QUEEN ELIZABETH AVENUE	South Ferriby Parish	498623.74	421001.52	2	7001	00192501	01/04/1996 00:00	6	3	LESS THAN 30MPH	VERGE	300	SINGLE ARM	NOT APPLICABLE	RIGID COLUMN	URBIS	AXIA 2 S1	BRITISH STEE	TUBULAR STEEL	5	GALVANISED	OTHER
46101217	QUEEN ELIZABETH WAY	Barton upon Humber Parish	503565.95	421057.35	1	7000	00192502	01/04/1982 00:00	5	2	LESS THAN 30MPH	BACK OF FOOTPATH	0	POST TOP	MID GREY	RIGID COLUMN	URBIS	AXIA 2 S1	PETITJEAN	SHEET STEEL	5	PAINTED	NIDD
46101217	QUEEN ELIZABETH WAY	Barton upon Humber Parish	503595.49	421057.33	2	7001	00192503	01/04/1982 00:00	5	2	LESS THAN 30MPH	BACK OF FOOTPATH	0	POST TOP	MID GREY	RIGID COLUMN	URBIS	AXIA 2 S1	PETITJEAN	SHEET STEEL	5	PAINTED	NIDD
46101217	QUEEN ELIZABETH WAY	Barton upon Humber Parish	503614.64	421087.91	3	7002	00192504	01/04/1982 00:00	5	2	LESS THAN 30MPH	BACK OF FOOTPATH	0	POST TOP	MID GREY	RIGID COLUMN	URBIS	AXIA 2 S1	PETITJEAN	SHEET STEEL	5	PAINTED	NIDD
46101217	QUEEN ELIZABETH WAY	Barton upon Humber Parish	503645.55	421094.71	4	7003	00192505	01/04/1982 00:00	5	2	LESS THAN 30MPH	BACK OF FOOTPATH	0	POST TOP	MID GREY	RIGID COLUMN	URBIS	AXIA 2 S1	PETITJEAN	SHEET STEEL	5	PAINTED	NIDD
46101217	QUEEN ELIZABETH WAY	Barton upon Humber Parish	503675.99	421101.95	5	7004	00192506	01/04/1982 00:00	5	2	LESS THAN 30MPH	VERGE	0	POST TOP	MID GREY	RIGID COLUMN	URBIS	AXIA 2 S1	PETITJEAN	SHEET STEEL	5	PAINTED	NIDD
46101217	QUEEN ELIZABETH WAY	Barton upon Humber Parish	503676.37	421129.45	6	7005	00192507	01/04/1982 00:00	5	2	LESS THAN 30MPH	VERGE	0	POST TOP	MID GREY	RIGID COLUMN	URBIS	AXIA 2 S1	PETITJEAN	SHEET STEEL	5	PAINTED	NIDD
46101217	QUEEN ELIZABETH WAY	Barton upon Humber Parish	503660.26	421137.67	7	7006	00192508	01/04/1982 00:00	5	2	LESS THAN 30MPH	VERGE	0	POST TOP	MID GREY	RIGID COLUMN	URBIS	AXIA 2 S1	PETITJEAN	SHEET STEEL	5	PAINTED	NIDD
46101217	QUEEN ELIZABETH WAY	Barton upon Humber Parish	503689.48	421146.11	8	7007	00192509	01/04/1982 00:00	5	2	LESS THAN 30MPH	VERGE	0	POST TOP	MID GREY	RIGID COLUMN	URBIS	AXIA 2 S1	PETITJEAN	SHEET STEEL	5	PAINTED	NIDD
46101218	QUEEN STREET	Barton upon Humber Parish	503134.46	422083.08	1	7000	00192511	01/04/1999 00:00	5	2	LESS THAN 30MPH	BACK OF FOOTPATH	800	SINGLE ARM	BLACK	RIGID COLUMN	METCRAFT	WINSTON 3	MALLATITE	TUBULAR STEEL	6	PAINTED	STEPPED TUBULAR
46101218	QUEEN STREET	Barton upon Humber Parish	503139.39	422104.82	2	7001	00192512	01/04/1999 00:00	5	2	LESS THAN 30MPH	BACK OF FOOTPATH	800	SINGLE ARM	BLACK	RIGID COLUMN	METCRAFT	WINSTON 3	MALLATITE	TUBULAR STEEL	6	PAINTED	STEPPED TUBULAR
46101218	QUEEN STREET	Barton upon Humber Parish	503144.71	422125.21	3	7002	00192513	01/04/2002 00:00	5	2	LESS THAN 30MPH	BACK OF FOOTPATH	800	SINGLE ARM	BLACK	RIGID COLUMN	METCRAFT	WINSTON 3	MALLATITE	TUBULAR STEEL	6	PAINTED	STEPPED TUBULAR
46101218	QUEEN STREET	Barton upon Humber Parish	503148.38	422143.19	4	7003	00192514	01/04/2002 00:00	5	2	LESS THAN 30MPH	BACK OF FOOTPATH	800	SINGLE ARM	BLACK	RIGID COLUMN	METCRAFT	WINSTON 3	MALLATITE	TUBULAR STEEL	6	PAINTED	STEPPED TUBULAR
46101218	QUEEN STREET	Barton upon Humber Parish	503153.5	422165.11	5	7004	00192515	01/04/2002 00:00	5	2	LESS THAN 30MPH	BACK OF FOOTPATH	800	SINGLE ARM	BLACK	RIGID COLUMN	METCRAFT	WINSTON 3	MALLATITE	TUBULAR STEEL	6	PAINTED	STEPPED TUBULAR
46101218	QUEEN STREET	Barton upon Humber Parish	503159.54	422189.5	6	7005	00192516	01/04/2002 00:00	5	2	LESS THAN 30MPH	BACK OF FOOTPATH	800	SINGLE ARM	BLACK	RIGID COLUMN	METCRAFT	WINSTON 3	MALLATITE	TUBULAR STEEL	6	PAINTED	STEPPED TUBULAR
46101218	QUEEN STREET	Barton upon Humber Parish	503161.14	422210.99	7	7006	00192517	01/04/2002 00:00	5	2	LESS THAN 30MPH	BACK OF FOOTPATH	800	SINGLE ARM	BLACK	RIGID COLUMN	METCRAFT	WINSTON 3	MALLATITE	TUBULAR STEEL	6	PAINTED	STEPPED TUBULAR
46101218	QUEEN STREET	Barton upon Humber Parish	503162.15	422234.32	8	7007	00192518	01/04/2002 00:00	5	2	LESS THAN 30MPH	BACK OF FOOTPATH	800	SINGLE ARM	BLACK	RIGID COLUMN	METCRAFT	WINSTON 3	MALLATITE	TUBULAR STEEL	6	PAINTED	STEPPED TUBULAR
46101218	QUEEN STREET	Barton upon Humber Parish	503172.85	422262.44	9	7008	00192519	01/04/2002 00:00	5	2	LESS THAN 30MPH	BACK OF FOOTPATH	800	SINGLE ARM	BLACK	RIGID COLUMN	METCRAFT	WINSTON 3	MALLATITE	TUBULAR STEEL	6	PAINTED	STEPPED TUBULAR
46101219	QUEEN STREET	Brigg Parish	500251.35	407230.51	1	7000	00192520	04/11/2019 00:00	2	3	LESS THAN 30MPH	FRONT OF FOOTPATH	0	POST TOP	NOT APPLICABLE	RIGID COLUMN	URBIS	AXIA 2 S1	MALLATITE	TUBULAR STEEL	6	GALVANISED	TUBULAR
46101219	QUEEN STREET	Brigg Parish	500260.63	407201.87	2	7001	00192521	04/11/2019 00:00	2	3	LESS THAN 30MPH	FRONT OF FOOTPATH	0	POST TOP	NOT APPLICABLE	RIGID COLUMN	URBIS	AXIA 2 S1	MALLATITE	TUBULAR STEEL	6	GALVANISED	TUBULAR
46101219	QUEEN STREET	Brigg Parish	500260.34	407168.94	3	7002	00192522	04/11/2019 00:00	2	3	LESS THAN 30MPH	FRONT OF FOOTPATH	0	POST TOP	NOT APPLICABLE	RIGID COLUMN	URBIS	AXIA 2 S1	MALLATITE	TUBULAR STEEL	6	GALVANISED	TUBULAR
46101220	QUEEN STREET	Epworth Parish	478317.74	403772.53	1	7000	00192523	01/04/2004 00:00	5	3	LESS THAN 30MPH	BACK OF FOOTPATH	500	SINGLE ARM	BLACK	RIGID COLUMN	URBIS	ALBANY	MALLATITE	TUBULAR STEEL	8	PAINTED	STEPPED TUBULAR
46101220	QUEEN STREET	Epworth Parish	478312.27	403742.39	2	7001	00192524	01/04/1985 00:00	5	3	LESS THAN 30MPH	BACK OF FOOTPATH	300	SINGLE ARM	LIGHT GREY	RIGID COLUMN	URBIS	AXIA 2 S1	FABRIKAT	SHEET STEEL	6	PAINTED	6M03B
46101220	QUEEN STREET	Epworth Parish	478302.44	403713.86	3	7002	00192525	01/04/1980 00:00	5	3	LESS THAN 30MPH	BACK OF FOOTPATH	0	POST TOP	NOT APPLICABLE	RIGID COLUMN	URBIS	AXIA 2 S1	PETITJEAN	SHEET STEEL	5	GALVANISED	NIDD
46101220	QUEEN STREET	Epworth Parish	478307.86	403675.53	4	7003	00192526	01/04/1980 00:00	5	3	LESS THAN 30MPH	BACK OF FOOTPATH	0	POST TOP	NOT APPLICABLE	RIGID COLUMN	URBIS	AXIA 2 S1	PETITJEAN	SHEET STEEL	5	GALVANISED	NIDD
46101220	QUEEN STREET	Epworth Parish	478303.54	403636.11	5	7004	00192527	01/04/1989 00:00	5	3	LESS THAN 30MPH	BACK OF FOOTPATH	0	POST TOP	NOT APPLICABLE	RIGID COLUMN	URBIS	AXIA 2 S1	PETITJEAN	SHEET STEEL	5	GALVANISED	NIDD
46101220	QUEEN STREET	Epworth Parish	478314.9	403609.82	6	7005	00192528	01/04/1980 00:00	5	3	LESS THAN 30MPH	BACK OF FOOTPATH	0	POST TOP	NOT APPLICABLE	RIGID COLUMN	URBIS	AXIA 2 S1	PETITJEAN	SHEET STEEL	5	GALVANISED	NIDD
46101221	QUEEN STREET	Kirton in Lindsey Parish	493799.18	398507.86	1	7000	00192529	01/04/2007 00:00	1	3	BETWEEN 30-50 MPH	BACK OF FOOTPATH	0	POST TOP	BLACK	RIGID COLUMN	URBIS	AXIA 2 S1	MALLATITE	TUBULAR STEEL	6	PAINTED	STEPPED TUBULAR
46101221	QUEEN STREET	Kirton in Lindsey Parish	493608.78	398670.68	10	7009	00192538	01/04/2007 00:00	1	3	BETWEEN 30-50 MPH	BACK OF FOOTPATH	0	POST TOP	BLACK	RIGID COLUMN	URBIS	AXIA 2 S1	MALLATITE	TUBULAR STEEL	6	PAINTED	STEPPED TUBULAR
46101221	QUEEN STREET	Kirton in Lindsey Parish	493586.66	398694.2	11	7010	00192539	01/04/2007 00:00	1	3	BETWEEN 30-50 MPH	ON POLE	300	SINGLE ARM	NOT APPLICABLE	POLE MOUNTED	URBIS	AXIA 2 S1	WOODEN PO	WOOD	6	NOT APPLICABI	Not Applicable
46101221	QUEEN STREET	Kirton in Lindsey Parish	493565.66	398726.4	12	7011	00192540	01/04/2007 00:00	1	3	BETWEEN 30-50 MPH	ON POLE	300	SINGLE ARM	NOT APPLICABLE	POLE MOUNTED	URBIS	AXIA 2 S1	WOODEN PO	WOOD	6	NOT APPLICABI	Not Applicable
46101221	QUEEN STREET	Kirton in Lindsey Parish	493560.48	398753	13	7012	00192541	01/04/2007 00:00	1	3	BETWEEN 30-50 MPH	BACK OF FOOTPATH	0	POST TOP	BLACK	RIGID COLUMN	URBIS	AXIA 2 S1	MALLATITE	TUBULAR STEEL	6	PAINTED	STEPPED TUBULAR
46101221	QUEEN STREET	Kirton in Lindsey Parish	493548.86	398780.44	14	7013	00192542	01/04/2007 00:00	1	3	BETWEEN 30-50 MPH	BACK OF FOOTPATH	0	POST TOP	BLACK	RIGID COLUMN	URBIS	AXIA 2 S1	MALLATITE	TUBULAR STEEL	6	PAINTED	STEPPED TUBULAR
46101221	QUEEN STREET	Kirton in Lindsey Parish	493541.44	398798.78	15	7014	00192543	01/04/2007 00:00	1	3	BETWEEN 30-50 MPH	BACK OF FOOTPATH	0	POST TOP	BLACK	RIGID COLUMN	URBIS	AXIA 2 S1	MALLATITE	TUBULAR STEEL	6	PAINTED	STEPPED TUBULAR
46101221	QUEEN STREET	Kirton in Lindsey Parish	493515.96	398823.28	16	7015	00192544	01/04/2007 00:00	1	3	BETWEEN 30-50 MPH	BACK OF FOOTPATH	0	POST TOP	BLACK	RIGID COLUMN	URBIS	AXIA 2 S1	MALLATITE	TUBULAR STEEL	6	PAINTED	STEPPED TUBULAR
46101221	QUEEN STREET	Kirton in Lindsey Parish	493481.94	398821.6	17	7016	00192545	01/04/2007 00:00	1	3	BETWEEN 30-50 MPH	BACK OF FOOTPATH	0	POST TOP	BLACK	RIGID COLUMN	URBIS	AXIA 2 S1	MALLATITE	TUBULAR STEEL	6	PAINTED	STEPPED TUBULAR
46101221	QUEEN STREET	Kirton in Lindsey Parish	493465.98	398809.7	18	7017	00192546	01/04/2007 00:00	1	3	BETWEEN 30-50 MPH	BACK OF FOOTPATH	0	POST TOP	BLACK	RIGID COLUMN	URBIS	AXIA 2 S1	MALLATITE	TUBULAR STEEL	6	PAINTED	STEPPED TUBULAR
46101221	QUEEN STREET	Kirton in Lindsey Parish	493763.9	398512.62	2	7001	00192530	01/04/2007 00:00	1	3	BETWEEN 30-50 MPH	BACK OF FOOTPATH	0	POST TOP	BLACK	RIGID COLUMN	URBIS	AXIA 2 S1	MALLATITE	TUBULAR STEEL	6	PAINTED	STEPPED TUBULAR
46101221	QUEEN STREET	Kirton in Lindsey Parish	493740.66	398507.58	3	7002	00192531	01/04/2007 00:00	1	3	BETWEEN 30-50 MPH	BACK OF FOOTPATH	0	POST TOP	BLACK	RIGID COLUMN	URBIS	AXIA 2 S1	MALLATITE	TUBULAR STEEL	6	PAINTED	STEPPED TUBULAR
46101221	QUEEN STREET	Kirton in Lindsey Parish	493717.7	398521.86	4	7003	00192532	01/04/2007 00:00	1	3	BETWEEN 30-50 MPH	BACK OF FOOTPATH	0	POST TOP	BLACK	RIGID COLUMN	URBIS	AXIA 2 S1	MALLATITE	TUBULAR STEEL	6	PAINTED	STEPPED TUBULAR
46101221	QUEEN STREET	Kirton in Lindsey Parish	493695.44	398547.48	5	7004	00192533	01/04/2007 00:00	1	3	BETWEEN 30-50 MPH	BACK OF FOOTPATH	0	POST TOP	BLACK	RIGID COLUMN	URBIS	AXIA 2 S1	MALLATITE	TUBULAR STEEL	6	PAINTED	STEPPED TUBULAR
46101221	QUEEN STREET	Kirton in Lindsey Parish	493678.36	398567.08	6	7005	00192534	01/04/2007 00:00	1	3	BETWEEN 30-50 MPH	BACK OF FOOTPATH	0	POST TOP	BLACK	RIGID COLUMN	URBIS	AXIA 2 S1	MALLATITE	TUBULAR STEEL	6	PAINTED	STEPPED TUBULAR
46101221	QUEEN STREET	Kirton in Lindsey Parish	493667.72	398595.36	7	7006	00192535	01/04/2007 00:00	1	3	BETWEEN 30-50 MPH	BACK OF FOOTPATH	0	POST TOP	BLACK	RIGID COLUMN	URBIS	AXIA 2 S1	MALLATITE	TUBULAR STEEL	6	PAINTED	STEPPED TUBULAR
46101221	QUEEN STREET	Kirton in Lindsey Parish	493646.6	398618.9	8	7007	00192536	01/04/2007 00:00	1	3	BETWEEN 30-50 MPH	BACK OF FOOTPATH	0	POST TOP	BLACK	RIGID COLUMN	URBIS	AXIA 2 S1	MALLATITE	TUBULAR STEEL	6	PAINTED	STEPPED TUBULAR
46101221	QUEEN STREET	Kirton in Lindsey Parish	493624.2	398653.5	9	7008	00192537	01/04/2007 00:00	1	3	BETWEEN 30-50 MPH	BACK OF FOOTPATH	0	POST TOP	BLACK	RIGID COLUMN	URBIS	AXIA 2 S1	MALLATITE	TUBULAR STEEL	6	PAINTED	STEPPED TUBULAR
46101222	QUEEN STREET	Scunthorpe	490137.5	410813.65	1	7000	00192547	01/04/1991 00:00	2	4	LESS THAN 30MPH	BACK OF FOOTPATH	300	SINGLE ARM	NOT APPLICABLE	RIGID COLUMN	URBIS	AXIA 2 S1	PETITJEAN	SHEET STEEL	6	GALVANISED	DAER
46101222	QUEEN STREET	Scunthorpe	490147.68	410843.09	2	7001	00192548	01/04/1991 00:00	2	4	LESS THAN 30MPH	BACK OF FOOTPATH	300	SINGLE ARM	NOT APPLICABLE	RIGID COLUMN	URBIS	AXIA 2 S1	PETITJEAN	SHEET STEEL	6	GALVANISED	DAER
46101222	QUEEN STREET	Scunthorpe	490133.02	410867.22	3	7002	00192549	01/04/1991 00:00	2	4	LESS THAN 30MPH	BACK OF FOOTPATH	300	SINGLE ARM	NOT APPLICABLE	RIGID COLUMN	URBIS	AXIA 2 S1	PETITJEAN	SHEET STEEL	6	GALVANISED	DAER
46101222	QUEEN STREET	Scunthorpe	490130.83	410894.43	4	7003	00192550	01/04/1991 00:00	2	4	LESS THAN 30MPH	BACK OF FOOTPATH	300	SINGLE ARM	NOT APPLICABLE	RIGID COLUMN	URBIS	AXIA 2 S1	PETITJEAN	SHEET

46101243	REDBOURNE ROAD	Redbourne Parish	497639.41	402691.21	3	7002	00192697	01/04/1982 00:00	1	4	LESS THAN 30MPH	ON POLE	300	SINGLE ARM	NOT APPLICABLE	POLE MOUNTED	URBIS	AXIA 2 S1	WOODEN PO	WOOD	8	NOT APPLICABI	Not Applicable	
46101243	REDBOURNE ROAD	Redbourne Parish	497691.62	401986.92	30	7029	00192724	01/04/1982 00:00	1	4	LESS THAN 30MPH	VERGE	1250	SINGLE ARM	NOT APPLICABLE	RIGID COLUMN	URBIS	AXIA 2 S1	PETITJEAN	SHEET STEEL	8	GALVANISED	THAMES	
46101243	REDBOURNE ROAD	Redbourne Parish	497692.6	401947.4	31	7030	00192725	01/04/1982 00:00	1	4	LESS THAN 30MPH	VERGE	1250	SINGLE ARM	MID GREY	RIGID COLUMN	URBIS	AXIA 2 S1	PETITJEAN	SHEET STEEL	8	PAINTED	THAMES	
46101243	REDBOURNE ROAD	Redbourne Parish	497690.69	401909.61	32	7031	00192726	01/04/1982 00:00	1	4	LESS THAN 30MPH	VERGE	1250	SINGLE ARM	MID GREY	RIGID COLUMN	URBIS	AXIA 2 S1	PETITJEAN	SHEET STEEL	8	PAINTED	THAMES	
46101243	REDBOURNE ROAD	Redbourne Parish	497691.29	401877.62	33	7032	00192727	01/04/1982 00:00	1	4	LESS THAN 30MPH	VERGE	1250	SINGLE ARM	MID GREY	RIGID COLUMN	URBIS	AXIA 2 S1	PETITJEAN	SHEET STEEL	8	PAINTED	THAMES	
46101243	REDBOURNE ROAD	Redbourne Parish	497690.38	401840.97	34	7033	00192728	01/04/1982 00:00	1	4	GREATER THAN 50MPH	VERGE	1250	SINGLE ARM	MID GREY	RIGID COLUMN	URBIS	AXIA 2 S1	PETITJEAN	SHEET STEEL	8	PAINTED	THAMES	
46101243	REDBOURNE ROAD	Redbourne Parish	497689.54	401806.16	35	7034	00192729	01/04/1982 00:00	1	4	LESS THAN 30MPH	VERGE	1250	SINGLE ARM	MID GREY	RIGID COLUMN	URBIS	AXIA 2 S1	PETITJEAN	SHEET STEEL	8	PAINTED	THAMES	
46101243	REDBOURNE ROAD	Redbourne Parish	497642.42	402664.78	4	7003	00192698	01/04/1982 00:00	1	4	LESS THAN 30MPH	ON POLE	300	SINGLE ARM	NOT APPLICABLE	POLE MOUNTED	URBIS	AXIA 2 S1	WOODEN PO	WOOD	8	NOT APPLICABI	Not Applicable	
46101243	REDBOURNE ROAD	Redbourne Parish	497646.75	402631.82	5	7004	00192699	01/04/1982 00:00	1	4	LESS THAN 30MPH	ON POLE	300	SINGLE ARM	NOT APPLICABLE	POLE MOUNTED	URBIS	AXIA 2 S1	WOODEN PO	WOOD	8	NOT APPLICABI	Not Applicable	
46101243	REDBOURNE ROAD	Redbourne Parish	497665.34	402603.29	6	7005	00192700	01/04/1982 00:00	1	4	LESS THAN 30MPH	VERGE	1250	SINGLE ARM	MID GREY	RIGID COLUMN	URBIS	AXIA 2 S1	PETITJEAN	SHEET STEEL	8	PAINTED	THAMES	
46101243	REDBOURNE ROAD	Redbourne Parish	497658.4	402580.23	7	7006	00192701	01/04/1982 00:00	1	4	LESS THAN 30MPH	ON POLE	300	SINGLE ARM	NOT APPLICABLE	POLE MOUNTED	URBIS	AXIA 2 S1	WOODEN PO	WOOD	8	NOT APPLICABI	Not Applicable	
46101243	REDBOURNE ROAD	Redbourne Parish	497682.37	402587.22	8	7007	00192702	01/04/1982 00:00	1	4	LESS THAN 30MPH	VERGE	1250	SINGLE ARM	MID GREY	RIGID COLUMN	URBIS	AXIA 2 S1	PETITJEAN	SHEET STEEL	8	PAINTED	THAMES	
46101243	REDBOURNE ROAD	Redbourne Parish	497695.02	402573.9	9	7008	00192703	01/04/1982 00:00	1	4	LESS THAN 30MPH	ON POLE	300	SINGLE ARM	NOT APPLICABLE	POLE MOUNTED	URBIS	AXIA 2 S1	WOODEN PO	WOOD	8	NOT APPLICABI	Not Applicable	
46101244	REDBOURNE STREET	Scunthorpe	490081.36	410814.46	1	7000	00192730	01/04/1993 00:00	2	4	LESS THAN 30MPH	FRONT OF FOOTPATH	0	POST TOP	BLACK	RIGID COLUMN	URBIS	ABBEY	KINGSWOOD	TUBULAR STEEL	5	PAINTED	METRO	
46101244	REDBOURNE STREET	Scunthorpe	490085.12	410834.24	2	7001	00192731	01/04/1993 00:00	2	4	NOT ON A ROAD	OTHER	0	POST TOP	BLACK	RIGID COLUMN	URBIS	ABBEY	KINGSWOOD	TUBULAR STEEL	4	PAINTED	METRO	
46101244	REDBOURNE STREET	Scunthorpe	490083.22	410856.78	3	7002	00192732	01/04/1993 00:00	2	4	NOT ON A ROAD	OTHER	0	POST TOP	BLACK	RIGID COLUMN	URBIS	ABBEY	KINGSWOOD	TUBULAR STEEL	4	PAINTED	METRO	
46101244	REDBOURNE STREET	Scunthorpe	490081.22	410878.22	4	7003	00192733	01/04/1993 00:00	2	4	NOT ON A ROAD	OTHER	0	POST TOP	BLACK	RIGID COLUMN	URBIS	ABBEY	KINGSWOOD	TUBULAR STEEL	4	PAINTED	METRO	
46101244	REDBOURNE STREET	Scunthorpe	490078.95	410898.94	5	7004	00192734	01/04/1993 00:00	2	4	NOT ON A ROAD	OTHER	0	POST TOP	BLACK	RIGID COLUMN	URBIS	ABBEY	KINGSWOOD	TUBULAR STEEL	4	PAINTED	METRO	
46101245	REDWOOD COURT	Bottesford Parish	490585.81	407443.74	1	7000	00192735	01/04/1980 00:00	3	1	LESS THAN 30MPH	VERGE	0	POST TOP	NOT APPLICABLE	RIGID COLUMN	URBIS	AXIA 2 S1	PETITJEAN	SHEET STEEL	5	GALVANISED	NIDD	
46101245	REDWOOD COURT	Bottesford Parish	490598.98	407427.61	2	7001	00192736	01/04/1980 00:00	3	1	LESS THAN 30MPH	VERGE	0	POST TOP	NOT APPLICABLE	RIGID COLUMN	URBIS	AXIA 2 S1	PETITJEAN	SHEET STEEL	5	GALVANISED	NIDD	
46101245	REDWOOD COURT	Bottesford Parish	490611.62	407399.65	3	7002	00192737	01/04/1980 00:00	3	1	LESS THAN 30MPH	VERGE	0	POST TOP	NOT APPLICABLE	RIGID COLUMN	URBIS	AXIA 2 S1	PETITJEAN	SHEET STEEL	5	GALVANISED	NIDD	
46101247	REGINALD ROAD	Scunthorpe	488248.37	412504.37	1	7000	00192738	01/04/2001 00:00	4	4	LESS THAN 30MPH	FRONT OF FOOTPATH	300	SINGLE ARM	NOT APPLICABLE	RIGID COLUMN	URBIS	AXIA 2 S1	MALLATITE	TUBULAR STEEL	6	GALVANISED	STEPPED TUBULAR	
46101247	REGINALD ROAD	Scunthorpe	488282.25	412510.55	1	7001	00192739	01/04/2001 00:00	4	4	LESS THAN 30MPH	BACK OF FOOTPATH	300	SINGLE ARM	NOT APPLICABLE	RIGID COLUMN	URBIS	AXIA 2 S1	MALLATITE	TUBULAR STEEL	6	GALVANISED	STEPPED TUBULAR	
46101247	REGINALD ROAD	Scunthorpe	488482.22	412478.78	10	7012	00192750	01/04/2001 00:00	4	4	LESS THAN 30MPH	BACK OF FOOTPATH	300	SINGLE ARM	NOT APPLICABLE	RIGID COLUMN	URBIS	AXIA 2 S1	MALLATITE	TUBULAR STEEL	6	GALVANISED	STEPPED TUBULAR	
46101247	REGINALD ROAD	Scunthorpe	488511.36	412475.61	11	7013	00192751	01/04/2001 00:00	4	4	LESS THAN 30MPH	BACK OF FOOTPATH	300	SINGLE ARM	NOT APPLICABLE	RIGID COLUMN	URBIS	AXIA 2 S1	MALLATITE	TUBULAR STEEL	6	GALVANISED	STEPPED TUBULAR	
46101247	REGINALD ROAD	Scunthorpe	488541.66	412472.51	12	7014	00192752	01/04/2001 00:00	4	4	LESS THAN 30MPH	BACK OF FOOTPATH	300	SINGLE ARM	NOT APPLICABLE	RIGID COLUMN	URBIS	AXIA 2 S1	MALLATITE	TUBULAR STEEL	6	GALVANISED	STEPPED TUBULAR	
46101247	REGINALD ROAD	Scunthorpe	488573.71	412481.22	13	7015	00192753	01/04/2001 00:00	4	4	LESS THAN 30MPH	BACK OF FOOTPATH	300	SINGLE ARM	NOT APPLICABLE	RIGID COLUMN	URBIS	AXIA 2 S1	MALLATITE	TUBULAR STEEL	6	GALVANISED	STEPPED TUBULAR	
46101247	REGINALD ROAD	Scunthorpe	488602.77	412466.01	14	7016	00192754	01/04/2001 00:00	4	4	LESS THAN 30MPH	BACK OF FOOTPATH	300	SINGLE ARM	NOT APPLICABLE	RIGID COLUMN	URBIS	AXIA 2 S1	MALLATITE	TUBULAR STEEL	6	GALVANISED	STEPPED TUBULAR	
46101247	REGINALD ROAD	Scunthorpe	488634.48	412475.02	15	7017	00192755	01/04/2001 00:00	4	4	LESS THAN 30MPH	BACK OF FOOTPATH	300	SINGLE ARM	NOT APPLICABLE	RIGID COLUMN	URBIS	AXIA 2 S1	MALLATITE	TUBULAR STEEL	6	GALVANISED	STEPPED TUBULAR	
46101247	REGINALD ROAD	Scunthorpe	488663.84	412459.63	16	7018	00192756	01/04/2001 00:00	4	4	LESS THAN 30MPH	BACK OF FOOTPATH	300	SINGLE ARM	NOT APPLICABLE	RIGID COLUMN	URBIS	AXIA 2 S1	MALLATITE	TUBULAR STEEL	6	GALVANISED	STEPPED TUBULAR	
46101247	REGINALD ROAD	Scunthorpe	488694.96	412457.56	17	7019	00192757	01/04/2001 00:00	4	4	LESS THAN 30MPH	BACK OF FOOTPATH	300	SINGLE ARM	NOT APPLICABLE	RIGID COLUMN	URBIS	AXIA 2 S1	MALLATITE	TUBULAR STEEL	6	GALVANISED	STEPPED TUBULAR	
46101247	REGINALD ROAD	Scunthorpe	488727.28	412454.65	18	7020	00192758	01/04/2001 00:00	4	4	LESS THAN 30MPH	BACK OF FOOTPATH	300	SINGLE ARM	NOT APPLICABLE	RIGID COLUMN	URBIS	AXIA 2 S1	MALLATITE	TUBULAR STEEL	6	GALVANISED	STEPPED TUBULAR	
46101247	REGINALD ROAD	Scunthorpe	488756.35	412454.29	19	7021	00192759	01/04/2001 00:00	4	4	LESS THAN 30MPH	BACK OF FOOTPATH	300	SINGLE ARM	NOT APPLICABLE	RIGID COLUMN	URBIS	AXIA 2 S1	MALLATITE	TUBULAR STEEL	6	GALVANISED	STEPPED TUBULAR	
46101247	REGINALD ROAD	Scunthorpe	488309.94	412496.2	2	7003	00192741	01/04/2001 00:00	4	4	LESS THAN 30MPH	BACK OF FOOTPATH	300	SINGLE ARM	NOT APPLICABLE	RIGID COLUMN	URBIS	AXIA 2 S1	MALLATITE	TUBULAR STEEL	6	GALVANISED	STEPPED TUBULAR	
46101247	REGINALD ROAD	Scunthorpe	488223.5	412507	2	7004	00192742	01/04/2016 00:00	4	4	LESS THAN 30MPH	BACK OF FOOTPATH	0	POST TOP	NOT APPLICABLE	RIGID COLUMN	URBIS	AXIA 2 S1	MALLATITE	TUBULAR STEEL	6	GALVANISED	TUBULAR	
46101247	REGINALD ROAD	Scunthorpe	488337.09	412493.52	3	7005	00192743	01/04/2001 00:00	4	4	LESS THAN 30MPH	BACK OF FOOTPATH	300	SINGLE ARM	NOT APPLICABLE	RIGID COLUMN	URBIS	AXIA 2 S1	MALLATITE	TUBULAR STEEL	6	GALVANISED	STEPPED TUBULAR	
46101247	REGINALD ROAD	Scunthorpe	488355.36	412448.33	4	7006	00192744	01/04/2001 00:00	4	4	LESS THAN 30MPH	BACK OF FOOTPATH	300	SINGLE ARM	NOT APPLICABLE	RIGID COLUMN	URBIS	AXIA 2 S1	MALLATITE	TUBULAR STEEL	6	GALVANISED	STEPPED TUBULAR	
46101247	REGINALD ROAD	Scunthorpe	488369.08	412477.28	5	7007	00192745	01/04/2001 00:00	4	4	LESS THAN 30MPH	BACK OF FOOTPATH	300	SINGLE ARM	NOT APPLICABLE	RIGID COLUMN	URBIS	AXIA 2 S1	MALLATITE	TUBULAR STEEL	6	GALVANISED	STEPPED TUBULAR	
46101247	REGINALD ROAD	Scunthorpe	488364.4	412502.39	6	7008	00192746	01/04/2001 00:00	4	4	LESS THAN 30MPH	BACK OF FOOTPATH	300	SINGLE ARM	NOT APPLICABLE	RIGID COLUMN	URBIS	AXIA 2 S1	MALLATITE	TUBULAR STEEL	6	GALVANISED	STEPPED TUBULAR	
46101247	REGINALD ROAD	Scunthorpe	488392.06	412487.5	7	7009	00192747	01/04/2001 00:00	4	4	LESS THAN 30MPH	BACK OF FOOTPATH	300	SINGLE ARM	NOT APPLICABLE	RIGID COLUMN	URBIS	AXIA 2 S1	MALLATITE	TUBULAR STEEL	6	GALVANISED	STEPPED TUBULAR	
46101247	REGINALD ROAD	Scunthorpe	488421.2	412484.76	8	7010	00192748	01/04/2001 00:00	4	4	LESS THAN 30MPH	BACK OF FOOTPATH	300	SINGLE ARM	NOT APPLICABLE	RIGID COLUMN	URBIS	AXIA 2 S1	MALLATITE	TUBULAR STEEL	6	GALVANISED	STEPPED TUBULAR	
46101247	REGINALD ROAD	Scunthorpe	488451.95	412481.83	9	7011	00192749	01/04/2001 00:00	4	4	LESS THAN 30MPH	BACK OF FOOTPATH	300	SINGLE ARM	NOT APPLICABLE	RIGID COLUMN	URBIS	AXIA 2 S1	MALLATITE	TUBULAR STEEL	6	GALVANISED	STEPPED TUBULAR	
46101248	REPTON DRIVE	Bottesford Parish	489991.14	407287.93	1	7000	00192760	14/06/2019 00:00	3	1	LESS THAN 30MPH	BACK OF FOOTPATH	0	POST TOP	NOT APPLICABLE	RIGID COLUMN	URBIS	AXIA 2 S1	MALLATITE	TUBULAR STEEL	6	GALVANISED	TUBULAR	
46101248	REPTON DRIVE	Bottesford Parish	489977.16	407260.78	2	7001	00192761	14/06/2019 00:00	3	1	LESS THAN 30MPH	VERGE	0	POST TOP	NOT APPLICABLE	RIGID COLUMN	URBIS	AXIA 2 S1	MALLATITE	TUBULAR STEEL	6	GALVANISED	TUBULAR	
46101250	REVESBY COURT	Scunthorpe	489468.81	409549.48	1	7000	00192762	24/03/2020 00:00	2	4	LESS THAN 30MPH	BACK OF FOOTPATH	0	POST TOP	NOT APPLICABLE	RIGID COLUMN	URBIS	AXIA 2 S1	MALLATITE	TUBULAR STEEL	6	GALVANISED	TUBULAR	
46101250	REVESBY COURT	Scunthorpe	489444.39	409545.48	2	7001	00192763	28/04/2017 00:00	2	4	LESS THAN 30MPH	FRONT OF FOOTPATH	0	POST TOP	NOT APPLICABLE	RIGID COLUMN	URBIS	AXIA 2 S1	VALMONT ST	TUBULAR STEEL	6	GALVANISED	TUBULAR	
46101250	REVESBY COURT	Scunthorpe	489413.4	409541.28	3	7002	00192764	24/03/2020 00:00	2	4	LESS THAN 30MPH	VERGE	0	POST TOP	NOT APPLICABLE	RIGID COLUMN	URBIS	AXIA 2 S1	MALLATITE	TUBULAR STEEL	6	GALVANISED	TUBULAR	
46101250	REVESBY COURT	Scunthorpe	489385.57	409537.87	4	7003	00192765	24/03/2020 00:00	2	4	LESS THAN 30MPH	VERGE	0	POST TOP	NOT APPLICABLE	RIGID COLUMN	URBIS	AXIA 2 S1	MALLATITE	TUBULAR STEEL	6	GALVANISED	TUBULAR	
46101251	RIBY ROAD	Scunthorpe	488250.95	408336.38	1	7000	00192766	17/12/2020 00:00	3	4	LESS THAN 30MPH	BACK OF FOOTPATH	0	POST TOP	NOT APPLICABLE	RIGID COLUMN	URBIS	AXIA 2 S1	MALLATITE	TUBULAR STEEL	6	GALVANISED	TUBULAR	
46101251	RIBY ROAD	Scunthorpe	488266.83	408303.39	2	7001	00192767	17/12/2020 00:00	3	4	LESS THAN 30MPH	BACK OF FOOTPATH	0	POST TOP	NOT APPLICABLE	RIGID COLUMN	URBIS	AXIA 2 S1	MALLATITE	TUBULAR STEEL	6	GALVANISED	TUBULAR	
46101252	RICHDALE AVENUE	Kirton in Lindsey Parish	493276.71	399141.61	1	7000	00192768	26/02/2021 00:00	1	3	LESS THAN 30MPH	VERGE	0	POST TOP	NOT APPLICABLE	RIGID COLUMN	URBIS	AXIA 2 S1	MALLATITE	TUBULAR STEEL	6	GALVANISED	TUBULAR	
46101252	RICHDALE AVENUE	Kirton in Lindsey Parish	493157.07	398886.54	10	7009	00192777	14/01/2019 00:00	1	3	LESS THAN 30MPH	BACK OF FOOTPATH	0	POST TOP	NOT APPLICABLE	RIGID COLUMN	URBIS	AXIA 2 S1	MALLATITE	TUBULAR STEEL	6	GALVANISED	TUBULAR	
46101252	RICHDALE AVENUE	Kirton in Lindsey Parish	493164	398857	11	7010	04200168	01/04/2010 00:00	1	3	LESS THAN 30MPH	BACK OF FOOTPATH	0	POST TOP	NOT APPLICABLE	RIGID COLUMN	URBIS	AXIA 2 S1	MALLATITE	TUBULAR STEEL	5	GALVANISED	TUBULAR	
46101252	RICHDALE AVENUE	Kirton in Lindsey Parish	493240.75	399138.39	2	7001	00192769	14/01/2019 00:00	1	3	LESS THAN 30MPH	BACK OF FOOTPATH	0	POST TOP	NOT APPLICABLE	RIGID COLUMN	URBIS	AXIA 2 S1	MALLATITE	TUBULAR STEEL	6	GALVANISED	TUBULAR	
46101252	RICHDALE AVENUE	Kirton in Lindsey Parish	493220.18	399105.11	3	7002	00192770	01/04/1980 00:00	1	3	LESS THAN 30MPH	VERGE	0	POST TOP	LIGHT GREY	RIGID COLUMN	URBIS	AXIA 2 S1	PETITJEAN	SHEET STEEL	5	PAINTED	NIDD	
46101252	RICHDALE AVENUE	Kirton in Lindsey Parish	493201.7	399076.1	4	7003	00192771	14/01/2019 00:00	1	3	LESS THAN 30MPH	VERGE	0	POST TOP	NOT APPLICABLE	RIGID COLUMN	URBIS	AXIA 2 S1	MALLATITE	TUBULAR STEEL	6	GALVANISED	TUBULAR	
46101252	RICHDALE AVENUE	Kirton in Lindsey Parish	493192.64	399048.41	5	7004	00192772	14/01/2019 00:00	1	3	LESS THAN 30MPH	VERGE	0	POST TOP	NOT APPLICABLE	RIGID COLUMN	URBIS	AXIA 2 S1	MALLATITE	TUBULAR STEEL	6	GALVANISED	TUBULAR	
46101252	RICHDALE AVENUE	Kirton in Lindsey Parish	493181.59	399016.14	6	7005	00192773	14/01/2019 00:00	1	3	LESS THAN 30MPH	VERGE	0	POST TOP	NOT APPLICABLE	RIGID COLUMN	URBIS	AXIA 2 S1	MALLATITE	TUBULAR STEEL	6	GALVANISED	TUBULAR	
46101252	RICHDALE AVENUE	Kirton in Lindsey Parish	493181.17	398987.88	7	7006	00192774	01/04/2001 00:00	1	3	LESS THAN 30MPH	BACK OF FOOTPATH	0	POST TOP	LIGHT GREY	RIGID COLUMN	URBIS	AXIA 2 S1	MALLATITE	TUBULAR STEEL	6	PAINTED	STEPPED TUBULAR	
46101252	RICHDALE AVENUE	Kirton in Lindsey Parish	493161.48	398954.78	8	7007	00192775	14/01/2019 00:00	1	3	LESS THAN 30MPH	VERGE	0	POST TOP	NOT APPLICABLE	RIGID COLUMN	URBIS	AXIA 2 S1	MALLATITE	TUBULAR STEEL	6	GALVANISED	TUBULAR	
46101252	RICHDALE AVENUE	Kirton in Lindsey Parish	493160.1	398918.56	9	7008	00192776	14/01/2019 00:00	1	3	LESS THAN 30MPH	VERGE	0	POST TOP	NOT APPLICABLE	RIGID COLUMN	URBIS	AXIA 2 S1	MALLATITE	TUBULAR STEEL	6	GALVANISED	TUBULAR	
46101253	RICHMOND DRIVE	Bottesford Parish	490446.5	407553.21	1	7000	00192778	01/04/1980 00:00	3	1	LESS THAN 30MPH	BACK OF FOOTPATH	0	POST TOP	NOT APPLICABLE	RIGID COLUMN	URBIS	AXIA 2 S1	PETITJEAN	SHEET STEEL	5	GALVANISED	NIDD	
46101253	RICHMOND DRIVE	Bottesford Parish	490426.67	407579.88	2	7001	00192779	01/04/1980 00:00	3	1	LESS THAN 30MPH	BACK OF FOOTPATH	0	POST TOP	NOT APPLICABLE	RIGID COLUMN	URBIS	AXIA 2 S1	PETITJEAN	SHEET STEEL	5	GALVANISED	NIDD	
46101253	RICHMOND DRIVE	Bottesford Parish	490409.53	407603.26	3	7002	00192780	01/04/1980 00:00	3	1	LESS THAN 30MPH	BACK OF FOOTPATH	0	POST TOP	NOT APPLICABLE	RIGID COLUMN	URBIS	AXIA 2 S1	PETITJEAN	SHEET STEEL	5	GALVANISED	NIDD	
46101253	RICHMOND DRIVE	Bottesford Parish	490394.27	407630.71	4	7003	00192781	01/04/1980 00:00	3	1	LESS THAN 30MPH	BACK OF FOOTPATH	0	POST TOP	NOT APPLICABLE	RIGID COLUMN	URBIS	AXIA 2 S1	PETITJEAN	SHEET STEEL	5	GALVANISED	NIDD	
46101253	RICHMOND DRIVE	Bottesford Parish	490384.59	407663.23	5	7004	00192782	01/04/1980 00:00	3	1	LESS THAN 30MPH	BACK OF FOOTPATH	0	POST TOP	NOT APPLICABLE	RIGID COLUMN	URBIS	AXIA 2 S1	PETITJEAN	SHEET STEEL	5	GALVANISED	NIDD	
46101254	RIDGE VIEW	Brigg Parish	500936.63	407719.67	1	7000	00192783	01/04/1980 00:00	2	3	LESS THAN 30MPH	BACK OF FOOTPATH	0	POST TOP	LIGHT GREY	RIGID COLUMN	URBIS	AXIA 2 S1	PETITJEAN	SHEET STEEL	5	PAINTED	NIDD	
46101254	RIDGE VIEW	Brigg Parish	500964.32	407726.4	2	7001	00192784	01/04/1980 00:00	2	3	LESS THAN 30MPH	BACK OF FOOTPATH	0	POST TOP	LIGHT GREY	RIGID COLUMN	URBIS	AXIA 2 S1	PETITJEAN	SHEET STEEL	5	PAINTED	NIDD	
46101255	RILESTON PLACE	Bottesford Parish	489604.11	406872.64	1	7000	00192785	01/04/1980 00:00	3	1	LESS THAN 30MPH	BACK OF FOOTPATH	0	POST TOP	NOT APPLICABLE	RIGID COLUMN	URBIS	AXIA 2 S1	PETITJEAN	SHEET STEEL	5	GALVANISED	NIDD	
46101255	RILESTON PLACE	Bottesford Parish	489606.16	406902.36	2	7003	00192788	01/04/1980 00:00	3	1	LESS THAN 30MPH	BACK OF FOOTPATH	0	POST TOP	NOT APPLICABLE	RIGID COLUMN	URBIS	AXIA 2 S1	PETITJEAN	SHEET STEEL	5	GALVANISED	NIDD	
46101255	RILESTON PLACE	Bottesford Parish	489588.81	406897.34	3	7004	00192789	01/04/1980 00:00	3	1	LESS THAN 30MPH	BACK OF FOOTPATH	0	POST TOP	NOT APPLICABLE	RIGID COLUMN	URBIS	AXIA 2 S1	PETITJEAN	SHEET STEEL	5	GALVANISED	NIDD	
46101255	RILESTON PLACE	Bottesford Parish	489551.94	406907.23	4	7005	00192790	01/04/1980 00:00	3	1	LESS THAN 30MPH	BACK OF FOOTPATH	0	POST TOP	NOT APPLICABLE	RIGID COLUMN	URBIS	AXIA 2 S1	PETITJEAN	SHEET STEEL	5	GALVANISED	NIDD	
46101255	RILESTON PLACE	Bottesford Parish	489524.52	406907.5	5	7006	00192791	01/04/1980 00:00	3	1	LESS THAN 30MPH	BACK OF FOOTPATH	0	POST TOP	NOT APPLICABLE	RIGID COLUMN	URBIS	AXIA 2 S1	PETITJEAN	SHEET STEEL	5	GALVANISED	NIDD	
46101257	RIVELIN CRESCENT	Scunthorpe	489350.8	409634.68	1	7000	00192796	01/04/1991 00:00	2	4	LESS THAN 30MPH	VERGE	0	POST TOP	NOT APPLICABLE	RIGID COLUMN	URBIS	AXIA 2 S1	PETITJEAN	SHEET STEEL	5	GALVANISED	NIDD	
46101257	RIVELIN CRESCENT	Scunthorpe	489351.07	409664.11	2	7001	00192797	01/04/1991 00:00	2	4	LESS THAN 30MPH	VERGE	0	POST TOP	NOT APPLICABLE	RIGID COLUMN	URBIS	AXIA 2 S1	PETITJEAN	SHEET STEEL	5	GALVANISED	NIDD	
46101257	RIVELIN CRESCENT	Scunthorpe	489347.32	409695.04	3	7002	00192798	01/04/1991 00:00	2	4	LESS THAN 30MPH	VERGE	0	POST TOP	NOT APPLICABLE	RIGID COLUMN	URBIS	AXIA 2 S1	PETITJEAN	SHEET STEEL	5	GALVANISED	NIDD	
46101257	RIVELIN CRESCENT	Scunthorpe	489371.96	409706.11	4	7003	00192799	01/04/1973 00:00	2	4	LESS THAN 30MPH	VERGE	300	SINGLE ARM	BLACK	RIGID COLUMN	URBIS	AXIA 2 S1	VICT	CAST IRON	3	PAINTED	GASCON	
46101258	RIVELIN PLACE	Scunthorpe	489192.05	409487.03	1	7000	00192800	01/04/1995 00:00	2	4	LESS THAN 30MPH	BACK OF FOOTPATH	0	POST TOP	NOT APPLICABLE	RIGID COLUMN	URBIS	AXIA 2 S1	PETITJEAN	SHEET STEEL	5	GALVANISED	NIDD	
46101258	RIVELIN PLACE	Scunthorpe	489181.35	409512.48	2	7001	00192801	01/04/1995 00:00	2	4	LESS THAN 30MPH	BACK OF FOOTPATH	0	POST TOP	NOT APPLICABLE	RIGID COLUMN	URBIS	AXIA 2 S1	PETITJEAN	SHEET STEEL	5	GALVANISED	NIDD	
46101259	RIVELIN ROAD	Scunthorpe	489307.08	409462.61	1	7000	00192804	01/04/1993 00:00	2	4	LESS THAN 30MPH	BACK OF FOOTPATH	800	SINGLE ARM	NOT APPLICABLE	RIGID COLUMN	URBIS	AXIA 2 S1	PETITJEAN	SHEET STEEL	6	GALVANISED	DAER	
46101259	RIVELIN ROAD	Scunthorpe	489278.53	409468.73	2	7001	00192805	01/04/1993 00:00	2	4	LESS THAN 30MPH	BACK OF FOOTPATH	800	SINGLE ARM	NOT APPLICABLE	RIGID COLUMN	URBIS	AXIA 2 S1	PETITJEAN	SHEET STEEL	6	GALVANISED	DAER	
46101259	RIVELIN ROAD	Scunthorpe	489248.73	409458.67	3	7002	00192806	01/04/1993 00:00	2	4	LESS THAN 30MPH	BACK OF FOOTPATH	800	SINGLE ARM	NOT APPLICABLE	RIGID COLUMN	URBIS	AXIA 2 S1	PETITJEAN	SHEET STEEL	6	GALVANISED	DAER	
46101259	RIVELIN ROAD	Scunthorpe	489216.83	409464.56	4	7003	00192807	01/04/1993 00:00	2	4	LESS THAN 30MPH	BACK OF FOOTPATH	800	SINGLE ARM	NOT APPLICABLE	RIGID COLUMN	URBIS	AXIA 2 S1	PETITJEAN	SHEET STEEL	6	GALVANISED	DAER	
46101259	RIVELIN ROAD	Scunthorpe	489198.4	409463.2	5	7004	00192808	01/04/1993 00:00	2	4	LESS THAN 30MPH	BACK OF FOOTPATH	800	SINGLE ARM	NOT APPLICABLE	RIGID COLUMN	URBIS	AXIA 2 S1	PETITJEAN	SHEET STEEL	6	GALVANISED	DAER	
46101259	RIVELIN ROAD	Scunthorpe	489171.33	409451.78	6	7005	00192809	01/04/1993 00:00	2	4	LESS THAN 30MPH	BACK OF FOOTPATH	800	SINGLE ARM	NOT APPLICABLE	RIGID COLUMN	URBIS	AXIA 2 S1	PETITJEAN	SHEET STEEL	6	GALVANISED	DAER	
46101259	RIVELIN ROAD	Scunthorpe	489143.92	409454.71	7	7006	00192810	01/04/1993 00:00	2	4	LESS THAN 30MPH	BACK OF FOOTPATH	800	SINGLE ARM	NOT APPLICABLE	RIGID COLUMN	URBIS	AXIA 2 S1	PETITJEAN	SHEET STEEL	6	GALVANISED	DAER	
46101259	RIVELIN ROAD	Scunthorpe	489123.55	409449.75	8	7007	00192811	28/04/2017 00:00	2	4	LESS THAN 30MPH	BACK OF FOOTPATH	0	POST TOP	NOT APPLICABLE	RIGID COLUMN	URBI

46101297	SAXBY ROAD	Scunthorpe	488150.38	408400.74	4	7003	00192979	01/04/1980 00:00	3	4	LESS THAN 30MPH	BACK OF FOOTPATH	300	SINGLE ARM	NOT APPLICABLE	RIGID COLUMN	URBIS	AXIA 2 S1	PETITJEAN	SHEET STEEL	5	GALVANISED	DAER	
46101297	SAXBY ROAD	Scunthorpe	488176.38	408415.91	5	7004	00192980	01/04/1980 00:00	3	4	LESS THAN 30MPH	BACK OF FOOTPATH	300	SINGLE ARM	NOT APPLICABLE	RIGID COLUMN	URBIS	AXIA 2 S1	PETITJEAN	SHEET STEEL	5	GALVANISED	DAER	
46101297	SAXBY ROAD	Scunthorpe	488117.9	408410.94	6	7005	00192981	01/04/1980 00:00	3	4	NOT ON A ROAD	BACK OF FOOTPATH	300	SINGLE ARM	NOT APPLICABLE	RIGID COLUMN	URBIS	AXIA 2 S1	PETITJEAN	SHEET STEEL	5	GALVANISED	DAER	
46101298	SAXON CLOSE	Barton upon Humber Parish	503683.61	421965.9	1	7000	00192982	12/06/2019 00:00	5	2	LESS THAN 30MPH	FRONT OF FOOTPATH	0	POST TOP	NOT APPLICABLE	RIGID COLUMN	URBIS	AXIA 2 S1	MALLATITE	TUBULAR STEEL	6	GALVANISED	TUBULAR	
46101298	SAXON CLOSE	Barton upon Humber Parish	503675.92	421927.47	2	7001	00192983	21/04/2022 00:00	5	2	LESS THAN 30MPH	BACK OF FOOTPATH	0	POST TOP	NOT APPLICABLE	RIGID COLUMN	URBIS	AXIA 2 S1	MALLATITE	TUBULAR STEEL	6	GALVANISED	TUBULAR	
46101298	SAXON CLOSE	Barton upon Humber Parish	503644.61	421925.7	3	7002	00192984	12/06/2019 00:00	5	2	LESS THAN 30MPH	FRONT OF FOOTPATH	0	POST TOP	NOT APPLICABLE	RIGID COLUMN	URBIS	AXIA 2 S1	MALLATITE	TUBULAR STEEL	6	GALVANISED	TUBULAR	
46101298	SAXON CLOSE	Barton upon Humber Parish	503616.79	421925.02	4	7003	00192985	01/04/2008 00:00	5	2	LESS THAN 30MPH	FRONT OF FOOTPATH	0	POST TOP	NOT APPLICABLE	RIGID COLUMN	URBIS	AXIA 2 S1	BRITISH STEE	TUBULAR STEEL	6	GALVANISED	ASH	
46101298	SAXON CLOSE	Barton upon Humber Parish	503582.21	421929.02	5	7004	00192986	01/04/2008 00:00	5	2	LESS THAN 30MPH	FRONT OF FOOTPATH	0	POST TOP	NOT APPLICABLE	RIGID COLUMN	URBIS	AXIA 2 S1	BRITISH STEE	TUBULAR STEEL	6	GALVANISED	ASH	
46101299	SAXON COURT	Bottesford Parish	489609.03	407350.08	1	7000	00192987	26/09/2019 00:00	3	1	LESS THAN 30MPH	VERGE	0	POST TOP	NOT APPLICABLE	RIGID COLUMN	URBIS	AXIA 2 S1	MALLATITE	TUBULAR STEEL	6	GALVANISED	TUBULAR	
46101299	SAXON COURT	Bottesford Parish	489624.06	407578.16	10	7009	00192996	02/07/2018 00:00	3	1	LESS THAN 30MPH	VERGE	0	POST TOP	NOT APPLICABLE	RIGID COLUMN	URBIS	AXIA 2 S1	VALMONT ST	TUBULAR STEEL	6	GALVANISED	TUBULAR	
46101299	SAXON COURT	Bottesford Parish	489622.72	407601.81	11	7010	00192997	01/04/1986 00:00	3	1	LESS THAN 30MPH	VERGE	0	POST TOP	NOT APPLICABLE	RIGID COLUMN	URBIS	AXIA 2 S1	PETITJEAN	SHEET STEEL	5	GALVANISED	NIDD	
46101299	SAXON COURT	Bottesford Parish	489656.32	407603.69	12	7011	00192998	01/04/1986 00:00	3	1	LESS THAN 30MPH	VERGE	0	POST TOP	NOT APPLICABLE	RIGID COLUMN	URBIS	AXIA 2 S1	PETITJEAN	SHEET STEEL	5	GALVANISED	NIDD	
46101299	SAXON COURT	Bottesford Parish	489652.76	407366.08	2	7001	00192988	26/09/2019 00:00	3	1	LESS THAN 30MPH	BACK OF FOOTPATH	0	POST TOP	NOT APPLICABLE	RIGID COLUMN	URBIS	AXIA 2 S1	MALLATITE	TUBULAR STEEL	6	GALVANISED	TUBULAR	
46101299	SAXON COURT	Bottesford Parish	489648.48	407393.11	3	7002	00192989	26/09/2019 00:00	3	1	LESS THAN 30MPH	BACK OF FOOTPATH	0	POST TOP	NOT APPLICABLE	RIGID COLUMN	URBIS	AXIA 2 S1	MALLATITE	TUBULAR STEEL	6	GALVANISED	TUBULAR	
46101299	SAXON COURT	Bottesford Parish	489629.18	407421.83	4	7003	00192990	26/09/2019 00:00	3	1	LESS THAN 30MPH	BACK OF FOOTPATH	0	POST TOP	NOT APPLICABLE	RIGID COLUMN	URBIS	AXIA 2 S1	MALLATITE	TUBULAR STEEL	6	GALVANISED	TUBULAR	
46101299	SAXON COURT	Bottesford Parish	489626.5	407450.31	5	7004	00192991	26/09/2019 00:00	3	1	LESS THAN 30MPH	BACK OF FOOTPATH	0	POST TOP	NOT APPLICABLE	RIGID COLUMN	URBIS	AXIA 2 S1	MALLATITE	TUBULAR STEEL	6	GALVANISED	TUBULAR	
46101299	SAXON COURT	Bottesford Parish	489610.05	407469.67	6	7005	00192992	01/04/2005 00:00	3	1	LESS THAN 30MPH	BACK OF FOOTPATH	0	POST TOP	NOT APPLICABLE	RIGID COLUMN	URBIS	AXIA 2 S1	MALLATITE	TUBULAR STEEL	6	GALVANISED	TUBULAR	
46101299	SAXON COURT	Bottesford Parish	489603.47	407497.35	7	7006	00192993	01/04/1980 00:00	3	1	LESS THAN 30MPH	BACK OF FOOTPATH	0	POST TOP	NOT APPLICABLE	RIGID COLUMN	URBIS	AXIA 2 S1	PETITJEAN	SHEET STEEL	5	GALVANISED	NIDD	
46101299	SAXON COURT	Bottesford Parish	489615.55	407522.91	8	7007	00192994	01/04/1980 00:00	3	1	LESS THAN 30MPH	BACK OF FOOTPATH	0	POST TOP	NOT APPLICABLE	RIGID COLUMN	URBIS	AXIA 2 S1	PETITJEAN	SHEET STEEL	5	GALVANISED	NIDD	
46101299	SAXON COURT	Bottesford Parish	489630.05	407541.37	9	7008	00192995	01/04/1985 00:00	3	1	LESS THAN 30MPH	VERGE	0	POST TOP	NOT APPLICABLE	RIGID COLUMN	URBIS	AXIA 2 S1	PETITJEAN	SHEET STEEL	5	GALVANISED	NIDD	
46101301	SCAWBY ROAD	Broughton Parish	496173.91	408669.42	1	7002	00193003	01/04/2010 00:00	1	1	LESS THAN 30MPH	BACK OF FOOTPATH	0	POST TOP	NOT APPLICABLE	RIGID COLUMN	URBIS	AXIA 2 S1	VALMONT ST	TUBULAR STEEL	6	GALVANISED	TUBULAR	
46101301	SCAWBY ROAD	Broughton Parish	496376.46	406647.54	1	7001	00193002	07/10/2019 00:00	1	1	GREATER THAN 50MPH	CENTRAL RESERVATION	1000	DOUBLE ARM	NOT APPLICABLE	RIGID COLUMN	HOLOPHANE	VMAX V2 L044 LED	MALLATITE	TUBULAR STEEL	8	GALVANISED	TUBULAR	
46101301	SCAWBY ROAD	Broughton Parish	496374.74	406624.68	1	7000	00193001	01/04/2010 00:00	1	1	GREATER THAN 50MPH	BACK OF FOOTPATH	0	POST TOP	NOT APPLICABLE	RIGID COLUMN	PHILIPS	UNISTREET 7 KLM	MALLATITE	TUBULAR STEEL	6	GALVANISED	TUBULAR	
46101301	SCAWBY ROAD	Broughton Parish	496177.93	408635.69	2	7003	00193004	04/12/2018 00:00	1	1	LESS THAN 30MPH	ON POLE	300	SINGLE ARM	DARK GREY	POLE MOUNTED	URBIS	AXIA 2 S1	WOODEN PO	WOOD	5	PAINTED	PUDSEY DIAMOND	
46101301	SCAWBY ROAD	Broughton Parish	496184.68	408606.31	3	7004	00193005	04/12/2018 00:00	1	1	LESS THAN 30MPH	ON POLE	300	SINGLE ARM	DARK GREY	POLE MOUNTED	URBIS	AXIA 2 S1	WOODEN PO	WOOD	5	PAINTED	PUDSEY DIAMOND	
46101301	SCAWBY ROAD	Broughton Parish	496194.88	408567.92	4	7005	00193006	04/12/2018 00:00	1	1	LESS THAN 30MPH	ON POLE	300	SINGLE ARM	DARK GREY	POLE MOUNTED	URBIS	AXIA 2 S1	WOODEN PO	WOOD	5	PAINTED	PUDSEY DIAMOND	
46101301	SCAWBY ROAD	Broughton Parish	496207.71	408518.37	5	7006	00193007	04/12/2018 00:00	1	1	LESS THAN 30MPH	ON POLE	300	SINGLE ARM	DARK GREY	POLE MOUNTED	URBIS	AXIA 2 S1	WOODEN PO	WOOD	5	PAINTED	PUDSEY DIAMOND	
46101301	SCAWBY ROAD	Broughton Parish	496213	408496.63	6	7007	00193008	04/12/2018 00:00	1	1	LESS THAN 30MPH	ON POLE	300	SINGLE ARM	DARK GREY	POLE MOUNTED	URBIS	AXIA 2 S1	WOODEN PO	WOOD	5	PAINTED	PUDSEY DIAMOND	
46101301	SCAWBY ROAD	Broughton Parish	496224.61	408449.63	7	7008	00193009	26/03/2018 00:00	1	1	LESS THAN 30MPH	VERGE	0	POST TOP	NOT APPLICABLE	RIGID COLUMN	URBIS	AXIA 2 S1	VALMONT ST	TUBULAR STEEL	6	GALVANISED	TUBULAR	
46101301	SCAWBY ROAD	Broughton Parish	496234.39	408407.74	8	7009	00193010	04/04/2019 00:00	1	1	LESS THAN 30MPH	BACK OF FOOTPATH	0	POST TOP	NOT APPLICABLE	RIGID COLUMN	URBIS	AXIA 2 S1	MALLATITE	TUBULAR STEEL	6	GALVANISED	TUBULAR	
46101301	SCAWBY ROAD	Broughton Parish	496244.86	408364.67	9	7010	00193011	04/04/2019 00:00	1	1	LESS THAN 30MPH	BACK OF FOOTPATH	0	POST TOP	NOT APPLICABLE	RIGID COLUMN	URBIS	AXIA 2 S1	MALLATITE	TUBULAR STEEL	6	GALVANISED	TUBULAR	
46101302	SCAWBY ROAD	Scunthorpe	488297.22	408102.12	1	7000	00193012	18/12/2020 00:00	3	4	LESS THAN 30MPH	BACK OF FOOTPATH	0	POST TOP	NOT APPLICABLE	RIGID COLUMN	URBIS	AXIA 2 S1	MALLATITE	TUBULAR STEEL	6	GALVANISED	TUBULAR	
46101302	SCAWBY ROAD	Scunthorpe	488331.94	408108.51	2	7001	00193013	18/12/2020 00:00	3	4	LESS THAN 30MPH	BACK OF FOOTPATH	0	POST TOP	NOT APPLICABLE	RIGID COLUMN	URBIS	AXIA 2 S1	MALLATITE	TUBULAR STEEL	6	GALVANISED	TUBULAR	
46101302	SCAWBY ROAD	Scunthorpe	488358.54	408125.36	3	7002	00193014	18/12/2020 00:00	3	4	LESS THAN 30MPH	BACK OF FOOTPATH	0	POST TOP	NOT APPLICABLE	RIGID COLUMN	URBIS	AXIA 2 S1	MALLATITE	TUBULAR STEEL	6	GALVANISED	TUBULAR	
46101302	SCAWBY ROAD	Scunthorpe	488389.1	408129.36	4	7003	00193015	18/12/2020 00:00	3	4	LESS THAN 30MPH	BACK OF FOOTPATH	0	POST TOP	NOT APPLICABLE	RIGID COLUMN	URBIS	AXIA 2 S1	MALLATITE	TUBULAR STEEL	6	GALVANISED	TUBULAR	
46101303	SCHOOL DRIVE	Messingham Parish	489575.03	404448.37	1	7000	00193016	11/04/2019 00:00	4	1	LESS THAN 30MPH	BACK OF FOOTPATH	0	POST TOP	NOT APPLICABLE	RIGID COLUMN	URBIS	AXIA 2 S1	MALLATITE	TUBULAR STEEL	6	GALVANISED	TUBULAR	
46101303	SCHOOL DRIVE	Messingham Parish	489568.91	404405.76	2	7001	00193017	11/04/2019 00:00	4	1	LESS THAN 30MPH	BACK OF FOOTPATH	0	POST TOP	NOT APPLICABLE	RIGID COLUMN	URBIS	AXIA 2 S1	MALLATITE	TUBULAR STEEL	6	GALVANISED	TUBULAR	
46101303	SCHOOL DRIVE	Messingham Parish	489573.83	404368.17	3	7002	00193018	01/04/1980 00:00	4	1	LESS THAN 30MPH	BACK OF FOOTPATH	0	POST TOP	NOT APPLICABLE	RIGID COLUMN	URBIS	AXIA 2 S1	MALLATITE	TUBULAR STEEL	5	GALVANISED	STEPPED TUBULAR	
46101303	SCHOOL DRIVE	Messingham Parish	489562.54	404344.51	4	7003	00193019	01/04/1980 00:00	4	1	LESS THAN 30MPH	BACK OF FOOTPATH	0	POST TOP	MID GREY	RIGID COLUMN	URBIS	AXIA 2 S1	PETITJEAN	SHEET STEEL	5	PAINTED	NIDD	
46101304	SCHOOL HOUSES	Broughton Parish	496351.15	409289.13	1	7000	00193020	01/04/1991 00:00	1	1	LESS THAN 30MPH	VERGE	0	POST TOP	NOT APPLICABLE	RIGID COLUMN	URBIS	AXIA 2 S1	PETITJEAN	SHEET STEEL	5	GALVANISED	NIDD	
46101304	SCHOOL HOUSES	Broughton Parish	496336.58	409321.68	2	7001	00193021	01/04/1988 00:00	1	1	LESS THAN 30MPH	VERGE	0	POST TOP	NOT APPLICABLE	RIGID COLUMN	URBIS	AXIA 2 S1	PETITJEAN	SHEET STEEL	5	GALVANISED	NIDD	
46101304	SCHOOL HOUSES	Broughton Parish	496326.07	409344.92	3	7002	00193022	01/04/1988 00:00	1	1	LESS THAN 30MPH	VERGE	0	POST TOP	NOT APPLICABLE	RIGID COLUMN	URBIS	AXIA 2 S1	PETITJEAN	SHEET STEEL	5	GALVANISED	NIDD	
46101304	SCHOOL HOUSES	Broughton Parish	496317.03	409361.74	4	7003	00193023	01/04/1993 00:00	1	1	LESS THAN 30MPH	VERGE	300	SINGLE ARM	NOT APPLICABLE	RIGID COLUMN	URBIS	AXIA 2 S1	PETITJEAN	SHEET STEEL	5	GALVANISED	DAER	
46101305	SCHOOL LANE	Appleby Parish	495124.34	414771.09	1	7000	00193024	01/04/2015 00:00	1	2	LESS THAN 30MPH	ON POLE	500	SINGLE ARM	NOT APPLICABLE	POLE MOUNTED	URBIS	AXIA 2 S1	WOODEN PO	WOOD	5	NOT APPLICABI	Not Applicable	
46101305	SCHOOL LANE	Appleby Parish	495495.58	414832.07	10	7009	00193033	17/02/2021 00:00	1	2	LESS THAN 30MPH	VERGE	0	POST TOP	NOT APPLICABLE	RIGID COLUMN	URBIS	AXIA 2 S1	MALLATITE	TUBULAR STEEL	6	GALVANISED	TUBULAR	
46101305	SCHOOL LANE	Appleby Parish	495171.02	414773.14	2	7001	00193025	01/04/2015 00:00	1	2	LESS THAN 30MPH	ON POLE	500	SINGLE ARM	NOT APPLICABLE	POLE MOUNTED	URBIS	AXIA 2 S1	WOODEN PO	WOOD	5	NOT APPLICABI	Not Applicable	
46101305	SCHOOL LANE	Appleby Parish	495216.35	414787.8	3	7002	00193026	01/04/2014 00:00	1	2	LESS THAN 30MPH	ON POLE	500	SINGLE ARM	NOT APPLICABLE	POLE MOUNTED	URBIS	AXIA 2 S1	WOODEN PO	WOOD	5	NOT APPLICABI	Not Applicable	
46101305	SCHOOL LANE	Appleby Parish	495264.66	414792.59	4	7003	00193027	01/04/2014 00:00	1	2	LESS THAN 30MPH	ON POLE	500	SINGLE ARM	NOT APPLICABLE	POLE MOUNTED	URBIS	AXIA 2 S1	WOODEN PO	WOOD	5	NOT APPLICABI	Not Applicable	
46101305	SCHOOL LANE	Appleby Parish	495302.25	414795.57	5	7004	00193028	01/04/2015 00:00	1	2	LESS THAN 30MPH	ON POLE	500	SINGLE ARM	NOT APPLICABLE	POLE MOUNTED	URBIS	AXIA 2 S1	WOODEN PO	WOOD	5	NOT APPLICABI	Not Applicable	
46101305	SCHOOL LANE	Appleby Parish	495346.52	414814.73	6	7005	00193029	01/04/2015 00:00	1	2	LESS THAN 30MPH	ON POLE	500	SINGLE ARM	NOT APPLICABLE	POLE MOUNTED	URBIS	AXIA 2 S1	WOODEN PO	WOOD	5	NOT APPLICABI	Not Applicable	
46101305	SCHOOL LANE	Appleby Parish	495390.31	414832.87	7	7006	00193030	01/04/2015 00:00	1	2	LESS THAN 30MPH	ON POLE	500	SINGLE ARM	NOT APPLICABLE	POLE MOUNTED	URBIS	AXIA 2 S1	WOODEN PO	WOOD	5	NOT APPLICABI	Not Applicable	
46101305	SCHOOL LANE	Appleby Parish	495432.8	414849.25	8	7007	00193031	01/04/2015 00:00	1	2	LESS THAN 30MPH	ON POLE	500	SINGLE ARM	NOT APPLICABLE	POLE MOUNTED	URBIS	AXIA 2 S1	WOODEN PO	WOOD	5	NOT APPLICABI	Not Applicable	
46101305	SCHOOL LANE	Appleby Parish	495476.19	414864.71	9	7008	00193032	01/04/1965 00:00	1	2	LESS THAN 30MPH	ON POLE	500	SINGLE ARM	NOT APPLICABLE	POLE MOUNTED	URBIS	AXIA 2 S1	WOODEN PO	WOOD	5	NOT APPLICABI	Not Applicable	
46101306	SCHOOL LANE	Bonby Parish	500288.92	415325.99	1	7000	00193034	01/04/1989 00:00	6	2	LESS THAN 30MPH	BACK OF FOOTPATH	300	SINGLE ARM	NOT APPLICABLE	RIGID COLUMN	URBIS	AXIA 2 S1	PETITJEAN	SHEET STEEL	5	GALVANISED	DAER	
46101306	SCHOOL LANE	Bonby Parish	500265.98	415307.99	2	7001	00193035	01/04/1989 00:00	6	2	LESS THAN 30MPH	BACK OF FOOTPATH	500	SINGLE ARM	NOT APPLICABLE	RIGID COLUMN	URBIS	AXIA 2 S1	PETITJEAN	SHEET STEEL	5	GALVANISED	DAER	
46101306	SCHOOL LANE	Bonby Parish	500243.24	415282.86	3	7002	00193036	01/04/1989 00:00	6	2	LESS THAN 30MPH	BACK OF FOOTPATH	500	SINGLE ARM	NOT APPLICABLE	RIGID COLUMN	URBIS	AXIA 2 S1	PETITJEAN	SHEET STEEL	5	GALVANISED	DAER	
46101307	SCHOOL LANE	Goxhill Parish	510350.58	421367	1	7000	00193037	01/04/1980 00:00	4	4	LESS THAN 30MPH	VERGE	0	POST TOP	MID GREY	RIGID COLUMN	URBIS	AXIA 2 S1	PETITJEAN	SHEET STEEL	5	PAINTED	NIDD	
46101307	SCHOOL LANE	Goxhill Parish	510383.42	421371.54	2	7001	00193038	01/04/1980 00:00	4	4	LESS THAN 30MPH	VERGE	0	POST TOP	MID GREY	RIGID COLUMN	URBIS	AXIA 2 S1	PETITJEAN	SHEET STEEL	5	PAINTED	NIDD	
46101307	SCHOOL LANE	Goxhill Parish	510421.73	421376.73	3	7002	00193039	01/04/1980 00:00	4	4	LESS THAN 30MPH	VERGE	0	POST TOP	MID GREY	RIGID COLUMN	URBIS	AXIA 2 S1	PETITJEAN	SHEET STEEL	5	PAINTED	NIDD	
46101307	SCHOOL LANE	Goxhill Parish	510434.37	421379.69	4	7003	00193040	01/04/1980 00:00	4	4	LESS THAN 30MPH	VERGE	0	POST TOP	MID GREY	RIGID COLUMN	URBIS	AXIA 2 S1	PETITJEAN	SHEET STEEL	5	PAINTED	NIDD	
46101308	SCHOOL LANE	South Ferriby Parish	498749.44	420823.93	1	7004	04200175	01/04/1996 00:00	6	3	LESS THAN 30MPH	BACK OF PATH	0	POST TOP	NOT APPLICABLE	RIGID COLUMN	URBIS	AXIA 2 S1	MALLATITE	TUBULAR STEEL	6	GALVANISED	TUBULAR	
46101308	SCHOOL LANE	South Ferriby Parish	498718.89	420835.2	2	7000	00193041	01/04/1996 00:00	6	3	LESS THAN 30MPH	ON POLE	300	SINGLE ARM	NOT APPLICABLE	POLE MOUNTED	URBIS	AXIA 2 S1	WOODEN PO	WOOD	5	NOT APPLICABI	Not Applicable	
46101308	SCHOOL LANE	South Ferriby Parish	498682.9	420849.39	3	7001	00193042	01/04/1996 00:00	6	3	LESS THAN 30MPH	ON POLE	300	SINGLE ARM	NOT APPLICABLE	POLE MOUNTED	URBIS	AXIA 2 S1	WOODEN PO	WOOD	5	NOT APPLICABI	Not Applicable	
46101308	SCHOOL LANE	South Ferriby Parish	498641.2	420864.88	4	7002	00193043	01/04/1996 00:00	6	3	LESS THAN 30MPH	ON POLE	300	SINGLE ARM	NOT APPLICABLE	POLE MOUNTED	URBIS	AXIA 2 S1	WOODEN PO	WOOD	5	NOT APPLICABI	Not Applicable	
46101308	SCHOOL LANE	South Ferriby Parish	498609.59	420878.08	5	7003	00193044	02/09/2020 00:00	6	3	LESS THAN 30MPH	ON POLE	300	SINGLE ARM	NOT APPLICABLE	POLE MOUNTED	URBIS	AXIA 2 S1	WOODEN PO	WOOD	5	NOT APPLICABI	Not Applicable	
46101309	SCHOOL LANE	West Butterwick Parish	483418.4	405885.4	1	7000	00193045	01/04/2010 00:00	6	4	LESS THAN 30MPH	BACK OF FOOTPATH	0	POST TOP	NOT APPLICABLE	RIGID COLUMN	URBIS	AXIA 2 S1	MALLATITE	TUBULAR STEEL	6	GALVANISED	TUBULAR	
46101309	SCHOOL LANE	West Butterwick Parish	483424.61	405940.49	2	7001	00193046	01/04/1965 00:00	6	4	LESS THAN 30MPH	BACK OF FOOTPATH	300	SINGLE ARM	NOT APPLICABLE	RIGID COLUMN	URBIS	AXIA 2 S1	PETITJEAN	SHEET STEEL	5	GALVANISED	DAER	
46101309	SCHOOL LANE	West Butterwick Parish	483425.66	405977.42	3	7002	00194512	01/04/2010 00:00	6	4	LESS THAN 30MPH	BACK OF FOOTPATH	0	POST TOP	NOT APPLICABLE	RIGID COLUMN	URBIS	AXIA 2 S1	MALLATITE	TUBULAR STEEL	6	GALVANISED	TUBULAR	
46101310	SCHOOL ROAD	Scunthorpe	489718.44	408738.07	1FP	7000	00193047	01/03/2017 00:00	2	4	LESS THAN 30MPH	BACK OF FOOTPATH	500	DOUBLE ARM	NOT APPLICABLE	RIGID COLUMN	HOLOPHANE	VMAX V4 L084 LED	VALMONT ST	SHEET STEEL	8	GALVANISED	THAMES	
46101310	SCHOOL ROAD	Scunthorpe	489752.65	408731.33	2	7001	00193048	01/03/2017 00:00	2	4	LESS THAN 30MPH	BACK OF FOOTPATH	500	DOUBLE ARM	NOT APPLICABLE	RIGID COLUMN	HOLOPHANE	VMAX V4 L084 LED	VALMONT ST	SHEET STEEL	8	GALVANISED	THAMES	
46101310	SCHOOL ROAD	Scunthorpe	489726	408772	3	7005	04200128	01/03/2017 00:00	2	4	LESS THAN 30MPH	VERGE	500	SINGLE ARM	NOT APPLICABLE	RIGID COLUMN	HOLOPHANE	VMAX V4 L084 LED	VALMONT ST	SHEET STEEL	8	GALVANISED	THAMES	
46101310	SCHOOL ROAD	Scunthorpe	489776.71	408713.85	3	7002	00193049	01/04/2001 00:00	2	4	LESS THAN 30MPH	BACK OF FOOTPATH	300	SINGLE ARM	NOT APPLICABLE	RIGID COLUMN	URBIS	AXIA 2 S1	MALLATITE	TUBULAR STEEL	6	GALVANISED	STEPPED TUBULAR	
46101310	SCHOOL ROAD	Scunthorpe	489803.54	408712.41	4	7003	00193050	01/04/2001 00:00	2	4	LESS THAN 30MPH	BACK OF FOOTPATH	300	SINGLE ARM	NOT APPLICABLE	RIGID COLUMN	URBIS	AXIA 2 S1	MALLATITE	TUBULAR STEEL	6	GALVANISED	STEPPED TUBULAR	
46101310	SCHOOL ROAD	Scunthorpe	489754	408768	4	7006	04200129	01/03/2017 00:00	2	4	LESS THAN 30MPH	VERGE	500	SINGLE ARM	NOT APPLICABLE	RIGID COLUMN	HOLOPHANE	VMAX V4 L084 LED	VALMONT ST	SHEET STEEL	8	GALVANISED	THAMES	
46101310	SCHOOL ROAD	Scunthorpe	489836.23	408714.3	5	7004	00193051	01/04/2001 00:00	2	4	LESS THAN 30MPH	BACK OF FOOTPATH	300	SINGLE ARM	NOT APPLICABLE	RIGID COLUMN	URBIS	AXIA 2 S1	MALLATITE	TUBULAR STEEL	6	GALVANISED	STEPPED TUBULAR	
46101311	SCOTTER ROAD	Messingham Parish	489356.96	404180.56	1	7000	00193052	01/04/2002 00:00	4	1	LESS THAN 30MPH	BACK OF FOOTPATH	1000	SINGLE ARM	NOT APPLICABLE	RIGID COLUMN	URBIS	AXIA 2 S1	PETITJEAN	SHEET STEEL	10	GALVANISED	THAMES	
46101311	SCOTTER ROAD	Messingham Parish	489368.25	404140.17	2	7001	00193053	01/04/2002 00:00	4	1	LESS THAN 30MPH	VERGE	1000	SINGLE ARM	NOT APPLICABLE	RIGID COLUMN	URBIS	AXIA 2 S1	VALMONT ST	SHEET STEEL	10	GALVANISED	THAMES	
46101311	SCOTTER ROAD	Messingham Parish	489353.81	404104.09	3	7002	00193054	01/04/2002 00:00	4	1	LESS THAN 30MPH	BACK OF FOOTPATH	1000	SINGLE ARM	NOT APPLICABLE	RIGID COLUMN	URBIS	AXIA 2 S1	PETITJEAN	SHEET STEEL	10	GALVANISED	THAMES	
46101311	SCOTTER ROAD	Messingham Parish	489351.78	404073.76	4FP	7003	00193055	01/04/2002 00:00	4	1	LESS THAN 30MPH	BACK OF FOOTPATH	1000	SINGLE ARM	NOT APPLICABLE	RIGID COLUMN	URBIS	AXIA 2 S1	PETITJEAN	SHEET STEEL	10	GALVANISED	THAMES	
46101311	SCOTTER ROAD	Messingham Parish	489354.07	404040.08	5FP	7004	00193056	01/04/2002 00:00	4	1	LESS THAN 30MPH	BACK OF FOOTPATH	1000	SINGLE ARM	NOT APPLICABLE	RIGID COLUMN	URBIS	AXIA 2 S1	PETITJEAN	SHEET STEEL	10	GALVANISED	THAMES	
46101311	SCOTTER ROAD	Messingham Parish	489355.41	404023.76	6	7005	00193057	01/04/2002 00:00	4	1	LESS THAN 30MPH	VERGE	1000	SINGLE ARM	NOT APPLICABLE	RIGID COLUMN	URBIS	AXIA 2 S1	PETITJEAN	SHEET STEEL	10	GALVANISED	THAMES	
46101311	SCOTTER ROAD	Messingham Parish	489355.84	403994.02	7	7006	00193058	01/04/2002 00:00	4	1	LESS THAN 30MPH	VERGE	1000	SINGLE ARM	NOT APPLICABLE	RIGID COLUMN	URBIS	AXIA 2 S1	PETITJEAN	SHEET STEEL	10	GALVANISED	THAMES	
46101311	SCOTTER ROAD	Messingham Parish	489357.73	403963.92	8FP	7007	00193059	01/04/1993 00:00	4	1	LESS THAN 30MPH	VERGE	1000	SINGLE ARM	NOT APPLICABLE	RIGID COLUMN	URBIS	AXIA 2 S1	PETITJEAN	SHEET STEEL	10	GALVANISED	THAMES	
46101311	SCOTTER ROAD	Messingham Parish	489368	403865	9	7008	04200261	01/04/1973 00:00	4	1	BETWEEN 30-50 MPH	VERGE	800	SINGLE ARM	NOT APPLICABLE	POLE MOUNTED	URBIS	AXIA 2 S1	WOODEN PO	WOOD	6	NOT APPLICABI	Not Applicable	
46101312	SCOTTER ROAD SOUTH	Bottesford Parish	487395.45	407543.35	1	7000	00193060	01/04/1975 00:00	3	1	BETWEEN 30-50 MPH	VERGE	1000	SINGLE ARM	MID GREY	RIGID COLUMN	URBIS	AXIA 2 S1	PETITJEAN	SHEET STEEL	8	PAINTED	THAMES	
46101312	SCOTTER ROAD SOUTH	Bottesford Parish	487473.06	407263.42	10	7009	00193069	01/04/1975 00:00	3	1	BETWEEN 30-50 MPH	VERGE	1000	SINGLE ARM	MID GREY	RIGID COLUMN	URBIS	AXIA 2 S1	PETITJEAN	SHEET STEEL	8	PAINTED	THAMES	
46101312	SCOTTER ROAD SOUTH	Bottesford Parish	487468.5	407230.88	11	7010	00193070	01/04/1975 00:00	3	1	BETWEEN 30-50 MPH	VERGE	1000	SINGLE ARM	MID GREY	RIGID COLUMN	URBIS	AXIA 2 S1	PETITJEAN	SHEET STEEL	8	PAINTED	THAMES	
46101312	SCOTTER ROAD SOUTH	Bottesford Parish	487486.73	407202.96	12	7011	00193071

46101334	SHERWOOD VALE	Scunthorpe	487910.57	411297.18	4	7003	00193225	01/04/2004 00:00	6	3	LESS THAN 30MPH	BACK OF FOOTPATH	0	POST TOP	NOT APPLICABLE	RIGID COLUMN	WRTL	STELA WIDE 36 LED	MALLATITE	TUBULAR STEEL	6	GALVANISED	STEPPED TUBULAR
46101334	SHERWOOD VALE	Scunthorpe	487917.4	411324.45	5	7004	00193226	01/04/2004 00:00	6	3	LESS THAN 30MPH	BACK OF FOOTPATH	0	POST TOP	NOT APPLICABLE	RIGID COLUMN	WRTL	STELA WIDE 36 LED	MALLATITE	TUBULAR STEEL	6	GALVANISED	STEPPED TUBULAR
46101334	SHERWOOD VALE	Scunthorpe	487916.55	411350.16	6	7005	00193227	01/04/2004 00:00	6	3	LESS THAN 30MPH	BACK OF FOOTPATH	0	POST TOP	NOT APPLICABLE	RIGID COLUMN	WRTL	STELA WIDE 36 LED	MALLATITE	TUBULAR STEEL	6	GALVANISED	STEPPED TUBULAR
46101334	SHERWOOD VALE	Scunthorpe	487906.76	411378.57	7FP	7006	00193228	01/04/2004 00:00	6	3	LESS THAN 30MPH	VERGE	0	POST TOP	NOT APPLICABLE	RIGID COLUMN	WRTL	STELA WIDE 36 LED	MALLATITE	TUBULAR STEEL	6	GALVANISED	STEPPED TUBULAR
46101335	SHIPTON ROAD	Scunthorpe	490262.82	408088.15	1	7000	00193229	30/04/2021 00:00	1	3	LESS THAN 30MPH	BACK OF FOOTPATH	0	POST TOP	NOT APPLICABLE	RIGID COLUMN	URBIS	AXIA 2 S1	MALLATITE	TUBULAR STEEL	6	GALVANISED	TUBULAR
46101335	SHIPTON ROAD	Scunthorpe	489991.46	408065.44	10	7009	00193238	13/08/2019 00:00	1	3	LESS THAN 30MPH	BACK OF FOOTPATH	0	POST TOP	NOT APPLICABLE	RIGID COLUMN	URBIS	AXIA 2 S1	MALLATITE	TUBULAR STEEL	6	GALVANISED	TUBULAR
46101335	SHIPTON ROAD	Scunthorpe	489964.03	408073.64	11	7010	00193239	13/08/2019 00:00	1	3	LESS THAN 30MPH	FRONT OF FOOTPATH	0	POST TOP	NOT APPLICABLE	RIGID COLUMN	URBIS	AXIA 2 S1	MALLATITE	TUBULAR STEEL	6	GALVANISED	TUBULAR
46101335	SHIPTON ROAD	Scunthorpe	489936.47	408072.58	12	7011	00193240	13/08/2019 00:00	1	3	LESS THAN 30MPH	FRONT OF FOOTPATH	0	POST TOP	NOT APPLICABLE	RIGID COLUMN	URBIS	AXIA 2 S1	MALLATITE	TUBULAR STEEL	6	GALVANISED	TUBULAR
46101335	SHIPTON ROAD	Scunthorpe	489922.94	408062.05	13	7012	00193241	01/04/1999 00:00	1	3	LESS THAN 30MPH	BACK OF FOOTPATH	300	SINGLE ARM	NOT APPLICABLE	RIGID COLUMN	URBIS	AXIA 2 S1	T AND L	TUBULAR STEEL	5	GALVANISED	STEPPED TUBULAR
46101335	SHIPTON ROAD	Scunthorpe	489887.27	408070.72	14	7013	00193242	13/08/2019 00:00	1	3	LESS THAN 30MPH	FRONT OF FOOTPATH	0	POST TOP	NOT APPLICABLE	RIGID COLUMN	URBIS	AXIA 2 S1	MALLATITE	TUBULAR STEEL	6	GALVANISED	TUBULAR
46101335	SHIPTON ROAD	Scunthorpe	489857.51	408063.01	15	7014	00193243	13/08/2019 00:00	1	3	LESS THAN 30MPH	FRONT OF FOOTPATH	0	POST TOP	NOT APPLICABLE	RIGID COLUMN	URBIS	AXIA 2 S1	MALLATITE	TUBULAR STEEL	6	GALVANISED	TUBULAR
46101335	SHIPTON ROAD	Scunthorpe	489826.92	408073.73	16	7015	00193244	13/08/2019 00:00	1	3	LESS THAN 30MPH	FRONT OF FOOTPATH	0	POST TOP	NOT APPLICABLE	RIGID COLUMN	URBIS	AXIA 2 S1	MALLATITE	TUBULAR STEEL	6	GALVANISED	TUBULAR
46101335	SHIPTON ROAD	Scunthorpe	489791.72	408067.25	17	7016	00193245	13/08/2019 00:00	1	3	LESS THAN 30MPH	FRONT OF FOOTPATH	0	POST TOP	NOT APPLICABLE	RIGID COLUMN	URBIS	AXIA 2 S1	MALLATITE	TUBULAR STEEL	6	GALVANISED	TUBULAR
46101335	SHIPTON ROAD	Scunthorpe	489759.4	408075.14	18	7017	00193246	05/08/2019 00:00	1	3	LESS THAN 30MPH	FRONT OF FOOTPATH	0	POST TOP	NOT APPLICABLE	RIGID COLUMN	URBIS	AXIA 2 S1	MALLATITE	TUBULAR STEEL	6	GALVANISED	TUBULAR
46101335	SHIPTON ROAD	Scunthorpe	490020.83	408091.15	1A	7018	00193247	01/04/1999 00:00	1	3	NOT ON A ROAD	BACK OF FOOTPATH	0	POST TOP	NOT APPLICABLE	MID HINGED	URBIS	AXIA 2 S1	PETITJEAN	SHEET STEEL	5	GALVANISED	LEVEN
46101335	SHIPTON ROAD	Scunthorpe	490224.58	408079.8	2	7001	00193230	29/09/2017 00:00	1	3	LESS THAN 30MPH	BACK OF FOOTPATH	0	POST TOP	NOT APPLICABLE	RIGID COLUMN	URBIS	AXIA 2 S1	MALLATITE	TUBULAR STEEL	6	GALVANISED	TUBULAR
46101335	SHIPTON ROAD	Scunthorpe	490018.95	408129.1	2A	7019	00193248	01/04/1999 00:00	1	3	NOT ON A ROAD	BACK OF FOOTPATH	0	POST TOP	NOT APPLICABLE	MID HINGED	URBIS	AXIA 2 S1	PETITJEAN	SHEET STEEL	5	GALVANISED	LEVEN
46101335	SHIPTON ROAD	Scunthorpe	490189.7	408077.93	3	7002	00193231	29/09/2017 00:00	1	3	LESS THAN 30MPH	BACK OF FOOTPATH	0	POST TOP	NOT APPLICABLE	RIGID COLUMN	URBIS	AXIA 2 S1	MALLATITE	TUBULAR STEEL	6	GALVANISED	TUBULAR
46101335	SHIPTON ROAD	Scunthorpe	490156.12	408083.4	4	7003	00193232	13/08/2019 00:00	1	3	LESS THAN 30MPH	FRONT OF FOOTPATH	0	POST TOP	NOT APPLICABLE	RIGID COLUMN	URBIS	AXIA 2 S1	MALLATITE	TUBULAR STEEL	6	GALVANISED	TUBULAR
46101335	SHIPTON ROAD	Scunthorpe	490125.12	408071.58	5	7004	00193233	13/08/2019 00:00	1	3	LESS THAN 30MPH	BACK OF FOOTPATH	0	POST TOP	NOT APPLICABLE	RIGID COLUMN	URBIS	AXIA 2 S1	MALLATITE	TUBULAR STEEL	6	GALVANISED	TUBULAR
46101335	SHIPTON ROAD	Scunthorpe	490087.65	408082.19	6	7005	00193234	13/08/2019 00:00	1	3	LESS THAN 30MPH	BACK OF FOOTPATH	0	POST TOP	NOT APPLICABLE	RIGID COLUMN	URBIS	AXIA 2 S1	MALLATITE	TUBULAR STEEL	6	GALVANISED	TUBULAR
46101335	SHIPTON ROAD	Scunthorpe	490052.88	408070.29	7	7006	00193235	13/08/2019 00:00	1	3	LESS THAN 30MPH	FRONT OF FOOTPATH	0	POST TOP	NOT APPLICABLE	RIGID COLUMN	URBIS	AXIA 2 S1	MALLATITE	TUBULAR STEEL	6	GALVANISED	TUBULAR
46101335	SHIPTON ROAD	Scunthorpe	490017.72	408078.64	8	7007	00193236	13/08/2019 00:00	1	3	LESS THAN 30MPH	BACK OF FOOTPATH	0	POST TOP	NOT APPLICABLE	RIGID COLUMN	URBIS	AXIA 2 S1	MALLATITE	TUBULAR STEEL	6	GALVANISED	TUBULAR
46101335	SHIPTON ROAD	Scunthorpe	490018.14	408051.92	9	7008	00193237	13/08/2019 00:00	1	3	LESS THAN 30MPH	FRONT OF FOOTPATH	0	POST TOP	NOT APPLICABLE	RIGID COLUMN	URBIS	AXIA 2 S1	MALLATITE	TUBULAR STEEL	6	GALVANISED	TUBULAR
46101336	SHIRLEY CRESCENT	Scunthorpe	489889.78	409734.36	1	7000	00193249	01/04/2010 00:00	3	2	LESS THAN 30MPH	BACK OF FOOTPATH	0	POST TOP	NOT APPLICABLE	RIGID COLUMN	URBIS	AXIA 2 S1	VALMONT ST	TUBULAR STEEL	6	GALVANISED	TUBULAR
46101336	SHIRLEY CRESCENT	Scunthorpe	489880.43	409700.64	2	7001	00193250	01/04/2001 00:00	3	2	LESS THAN 30MPH	BACK OF FOOTPATH	0	POST TOP	NOT APPLICABLE	RIGID COLUMN	URBIS	AXIA 2 S1	MALLATITE	TUBULAR STEEL	6	GALVANISED	STEPPED TUBULAR
46101336	SHIRLEY CRESCENT	Scunthorpe	489900.6	409684	3	7002	00193251	01/04/2010 00:00	3	2	LESS THAN 30MPH	FRONT OF FOOTPATH	0	POST TOP	NOT APPLICABLE	RIGID COLUMN	URBIS	AXIA 2 S1	VALMONT ST	TUBULAR STEEL	6	GALVANISED	TUBULAR
46101336	SHIRLEY CRESCENT	Scunthorpe	489931.22	409662.63	4	7003	00193252	01/04/2010 00:00	3	2	LESS THAN 30MPH	FRONT OF FOOTPATH	0	POST TOP	NOT APPLICABLE	RIGID COLUMN	URBIS	AXIA 2 S1	VALMONT ST	TUBULAR STEEL	6	GALVANISED	TUBULAR
46101337	SHORE ROAD	Garthorpe and Fockerby Parish	484887.77	419180.2	1	7000	00193253	01/04/1988 00:00	6	1	LESS THAN 30MPH	BACK OF FOOTPATH	0	POST TOP	NOT APPLICABLE	RIGID COLUMN	URBIS	AXIA 2 S1	FABRIKAT	TUBULAR STEEL	5	GALVANISED	5M01A
46101337	SHORE ROAD	Garthorpe and Fockerby Parish	485110.15	419024.18	10	7009	00193262	01/04/1988 00:00	6	1	LESS THAN 30MPH	BACK OF FOOTPATH	0	POST TOP	NOT APPLICABLE	RIGID COLUMN	URBIS	AXIA 2 S1	FABRIKAT	TUBULAR STEEL	5	GALVANISED	5M01A
46101337	SHORE ROAD	Garthorpe and Fockerby Parish	485143.22	419010.07	11	7010	00193263	01/04/1988 00:00	6	1	LESS THAN 30MPH	BACK OF FOOTPATH	0	POST TOP	NOT APPLICABLE	RIGID COLUMN	URBIS	AXIA 2 S1	FABRIKAT	TUBULAR STEEL	5	GALVANISED	5M01A
46101337	SHORE ROAD	Garthorpe and Fockerby Parish	485173.85	418998.02	12	7011	00193264	01/04/1988 00:00	6	1	LESS THAN 30MPH	BACK OF FOOTPATH	0	POST TOP	NOT APPLICABLE	RIGID COLUMN	URBIS	AXIA 2 S1	CU	TUBULAR STEEL	5	GALVANISED	PRECINCT
46101337	SHORE ROAD	Garthorpe and Fockerby Parish	485200.46	418985.86	13	7012	00193265	01/04/1988 00:00	6	1	LESS THAN 30MPH	BACK OF FOOTPATH	0	POST TOP	NOT APPLICABLE	RIGID COLUMN	URBIS	AXIA 2 S1	FABRIKAT	TUBULAR STEEL	5	GALVANISED	5M01A
46101337	SHORE ROAD	Garthorpe and Fockerby Parish	485228.91	418982.27	14	7013	00193266	01/04/1988 00:00	6	1	LESS THAN 30MPH	VERGE	0	POST TOP	NOT APPLICABLE	RIGID COLUMN	URBIS	AXIA 2 S1	FABRIKAT	TUBULAR STEEL	5	GALVANISED	5M01A
46101337	SHORE ROAD	Garthorpe and Fockerby Parish	485260	418968.73	15	7014	00193267	01/04/1988 00:00	6	1	LESS THAN 30MPH	VERGE	0	POST TOP	NOT APPLICABLE	RIGID COLUMN	URBIS	AXIA 2 S1	FABRIKAT	TUBULAR STEEL	5	GALVANISED	5M01A
46101337	SHORE ROAD	Garthorpe and Fockerby Parish	485288.8	418957.1	16	7015	00193268	01/04/1988 00:00	6	1	LESS THAN 30MPH	VERGE	0	POST TOP	NOT APPLICABLE	RIGID COLUMN	URBIS	AXIA 2 S1	FABRIKAT	TUBULAR STEEL	5	GALVANISED	5M01A
46101337	SHORE ROAD	Garthorpe and Fockerby Parish	485313	418948.27	17	7016	00193269	01/04/1988 00:00	6	1	LESS THAN 30MPH	VERGE	0	POST TOP	NOT APPLICABLE	RIGID COLUMN	URBIS	AXIA 2 S1	FABRIKAT	TUBULAR STEEL	5	GALVANISED	5M01A
46101337	SHORE ROAD	Garthorpe and Fockerby Parish	485342	418938.73	18	7017	00193270	01/04/1988 00:00	6	1	LESS THAN 30MPH	VERGE	0	POST TOP	NOT APPLICABLE	RIGID COLUMN	URBIS	AXIA 2 S1	FABRIKAT	TUBULAR STEEL	5	GALVANISED	5M01A
46101337	SHORE ROAD	Garthorpe and Fockerby Parish	485371.01	418947.39	19	7018	00193271	01/04/1988 00:00	6	1	LESS THAN 30MPH	VERGE	0	POST TOP	NOT APPLICABLE	RIGID COLUMN	URBIS	AXIA 2 S1	FABRIKAT	TUBULAR STEEL	5	GALVANISED	5M01A
46101337	SHORE ROAD	Garthorpe and Fockerby Parish	484913.27	419164.08	2	7001	00193254	01/04/1988 00:00	6	1	LESS THAN 30MPH	BACK OF FOOTPATH	0	POST TOP	NOT APPLICABLE	RIGID COLUMN	URBIS	AXIA 2 S1	FABRIKAT	TUBULAR STEEL	5	GALVANISED	5M01A
46101337	SHORE ROAD	Garthorpe and Fockerby Parish	485399.67	418956.63	20	7019	00193272	01/04/1988 00:00	6	1	LESS THAN 30MPH	VERGE	0	POST TOP	NOT APPLICABLE	RIGID COLUMN	URBIS	AXIA 2 S1	FABRIKAT	TUBULAR STEEL	5	GALVANISED	5M01A
46101337	SHORE ROAD	Garthorpe and Fockerby Parish	485431.86	418955.32	21	7020	00193273	01/04/1988 00:00	6	1	LESS THAN 30MPH	VERGE	0	POST TOP	NOT APPLICABLE	RIGID COLUMN	URBIS	AXIA 2 S1	FABRIKAT	TUBULAR STEEL	5	GALVANISED	5M01A
46101337	SHORE ROAD	Garthorpe and Fockerby Parish	485463.86	418953.04	22	7021	00193274	01/04/1988 00:00	6	1	LESS THAN 30MPH	VERGE	0	POST TOP	NOT APPLICABLE	RIGID COLUMN	URBIS	AXIA 2 S1	FABRIKAT	TUBULAR STEEL	5	GALVANISED	5M01A
46101337	SHORE ROAD	Garthorpe and Fockerby Parish	485495.16	418947.34	23	7022	00193275	01/04/1988 00:00	6	1	LESS THAN 30MPH	BACK OF FOOTPATH	0	POST TOP	NOT APPLICABLE	RIGID COLUMN	URBIS	AXIA 2 S1	FABRIKAT	TUBULAR STEEL	5	GALVANISED	5M01A
46101337	SHORE ROAD	Garthorpe and Fockerby Parish	485524.69	418943.21	24	7023	00193276	01/04/1988 00:00	6	1	LESS THAN 30MPH	BACK OF FOOTPATH	0	POST TOP	NOT APPLICABLE	RIGID COLUMN	URBIS	AXIA 2 S1	FABRIKAT	TUBULAR STEEL	5	GALVANISED	5M01A
46101337	SHORE ROAD	Garthorpe and Fockerby Parish	484939	419147	3	7002	00193255	01/04/1988 00:00	6	1	LESS THAN 30MPH	BACK OF FOOTPATH	0	POST TOP	NOT APPLICABLE	RIGID COLUMN	URBIS	AXIA 2 S1	FABRIKAT	TUBULAR STEEL	5	GALVANISED	5M01A
46101337	SHORE ROAD	Garthorpe and Fockerby Parish	484961.24	419132.88	4	7003	00193256	01/04/1988 00:00	6	1	LESS THAN 30MPH	BACK OF FOOTPATH	0	POST TOP	NOT APPLICABLE	RIGID COLUMN	URBIS	AXIA 2 S1	FABRIKAT	TUBULAR STEEL	5	GALVANISED	5M01A
46101337	SHORE ROAD	Garthorpe and Fockerby Parish	484987.04	419115.57	5	7004	00193257	01/04/1988 00:00	6	1	LESS THAN 30MPH	BACK OF FOOTPATH	0	POST TOP	NOT APPLICABLE	RIGID COLUMN	URBIS	AXIA 2 S1	FABRIKAT	TUBULAR STEEL	5	GALVANISED	5M01A
46101337	SHORE ROAD	Garthorpe and Fockerby Parish	485011.96	419099.08	6	7005	00193258	01/04/1988 00:00	6	1	LESS THAN 30MPH	BACK OF FOOTPATH	0	POST TOP	NOT APPLICABLE	RIGID COLUMN	URBIS	AXIA 2 S1	FABRIKAT	TUBULAR STEEL	5	GALVANISED	5M01A
46101337	SHORE ROAD	Garthorpe and Fockerby Parish	485033.19	419083.76	7	7006	00193259	01/04/1988 00:00	6	1	LESS THAN 30MPH	BACK OF FOOTPATH	0	POST TOP	NOT APPLICABLE	RIGID COLUMN	URBIS	AXIA 2 S1	FABRIKAT	TUBULAR STEEL	5	GALVANISED	5M01A
46101337	SHORE ROAD	Garthorpe and Fockerby Parish	485055.77	419067.68	8	7007	00193260	01/04/1988 00:00	6	1	LESS THAN 30MPH	BACK OF FOOTPATH	0	POST TOP	NOT APPLICABLE	RIGID COLUMN	URBIS	AXIA 2 S1	FABRIKAT	TUBULAR STEEL	5	GALVANISED	5M01A
46101337	SHORE ROAD	Garthorpe and Fockerby Parish	485081.62	419048.15	9	7008	00193261	01/04/1988 00:00	6	1	LESS THAN 30MPH	BACK OF FOOTPATH	0	POST TOP	NOT APPLICABLE	RIGID COLUMN	URBIS	AXIA 2 S1	FABRIKAT	TUBULAR STEEL	5	GALVANISED	5M01A
46101338	SHORT LANE	West Halton Parish	490588.5	421032.25	1	7000	00193277	01/04/2012 00:00	1	3	LESS THAN 30MPH	BACK OF FOOTPATH	0	POST TOP	NOT APPLICABLE	RIGID COLUMN	URBIS	AXIA 2 S1	MALLATITE	TUBULAR STEEL	6	GALVANISED	TUBULAR
46101338	SHORT LANE	West Halton Parish	490584.72	421070.35	2	7001	00193278	01/04/1980 00:00	1	3	LESS THAN 30MPH	BACK OF FOOTPATH	300	SINGLE ARM	NOT APPLICABLE	RIGID COLUMN	URBIS	AXIA 2 S1	PETITJEAN	SHEET STEEL	5	GALVANISED	DAER
46101338	SHORT LANE	West Halton Parish	490580.52	421103.92	3	7002	00193279	01/04/2012 00:00	1	3	LESS THAN 30MPH	BACK OF FOOTPATH	0	POST TOP	NOT APPLICABLE	RIGID COLUMN	URBIS	AXIA 2 S1	MALLATITE	TUBULAR STEEL	6	GALVANISED	TUBULAR
46101339	SIDNEY ROAD	Scunthorpe	487492.66	408793.27	1	7000	00193280	01/04/2010 00:00	5	2	LESS THAN 30MPH	BACK OF FOOTPATH	0	POST TOP	NOT APPLICABLE	RIGID COLUMN	URBIS	AXIA 2 S1	MALLATITE	TUBULAR STEEL	5	GALVANISED	TUBULAR
46101339	SIDNEY ROAD	Scunthorpe	487497.53	408818.4	2	7001	00193281	01/04/1980 00:00	5	2	LESS THAN 30MPH	BACK OF FOOTPATH	300	SINGLE ARM	NOT APPLICABLE	RIGID COLUMN	URBIS	AXIA 2 S1	PETITJEAN	SHEET STEEL	5	GALVANISED	DAER
46101340	SILICA CRESCENT	Scunthorpe	487511.56	408162.59	1	7000	00193282	01/04/1980 00:00	3	4	LESS THAN 30MPH	BACK OF FOOTPATH	300	SINGLE ARM	NOT APPLICABLE	RIGID COLUMN	URBIS	AXIA 2 S1	PETITJEAN	SHEET STEEL	5	GALVANISED	DAER
46101340	SILICA CRESCENT	Scunthorpe	487621.98	408039.43	10	7009	00193291	21/11/2020 00:00	3	4	LESS THAN 30MPH	BACK OF FOOTPATH	0	POST TOP	NOT APPLICABLE	RIGID COLUMN	URBIS	AXIA 2 S1	MALLATITE	TUBULAR STEEL	6	GALVANISED	TUBULAR
46101340	SILICA CRESCENT	Scunthorpe	487648.17	408061.84	11	7010	00193292	01/04/1980 00:00	3	4	LESS THAN 30MPH	BACK OF FOOTPATH	0	POST TOP	NOT APPLICABLE	RIGID COLUMN	URBIS	AXIA 2 S1	MALLATITE	TUBULAR STEEL	6	GALVANISED	TUBULAR
46101340	SILICA CRESCENT	Scunthorpe	487487.82	408141.57	2	7001	00193283	01/04/2010 00:00	3	4	LESS THAN 30MPH	FRONT OF FOOTPATH	0	POST TOP	NOT APPLICABLE	RIGID COLUMN	URBIS	AXIA 2 S1	MALLATITE	TUBULAR STEEL	6	GALVANISED	TUBULAR
46101340	SILICA CRESCENT	Scunthorpe	487490.77	408116.94	3	7002	00193284	21/11/2020 00:00	3	4	LESS THAN 30MPH	BACK OF FOOTPATH	0	POST TOP	NOT APPLICABLE	RIGID COLUMN	URBIS	AXIA 2 S1	MALLATITE	TUBULAR STEEL	6	GALVANISED	TUBULAR
46101340	SILICA CRESCENT	Scunthorpe	487483.52	408096.06	4	7003	00193285	21/11/2020 00:00	3	4	LESS THAN 30MPH	BACK OF FOOTPATH	0	POST TOP	NOT APPLICABLE	RIGID COLUMN	URBIS	AXIA 2 S1	MALLATITE	TUBULAR STEEL	6	GALVANISED	TUBULAR
46101340	SILICA CRESCENT	Scunthorpe	487491.63	408075.45	5	7004	00193286	21/11/2020 00:00	3	4	LESS THAN 30MPH	BACK OF FOOTPATH	0	POST TOP	NOT APPLICABLE	RIGID COLUMN	URBIS	AXIA 2 S1	MALLATITE	TUBULAR STEEL	6	GALVANISED	TUBULAR
46101340	SILICA CRESCENT	Scunthorpe	487513.49	408067.03	6	7005	00193287	21/11/2020 00:00	3	4	LESS THAN 30MPH	BACK OF FOOTPATH	0	POST TOP	NOT APPLICABLE	RIGID COLUMN	URBIS	AXIA 2 S1	MALLATITE	TUBULAR STEEL	6	GALVANISED	TUBULAR
46101340	SILICA CRESCENT	Scunthorpe	487521.6	408049.86	7	7006	00193288	21/11/2020 00:00	3	4	LESS THAN 30MPH	BACK OF FOOTPATH	0	POST TOP	NOT APPLICABLE	RIGID COLUMN	URBIS	AXIA 2 S1	MALLATITE	TUBULAR STEEL	6	GALVANISED	TUBULAR
46101340	SILICA CRESCENT	Scunthorpe	487550.64	408035.91	8	7007	00193289	21/11/2020 00:00	3	4	LESS THAN 30MPH	BACK OF FOOTPATH	0	POST TOP	NOT APPLICABLE	RIGID COLUMN	URBIS	AXIA 2 S1	MALLATITE	TUBULAR STEEL	6	GALVANISED	TUBULAR
46101340	SILICA CRESCENT	Scunthorpe	487576.9	408030.1	9	7008	00193290	21/11/2020 00:00	3	4	LESS THAN 30MPH	BACK OF FOOTPATH	0	POST TOP	NOT APPLICABLE	RIGID COLUMN	URBIS	AXIA 2 S1	MALLATITE	TUBULAR STEEL	6	GALVANISED	TUBULAR
46101341	SILVER BIRCH RISE	Bottesford Parish	489958.88	407389.95	1	7000	00193293	08/07/2019 00:00	3	1	LESS THAN 30MPH	BACK OF FOOTPATH	0	POST TOP	NOT APPLICABLE	RIGID COLUMN	URBIS	AXIA 2 S1	MALLATITE	TUBULAR STEEL	6	GALVANISED	TUBULAR
46101341	SILVER BIRCH RISE	Bottesford Parish	489927.2	407391.72	2	7001	00193294	08/07/2019 00:00	3	1	LESS THAN 30MPH	BACK OF FOOTPATH	0	POST TOP	NOT APPLICABLE	RIGID COLUMN	URBIS	AXIA 2 S1	MALLATITE	TUBULAR STEEL	6	GALVANISED	TUBULAR
46101341	SILVER BIRCH RISE	Bottesford Parish	489904.56	407413.09	3	7002	00193295	08/07/2019 00:00	3	1	LESS THAN 30MPH	BACK OF FOOTPATH	0	POST TOP	NOT APPLICABLE	RIGID COLUMN	URBIS	AXIA 2 S1	MALLATITE	TUBULAR STEEL	6	GALVANISED	TUBULAR
46101341	SILVER BIRCH RISE	Bottesford Parish	489874.08	407427.33	4	7003	00193296	08/07/2019 00:00	3	1	LESS THAN 30MPH	BACK OF FOOTPATH	0	POST TOP	NOT APPLICABLE	RIGID COLUMN	URBIS	AXIA 2 S1	MALLATITE	TUBULAR STEEL	6	GALVANISED	TUBULAR
46101341	SILVER BIRCH RISE	Bottesford Parish	489844.09	407424.55	5	7004	00193297	08/07/2019 00:00	3	1	LESS THAN 30MPH	BACK OF FOOTPATH	0	POST TOP	NOT APPLICABLE	RIGID COLUMN	URBIS	AXIA 2 S1	MALLATITE	TUBULAR STEEL	6	GALVANISED	TUBULAR
46101341	SILVER BIRCH RISE	Bottesford Parish	489822.03	407404.13	6	7005	00193298	08/07/2019 00:00	3	1	LESS THAN 30MPH	BACK OF FOOTPATH	0	POST TOP	NOT APPLICABLE	RIGID COLUMN	URBIS	AXIA 2 S1	MALLATITE	TUBULAR STEEL	6	GALVANISED	TUBULAR
46101342	SILVER STREET	Barnetby Le Wold Parish	505627.96	409871.84	1	7000	00193299	01/04/2007 00:00	3	2	BETWEEN 30-50 MPH	BACK OF FOOTPATH	0	POST TOP	NOT APPLICABLE	RIGID COLUMN	URBIS	AXIA 2 S1	MALLATITE	TUBULAR STEEL	5	GALVANISED	STEPPED TUBULAR
46101342	SILVER STREET	Barnetby Le Wold Parish	505614.52	409847.76	2	7001	00193300	01/04/2007 00:00	3	2	BETWEEN 30-50 MPH	BACK OF FOOTPATH	0	POST TOP	NOT APPLICABLE	RIGID COLUMN	URBIS	AXIA 2 S1	MALLATITE	TUBULAR STEEL	5	GALVANISED	STEPPED TUBULAR
46101342	SILVER STREET	Barnetby Le Wold Parish	505593.94	409824.8	3	7002	00193301	01/04/2007 00:00	3	2	BETWEEN 30-50 MPH	BACK OF FOOTPATH	0	POST TOP	NOT APPLICABLE	RIGID COLUMN	URBIS	AXIA 2 S1	MALLATITE	TUBULAR STEEL	5	GALVANISED	STEPPED TUBULAR
46101342	SILVER STREET	Barnetby Le Wold Parish	505591.77	409789.24	4	7003	00193302	01/04/2007 00:00	3	2	BETWEEN 30-50 MPH	BACK OF FOOTPATH	0	POST TOP	NOT APPLICABLE	RIGID COLUMN	URBIS	AXIA 2 S1	MALLATITE	TUBULAR STEEL	5	GALVANISED	STEPPED TUBULAR
46101342	SILVER STREET	Barnetby Le Wold Parish	505570.56	409766.98	5	7004	00193303	01/04/2007 00:00	3	2	BETWEEN 30-50 MPH	BACK OF FOOTPATH	0	POST TOP	NOT APPLICABLE	RIGID COLUMN	URBIS	AXIA 2 S1	MALLATITE	TUBULAR STEEL	5	GALVANISED	STEPPED TUBULAR
46101342	SILVER STREET	Barnetby Le Wold Parish	505569.37	409735.62	6	7005	00193304	01/04/2007 00:00	3	2	BETWEEN 30-50 MPH	BACK OF FOOTPATH	0	POST TOP	NOT APPLICABLE	RIGID COLUMN	URBIS	AXIA 2 S1	MALLATITE	TUBULAR STEEL	5	GALVANISED	STEPPED TUBULAR
46101342	SILVER STREET	Barnetby Le Wold Parish	505545.78	409711.96	7	7006	00193305	01/04/2007 00:00	3	2	BETWEEN 30-50 MPH	BACK OF FOOTPATH	0	POST TOP	NOT APPLICABLE	RIGID COLUMN	URBIS	AXIA 2 S1	MALLATITE	TUBULAR STEEL	5	GALVANISED	STEPPED TUBULAR
46101342	SILVER STREET	Barnetby Le Wold Parish	505531.64	409678.64	8	7007	00193306	01/04/2007 00:00	3	2	BETWEEN 30-50 MPH	BACK OF FOOTPATH	0	POST TOP	NOT APPLICABLE	RIGID COLUMN	URBIS	AXIA 2 S1	MALLATITE	TUBULAR STEEL	5	GALVANISED	STEPPED TUBULAR
46101342	SILVER STREET	Barnetby Le Wold Parish	505529	409649	9	7008	00193307	01/04/2007 00:00	3	2	BETWEEN 30-50 MPH	BACK OF FOOTPATH	0	POST TOP	NOT APPLICABLE	RIGID COLUMN	URBIS	AXIA 2 S1	MALLATITE	TUBULAR STEEL	5	GALVANISED	STEPPED TUBULAR
46101343	SILVER STREET	Owston Ferry Parish	481268.44	399996.9	1	7000	00193308	01/04/1980 00:00	6	2	LESS THAN 30MPH	BACK OF FOOTPATH	300	SINGLE ARM	NOT APPLICABLE	RIGID COLUMN	URBIS	AXIA 2 S1	PETITJEAN	SHEET STEEL	5	GALVANISED	DAER
46101343	SILVER STREET	Owston Ferry Parish	481258.47	399972.35	2	7001	00193309	01/04/1980 00:00	6	2	LESS THAN 30MPH	BACK OF FOOTPATH	300	SINGLE ARM	NOT APPLICABLE	RIGID COLUMN	URBIS	AXIA 2 S1	PETITJEAN	SHEET STEEL	5	GALVANIS

46101364	SOUTH CLIFF ROAD	Kirton in Lindsey Parish	494108.85	397934.36	28	7029	00193498	01/04/1973 00:00	1	3	BETWEEN 30-50 MPH	VERGE	800	SINGLE ARM	NOT APPLICABLE	RIGID COLUMN	URBIS	AXIA 2 S1	THORN	ALUMINIUM	8	ALUMINIUM	QC8	
46101364	SOUTH CLIFF ROAD	Kirton in Lindsey Parish	494110.98	397896.78	29	7030	00193499	01/04/1973 00:00	1	3	GREATER THAN 50MPH	VERGE	800	SINGLE ARM	NOT APPLICABLE	RIGID COLUMN	URBIS	AXIA 2 S1	THORN	ALUMINIUM	8	ALUMINIUM	QC8	
46101364	SOUTH CLIFF ROAD	Kirton in Lindsey Parish	494110.85	397856.54	30	7031	00193500	06/04/2022 00:00	1	3	BETWEEN 30-50 MPH	VERGE	1000	SINGLE ARM	NOT APPLICABLE	RIGID COLUMN	URBIS	AXIA 2 S1	MALLATITE	TUBULAR STEEL	8	GALVANISED	TUBULAR	
46101364	SOUTH CLIFF ROAD	Kirton in Lindsey Parish	493878.15	398695.75	3FP	7004	00193473	01/04/1973 00:00	1	3	LESS THAN 30MPH	FRONT OF FOOTPATH	1000	SINGLE ARM	NOT APPLICABLE	RIGID COLUMN	URBIS	AXIA 2 S1	THORN	ALUMINIUM	8	ALUMINIUM	QC8	
46101364	SOUTH CLIFF ROAD	Kirton in Lindsey Parish	493877	398668.21	4	7005	00193474	01/04/1973 00:00	1	3	LESS THAN 30MPH	BACK OF FOOTPATH	1000	SINGLE ARM	NOT APPLICABLE	RIGID COLUMN	URBIS	AXIA 2 S1	THORN	ALUMINIUM	8	ALUMINIUM	QC8	
46101364	SOUTH CLIFF ROAD	Kirton in Lindsey Parish	493865.22	398632.14	5	7006	00193475	01/04/1973 00:00	1	3	LESS THAN 30MPH	BACK OF FOOTPATH	300	SINGLE ARM	NOT APPLICABLE	RIGID COLUMN	URBIS	AXIA 2 S1	THORN	ALUMINIUM	8	ALUMINIUM	QC8	
46101364	SOUTH CLIFF ROAD	Kirton in Lindsey Parish	493853.18	398600.39	6	7007	00193476	01/04/1973 00:00	1	3	LESS THAN 30MPH	BACK OF FOOTPATH	300	SINGLE ARM	NOT APPLICABLE	RIGID COLUMN	URBIS	AXIA 2 S1	THORN	ALUMINIUM	8	ALUMINIUM	QC8	
46101364	SOUTH CLIFF ROAD	Kirton in Lindsey Parish	493837.02	398560.94	7	7008	00193477	01/04/1973 00:00	1	3	LESS THAN 30MPH	FRONT OF FOOTPATH	300	SINGLE ARM	NOT APPLICABLE	RIGID COLUMN	URBIS	AXIA 2 S1	THORN	ALUMINIUM	8	ALUMINIUM	QC8	
46101364	SOUTH CLIFF ROAD	Kirton in Lindsey Parish	493814.1	398527.88	8	7009	00193478	01/04/1973 00:00	1	3	LESS THAN 30MPH	BACK OF FOOTPATH	800	SINGLE ARM	NOT APPLICABLE	RIGID COLUMN	URBIS	AXIA 2 S1	THORN	ALUMINIUM	8	ALUMINIUM	QC8	
46101364	SOUTH CLIFF ROAD	Kirton in Lindsey Parish	493801.66	398485.23	9	7010	00193479	01/04/1973 00:00	1	3	LESS THAN 30MPH	BACK OF FOOTPATH	800	SINGLE ARM	NOT APPLICABLE	RIGID COLUMN	URBIS	AXIA 2 S1	THORN	ALUMINIUM	8	ALUMINIUM	QC8	
46101366	SOUTH PARK ROAD	Bottesford Parish	487452.41	407415.84	1	7000	00193501	01/04/1986 00:00	3	1	LESS THAN 30MPH	BACK OF FOOTPATH	1000	SINGLE ARM	MID GREY	RIGID COLUMN	URBIS	AXIA 2 S1	PETITJEAN	SHEET STEEL	8	PAINTED	THAMES	
46101366	SOUTH PARK ROAD	Bottesford Parish	487720.73	407442.14	10	7009	00193510	01/04/1986 00:00	3	1	LESS THAN 30MPH	BACK OF FOOTPATH	1000	SINGLE ARM	MID GREY	RIGID COLUMN	URBIS	AXIA 2 S1	PETITJEAN	SHEET STEEL	8	PAINTED	THAMES	
46101366	SOUTH PARK ROAD	Bottesford Parish	487756.97	407434.66	11	7010	00193511	01/04/1986 00:00	3	1	LESS THAN 30MPH	BACK OF FOOTPATH	1000	SINGLE ARM	MID GREY	RIGID COLUMN	URBIS	AXIA 2 S1	PETITJEAN	SHEET STEEL	8	PAINTED	THAMES	
46101366	SOUTH PARK ROAD	Bottesford Parish	487783.32	407449.71	12	7011	00193512	01/04/1986 00:00	3	1	LESS THAN 30MPH	BACK OF FOOTPATH	1000	SINGLE ARM	MID GREY	RIGID COLUMN	URBIS	AXIA 2 S1	PETITJEAN	SHEET STEEL	8	PAINTED	THAMES	
46101366	SOUTH PARK ROAD	Bottesford Parish	487817.27	407441.27	13	7012	00193513	01/04/1986 00:00	3	1	LESS THAN 30MPH	BACK OF FOOTPATH	1000	SINGLE ARM	MID GREY	RIGID COLUMN	URBIS	AXIA 2 S1	PETITJEAN	SHEET STEEL	8	PAINTED	THAMES	
46101366	SOUTH PARK ROAD	Bottesford Parish	487480.52	407418.39	2	7001	00193502	01/04/1986 00:00	3	1	LESS THAN 30MPH	BACK OF FOOTPATH	1000	SINGLE ARM	MID GREY	RIGID COLUMN	URBIS	AXIA 2 S1	PETITJEAN	SHEET STEEL	8	PAINTED	THAMES	
46101366	SOUTH PARK ROAD	Bottesford Parish	487516.78	407406.06	3	7002	00193503	01/04/1986 00:00	3	1	LESS THAN 30MPH	VERGE	1000	SINGLE ARM	MID GREY	RIGID COLUMN	URBIS	AXIA 2 S1	PETITJEAN	SHEET STEEL	8	PAINTED	THAMES	
46101366	SOUTH PARK ROAD	Bottesford Parish	487549.45	407421.89	4	7003	00193504	01/04/1986 00:00	3	1	LESS THAN 30MPH	BACK OF FOOTPATH	1000	SINGLE ARM	MID GREY	RIGID COLUMN	URBIS	AXIA 2 S1	PETITJEAN	SHEET STEEL	8	PAINTED	THAMES	
46101366	SOUTH PARK ROAD	Bottesford Parish	487573.11	407411.94	5	7004	00193505	01/04/1986 00:00	3	1	LESS THAN 30MPH	BACK OF FOOTPATH	1000	SINGLE ARM	MID GREY	RIGID COLUMN	URBIS	AXIA 2 S1	PETITJEAN	SHEET STEEL	8	PAINTED	THAMES	
46101366	SOUTH PARK ROAD	Bottesford Parish	487610.9	407428.98	6	7005	00193506	01/04/1986 00:00	3	1	LESS THAN 30MPH	BACK OF FOOTPATH	1000	SINGLE ARM	MID GREY	RIGID COLUMN	URBIS	AXIA 2 S1	PETITJEAN	SHEET STEEL	8	PAINTED	THAMES	
46101366	SOUTH PARK ROAD	Bottesford Parish	487641.31	407419.94	7	7006	00193507	01/04/1986 00:00	3	1	LESS THAN 30MPH	BACK OF FOOTPATH	1000	SINGLE ARM	MID GREY	RIGID COLUMN	URBIS	AXIA 2 S1	PETITJEAN	SHEET STEEL	8	PAINTED	THAMES	
46101366	SOUTH PARK ROAD	Bottesford Parish	487667.4	407435.99	8	7007	00193508	01/04/1986 00:00	3	1	LESS THAN 30MPH	BACK OF FOOTPATH	1000	SINGLE ARM	MID GREY	RIGID COLUMN	URBIS	AXIA 2 S1	PETITJEAN	SHEET STEEL	8	PAINTED	THAMES	
46101366	SOUTH PARK ROAD	Bottesford Parish	487691.69	407426.54	9	7008	00193509	01/04/1986 00:00	3	1	LESS THAN 30MPH	BACK OF FOOTPATH	1000	SINGLE ARM	MID GREY	RIGID COLUMN	URBIS	AXIA 2 S1	PETITJEAN	SHEET STEEL	8	PAINTED	THAMES	
46101367	SOUTH SIDE	Winteringham Parish	493009.58	422152.44	1	7000	00193514	01/04/1982 00:00	1	3	LESS THAN 30MPH	BACK OF FOOTPATH	800	SINGLE ARM	NOT APPLICABLE	RIGID COLUMN	URBIS	AXIA 2 S1	PETITJEAN	SHEET STEEL	6	GALVANISED	DAER	
46101367	SOUTH SIDE	Winteringham Parish	492992.75	422125.94	2	7001	00193515	01/04/1982 00:00	1	3	LESS THAN 30MPH	BACK OF FOOTPATH	800	SINGLE ARM	NOT APPLICABLE	RIGID COLUMN	URBIS	AXIA 2 S1	PETITJEAN	SHEET STEEL	6	GALVANISED	DAER	
46101367	SOUTH SIDE	Winteringham Parish	492997.27	422096.71	3	7002	00193516	01/04/1982 00:00	1	3	LESS THAN 30MPH	BACK OF FOOTPATH	800	SINGLE ARM	NOT APPLICABLE	RIGID COLUMN	URBIS	AXIA 2 S1	PETITJEAN	SHEET STEEL	6	GALVANISED	DAER	
46101367	SOUTH SIDE	Winteringham Parish	492981.14	422075.74	4	7003	00193517	01/04/1982 00:00	1	3	LESS THAN 30MPH	BACK OF FOOTPATH	800	SINGLE ARM	NOT APPLICABLE	RIGID COLUMN	URBIS	AXIA 2 S1	PETITJEAN	SHEET STEEL	6	GALVANISED	DAER	
46101367	SOUTH SIDE	Winteringham Parish	492986.07	422049.99	5	7004	00193518	01/04/1982 00:00	1	3	LESS THAN 30MPH	BACK OF FOOTPATH	800	SINGLE ARM	NOT APPLICABLE	RIGID COLUMN	URBIS	AXIA 2 S1	PETITJEAN	SHEET STEEL	6	GALVANISED	DAER	
46101367	SOUTH SIDE	Winteringham Parish	492969.84	422019.08	6	7005	00193519	01/04/1982 00:00	1	3	LESS THAN 30MPH	BACK OF FOOTPATH	800	SINGLE ARM	NOT APPLICABLE	RIGID COLUMN	URBIS	AXIA 2 S1	PETITJEAN	SHEET STEEL	6	GALVANISED	DAER	
46101368	SOUTH STREET	Barnetby Le Wold Parish	505790.29	409214.3	1	7000	00193520	01/04/2016 00:00	3	2	LESS THAN 30MPH	ON POLE	300	SINGLE ARM	NOT APPLICABLE	POLE MOUNTED	URBIS	AXIA 2 S1	WOODEN PO	WOOD	5	NOT APPLICABI	Not Applicable	
46101368	SOUTH STREET	Barnetby Le Wold Parish	505835.15	409199.55	2	7001	00193521	01/04/2016 00:00	3	2	LESS THAN 30MPH	ON POLE	300	SINGLE ARM	NOT APPLICABLE	POLE MOUNTED	URBIS	AXIA 2 S1	WOODEN PO	WOOD	5	NOT APPLICABI	Not Applicable	
46101368	SOUTH STREET	Barnetby Le Wold Parish	505884.78	409174.24	3	7002	00193522	01/04/2015 00:00	3	2	LESS THAN 30MPH	ON POLE	500	SINGLE ARM	NOT APPLICABLE	POLE MOUNTED	URBIS	AXIA 2 S1	WOODEN PO	WOOD	5	NOT APPLICABI	Not Applicable	
46101368	SOUTH STREET	Barnetby Le Wold Parish	505924.84	409155.25	4	7003	00193523	01/04/2016 00:00	3	2	LESS THAN 30MPH	ON POLE	300	SINGLE ARM	NOT APPLICABLE	POLE MOUNTED	URBIS	AXIA 2 S1	WOODEN PO	WOOD	4	NOT APPLICABI	Not Applicable	
46101368	SOUTH STREET	Barnetby Le Wold Parish	505953.34	409136.55	5	7004	00193524	01/04/2016 00:00	3	2	LESS THAN 30MPH	ON POLE	300	SINGLE ARM	NOT APPLICABLE	POLE MOUNTED	URBIS	AXIA 2 S1	WOODEN PO	WOOD	5	NOT APPLICABI	Not Applicable	
46101368	SOUTH STREET	Barnetby Le Wold Parish	505944.2	409176.69	6	7005	00193525	02/10/2018 00:00	3	2	LESS THAN 30MPH	VERGE	0	POST TOP	NOT APPLICABLE	RIGID COLUMN	URBIS	AXIA 2 S1	MALLATITE	TUBULAR STEEL	6	GALVANISED	TUBULAR	
46101368	SOUTH STREET	Barnetby Le Wold Parish	505957.1	409205.84	7	7006	00193526	01/04/1985 00:00	3	2	LESS THAN 30MPH	VERGE	300	SINGLE ARM	NOT APPLICABLE	RIGID COLUMN	URBIS	AXIA 2 S1	PETITJEAN	SHEET STEEL	5	GALVANISED	DAER	
46101369	SOUTH STREET	Owston Ferry Parish	481287.06	399874.64	1	7000	00193527	29/11/2024 00:00	6	2	LESS THAN 30MPH	BACK OF FOOTPATH	300	SINGLE ARM	NOT APPLICABLE	RIGID COLUMN	URBIS	AXIA 2 S1	MALLATITE	TUBULAR STEEL	6	GALVANISED	TUBULAR	
46101369	SOUTH STREET	Owston Ferry Parish	481321.48	399592.77	10	7009	00193536	01/04/1990 00:00	6	2	LESS THAN 30MPH	BACK OF FOOTPATH	300	SINGLE ARM	NOT APPLICABLE	RIGID COLUMN	URBIS	AXIA 2 S1	PETITJEAN	SHEET STEEL	5	GALVANISED	DAER	
46101369	SOUTH STREET	Owston Ferry Parish	481329.76	399554.41	11	7010	00193537	01/04/1990 00:00	6	2	LESS THAN 30MPH	BACK OF FOOTPATH	300	SINGLE ARM	NOT APPLICABLE	RIGID COLUMN	URBIS	AXIA 2 S1	PETITJEAN	SHEET STEEL	5	GALVANISED	DAER	
46101369	SOUTH STREET	Owston Ferry Parish	481337.16	399522.38	12	7011	00193538	01/04/1990 00:00	6	2	LESS THAN 30MPH	BACK OF FOOTPATH	300	SINGLE ARM	NOT APPLICABLE	RIGID COLUMN	URBIS	AXIA 2 S1	PETITJEAN	SHEET STEEL	5	GALVANISED	DAER	
46101369	SOUTH STREET	Owston Ferry Parish	481346.9	399491.72	13	7012	00193539	01/04/1990 00:00	6	2	LESS THAN 30MPH	BACK OF FOOTPATH	300	SINGLE ARM	NOT APPLICABLE	RIGID COLUMN	URBIS	AXIA 2 S1	PETITJEAN	SHEET STEEL	5	GALVANISED	DAER	
46101369	SOUTH STREET	Owston Ferry Parish	481357.95	399467.09	14	7013	00193540	01/04/1990 00:00	6	2	LESS THAN 30MPH	BACK OF FOOTPATH	300	SINGLE ARM	NOT APPLICABLE	RIGID COLUMN	URBIS	AXIA 2 S1	PETITJEAN	SHEET STEEL	5	GALVANISED	DAER	
46101369	SOUTH STREET	Owston Ferry Parish	481372.07	399433.28	15	7014	00193541	25/01/2017 00:00	6	2	LESS THAN 30MPH	BACK OF FOOTPATH	0	POST TOP	NOT APPLICABLE	RIGID COLUMN	URBIS	AXIA 2 S1	MALLATITE	TUBULAR STEEL	6	GALVANISED	TUBULAR	
46101369	SOUTH STREET	Owston Ferry Parish	481400.24	399407.95	16FP	7015	00193542	01/04/1990 00:00	6	2	LESS THAN 30MPH	BACK OF FOOTPATH	300	SINGLE ARM	NOT APPLICABLE	RIGID COLUMN	URBIS	AXIA 2 S1	PETITJEAN	SHEET STEEL	5	GALVANISED	DAER	
46101369	SOUTH STREET	Owston Ferry Parish	481412.33	399381.23	17	7016	00193543	01/04/1990 00:00	6	2	LESS THAN 30MPH	BACK OF FOOTPATH	300	SINGLE ARM	NOT APPLICABLE	RIGID COLUMN	URBIS	AXIA 2 S1	PETITJEAN	SHEET STEEL	5	GALVANISED	DAER	
46101369	SOUTH STREET	Owston Ferry Parish	481424.99	399347.17	18	7017	00193544	01/04/1990 00:00	6	2	LESS THAN 30MPH	VERGE	300	SINGLE ARM	NOT APPLICABLE	RIGID COLUMN	URBIS	AXIA 2 S1	PETITJEAN	SHEET STEEL	5	GALVANISED	DAER	
46101369	SOUTH STREET	Owston Ferry Parish	481282.93	399839.56	2	7001	00193528	28/08/2024 00:00	6	2	LESS THAN 30MPH	BACK OF FOOTPATH	300	SINGLE ARM	NOT APPLICABLE	RIGID COLUMN	URBIS	AXIA 2 S1	MALLATITE	TUBULAR STEEL	6	GALVANISED	TUBULAR	
46101369	SOUTH STREET	Owston Ferry Parish	481280.5	399807.37	3	7002	00193529	28/08/2024 00:00	6	2	LESS THAN 30MPH	BACK OF FOOTPATH	300	SINGLE ARM	NOT APPLICABLE	RIGID COLUMN	URBIS	AXIA 2 S1	MALLATITE	TUBULAR STEEL	6	GALVANISED	TUBULAR	
46101369	SOUTH STREET	Owston Ferry Parish	481281.11	399783.2	4	7003	00193530	28/08/2024 00:00	6	2	LESS THAN 30MPH	BACK OF FOOTPATH	300	SINGLE ARM	NOT APPLICABLE	RIGID COLUMN	URBIS	AXIA 2 S1	MALLATITE	TUBULAR STEEL	6	GALVANISED	TUBULAR	
46101369	SOUTH STREET	Owston Ferry Parish	481282.81	399737.85	5	7004	00193531	28/08/2024 00:00	6	2	LESS THAN 30MPH	BACK OF FOOTPATH	300	SINGLE ARM	NOT APPLICABLE	RIGID COLUMN	URBIS	AXIA 2 S1	MALLATITE	TUBULAR STEEL	6	GALVANISED	TUBULAR	
46101369	SOUTH STREET	Owston Ferry Parish	481287.21	399710.35	6	7005	00193532	01/04/1990 00:00	6	2	LESS THAN 30MPH	BACK OF FOOTPATH	300	SINGLE ARM	NOT APPLICABLE	RIGID COLUMN	URBIS	AXIA 2 S1	PETITJEAN	SHEET STEEL	5	GALVANISED	DAER	
46101369	SOUTH STREET	Owston Ferry Parish	481294.55	399683.55	7	7006	00193533	01/04/1990 00:00	6	2	LESS THAN 30MPH	BACK OF FOOTPATH	300	SINGLE ARM	NOT APPLICABLE	RIGID COLUMN	URBIS	AXIA 2 S1	PETITJEAN	SHEET STEEL	5	GALVANISED	DAER	
46101369	SOUTH STREET	Owston Ferry Parish	481303.57	399648.94	8	7007	00193534	01/04/1990 00:00	6	2	LESS THAN 30MPH	BACK OF FOOTPATH	300	SINGLE ARM	NOT APPLICABLE	RIGID COLUMN	URBIS	AXIA 2 S1	PETITJEAN	SHEET STEEL	5	GALVANISED	DAER	
46101369	SOUTH STREET	Owston Ferry Parish	481312.26	399623.33	9	7008	00193535	01/04/1990 00:00	6	2	LESS THAN 30MPH	BACK OF FOOTPATH	300	SINGLE ARM	NOT APPLICABLE	RIGID COLUMN	URBIS	AXIA 2 S1	PETITJEAN	SHEET STEEL	5	GALVANISED	DAER	
46101370	SOUTH STREET	Roxby Cum Risby Parish	491902.14	416753.39	1	7000	00193545	01/04/1980 00:00	1	1	LESS THAN 30MPH	WALL	300	SINGLE ARM	NOT APPLICABLE	WALL MOUNTED	URBIS	AXIA 2 S1	WALL MOUN	NOT APPLICABLE	5	NOT APPLICABI	Not Applicable	
46101370	SOUTH STREET	Roxby Cum Risby Parish	492111.93	416956.37	10	7009	00193554	01/04/1980 00:00	1	1	LESS THAN 30MPH	ON POLE	300	SINGLE ARM	NOT APPLICABLE	POLE MOUNTED	URBIS	AXIA 2 S1	WOODEN PO	WOOD	5	NOT APPLICABI	Not Applicable	
46101370	SOUTH STREET	Roxby Cum Risby Parish	492132.68	416969.37	11	7010	00193555	01/04/1980 00:00	1	1	LESS THAN 30MPH	BACK OF FOOTPATH	0	POST TOP	NOT APPLICABLE	RIGID COLUMN	URBIS	AXIA 2 S1	PETITJEAN	SHEET STEEL	5	GALVANISED	NIDD	
46101370	SOUTH STREET	Roxby Cum Risby Parish	492151.23	416983.08	12	7011	00193556	01/04/1980 00:00	1	1	LESS THAN 30MPH	ON POLE	300	SINGLE ARM	NOT APPLICABLE	POLE MOUNTED	URBIS	AXIA 2 S1	WOODEN PO	WOOD	5	NOT APPLICABI	Not Applicable	
46101370	SOUTH STREET	Roxby Cum Risby Parish	492168.33	417001.5	13	7012	00193557	01/04/1980 00:00	1	1	LESS THAN 30MPH	VERGE	0	POST TOP	NOT APPLICABLE	RIGID COLUMN	URBIS	AXIA 2 S1	PETITJEAN	SHEET STEEL	5	GALVANISED	NIDD	
46101370	SOUTH STREET	Roxby Cum Risby Parish	491925.63	416790.01	2	7001	00193546	01/04/1980 00:00	1	1	LESS THAN 30MPH	ON POLE	300	SINGLE ARM	NOT APPLICABLE	POLE MOUNTED	URBIS	AXIA 2 S1	WOODEN PO	WOOD	5	NOT APPLICABI	Not Applicable	
46101370	SOUTH STREET	Roxby Cum Risby Parish	491937.88	416808.64	3	7002	00193547	01/04/1980 00:00	1	1	LESS THAN 30MPH	ON POLE	300	SINGLE ARM	NOT APPLICABLE	POLE MOUNTED	URBIS	AXIA 2 S1	WOODEN PO	WOOD	5	NOT APPLICABI	Not Applicable	
46101370	SOUTH STREET	Roxby Cum Risby Parish	491969.68	416835.13	4	7003	00193548	01/04/1980 00:00	1	1	LESS THAN 30MPH	ON POLE	300	SINGLE ARM	NOT APPLICABLE	POLE MOUNTED	URBIS	AXIA 2 S1	WOODEN PO	WOOD	5	NOT APPLICABI	Not Applicable	
46101370	SOUTH STREET	Roxby Cum Risby Parish	491999.65	416858.77	5	7004	00193549	01/04/1980 00:00	1	1	LESS THAN 30MPH	ON POLE	300	SINGLE ARM	NOT APPLICABLE	POLE MOUNTED	URBIS	AXIA 2 S1	WOODEN PO	WOOD	5	NOT APPLICABI	Not Applicable	
46101370	SOUTH STREET	Roxby Cum Risby Parish	492010.13	416883.23	6	7005	00193550	01/04/1980 00:00	1	1	LESS THAN 30MPH	ON POLE	300	SINGLE ARM	NOT APPLICABLE	POLE MOUNTED	URBIS	AXIA 2 S1	WOODEN PO	WOOD	5	NOT APPLICABI	Not Applicable	
46101370	SOUTH STREET	Roxby Cum Risby Parish	492014.7	416903.66	7	7006	00193551	01/04/1980 00:00	1	1	LESS THAN 30MPH	VERGE	0	POST TOP	NOT APPLICABLE	RIGID COLUMN	URBIS	AXIA 2 S1	PETITJEAN	SHEET STEEL	5	GALVANISED	NIDD	
46101370	SOUTH STREET	Roxby Cum Risby Parish	492038.34	416919.67	8	7007	00193552	01/04/1990 00:00	1	1	LESS THAN 30MPH	ON POLE	300	SINGLE ARM	NOT APPLICABLE	POLE MOUNTED	URBIS	AXIA 2 S1	WOODEN PO	WOOD	5	NOT APPLICABI	Not Applicable	
46101370	SOUTH STREET	Roxby Cum Risby Parish	492073.88	416938.03	9	7008	00193553	01/04/1999 00:00	1	1	LESS THAN 30MPH	ON POLE	300	SINGLE ARM	NOT APPLICABLE	POLE MOUNTED	URBIS	AXIA 2 S1	WOODEN PO	WOOD	5	NOT APPLICABI	Not Applicable	
46101371	SOUTH STREET	West Butterwick Parish	483523.62	405765.52	1	7000	00193558	01/04/2016 00:00	6	4	LESS THAN 30MPH	BACK OF FOOTPATH	0	POST TOP	NOT APPLICABLE	RIGID COLUMN	URBIS	AXIA 2 S1	MALLATITE	TUBULAR STEEL	6	GALVANISED	TUBULAR	
46101371	SOUTH STREET	West Butterwick Parish	483506.96	405745.09	2	7001	00193559	01/04/2005 00:00	6	4	LESS THAN 30MPH	BACK OF FOOTPATH	0	POST TOP	NOT APPLICABLE	RIGID COLUMN	URBIS	AXIA 2 S1	MALLATITE	TUBULAR STEEL	5	GALVANISED	STEPPED TUBULAR	
46101371	SOUTH STREET	West Butterwick Parish	483497.67	405719.75	3	7002	00193560	01/04/1965 00:00	6	4	LESS THAN 30MPH	ON POLE	300	SINGLE ARM	NOT APPLICABLE	POLE MOUNTED	URBIS	AXIA 2 S1	WOODEN PO	WOOD	5	NOT APPLICABI	Not Applicable	
46101371	SOUTH STREET	West Butterwick Parish	483496.96	405693.27	4	7003	00193561	01/04/1965 00:00	6	4	LESS THAN 30MPH	ON POLE	300	SINGLE ARM	NOT APPLICABLE	POLE MOUNTED	URBIS	AXIA 2 S1	WOODEN PO	WOOD	5	NOT APPLICABI	Not Applicable	
46101371	SOUTH STREET	West Butterwick Parish	483504.06	405661.08	5	7004	00193562	01/04/1965 00:00	6	4	LESS THAN 30MPH	ON POLE	300	SINGLE ARM	NOT APPLICABLE	POLE MOUNTED	URBIS	AXIA 2 S1	WOODEN PO	WOOD	5	NOT APPLICABI	Not Applicable	
46101371	SOUTH STREET	West Butterwick Parish	483483.02	405640.81	6	7005	00193563	05/10/2018 00:00	6	4	LESS THAN 30MPH	BACK OF FOOTPATH	0	POST TOP	NOT APPLICABLE	RIGID COLUMN	URBIS	AXIA 2 S1	MALLATITE	TUBULAR STEEL	6	GALVANISED	TUBULAR	
46101371	SOUTH STREET	West Butterwick Parish	483466.35	405613.73	7	7006	00193564	01/04/1965 00:00	6	4	LESS THAN 30MPH	ON POLE	300	SINGLE ARM	NOT APPLICABLE	POLE MOUNTED	URBIS	AXIA 2 S1	WOODEN PO	WOOD	5	NOT APPLICABI	Not Applicable	
46101372	SOUTH STREET	Winterton Parish	492827.21	418401.35	1	7000	00193565	01/04/1988 00:00	1	1	LESS THAN 30MPH	ON POLE	300	SINGLE ARM	NOT APPLICABLE	POLE MOUNTED	URBIS	AXIA 2 S1	WOODEN PO	WOOD	5	NOT APPLICABI	Not Applicable	
46101372	SOUTH STREET	Winterton Parish	492830.11	418361.41	2	7001	00193566	01/04/1988 00:00	1	1	LESS THAN 30MPH	ON POLE	300	SINGLE ARM	NOT APPLICABLE	POLE MOUNTED	URBIS	AXIA 2 S1	WOODEN PO	WOOD	5	NOT APPLICABI	Not Applicable	
46101372	SOUTH STREET	Winterton Parish	492832.84	418331.14	3	7002	00193567	01/04/2015 00:00	1	1	LESS THAN 30MPH	ON POLE	300	SINGLE ARM	NOT APPLICABLE	POLE MOUNTED	URBIS	AXIA 2 S1	WOODEN PO	WOOD	5	NOT APPLICABI	Not Applicable	
46101373	SOUTH VIEW AVENUE	Brigg Parish	500297.4	408051.39	1	7000	00193568	01/04/1993 00:00	2	3	LESS THAN 30MPH	BACK OF FOOTPATH	800	SINGLE ARM	NOT APPLICABLE	RIGID COLUMN	URBIS	AXIA 2 S1	PETITJEAN	SHEET STEEL	6	GALVANISED	DAER	
46101373	SOUTH VIEW AVENUE	Brigg Parish	500498.87	408063.41	10	7009	00193577	01/04/1993 00:00	2	3	LESS THAN 30MPH	BACK OF FOOTPATH	800	SINGLE ARM	NOT APPLICABLE	RIGID COLUMN	URBIS	AXIA 2 S1	PETITJEAN	SHEET STEEL	6	GALVANISED	DAER	
46101373	SOUTH VIEW AVENUE	Brigg Parish	500526.23	408071.49	11	7010	00193578	01/04/1993 00:00	2	3	LESS THAN 30MPH	BACK OF FOOTPATH	800	SINGLE ARM	NOT APPLICABLE	RIGID COLUMN	URBIS	AXIA 2 S1	PETITJEAN	SHEET STEEL	6	GALVANISED	DAER	
46101373	SOUTH VIEW AVENUE	Brigg Parish	500551.45	408079.16	12	7011	00193579	01/04/1993 00:00	2	3	LESS THAN 30MPH	BACK OF FOOTPATH	800	SINGLE ARM	NOT APPLICABLE	RIGID COLUMN	URBIS	AXIA 2 S1	PETITJEAN	SHEET STEEL	6	GALVANISED	DAER	
46101373	SOUTH VIEW AVENUE	Brigg Parish	500575.63	408085.98	13	7012	00193580	01/04/1993 00:00	2	3	LESS THAN 30MPH	BACK OF FOOTPATH	800	SINGLE ARM	NOT APPLICABLE	RIGID COLUMN	URBIS	AXIA 2 S1	PETITJEAN	SHEET STEEL	6	GALVANISED	DAER	
46101373	SOUTH VIEW AVENUE	Brigg Parish	500604.33	408094.91	14	7013	00193581	01/04/1993 00:00	2	3	LESS THAN 30MPH	BACK OF FOOTPATH	800	SINGLE ARM	NOT APPLICABLE	RIGID COLUMN	URBIS	AXIA 2 S1	PETITJEAN	SHEET STEEL	6	GALVANISED	DAER	
46101373	SOUTH VIEW AVENUE	Brigg Parish	500601.86	408146.89	15	7014	00193582	01/04/1993 00:00	2	3	LESS THAN 30MPH	BACK OF FOOTPATH	800	SINGLE ARM	NOT APPLICABLE	RIGID COLUMN	URBIS	AXIA 2 S1	PETITJEAN	SHEET STEEL	6	GALVANISED	DAER	
46101373	SOUTH VIEW AVENUE	Brigg Parish	500629.12	408101.9	16	7015	00193583	01/04/1993 00:00	2	3	LESS THAN 30MPH	BACK OF FOOTPATH	800	SINGLE ARM	NOT APPLICABLE	RIGID COLUMN	URBIS	AXIA 2 S1	PETITJEAN	SHEET STEEL	6	GALVANISED	DAER	
46101373	SOUTH VIEW AVENUE	Brigg Parish	500313.46	408031.59	2	7001	00193569	01/04/1993 00:00	2	3	LESS THAN 30MPH	BACK OF FOOTPATH	800	SINGLE ARM	NOT APPLICABLE	RIG

46101395	ST BARNABAS ROAD	Barnetby Le Wold Parish	505938.51	409716.01	9	7008	00193734	01/04/2016 00:00	3	2	LESS THAN 30MPH	ON POLE	300	SINGLE ARM	NOT APPLICABLE	POLE MOUNTED	URBIS	AXIA 2 S1	WOODEN PO	WOOD	5	NOT APPLICABI	Not Applicable
46101396	ST BERNARDS CLOSE	Broughton Parish	496015.02	409169.47	1	7000	00193750	01/04/2010 00:00	1	1	LESS THAN 30MPH	BACK OF FOOTPATH	0	POST TOP	NOT APPLICABLE	RIGID COLUMN	URBIS	AXIA 2 S1	MALLATITE	TUBULAR STEEL	6	GALVANISED	TUBULAR
46101396	ST BERNARDS CLOSE	Broughton Parish	496038.12	409187.75	2	7001	00193751	01/04/2008 00:00	1	1	LESS THAN 30MPH	BACK OF FOOTPATH	0	POST TOP	NOT APPLICABLE	RIGID COLUMN	URBIS	AXIA 2 S1	BRITISH STEI	TUBULAR STEEL	6	GALVANISED	ASH
46101396	ST BERNARDS CLOSE	Broughton Parish	496070.98	409195.43	3	7002	00193752	13/04/2016 00:00	1	1	LESS THAN 30MPH	BACK OF FOOTPATH	0	POST TOP	NOT APPLICABLE	RIGID COLUMN	URBIS	AXIA 2 S1	MALLATITE	TUBULAR STEEL	6	GALVANISED	TUBULAR
46101396	ST BERNARDS CLOSE	Broughton Parish	496088.05	409216.18	4	7003	00193753	13/04/2016 00:00	1	1	LESS THAN 30MPH	BACK OF FOOTPATH	0	POST TOP	NOT APPLICABLE	RIGID COLUMN	URBIS	AXIA 2 S1	MALLATITE	TUBULAR STEEL	6	GALVANISED	TUBULAR
46101396	ST BERNARDS CLOSE	Broughton Parish	496118.54	409233.79	5	7004	00193754	28/02/2019 00:00	1	1	LESS THAN 30MPH	BACK OF FOOTPATH	0	POST TOP	NOT APPLICABLE	RIGID COLUMN	URBIS	AXIA 2 S1	MALLATITE	TUBULAR STEEL	6	GALVANISED	TUBULAR
46101396	ST BERNARDS CLOSE	Broughton Parish	496145.57	409249.48	6	7005	00193755	28/02/2019 00:00	1	1	LESS THAN 30MPH	BACK OF FOOTPATH	0	POST TOP	NOT APPLICABLE	RIGID COLUMN	URBIS	AXIA 2 S1	MALLATITE	TUBULAR STEEL	6	GALVANISED	TUBULAR
46101396	ST BERNARDS CLOSE	Broughton Parish	496171.65	409264.01	7	7006	00193756	28/02/2019 00:00	1	1	LESS THAN 30MPH	BACK OF FOOTPATH	0	POST TOP	NOT APPLICABLE	RIGID COLUMN	URBIS	AXIA 2 S1	MALLATITE	TUBULAR STEEL	6	GALVANISED	TUBULAR
46101397	ST BOTOLPHS ROAD	Scunthorpe	490276.21	409396.89	1	7000	00193757	01/04/1993 00:00	3	2	LESS THAN 30MPH	BACK OF FOOTPATH	300	SINGLE ARM	NOT APPLICABLE	RIGID COLUMN	URBIS	AXIA 2 S1	PETITJEAN	SHEET STEEL	5	GALVANISED	DAER
46101397	ST BOTOLPHS ROAD	Scunthorpe	490306.99	409400.76	2	7001	00193758	01/04/1993 00:00	3	2	LESS THAN 30MPH	BACK OF FOOTPATH	300	SINGLE ARM	NOT APPLICABLE	RIGID COLUMN	URBIS	AXIA 2 S1	PETITJEAN	SHEET STEEL	5	GALVANISED	DAER
46101397	ST BOTOLPHS ROAD	Scunthorpe	490327.65	409416.45	3	7002	00193759	22/03/2019 00:00	3	2	LESS THAN 30MPH	BACK OF FOOTPATH	0	POST TOP	NOT APPLICABLE	RIGID COLUMN	URBIS	AXIA 2 S1	MALLATITE	TUBULAR STEEL	6	GALVANISED	TUBULAR
46101397	ST BOTOLPHS ROAD	Scunthorpe	490353.06	409421.05	4	7003	00193760	01/04/1993 00:00	3	2	LESS THAN 30MPH	FRONT OF FOOTPATH	300	SINGLE ARM	NOT APPLICABLE	RIGID COLUMN	URBIS	AXIA 2 S1	PETITJEAN	SHEET STEEL	5	GALVANISED	DAER
46101397	ST BOTOLPHS ROAD	Scunthorpe	490373.28	409436.24	5	7004	00193761	01/04/1993 00:00	3	2	LESS THAN 30MPH	BACK OF FOOTPATH	300	SINGLE ARM	NOT APPLICABLE	RIGID COLUMN	URBIS	AXIA 2 S1	PETITJEAN	SHEET STEEL	5	GALVANISED	DAER
46101397	ST BOTOLPHS ROAD	Scunthorpe	490398.27	409439.37	6	7005	00193762	01/04/1993 00:00	3	2	LESS THAN 30MPH	FRONT OF FOOTPATH	300	SINGLE ARM	NOT APPLICABLE	RIGID COLUMN	URBIS	AXIA 2 S1	PETITJEAN	SHEET STEEL	5	GALVANISED	DAER
46101397	ST BOTOLPHS ROAD	Scunthorpe	490418.16	409451.7	7	7006	00193763	01/04/1993 00:00	3	2	LESS THAN 30MPH	BACK OF FOOTPATH	300	SINGLE ARM	NOT APPLICABLE	RIGID COLUMN	URBIS	AXIA 2 S1	PETITJEAN	SHEET STEEL	5	GALVANISED	DAER
46101398	ST CATHERINES CRESCENT	Bottesford Parish	489353.82	407652.99	1	7000	00193764	01/04/1993 00:00	3	1	LESS THAN 30MPH	BACK OF FOOTPATH	300	SINGLE ARM	NOT APPLICABLE	RIGID COLUMN	URBIS	AXIA 2 S1	PETITJEAN	SHEET STEEL	5	GALVANISED	DAER
46101398	ST CATHERINES CRESCENT	Bottesford Parish	489357.04	407683.9	2	7001	00193765	01/04/1993 00:00	3	1	LESS THAN 30MPH	BACK OF FOOTPATH	300	SINGLE ARM	NOT APPLICABLE	RIGID COLUMN	URBIS	AXIA 2 S1	PETITJEAN	SHEET STEEL	5	GALVANISED	DAER
46101398	ST CATHERINES CRESCENT	Bottesford Parish	489347.64	407707.56	3	7002	00193766	01/04/1993 00:00	3	1	LESS THAN 30MPH	BACK OF FOOTPATH	300	SINGLE ARM	NOT APPLICABLE	RIGID COLUMN	URBIS	AXIA 2 S1	PETITJEAN	SHEET STEEL	5	GALVANISED	DAER
46101399	ST CHAD	Barrow upon Humber Parish	507343.72	421617.08	1	7000	00193767	01/10/2009 00:00	4	1	LESS THAN 30MPH	BACK OF FOOTPATH	0	POST TOP	NOT APPLICABLE	RIGID COLUMN	URBIS	AXIA 2 S1	MALLATITE	TUBULAR STEEL	6	GALVANISED	TUBULAR
46101399	ST CHAD	Barrow upon Humber Parish	507348.35	421651.93	2	7001	00193768	01/10/2009 00:00	4	1	LESS THAN 30MPH	BACK OF FOOTPATH	0	POST TOP	NOT APPLICABLE	RIGID COLUMN	URBIS	AXIA 2 S1	MALLATITE	TUBULAR STEEL	6	GALVANISED	TUBULAR
46101399	ST CHAD	Barrow upon Humber Parish	507360.96	421691.94	3	7002	00193769	01/10/2009 00:00	4	1	LESS THAN 30MPH	BACK OF FOOTPATH	0	POST TOP	NOT APPLICABLE	RIGID COLUMN	URBIS	AXIA 2 S1	MALLATITE	TUBULAR STEEL	6	GALVANISED	TUBULAR
46101399	ST CHAD	Barrow upon Humber Parish	507364.77	421719.1	4	7003	00193770	01/04/1973 00:00	4	1	LESS THAN 30MPH	BACK OF FOOTPATH	0	POST TOP	MID GREY	RIGID COLUMN	URBIS	AXIA 2 S1	PETITJEAN	SHEET STEEL	5	PAINTED	NIDD
46101399	ST CHAD	Barrow upon Humber Parish	507368.96	421750.54	5	7004	00193771	01/04/1973 00:00	4	1	LESS THAN 30MPH	BACK OF FOOTPATH	0	POST TOP	MID GREY	RIGID COLUMN	URBIS	AXIA 2 S1	PETITJEAN	SHEET STEEL	5	PAINTED	NIDD
46101399	ST CHAD	Barrow upon Humber Parish	507373.4	421780.13	6	7005	00193772	01/04/1973 00:00	4	1	LESS THAN 30MPH	BACK OF FOOTPATH	0	POST TOP	MID GREY	RIGID COLUMN	URBIS	AXIA 2 S1	PETITJEAN	SHEET STEEL	5	PAINTED	NIDD
46101399	ST CHAD	Barrow upon Humber Parish	507376.65	421800.57	7	7006	00193773	01/04/1973 00:00	4	1	LESS THAN 30MPH	ON POLE	500	SINGLE ARM	NOT APPLICABLE	POLE MOUNTED	URBIS	AXIA 2 S1	WOODEN PO	WOOD	5	NOT APPLICABI	Not Applicable
46101400	ST CLARES WALK	Brigg Parish	500148.16	407141.9	1	7000	00193774	01/04/2017 00:00	2	3	LESS THAN 30MPH	BACK OF FOOTPATH	0	POST TOP	NOT APPLICABLE	RIGID COLUMN	HOLOPHANE	VMAX V1 L024	VALMONT ST	TUBULAR STEEL	6	GALVANISED	TUBULAR
46101400	ST CLARES WALK	Brigg Parish	500125.32	407118.81	2	7001	00193775	01/04/2017 00:00	2	3	LESS THAN 30MPH	BACK OF FOOTPATH	0	POST TOP	NOT APPLICABLE	RIGID COLUMN	HOLOPHANE	VMAX V1 L024	VALMONT ST	TUBULAR STEEL	6	GALVANISED	TUBULAR
46101400	ST CLARES WALK	Brigg Parish	500114.55	407092.1	3	7002	00193776	01/04/2017 00:00	2	3	LESS THAN 30MPH	BACK OF FOOTPATH	0	POST TOP	NOT APPLICABLE	RIGID COLUMN	HOLOPHANE	VMAX V1 L024	VALMONT ST	TUBULAR STEEL	6	GALVANISED	TUBULAR
46101400	ST CLARES WALK	Brigg Parish	500119.92	407060.94	4	7003	00193777	01/04/2017 00:00	2	3	LESS THAN 30MPH	VERGE	0	POST TOP	NOT APPLICABLE	RIGID COLUMN	HOLOPHANE	VMAX V1 L024	VALMONT ST	TUBULAR STEEL	6	GALVANISED	TUBULAR
46101400	ST CLARES WALK	Brigg Parish	500117.27	407032.29	5	7004	00193778	01/04/2017 00:00	2	3	LESS THAN 30MPH	VERGE	0	POST TOP	NOT APPLICABLE	RIGID COLUMN	HOLOPHANE	VMAX V1 L024	VALMONT ST	TUBULAR STEEL	6	GALVANISED	TUBULAR
46101400	ST CLARES WALK	Brigg Parish	500107.4	407013.37	6	7005	00193779	01/04/2017 00:00	2	3	LESS THAN 30MPH	VERGE	0	POST TOP	NOT APPLICABLE	RIGID COLUMN	HOLOPHANE	VMAX V1 L024	VALMONT ST	TUBULAR STEEL	6	GALVANISED	TUBULAR
46101400	ST CLARES WALK	Brigg Parish	500116	406986	7	7006	04200074	01/04/2017 00:00	2	3	LESS THAN 30MPH	VERGE	0	POST TOP	NOT APPLICABLE	RIGID COLUMN	HOLOPHANE	VMAX V1 L024	VALMONT ST	TUBULAR STEEL	6	GALVANISED	TUBULAR
46101400	ST CLARES WALK	Brigg Parish	500111	406954	8	7007	04200075	01/04/2017 00:00	2	3	LESS THAN 30MPH	BACK OF FOOTPATH	0	POST TOP	NOT APPLICABLE	RIGID COLUMN	HOLOPHANE	VMAX V1 L024	VALMONT ST	TUBULAR STEEL	6	GALVANISED	TUBULAR
46101401	ST CRISPINS CLOSE	North Killingholme Parish	514531.74	417357.26	1	7000	00193780	04/06/2019 00:00	4	1	LESS THAN 30MPH	BACK OF FOOTPATH	0	POST TOP	NOT APPLICABLE	RIGID COLUMN	URBIS	AXIA 2 S1	MALLATITE	TUBULAR STEEL	6	GALVANISED	TUBULAR
46101401	ST CRISPINS CLOSE	North Killingholme Parish	514568.81	417358.64	2	7001	00193781	04/06/2019 00:00	4	1	LESS THAN 30MPH	BACK OF FOOTPATH	0	POST TOP	NOT APPLICABLE	RIGID COLUMN	URBIS	AXIA 2 S1	MALLATITE	TUBULAR STEEL	6	GALVANISED	TUBULAR
46101401	ST CRISPINS CLOSE	North Killingholme Parish	514593.9	417350.26	3	7002	00193782	04/06/2019 00:00	4	1	LESS THAN 30MPH	BACK OF FOOTPATH	0	POST TOP	NOT APPLICABLE	RIGID COLUMN	URBIS	AXIA 2 S1	MALLATITE	TUBULAR STEEL	6	GALVANISED	TUBULAR
46101401	ST CRISPINS CLOSE	North Killingholme Parish	514622.29	417353.1	4	7003	00193783	04/06/2019 00:00	4	1	LESS THAN 30MPH	BACK OF FOOTPATH	0	POST TOP	NOT APPLICABLE	RIGID COLUMN	URBIS	AXIA 2 S1	MALLATITE	TUBULAR STEEL	6	GALVANISED	TUBULAR
46101401	ST CRISPINS CLOSE	North Killingholme Parish	514643.58	417363.74	5	7004	00193784	04/06/2019 00:00	4	1	LESS THAN 30MPH	BACK OF FOOTPATH	0	POST TOP	NOT APPLICABLE	RIGID COLUMN	URBIS	AXIA 2 S1	MALLATITE	TUBULAR STEEL	6	GALVANISED	TUBULAR
46101402	ST DAVIDS CRESCENT	Bottesford Parish	488266.23	407236.14	1	7000	00193785	01/04/1980 00:00	3	1	LESS THAN 30MPH	VERGE	0	POST TOP	NOT APPLICABLE	RIGID COLUMN	PHILIPS	STELA LONG 12 LED	MALLATITE	SHEET STEEL	5	GALVANISED	STEPPED TUBULAR
46101402	ST DAVIDS CRESCENT	Bottesford Parish	488176.25	407096.04	10	7011	00193796	01/04/1989 00:00	3	1	LESS THAN 30MPH	BACK OF FOOTPATH	0	POST TOP	NOT APPLICABLE	RIGID COLUMN	PHILIPS	STELA LONG 12 LED	PETITJEAN	TUBULAR STEEL	5	GALVANISED	METRO
46101402	ST DAVIDS CRESCENT	Bottesford Parish	488180.8	407072.9	11	7012	00193797	01/04/1989 00:00	3	1	LESS THAN 30MPH	BACK OF FOOTPATH	0	POST TOP	NOT APPLICABLE	RIGID COLUMN	PHILIPS	STELA LONG 12 LED	PETITJEAN	TUBULAR STEEL	5	GALVANISED	METRO
46101402	ST DAVIDS CRESCENT	Bottesford Parish	488206.9	407078.9	12	7013	00193798	01/04/1989 00:00	3	1	LESS THAN 30MPH	BACK OF FOOTPATH	0	POST TOP	NOT APPLICABLE	RIGID COLUMN	PHILIPS	STELA LONG 12 LED	PETITJEAN	TUBULAR STEEL	5	GALVANISED	METRO
46101402	ST DAVIDS CRESCENT	Bottesford Parish	488238.5	407081.7	13	7014	00193799	01/04/1989 00:00	3	1	LESS THAN 30MPH	BACK OF FOOTPATH	0	POST TOP	NOT APPLICABLE	RIGID COLUMN	PHILIPS	STELA LONG 12 LED	PETITJEAN	TUBULAR STEEL	5	GALVANISED	METRO
46101402	ST DAVIDS CRESCENT	Bottesford Parish	488244.3	407110.2	14	7015	00193800	01/04/1989 00:00	3	1	LESS THAN 30MPH	BACK OF FOOTPATH	0	POST TOP	NOT APPLICABLE	RIGID COLUMN	PHILIPS	STELA LONG 12 LED	PETITJEAN	TUBULAR STEEL	5	GALVANISED	METRO
46101402	ST DAVIDS CRESCENT	Bottesford Parish	488232.6	407142.6	15	7016	00193801	01/04/2015 00:00	3	1	LESS THAN 30MPH	BACK OF FOOTPATH	0	POST TOP	NOT APPLICABLE	RIGID COLUMN	PHILIPS	STELA LONG 12 LED	MALLATITE	TUBULAR STEEL	5	GALVANISED	TUBULAR
46101402	ST DAVIDS CRESCENT	Bottesford Parish	488238.53	407224.39	2	7002	00193787	01/04/1980 00:00	3	1	LESS THAN 30MPH	VERGE	0	POST TOP	NOT APPLICABLE	RIGID COLUMN	PHILIPS	STELA LONG 12 LED	PETITJEAN	SHEET STEEL	5	GALVANISED	DAER
46101402	ST DAVIDS CRESCENT	Bottesford Parish	488201	407222.3	3	7004	00193789	01/04/2015 00:00	3	1	LESS THAN 30MPH	BACK OF FOOTPATH	0	POST TOP	NOT APPLICABLE	RIGID COLUMN	PHILIPS	STELA LONG 12 LED	MALLATITE	TUBULAR STEEL	5	GALVANISED	TUBULAR
46101402	ST DAVIDS CRESCENT	Bottesford Parish	488171.96	407212.12	4	7005	00193790	01/04/2015 00:00	3	1	LESS THAN 30MPH	BACK OF FOOTPATH	0	POST TOP	NOT APPLICABLE	RIGID COLUMN	PHILIPS	STELA LONG 12 LED	MALLATITE	SHEET STEEL	5	GALVANISED	TUBULAR
46101402	ST DAVIDS CRESCENT	Bottesford Parish	488183.4	407202.2	5	7006	00193791	01/04/2015 00:00	3	1	LESS THAN 30MPH	BACK OF FOOTPATH	0	POST TOP	NOT APPLICABLE	RIGID COLUMN	PHILIPS	STELA LONG 12 LED	MALLATITE	SHEET STEEL	5	GALVANISED	TUBULAR
46101402	ST DAVIDS CRESCENT	Bottesford Parish	488145.22	407200.57	6	7007	00193792	01/04/1980 00:00	3	1	LESS THAN 30MPH	BACK OF FOOTPATH	0	POST TOP	NOT APPLICABLE	RIGID COLUMN	PHILIPS	STELA LONG 12 LED	PETITJEAN	SHEET STEEL	5	GALVANISED	NIDD
46101402	ST DAVIDS CRESCENT	Bottesford Parish	488136.01	407172.78	7	7008	00193793	01/04/1980 00:00	3	1	LESS THAN 30MPH	BACK OF FOOTPATH	0	POST TOP	NOT APPLICABLE	RIGID COLUMN	PHILIPS	STELA LONG 12 LED	PETITJEAN	SHEET STEEL	5	GALVANISED	NIDD
46101402	ST DAVIDS CRESCENT	Bottesford Parish	488146.73	407145.01	8	7009	00193794	01/04/1980 00:00	3	1	LESS THAN 30MPH	BACK OF FOOTPATH	0	POST TOP	NOT APPLICABLE	RIGID COLUMN	PHILIPS	STELA LONG 12 LED	PETITJEAN	SHEET STEEL	5	GALVANISED	NIDD
46101402	ST DAVIDS CRESCENT	Bottesford Parish	488159.86	407113.51	9	7010	00193795	01/04/1980 00:00	3	1	LESS THAN 30MPH	BACK OF FOOTPATH	0	POST TOP	NOT APPLICABLE	RIGID COLUMN	PHILIPS	STELA LONG 12 LED	PETITJEAN	SHEET STEEL	5	GALVANISED	NIDD
46101403	ST DENYS CLOSE	South Killingholme Parish	514935.18	416430.66	1	7000	00193802	01/04/2001 00:00	3	1	LESS THAN 30MPH	BACK OF FOOTPATH	0	POST TOP	NOT APPLICABLE	RIGID COLUMN	URBIS	AXIA 2 S1	MALLATITE	TUBULAR STEEL	6	GALVANISED	STEPPED TUBULAR
46101403	ST DENYS CLOSE	South Killingholme Parish	514903.29	416419.57	2	7001	00193803	01/04/2001 00:00	3	1	LESS THAN 30MPH	BACK OF FOOTPATH	0	POST TOP	LIGHT GREY	RIGID COLUMN	URBIS	AXIA 2 S1	MALLATITE	TUBULAR STEEL	6	PAINTED	STEPPED TUBULAR
46101403	ST DENYS CLOSE	South Killingholme Parish	514897.71	416396.62	3	7002	00193804	01/04/2008 00:00	3	1	NOT ON A ROAD	BACK OF FOOTPATH	0	POST TOP	NOT APPLICABLE	MID HINGED	URBIS	AXIA 2 S1	PETITJEAN	SHEET STEEL	5	GALVANISED	LEVEN
46101403	ST DENYS CLOSE	South Killingholme Parish	514867.92	416424.92	4	7003	00193805	01/04/2001 00:00	3	1	LESS THAN 30MPH	BACK OF FOOTPATH	0	POST TOP	NOT APPLICABLE	RIGID COLUMN	URBIS	AXIA 2 S1	MALLATITE	TUBULAR STEEL	6	GALVANISED	STEPPED TUBULAR
46101403	ST DENYS CLOSE	South Killingholme Parish	514832.01	416416.05	5	7004	00193806	01/04/2001 00:00	3	1	LESS THAN 30MPH	BACK OF FOOTPATH	0	POST TOP	NOT APPLICABLE	RIGID COLUMN	URBIS	AXIA 2 S1	MALLATITE	TUBULAR STEEL	6	GALVANISED	STEPPED TUBULAR
46101403	ST DENYS CLOSE	South Killingholme Parish	514817.72	416395.19	6	7005	00193807	01/04/2001 00:00	3	1	LESS THAN 30MPH	BACK OF FOOTPATH	0	POST TOP	NOT APPLICABLE	RIGID COLUMN	URBIS	AXIA 2 S1	MALLATITE	TUBULAR STEEL	6	GALVANISED	STEPPED TUBULAR
46101403	ST DENYS CLOSE	South Killingholme Parish	514789.99	416386.58	7	7006	00193808	01/04/2001 00:00	3	1	LESS THAN 30MPH	BACK OF FOOTPATH	0	POST TOP	NOT APPLICABLE	RIGID COLUMN	URBIS	AXIA 2 S1	MALLATITE	TUBULAR STEEL	6	GALVANISED	STEPPED TUBULAR
46101403	ST DENYS CLOSE	South Killingholme Parish	514819.12	416360.76	8	7007	00193809	01/04/1998 00:00	3	1	NOT ON A ROAD	BACK OF FOOTPATH	0	POST TOP	NOT APPLICABLE	MID HINGED	URBIS	AXIA 2 S1	PETITJEAN	SHEET STEEL	6	GALVANISED	LEVEN
46101404	ST HELENS ROAD	Brigg Parish	500458.62	407153.96	1	7000	00193810	13/11/2019 00:00	2	3	LESS THAN 30MPH	BACK OF FOOTPATH	0	POST TOP	NOT APPLICABLE	RIGID COLUMN	URBIS	AXIA 2 S1	MALLATITE	TUBULAR STEEL	6	GALVANISED	TUBULAR
46101404	ST HELENS ROAD	Brigg Parish	500711.23	407241.35	10	7009	00193819	13/11/2019 00:00	2	3	LESS THAN 30MPH	BACK OF FOOTPATH	0	POST TOP	NOT APPLICABLE	RIGID COLUMN	URBIS	AXIA 2 S1	MALLATITE	TUBULAR STEEL	6	GALVANISED	TUBULAR
46101404	ST HELENS ROAD	Brigg Parish	500742.06	407239.58	11	7010	00193820	13/11/2019 00:00	2	3	LESS THAN 30MPH	BACK OF FOOTPATH	0	POST TOP	NOT APPLICABLE	RIGID COLUMN	URBIS	AXIA 2 S1	MALLATITE	TUBULAR STEEL	6	GALVANISED	TUBULAR
46101404	ST HELENS ROAD	Brigg Parish	500771.5	407257.78	12	7011	00193821	13/11/2019 00:00	2	3	LESS THAN 30MPH	BACK OF FOOTPATH	0	POST TOP	NOT APPLICABLE	RIGID COLUMN	URBIS	AXIA 2 S1	MALLATITE	TUBULAR STEEL	6	GALVANISED	TUBULAR
46101404	ST HELENS ROAD	Brigg Parish	500801.7	407256.44	13	7012	00193822	13/11/2019 00:00	2	3	LESS THAN 30MPH	BACK OF FOOTPATH	0	POST TOP	NOT APPLICABLE	RIGID COLUMN	URBIS	AXIA 2 S1	MALLATITE	TUBULAR STEEL	6	GALVANISED	TUBULAR
46101404	ST HELENS ROAD	Brigg Parish	500826.97	407273.43	14	7013	00193823	13/11/2019 00:00	2	3	LESS THAN 30MPH	BACK OF FOOTPATH	0	POST TOP	NOT APPLICABLE	RIGID COLUMN	URBIS	AXIA 2 S1	MALLATITE	TUBULAR STEEL	6	GALVANISED	TUBULAR
46101404	ST HELENS ROAD	Brigg Parish	500858.2	407272.38	15	7014	00193824	13/11/2019 00:00	2	3	LESS THAN 30MPH	BACK OF FOOTPATH	0	POST TOP	NOT APPLICABLE	RIGID COLUMN	URBIS	AXIA 2 S1	MALLATITE	TUBULAR STEEL	6	GALVANISED	TUBULAR
46101404	ST HELENS ROAD	Brigg Parish	500886.55	407290.3	16	7015	00193825	13/11/2019 00:00	2	3	LESS THAN 30MPH	BACK OF FOOTPATH	0	POST TOP	NOT APPLICABLE	RIGID COLUMN	URBIS	AXIA 2 S1	MALLATITE	TUBULAR STEEL	6	GALVANISED	TUBULAR
46101404	ST HELENS ROAD	Brigg Parish	500480.39	407169.24	2	7001	00193811	13/11/2019 00:00	2	3	LESS THAN 30MPH	BACK OF FOOTPATH	0	POST TOP	NOT APPLICABLE	RIGID COLUMN	URBIS	AXIA 2 S1	MALLATITE	TUBULAR STEEL	6	GALVANISED	TUBULAR
46101404	ST HELENS ROAD	Brigg Parish	500510.38	407172.46	3	7002	00193812	13/11/2019 00:00	2	3	LESS THAN 30MPH	BACK OF FOOTPATH	0	POST TOP	NOT APPLICABLE	RIGID COLUMN	URBIS	AXIA 2 S1	MALLATITE	TUBULAR STEEL	6	GALVANISED	TUBULAR
46101404	ST HELENS ROAD	Brigg Parish	500535.96	407189.05	4	7003	00193813	13/11/2019 00:00	2	3	LESS THAN 30MPH	BACK OF FOOTPATH	0	POST TOP	NOT APPLICABLE	RIGID COLUMN	URBIS	AXIA 2 S1	MALLATITE	TUBULAR STEEL	6	GALVANISED	TUBULAR
46101404	ST HELENS ROAD	Brigg Parish	500568.73	407189.54	5	7004	00193814	13/11/2019 00:00	2	3	LESS THAN 30MPH	BACK OF FOOTPATH	0	POST TOP	NOT APPLICABLE	RIGID COLUMN	URBIS	AXIA 2 S1	MALLATITE	TUBULAR STEEL	6	GALVANISED	TUBULAR
46101404	ST HELENS ROAD	Brigg Parish	500595.23	407206.32	6	7005	00193815	13/11/2019 00:00	2	3	LESS THAN 30MPH	BACK OF FOOTPATH	0	POST TOP	NOT APPLICABLE	RIGID COLUMN	URBIS	AXIA 2 S1	MALLATITE	TUBULAR STEEL	6	GALVANISED	TUBULAR
46101404	ST HELENS ROAD	Brigg Parish	500625.92	407206.98	7	7006	00193816	13/11/2019 00:00	2	3	LESS THAN 30MPH	BACK OF FOOTPATH	0	POST TOP	NOT APPLICABLE	RIGID COLUMN	URBIS	AXIA 2 S1	MALLATITE	TUBULAR STEEL	6	GALVANISED	TUBULAR
46101404	ST HELENS ROAD	Brigg Parish	500654.94	407224.82	8	7007	00193817	13/11/2019 00:00	2	3	LESS THAN 30MPH	BACK OF FOOTPATH	0	POST TOP	NOT APPLICABLE	RIGID COLUMN	URBIS	AXIA 2 S1	MALLATITE	TUBULAR STEEL	6	GALVANISED	TUBULAR
46101404	ST HELENS ROAD	Brigg Parish	500686.17	407224.81	9	7008	00193818	13/11/2019 00:00	2	3	LESS THAN 30MPH	BACK OF FOOTPATH	0	POST TOP	NOT APPLICABLE	RIGID COLUMN	URBIS	AXIA 2 S1	MALLATITE	TUBULAR STEEL	6	GALVANISED	TUBULAR
46101405	ST HUGHS CRESCENT	Scunthorpe	490220.84	409517.76	1	7000	00193826	01/04/1995 00:00	3	2	LESS THAN 30MPH	BACK OF FOOTPATH	0	POST TOP	NOT APPLICABLE	RIGID COLUMN	URBIS	AXIA 2 S1	PETITJEAN	SHEET STEEL	5	GALVANISED	NIDD
46101405	ST HUGHS CRESCENT	Scunthorpe	490191.34	409521.89	2	7001	00193827	01/04/1995 00:00	3	2	LESS THAN 30MPH	BACK OF FOOTPATH	0	POST TOP	NOT APPLICABLE	RIGID COLUMN	URBIS	AXIA 2 S1	PETITJEAN	SHEET STEEL	5	GALVANISED	NIDD
46101405	ST HUGHS CRESCENT	Scunthorpe	490158.97	409508.13	3	7002	00193828	01/04/1995 00:00	3	2	LESS THAN 30MPH	BACK OF FOOTPATH	0	POST TOP	NOT APPLICABLE	RIGID COLUMN	URBIS	AXIA 2 S1	PETITJEAN	SHEET STEEL	5	GALVANISED	NIDD
46101406	ST JAMES COURT	Scunthorpe	489162.04	411041.47	1	7000	00193829	01/04/2003 00:00	6	3	LESS THAN 30MPH	VERGE	0	POST TOP	NOT APPLICABLE	RIGID COLUMN	URBIS	AXIA 2 S1	PETITJEAN	SHEET STEEL	5	GALVANISED	NIDD
46101406	ST JAMES COURT	Scunthorpe	489171.66	411025.98	2	7001	00193830	01/04/2003 00:00	6	3	LESS THAN 30MPH	BACK OF FOOTPATH	0	POST TOP	NOT APPLICABLE	RIGID COLUMN	URBIS	AXIA 2 S1	PETITJEAN	SHEET STEEL	5	GALVANISED	NIDD
46101406	ST JAMES COURT	Scunthorpe	489144.8	411022.37	3	7002	00193831	01/04/2003 00:00	6	3	LESS THAN 30MPH	BACK OF FOOTPATH	0	POST TOP	NOT APPLICABLE	RIGID COLUMN	URBIS	AXIA 2 S1	PETITJEAN	SHEET STEEL	5	GALVANISED	NIDD
46101407	ST JAMES ROAD	Brigg Parish	501038.26	407403.22	1	7000	00193832	01/04/2008 00:00	2	3	LESS THAN 30MPH	FRONT OF FOOTPATH	0	POST TOP	NOT APPLICABLE	RIGID COLUMN	URBIS	AXIA 2 S1	BRITISH STEI	TUBULAR STEEL	6	GALVANISED	ASH
46101407	ST JAMES ROAD	Brigg Parish	501022.05	407380.45	2	7001	00193833	01/04/1980 00:00	2	3	LESS THAN 30MPH	FRONT OF FOOTPATH	0	POST TOP	LIGHT GREY	RIGID COLUMN	URBIS	AXIA 2 S1	PETITJEAN	SHEET STEEL	5	PAINTED	NIDD
46101407	ST JAMES ROAD	Brigg Parish	500998.56	407372.35	3	7002	00193834

46101425	STANFIELD ROAD	Epworth Parish	477789.27	403964.77	1	7000	00193999	01/04/2000 00:00	5	3	LESS THAN 30MPH	FRONT OF FOOTPATH	0	POST TOP	NOT APPLICABLE	RIGID COLUMN	URBIS	AXIA 2 S1	T AND L	TUBULAR STEEL	5	GALVANISED	STEPPED TUBULAR
46101426	STANIWELL RISE	Scunthorpe	487928.97	409545.06	1	7000	00194000	12/10/2020 00:00	5	2	LESS THAN 30MPH	VERGE	0	POST TOP	NOT APPLICABLE	RIGID COLUMN	URBIS	AXIA 2 S1	MALLATITE	TUBULAR STEEL	6	GALVANISED	TUBULAR
46101426	STANIWELL RISE	Scunthorpe	487935.01	409521.31	2	7001	00194001	12/10/2020 00:00	5	2	LESS THAN 30MPH	BACK OF FOOTPATH	0	POST TOP	NOT APPLICABLE	RIGID COLUMN	URBIS	AXIA 2 S1	MALLATITE	TUBULAR STEEL	6	GALVANISED	TUBULAR
46101426	STANIWELL RISE	Scunthorpe	487929.7	409494.16	3	7002	00194002	12/10/2020 00:00	5	2	LESS THAN 30MPH	VERGE	0	POST TOP	NOT APPLICABLE	RIGID COLUMN	URBIS	AXIA 2 S1	MALLATITE	TUBULAR STEEL	6	GALVANISED	TUBULAR
46101426	STANIWELL RISE	Scunthorpe	487895.64	409477.96	4	7003	00194003	12/10/2020 00:00	5	2	LESS THAN 30MPH	VERGE	0	POST TOP	NOT APPLICABLE	RIGID COLUMN	URBIS	AXIA 2 S1	MALLATITE	TUBULAR STEEL	6	GALVANISED	TUBULAR
46101426	STANIWELL RISE	Scunthorpe	487859.39	409487.87	5	7004	00194004	16/08/2021 00:00	5	2	LESS THAN 30MPH	BACK OF FOOTPATH	0	POST TOP	NOT APPLICABLE	RIGID COLUMN	URBIS	AXIA 2 S1	MALLATITE	TUBULAR STEEL	6	GALVANISED	TUBULAR
46101426	STANIWELL RISE	Scunthorpe	487835.92	409475.8	6	7005	00194005	12/10/2020 00:00	5	2	LESS THAN 30MPH	VERGE	0	POST TOP	NOT APPLICABLE	RIGID COLUMN	URBIS	AXIA 2 S1	MALLATITE	TUBULAR STEEL	6	GALVANISED	TUBULAR
46101426	STANIWELL RISE	Scunthorpe	487804.91	409468.12	7	7006	00194006	12/10/2020 00:00	5	2	LESS THAN 30MPH	VERGE	0	POST TOP	NOT APPLICABLE	RIGID COLUMN	URBIS	AXIA 2 S1	MALLATITE	TUBULAR STEEL	6	GALVANISED	TUBULAR
46101426	STANIWELL RISE	Scunthorpe	487773.21	409482.06	8	7007	00194007	01/04/2006 00:00	5	2	LESS THAN 30MPH	BACK OF FOOTPATH	0	POST TOP	NOT APPLICABLE	RIGID COLUMN	URBIS	AXIA 2 S1	MALLATITE	TUBULAR STEEL	6	GALVANISED	TUBULAR
46101427	STANLEY ROAD	Scunthorpe	487294.64	411489.37	1	7000	00194008	01/04/2015 00:00	2	3	LESS THAN 30MPH	BACK OF FOOTPATH	0	POST TOP	NOT APPLICABLE	RIGID COLUMN	PHILIPS	STELA LONG 14 LED	MALLATITE	TUBULAR STEEL	6	GALVANISED	TUBULAR
46101427	STANLEY ROAD	Scunthorpe	487557.9	411456.3	10	7009	00194017	01/04/2015 00:00	2	3	LESS THAN 30MPH	BACK OF FOOTPATH	0	POST TOP	NOT APPLICABLE	RIGID COLUMN	PHILIPS	STELA LONG 14 LED	MALLATITE	TUBULAR STEEL	6	GALVANISED	TUBULAR
46101427	STANLEY ROAD	Scunthorpe	487314.7	411473.32	2	7001	00194009	01/04/2015 00:00	2	3	LESS THAN 30MPH	BACK OF FOOTPATH	0	POST TOP	NOT APPLICABLE	RIGID COLUMN	PHILIPS	STELA LONG 14 LED	MALLATITE	TUBULAR STEEL	6	GALVANISED	TUBULAR
46101427	STANLEY ROAD	Scunthorpe	487348.74	411471.31	3	7002	00194010	01/04/2015 00:00	2	3	LESS THAN 30MPH	BACK OF FOOTPATH	0	POST TOP	NOT APPLICABLE	RIGID COLUMN	PHILIPS	STELA LONG 14 LED	MALLATITE	TUBULAR STEEL	6	GALVANISED	TUBULAR
46101427	STANLEY ROAD	Scunthorpe	487378.58	411458.61	4	7003	00194011	01/04/2015 00:00	2	3	LESS THAN 30MPH	BACK OF FOOTPATH	0	POST TOP	NOT APPLICABLE	RIGID COLUMN	PHILIPS	STELA LONG 14 LED	MALLATITE	TUBULAR STEEL	6	GALVANISED	TUBULAR
46101427	STANLEY ROAD	Scunthorpe	487411.06	411458.24	5	7004	00194012	01/04/2015 00:00	2	3	LESS THAN 30MPH	BACK OF FOOTPATH	0	POST TOP	NOT APPLICABLE	RIGID COLUMN	PHILIPS	STELA LONG 14 LED	MALLATITE	TUBULAR STEEL	6	GALVANISED	TUBULAR
46101427	STANLEY ROAD	Scunthorpe	487443.31	411466.93	6	7005	00194013	01/04/2015 00:00	2	3	LESS THAN 30MPH	BACK OF FOOTPATH	0	POST TOP	NOT APPLICABLE	RIGID COLUMN	PHILIPS	STELA LONG 14 LED	MALLATITE	TUBULAR STEEL	6	GALVANISED	TUBULAR
46101427	STANLEY ROAD	Scunthorpe	487475.14	411458.62	7	7006	00194014	01/04/2015 00:00	2	3	LESS THAN 30MPH	BACK OF FOOTPATH	0	POST TOP	NOT APPLICABLE	RIGID COLUMN	PHILIPS	STELA LONG 14 LED	MALLATITE	TUBULAR STEEL	6	GALVANISED	TUBULAR
46101427	STANLEY ROAD	Scunthorpe	487507.54	411465.69	8	7007	00194015	01/04/2015 00:00	2	3	LESS THAN 30MPH	BACK OF FOOTPATH	0	POST TOP	NOT APPLICABLE	RIGID COLUMN	PHILIPS	STELA LONG 14 LED	MALLATITE	TUBULAR STEEL	6	GALVANISED	TUBULAR
46101427	STANLEY ROAD	Scunthorpe	487543.67	411457.38	9	7008	00194016	01/04/2015 00:00	2	3	LESS THAN 30MPH	BACK OF FOOTPATH	0	POST TOP	NOT APPLICABLE	RIGID COLUMN	PHILIPS	STELA LONG 14 LED	MALLATITE	TUBULAR STEEL	6	GALVANISED	TUBULAR
46101428	STAPLE ROAD	South Killingholme Parish	515060.69	416369.24	1	7000	00194018	01/04/1973 00:00	3	1	LESS THAN 30MPH	FRONT OF FOOTPATH	1500	SINGLE ARM	LIGHT GREY	RIGID COLUMN	URBIS	AXIA 2 S1	PETITJEAN	SHEET STEEL	6	PAINTED	NIDD
46101428	STAPLE ROAD	South Killingholme Parish	515096.68	416388.79	2	7001	00194019	01/04/1973 00:00	3	1	LESS THAN 30MPH	FRONT OF FOOTPATH	1500	SINGLE ARM	LIGHT GREY	RIGID COLUMN	URBIS	AXIA 2 S1	PETITJEAN	SHEET STEEL	6	PAINTED	NIDD
46101428	STAPLE ROAD	South Killingholme Parish	515127.32	416408.14	3	7002	00194020	01/04/1985 00:00	3	1	LESS THAN 30MPH	FRONT OF FOOTPATH	1500	SINGLE ARM	LIGHT GREY	RIGID COLUMN	URBIS	AXIA 2 S1	PETITJEAN	SHEET STEEL	6	PAINTED	NIDD
46101429	STATHER ROAD	Burton upon Stather Parish	487033.76	417817.87	1	7000	00194021	01/04/2002 00:00	2	3	LESS THAN 30MPH	BACK OF FOOTPATH	0	POST TOP	BLACK	RIGID COLUMN	URBIS	AXIA 2 S1	MALLATITE	TUBULAR STEEL	6	PAINTED	STEPPED TUBULAR
46101429	STATHER ROAD	Burton upon Stather Parish	486764.35	418082.31	10	7009	00194030	01/04/1980 00:00	2	3	LESS THAN 30MPH	ON POLE	800	SINGLE ARM	NOT APPLICABLE	POLE MOUNTED	URBIS	AXIA 2 S1	WOODEN PO	WOOD	5	NOT APPLICABI	Not Applicable
46101429	STATHER ROAD	Burton upon Stather Parish	486743.3	418119.55	11	7010	00194031	01/04/1980 00:00	2	3	LESS THAN 30MPH	ON POLE	800	SINGLE ARM	NOT APPLICABLE	POLE MOUNTED	URBIS	AXIA 2 S1	WOODEN PO	WOOD	5	NOT APPLICABI	Not Applicable
46101429	STATHER ROAD	Burton upon Stather Parish	486721.77	418157.74	12	7011	00194032	01/04/1980 00:00	2	3	LESS THAN 30MPH	ON POLE	800	SINGLE ARM	NOT APPLICABLE	POLE MOUNTED	URBIS	AXIA 2 S1	WOODEN PO	WOOD	5	NOT APPLICABI	Not Applicable
46101429	STATHER ROAD	Burton upon Stather Parish	486700.14	418190.96	13	7012	00194033	01/04/1980 00:00	2	3	LESS THAN 30MPH	ON POLE	800	SINGLE ARM	NOT APPLICABLE	POLE MOUNTED	URBIS	AXIA 2 S1	WOODEN PO	WOOD	5	NOT APPLICABI	Not Applicable
46101429	STATHER ROAD	Burton upon Stather Parish	486671.78	418235.98	14	7013	00194034	01/04/1980 00:00	2	3	LESS THAN 30MPH	ON POLE	800	SINGLE ARM	NOT APPLICABLE	POLE MOUNTED	URBIS	AXIA 2 S1	WOODEN PO	WOOD	5	NOT APPLICABI	Not Applicable
46101429	STATHER ROAD	Burton upon Stather Parish	486648.13	418275.62	15	7014	00194035	01/04/1980 00:00	2	3	LESS THAN 30MPH	ON POLE	800	SINGLE ARM	NOT APPLICABLE	POLE MOUNTED	URBIS	AXIA 2 S1	WOODEN PO	WOOD	5	NOT APPLICABI	Not Applicable
46101429	STATHER ROAD	Burton upon Stather Parish	486620.38	418324.55	16	7015	00194036	01/04/1980 00:00	2	3	LESS THAN 30MPH	ON POLE	800	SINGLE ARM	NOT APPLICABLE	POLE MOUNTED	URBIS	AXIA 2 S1	WOODEN PO	WOOD	5	NOT APPLICABI	Not Applicable
46101429	STATHER ROAD	Burton upon Stather Parish	486607.47	418347.93	17	7016	00194037	01/04/2008 00:00	2	3	LESS THAN 30MPH	BACK OF FOOTPATH	0	POST TOP	NOT APPLICABLE	RIGID COLUMN	URBIS	AXIA 2 S1	BRITISH STEE	TUBULAR STEEL	6	GALVANISED	ASH
46101429	STATHER ROAD	Burton upon Stather Parish	486595.11	418370.25	18	7017	00194038	01/04/1980 00:00	2	3	LESS THAN 30MPH	ON POLE	800	SINGLE ARM	NOT APPLICABLE	POLE MOUNTED	URBIS	AXIA 2 S1	WOODEN PO	WOOD	5	NOT APPLICABI	Not Applicable
46101429	STATHER ROAD	Burton upon Stather Parish	486579.09	418398.19	19	7018	00194039	01/04/1980 00:00	2	3	LESS THAN 30MPH	ON POLE	800	SINGLE ARM	NOT APPLICABLE	POLE MOUNTED	URBIS	AXIA 2 S1	WOODEN PO	WOOD	5	NOT APPLICABI	Not Applicable
46101429	STATHER ROAD	Burton upon Stather Parish	487017.9	417815.72	2	7001	00194022	01/04/1991 00:00	2	3	LESS THAN 30MPH	ON POLE	300	SINGLE ARM	NOT APPLICABLE	POLE MOUNTED	URBIS	AXIA 2 S1	WOODEN PO	WOOD	5	NOT APPLICABI	Not Applicable
46101429	STATHER ROAD	Burton upon Stather Parish	486560.05	418443.16	20	7019	00194040	01/04/1980 00:00	2	3	LESS THAN 30MPH	ON POLE	800	SINGLE ARM	NOT APPLICABLE	POLE MOUNTED	URBIS	AXIA 2 S1	WOODEN PO	WOOD	5	NOT APPLICABI	Not Applicable
46101429	STATHER ROAD	Burton upon Stather Parish	486541.4	418500.3	21	7020	00194041	01/04/1980 00:00	2	3	LESS THAN 30MPH	ON POLE	800	SINGLE ARM	NOT APPLICABLE	POLE MOUNTED	URBIS	AXIA 2 S1	WOODEN PO	WOOD	5	NOT APPLICABI	Not Applicable
46101429	STATHER ROAD	Burton upon Stather Parish	486531.74	418543.53	22	7021	00194042	01/04/1980 00:00	2	3	LESS THAN 30MPH	ON POLE	800	SINGLE ARM	NOT APPLICABLE	POLE MOUNTED	URBIS	AXIA 2 S1	WOODEN PO	WOOD	5	NOT APPLICABI	Not Applicable
46101429	STATHER ROAD	Burton upon Stather Parish	486534.31	418587.78	23	7022	00194043	01/04/1980 00:00	2	3	LESS THAN 30MPH	ON POLE	800	SINGLE ARM	NOT APPLICABLE	POLE MOUNTED	URBIS	AXIA 2 S1	WOODEN PO	WOOD	5	NOT APPLICABI	Not Applicable
46101429	STATHER ROAD	Burton upon Stather Parish	486988.12	417835.18	3	7002	00194023	01/04/1991 00:00	2	3	LESS THAN 30MPH	ON POLE	300	SINGLE ARM	NOT APPLICABLE	POLE MOUNTED	URBIS	AXIA 2 S1	WOODEN PO	WOOD	5	NOT APPLICABI	Not Applicable
46101429	STATHER ROAD	Burton upon Stather Parish	486930.11	417843.69	4	7003	00194024	01/04/1980 00:00	2	3	LESS THAN 30MPH	ON POLE	800	SINGLE ARM	NOT APPLICABLE	POLE MOUNTED	URBIS	AXIA 2 S1	WOODEN PO	WOOD	5	NOT APPLICABI	Not Applicable
46101429	STATHER ROAD	Burton upon Stather Parish	486895.78	417871.65	5	7004	00194025	01/04/1980 00:00	2	3	LESS THAN 30MPH	ON POLE	800	SINGLE ARM	NOT APPLICABLE	POLE MOUNTED	URBIS	AXIA 2 S1	WOODEN PO	WOOD	5	NOT APPLICABI	Not Applicable
46101429	STATHER ROAD	Burton upon Stather Parish	486869.7	417915.32	6	7005	00194026	01/04/1980 00:00	2	3	LESS THAN 30MPH	ON POLE	800	SINGLE ARM	NOT APPLICABLE	POLE MOUNTED	URBIS	AXIA 2 S1	WOODEN PO	WOOD	5	NOT APPLICABI	Not Applicable
46101429	STATHER ROAD	Burton upon Stather Parish	486840.18	417953.08	7	7006	00194027	01/04/1980 00:00	2	3	LESS THAN 30MPH	ON POLE	800	SINGLE ARM	NOT APPLICABLE	POLE MOUNTED	URBIS	AXIA 2 S1	WOODEN PO	WOOD	5	NOT APPLICABI	Not Applicable
46101429	STATHER ROAD	Burton upon Stather Parish	486815.61	417990.9	8	7007	00194028	01/04/1980 00:00	2	3	LESS THAN 30MPH	ON POLE	800	SINGLE ARM	NOT APPLICABLE	POLE MOUNTED	URBIS	AXIA 2 S1	WOODEN PO	WOOD	5	NOT APPLICABI	Not Applicable
46101429	STATHER ROAD	Burton upon Stather Parish	486785.84	418043.08	9	7008	00194029	01/04/1980 00:00	2	3	LESS THAN 30MPH	ON POLE	800	SINGLE ARM	NOT APPLICABLE	POLE MOUNTED	URBIS	AXIA 2 S1	WOODEN PO	WOOD	5	NOT APPLICABI	Not Applicable
46101431	STATION ROAD	Burringham Parish	484026.86	409867.21	1	7000	00194044	01/04/1985 00:00	2	1	GREATER THAN 50MPH	VERGE	800	SINGLE ARM	MID GREY	RIGID COLUMN	URBIS	AXIA 2 S1	PETITJEAN	SHEET STEEL	6	PAINTED	DAER
46101431	STATION ROAD	Burringham Parish	484006.97	409840.32	2	7001	00194045	01/04/1973 00:00	2	1	GREATER THAN 50MPH	VERGE	800	SINGLE ARM	MID GREY	RIGID COLUMN	URBIS	AXIA 2 S1	PETITJEAN	SHEET STEEL	6	PAINTED	DAER
46101431	STATION ROAD	Burringham Parish	483983.87	409809.98	3	7002	00194046	01/04/1973 00:00	2	1	LESS THAN 30MPH	VERGE	800	SINGLE ARM	MID GREY	RIGID COLUMN	URBIS	AXIA 2 S1	PETITJEAN	SHEET STEEL	6	PAINTED	DAER
46101431	STATION ROAD	Burringham Parish	483962.5	409780.84	4	7003	00194047	01/04/1985 00:00	2	1	LESS THAN 30MPH	VERGE	800	SINGLE ARM	MID GREY	RIGID COLUMN	URBIS	AXIA 2 S1	PETITJEAN	SHEET STEEL	6	PAINTED	DAER
46101431	STATION ROAD	Burringham Parish	483938.78	409751.9	5	7004	00194048	01/04/1973 00:00	2	1	LESS THAN 30MPH	VERGE	800	SINGLE ARM	MID GREY	RIGID COLUMN	URBIS	AXIA 2 S1	PETITJEAN	SHEET STEEL	6	PAINTED	DAER
46101431	STATION ROAD	Burringham Parish	483909	409718.35	6	7005	00194049	01/04/1973 00:00	2	1	LESS THAN 30MPH	VERGE	800	SINGLE ARM	MID GREY	RIGID COLUMN	URBIS	AXIA 2 S1	PETITJEAN	SHEET STEEL	6	PAINTED	DAER
46101431	STATION ROAD	Burringham Parish	483881.04	409686.33	7	7006	00194050	01/04/1985 00:00	2	1	LESS THAN 30MPH	VERGE	800	SINGLE ARM	NOT APPLICABLE	RIGID COLUMN	URBIS	AXIA 2 S1	MALLATITE	TUBULAR STEEL	6	GALVANISED	STEPPED TUBULAR
46101432	STATION ROAD	East Halton Parish	513880.13	420188.38	1	7000	00194051	01/04/1980 00:00	4	4	LESS THAN 30MPH	BACK OF FOOTPATH	500	SINGLE ARM	NOT APPLICABLE	POLE MOUNTED	URBIS	AXIA 2 S1	WOODEN PO	WOOD	5	NOT APPLICABI	Not Applicable
46101432	STATION ROAD	East Halton Parish	513926.06	420211.4	2	7001	00194052	01/04/1980 00:00	4	4	LESS THAN 30MPH	BACK OF FOOTPATH	500	SINGLE ARM	NOT APPLICABLE	POLE MOUNTED	URBIS	AXIA 2 S1	WOODEN PO	WOOD	5	NOT APPLICABI	Not Applicable
46101432	STATION ROAD	East Halton Parish	513968	420231.72	3	7002	00194053	01/04/1980 00:00	4	4	LESS THAN 30MPH	FRONT OF FOOTPATH	0	POST TOP	LIGHT GREY	RIGID COLUMN	URBIS	AXIA 2 S1	PETITJEAN	SHEET STEEL	5	PAINTED	NIDD
46101433	STATION ROAD	Epworth Parish	477794.3	404154.93	1	7001	00194055	12/12/2018 00:00	5	3	LESS THAN 30MPH	BACK OF FOOTPATH	0	POST TOP	NOT APPLICABLE	RIGID COLUMN	URBIS	AXIA 2 S1	MALLATITE	TUBULAR STEEL	6	GALVANISED	TUBULAR
46101433	STATION ROAD	Epworth Parish	477558.13	404388.62	10	7015	00194069	01/04/1965 00:00	5	3	LESS THAN 30MPH	WALL	800	SINGLE ARM	NOT APPLICABLE	WALL MOUNTED	URBIS	AXIA 2 S1	WALL MOUN	NOT APPLICABLE	5	NOT APPLICABI	Not Applicable
46101433	STATION ROAD	Epworth Parish	477527.37	404417.64	11	7016	00194070	31/05/2018 00:00	5	3	LESS THAN 30MPH	BACK OF FOOTPATH	0	POST TOP	NOT APPLICABLE	RIGID COLUMN	URBIS	AXIA 2 S1	VALMONT ST	TUBULAR STEEL	6	GALVANISED	TUBULAR
46101433	STATION ROAD	Epworth Parish	477505.66	404447.71	12	7017	00194071	01/04/1993 00:00	5	3	LESS THAN 30MPH	BACK OF FOOTPATH	800	SINGLE ARM	NOT APPLICABLE	RIGID COLUMN	URBIS	AXIA 2 S1	PETITJEAN	SHEET STEEL	6	GALVANISED	DAER
46101433	STATION ROAD	Epworth Parish	477473.34	404458.18	13	7018	00194072	01/04/1993 00:00	5	3	LESS THAN 30MPH	BACK OF FOOTPATH	800	SINGLE ARM	NOT APPLICABLE	RIGID COLUMN	URBIS	AXIA 2 S1	PETITJEAN	SHEET STEEL	6	GALVANISED	DAER
46101433	STATION ROAD	Epworth Parish	477451.59	404486.57	14	7019	00194073	01/04/1993 00:00	5	3	LESS THAN 30MPH	BACK OF FOOTPATH	800	SINGLE ARM	NOT APPLICABLE	RIGID COLUMN	URBIS	AXIA 2 S1	PETITJEAN	SHEET STEEL	6	GALVANISED	DAER
46101433	STATION ROAD	Epworth Parish	477424.27	404506.6	15	7020	00194074	01/04/1993 00:00	5	3	LESS THAN 30MPH	BACK OF FOOTPATH	800	SINGLE ARM	NOT APPLICABLE	RIGID COLUMN	URBIS	AXIA 2 S1	PETITJEAN	SHEET STEEL	6	GALVANISED	DAER
46101433	STATION ROAD	Epworth Parish	477395.59	404532.1	16	7021	00194075	01/04/1993 00:00	5	3	LESS THAN 30MPH	BACK OF FOOTPATH	800	SINGLE ARM	NOT APPLICABLE	RIGID COLUMN	URBIS	AXIA 2 S1	PETITJEAN	SHEET STEEL	6	GALVANISED	DAER
46101433	STATION ROAD	Epworth Parish	477358.58	404553.72	17	7022	00194076	01/04/1993 00:00	5	3	LESS THAN 30MPH	BACK OF FOOTPATH	800	SINGLE ARM	NOT APPLICABLE	RIGID COLUMN	URBIS	AXIA 2 S1	PETITJEAN	SHEET STEEL	6	GALVANISED	DAER
46101433	STATION ROAD	Epworth Parish	477346.74	404567.87	18	7023	00194077	01/04/1993 00:00	5	3	LESS THAN 30MPH	BACK OF FOOTPATH	800	SINGLE ARM	NOT APPLICABLE	RIGID COLUMN	URBIS	AXIA 2 S1	PETITJEAN	SHEET STEEL	6	GALVANISED	DAER
46101433	STATION ROAD	Epworth Parish	477328.99	404596.9	19	7024	00194078	01/04/1993 00:00	5	3	LESS THAN 30MPH	BACK OF FOOTPATH	800	SINGLE ARM	NOT APPLICABLE	RIGID COLUMN	URBIS	AXIA 2 S1	PETITJEAN	SHEET STEEL	6	GALVANISED	DAER
46101433	STATION ROAD	Epworth Parish	477750.99	404190.15	2	7002	00194056	01/04/1989 00:00	5	3	LESS THAN 30MPH	BACK OF FOOTPATH	800	SINGLE ARM	NOT APPLICABLE	RIGID COLUMN	URBIS	AXIA 2 S1	PETITJEAN	SHEET STEEL	6	GALVANISED	DAER
46101433	STATION ROAD	Epworth Parish	477291.48	404621.82	20	7025	00194079	01/04/1993 00:00	5	3	LESS THAN 30MPH	BACK OF FOOTPATH	800	SINGLE ARM	NOT APPLICABLE	RIGID COLUMN	URBIS	AXIA 2 S1	PETITJEAN	SHEET STEEL	6	GALVANISED	DAER
46101433	STATION ROAD	Epworth Parish	477254.96	404621.33	21	7026	00194080	01/04/1993 00:00	5	3	LESS THAN 30MPH	BACK OF FOOTPATH	800	SINGLE ARM	NOT APPLICABLE	RIGID COLUMN	URBIS	AXIA 2 S1	PETITJEAN	SHEET STEEL	6	GALVANISED	DAER
46101433	STATION ROAD	Epworth Parish	477223.7	404635.81	22	7027	00194081	01/04/1993 00:00	5	3	LESS THAN 30MPH	BACK OF FOOTPATH	800	SINGLE ARM	NOT APPLICABLE	RIGID COLUMN	URBIS	AXIA 2 S1	PETITJEAN	SHEET STEEL	6	GALVANISED	DAER
46101433	STATION ROAD	Epworth Parish	477181.44	404632.31	23	7028	00194082	01/04/1993 00:00	5	3	LESS THAN 30MPH	BACK OF FOOTPATH	800	SINGLE ARM	NOT APPLICABLE	RIGID COLUMN	URBIS	AXIA 2 S1	PETITJEAN	SHEET STEEL	6	GALVANISED	DAER
46101433	STATION ROAD	Epworth Parish	477149	404638.71	24	7029	00194083	01/04/1993 00:00	5	3	LESS THAN 30MPH	BACK OF FOOTPATH	800	SINGLE ARM	NOT APPLICABLE	RIGID COLUMN	URBIS	AXIA 2 S1	PETITJEAN	SHEET STEEL	6	GALVANISED	DAER
46101433	STATION ROAD	Epworth Parish	477121.37	404653.04	25	7030	00194084	01/04/1993 00:00	5	3	LESS THAN 30MPH	BACK OF FOOTPATH	800	SINGLE ARM	NOT APPLICABLE	RIGID COLUMN	URBIS	AXIA 2 S1	PETITJEAN	SHEET STEEL	6	GALVANISED	DAER
46101433	STATION ROAD	Epworth Parish	477095.35	404671.75	26	7031	00194085	01/04/1993 00:00	5	3	LESS THAN 30MPH	BACK OF FOOTPATH	800	SINGLE ARM	NOT APPLICABLE	RIGID COLUMN	URBIS	AXIA 2 S1	PETITJEAN	SHEET STEEL	6	GALVANISED	DAER
46101433	STATION ROAD	Epworth Parish	477081.67	404703.85	27	7032	00194086	01/04/1993 00:00	5	3	LESS THAN 30MPH	BACK OF FOOTPATH	800	SINGLE ARM	NOT APPLICABLE	RIGID COLUMN	URBIS	AXIA 2 S1	PETITJEAN	SHEET STEEL	6	GALVANISED	DAER
46101433	STATION ROAD	Epworth Parish	477059.9	404734.23	28	7033	00194087	01/04/1993 00:00	5	3	LESS THAN 30MPH	BACK OF FOOTPATH	800	SINGLE ARM	NOT APPLICABLE	RIGID COLUMN	URBIS	AXIA 2 S1	PETITJEAN	SHEET STEEL	6	GALVANISED	DAER
46101433	STATION ROAD	Epworth Parish	477735.93	404206.27	3	7004	00194058	01/04/1989 00:00	5	3	LESS THAN 30MPH	BACK OF FOOTPATH	800	SINGLE ARM	NOT APPLICABLE	RIGID COLUMN	URBIS	AXIA 2 S1	PETITJEAN	SHEET STEEL	6	GALVANISED	DAER
46101433	STATION ROAD	Epworth Parish	477715.34	404232.05	4	7006	00194060	01/04/1980 00:00	5	3	LESS THAN 30MPH	BACK OF FOOTPATH	300	SINGLE ARM	NOT APPLICABLE	RIGID COLUMN	URBIS	AXIA 2 S1	PETITJEAN	SHEET STEEL	5	GALVANISED	DAER
46101433	STATION ROAD	Epworth Parish	477696.98	404255.37	5	7008	00194062	01/04/1980 00:00	5	3	LESS THAN 30MPH	BACK OF FOOTPATH	300	SINGLE ARM	NOT APPLICABLE	RIGID COLUMN	URBIS	AXIA 2 S1	PETITJEAN	SHEET STEEL	5	GALVANISED	DAER
46101433	STATION ROAD	Epworth Parish	477670.09	404281.37	6	7010	00194064	01/04/1980 00:00	5	3	LESS THAN 30MPH	BACK OF FOOTPATH	300	SINGLE ARM	NOT APPLICABLE	RIGID COLUMN	URBIS	AXIA 2 S1	PETITJEAN	SHEET STEEL	5	GALVANISED	DAER
46101433	STATION ROAD	Epworth Parish	477641.98	404310.13	7	7012	00194066	01/04/1985 00:00	5	3	LESS THAN 30MPH	BACK OF FOOTPATH	300	SINGLE ARM	NOT APPLICABLE	RIGID COLUMN	URBIS	AXIA 2 S1	PETITJEAN	SHEET STEEL	5	GALVANISED	DAER
46101433	STATION ROAD	Epworth Parish	477606.09	404341.69	8	7013	00194067	12/12/2018 00:00	5	3	LESS THAN 30MPH	BACK OF FOOTPATH	0	POST TOP	NOT APPLICABLE	RIGID COLUMN	URBIS	AXIA 2 S1	MALLATITE	TUBULAR STEEL	6	GALVANISED	TUBULAR
46101433	STATION ROAD	Epworth Parish	477583.02	404364.29	9	7014	00194068	31/05/2018 00:00	5	3	LESS THAN 30MPH	BACK OF FOOTPATH	0	POST TOP	NOT APPLICABLE	RIGID COLUMN	URBIS	AXIA 2 S1	VALMONT ST	TUBULAR STEEL	6	GALVANISED	TUBULAR
46101434	STATION ROAD TO WEST END	Garthorpe and Fockerby Parish	484689.35	418972.54	1	7000	00203480	01/04/1988 00:00	6	1	LESS THAN 30MPH	ON POLE	1000	SINGLE ARM	NOT APPLICABLE	POLE MOUNTED	URBIS	AXIA 2 S1	FABRIKAT	TUBULAR STEEL	5	GALVANISED	5M01A
46101435	STATION ROAD	Haxey Parish	477268.96	398812.93	1	7000	00194088	01/04/1999 00:00	6	2	BETWEEN 30-50 MPH	BACK OF FOOTPATH	1000	SINGLE ARM	NOT APPLICABLE	RIGID COLUMN	URBIS	AXIA 2 S1	PETITJEAN	SHEET STEEL	8	GALVANISED	THAMES
46101435	STATION ROAD	Haxey Parish	477163.74	398546.91	10	7009	00194097	01/04/1999 00:00	6	2	BETWEEN 30-50 MPH	VERGE	1000	SINGLE ARM	NOT APPLICABLE	RIGID COLUMN	URBIS	AXIA 2 S1	PETITJEAN	SHEET STEEL	8	GALVANISED	THAMES
46101435	STATION ROAD	Haxey Parish	477155.76	398504.37	11	7010	00194098	01/04/1999 00:00	6	2	BETWEEN 30-50 MPH	VERGE	1000	SINGLE ARM	NOT APPLICABLE	RIGID COLUMN	URBIS	AXIA 2 S1	PETITJEAN	SHEET STEEL	8	GALVANISED	THAMES
46101435	STATION ROAD	Haxey Parish	477150.64	398475.35	12	7011	00194099	01/04/1999 00:00	6	2	BETWEEN 30-50 MPH	VERGE	1000	SINGLE ARM	NOT APPLICABLE	RIGID COLUMN	URBIS	AXIA 2 S1	PETITJEAN	SHEET STEEL	8	GALVANISED	THAM

46101442	STATION ROAD	Ulceby Parish	511993.84	414914.01	28	7027	00194251	01/04/1980 00:00	3	1	BETWEEN 30-50 MPH	VERGE	1500	SINGLE ARM	LIGHT GREY	RIGID COLUMN	URBIS	AXIA 2 S1	PETITJEAN	SHEET STEEL	10	PAINTED	THAMES
46101442	STATION ROAD	Ulceby Parish	512028.9	414921.6	29	7028	00194252	01/04/1980 00:00	3	1	BETWEEN 30-50 MPH	VERGE	1500	SINGLE ARM	LIGHT GREY	RIGID COLUMN	URBIS	AXIA 2 S1	PETITJEAN	SHEET STEEL	10	PAINTED	THAMES
46101442	STATION ROAD	Ulceby Parish	511082.18	414835.56	3	7002	00194226	01/04/1980 00:00	3	1	LESS THAN 30MPH	VERGE	1500	SINGLE ARM	LIGHT GREY	RIGID COLUMN	URBIS	AXIA 2 S1	PETITJEAN	SHEET STEEL	10	PAINTED	THAMES
46101442	STATION ROAD	Ulceby Parish	512060.09	414927.13	30	7029	00194253	01/04/1980 00:00	3	1	BETWEEN 30-50 MPH	VERGE	1500	SINGLE ARM	LIGHT GREY	RIGID COLUMN	URBIS	AXIA 2 S1	PETITJEAN	SHEET STEEL	10	PAINTED	THAMES
46101442	STATION ROAD	Ulceby Parish	512099.86	414934.17	31	7030	00194254	01/04/1980 00:00	3	1	BETWEEN 30-50 MPH	VERGE	1500	SINGLE ARM	LIGHT GREY	RIGID COLUMN	URBIS	AXIA 2 S1	PETITJEAN	SHEET STEEL	10	PAINTED	THAMES
46101442	STATION ROAD	Ulceby Parish	512133.73	414942.77	32	7031	00194255	01/04/1980 00:00	3	1	BETWEEN 30-50 MPH	VERGE	1500	SINGLE ARM	LIGHT GREY	RIGID COLUMN	URBIS	AXIA 2 S1	PETITJEAN	SHEET STEEL	10	PAINTED	THAMES
46101442	STATION ROAD	Ulceby Parish	512165.45	414948.15	33	7032	00194256	01/04/1980 00:00	3	1	BETWEEN 30-50 MPH	VERGE	1500	SINGLE ARM	LIGHT GREY	RIGID COLUMN	URBIS	AXIA 2 S1	PETITJEAN	SHEET STEEL	10	PAINTED	THAMES
46101442	STATION ROAD	Ulceby Parish	512194.2	414956.54	34	7033	00194257	01/04/1980 00:00	3	1	BETWEEN 30-50 MPH	VERGE	1500	SINGLE ARM	LIGHT GREY	RIGID COLUMN	URBIS	AXIA 2 S1	PETITJEAN	SHEET STEEL	10	PAINTED	THAMES
46101442	STATION ROAD	Ulceby Parish	512221.86	414976.53	35	7034	00194258	01/04/1980 00:00	3	1	BETWEEN 30-50 MPH	BACK OF FOOTPATH	1500	SINGLE ARM	LIGHT GREY	RIGID COLUMN	URBIS	AXIA 2 S1	PETITJEAN	SHEET STEEL	10	PAINTED	THAMES
46101442	STATION ROAD	Ulceby Parish	512248.21	414978.68	36	7035	00194259	01/04/1980 00:00	3	1	BETWEEN 30-50 MPH	BACK OF FOOTPATH	1500	SINGLE ARM	LIGHT GREY	RIGID COLUMN	URBIS	AXIA 2 S1	PETITJEAN	SHEET STEEL	10	PAINTED	THAMES
46101442	STATION ROAD	Ulceby Parish	512266.48	414962.55	37	7036	00194260	01/04/1980 00:00	3	1	BETWEEN 30-50 MPH	VERGE	1500	SINGLE ARM	LIGHT GREY	RIGID COLUMN	URBIS	AXIA 2 S1	PETITJEAN	SHEET STEEL	10	PAINTED	THAMES
46101442	STATION ROAD	Ulceby Parish	512292.95	414967.3	38	7037	00194261	01/04/1980 00:00	3	1	BETWEEN 30-50 MPH	BACK OF FOOTPATH	1500	SINGLE ARM	LIGHT GREY	RIGID COLUMN	URBIS	AXIA 2 S1	PETITJEAN	SHEET STEEL	10	PAINTED	THAMES
46101442	STATION ROAD	Ulceby Parish	512322.54	414947.81	39	7038	00194262	16/03/2021 00:00	3	1	BETWEEN 30-50 MPH	VERGE	500	SINGLE ARM	NOT APPLICABLE	RIGID COLUMN	URBIS	AXIA 2 S1	MALLATITE	TUBULAR STEEL	10	GALVANISED	TUBULAR
46101442	STATION ROAD	Ulceby Parish	511119.98	414836.5	4	7003	00194227	01/04/1980 00:00	3	1	LESS THAN 30MPH	VERGE	1500	SINGLE ARM	LIGHT GREY	RIGID COLUMN	URBIS	AXIA 2 S1	PETITJEAN	SHEET STEEL	10	PAINTED	THAMES
46101442	STATION ROAD	Ulceby Parish	512354.3	414939.1	40	7039	00194263	01/04/1980 00:00	3	1	BETWEEN 30-50 MPH	VERGE	1500	SINGLE ARM	LIGHT GREY	RIGID COLUMN	URBIS	AXIA 2 S1	PETITJEAN	SHEET STEEL	10	PAINTED	THAMES
46101442	STATION ROAD	Ulceby Parish	512382.49	414930.94	41	7040	00194264	01/04/1980 00:00	3	1	BETWEEN 30-50 MPH	VERGE	1500	SINGLE ARM	LIGHT GREY	RIGID COLUMN	URBIS	AXIA 2 S1	PETITJEAN	SHEET STEEL	10	PAINTED	THAMES
46101442	STATION ROAD	Ulceby Parish	512406.68	414927.17	42	7041	00194265	01/04/1980 00:00	3	1	BETWEEN 30-50 MPH	VERGE	1500	SINGLE ARM	LIGHT GREY	RIGID COLUMN	URBIS	AXIA 2 S1	PETITJEAN	SHEET STEEL	10	PAINTED	THAMES
46101442	STATION ROAD	Ulceby Parish	512431.41	414926.1	43	7042	00194266	01/04/1980 00:00	3	1	BETWEEN 30-50 MPH	VERGE	1500	SINGLE ARM	LIGHT GREY	RIGID COLUMN	URBIS	AXIA 2 S1	PETITJEAN	SHEET STEEL	10	PAINTED	THAMES
46101442	STATION ROAD	Ulceby Parish	512457.22	414927.17	44	7043	00194267	01/04/1980 00:00	3	1	BETWEEN 30-50 MPH	VERGE	1500	SINGLE ARM	LIGHT GREY	RIGID COLUMN	URBIS	AXIA 2 S1	PETITJEAN	SHEET STEEL	10	PAINTED	THAMES
46101442	STATION ROAD	Ulceby Parish	512484.1	414934.16	45	7044	00194268	01/04/1980 00:00	3	1	BETWEEN 30-50 MPH	VERGE	1500	SINGLE ARM	LIGHT GREY	RIGID COLUMN	URBIS	AXIA 2 S1	PETITJEAN	SHEET STEEL	10	PAINTED	THAMES
46101442	STATION ROAD	Ulceby Parish	511153.19	414836.43	5	7004	00194228	01/04/1980 00:00	3	1	LESS THAN 30MPH	VERGE	1500	SINGLE ARM	LIGHT GREY	RIGID COLUMN	URBIS	AXIA 2 S1	PETITJEAN	SHEET STEEL	10	PAINTED	THAMES
46101442	STATION ROAD	Ulceby Parish	511191.51	414837.6	6	7005	00194229	01/04/1980 00:00	3	1	LESS THAN 30MPH	VERGE	1500	SINGLE ARM	LIGHT GREY	RIGID COLUMN	URBIS	AXIA 2 S1	PETITJEAN	SHEET STEEL	10	PAINTED	THAMES
46101442	STATION ROAD	Ulceby Parish	511234.09	414837.67	7	7006	00194230	01/04/1980 00:00	3	1	LESS THAN 30MPH	VERGE	1500	SINGLE ARM	LIGHT GREY	RIGID COLUMN	URBIS	AXIA 2 S1	PETITJEAN	SHEET STEEL	10	PAINTED	THAMES
46101442	STATION ROAD	Ulceby Parish	511266.41	414839.83	8	7007	00194231	01/04/1980 00:00	3	1	LESS THAN 30MPH	VERGE	1500	SINGLE ARM	LIGHT GREY	RIGID COLUMN	URBIS	AXIA 2 S1	PETITJEAN	SHEET STEEL	10	PAINTED	THAMES
46101442	STATION ROAD	Ulceby Parish	511299.21	414840.66	9	7008	00194232	01/04/1980 00:00	3	1	LESS THAN 30MPH	VERGE	1500	SINGLE ARM	NOT APPLICABLE	RIGID COLUMN	URBIS	AXIA 2 S1	PETITJEAN	SHEET STEEL	10	GALVANISED	THAMES
46101443	STEPHEN CLOSE	Ulceby Parish	510551.44	414758.34	1	7000	00194269	01/04/1993 00:00	3	1	NOT ON A ROAD	BACK OF FOOTPATH	0	POST TOP	NOT APPLICABLE	MID HINGED	URBIS	AXIA 2 S1	PETITJEAN	SHEET STEEL	5	GALVANISED	LEVEN
46101444	STERNE AVENUE	Broughton Parish	495905.93	408613.77	1	7000	00194270	07/02/2019 00:00	1	1	LESS THAN 30MPH	BACK OF FOOTPATH	0	POST TOP	NOT APPLICABLE	RIGID COLUMN	URBIS	AXIA 2 S1	MALLATITE	TUBULAR STEEL	6	GALVANISED	TUBULAR
46101444	STERNE AVENUE	Broughton Parish	495899.81	408562.72	2	7001	00194271	01/04/1972 00:00	1	1	LESS THAN 30MPH	ON POLE	500	SINGLE ARM	NOT APPLICABLE	POLE MOUNTED	URBIS	AXIA 2 S1	WOODEN PO	WOOD	5	NOT APPLICABI	Not Applicable
46101444	STERNE AVENUE	Broughton Parish	495893.16	408519.9	3	7002	00194272	01/04/1972 00:00	1	1	LESS THAN 30MPH	ON POLE	500	SINGLE ARM	NOT APPLICABLE	POLE MOUNTED	URBIS	AXIA 2 S1	WOODEN PO	WOOD	5	NOT APPLICABI	Not Applicable
46101445	STEVENSONS WAY	Barton upon Humber Parish	502707.84	421214.84	1	7000	00194273	01/04/1980 00:00	5	2	LESS THAN 30MPH	BACK OF FOOTPATH	0	POST TOP	NOT APPLICABLE	RIGID COLUMN	URBIS	AXIA 2 S1	PETITJEAN	SHEET STEEL	5	GALVANISED	NIDD
46101445	STEVENSONS WAY	Barton upon Humber Parish	502707.53	421188.02	2	7001	00194274	01/04/1980 00:00	5	2	LESS THAN 30MPH	BACK OF FOOTPATH	0	POST TOP	MID GREY	RIGID COLUMN	URBIS	AXIA 2 S1	PETITJEAN	SHEET STEEL	5	PAINTED	NIDD
46101445	STEVENSONS WAY	Barton upon Humber Parish	502700.67	421163.38	3	7002	00194275	01/04/1980 00:00	5	2	LESS THAN 30MPH	BACK OF FOOTPATH	0	POST TOP	MID GREY	RIGID COLUMN	URBIS	AXIA 2 S1	PETITJEAN	SHEET STEEL	5	PAINTED	NIDD
46101445	STEVENSONS WAY	Barton upon Humber Parish	502700.04	421136.24	4	7003	00194276	01/04/1980 00:00	5	2	LESS THAN 30MPH	VERGE	0	POST TOP	MID GREY	RIGID COLUMN	URBIS	AXIA 2 S1	PETITJEAN	SHEET STEEL	5	PAINTED	NIDD
46101445	STEVENSONS WAY	Barton upon Humber Parish	502704.51	421110.89	5	7004	00194277	01/04/1980 00:00	5	2	LESS THAN 30MPH	VERGE	0	POST TOP	MID GREY	RIGID COLUMN	URBIS	AXIA 2 S1	PETITJEAN	SHEET STEEL	5	PAINTED	NIDD
46101445	STEVENSONS WAY	Barton upon Humber Parish	502709.05	421085.68	6	7005	00194278	01/04/1980 00:00	5	2	LESS THAN 30MPH	VERGE	0	POST TOP	MID GREY	RIGID COLUMN	URBIS	AXIA 2 S1	PETITJEAN	SHEET STEEL	5	PAINTED	NIDD
46101445	STEVENSONS WAY	Barton upon Humber Parish	502727.14	421096.29	7	7006	00194279	01/04/1980 00:00	5	2	LESS THAN 30MPH	VERGE	0	POST TOP	MID GREY	RIGID COLUMN	URBIS	AXIA 2 S1	PETITJEAN	SHEET STEEL	5	PAINTED	NIDD
46101445	STEVENSONS WAY	Barton upon Humber Parish	502736.81	421107.83	8	7007	00194280	01/04/1980 00:00	5	2	LESS THAN 30MPH	VERGE	0	POST TOP	MID GREY	RIGID COLUMN	URBIS	AXIA 2 S1	PETITJEAN	SHEET STEEL	5	PAINTED	NIDD
46101446	STOCKS HILL	Belton Parish	478405.65	406284.6	1	7000	00194281	01/04/1993 00:00	5	3	LESS THAN 30MPH	BACK OF FOOTPATH	300	SINGLE ARM	NOT APPLICABLE	RIGID COLUMN	URBIS	AXIA 2 S1	PETITJEAN	SHEET STEEL	5	GALVANISED	DAER
46101446	STOCKS HILL	Belton Parish	478198.59	406279.36	10	7009	00194290	20/08/2020 00:00	5	3	LESS THAN 30MPH	VERGE	0	POST TOP	NOT APPLICABLE	RIGID COLUMN	URBIS	AXIA 2 S1	MALLATITE	TUBULAR STEEL	6	GALVANISED	TUBULAR
46101446	STOCKS HILL	Belton Parish	478197.78	406309.12	11	7010	00194291	01/04/2006 00:00	5	3	LESS THAN 30MPH	BACK OF FOOTPATH	300	SINGLE ARM	NOT APPLICABLE	RIGID COLUMN	URBIS	AXIA 2 S1	PETITJEAN	SHEET STEEL	5	GALVANISED	DAER
46101446	STOCKS HILL	Belton Parish	478219.01	406316.11	12	7011	00194292	01/04/2006 00:00	5	3	LESS THAN 30MPH	BACK OF FOOTPATH	300	SINGLE ARM	NOT APPLICABLE	RIGID COLUMN	URBIS	AXIA 2 S1	PETITJEAN	SHEET STEEL	5	GALVANISED	DAER
46101446	STOCKS HILL	Belton Parish	478255.93	406311.88	13	7012	00194293	01/04/2006 00:00	5	3	LESS THAN 30MPH	BACK OF FOOTPATH	300	SINGLE ARM	NOT APPLICABLE	RIGID COLUMN	URBIS	AXIA 2 S1	PETITJEAN	SHEET STEEL	5	GALVANISED	DAER
46101446	STOCKS HILL	Belton Parish	478278.98	406306.09	14	7013	00194294	01/04/2006 00:00	5	3	LESS THAN 30MPH	BACK OF FOOTPATH	300	SINGLE ARM	NOT APPLICABLE	RIGID COLUMN	URBIS	AXIA 2 S1	PETITJEAN	SHEET STEEL	5	GALVANISED	DAER
46101446	STOCKS HILL	Belton Parish	478315.53	406293.83	15	7014	00194295	01/04/2006 00:00	5	3	LESS THAN 30MPH	BACK OF FOOTPATH	300	SINGLE ARM	NOT APPLICABLE	RIGID COLUMN	URBIS	AXIA 2 S1	PETITJEAN	SHEET STEEL	5	GALVANISED	DAER
46101446	STOCKS HILL	Belton Parish	478375.78	406281.88	2	7001	00194282	01/04/1993 00:00	5	3	LESS THAN 30MPH	BACK OF FOOTPATH	300	SINGLE ARM	NOT APPLICABLE	RIGID COLUMN	URBIS	AXIA 2 S1	PETITJEAN	SHEET STEEL	5	GALVANISED	DAER
46101446	STOCKS HILL	Belton Parish	478351.67	406280.14	3	7002	00194283	01/04/1993 00:00	5	3	LESS THAN 30MPH	BACK OF FOOTPATH	300	SINGLE ARM	NOT APPLICABLE	RIGID COLUMN	URBIS	AXIA 2 S1	PETITJEAN	SHEET STEEL	5	GALVANISED	DAER
46101446	STOCKS HILL	Belton Parish	478309.33	406271.39	4	7003	00194284	01/04/1993 00:00	5	3	LESS THAN 30MPH	BACK OF FOOTPATH	300	SINGLE ARM	NOT APPLICABLE	RIGID COLUMN	URBIS	AXIA 2 S1	PETITJEAN	SHEET STEEL	5	GALVANISED	DAER
46101446	STOCKS HILL	Belton Parish	478280.19	406262.17	5	7004	00194285	01/04/1993 00:00	5	3	LESS THAN 30MPH	BACK OF FOOTPATH	300	SINGLE ARM	NOT APPLICABLE	RIGID COLUMN	URBIS	AXIA 2 S1	PETITJEAN	SHEET STEEL	5	GALVANISED	DAER
46101446	STOCKS HILL	Belton Parish	478250.69	406258.11	6	7005	00194286	01/04/1993 00:00	5	3	LESS THAN 30MPH	BACK OF FOOTPATH	300	SINGLE ARM	NOT APPLICABLE	RIGID COLUMN	URBIS	AXIA 2 S1	PETITJEAN	SHEET STEEL	5	GALVANISED	DAER
46101446	STOCKS HILL	Belton Parish	478218.81	406243.82	7	7006	00194287	01/04/1993 00:00	5	3	LESS THAN 30MPH	BACK OF FOOTPATH	300	SINGLE ARM	NOT APPLICABLE	RIGID COLUMN	URBIS	AXIA 2 S1	PETITJEAN	SHEET STEEL	5	GALVANISED	DAER
46101446	STOCKS HILL	Belton Parish	478227.29	406211	8	7007	00194288	01/04/1993 00:00	5	3	LESS THAN 30MPH	BACK OF FOOTPATH	300	SINGLE ARM	NOT APPLICABLE	RIGID COLUMN	URBIS	AXIA 2 S1	PETITJEAN	SHEET STEEL	5	GALVANISED	DAER
46101446	STOCKS HILL	Belton Parish	478206.12	406258.13	9	7008	00194289	01/04/2006 00:00	5	3	LESS THAN 30MPH	BACK OF FOOTPATH	300	SINGLE ARM	NOT APPLICABLE	RIGID COLUMN	URBIS	AXIA 2 S1	PETITJEAN	SHEET STEEL	5	GALVANISED	DAER
46101447	STOCKSHILL ROAD	Scunthorpe	490266.95	409232.97	1	7000	00194296	01/04/2001 00:00	2	4	BETWEEN 30-50 MPH	BACK OF FOOTPATH	1500	SINGLE ARM	NOT APPLICABLE	RIGID COLUMN	URBIS	AXIA 2 S1	PETITJEAN	SHEET STEEL	8	GALVANISED	THAMES
46101447	STOCKSHILL ROAD	Scunthorpe	490178.52	408979.02	10	7009	00194305	01/04/1993 00:00	2	4	LESS THAN 30MPH	FRONT OF FOOTPATH	800	SINGLE ARM	NOT APPLICABLE	RIGID COLUMN	URBIS	AXIA 2 S1	PETITJEAN	SHEET STEEL	6	GALVANISED	DAER
46101447	STOCKSHILL ROAD	Scunthorpe	490174.66	408947.42	11	7010	00194306	01/04/1993 00:00	2	4	LESS THAN 30MPH	FRONT OF FOOTPATH	800	SINGLE ARM	NOT APPLICABLE	RIGID COLUMN	URBIS	AXIA 2 S1	PETITJEAN	SHEET STEEL	6	GALVANISED	DAER
46101447	STOCKSHILL ROAD	Scunthorpe	490163.67	408920.99	12	7011	00194307	01/04/1993 00:00	2	4	LESS THAN 30MPH	FRONT OF FOOTPATH	800	SINGLE ARM	NOT APPLICABLE	RIGID COLUMN	URBIS	AXIA 2 S1	PETITJEAN	SHEET STEEL	6	GALVANISED	DAER
46101447	STOCKSHILL ROAD	Scunthorpe	490169.14	408888.77	13	7012	00194308	01/04/1993 00:00	2	4	LESS THAN 30MPH	FRONT OF FOOTPATH	800	SINGLE ARM	NOT APPLICABLE	RIGID COLUMN	URBIS	AXIA 2 S1	PETITJEAN	SHEET STEEL	6	GALVANISED	DAER
46101447	STOCKSHILL ROAD	Scunthorpe	490156.76	408858.52	14	7013	00194309	01/04/1993 00:00	2	4	LESS THAN 30MPH	FRONT OF FOOTPATH	800	SINGLE ARM	NOT APPLICABLE	RIGID COLUMN	URBIS	AXIA 2 S1	PETITJEAN	SHEET STEEL	6	GALVANISED	DAER
46101447	STOCKSHILL ROAD	Scunthorpe	490163.69	408836.35	15	7014	00194310	01/04/1993 00:00	2	4	LESS THAN 30MPH	FRONT OF FOOTPATH	800	SINGLE ARM	NOT APPLICABLE	RIGID COLUMN	URBIS	AXIA 2 S1	PETITJEAN	SHEET STEEL	6	GALVANISED	DAER
46101447	STOCKSHILL ROAD	Scunthorpe	490152.22	408809.86	16	7015	00194311	01/04/1993 00:00	2	4	LESS THAN 30MPH	FRONT OF FOOTPATH	800	SINGLE ARM	NOT APPLICABLE	RIGID COLUMN	URBIS	AXIA 2 S1	PETITJEAN	SHEET STEEL	6	GALVANISED	DAER
46101447	STOCKSHILL ROAD	Scunthorpe	490149.98	408783.13	17	7016	00194312	01/04/1993 00:00	2	4	LESS THAN 30MPH	FRONT OF FOOTPATH	800	SINGLE ARM	NOT APPLICABLE	RIGID COLUMN	URBIS	AXIA 2 S1	PETITJEAN	SHEET STEEL	6	GALVANISED	DAER
46101447	STOCKSHILL ROAD	Scunthorpe	490119.35	408767.38	18	7017	00194313	01/04/1993 00:00	2	4	LESS THAN 30MPH	FRONT OF FOOTPATH	800	SINGLE ARM	NOT APPLICABLE	RIGID COLUMN	URBIS	AXIA 2 S1	PETITJEAN	SHEET STEEL	6	GALVANISED	DAER
46101447	STOCKSHILL ROAD	Scunthorpe	490108	408742.51	19	7018	00194314	01/04/1993 00:00	2	4	LESS THAN 30MPH	BACK OF FOOTPATH	800	SINGLE ARM	NOT APPLICABLE	RIGID COLUMN	URBIS	AXIA 2 S1	PETITJEAN	SHEET STEEL	6	GALVANISED	DAER
46101447	STOCKSHILL ROAD	Scunthorpe	490117.13	408711.19	20	7019	00194315	01/04/1993 00:00	2	4	LESS THAN 30MPH	BACK OF FOOTPATH	800	SINGLE ARM	NOT APPLICABLE	RIGID COLUMN	URBIS	AXIA 2 S1	PETITJEAN	SHEET STEEL	6	GALVANISED	DAER
46101447	STOCKSHILL ROAD	Scunthorpe	490102.04	408681.02	21	7020	00194316	01/04/1993 00:00	2	4	LESS THAN 30MPH	BACK OF FOOTPATH	800	SINGLE ARM	NOT APPLICABLE	RIGID COLUMN	URBIS	AXIA 2 S1	PETITJEAN	SHEET STEEL	6	GALVANISED	DAER
46101447	STOCKSHILL ROAD	Scunthorpe	490242.73	409207.74	2FP	7001	00194297	01/04/1993 00:00	2	4	LESS THAN 30MPH	FRONT OF FOOTPATH	800	SINGLE ARM	LIGHT GREY	RIGID COLUMN	URBIS	AXIA 2 S1	PETITJEAN	SHEET STEEL	6	PAINTED	DAER
46101447	STOCKSHILL ROAD	Scunthorpe	490216.07	409190.29	3	7002	00194298	01/04/1993 00:00	2	4	LESS THAN 30MPH	FRONT OF FOOTPATH	800	SINGLE ARM	NOT APPLICABLE	RIGID COLUMN	URBIS	AXIA 2 S1	PETITJEAN	SHEET STEEL	6	GALVANISED	DAER
46101447	STOCKSHILL ROAD	Scunthorpe	490196.02	409166.76	4	7003	00194299	01/04/1993 00:00	2	4	LESS THAN 30MPH	FRONT OF FOOTPATH	800	SINGLE ARM	NOT APPLICABLE	RIGID COLUMN	URBIS	AXIA 2 S1	PETITJEAN	SHEET STEEL	6	GALVANISED	DAER
46101447	STOCKSHILL ROAD	Scunthorpe	490194.15	409135.76	5	7004	00194300	01/04/1993 00:00	2	4	LESS THAN 30MPH	FRONT OF FOOTPATH	800	SINGLE ARM	NOT APPLICABLE	RIGID COLUMN	URBIS	AXIA 2 S1	PETITJEAN	SHEET STEEL	6	GALVANISED	DAER
46101447	STOCKSHILL ROAD	Scunthorpe	490191.09	409107.46	6	7005	00194301	01/04/1993 00:00	2	4	LESS THAN 30MPH	FRONT OF FOOTPATH	800	SINGLE ARM	NOT APPLICABLE	RIGID COLUMN	URBIS	AXIA 2 S1	PETITJEAN	SHEET STEEL	6	GALVANISED	DAER
46101447	STOCKSHILL ROAD	Scunthorpe	490178.67	409075.53	7	7006	00194302	01/04/1993 00:00	2	4	LESS THAN 30MPH	FRONT OF FOOTPATH	800	SINGLE ARM	NOT APPLICABLE	RIGID COLUMN	URBIS	AXIA 2 S1	PETITJEAN	SHEET STEEL	6	GALVANISED	DAER
46101447	STOCKSHILL ROAD	Scunthorpe	490184.63	409041.54	8	7007	00194303	01/04/1993 00:00	2	4	LESS THAN 30MPH	FRONT OF FOOTPATH	800	SINGLE ARM	NOT APPLICABLE	RIGID COLUMN	URBIS	AXIA 2 S1	PETITJEAN	SHEET STEEL	6	GALVANISED	DAER
46101447	STOCKSHILL ROAD	Scunthorpe	490172.71	409012.09	9	7008	00194304	01/04/1993 00:00	2	4	LESS THAN 30MPH	FRONT OF FOOTPATH	800	SINGLE ARM	NOT APPLICABLE	RIGID COLUMN	URBIS	AXIA 2 S1	PETITJEAN	SHEET STEEL	6	GALVANISED	DAER
46101449	STOOL CLOSE ROAD	Belton Parish	478759.34	406837.53	1	7000	00194317	01/04/1970 00:00	5	3	LESS THAN 30MPH	VERGE	0	POST TOP	NOT APPLICABLE	RIGID COLUMN	URBIS	AXIA 2 S1	CU	TUBULAR STEEL	5	GALVANISED	PRECINCT
46101449	STOOL CLOSE ROAD	Belton Parish	478764.42	406867.85	2	7001	00194318	01/04/1970 00:00	5	3	LESS THAN 30MPH	VERGE	0	POST TOP	NOT APPLICABLE	RIGID COLUMN	URBIS	AXIA 2 S1	CU	TUBULAR STEEL	5	GALVANISED	PRECINCT
46101449	STOOL CLOSE ROAD	Belton Parish	478771.9	406907.7	3	7002	00194319	23/05/2019 00:00	5	3	LESS THAN 30MPH	BACK OF FOOTPATH	0	POST TOP	NOT APPLICABLE	RIGID COLUMN	URBIS	AXIA 2 S1	MALLATITE	TUBULAR STEEL	6	GALVANISED	TUBULAR
46101449	STOOL CLOSE ROAD	Belton Parish	478797.71	406922.23	4	7003	00194320	01/04/2001 00:00	5	3	LESS THAN 30MPH	BACK OF FOOTPATH	0	POST TOP	NOT APPLICABLE	RIGID COLUMN	URBIS	AXIA 2 S1	MALLATITE	TUBULAR STEEL	5	GALVANISED	STEPPED TUBULAR
46101449	STOOL CLOSE ROAD	Belton Parish	478829.93	406923.42	5	7004	00194321	01/04/2001 00:00	5	3	LESS THAN 30MPH	BACK OF FOOTPATH	0	POST TOP	NOT APPLICABLE	RIGID COLUMN	URBIS	AXIA 2 S1	MALLATITE	TUBULAR STEEL	5	GALVANISED	STEPPED TUBULAR
46101449	STOOL CLOSE ROAD	Belton Parish	478835.31	406907.02	6	7005	00194322	01/04/2001 00:00	5	3	LESS THAN 30MPH	VERGE	0	POST TOP	NOT APPLICABLE	RIGID COLUMN	URBIS	AXIA 2 S1	MALLATITE	TUBULAR STEEL	5	GALVANISED	STEPPED TUBULAR
46101449	STOOL CLOSE ROAD	Belton Parish	478863	406879.6	7	7006	00194323	01/04/2001 00:00	5	3	LESS THAN 30MPH	VERGE	0	POST TOP	NOT APPLICABLE	RIGID COLUMN	URBIS	AXIA 2 S1	MALLATITE	TUBULAR STEEL	5	GALVANISED	STEPPED TUBULAR
46101449	STOOL CLOSE ROAD	Belton Parish	478865.69	406901.1	8	7007	00194324	01/04/2001 00:00	5	3	LESS THAN 30MPH	VERGE	0	POST TOP	NOT APPLICABLE	RIGID COLUMN	URBIS	AXIA 2 S1	MALLATITE	TUBULAR STEEL	5	GALVANISED	STEPPED TUBULAR
46101450	STOTHARDS LANE	Goxhill Parish	510117.07	421562.52	1	7000	00194325	01/04/1980 00:00	4	4	LESS THAN 30MPH	VERGE	500	SINGLE ARM	NOT APPLICABLE	POLE MOUNTED	URBIS	AXIA 2 S1	WOODEN PO	WOOD	5	NOT APPLICABI	Not Applicable
46101450	STOTHARDS LANE	Goxhill Parish	510138.29	421597.1	2	7001	00194326	01/04/1980 00:00	4	4	LESS THAN 30MPH	VERGE	500	SINGLE ARM	NOT APPLICABLE	POLE MOUNTED	URBIS	AXIA 2 S1	WOODEN PO	WOOD	5	NOT APPLICABI	Not Applicable
46101450	STOTHARDS LANE	Goxhill Parish	510171.43	421611.73	3	7002	00194327	01/04/1980 00:00	4	4	LESS THAN 30MPH	VERGE	500	SINGLE ARM	NOT APPLICABLE	POLE MOUNTED	URBIS	AXIA 2 S1	WOODEN PO	WOOD	5	NOT APPLICABI	Not Applicable
46101450	STOTHARDS LANE	Goxhill Parish	510215.87	421645.24	4	7003	00194328	01/04/1980 00:00	4	4	LESS THAN 30MPH	VERGE	500	SINGLE ARM	NOT APPLICABLE	POLE MOUNTED	URBIS	AXIA 2 S1	WOODEN PO	WOOD	5	NOT APPLICABI	Not Applicable
46101451	STOW ROAD	Scunthorpe	489521.35	409124.23	1	7000	00194329	01/04/2001 00:00	2	4	LESS THAN 30MPH	BACK OF FOOTPATH	300	SINGLE ARM	NOT APPLICABLE	RIGID COLUMN	URBIS	AXIA 2 S1	MALLATITE	TUBULAR STEEL	6	GALVANISED	STEPPED TUBULAR
46101451	STOW ROAD	Scunthorpe	489775.48	409160.07	10	7009	00194338	09/09/2019 00:00	2	4	LESS THAN 30MPH	FRONT OF FOOTPATH	0	POST TOP	NOT APPLICABLE	RIGID COLUMN	URBIS	AXIA 2 S1	MALLATITE	TUBULAR STEEL	6	GALVANISED	TUBULAR
46101451	STOW ROAD	Scunthorpe	489813.4	409154.09	11	7010	00194339	09/09/2019 00:00	2	4	LESS THAN 30MPH	FRONT OF FOOTPATH	0	POST TOP	NOT APPLICABLE	RIGID COLUMN	URBIS	AXIA 2 S1	MALLATITE	TUBULAR STEEL	6	GALVANISED	TUBULAR
46101451	STOW ROA

46101480	TENSING ROAD	Scunthorpe	490054.03	408302.57	7	7006	00194487	01/04/2013 00:00	1	3	LESS THAN 30MPH	BACK OF FOOTPATH	0	POST TOP	NOT APPLICABLE	RIGID COLUMN	URBIS	AXIA 2 S1	MALLATITE	TUBULAR STEEL	6	GALVANISED	TUBULAR	
46101480	TENSING ROAD	Scunthorpe	490020.97	408291.34	8	7007	00194488	01/04/1985 00:00	1	3	LESS THAN 30MPH	BACK OF FOOTPATH	300	SINGLE ARM	NOT APPLICABLE	RIGID COLUMN	URBIS	AXIA 2 S1	PETITJEAN	SHEET STEEL	5	GALVANISED	DAER	
46101480	TENSING ROAD	Scunthorpe	490019.47	408260.53	9	7008	00194489	01/04/1985 00:00	1	3	LESS THAN 30MPH	VERGE	800	SINGLE ARM	NOT APPLICABLE	RIGID COLUMN	URBIS	AXIA 2 S1	PETITJEAN	SHEET STEEL	5	GALVANISED	DAER	
46101481	TETLEY ROAD	Scunthorpe	490333.69	409236.63	1	7000	00194492	10/11/2020 00:00	3	2	LESS THAN 30MPH	BACK OF FOOTPATH	0	POST TOP	NOT APPLICABLE	RIGID COLUMN	URBIS	AXIA 2 S1	MALLATITE	TUBULAR STEEL	6	GALVANISED	TUBULAR	
46101481	TETLEY ROAD	Scunthorpe	490302.74	409263.02	2	7001	00194493	10/11/2020 00:00	3	2	LESS THAN 30MPH	BACK OF FOOTPATH	0	POST TOP	NOT APPLICABLE	RIGID COLUMN	URBIS	AXIA 2 S1	MALLATITE	TUBULAR STEEL	6	GALVANISED	TUBULAR	
46101482	TETLEY VIEW	Crowle Parish	478366.94	411387.59	1	7000	00194494	03/05/2019 00:00	5	1	LESS THAN 30MPH	BACK OF FOOTPATH	0	POST TOP	NOT APPLICABLE	RIGID COLUMN	URBIS	AXIA 2 S1	MALLATITE	TUBULAR STEEL	6	GALVANISED	TUBULAR	
46101482	TETLEY VIEW	Crowle Parish	478389.52	411383.02	2	7001	00194495	03/05/2019 00:00	5	1	LESS THAN 30MPH	BACK OF FOOTPATH	0	POST TOP	NOT APPLICABLE	RIGID COLUMN	URBIS	AXIA 2 S1	MALLATITE	TUBULAR STEEL	6	GALVANISED	TUBULAR	
46101482	TETLEY VIEW	Crowle Parish	478415.86	411388.13	3	7002	00194496	03/05/2019 00:00	5	1	LESS THAN 30MPH	BACK OF FOOTPATH	0	POST TOP	NOT APPLICABLE	RIGID COLUMN	URBIS	AXIA 2 S1	MALLATITE	TUBULAR STEEL	6	GALVANISED	TUBULAR	
46101484	THE AVENUE	Burton upon Stather Parish	487291.08	417361.36	1	7000	00194497	01/04/2005 00:00	2	3	LESS THAN 30MPH	BACK OF FOOTPATH	300	SINGLE ARM	NOT APPLICABLE	RIGID COLUMN	URBIS	AXIA 2 S1	MALLATITE	TUBULAR STEEL	6	GALVANISED	STEPPED TUBULAR	
46101484	THE AVENUE	Burton upon Stather Parish	487314.2	417350.07	2	7001	00194498	01/04/2005 00:00	2	3	LESS THAN 30MPH	BACK OF FOOTPATH	300	SINGLE ARM	NOT APPLICABLE	RIGID COLUMN	URBIS	AXIA 2 S1	MALLATITE	TUBULAR STEEL	6	GALVANISED	STEPPED TUBULAR	
46101484	THE AVENUE	Burton upon Stather Parish	487342.2	417339.4	3	7002	00194499	01/04/2005 00:00	2	3	LESS THAN 30MPH	BACK OF FOOTPATH	300	SINGLE ARM	NOT APPLICABLE	RIGID COLUMN	URBIS	AXIA 2 S1	MALLATITE	TUBULAR STEEL	6	GALVANISED	STEPPED TUBULAR	
46101484	THE AVENUE	Burton upon Stather Parish	487371.9	417340.39	4	7003	00194500	01/04/2005 00:00	2	3	LESS THAN 30MPH	BACK OF FOOTPATH	300	SINGLE ARM	NOT APPLICABLE	RIGID COLUMN	URBIS	AXIA 2 S1	MALLATITE	TUBULAR STEEL	6	GALVANISED	STEPPED TUBULAR	
46101484	THE AVENUE	Burton upon Stather Parish	487404.03	417325.56	5	7004	00194501	01/04/2005 00:00	2	3	LESS THAN 30MPH	BACK OF FOOTPATH	300	SINGLE ARM	NOT APPLICABLE	RIGID COLUMN	URBIS	AXIA 2 S1	MALLATITE	TUBULAR STEEL	6	GALVANISED	STEPPED TUBULAR	
46101484	THE AVENUE	Burton upon Stather Parish	487429.18	417315.46	6	7005	00194502	01/04/2005 00:00	2	3	LESS THAN 30MPH	BACK OF FOOTPATH	300	SINGLE ARM	NOT APPLICABLE	RIGID COLUMN	URBIS	AXIA 2 S1	MALLATITE	TUBULAR STEEL	6	GALVANISED	STEPPED TUBULAR	
46101484	THE AVENUE	Burton upon Stather Parish	487464.77	417283.33	7	7006	00194503	01/04/2005 00:00	2	3	LESS THAN 30MPH	VERGE	300	SINGLE ARM	NOT APPLICABLE	RIGID COLUMN	URBIS	AXIA 2 S1	MALLATITE	TUBULAR STEEL	6	GALVANISED	STEPPED TUBULAR	
46101484	THE AVENUE	Burton upon Stather Parish	487489.98	417280.86	8FP	7007	00194504	01/04/2005 00:00	2	3	LESS THAN 30MPH	BACK OF FOOTPATH	300	SINGLE ARM	NOT APPLICABLE	RIGID COLUMN	URBIS	AXIA 2 S1	MALLATITE	TUBULAR STEEL	6	GALVANISED	STEPPED TUBULAR	
46101484	THE AVENUE	Burton upon Stather Parish	487517.16	417260.59	9	7008	00194505	01/04/2005 00:00	2	3	LESS THAN 30MPH	BACK OF FOOTPATH	300	SINGLE ARM	NOT APPLICABLE	RIGID COLUMN	URBIS	AXIA 2 S1	MALLATITE	TUBULAR STEEL	6	GALVANISED	STEPPED TUBULAR	
46101485	THE CLIFF	Scunthorpe	487986.82	411406.22	1	7000	00194506	01/04/1984 00:00	6	3	NOT ON A ROAD	VERGE	300	SINGLE ARM	NOT APPLICABLE	RIGID COLUMN	URBIS	AXIA 2 S1	PETITJEAN	SHEET STEEL	5	GALVANISED	DAER	
46101485	THE CLIFF	Scunthorpe	487996.4	411388.81	2	7001	00194507	01/04/1984 00:00	6	3	LESS THAN 30MPH	BACK OF FOOTPATH	300	SINGLE ARM	NOT APPLICABLE	RIGID COLUMN	URBIS	AXIA 2 S1	PETITJEAN	SHEET STEEL	5	GALVANISED	DAER	
46101485	THE CLIFF	Scunthorpe	487985.97	411368.72	3	7002	00194508	01/04/1984 00:00	6	3	LESS THAN 30MPH	BACK OF FOOTPATH	300	SINGLE ARM	NOT APPLICABLE	RIGID COLUMN	URBIS	AXIA 2 S1	PETITJEAN	SHEET STEEL	5	GALVANISED	DAER	
46101485	THE CLIFF	Scunthorpe	487986.93	411334.61	4	7003	00194509	01/04/1984 00:00	6	3	LESS THAN 30MPH	BACK OF FOOTPATH	300	SINGLE ARM	NOT APPLICABLE	RIGID COLUMN	URBIS	AXIA 2 S1	PETITJEAN	SHEET STEEL	5	GALVANISED	DAER	
46101485	THE CLIFF	Scunthorpe	487987.49	411307.21	5	7004	00194510	01/04/1984 00:00	6	3	LESS THAN 30MPH	BACK OF FOOTPATH	300	SINGLE ARM	NOT APPLICABLE	RIGID COLUMN	URBIS	AXIA 2 S1	PETITJEAN	SHEET STEEL	5	GALVANISED	DAER	
46101485	THE CLIFF	Scunthorpe	487997.43	411282.47	6	7005	00194511	01/04/1993 00:00	6	3	LESS THAN 30MPH	BACK OF FOOTPATH	300	SINGLE ARM	NOT APPLICABLE	RIGID COLUMN	URBIS	AXIA 2 S1	PETITJEAN	SHEET STEEL	5	GALVANISED	DAER	
46101486	THE CROFT	West Butterwick Parish	483436.23	405994.35	1	7001	00194513	01/04/2010 00:00	6	4	LESS THAN 30MPH	BACK OF FOOTPATH	0	POST TOP	NOT APPLICABLE	RIGID COLUMN	URBIS	AXIA 2 S1	MALLATITE	TUBULAR STEEL	6	GALVANISED	TUBULAR	
46101486	THE CROFT	West Butterwick Parish	483405.94	405990.38	2	7003	00194515	01/04/2010 00:00	6	4	LESS THAN 30MPH	BACK OF FOOTPATH	0	POST TOP	NOT APPLICABLE	RIGID COLUMN	URBIS	AXIA 2 S1	MALLATITE	TUBULAR STEEL	6	GALVANISED	TUBULAR	
46101486	THE CROFT	West Butterwick Parish	483377.37	405986.53	3	7004	00194516	01/04/2010 00:00	6	4	LESS THAN 30MPH	BACK OF FOOTPATH	0	POST TOP	NOT APPLICABLE	RIGID COLUMN	URBIS	AXIA 2 S1	MALLATITE	TUBULAR STEEL	6	GALVANISED	TUBULAR	
46101486	THE CROFT	West Butterwick Parish	483351.46	405982.96	4	7005	00194517	01/04/2010 00:00	6	4	LESS THAN 30MPH	BACK OF FOOTPATH	0	POST TOP	NOT APPLICABLE	RIGID COLUMN	URBIS	AXIA 2 S1	MALLATITE	TUBULAR STEEL	6	GALVANISED	TUBULAR	
46101487	THE DALES	Bottesford Parish	488378.51	407157.77	1	7000	00194522	01/04/2015 00:00	3	1	LESS THAN 30MPH	VERGE	0	POST TOP	NOT APPLICABLE	RIGID COLUMN	PHILIPS	STELA LONG 10 LED	MALLATITE	TUBULAR STEEL	6	GALVANISED	TUBULAR	
46101487	THE DALES	Bottesford Parish	488431.88	407138.83	2	7001	00194523	01/04/2015 00:00	3	1	LESS THAN 30MPH	VERGE	0	POST TOP	NOT APPLICABLE	RIGID COLUMN	PHILIPS	STELA LONG 10 LED	MALLATITE	TUBULAR STEEL	6	GALVANISED	TUBULAR	
46101487	THE DALES	Bottesford Parish	488454.06	407141.51	3	7002	00194524	01/04/2015 00:00	3	1	LESS THAN 30MPH	VERGE	0	POST TOP	NOT APPLICABLE	RIGID COLUMN	PHILIPS	STELA LONG 10 LED	MALLATITE	TUBULAR STEEL	6	GALVANISED	TUBULAR	
46101487	THE DALES	Bottesford Parish	488489	407132.4	4	7003	00194525	01/04/2015 00:00	3	1	LESS THAN 30MPH	BACK OF FOOTPATH	0	POST TOP	NOT APPLICABLE	RIGID COLUMN	PHILIPS	STELA LONG 10 LED	MALLATITE	TUBULAR STEEL	6	GALVANISED	TUBULAR	
46101487	THE DALES	Bottesford Parish	488516.68	407111.25	5	7004	00194526	01/04/2015 00:00	3	1	LESS THAN 30MPH	VERGE	0	POST TOP	NOT APPLICABLE	RIGID COLUMN	PHILIPS	STELA LONG 10 LED	MALLATITE	TUBULAR STEEL	6	GALVANISED	TUBULAR	
46101487	THE DALES	Bottesford Parish	488551.27	407109.25	6	7005	00194527	01/04/2015 00:00	3	1	LESS THAN 30MPH	VERGE	0	POST TOP	NOT APPLICABLE	RIGID COLUMN	PHILIPS	STELA LONG 10 LED	MALLATITE	TUBULAR STEEL	6	GALVANISED	TUBULAR	
46101487	THE DALES	Bottesford Parish	488579.9	407124.1	7	7006	00194528	01/04/2015 00:00	3	1	LESS THAN 30MPH	BACK OF FOOTPATH	0	POST TOP	NOT APPLICABLE	RIGID COLUMN	PHILIPS	STELA LONG 10 LED	MALLATITE	TUBULAR STEEL	6	GALVANISED	TUBULAR	
46101487	THE DALES	Bottesford Parish	488621.15	407127.36	8	7007	00194529	01/04/2015 00:00	3	1	LESS THAN 30MPH	VERGE	0	POST TOP	NOT APPLICABLE	RIGID COLUMN	PHILIPS	STELA LONG 10 LED	MALLATITE	TUBULAR STEEL	6	GALVANISED	TUBULAR	
46101488	THE FLAREPATH	Elsham Parish	504663.66	413099.42	1	7000	00194530	01/04/1981 00:00	6	1	LESS THAN 30MPH	BACK OF FOOTPATH	1500	SINGLE ARM	MID GREY	RIGID COLUMN	URBIS	AXIA 2 S1	PETITJEAN	SHEET STEEL	8	PAINTED	THAMES	
46101488	THE FLAREPATH	Elsham Parish	504508.99	413300.52	10	7009	00194539	01/04/1981 00:00	6	1	LESS THAN 30MPH	VERGE	1500	SINGLE ARM	MID GREY	RIGID COLUMN	URBIS	AXIA 2 S1	PETITJEAN	SHEET STEEL	8	PAINTED	THAMES	
46101488	THE FLAREPATH	Elsham Parish	504497.8	413322.12	11	7010	00194540	01/04/1981 00:00	6	1	LESS THAN 30MPH	VERGE	1500	SINGLE ARM	MID GREY	RIGID COLUMN	URBIS	AXIA 2 S1	PETITJEAN	SHEET STEEL	8	PAINTED	THAMES	
46101488	THE FLAREPATH	Elsham Parish	504491.85	413352.43	12	7011	00194541	01/04/1981 00:00	6	1	LESS THAN 30MPH	VERGE	1500	SINGLE ARM	MID GREY	RIGID COLUMN	URBIS	AXIA 2 S1	PETITJEAN	SHEET STEEL	8	PAINTED	THAMES	
46101488	THE FLAREPATH	Elsham Parish	504489.3	413376.22	13	7012	00194542	01/04/1981 00:00	6	1	LESS THAN 30MPH	VERGE	1500	SINGLE ARM	MID GREY	RIGID COLUMN	URBIS	AXIA 2 S1	PETITJEAN	SHEET STEEL	8	PAINTED	THAMES	
46101488	THE FLAREPATH	Elsham Parish	504492.54	413415.53	14	7013	00194543	01/04/1981 00:00	6	1	LESS THAN 30MPH	VERGE	1500	SINGLE ARM	MID GREY	RIGID COLUMN	URBIS	AXIA 2 S1	PETITJEAN	SHEET STEEL	8	PAINTED	THAMES	
46101488	THE FLAREPATH	Elsham Parish	504508.97	413436.49	15	7014	00194544	01/04/1981 00:00	6	1	LESS THAN 30MPH	BACK OF FOOTPATH	1500	SINGLE ARM	MID GREY	RIGID COLUMN	URBIS	AXIA 2 S1	PETITJEAN	SHEET STEEL	8	PAINTED	THAMES	
46101488	THE FLAREPATH	Elsham Parish	504508.1	413464.09	16	7015	00194545	01/04/1981 00:00	6	1	LESS THAN 30MPH	VERGE	1500	SINGLE ARM	MID GREY	RIGID COLUMN	URBIS	AXIA 2 S1	PETITJEAN	SHEET STEEL	8	PAINTED	THAMES	
46101488	THE FLAREPATH	Elsham Parish	504517.72	413493.81	17	7016	00194546	01/04/1981 00:00	6	1	LESS THAN 30MPH	VERGE	1500	SINGLE ARM	MID GREY	RIGID COLUMN	URBIS	AXIA 2 S1	PETITJEAN	SHEET STEEL	8	PAINTED	THAMES	
46101488	THE FLAREPATH	Elsham Parish	504525.71	413520.45	18	7017	00194547	01/04/1981 00:00	6	1	LESS THAN 30MPH	VERGE	1500	SINGLE ARM	MID GREY	RIGID COLUMN	URBIS	AXIA 2 S1	PETITJEAN	SHEET STEEL	8	PAINTED	THAMES	
46101488	THE FLAREPATH	Elsham Parish	504537.83	413555.14	19	7018	00194548	01/04/1981 00:00	6	1	LESS THAN 30MPH	VERGE	1500	SINGLE ARM	MID GREY	RIGID COLUMN	URBIS	AXIA 2 S1	PETITJEAN	SHEET STEEL	8	PAINTED	THAMES	
46101488	THE FLAREPATH	Elsham Parish	504640.02	413120.87	2	7001	00194531	01/04/1981 00:00	6	1	LESS THAN 30MPH	VERGE	1500	SINGLE ARM	MID GREY	RIGID COLUMN	URBIS	AXIA 2 S1	PETITJEAN	SHEET STEEL	8	PAINTED	THAMES	
46101488	THE FLAREPATH	Elsham Parish	504544.34	413574.69	20	7019	00194549	01/04/1981 00:00	6	1	LESS THAN 30MPH	VERGE	1500	SINGLE ARM	MID GREY	RIGID COLUMN	URBIS	AXIA 2 S1	PETITJEAN	SHEET STEEL	8	PAINTED	THAMES	
46101488	THE FLAREPATH	Elsham Parish	504561.34	413586.3	21	7020	00194550	01/04/1981 00:00	6	1	LESS THAN 30MPH	BACK OF FOOTPATH	1500	SINGLE ARM	MID GREY	RIGID COLUMN	URBIS	AXIA 2 S1	PETITJEAN	SHEET STEEL	8	PAINTED	THAMES	
46101488	THE FLAREPATH	Elsham Parish	504556.51	413614.92	22	7021	00194551	01/04/1981 00:00	6	1	LESS THAN 30MPH	VERGE	1500	SINGLE ARM	MID GREY	RIGID COLUMN	URBIS	AXIA 2 S1	PETITJEAN	SHEET STEEL	8	PAINTED	THAMES	
46101488	THE FLAREPATH	Elsham Parish	504582.86	413627.95	23	7022	00194552	01/04/1981 00:00	6	1	LESS THAN 30MPH	VERGE	1500	SINGLE ARM	MID GREY	RIGID COLUMN	URBIS	AXIA 2 S1	PETITJEAN	SHEET STEEL	8	PAINTED	THAMES	
46101488	THE FLAREPATH	Elsham Parish	504626.43	413147.38	3	7002	00194532	01/04/1981 00:00	6	1	LESS THAN 30MPH	FRONT OF FOOTPATH	1500	SINGLE ARM	NOT APPLICABLE	RIGID COLUMN	URBIS	AXIA 2 S1	PETITJEAN	SHEET STEEL	8	GALVANISED	THAMES	
46101488	THE FLAREPATH	Elsham Parish	504621.46	413177.43	4FP	7003	00194533	01/04/1981 00:00	6	1	LESS THAN 30MPH	FRONT OF FOOTPATH	1500	SINGLE ARM	MID GREY	RIGID COLUMN	URBIS	AXIA 2 S1	PETITJEAN	SHEET STEEL	8	PAINTED	THAMES	
46101488	THE FLAREPATH	Elsham Parish	504594.63	413196.56	5	7004	00194534	01/04/1981 00:00	6	1	LESS THAN 30MPH	BACK OF FOOTPATH	1500	SINGLE ARM	NOT APPLICABLE	RIGID COLUMN	URBIS	AXIA 2 S1	PETITJEAN	SHEET STEEL	8	GALVANISED	THAMES	
46101488	THE FLAREPATH	Elsham Parish	504588.97	413218.37	6	7005	00194535	01/04/1981 00:00	6	1	LESS THAN 30MPH	FRONT OF FOOTPATH	1500	SINGLE ARM	MID GREY	RIGID COLUMN	URBIS	AXIA 2 S1	PETITJEAN	SHEET STEEL	8	PAINTED	THAMES	
46101488	THE FLAREPATH	Elsham Parish	504556.15	413234.35	7	7006	00194536	01/04/1981 00:00	6	1	LESS THAN 30MPH	VERGE	1500	SINGLE ARM	MID GREY	RIGID COLUMN	URBIS	AXIA 2 S1	PETITJEAN	SHEET STEEL	8	PAINTED	THAMES	
46101488	THE FLAREPATH	Elsham Parish	504540.41	413250.55	8	7007	00194537	01/04/1981 00:00	6	1	LESS THAN 30MPH	VERGE	1500	SINGLE ARM	MID GREY	RIGID COLUMN	URBIS	AXIA 2 S1	PETITJEAN	SHEET STEEL	8	PAINTED	THAMES	
46101488	THE FLAREPATH	Elsham Parish	504523.72	413275.88	9	7008	00194538	01/04/1981 00:00	6	1	LESS THAN 30MPH	VERGE	1500	SINGLE ARM	MID GREY	RIGID COLUMN	URBIS	AXIA 2 S1	PETITJEAN	SHEET STEEL	8	PAINTED	THAMES	
46101489	THE HILL	Worlaby Parish	501595.29	413849.17	1	7000	00194553	01/04/1973 00:00	6	3	LESS THAN 30MPH	VERGE	500	SINGLE ARM	MID GREY	RIGID COLUMN	URBIS	AXIA 2 S1	PETITJEAN	SHEET STEEL	5	PAINTED	DAER	
46101489	THE HILL	Worlaby Parish	501609.7	413866.41	2	7001	00194554	01/04/1973 00:00	6	3	LESS THAN 30MPH	VERGE	300	SINGLE ARM	MID GREY	RIGID COLUMN	URBIS	AXIA 2 S1	PETITJEAN	SHEET STEEL	5	PAINTED	DAER	
46101489	THE HILL	Worlaby Parish	501641.63	413890.5	3	7002	00194555	01/04/1973 00:00	6	3	LESS THAN 30MPH	ON POLE	500	SINGLE ARM	NOT APPLICABLE	POLE MOUNTED	URBIS	AXIA 2 S1	WOODEN PO	WOOD	5	NOT APPLICABI	Not Applicable	
46101489	THE HILL	Worlaby Parish	501673.95	413914.34	4	7003	00194556	01/04/1973 00:00	6	3	LESS THAN 30MPH	ON POLE	500	SINGLE ARM	NOT APPLICABLE	POLE MOUNTED	URBIS	AXIA 2 S1	WOODEN PO	WOOD	5	NOT APPLICABI	Not Applicable	
46101489	THE HILL	Worlaby Parish	501703.09	413935.53	5	7004	00194557	01/04/1973 00:00	6	3	LESS THAN 30MPH	ON POLE	500	SINGLE ARM	NOT APPLICABLE	POLE MOUNTED	URBIS	AXIA 2 S1	WOODEN PO	WOOD	5	NOT APPLICABI	Not Applicable	
46101490	THE LIDGETT	Epworth Parish	477508.83	403903.15	1	7000	00194558	27/07/2023 00:00	5	3	LESS THAN 30MPH	VERGE	0	POST TOP	NOT APPLICABLE	RIGID COLUMN	URBIS	AXIA 2 S1	MALLATITE	TUBULAR STEEL	6	GALVANISED	MALLATITE	
46101490	THE LIDGETT	Epworth Parish	477533.45	403896.47	2	7001	00194559	27/07/2023 00:00	5	3	LESS THAN 30MPH	VERGE	0	POST TOP	NOT APPLICABLE	RIGID COLUMN	URBIS	AXIA 2 S1	MALLATITE	TUBULAR STEEL	6	GALVANISED	MALLATITE	
46101490	THE LIDGETT	Epworth Parish	477544.62	403873.21	3	7002	00194560	27/07/2023 00:00	5	3	LESS THAN 30MPH	VERGE	0	POST TOP	NOT APPLICABLE	RIGID COLUMN	URBIS	AXIA 2 S1	MALLATITE	TUBULAR STEEL	6	GALVANISED	MALLATITE	
46101491	THE MILLFIELD	Hibaldstow Parish	498233.13	402696.16	1	7000	00194561	01/04/1995 00:00	1	4	LESS THAN 30MPH	BACK OF FOOTPATH	0	POST TOP	NOT APPLICABLE	RIGID COLUMN	URBIS	AXIA 2 S1	MALLATITE	TUBULAR STEEL	5	GALVANISED	STEPPED TUBULAR	
46101491	THE MILLFIELD	Hibaldstow Parish	498231.98	402722.98	2	7001	00194562	01/04/1995 00:00	1	4	LESS THAN 30MPH	BACK OF FOOTPATH	0	POST TOP	NOT APPLICABLE	RIGID COLUMN	URBIS	AXIA 2 S1	MALLATITE	TUBULAR STEEL	5	GALVANISED	STEPPED TUBULAR	
46101491	THE MILLFIELD	Hibaldstow Parish	498231.62	402740.29	3	7002	00194563	01/04/1995 00:00	1	4	LESS THAN 30MPH	BACK OF FOOTPATH	0	POST TOP	NOT APPLICABLE	RIGID COLUMN	URBIS	AXIA 2 S1	MALLATITE	TUBULAR STEEL	5	GALVANISED	STEPPED TUBULAR	
46101491	THE MILLFIELD	Hibaldstow Parish	498234.47	402758.27	4	7003	00194564	01/04/1995 00:00	1	4	LESS THAN 30MPH	BACK OF FOOTPATH	0	POST TOP	NOT APPLICABLE	RIGID COLUMN	URBIS	AXIA 2 S1	MALLATITE	TUBULAR STEEL	5	GALVANISED	STEPPED TUBULAR	
46101492	THE OLD ROW	Burton upon Stather Parish	486623	418223	1	7001	04200229	01/04/1980 00:00	2	3	LESS THAN 30MPH	ON POLE	800	SINGLE ARM	NOT APPLICABLE	POLE MOUNTED	URBIS	AXIA 2 S1	WOODEN PO	WOOD	5	NOT APPLICABI	Not Applicable	
46101492	THE OLD ROW	Burton upon Stather Parish	486576	418225	2	7002	04200230	01/04/1980 00:00	2	3	LESS THAN 30MPH	VERGE	0	POST TOP	NOT APPLICABLE	RIGID COLUMN	URBIS	AXIA 2 S1	PETITJEAN	SHEET STEEL	5	GALVANISED	UNKNOWN	
46101493	THE OVAL	Bottesford Parish	488134.13	407194.14	1	7000	00194565	01/04/1980 00:00	3	1	LESS THAN 30MPH	VERGE	0	POST TOP	NOT APPLICABLE	RIGID COLUMN	URBIS	AXIA 2 S1	PETITJEAN	SHEET STEEL	5	GALVANISED	NIDD	
46101493	THE OVAL	Bottesford Parish	488126.37	407229.22	2	7001	00194566	01/04/1980 00:00	3	1	LESS THAN 30MPH	VERGE	0	POST TOP	NOT APPLICABLE	RIGID COLUMN	URBIS	AXIA 2 S1	PETITJEAN	SHEET STEEL	5	GALVANISED	NIDD	
46101493	THE OVAL	Bottesford Parish	488102.32	407247.86	3	7002	00194567	01/04/1980 00:00	3	1	LESS THAN 30MPH	VERGE	0	POST TOP	NOT APPLICABLE	RIGID COLUMN	URBIS	AXIA 2 S1	PETITJEAN	SHEET STEEL	5	GALVANISED	NIDD	
46101494	THE PADDOCK	Burton upon Stather Parish	487166.5	417735.26	1	7000	00194568	01/04/1980 00:00	2	3	LESS THAN 30MPH	VERGE	0	POST TOP	NOT APPLICABLE	RIGID COLUMN	URBIS	AXIA 2 S1	PETITJEAN	SHEET STEEL	5	GALVANISED	NIDD	
46101494	THE PADDOCK	Burton upon Stather Parish	487159.8	417763.52	2	7001	00194569	01/04/1980 00:00	2	3	LESS THAN 30MPH	VERGE	0	POST TOP	NOT APPLICABLE	RIGID COLUMN	URBIS	AXIA 2 S1	PETITJEAN	SHEET STEEL	5	GALVANISED	NIDD	
46101494	THE PADDOCK	Burton upon Stather Parish	487160.33	417791.47	3	7002	00194570	01/04/1980 00:00	2	3	LESS THAN 30MPH	VERGE	0	POST TOP	NOT APPLICABLE	RIGID COLUMN	URBIS	AXIA 2 S1	PETITJEAN	SHEET STEEL	5	GALVANISED	NIDD	
46101495	THE RISE	Bottesford Parish	488319.4	407428.37	1	7000	00194571	01/04/2001 00:00	3	1	LESS THAN 30MPH	BACK OF FOOTPATH	300	SINGLE ARM	NOT APPLICABLE	RIGID COLUMN	URBIS	AXIA 2 S1	MALLATITE	TUBULAR STEEL	6	GALVANISED	STEPPED TUBULAR	
46101495	THE RISE	Bottesford Parish	488348.6	407430.05	2	7001	00194572	01/04/2001 00:00	3	1	LESS THAN 30MPH	BACK OF FOOTPATH	300	SINGLE ARM	NOT APPLICABLE	RIGID COLUMN	URBIS	AXIA 2 S1	MALLATITE	TUBULAR STEEL	6	GALVANISED	STEPPED TUBULAR	
46101495	THE RISE	Bottesford Parish	488368.91	407444.68	3	7002	00194573	01/04/2001 00:00	3	1	LESS THAN 30MPH	BACK OF FOOTPATH	300	SINGLE ARM	NOT APPLICABLE	RIGID COLUMN	URBIS	AXIA 2 S1	MALLATITE	TUBULAR STEEL	6	GALVANISED	STEPPED TUBULAR	
46101496	THE RISE	South Ferriby Parish	498875.35	421054.26	1	7000	00194574	01/04/1996 00:00	6	3	LESS THAN 30MPH	BACK OF FOOTPATH	300	SINGLE ARM	NOT APPLICABLE	RIGID COLUMN	URBIS	AXIA 2 S1	PETITJEAN	TUBULAR STEEL	5	GALVANISED	STEPPED TUBULAR	
46101496	THE RISE	South Ferriby Parish	498855.07	421074.21	2	7001	00194575	01/04/1996 00:00	6	3	LESS THAN 30MPH	BACK OF FOOTPATH	300	SINGLE ARM	NOT APPLICABLE	RIGID COLUMN	URBIS	AXIA 2 S1	PETITJEAN	TUBULAR STEEL	5	GALVANISED	STEPPED TUBULAR	
46101496	THE RISE	South Ferriby Parish	498822.94	421090.42	3	7002	00194576	01/04/1996 00:00	6	3	LESS THAN 30MPH	BACK OF FOOTPATH	300	SINGLE ARM	NOT APPLICABLE	RIGID COLUMN	URBIS	AXIA 2 S1	PETITJEAN	TUBULAR STEEL	5	GALVANISED	STEPPED TUBULAR	
46101498	THE SQUARE	Goxhill Parish	510187.75	421452.56	1	7000	00194577	01/04/1980 00:00	4	4	LESS THAN 30MPH	VERGE	500	SINGLE ARM	NOT APPLICABLE	POLE MOUNTED	URBIS	AXIA 2 S1	WOODEN PO	WOOD	5	NOT APPLICABI	Not Applicable	
46101498	THE SQUARE	Goxhill Parish	510223.3	421475.11	2	7001	00194578	01/04/1980 00:00	4	4	LESS THAN 30MPH	VERGE	500	SINGLE ARM	NOT APPLICABLE	POLE MOUNTED	URBIS	AXIA 2 S1	WOODEN PO	WOOD	5	NOT APPLICABI	Not Applicable	
46101498	THE SQUARE	Goxhill Parish	510260.65	421500.76	3	7002	00194579	01/04/1980 00:00	4	4	LESS THAN 30MPH	VERGE	500	SINGLE ARM	NOT APPLICABLE	POLE MOUNTED	URBIS	AXIA 2 S1	WOODEN PO	WOOD	5	NOT APPLICABI	Not Applicable	
46101498	THE SQUARE	Goxhill Parish	510286.18	421516.88	4	7003	00194580	01/04/1980 00:00	4	4	LESS THAN 30MPH	VERGE	500	SINGLE ARM	NOT APPLICABLE	POLE MOUNTED	URBIS	AXIA 2 S1	WOODEN PO	WOOD	5	NOT APPLICABI	Not Applicable	
46101500	THEODORE

46101522	TOWN HILL	Broughton Parish	496439.03	409180.05	9	7008	00194734	01/04/1980 00:00	1	1	LESS THAN 30MPH	VERGE	800	SINGLE ARM	NOT APPLICABLE	RIGID COLUMN	URBIS	AXIA 2 S1	PETITJEAN	SHEET STEEL	6	GALVANISED	DAER
46101523	TOWN HILL DRIVE	Broughton Parish	496437.87	409206.83	1	7000	00194746	26/02/2019 00:00	1	1	LESS THAN 30MPH	BACK OF FOOTPATH	0	POST TOP	NOT APPLICABLE	RIGID COLUMN	URBIS	AXIA 2 S1	MALLATITE	TUBULAR STEEL	6	GALVANISED	TUBULAR
46101523	TOWN HILL DRIVE	Broughton Parish	496413.12	409462.4	10	7009	00194755	01/04/1980 00:00	1	1	LESS THAN 30MPH	BACK OF FOOTPATH	0	POST TOP	NOT APPLICABLE	RIGID COLUMN	URBIS	AXIA 2 S1	PETITJEAN	SHEET STEEL	5	GALVANISED	NIDD
46101523	TOWN HILL DRIVE	Broughton Parish	496394.13	409493.75	11	7010	00194756	01/04/1980 00:00	1	1	LESS THAN 30MPH	BACK OF FOOTPATH	0	POST TOP	NOT APPLICABLE	RIGID COLUMN	URBIS	AXIA 2 S1	PETITJEAN	SHEET STEEL	5	GALVANISED	NIDD
46101523	TOWN HILL DRIVE	Broughton Parish	496370.76	409513.49	12	7011	00194757	01/04/1980 00:00	1	1	LESS THAN 30MPH	BACK OF FOOTPATH	0	POST TOP	NOT APPLICABLE	RIGID COLUMN	URBIS	AXIA 2 S1	PETITJEAN	SHEET STEEL	5	GALVANISED	NIDD
46101523	TOWN HILL DRIVE	Broughton Parish	496470.8	409221.84	2	7001	00194747	26/02/2019 00:00	1	1	LESS THAN 30MPH	BACK OF FOOTPATH	0	POST TOP	NOT APPLICABLE	RIGID COLUMN	URBIS	AXIA 2 S1	MALLATITE	TUBULAR STEEL	6	GALVANISED	TUBULAR
46101523	TOWN HILL DRIVE	Broughton Parish	496488.86	409241.28	3	7002	00194748	26/02/2019 00:00	1	1	LESS THAN 30MPH	VERGE	0	POST TOP	NOT APPLICABLE	RIGID COLUMN	URBIS	AXIA 2 S1	MALLATITE	TUBULAR STEEL	6	GALVANISED	TUBULAR
46101523	TOWN HILL DRIVE	Broughton Parish	496495.38	409278.67	4	7003	00194749	26/02/2019 00:00	1	1	LESS THAN 30MPH	BACK OF FOOTPATH	0	POST TOP	NOT APPLICABLE	RIGID COLUMN	URBIS	AXIA 2 S1	MALLATITE	TUBULAR STEEL	6	GALVANISED	TUBULAR
46101523	TOWN HILL DRIVE	Broughton Parish	496481.68	409310.82	5	7004	00194750	01/04/1990 00:00	1	1	LESS THAN 30MPH	BACK OF FOOTPATH	0	POST TOP	NOT APPLICABLE	RIGID COLUMN	URBIS	AXIA 2 S1	PETITJEAN	TUBULAR STEEL	5	GALVANISED	STEPPED TUBULAR
46101523	TOWN HILL DRIVE	Broughton Parish	496457.18	409340.41	6	7005	00194751	26/02/2019 00:00	1	1	LESS THAN 30MPH	BACK OF FOOTPATH	0	POST TOP	NOT APPLICABLE	RIGID COLUMN	URBIS	AXIA 2 S1	MALLATITE	TUBULAR STEEL	6	GALVANISED	TUBULAR
46101523	TOWN HILL DRIVE	Broughton Parish	496455.54	409368.74	7	7006	00194752	26/02/2019 00:00	1	1	LESS THAN 30MPH	BACK OF FOOTPATH	0	POST TOP	NOT APPLICABLE	RIGID COLUMN	URBIS	AXIA 2 S1	MALLATITE	TUBULAR STEEL	6	GALVANISED	TUBULAR
46101523	TOWN HILL DRIVE	Broughton Parish	496440.82	409401.7	8	7007	00194753	01/04/1980 00:00	1	1	LESS THAN 30MPH	BACK OF FOOTPATH	0	POST TOP	NOT APPLICABLE	RIGID COLUMN	URBIS	AXIA 2 S1	PETITJEAN	SHEET STEEL	5	GALVANISED	NIDD
46101523	TOWN HILL DRIVE	Broughton Parish	496427.35	409431.56	9	7008	00194754	01/04/1980 00:00	1	1	LESS THAN 30MPH	BACK OF FOOTPATH	0	POST TOP	NOT APPLICABLE	RIGID COLUMN	URBIS	AXIA 2 S1	PETITJEAN	SHEET STEEL	5	GALVANISED	NIDD
46101524	TOWN STREET	Barrow upon Humber Parish	507035.41	421030.11	1	7000	00194758	01/04/1974 00:00	4	1	LESS THAN 30MPH	BACK OF FOOTPATH	1500	SINGLE ARM	LIGHT GREY	RIGID COLUMN	URBIS	AXIA 2 S1	PETITJEAN	SHEET STEEL	10	PAINTED	RIBBLE
46101524	TOWN STREET	Barrow upon Humber Parish	507021.13	421005.85	2	7001	00194759	01/04/1974 00:00	4	1	LESS THAN 30MPH	BACK OF FOOTPATH	1500	SINGLE ARM	LIGHT GREY	RIGID COLUMN	URBIS	AXIA 2 S1	PETITJEAN	SHEET STEEL	10	PAINTED	RIBBLE
46101524	TOWN STREET	Barrow upon Humber Parish	506998.65	420984.79	3	7002	00194760	01/04/1974 00:00	4	1	LESS THAN 30MPH	BACK OF FOOTPATH	1500	SINGLE ARM	LIGHT GREY	RIGID COLUMN	URBIS	AXIA 2 S1	PETITJEAN	SHEET STEEL	10	PAINTED	RIBBLE
46101526	TRAFFORDS WAY	Hibaldstow Parish	497508.51	402986.56	1	7000	00194761	01/04/1992 00:00	1	4	LESS THAN 30MPH	VERGE	0	POST TOP	NOT APPLICABLE	RIGID COLUMN	URBIS	AXIA 2 S1	PETITJEAN	SHEET STEEL	5	GALVANISED	NIDD
46101526	TRAFFORDS WAY	Hibaldstow Parish	497517.87	403007.85	2	7001	00194762	01/04/1992 00:00	1	4	LESS THAN 30MPH	VERGE	0	POST TOP	NOT APPLICABLE	RIGID COLUMN	URBIS	AXIA 2 S1	PETITJEAN	SHEET STEEL	5	GALVANISED	NIDD
46101526	TRAFFORDS WAY	Hibaldstow Parish	497510.73	403030.39	3	7002	00194763	01/04/1992 00:00	1	4	LESS THAN 30MPH	VERGE	0	POST TOP	NOT APPLICABLE	RIGID COLUMN	URBIS	AXIA 2 S1	PETITJEAN	SHEET STEEL	5	GALVANISED	NIDD
46101526	TRAFFORDS WAY	Hibaldstow Parish	497492.14	403047.74	4	7003	00194764	01/04/1992 00:00	1	4	LESS THAN 30MPH	VERGE	0	POST TOP	NOT APPLICABLE	RIGID COLUMN	URBIS	AXIA 2 S1	PETITJEAN	SHEET STEEL	5	GALVANISED	NIDD
46101526	TRAFFORDS WAY	Hibaldstow Parish	497468.53	403052.12	5	7004	00194765	01/04/1992 00:00	1	4	LESS THAN 30MPH	VERGE	0	POST TOP	NOT APPLICABLE	RIGID COLUMN	URBIS	AXIA 2 S1	PETITJEAN	SHEET STEEL	5	GALVANISED	NIDD
46101526	TRAFFORDS WAY	Hibaldstow Parish	497440.69	403050.58	6	7005	00194766	01/04/1992 00:00	1	4	LESS THAN 30MPH	VERGE	0	POST TOP	NOT APPLICABLE	RIGID COLUMN	URBIS	AXIA 2 S1	PETITJEAN	SHEET STEEL	5	GALVANISED	NIDD
46101526	TRAFFORDS WAY	Hibaldstow Parish	497422.8	403042.4	7	7006	00194767	01/04/1992 00:00	1	4	LESS THAN 30MPH	VERGE	0	POST TOP	NOT APPLICABLE	RIGID COLUMN	URBIS	AXIA 2 S1	PETITJEAN	SHEET STEEL	5	GALVANISED	NIDD
46101526	TRAFFORDS WAY	Hibaldstow Parish	497503.85	403059.85	8	7007	00194768	01/04/1992 00:00	1	4	LESS THAN 30MPH	VERGE	0	POST TOP	NOT APPLICABLE	RIGID COLUMN	URBIS	AXIA 2 S1	PETITJEAN	SHEET STEEL	5	GALVANISED	NIDD
46101527	TRAIN GATE	Kirton in Lindsey Parish	493404.55	398355.08	1	7000	00194769	14/01/2019 00:00	1	3	LESS THAN 30MPH	BACK OF FOOTPATH	0	POST TOP	NOT APPLICABLE	RIGID COLUMN	URBIS	AXIA 2 S1	MALLATITE	TUBULAR STEEL	6	GALVANISED	TUBULAR
46101527	TRAIN GATE	Kirton in Lindsey Parish	493431.21	398380.8	2	7001	00194770	14/01/2019 00:00	1	3	LESS THAN 30MPH	BACK OF FOOTPATH	0	POST TOP	NOT APPLICABLE	RIGID COLUMN	URBIS	AXIA 2 S1	MALLATITE	TUBULAR STEEL	6	GALVANISED	TUBULAR
46101527	TRAIN GATE	Kirton in Lindsey Parish	493463.81	398403.82	3	7002	00194771	01/04/1977 00:00	1	3	LESS THAN 30MPH	VERGE	300	SINGLE ARM	MID GREY	RIGID COLUMN	URBIS	AXIA 2 S1	PETITJEAN	SHEET STEEL	5	PAINTED	DAER
46101527	TRAIN GATE	Kirton in Lindsey Parish	493511.59	398415.98	4	7003	00194772	01/04/1977 00:00	1	3	LESS THAN 30MPH	ON POLE	500	SINGLE ARM	NOT APPLICABLE	POLE MOUNTED	URBIS	AXIA 2 S1	WOODEN PO	WOOD	5	NOT APPLICABI	Not Applicable
46101527	TRAIN GATE	Kirton in Lindsey Parish	493544	398457.22	5	7004	00194773	01/04/1977 00:00	1	3	LESS THAN 30MPH	ON POLE	500	SINGLE ARM	NOT APPLICABLE	POLE MOUNTED	URBIS	AXIA 2 S1	WOODEN PO	WOOD	6	NOT APPLICABI	Not Applicable
46101527	TRAIN GATE	Kirton in Lindsey Parish	493585.22	398468.39	6	7005	00194774	10/04/2019 00:00	1	3	LESS THAN 30MPH	BACK OF FOOTPATH	0	POST TOP	NOT APPLICABLE	RIGID COLUMN	URBIS	AXIA 2 S1	MALLATITE	TUBULAR STEEL	6	GALVANISED	TUBULAR
46101527	TRAIN GATE	Kirton in Lindsey Parish	493618.47	398492.19	7	7006	00194775	01/04/1977 00:00	1	3	LESS THAN 30MPH	ON POLE	500	SINGLE ARM	NOT APPLICABLE	POLE MOUNTED	URBIS	AXIA 2 S1	WOODEN PO	WOOD	5	NOT APPLICABI	Not Applicable
46101527	TRAIN GATE	Kirton in Lindsey Parish	493654.91	398496.09	8	7007	00194776	21/04/2021 00:00	1	3	LESS THAN 30MPH	VERGE	0	POST TOP	NOT APPLICABLE	RIGID COLUMN	URBIS	AXIA 2 S1	MALLATITE	TUBULAR STEEL	6	GALVANISED	TUBULAR
46101527	TRAIN GATE	Kirton in Lindsey Parish	493683.05	398526.09	9	7008	00194777	21/04/2021 00:00	1	3	LESS THAN 30MPH	VERGE	0	POST TOP	NOT APPLICABLE	RIGID COLUMN	URBIS	AXIA 2 S1	MALLATITE	TUBULAR STEEL	6	GALVANISED	TUBULAR
46101528	TRENTSIDE	Amcotts Parish	485774.92	414200.06	1	7011	00194790	01/04/1995 00:00	4	2	LESS THAN 30MPH	VERGE	0	POST TOP	NOT APPLICABLE	RIGID COLUMN	URBIS	AXIA 2 S1	PETITJEAN	SHEET STEEL	5	GALVANISED	NIDD
46101528	TRENTSIDE	Amcotts Parish	485992.35	413828.68	10	7008	00194787	01/04/1995 00:00	4	2	LESS THAN 30MPH	VERGE	0	POST TOP	NOT APPLICABLE	RIGID COLUMN	URBIS	AXIA 2 S1	PETITJEAN	SHEET STEEL	5	GALVANISED	NIDD
46101528	TRENTSIDE	Amcotts Parish	485990.1	413736.53	11	7009	00194788	01/04/1995 00:00	4	2	LESS THAN 30MPH	VERGE	0	POST TOP	NOT APPLICABLE	RIGID COLUMN	URBIS	AXIA 2 S1	PETITJEAN	SHEET STEEL	5	GALVANISED	NIDD
46101528	TRENTSIDE	Amcotts Parish	485984.31	413656.5	12	7010	00194789	01/04/1995 00:00	4	2	LESS THAN 30MPH	VERGE	0	POST TOP	NOT APPLICABLE	RIGID COLUMN	URBIS	AXIA 2 S1	PETITJEAN	SHEET STEEL	5	GALVANISED	NIDD
46101528	TRENTSIDE	Amcotts Parish	485807.88	414209.28	2	7000	00194779	01/04/1995 00:00	4	2	LESS THAN 30MPH	VERGE	0	POST TOP	NOT APPLICABLE	RIGID COLUMN	URBIS	AXIA 2 S1	PETITJEAN	SHEET STEEL	5	GALVANISED	NIDD
46101528	TRENTSIDE	Amcotts Parish	485834.43	414214.22	3	7001	00194780	01/04/1995 00:00	4	2	LESS THAN 30MPH	VERGE	0	POST TOP	NOT APPLICABLE	RIGID COLUMN	URBIS	AXIA 2 S1	PETITJEAN	SHEET STEEL	5	GALVANISED	NIDD
46101528	TRENTSIDE	Amcotts Parish	485860.51	414202.93	4	7002	00194781	01/04/1995 00:00	4	2	LESS THAN 30MPH	VERGE	0	POST TOP	NOT APPLICABLE	RIGID COLUMN	URBIS	AXIA 2 S1	PETITJEAN	SHEET STEEL	5	GALVANISED	NIDD
46101528	TRENTSIDE	Amcotts Parish	485873.29	414167.02	5	7003	00194782	01/04/1995 00:00	4	2	LESS THAN 30MPH	VERGE	0	POST TOP	NOT APPLICABLE	RIGID COLUMN	URBIS	AXIA 2 S1	PETITJEAN	SHEET STEEL	5	GALVANISED	NIDD
46101528	TRENTSIDE	Amcotts Parish	485888.16	414132.71	6	7004	00194783	01/04/1995 00:00	4	2	LESS THAN 30MPH	VERGE	0	POST TOP	NOT APPLICABLE	RIGID COLUMN	URBIS	AXIA 2 S1	PETITJEAN	SHEET STEEL	5	GALVANISED	NIDD
46101528	TRENTSIDE	Amcotts Parish	485928.99	414047.07	7	7005	00194784	01/04/1995 00:00	4	2	LESS THAN 30MPH	VERGE	0	POST TOP	NOT APPLICABLE	RIGID COLUMN	URBIS	AXIA 2 S1	PETITJEAN	SHEET STEEL	5	GALVANISED	NIDD
46101528	TRENTSIDE	Amcotts Parish	485954.82	413982.15	8	7006	00194785	01/04/1995 00:00	4	2	LESS THAN 30MPH	VERGE	0	POST TOP	NOT APPLICABLE	RIGID COLUMN	URBIS	AXIA 2 S1	PETITJEAN	SHEET STEEL	5	GALVANISED	NIDD
46101528	TRENTSIDE	Amcotts Parish	485975.51	413910.42	9	7007	00194786	01/04/1995 00:00	4	2	LESS THAN 30MPH	VERGE	0	POST TOP	NOT APPLICABLE	RIGID COLUMN	URBIS	AXIA 2 S1	PETITJEAN	SHEET STEEL	5	GALVANISED	NIDD
46101530	TRENT STREET	Scunthorpe	489993.57	410655.33	1	7000	00194791	01/04/1992 00:00	2	4	LESS THAN 30MPH	FRONT OF FOOTPATH	0	POST TOP	BLACK	RIGID COLUMN	KINGSWOOD	MERCIA 3	KINGSWOOD	TUBULAR STEEL	5	PAINTED	METRO
46101530	TRENT STREET	Scunthorpe	490000.75	410677.47	2	7001	00194792	01/04/1992 00:00	2	4	LESS THAN 30MPH	FRONT OF FOOTPATH	0	POST TOP	BLACK	RIGID COLUMN	KINGSWOOD	MERCIA 3	KINGSWOOD	TUBULAR STEEL	5	PAINTED	METRO
46101530	TRENT STREET	Scunthorpe	489989.85	410694.45	3	7002	00194793	01/04/1992 00:00	2	4	LESS THAN 30MPH	FRONT OF FOOTPATH	0	POST TOP	BLACK	RIGID COLUMN	KINGSWOOD	MERCIA 3	KINGSWOOD	TUBULAR STEEL	5	PAINTED	METRO
46101530	TRENT STREET	Scunthorpe	489997.62	410716.68	4	7003	00194794	01/04/1992 00:00	2	4	LESS THAN 30MPH	FRONT OF FOOTPATH	0	POST TOP	BLACK	RIGID COLUMN	KINGSWOOD	MERCIA 3	KINGSWOOD	TUBULAR STEEL	5	PAINTED	METRO
46101530	TRENT STREET	Scunthorpe	489986.73	410733.74	5	7004	00194795	01/04/1992 00:00	2	4	LESS THAN 30MPH	FRONT OF FOOTPATH	0	POST TOP	BLACK	RIGID COLUMN	KINGSWOOD	MERCIA 3	KINGSWOOD	TUBULAR STEEL	5	PAINTED	METRO
46101530	TRENT STREET	Scunthorpe	489994.94	410751	6	7005	00194796	01/04/1992 00:00	2	4	LESS THAN 30MPH	FRONT OF FOOTPATH	0	POST TOP	BLACK	RIGID COLUMN	KINGSWOOD	MERCIA 3	KINGSWOOD	TUBULAR STEEL	5	PAINTED	METRO
46101530	TRENT STREET	Scunthorpe	489983.92	410766.37	7	7006	00194797	01/04/1992 00:00	2	4	LESS THAN 30MPH	FRONT OF FOOTPATH	0	POST TOP	BLACK	RIGID COLUMN	KINGSWOOD	MERCIA 3	KINGSWOOD	TUBULAR STEEL	5	PAINTED	METRO
46101531	TRENT SIDE	Keadby with Althorpe Parish	483514.9	411552.35	1	7001	00194799	01/04/1985 00:00	4	3	LESS THAN 30MPH	BACK OF FOOTPATH	300	SINGLE ARM	MID GREY	RIGID COLUMN	URBIS	AXIA 2 S1	FABRIKAT	TUBULAR STEEL	5	PAINTED	5M01A
46101531	TRENT SIDE	Keadby with Althorpe Parish	483546.45	411904.99	10	7010	00194808	03/05/2019 00:00	4	3	LESS THAN 30MPH	BACK OF FOOTPATH	0	POST TOP	NOT APPLICABLE	RIGID COLUMN	URBIS	AXIA 2 S1	MALLATITE	TUBULAR STEEL	6	GALVANISED	TUBULAR
46101531	TRENT SIDE	Keadby with Althorpe Parish	483548.98	411944.89	11	7011	00194809	30/10/2016 00:00	4	3	LESS THAN 30MPH	VERGE	0	POST TOP	NOT APPLICABLE	RIGID COLUMN	URBIS	AXIA 2 S1	MALLATITE	TUBULAR STEEL	6	GALVANISED	TUBULAR
46101531	TRENT SIDE	Keadby with Althorpe Parish	483559.63	411981.6	12	7012	00194810	01/04/1985 00:00	4	3	LESS THAN 30MPH	BACK OF FOOTPATH	300	SINGLE ARM	NOT APPLICABLE	RIGID COLUMN	URBIS	AXIA 2 S1	PETITJEAN	SHEET STEEL	5	GALVANISED	DAER
46101531	TRENT SIDE	Keadby with Althorpe Parish	483550.09	412022.02	13	7013	00194811	09/03/2021 00:00	4	3	LESS THAN 30MPH	BACK OF FOOTPATH	0	POST TOP	NOT APPLICABLE	RIGID COLUMN	URBIS	AXIA 2 S1	MALLATITE	TUBULAR STEEL	6	GALVANISED	TUBULAR
46101531	TRENT SIDE	Keadby with Althorpe Parish	483553.15	412068.12	14	7014	00194812	01/04/1980 00:00	4	3	LESS THAN 30MPH	VERGE	300	SINGLE ARM	NOT APPLICABLE	RIGID COLUMN	URBIS	AXIA 2 S1	PETITJEAN	SHEET STEEL	5	GALVANISED	DAER
46101531	TRENT SIDE	Keadby with Althorpe Parish	483516.14	411590.39	2	7002	00194800	01/04/1980 00:00	4	3	LESS THAN 30MPH	BACK OF FOOTPATH	300	SINGLE ARM	NOT APPLICABLE	RIGID COLUMN	URBIS	AXIA 2 S1	PETITJEAN	SHEET STEEL	5	GALVANISED	DAER
46101531	TRENT SIDE	Keadby with Althorpe Parish	483517.75	411634.72	3	7003	00194801	01/04/1985 00:00	4	3	LESS THAN 30MPH	BACK OF FOOTPATH	300	SINGLE ARM	NOT APPLICABLE	RIGID COLUMN	URBIS	AXIA 2 S1	PETITJEAN	SHEET STEEL	5	GALVANISED	DAER
46101531	TRENT SIDE	Keadby with Althorpe Parish	483520.59	411673.54	4	7004	00194802	14/11/2018 00:00	4	3	LESS THAN 30MPH	BACK OF FOOTPATH	0	POST TOP	NOT APPLICABLE	RIGID COLUMN	URBIS	AXIA 2 S1	MALLATITE	TUBULAR STEEL	6	GALVANISED	TUBULAR
46101531	TRENT SIDE	Keadby with Althorpe Parish	483525	411709.63	5	7005	00194803	09/03/2021 00:00	4	3	LESS THAN 30MPH	BACK OF FOOTPATH	0	POST TOP	NOT APPLICABLE	RIGID COLUMN	URBIS	AXIA 2 S1	MALLATITE	TUBULAR STEEL	6	GALVANISED	TUBULAR
46101531	TRENT SIDE	Keadby with Althorpe Parish	483529.67	411746.82	6	7006	00194804	03/05/2019 00:00	4	3	LESS THAN 30MPH	BACK OF FOOTPATH	0	POST TOP	NOT APPLICABLE	RIGID COLUMN	URBIS	AXIA 2 S1	MALLATITE	TUBULAR STEEL	6	GALVANISED	TUBULAR
46101531	TRENT SIDE	Keadby with Althorpe Parish	483534.95	411800.28	7	7007	00194805	01/04/1980 00:00	4	3	LESS THAN 30MPH	BACK OF FOOTPATH	500	SINGLE ARM	NOT APPLICABLE	RIGID COLUMN	URBIS	AXIA 2 S1	PETITJEAN	SHEET STEEL	5	GALVANISED	DAER
46101531	TRENT SIDE	Keadby with Althorpe Parish	483537.77	411830.49	8	7008	00194806	03/05/2019 00:00	4	3	LESS THAN 30MPH	BACK OF FOOTPATH	0	POST TOP	NOT APPLICABLE	RIGID COLUMN	URBIS	AXIA 2 S1	MALLATITE	TUBULAR STEEL	6	GALVANISED	TUBULAR
46101531	TRENT SIDE	Keadby with Althorpe Parish	483540.82	411868.08	9FP	7009	00194807	01/04/1985 00:00	4	3	LESS THAN 30MPH	BACK OF FOOTPATH	300	SINGLE ARM	NOT APPLICABLE	RIGID COLUMN	URBIS	AXIA 2 S1	PETITJEAN	SHEET STEEL	5	GALVANISED	DAER
46101532	TRINITY CLOSE	Goxhill Parish	510722.37	421628.82	1	7000	00194813	01/04/1980 00:00	4	4	LESS THAN 30MPH	VERGE	0	POST TOP	MID GREY	RIGID COLUMN	URBIS	AXIA 2 S1	PETITJEAN	SHEET STEEL	5	PAINTED	NIDD
46101532	TRINITY CLOSE	Goxhill Parish	510741.51	421618.91	2	7001	00194814	01/04/1980 00:00	4	4	LESS THAN 30MPH	VERGE	0	POST TOP	MID GREY	RIGID COLUMN	URBIS	AXIA 2 S1	PETITJEAN	SHEET STEEL	5	PAINTED	NIDD
46101532	TRINITY CLOSE	Goxhill Parish	510763.82	421605.47	3	7002	00194815	01/04/1980 00:00	4	4	LESS THAN 30MPH	VERGE	0	POST TOP	MID GREY	RIGID COLUMN	URBIS	AXIA 2 S1	PETITJEAN	SHEET STEEL	5	PAINTED	NIDD
46101533	TRINITY COURT	Broughton Parish	495762.35	409080.07	1	7000	00194816	01/04/1995 00:00	1	1	LESS THAN 30MPH	BACK OF FOOTPATH	0	POST TOP	NOT APPLICABLE	RIGID COLUMN	URBIS	AXIA 2 S1	PETITJEAN	SHEET STEEL	5	GALVANISED	NIDD
46101533	TRINITY COURT	Broughton Parish	495769.2	409056.01	2	7001	00194817	01/04/1995 00:00	1	1	LESS THAN 30MPH	VERGE	0	POST TOP	NOT APPLICABLE	RIGID COLUMN	URBIS	AXIA 2 S1	PETITJEAN	SHEET STEEL	5	GALVANISED	NIDD
46101533	TRINITY COURT	Broughton Parish	495779.48	409036.32	3	7002	00194818	01/04/1995 00:00	1	1	LESS THAN 30MPH	VERGE	0	POST TOP	NOT APPLICABLE	RIGID COLUMN	URBIS	AXIA 2 S1	PETITJEAN	SHEET STEEL	5	GALVANISED	NIDD
46101533	TRINITY COURT	Broughton Parish	495796.9	409035.07	4	7003	00194819	01/04/1995 00:00	1	1	LESS THAN 30MPH	BACK OF FOOTPATH	0	POST TOP	NOT APPLICABLE	RIGID COLUMN	URBIS	AXIA 2 S1	PETITJEAN	SHEET STEEL	5	GALVANISED	NIDD
46101533	TRINITY COURT	Broughton Parish	495781.91	409024.02	5	7004	00194820	01/04/1995 00:00	1	1	LESS THAN 30MPH	VERGE	0	POST TOP	NOT APPLICABLE	RIGID COLUMN	URBIS	AXIA 2 S1	PETITJEAN	SHEET STEEL	5	GALVANISED	NIDD
46101534	TRINITY ROAD	Bottesford Parish	489367.02	407557.35	1	7000	00194821	01/04/2001 00:00	3	1	LESS THAN 30MPH	VERGE	0	POST TOP	NOT APPLICABLE	RIGID COLUMN	URBIS	AXIA 2 S1	MALLATITE	TUBULAR STEEL	5	GALVANISED	STEPPED TUBULAR
46101534	TRINITY ROAD	Bottesford Parish	489332.82	407550.8	2	7001	00194822	01/04/2001 00:00	3	1	LESS THAN 30MPH	VERGE	0	POST TOP	NOT APPLICABLE	RIGID COLUMN	URBIS	AXIA 2 S1	MALLATITE	TUBULAR STEEL	5	GALVANISED	STEPPED TUBULAR
46101534	TRINITY ROAD	Bottesford Parish	489309.97	407554.3	3	7002	00194823	01/04/2001 00:00	3	1	LESS THAN 30MPH	VERGE	0	POST TOP	NOT APPLICABLE	RIGID COLUMN	URBIS	AXIA 2 S1	MALLATITE	TUBULAR STEEL	5	GALVANISED	STEPPED TUBULAR
46101534	TRINITY ROAD	Bottesford Parish	489283.76	407548.7	4	7003	00194824	01/04/2001 00:00	3	1	LESS THAN 30MPH	VERGE	300	SINGLE ARM	NOT APPLICABLE	RIGID COLUMN	URBIS	AXIA 2 S1	MALLATITE	TUBULAR STEEL	5	GALVANISED	STEPPED TUBULAR
46101534	TRINITY ROAD	Bottesford Parish	489254.47	407543.73	5	7004	00194825	01/04/2001 00:00	3	1	LESS THAN 30MPH	VERGE	300	SINGLE ARM	NOT APPLICABLE	RIGID COLUMN	URBIS	AXIA 2 S1	MALLATITE	TUBULAR STEEL	5	GALVANISED	STEPPED TUBULAR
46101534	TRINITY ROAD	Bottesford Parish	489231.75	407531.79	6	7005	00194826	01/04/2001 00:00	3	1	LESS THAN 30MPH	VERGE	300	SINGLE ARM	NOT APPLICABLE	RIGID COLUMN	URBIS	AXIA 2 S1	MALLATITE	TUBULAR STEEL	5	GALVANISED	STEPPED TUBULAR
46101534	TRINITY ROAD	Bottesford Parish	489210.51	407535.02	7	7006	00194827	01/04/2001 00:00	3	1	LESS THAN 30MPH	VERGE	300	SINGLE ARM	NOT APPLICABLE	RIGID COLUMN	URBIS	AXIA 2 S1	MALLATITE	TUBULAR STEEL	5	GALVANISED	STEPPED TUBULAR
46101535	TUNNEL ROAD	Wrawby Parish	501922.46	409040.69	1	7000	00194828	01/04/1980 00:00	6	4	LESS THAN 30MPH	ON POLE	500	SINGLE ARM	NOT APPLICABLE	POLE MOUNTED	URBIS	AXIA 2 S1	WOODEN PO	WOOD	5	NOT APPLICABI	Not Applicable
46101535	TUNNEL ROAD	Wrawby Parish	501705.39	409396.67	10	7009	00194837	01/04/1980 00:00	6	4	LESS THAN 30MPH	ON POLE	500	SINGLE ARM	NOT APPLICABLE	POLE MOUNTED	URBIS	AXIA 2 S1	WOODEN PO	WOOD	5	NOT APPLICABI	Not Applicable
46101535	TUNNEL ROAD	Wrawby Parish	501914.49	409081.43	2	7001	00194829	01/04/1980 00:00	6	4	LESS THAN 30MPH	ON POLE	500	SINGLE ARM	NOT APPLICABLE	POLE MOUNTED	URBIS	AXIA 2 S1	WOODEN PO	WOOD	5	NOT APPLICABI	Not Applicable
46101535	TUNNEL ROAD	Wrawby Parish	501908.65	409118.9	3	7002	00194830	01/04/1980 00:00	6	4	LESS THAN 30MPH	ON POLE	500	SINGLE ARM	NOT APPLICABLE	POLE MOUNTED	URBIS	AXIA 2 S1	WOODEN PO	WOOD	5	NOT APPLICABI	Not Applicable
46101535	TUNNEL ROAD	Wrawby Parish	501878.12	409166.87	4	7003	00194831	01/04/1980 00:00	6	4	LESS THAN 30MPH	ON POLE	500	SINGLE ARM	NOT APPLICABLE	POLE MOUNTED	URBIS	AXIA 2 S1	WOODEN PO	WOOD	5	NOT APPLICABI	Not Applicable
46101535	TUNNEL ROAD	Wrawby Parish	501846.59	409209.19	5	7004	00194832	01/04/1980 00:00	6	4	LESS THAN 30MPH	ON POLE	300	SINGLE ARM	NOT APPLICABLE	POLE MOUNTED	URBIS	AXIA 2 S1	WOODEN PO	WOOD	5	NOT APPLICABI	Not Applicable
46101535	TUNNEL ROAD	Wrawby Parish	501821.91	409242.96	6	7005	00194833	01/04/1988 00:00	6	4	LESS THAN 30MPH	ON POLE	500	SINGLE ARM	NOT APPLICABLE	POLE MOUNTED	URBIS	AXIA 2 S1	WOODEN PO	WOOD	5	NOT APPLICABI	Not Applicable
46101535	TUNNEL ROAD	Wrawby

46101560	VICTORIA DRIVE	Barton upon Humber Parish	502723.92	422424.03	12	7013	00195010	01/04/1975 00:00	5	2	NOT ON A ROAD	BACK OF FOOTPATH	0	POST TOP	NOT APPLICABLE	RIGID COLUMN	URBIS	AXIA 2 S1	PETITJEAN	SHEET STEEL	5	GALVANISED	NIDD
46101560	VICTORIA DRIVE	Barton upon Humber Parish	502731.75	422464.42	14	7012	00195009	01/04/2008 00:00	5	2	NOT ON A ROAD	BACK OF FOOTPATH	0	POST TOP	NOT APPLICABLE	MID HINGED	URBIS	AXIA 2 S1	PETITJEAN	SHEET STEEL	5	GALVANISED	LEVEN
46101560	VICTORIA DRIVE	Barton upon Humber Parish	502691.39	422521.47	16	7010	00195007	01/04/1975 00:00	5	2	NOT ON A ROAD	BACK OF FOOTPATH	0	POST TOP	NOT APPLICABLE	RIGID COLUMN	URBIS	AXIA 2 S1	PETITJEAN	SHEET STEEL	5	GALVANISED	NIDD
46101560	VICTORIA DRIVE	Barton upon Humber Parish	502694.9	422537.16	17	7009	00195006	01/04/1975 00:00	5	2	NOT ON A ROAD	BACK OF FOOTPATH	0	POST TOP	NOT APPLICABLE	RIGID COLUMN	URBIS	AXIA 2 S1	PETITJEAN	SHEET STEEL	5	GALVANISED	NIDD
46101560	VICTORIA DRIVE	Barton upon Humber Parish	502624.94	422536.82	2	7001	00194998	01/04/1975 00:00	5	2	LESS THAN 30MPH	BACK OF FOOTPATH	0	POST TOP	MID GREY	RIGID COLUMN	URBIS	AXIA 2 S1	PETITJEAN	SHEET STEEL	5	PAINTED	NIDD
46101560	VICTORIA DRIVE	Barton upon Humber Parish	502641.1	422531.67	3	7002	00194999	01/04/1975 00:00	5	2	NOT ON A ROAD	BACK OF FOOTPATH	0	POST TOP	MID GREY	RIGID COLUMN	URBIS	AXIA 2 S1	PETITJEAN	SHEET STEEL	5	PAINTED	NIDD
46101560	VICTORIA DRIVE	Barton upon Humber Parish	502618.85	422513.18	4	7003	00195000	01/04/1975 00:00	5	2	LESS THAN 30MPH	BACK OF FOOTPATH	0	POST TOP	MID GREY	RIGID COLUMN	URBIS	AXIA 2 S1	PETITJEAN	SHEET STEEL	5	PAINTED	NIDD
46101560	VICTORIA DRIVE	Barton upon Humber Parish	502601.82	422498.27	5	7004	00195001	01/04/1995 00:00	5	2	LESS THAN 30MPH	BACK OF FOOTPATH	0	POST TOP	MID GREY	RIGID COLUMN	URBIS	AXIA 2 S1	PETITJEAN	SHEET STEEL	5	PAINTED	NIDD
46101560	VICTORIA DRIVE	Barton upon Humber Parish	502635.87	422493.58	6	7005	00195002	01/04/1975 00:00	5	2	LESS THAN 30MPH	BACK OF FOOTPATH	0	POST TOP	MID GREY	RIGID COLUMN	URBIS	AXIA 2 S1	PETITJEAN	SHEET STEEL	5	PAINTED	NIDD
46101560	VICTORIA DRIVE	Barton upon Humber Parish	502661.94	422487.66	7	7006	00195003	01/04/1975 00:00	5	2	LESS THAN 30MPH	BACK OF FOOTPATH	0	POST TOP	MID GREY	RIGID COLUMN	URBIS	AXIA 2 S1	PETITJEAN	SHEET STEEL	5	PAINTED	NIDD
46101560	VICTORIA DRIVE	Barton upon Humber Parish	503062.02	422105.92	8	7007	00195004	01/04/1975 00:00	5	2	LESS THAN 30MPH	BACK OF FOOTPATH	0	POST TOP	MID GREY	RIGID COLUMN	URBIS	AXIA 2 S1	PETITJEAN	SHEET STEEL	5	PAINTED	NIDD
46101560	VICTORIA DRIVE	Barton upon Humber Parish	502699.69	422500.09	9	7008	00195005	01/04/1975 00:00	5	2	LESS THAN 30MPH	BACK OF FOOTPATH	0	POST TOP	MID GREY	RIGID COLUMN	URBIS	AXIA 2 S1	PETITJEAN	SHEET STEEL	5	PAINTED	NIDD
46101561	VICTORIA ROAD	Barnetby Le Wold Parish	505500.77	409957.15	1	7000	00195011	01/04/1978 00:00	3	2	LESS THAN 30MPH	BACK OF FOOTPATH	800	SINGLE ARM	NOT APPLICABLE	RIGID COLUMN	URBIS	AXIA 2 S1	PETITJEAN	SHEET STEEL	6	GALVANISED	DAER
46101561	VICTORIA ROAD	Barnetby Le Wold Parish	505735.3	409847.2	10	7009	00195020	01/04/2010 00:00	3	2	LESS THAN 30MPH	BACK OF FOOTPATH	500	SINGLE ARM	NOT APPLICABLE	RIGID COLUMN	URBIS	AXIA 2 S1	VALMONT ST	SHEET STEEL	8	GALVANISED	THAMES
46101561	VICTORIA ROAD	Barnetby Le Wold Parish	505761.2	409841.7	11	7010	00195021	01/04/2010 00:00	3	2	LESS THAN 30MPH	BACK OF FOOTPATH	500	SINGLE ARM	NOT APPLICABLE	RIGID COLUMN	URBIS	AXIA 2 S1	VALMONT ST	SHEET STEEL	8	GALVANISED	THAMES
46101561	VICTORIA ROAD	Barnetby Le Wold Parish	505789	409834	12	7011	00195022	01/04/2010 00:00	3	2	LESS THAN 30MPH	BACK OF FOOTPATH	500	SINGLE ARM	NOT APPLICABLE	RIGID COLUMN	URBIS	AXIA 2 S1	VALMONT ST	SHEET STEEL	8	GALVANISED	THAMES
46101561	VICTORIA ROAD	Barnetby Le Wold Parish	505826.6	409824.9	13	7012	00195023	01/04/2010 00:00	3	2	LESS THAN 30MPH	BACK OF FOOTPATH	500	SINGLE ARM	NOT APPLICABLE	RIGID COLUMN	URBIS	AXIA 2 S1	VALMONT ST	SHEET STEEL	8	GALVANISED	THAMES
46101561	VICTORIA ROAD	Barnetby Le Wold Parish	505857.5	409815.6	14	7013	00195024	01/04/2010 00:00	3	2	LESS THAN 30MPH	BACK OF FOOTPATH	500	SINGLE ARM	NOT APPLICABLE	RIGID COLUMN	URBIS	AXIA 2 S1	VALMONT ST	SHEET STEEL	8	GALVANISED	THAMES
46101561	VICTORIA ROAD	Barnetby Le Wold Parish	505885.4	409807	15	7014	00195025	01/04/2010 00:00	3	2	LESS THAN 30MPH	BACK OF FOOTPATH	500	SINGLE ARM	NOT APPLICABLE	RIGID COLUMN	URBIS	AXIA 2 S1	VALMONT ST	SHEET STEEL	8	GALVANISED	THAMES
46101561	VICTORIA ROAD	Barnetby Le Wold Parish	505914.7	409797.5	16	7015	00195026	01/04/2010 00:00	3	2	LESS THAN 30MPH	BACK OF FOOTPATH	500	SINGLE ARM	NOT APPLICABLE	RIGID COLUMN	URBIS	AXIA 2 S1	VALMONT ST	SHEET STEEL	8	GALVANISED	THAMES
46101561	VICTORIA ROAD	Barnetby Le Wold Parish	505944.1	409787.6	17	7016	00195027	01/04/2010 00:00	3	2	LESS THAN 30MPH	BACK OF FOOTPATH	500	SINGLE ARM	NOT APPLICABLE	RIGID COLUMN	URBIS	AXIA 2 S1	VALMONT ST	SHEET STEEL	8	GALVANISED	THAMES
46101561	VICTORIA ROAD	Barnetby Le Wold Parish	505977.18	409783.32	18	7017	00195028	01/04/2001 00:00	3	2	LESS THAN 30MPH	BACK OF FOOTPATH	0	POST TOP	NOT APPLICABLE	RIGID COLUMN	URBIS	AXIA 2 S1	MALLATITE	TUBULAR STEEL	6	GALVANISED	STEPPED TUBULAR
46101561	VICTORIA ROAD	Barnetby Le Wold Parish	505971.17	409771.58	19	7018	00195029	01/04/2001 00:00	3	2	LESS THAN 30MPH	BACK OF FOOTPATH	0	POST TOP	NOT APPLICABLE	RIGID COLUMN	URBIS	AXIA 2 S1	MALLATITE	TUBULAR STEEL	6	GALVANISED	STEPPED TUBULAR
46101561	VICTORIA ROAD	Barnetby Le Wold Parish	505514.76	409925.72	2	7001	00195012	01/04/2010 00:00	3	2	LESS THAN 30MPH	BACK OF FOOTPATH	500	SINGLE ARM	NOT APPLICABLE	RIGID COLUMN	URBIS	AXIA 2 S1	VALMONT ST	SHEET STEEL	8	GALVANISED	THAMES
46101561	VICTORIA ROAD	Barnetby Le Wold Parish	505535.76	409899.53	3	7002	00195013	01/04/2010 00:00	3	2	LESS THAN 30MPH	BACK OF FOOTPATH	500	SINGLE ARM	NOT APPLICABLE	RIGID COLUMN	URBIS	AXIA 2 S1	VALMONT ST	SHEET STEEL	8	GALVANISED	THAMES
46101561	VICTORIA ROAD	Barnetby Le Wold Parish	505561.4	409895.4	4	7003	00195014	01/04/2010 00:00	3	2	LESS THAN 30MPH	BACK OF FOOTPATH	500	SINGLE ARM	NOT APPLICABLE	RIGID COLUMN	URBIS	AXIA 2 S1	VALMONT ST	SHEET STEEL	8	GALVANISED	THAMES
46101561	VICTORIA ROAD	Barnetby Le Wold Parish	505590.6	409881.1	5	7004	00195015	01/04/2010 00:00	3	2	LESS THAN 30MPH	BACK OF FOOTPATH	500	SINGLE ARM	NOT APPLICABLE	RIGID COLUMN	URBIS	AXIA 2 S1	VALMONT ST	SHEET STEEL	8	GALVANISED	THAMES
46101561	VICTORIA ROAD	Barnetby Le Wold Parish	505618.8	409880	6	7005	00195016	01/04/2010 00:00	3	2	LESS THAN 30MPH	BACK OF FOOTPATH	500	SINGLE ARM	NOT APPLICABLE	RIGID COLUMN	URBIS	AXIA 2 S1	VALMONT ST	SHEET STEEL	8	GALVANISED	THAMES
46101561	VICTORIA ROAD	Barnetby Le Wold Parish	505648.7	409874.6	7	7006	00195017	01/04/2010 00:00	3	2	LESS THAN 30MPH	FRONT OF FOOTPATH	500	SINGLE ARM	NOT APPLICABLE	RIGID COLUMN	URBIS	AXIA 2 S1	VALMONT ST	SHEET STEEL	8	GALVANISED	THAMES
46101561	VICTORIA ROAD	Barnetby Le Wold Parish	505675.4	409863.2	8	7007	00195018	01/04/2010 00:00	3	2	LESS THAN 30MPH	BACK OF FOOTPATH	500	SINGLE ARM	NOT APPLICABLE	RIGID COLUMN	URBIS	AXIA 2 S1	VALMONT ST	SHEET STEEL	8	GALVANISED	THAMES
46101561	VICTORIA ROAD	Barnetby Le Wold Parish	505707.82	409869.09	9	7008	00195019	15/05/2018 00:00	3	2	LESS THAN 30MPH	ON POLE	300	SINGLE ARM	NOT APPLICABLE	POLE MOUNTED	URBIS	AXIA 2 S1	WOODEN PO	WOOD	6	NOT APPLICABI	PUDSEY DIAMOND
46101562	VICTORY WAY	Barton upon Humber Parish	503884.25	422626.98	1	7000	00195030	01/04/1988 00:00	5	2	LESS THAN 30MPH	BACK OF FOOTPATH	1250	SINGLE ARM	MID GREY	RIGID COLUMN	URBIS	AXIA 2 S1	PETITJEAN	SHEET STEEL	8	PAINTED	THAMES
46101562	VICTORY WAY	Barton upon Humber Parish	503907.74	422655.47	2	7001	00195031	01/04/1988 00:00	5	2	LESS THAN 30MPH	BACK OF FOOTPATH	1250	SINGLE ARM	MID GREY	RIGID COLUMN	URBIS	AXIA 2 S1	PETITJEAN	SHEET STEEL	8	PAINTED	THAMES
46101562	VICTORY WAY	Barton upon Humber Parish	503911.28	422686.87	3	7002	00195032	01/04/1988 00:00	5	2	LESS THAN 30MPH	BACK OF FOOTPATH	1250	SINGLE ARM	MID GREY	RIGID COLUMN	URBIS	AXIA 2 S1	PETITJEAN	SHEET STEEL	8	PAINTED	THAMES
46101562	VICTORY WAY	Barton upon Humber Parish	503908.56	422722.54	4	7003	00195033	01/04/1988 00:00	5	2	LESS THAN 30MPH	BACK OF FOOTPATH	1250	SINGLE ARM	MID GREY	RIGID COLUMN	URBIS	AXIA 2 S1	PETITJEAN	SHEET STEEL	8	PAINTED	THAMES
46101563	SCHOLARS WALK	Brigg Parish	500153.79	407820.02	1	7001	04200814	30/10/2024 00:00	3	1	LESS THAN 30MPH	BACK OF FOOTPATH	NA	POST TOP	NOT APPLICABLE	RIGID COLUMN	PHILIPS	STELA LONG 14 LED	MALLATITE	TUBULAR STEEL	6	GALVANISED	TUBULAR
46101563	SCHOLARS WALK	Brigg Parish	500180.66	407803.45	2	7002	04200815	30/10/2024 00:00	3	1	LESS THAN 30MPH	BACK OF FOOTPATH	NA	POST TOP	NOT APPLICABLE	RIGID COLUMN	PHILIPS	STELA LONG 14 LED	MALLATITE	TUBULAR STEEL	6	GALVANISED	TUBULAR
46101563	SCHOLARS WALK	Brigg Parish	500197.38	407794.15	3	7003	04200816	30/10/2024 00:00	3	1	LESS THAN 30MPH	BACK OF FOOTPATH	NA	POST TOP	NOT APPLICABLE	RIGID COLUMN	PHILIPS	STELA LONG 14 LED	MALLATITE	TUBULAR STEEL	6	GALVANISED	TUBULAR
46101563	SCHOLARS WALK	Brigg Parish	500185.17	407773.38	4	7004	04200817	30/10/2024 00:00	3	1	LESS THAN 30MPH	BACK OF FOOTPATH	NA	POST TOP	NOT APPLICABLE	RIGID COLUMN	PHILIPS	STELA LONG 14 LED	MALLATITE	TUBULAR STEEL	6	GALVANISED	TUBULAR
46101564	VILLE ROAD	Scunthorpe	490681.27	408649.83	1	7000	00195034	01/04/1993 00:00	1	3	LESS THAN 30MPH	FRONT OF FOOTPATH	800	SINGLE ARM	NOT APPLICABLE	RIGID COLUMN	URBIS	AXIA 2 S1	PETITJEAN	SHEET STEEL	6	GALVANISED	DAER
46101564	VILLE ROAD	Scunthorpe	490937.31	408651.7	10	7009	00195043	01/04/1993 00:00	1	3	LESS THAN 30MPH	BACK OF FOOTPATH	800	SINGLE ARM	NOT APPLICABLE	RIGID COLUMN	URBIS	AXIA 2 S1	PETITJEAN	SHEET STEEL	6	GALVANISED	DAER
46101564	VILLE ROAD	Scunthorpe	490961.01	408646.78	11	7010	00195044	01/04/1993 00:00	1	3	LESS THAN 30MPH	BACK OF FOOTPATH	800	SINGLE ARM	NOT APPLICABLE	RIGID COLUMN	URBIS	AXIA 2 S1	PETITJEAN	SHEET STEEL	6	GALVANISED	DAER
46101564	VILLE ROAD	Scunthorpe	490703.24	408638.84	2	7001	00195035	01/04/1993 00:00	1	3	LESS THAN 30MPH	BACK OF FOOTPATH	800	SINGLE ARM	NOT APPLICABLE	RIGID COLUMN	URBIS	AXIA 2 S1	PETITJEAN	SHEET STEEL	6	GALVANISED	DAER
46101564	VILLE ROAD	Scunthorpe	490739.23	408639.23	3	7002	00195036	01/04/1993 00:00	1	3	LESS THAN 30MPH	BACK OF FOOTPATH	800	SINGLE ARM	NOT APPLICABLE	RIGID COLUMN	URBIS	AXIA 2 S1	PETITJEAN	SHEET STEEL	6	GALVANISED	DAER
46101564	VILLE ROAD	Scunthorpe	490767.91	408650.19	4	7003	00195037	01/04/1993 00:00	1	3	LESS THAN 30MPH	BACK OF FOOTPATH	800	SINGLE ARM	NOT APPLICABLE	RIGID COLUMN	URBIS	AXIA 2 S1	PETITJEAN	SHEET STEEL	6	GALVANISED	DAER
46101564	VILLE ROAD	Scunthorpe	490799.09	408639.25	5	7004	00195038	01/04/1993 00:00	1	3	LESS THAN 30MPH	BACK OF FOOTPATH	800	SINGLE ARM	NOT APPLICABLE	RIGID COLUMN	URBIS	AXIA 2 S1	PETITJEAN	SHEET STEEL	6	GALVANISED	DAER
46101564	VILLE ROAD	Scunthorpe	490825.63	408650.64	6	7005	00195039	01/04/1993 00:00	1	3	LESS THAN 30MPH	BACK OF FOOTPATH	800	SINGLE ARM	NOT APPLICABLE	RIGID COLUMN	URBIS	AXIA 2 S1	PETITJEAN	SHEET STEEL	6	GALVANISED	DAER
46101564	VILLE ROAD	Scunthorpe	490858.85	408640.06	7	7006	00195040	01/04/1993 00:00	1	3	LESS THAN 30MPH	BACK OF FOOTPATH	800	SINGLE ARM	NOT APPLICABLE	RIGID COLUMN	URBIS	AXIA 2 S1	PETITJEAN	SHEET STEEL	6	GALVANISED	DAER
46101564	VILLE ROAD	Scunthorpe	490882.52	408639.9	8	7007	00195041	01/04/1993 00:00	1	3	LESS THAN 30MPH	BACK OF FOOTPATH	800	SINGLE ARM	NOT APPLICABLE	RIGID COLUMN	URBIS	AXIA 2 S1	PETITJEAN	SHEET STEEL	6	GALVANISED	DAER
46101564	VILLE ROAD	Scunthorpe	490909.74	408640.23	9	7008	00195042	01/04/1993 00:00	1	3	LESS THAN 30MPH	BACK OF FOOTPATH	800	SINGLE ARM	NOT APPLICABLE	RIGID COLUMN	URBIS	AXIA 2 S1	PETITJEAN	SHEET STEEL	6	GALVANISED	DAER
46101565	VINEGARTH	Epworth Parish	478640.09	403955.74	1	7000	00195047	01/04/1991 00:00	5	3	LESS THAN 30MPH	BACK OF FOOTPATH	0	POST TOP	NOT APPLICABLE	RIGID COLUMN	URBIS	AXIA 2 S1	PETITJEAN	TUBULAR STEEL	5	GALVANISED	METRO
46101565	VINEGARTH	Epworth Parish	478609.75	403954.56	2	7001	00195048	01/04/1991 00:00	5	3	LESS THAN 30MPH	BACK OF FOOTPATH	0	POST TOP	NOT APPLICABLE	RIGID COLUMN	URBIS	AXIA 2 S1	PETITJEAN	TUBULAR STEEL	5	GALVANISED	METRO
46101565	VINEGARTH	Epworth Parish	478579.19	403937.58	3	7002	00195049	01/04/1991 00:00	5	3	LESS THAN 30MPH	BACK OF FOOTPATH	0	POST TOP	NOT APPLICABLE	RIGID COLUMN	URBIS	AXIA 2 S1	PETITJEAN	TUBULAR STEEL	5	GALVANISED	METRO
46101565	VINEGARTH	Epworth Parish	478553.76	403927.6	4	7003	00195050	01/04/1991 00:00	5	3	LESS THAN 30MPH	BACK OF FOOTPATH	0	POST TOP	NOT APPLICABLE	RIGID COLUMN	URBIS	AXIA 2 S1	PETITJEAN	TUBULAR STEEL	5	GALVANISED	METRO
46101565	VINEGARTH	Epworth Parish	478525.7	403920.68	5	7004	00195051	01/04/1991 00:00	5	3	LESS THAN 30MPH	VERGE	0	POST TOP	NOT APPLICABLE	RIGID COLUMN	URBIS	AXIA 2 S1	PETITJEAN	TUBULAR STEEL	5	GALVANISED	METRO
46101565	VINEGARTH	Epworth Parish	478504.47	403924.19	6	7005	00195052	01/04/1991 00:00	5	3	LESS THAN 30MPH	VERGE	0	POST TOP	NOT APPLICABLE	RIGID COLUMN	URBIS	AXIA 2 S1	PETITJEAN	TUBULAR STEEL	5	GALVANISED	METRO
46101565	VINEGARTH	Epworth Parish	478482.1	403910.82	7	7006	00195053	01/04/1991 00:00	5	3	LESS THAN 30MPH	VERGE	0	POST TOP	NOT APPLICABLE	RIGID COLUMN	URBIS	AXIA 2 S1	PETITJEAN	TUBULAR STEEL	5	GALVANISED	METRO
46101565	VINEGARTH	Epworth Parish	478468.57	403899.02	8	7007	00195054	01/04/1991 00:00	5	3	LESS THAN 30MPH	VERGE	0	POST TOP	NOT APPLICABLE	RIGID COLUMN	URBIS	AXIA 2 S1	PETITJEAN	TUBULAR STEEL	5	GALVANISED	METRO
46101565	VINEGARTH	Epworth Parish	478433.82	403899	9	7008	00195055	01/04/1991 00:00	5	3	LESS THAN 30MPH	VERGE	0	POST TOP	NOT APPLICABLE	RIGID COLUMN	URBIS	AXIA 2 S1	PETITJEAN	TUBULAR STEEL	5	GALVANISED	METRO
46101566	WADDINGTON DRIVE	Bottesford Parish	488184.38	407293.39	1	7000	00195057	06/04/2017 00:00	3	1	LESS THAN 30MPH	BACK OF FOOTPATH	0	POST TOP	NOT APPLICABLE	RIGID COLUMN	HOLOPHANE	VMAX V1 L024	VALMONT ST	TUBULAR STEEL	6	GALVANISED	TUBULAR
46101566	WADDINGTON DRIVE	Bottesford Parish	488171.17	407327.99	2	7001	00195058	06/04/2017 00:00	3	1	LESS THAN 30MPH	FRONT OF FOOTPATH	0	POST TOP	NOT APPLICABLE	RIGID COLUMN	HOLOPHANE	VMAX V1 L024	VALMONT ST	TUBULAR STEEL	6	GALVANISED	TUBULAR
46101566	WADDINGTON DRIVE	Bottesford Parish	488161.31	407353.27	3	7002	00195059	06/04/2017 00:00	3	1	LESS THAN 30MPH	FRONT OF FOOTPATH	0	POST TOP	NOT APPLICABLE	RIGID COLUMN	HOLOPHANE	VMAX V1 L024	VALMONT ST	TUBULAR STEEL	6	GALVANISED	TUBULAR
46101566	WADDINGTON DRIVE	Bottesford Parish	488150.19	407381.81	4	7003	00195060	06/04/2017 00:00	3	1	LESS THAN 30MPH	FRONT OF FOOTPATH	0	POST TOP	NOT APPLICABLE	RIGID COLUMN	HOLOPHANE	VMAX V1 L024	VALMONT ST	TUBULAR STEEL	6	GALVANISED	TUBULAR
46101567	WALCOT ROAD	Alkborough Parish	488172.95	421553.47	1	7000	00195061	01/04/2016 00:00	1	2	LESS THAN 30MPH	ON POLE	300	SINGLE ARM	NOT APPLICABLE	POLE MOUNTED	URBIS	AXIA 2 S1	WOODEN PO	WOOD	5	NOT APPLICABI	Not Applicable
46101567	WALCOT ROAD	Alkborough Parish	488148.02	421509.82	2	7001	00195062	30/05/2018 00:00	1	2	LESS THAN 30MPH	ON POLE	300	SINGLE ARM	NOT APPLICABLE	POLE MOUNTED	URBIS	AXIA 2 S1	WOODEN PO	WOOD	5	NOT APPLICABI	PUDSEY DIAMOND
46101567	WALCOT ROAD	Alkborough Parish	488129.8	421482.68	3	7002	00195063	01/04/1973 00:00	1	2	LESS THAN 30MPH	ON POLE	800	SINGLE ARM	NOT APPLICABLE	POLE MOUNTED	URBIS	AXIA 2 S1	WOODEN PO	WOOD	5	NOT APPLICABI	Not Applicable
46101567	WALCOT ROAD	Alkborough Parish	488100.81	421440.57	4	7003	00195064	01/04/1973 00:00	1	2	LESS THAN 30MPH	ON POLE	800	SINGLE ARM	NOT APPLICABLE	POLE MOUNTED	URBIS	AXIA 2 S1	WOODEN PO	WOOD	5	NOT APPLICABI	Not Applicable
46101567	WALCOT ROAD	Alkborough Parish	488085.17	421409.72	5	7004	00195065	30/05/2018 00:00	1	2	LESS THAN 30MPH	ON POLE	300	SINGLE ARM	NOT APPLICABLE	POLE MOUNTED	URBIS	AXIA 2 S1	WOODEN PO	WOOD	5	NOT APPLICABI	PUDSEY DIAMOND
46101567	WALCOT ROAD	Alkborough Parish	488059.79	421369.18	6	7005	00195066	01/04/2002 00:00	1	2	LESS THAN 30MPH	VERGE	300	SINGLE ARM	NOT APPLICABLE	RIGID COLUMN	URBIS	AXIA 2 S1	MALLATITE	TUBULAR STEEL	6	GALVANISED	STEPPED TUBULAR
46101568	WALESBY ROAD	Scunthorpe	488205.3	407910.14	1	7000	00195067	16/12/2020 00:00	3	4	LESS THAN 30MPH	BACK OF FOOTPATH	0	POST TOP	NOT APPLICABLE	RIGID COLUMN	URBIS	AXIA 2 S1	MALLATITE	TUBULAR STEEL	6	GALVANISED	TUBULAR
46101568	WALESBY ROAD	Scunthorpe	488193.39	407947.53	2	7001	00195068	16/12/2020 00:00	3	4	LESS THAN 30MPH	BACK OF FOOTPATH	0	POST TOP	NOT APPLICABLE	RIGID COLUMN	URBIS	AXIA 2 S1	MALLATITE	TUBULAR STEEL	6	GALVANISED	TUBULAR
46101568	WALESBY ROAD	Scunthorpe	488173.48	407974.95	3	7002	00195069	16/12/2020 00:00	3	4	LESS THAN 30MPH	BACK OF FOOTPATH	0	POST TOP	NOT APPLICABLE	RIGID COLUMN	URBIS	AXIA 2 S1	MALLATITE	TUBULAR STEEL	6	GALVANISED	TUBULAR
46101568	WALESBY ROAD	Scunthorpe	488164.71	408014.85	4	7003	00195070	16/12/2020 00:00	3	4	LESS THAN 30MPH	BACK OF FOOTPATH	0	POST TOP	NOT APPLICABLE	RIGID COLUMN	URBIS	AXIA 2 S1	MALLATITE	TUBULAR STEEL	6	GALVANISED	TUBULAR
46101570	WALKER DRIVE	Winterton Parish	492494.12	418774.27	1	7000	00195072	01/04/1988 00:00	1	1	LESS THAN 30MPH	BACK OF FOOTPATH	0	POST TOP	MID GREY	RIGID COLUMN	URBIS	AXIA 2 S1	PETITJEAN	SHEET STEEL	5	PAINTED	NIDD
46101570	WALKER DRIVE	Winterton Parish	492466.13	418776.28	2	7001	00195073	01/04/1988 00:00	1	1	LESS THAN 30MPH	BACK OF FOOTPATH	0	POST TOP	MID GREY	RIGID COLUMN	URBIS	AXIA 2 S1	PETITJEAN	SHEET STEEL	5	PAINTED	NIDD
46101570	WALKER DRIVE	Winterton Parish	492438.67	418776.15	3	7002	00195074	01/04/1988 00:00	1	1	LESS THAN 30MPH	BACK OF FOOTPATH	0	POST TOP	MID GREY	RIGID COLUMN	URBIS	AXIA 2 S1	PETITJEAN	SHEET STEEL	5	PAINTED	NIDD
46101570	WALKER DRIVE	Winterton Parish	492407.98	418772.38	4	7003	00195075	01/04/1988 00:00	1	1	LESS THAN 30MPH	VERGE	0	POST TOP	MID GREY	RIGID COLUMN	URBIS	AXIA 2 S1	PETITJEAN	SHEET STEEL	5	PAINTED	NIDD
46101570	WALKER DRIVE	Winterton Parish	492386.02	418761.47	5	7004	00195076	01/04/1988 00:00	1	1	LESS THAN 30MPH	VERGE	0	POST TOP	MID GREY	RIGID COLUMN	URBIS	AXIA 2 S1	PETITJEAN	SHEET STEEL	5	PAINTED	NIDD
46101570	WALKER DRIVE	Winterton Parish	492359.63	418761.83	6	7005	00195077	01/04/1988 00:00	1	1	LESS THAN 30MPH	VERGE	0	POST TOP	MID GREY	RIGID COLUMN	URBIS	AXIA 2 S1	PETITJEAN	SHEET STEEL	5	PAINTED	NIDD
46101571	WALKERS WAY	Ulceby Parish	511203.99	414974.65	1	7000	00195078	01/04/2010 00:00	3	1	LESS THAN 30MPH	VERGE	0	POST TOP	NOT APPLICABLE	RIGID COLUMN	URBIS	AXIA 2 S1	MALLATITE	TUBULAR STEEL	6	GALVANISED	TUBULAR
46101571	WALKERS WAY	Ulceby Parish	511216.9	415002.56	2	7001	00195079	01/04/1995 00:00	3	1	LESS THAN 30MPH	FRONT OF FOOTPATH	0	POST TOP	MID GREY	RIGID COLUMN	URBIS	AXIA 2 S1	PETITJEAN	SHEET STEEL	5	PAINTED	NIDD
46101571	WALKERS WAY	Ulceby Parish	511204.3	415032.1	3	7002	00195080	05/03/2021 00:00	3	1	LESS THAN 30MPH	BACK OF FOOTPATH	0	POST TOP	NOT APPLICABLE	RIGID COLUMN	URBIS	AXIA 2 S1	MALLATITE	TUBULAR STEEL	6	GALVANISED	TUBULAR
46101572	WALNUT DRIVE	Scawby Parish	497158.46	404921.69	1	7000	00195081	01/04/1980 00:00	2	2	LESS THAN 30MPH	VERGE	0	POST TOP	MID GREY	RIGID COLUMN	URBIS	AXIA 2 S1	PETITJEAN	SHEET STEEL	5	PAINTED	NIDD
46101572	WALNUT DRIVE	Scawby Parish	497184.32	404919.73	2	7001	00195082	01/04/1980 00:00	2	2	LESS THAN 30MPH	VERGE	0	POST TOP	MID GREY	RIGID COLUMN	URBIS	AXIA 2 S1	PETITJEAN	SHEET STEEL	5	PAINTED	NIDD
46101572	WALNUT DRIVE	Scawby Parish	497211.44	404919.46	3	7002	00195083	01/04/1980 00:00	2	2	LESS THAN 30MPH	BACK OF FOOTPATH	0	POST TOP	MID GREY	RIGID COLUMN	URBIS	AXIA 2 S1	PETITJEAN	SHEET STEEL	5	PAINTED	NIDD
46101572	WALNUT DRIVE	Scawby Parish	497231.52	404939.73	4	7003	00195084	01/04/1980 00:00	2	2	LESS THAN 30MPH	BACK OF FOOTPATH	0	POST TOP	MID GREY	RIGID COLUMN	URBIS	AXIA 2 S1	PETITJEAN	SHEET STEEL	5	PAINTED	NIDD
46101572	WALNUT DRIVE	Scawby Parish	497240.68	404969.66	5	7004	00195085	01/04/1980 00:00	2	2	LESS THAN 30MPH	BACK OF FOOTPATH	0	POST TOP	MID GREY	RIGID COLUMN	URBIS	AXIA 2 S1	PETITJEAN	SHEET STEEL	5	PAINTED	NIDD
46101572	WALNUT DRI

46101596	WENSLEYDALE ROAD	Scunthorpe	491229.01	408619.88	3	7002	00195245	01/04/2013 00:00	1	3	LESS THAN 30MPH	BACK OF FOOTPATH	0	POST TOP	NOT APPLICABLE	RIGID COLUMN	URBIS	AXIA 2 S1	MALLATITE	TUBULAR STEEL	6	GALVANISED	TUBULAR
46101596	WENSLEYDALE ROAD	Scunthorpe	491258.26	408622.11	4	7003	00195246	01/04/2010 00:00	1	3	LESS THAN 30MPH	BACK OF FOOTPATH	0	POST TOP	NOT APPLICABLE	RIGID COLUMN	URBIS	AXIA 2 S1	MALLATITE	TUBULAR STEEL	6	GALVANISED	TUBULAR
46101596	WENSLEYDALE ROAD	Scunthorpe	491287.98	408622.04	5	7004	00195247	01/04/2010 00:00	1	3	LESS THAN 30MPH	FRONT OF FOOTPATH	0	POST TOP	NOT APPLICABLE	RIGID COLUMN	URBIS	AXIA 2 S1	MALLATITE	TUBULAR STEEL	6	GALVANISED	TUBULAR
46101596	WENSLEYDALE ROAD	Scunthorpe	491306.76	408598.35	6	7005	00195248	01/04/2013 00:00	1	3	LESS THAN 30MPH	BACK OF FOOTPATH	0	POST TOP	NOT APPLICABLE	RIGID COLUMN	URBIS	AXIA 2 S1	MALLATITE	TUBULAR STEEL	6	GALVANISED	TUBULAR
46101596	WENSLEYDALE ROAD	Scunthorpe	491318.41	408558.27	7	7006	00195249	01/04/2013 00:00	1	3	LESS THAN 30MPH	BACK OF FOOTPATH	0	POST TOP	NOT APPLICABLE	RIGID COLUMN	URBIS	AXIA 2 S1	MALLATITE	TUBULAR STEEL	6	GALVANISED	TUBULAR
46101596	WENSLEYDALE ROAD	Scunthorpe	491322.63	408536.17	8	7007	00195250	21/01/2022 00:00	1	3	LESS THAN 30MPH	BACK OF FOOTPATH	0	POST TOP	NOT APPLICABLE	RIGID COLUMN	URBIS	AXIA 2 S1	MALLATITE	TUBULAR STEEL	6	GALVANISED	TUBULAR
46101596	WENSLEYDALE ROAD	Scunthorpe	491309.33	408512.47	9	7008	00195251	01/04/2013 00:00	1	3	LESS THAN 30MPH	BACK OF FOOTPATH	0	POST TOP	NOT APPLICABLE	RIGID COLUMN	URBIS	AXIA 2 S1	MALLATITE	TUBULAR STEEL	6	GALVANISED	TUBULAR
46101597	WENTWORTH CRESCENT	New Holland Parish	508271.92	423772.93	1	7000	00195252	01/04/1985 00:00	4	1	LESS THAN 30MPH	BACK OF FOOTPATH	0	POST TOP	MID GREY	RIGID COLUMN	URBIS	AXIA 2 S1	PETITJEAN	SHEET STEEL	5	PAINTED	NIDD
46101597	WENTWORTH CRESCENT	New Holland Parish	508265.64	423802.28	2	7001	00195253	03/03/2021 00:00	4	1	LESS THAN 30MPH	BACK OF FOOTPATH	0	POST TOP	NOT APPLICABLE	RIGID COLUMN	URBIS	AXIA 2 S1	MALLATITE	TUBULAR STEEL	6	GALVANISED	TUBULAR
46101597	WENTWORTH CRESCENT	New Holland Parish	508239.93	423811.08	3	7002	00195254	01/04/1985 00:00	4	1	LESS THAN 30MPH	BACK OF FOOTPATH	0	POST TOP	MID GREY	RIGID COLUMN	URBIS	AXIA 2 S1	PETITJEAN	SHEET STEEL	5	PAINTED	NIDD
46101597	WENTWORTH CRESCENT	New Holland Parish	508211.86	423802.76	4	7003	00195255	01/04/1985 00:00	4	1	LESS THAN 30MPH	BACK OF FOOTPATH	0	POST TOP	MID GREY	RIGID COLUMN	URBIS	AXIA 2 S1	PETITJEAN	SHEET STEEL	5	PAINTED	NIDD
46101598	WENTWORTH DRIVE	Messingham Parish	489268.69	404328.18	1	7000	00195256	01/04/1990 00:00	4	1	LESS THAN 30MPH	BACK OF FOOTPATH	0	POST TOP	LIGHT GREY	RIGID COLUMN	URBIS	AXIA 2 S1	PETITJEAN	SHEET STEEL	5	PAINTED	NIDD
46101598	WENTWORTH DRIVE	Messingham Parish	489271.37	404297.27	2	7001	00195257	01/04/1990 00:00	4	1	LESS THAN 30MPH	BACK OF FOOTPATH	0	POST TOP	LIGHT GREY	RIGID COLUMN	URBIS	AXIA 2 S1	PETITJEAN	SHEET STEEL	5	PAINTED	NIDD
46101598	WENTWORTH DRIVE	Messingham Parish	489280.24	404264.47	3	7002	00195258	01/04/1990 00:00	4	1	LESS THAN 30MPH	BACK OF FOOTPATH	0	POST TOP	LIGHT GREY	RIGID COLUMN	URBIS	AXIA 2 S1	PETITJEAN	SHEET STEEL	5	PAINTED	NIDD
46101599	WENTWORTH ROAD	Bottesford Parish	487702.65	406982.16	1	7000	00195259	01/04/2010 00:00	3	1	LESS THAN 30MPH	BACK OF FOOTPATH	0	POST TOP	NOT APPLICABLE	RIGID COLUMN	URBIS	AXIA 2 S1	MALLATITE	TUBULAR STEEL	5	GALVANISED	TUBULAR
46101599	WENTWORTH ROAD	Bottesford Parish	487660.58	406992.39	2	7001	00195260	01/04/1988 00:00	3	1	LESS THAN 30MPH	BACK OF FOOTPATH	300	SINGLE ARM	NOT APPLICABLE	RIGID COLUMN	URBIS	AXIA 2 S1	PETITJEAN	SHEET STEEL	5	GALVANISED	DAER
46101599	WENTWORTH ROAD	Bottesford Parish	487619.98	406991.51	3	7002	00195261	01/04/1988 00:00	3	1	LESS THAN 30MPH	BACK OF FOOTPATH	300	SINGLE ARM	NOT APPLICABLE	RIGID COLUMN	URBIS	AXIA 2 S1	MALLATITE	TUBULAR STEEL	5	GALVANISED	STEPPED TUBULAR
46101599	WENTWORTH ROAD	Bottesford Parish	487583.55	406977.96	4	7003	00195262	01/04/2010 00:00	3	1	LESS THAN 30MPH	BACK OF FOOTPATH	0	POST TOP	NOT APPLICABLE	RIGID COLUMN	URBIS	AXIA 2 S1	MALLATITE	TUBULAR STEEL	5	GALVANISED	TUBULAR
46101599	WENTWORTH ROAD	Bottesford Parish	487595.11	407022.31	5	7004	00195263	01/04/1980 00:00	3	1	LESS THAN 30MPH	BACK OF FOOTPATH	0	POST TOP	NOT APPLICABLE	RIGID COLUMN	URBIS	AXIA 2 S1	MALLATITE	TUBULAR STEEL	5	GALVANISED	STEPPED TUBULAR
46101600	WESLEY CLOSE	Epworth Parish	478606.75	403941.4	1	7000	00195264	01/04/1991 00:00	5	3	LESS THAN 30MPH	VERGE	0	POST TOP	NOT APPLICABLE	RIGID COLUMN	URBIS	AXIA 2 S1	PETITJEAN	TUBULAR STEEL	5	GALVANISED	METRO
46101600	WESLEY CLOSE	Epworth Parish	478618.85	403921.51	2	7001	00195265	01/04/1991 00:00	5	3	LESS THAN 30MPH	VERGE	0	POST TOP	NOT APPLICABLE	RIGID COLUMN	URBIS	AXIA 2 S1	PETITJEAN	TUBULAR STEEL	5	GALVANISED	METRO
46101601	WESLEY CLOSE	Winterton Parish	492666.72	418834.44	1	7000	00195266	01/04/2009 00:00	1	1	LESS THAN 30MPH	VERGE	0	POST TOP	NOT APPLICABLE	RIGID COLUMN	URBIS	AXIA 2 S1	MALLATITE	TUBULAR STEEL	6	GALVANISED	TUBULAR
46101601	WESLEY CLOSE	Winterton Parish	492670.42	418796.51	2	7001	00195267	01/04/2012 00:00	1	1	LESS THAN 30MPH	VERGE	0	POST TOP	NOT APPLICABLE	RIGID COLUMN	URBIS	AXIA 2 S1	MALLATITE	TUBULAR STEEL	6	GALVANISED	TUBULAR
46101601	WESLEY CLOSE	Winterton Parish	492670.59	418769.99	3	7002	00195268	01/04/2012 00:00	1	1	LESS THAN 30MPH	VERGE	0	POST TOP	NOT APPLICABLE	RIGID COLUMN	URBIS	AXIA 2 S1	MALLATITE	TUBULAR STEEL	6	GALVANISED	TUBULAR
46101601	WESLEY CLOSE	Winterton Parish	492672.37	418745.39	4	7003	00195269	01/04/2012 00:00	1	1	LESS THAN 30MPH	VERGE	0	POST TOP	NOT APPLICABLE	RIGID COLUMN	URBIS	AXIA 2 S1	MALLATITE	TUBULAR STEEL	6	GALVANISED	TUBULAR
46101601	WESLEY CLOSE	Winterton Parish	492674.68	418714.04	5	7004	00195270	01/04/1980 00:00	1	1	LESS THAN 30MPH	BACK OF FOOTPATH	500	SINGLE ARM	NOT APPLICABLE	RIGID COLUMN	URBIS	AXIA 2 S1	PETITJEAN	SHEET STEEL	5	GALVANISED	DAER
46101601	WESLEY CLOSE	Winterton Parish	492682.75	418694.95	6	7005	00195271	01/04/2008 00:00	1	1	LESS THAN 30MPH	BACK OF FOOTPATH	0	POST TOP	NOT APPLICABLE	MID HINGED	URBIS	AXIA 2 S1	PETITJEAN	SHEET STEEL	5	GALVANISED	LEVEN
46101601	WESLEY CLOSE	Winterton Parish	492686.32	418658.07	7	7006	00195272	01/04/2008 00:00	1	1	LESS THAN 30MPH	BACK OF FOOTPATH	0	POST TOP	NOT APPLICABLE	RIGID COLUMN	URBIS	AXIA 2 S1	PETITJEAN	SHEET STEEL	5	GALVANISED	THAMES
46101602	WESLEY ROAD	Brigg Parish	500069.37	407415.3	1	7000	00195273	01/04/1993 00:00	2	3	LESS THAN 30MPH	BACK OF FOOTPATH	1250	SINGLE ARM	DARK GREY	RIGID COLUMN	URBIS	AXIA 2 S1	PETITJEAN	SHEET STEEL	10	PAINTED	THAMES
46101602	WESLEY ROAD	Brigg Parish	500083.37	407445.06	2	7001	00195274	01/04/1993 00:00	2	3	LESS THAN 30MPH	BACK OF FOOTPATH	800	SINGLE ARM	NOT APPLICABLE	RIGID COLUMN	URBIS	AXIA 2 S1	PETITJEAN	SHEET STEEL	6	GALVANISED	DAER
46101602	WESLEY ROAD	Brigg Parish	500084.79	407481.42	3	7002	00195275	01/04/1993 00:00	2	3	LESS THAN 30MPH	BACK OF FOOTPATH	800	SINGLE ARM	NOT APPLICABLE	RIGID COLUMN	URBIS	AXIA 2 S1	PETITJEAN	SHEET STEEL	6	GALVANISED	DAER
46101603	WESLEY ROAD	Scunthorpe	491093.79	409070.78	1FP	7000	00195276	12/02/2021 00:00	3	2	LESS THAN 30MPH	BACK OF FOOTPATH	0	POST TOP	NOT APPLICABLE	RIGID COLUMN	URBIS	AXIA 2 S1	MALLATITE	TUBULAR STEEL	6	GALVANISED	TUBULAR
46101603	WESLEY ROAD	Scunthorpe	491118.2	409067.12	2	7001	00195277	01/04/1980 00:00	3	2	LESS THAN 30MPH	VERGE	0	POST TOP	NOT APPLICABLE	RIGID COLUMN	URBIS	AXIA 2 S1	PETITJEAN	SHEET STEEL	5	GALVANISED	NIDD
46101603	WESLEY ROAD	Scunthorpe	491119.16	409029.24	3	7002	00195278	01/04/1990 00:00	3	2	LESS THAN 30MPH	VERGE	0	POST TOP	NOT APPLICABLE	RIGID COLUMN	URBIS	AXIA 2 S1	MALLATITE	TUBULAR STEEL	5	GALVANISED	STEPPED TUBULAR
46101603	WESLEY ROAD	Scunthorpe	491088.44	408996.31	4	7003	00195279	01/04/1990 00:00	3	2	LESS THAN 30MPH	VERGE	0	POST TOP	NOT APPLICABLE	RIGID COLUMN	URBIS	AXIA 2 S1	MALLATITE	TUBULAR STEEL	5	GALVANISED	STEPPED TUBULAR
46101603	WESLEY ROAD	Scunthorpe	491083.13	408967.84	5	7004	00195280	01/04/2005 00:00	3	2	LESS THAN 30MPH	VERGE	0	POST TOP	NOT APPLICABLE	RIGID COLUMN	HOLOPHANE	VMAX V1 L024	MALLATITE	TUBULAR STEEL	5	GALVANISED	STEPPED TUBULAR
46101604	WESLEY STREET	Kirton in Lindsey Parish	493640.97	398582.33	1	7000	00195281	01/04/1980 00:00	1	3	LESS THAN 30MPH	BACK OF FOOTPATH	0	POST TOP	LIGHT GREY	RIGID COLUMN	URBIS	AXIA 2 S1	PETITJEAN	SHEET STEEL	5	PAINTED	NIDD
46101604	WESLEY STREET	Kirton in Lindsey Parish	493606.15	398560.99	2	7001	00195282	29/01/2019 00:00	1	3	LESS THAN 30MPH	BACK OF FOOTPATH	0	POST TOP	NOT APPLICABLE	RIGID COLUMN	URBIS	AXIA 2 S1	MALLATITE	TUBULAR STEEL	6	GALVANISED	TUBULAR
46101604	WESLEY STREET	Kirton in Lindsey Parish	493571.03	398565.71	3	7002	00195283	01/04/1980 00:00	1	3	LESS THAN 30MPH	BACK OF FOOTPATH	0	POST TOP	LIGHT GREY	RIGID COLUMN	URBIS	AXIA 2 S1	PETITJEAN	SHEET STEEL	5	PAINTED	NIDD
46101604	WESLEY STREET	Kirton in Lindsey Parish	493533.44	398545.63	4	7003	00195284	01/09/2018 00:00	1	3	LESS THAN 30MPH	ON POLE	500	SINGLE ARM	DARK GREY	POLE MOUNTED	URBIS	AXIA 2 S1	WOODEN PO	ALUMINIUM	5	PAINTED	PUDSEY DIAMOND
46101604	WESLEY STREET	Kirton in Lindsey Parish	493512.57	398520.37	5	7004	00195285	01/09/2018 00:00	1	3	LESS THAN 30MPH	ON POLE	500	SINGLE ARM	DARK GREY	POLE MOUNTED	URBIS	AXIA 2 S1	WOODEN PO	ALUMINIUM	5	PAINTED	PUDSEY DIAMOND
46101604	WESLEY STREET	Kirton in Lindsey Parish	493499.98	398489.6	6	7005	00195286	01/04/1980 00:00	1	3	LESS THAN 30MPH	BACK OF FOOTPATH	0	POST TOP	LIGHT GREY	RIGID COLUMN	URBIS	AXIA 2 S1	PETITJEAN	SHEET STEEL	5	PAINTED	NIDD
46101604	WESLEY STREET	Kirton in Lindsey Parish	493473.07	398473.4	7	7006	00195287	01/09/2018 00:00	1	3	LESS THAN 30MPH	ON POLE	500	SINGLE ARM	DARK GREY	POLE MOUNTED	URBIS	AXIA 2 S1	WOODEN PO	ALUMINIUM	5	PAINTED	PUDSEY DIAMOND
46101604	WESLEY STREET	Kirton in Lindsey Parish	493446.43	398466.54	8	7007	00195288	01/09/2018 00:00	1	3	LESS THAN 30MPH	ON POLE	500	SINGLE ARM	DARK GREY	POLE MOUNTED	URBIS	AXIA 2 S1	WOODEN PO	ALUMINIUM	5	PAINTED	PUDSEY DIAMOND
46101605	WEST ACRIDGE	Barton upon Humber Parish	502784.03	422211.19	1	7000	00195289	01/04/1995 00:00	5	2	LESS THAN 30MPH	BACK OF FOOTPATH	800	SINGLE ARM	MID GREY	RIGID COLUMN	URBIS	AXIA 2 S1	PETITJEAN	SHEET STEEL	6	PAINTED	DAER
46101605	WEST ACRIDGE	Barton upon Humber Parish	502546.2	422313.52	10	7009	00195298	01/04/2003 00:00	5	2	LESS THAN 30MPH	BACK OF FOOTPATH	0	POST TOP	NOT APPLICABLE	RIGID COLUMN	URBIS	AXIA 2 S1	MALLATITE	TUBULAR STEEL	6	GALVANISED	TUBULAR
46101605	WEST ACRIDGE	Barton upon Humber Parish	502520.3	422330.01	11	7010	00195299	01/04/2003 00:00	5	2	LESS THAN 30MPH	BACK OF FOOTPATH	0	POST TOP	NOT APPLICABLE	RIGID COLUMN	URBIS	AXIA 2 S1	MALLATITE	TUBULAR STEEL	6	GALVANISED	TUBULAR
46101605	WEST ACRIDGE	Barton upon Humber Parish	502490.46	422330.67	12	7011	00195300	01/04/2003 00:00	5	2	LESS THAN 30MPH	BACK OF FOOTPATH	0	POST TOP	NOT APPLICABLE	RIGID COLUMN	URBIS	AXIA 2 S1	MALLATITE	TUBULAR STEEL	6	GALVANISED	TUBULAR
46101605	WEST ACRIDGE	Barton upon Humber Parish	502464.1	422345.67	13	7012	00195301	01/04/2003 00:00	5	2	LESS THAN 30MPH	BACK OF FOOTPATH	0	POST TOP	NOT APPLICABLE	RIGID COLUMN	URBIS	AXIA 2 S1	MALLATITE	TUBULAR STEEL	6	GALVANISED	TUBULAR
46101605	WEST ACRIDGE	Barton upon Humber Parish	502442.91	422342.43	14	7013	00195302	01/04/2003 00:00	5	2	LESS THAN 30MPH	BACK OF FOOTPATH	0	POST TOP	NOT APPLICABLE	RIGID COLUMN	URBIS	AXIA 2 S1	MALLATITE	TUBULAR STEEL	6	GALVANISED	TUBULAR
46101605	WEST ACRIDGE	Barton upon Humber Parish	502415.56	422356.86	15	7014	00195303	01/04/2003 00:00	5	2	LESS THAN 30MPH	BACK OF FOOTPATH	0	POST TOP	NOT APPLICABLE	RIGID COLUMN	URBIS	AXIA 2 S1	MALLATITE	TUBULAR STEEL	6	GALVANISED	TUBULAR
46101605	WEST ACRIDGE	Barton upon Humber Parish	502385.44	422354.09	16	7015	00195304	01/04/1980 00:00	5	2	LESS THAN 30MPH	BACK OF FOOTPATH	300	SINGLE ARM	MID GREY	RIGID COLUMN	URBIS	AXIA 2 S1	PETITJEAN	SHEET STEEL	5	PAINTED	DAER
46101605	WEST ACRIDGE	Barton upon Humber Parish	502359	422369.54	17	7016	00195305	01/04/1980 00:00	5	2	LESS THAN 30MPH	BACK OF FOOTPATH	300	SINGLE ARM	MID GREY	RIGID COLUMN	URBIS	AXIA 2 S1	PETITJEAN	SHEET STEEL	5	PAINTED	DAER
46101605	WEST ACRIDGE	Barton upon Humber Parish	502326.53	422365.38	18	7017	00195306	01/04/2003 00:00	5	2	LESS THAN 30MPH	BACK OF FOOTPATH	0	POST TOP	NOT APPLICABLE	RIGID COLUMN	URBIS	AXIA 2 S1	MALLATITE	TUBULAR STEEL	6	NOT APPLICABI	TUBULAR
46101605	WEST ACRIDGE	Barton upon Humber Parish	502302.5	422358.29	19	7018	00195307	01/04/2003 00:00	5	2	LESS THAN 30MPH	BACK OF FOOTPATH	0	POST TOP	NOT APPLICABLE	RIGID COLUMN	URBIS	AXIA 2 S1	MALLATITE	TUBULAR STEEL	6	NOT APPLICABI	TUBULAR
46101605	WEST ACRIDGE	Barton upon Humber Parish	502274.99	422344.11	20	7019	00195308	01/04/2003 00:00	5	2	LESS THAN 30MPH	BACK OF FOOTPATH	0	POST TOP	NOT APPLICABLE	RIGID COLUMN	URBIS	AXIA 2 S1	MALLATITE	TUBULAR STEEL	6	NOT APPLICABI	TUBULAR
46101605	WEST ACRIDGE	Barton upon Humber Parish	502248.62	422357.01	21	7020	00195309	01/04/2003 00:00	5	2	LESS THAN 30MPH	BACK OF FOOTPATH	0	POST TOP	NOT APPLICABLE	RIGID COLUMN	URBIS	AXIA 2 S1	MALLATITE	TUBULAR STEEL	6	NOT APPLICABI	TUBULAR
46101605	WEST ACRIDGE	Barton upon Humber Parish	502221.08	422362.42	22	7021	00195310	01/04/2003 00:00	5	2	LESS THAN 30MPH	BACK OF FOOTPATH	0	POST TOP	NOT APPLICABLE	RIGID COLUMN	URBIS	AXIA 2 S1	MALLATITE	TUBULAR STEEL	6	NOT APPLICABI	TUBULAR
46101605	WEST ACRIDGE	Barton upon Humber Parish	502195	422367.87	23	7022	00195311	01/04/2003 00:00	5	2	LESS THAN 30MPH	BACK OF FOOTPATH	0	POST TOP	NOT APPLICABLE	RIGID COLUMN	URBIS	AXIA 2 S1	MALLATITE	TUBULAR STEEL	6	NOT APPLICABI	TUBULAR
46101605	WEST ACRIDGE	Barton upon Humber Parish	502178.32	422366.17	24	7023	00195312	01/04/1970 00:00	5	2	LESS THAN 30MPH	ON POLE	300	SINGLE ARM	NOT APPLICABLE	POLE MOUNTED	URBIS	AXIA 2 S1	WOODEN PO	WOOD	5	NOT APPLICABI	Not Applicable
46101605	WEST ACRIDGE	Barton upon Humber Parish	502757.59	422223.66	2FP	7001	00195290	01/04/1995 00:00	5	2	LESS THAN 30MPH	BACK OF FOOTPATH	800	SINGLE ARM	MID GREY	RIGID COLUMN	URBIS	AXIA 2 S1	PETITJEAN	SHEET STEEL	6	PAINTED	DAER
46101605	WEST ACRIDGE	Barton upon Humber Parish	502746.71	422238.09	3	7002	00195291	01/04/2003 00:00	5	2	LESS THAN 30MPH	BACK OF FOOTPATH	0	POST TOP	NOT APPLICABLE	RIGID COLUMN	URBIS	AXIA 2 S1	MALLATITE	TUBULAR STEEL	6	GALVANISED	TUBULAR
46101605	WEST ACRIDGE	Barton upon Humber Parish	502714.69	422243.29	4	7003	00195292	01/04/1980 00:00	5	2	LESS THAN 30MPH	BACK OF FOOTPATH	300	SINGLE ARM	NOT APPLICABLE	RIGID COLUMN	URBIS	AXIA 2 S1	PETITJEAN	SHEET STEEL	5	GALVANISED	DAER
46101605	WEST ACRIDGE	Barton upon Humber Parish	502694.3	422263.11	5	7004	00195293	01/04/1980 00:00	5	2	LESS THAN 30MPH	BACK OF FOOTPATH	300	SINGLE ARM	MID GREY	RIGID COLUMN	URBIS	AXIA 2 S1	PETITJEAN	SHEET STEEL	5	PAINTED	DAER
46101605	WEST ACRIDGE	Barton upon Humber Parish	502662.18	422269.42	6	7005	00195294	01/04/2003 00:00	5	2	LESS THAN 30MPH	BACK OF FOOTPATH	0	POST TOP	NOT APPLICABLE	RIGID COLUMN	URBIS	AXIA 2 S1	MALLATITE	TUBULAR STEEL	6	GALVANISED	TUBULAR
46101605	WEST ACRIDGE	Barton upon Humber Parish	502625.22	422285.86	7	7006	00195295	01/04/2003 00:00	5	2	LESS THAN 30MPH	BACK OF FOOTPATH	0	POST TOP	NOT APPLICABLE	RIGID COLUMN	URBIS	AXIA 2 S1	MALLATITE	TUBULAR STEEL	6	GALVANISED	TUBULAR
46101605	WEST ACRIDGE	Barton upon Humber Parish	502603.1	422294.73	8	7007	00195296	01/04/2003 00:00	5	2	LESS THAN 30MPH	BACK OF FOOTPATH	0	POST TOP	NOT APPLICABLE	RIGID COLUMN	URBIS	AXIA 2 S1	MALLATITE	TUBULAR STEEL	6	GALVANISED	TUBULAR
46101605	WEST ACRIDGE	Barton upon Humber Parish	502580.52	422311.82	9	7008	00195297	01/04/1980 00:00	5	2	LESS THAN 30MPH	BACK OF FOOTPATH	800	SINGLE ARM	MID GREY	RIGID COLUMN	URBIS	AXIA 2 S1	PETITJEAN	SHEET STEEL	5	PAINTED	DAER
46101606	WEST COMMON CRESCENT	Scunthorpe	488983.73	409545.35	1	7000	00195313	01/04/1980 00:00	5	4	LESS THAN 30MPH	BACK OF FOOTPATH	300	SINGLE ARM	NOT APPLICABLE	RIGID COLUMN	URBIS	AXIA 2 S1	PETITJEAN	SHEET STEEL	5	GALVANISED	DAER
46101606	WEST COMMON CRESCENT	Scunthorpe	488833.56	409719	10	7009	00195322	01/04/1980 00:00	5	4	LESS THAN 30MPH	BACK OF FOOTPATH	300	SINGLE ARM	NOT APPLICABLE	RIGID COLUMN	URBIS	AXIA 2 S1	PETITJEAN	SHEET STEEL	5	GALVANISED	DAER
46101606	WEST COMMON CRESCENT	Scunthorpe	488806.84	409723	11	7010	00195323	01/04/1980 00:00	5	4	LESS THAN 30MPH	BACK OF FOOTPATH	300	SINGLE ARM	NOT APPLICABLE	RIGID COLUMN	URBIS	AXIA 2 S1	PETITJEAN	SHEET STEEL	5	GALVANISED	DAER
46101606	WEST COMMON CRESCENT	Scunthorpe	488984.28	409572.72	2	7001	00195314	01/04/1980 00:00	5	4	LESS THAN 30MPH	BACK OF FOOTPATH	300	SINGLE ARM	NOT APPLICABLE	RIGID COLUMN	URBIS	AXIA 2 S1	PETITJEAN	SHEET STEEL	5	GALVANISED	DAER
46101606	WEST COMMON CRESCENT	Scunthorpe	488965.22	409592.07	3	7002	00195315	01/04/1980 00:00	5	4	LESS THAN 30MPH	BACK OF FOOTPATH	300	SINGLE ARM	NOT APPLICABLE	RIGID COLUMN	URBIS	AXIA 2 S1	PETITJEAN	SHEET STEEL	5	GALVANISED	DAER
46101606	WEST COMMON CRESCENT	Scunthorpe	488964.7	409617.73	4	7003	00195316	01/04/1980 00:00	5	4	LESS THAN 30MPH	BACK OF FOOTPATH	300	SINGLE ARM	NOT APPLICABLE	RIGID COLUMN	URBIS	AXIA 2 S1	PETITJEAN	SHEET STEEL	5	GALVANISED	DAER
46101606	WEST COMMON CRESCENT	Scunthorpe	488951.44	409639.84	5	7004	00195317	01/04/1980 00:00	5	4	LESS THAN 30MPH	BACK OF FOOTPATH	300	SINGLE ARM	NOT APPLICABLE	RIGID COLUMN	URBIS	AXIA 2 S1	PETITJEAN	SHEET STEEL	5	GALVANISED	DAER
46101606	WEST COMMON CRESCENT	Scunthorpe	488928.56	409666.44	6	7005	00195318	01/04/1980 00:00	5	4	LESS THAN 30MPH	BACK OF FOOTPATH	300	SINGLE ARM	NOT APPLICABLE	RIGID COLUMN	URBIS	AXIA 2 S1	PETITJEAN	SHEET STEEL	5	GALVANISED	DAER
46101606	WEST COMMON CRESCENT	Scunthorpe	488911.46	409681.02	7	7006	00195319	01/04/1980 00:00	5	4	LESS THAN 30MPH	BACK OF FOOTPATH	300	SINGLE ARM	NOT APPLICABLE	RIGID COLUMN	URBIS	AXIA 2 S1	PETITJEAN	SHEET STEEL	5	GALVANISED	DAER
46101606	WEST COMMON CRESCENT	Scunthorpe	488888.28	409697.44	8	7007	00195320	01/04/1980 00:00	5	4	LESS THAN 30MPH	BACK OF FOOTPATH	300	SINGLE ARM	NOT APPLICABLE	RIGID COLUMN	URBIS	AXIA 2 S1	PETITJEAN	SHEET STEEL	5	GALVANISED	DAER
46101606	WEST COMMON CRESCENT	Scunthorpe	488857.63	409711.68	9	7008	00195321	01/04/1980 00:00	5	4	LESS THAN 30MPH	BACK OF FOOTPATH	300	SINGLE ARM	NOT APPLICABLE	RIGID COLUMN	URBIS	AXIA 2 S1	PETITJEAN	SHEET STEEL	5	GALVANISED	DAER
46101609	WEST CROSS STREET	Kirton in Lindsey Parish	493582.42	398324.92	1	7000	00195324	01/04/1980 00:00	1	3	LESS THAN 30MPH	BACK OF FOOTPATH	0	POST TOP	LIGHT GREY	RIGID COLUMN	URBIS	AXIA 2 S1	PETITJEAN	SHEET STEEL	5	PAINTED	NIDD
46101609	WEST CROSS STREET	Kirton in Lindsey Parish	493574.99	398348.89	2	7001	00195325	08/10/2018 00:00	1	3	LESS THAN 30MPH	BACK OF FOOTPATH	0	POST TOP	NOT APPLICABLE	RIGID COLUMN	URBIS	AXIA 2 S1	MALLATITE	TUBULAR STEEL	6	GALVANISED	TUBULAR
46101609	WEST CROSS STREET	Kirton in Lindsey Parish	493567.71	398396.9	3	7002	00195326	01/04/1980 00:00	1	3	LESS THAN 30MPH	BACK OF FOOTPATH	300	SINGLE ARM	NOT APPLICABLE	RIGID COLUMN	URBIS	AXIA 2 S1	PETITJEAN	SHEET STEEL	5	GALVANISED	DAER
46101609	WEST CROSS STREET	Kirton in Lindsey Parish	493553.67	398429.77	4	7003	00195327	01/04/1980 00:00	1	3	LESS THAN 30MPH	BACK OF FOOTPATH	0	POST TOP	LIGHT GREY	RIGID COLUMN	URBIS	AXIA 2 S1	PETITJEAN	SHEET STEEL	5	PAINTED	NIDD
46101609	WEST CROSS STREET	Kirton in Lindsey Parish	493508.2	398456.44	5	7004	00195328	08/10/2018 00:00	1	3	LESS THAN 30MPH	BACK OF FOOTPATH	0	POST TOP	NOT APPLICABLE	RIGID COLUMN	URBIS	AXIA 2 S1	MALLATITE	TUBULAR STEEL	6	GALVANISED	TUBULAR
46101610	WESTDALE CRESCENT	Kirton in Lindsey Parish	493195.74	399114.43	1	7000	00195329	14/01/2019 00:00	1	3	LESS THAN 30MPH	BACK OF FOOTPATH	0	POST TOP	NOT APPLICABLE	RIGID COLUMN	URBIS	AXIA 2 S1	MALLATITE	TUBULAR STEEL	6	GALVANISED	TUBULAR
46101610	WESTDALE CRESCENT	Kirton in Lindsey Parish	493161.27	399130.25	2	7001	00195330	01/04/1996 00:00	1	3	LESS THAN 30MPH	BACK OF FOOTPATH	0	POST TOP	NOT APPLICABLE	RIGID COLUMN	URBIS	AXIA 2 S1	VALMONT ST	SH

46101626	WEST STREET	Scunthorpe	489518.04	411535.8	4	7003	00195487	22/05/2020 00:00	4	4	LESS THAN 30MPH	BACK OF FOOTPATH	1000	SINGLE ARM	NOT APPLICABLE	RIGID COLUMN	URBIS	AXIA 2 S1	MALLATITE	TUBULAR STEEL	8	GALVANISED	TUBULAR
46101626	WEST STREET	Scunthorpe	489498.15	411516.11	5	7004	00195488	01/04/1985 00:00	4	4	LESS THAN 30MPH	BACK OF FOOTPATH	1250	SINGLE ARM	LIGHT GREY	RIGID COLUMN	URBIS	AXIA 2 S1	PETITJEAN	SHEET STEEL	8	PAINTED	THAMES
46101626	WEST STREET	Scunthorpe	489470.36	411516.21	6	7005	00195489	22/05/2020 00:00	4	4	LESS THAN 30MPH	VERGE	1000	SINGLE ARM	NOT APPLICABLE	RIGID COLUMN	URBIS	AXIA 2 S1	MALLATITE	TUBULAR STEEL	8	GALVANISED	TUBULAR
46101626	WEST STREET	Scunthorpe	489445.25	411497.86	7FP	7006	00195490	01/04/1985 00:00	4	4	LESS THAN 30MPH	BACK OF FOOTPATH	1250	SINGLE ARM	LIGHT GREY	RIGID COLUMN	URBIS	AXIA 2 S1	PETITJEAN	SHEET STEEL	8	PAINTED	THAMES
46101626	WEST STREET	Scunthorpe	489415.47	411499.72	8	7007	00195491	01/04/1985 00:00	4	4	LESS THAN 30MPH	BACK OF FOOTPATH	1250	SINGLE ARM	LIGHT GREY	RIGID COLUMN	URBIS	AXIA 2 S1	PETITJEAN	SHEET STEEL	8	PAINTED	THAMES
46101626	WEST STREET	Scunthorpe	489390.32	411481.73	9	7008	00195492	01/04/1985 00:00	4	4	LESS THAN 30MPH	BACK OF FOOTPATH	1250	SINGLE ARM	LIGHT GREY	RIGID COLUMN	URBIS	AXIA 2 S1	PETITJEAN	SHEET STEEL	8	PAINTED	THAMES
46101627	WEST STREET	West Butterwick Parish	483509.6	405769.6	1	7000	00195502	01/04/1995 00:00	6	4	LESS THAN 30MPH	BACK OF FOOTPATH	300	SINGLE ARM	NOT APPLICABLE	RIGID COLUMN	URBIS	AXIA 2 S1	OTHER	TUBULAR STEEL	5	PAINTED	HOCKEY STICK
46101627	WEST STREET	West Butterwick Parish	483260.96	405842.1	10	7009	00195511	01/04/2009 00:00	6	4	BETWEEN 30-50 MPH	BACK OF FOOTPATH	0	POST TOP	NOT APPLICABLE	RIGID COLUMN	URBIS	AXIA 2 S1	MALLATITE	TUBULAR STEEL	6	GALVANISED	STEPPED TUBULAR
46101627	WEST STREET	West Butterwick Parish	483222.46	405837.76	11	7010	00195512	01/04/2009 00:00	6	4	BETWEEN 30-50 MPH	BACK OF FOOTPATH	0	POST TOP	NOT APPLICABLE	RIGID COLUMN	URBIS	AXIA 2 S1	MALLATITE	TUBULAR STEEL	6	GALVANISED	STEPPED TUBULAR
46101627	WEST STREET	West Butterwick Parish	483190.26	405827.68	12	7011	00195513	01/04/2009 00:00	6	4	BETWEEN 30-50 MPH	BACK OF FOOTPATH	0	POST TOP	NOT APPLICABLE	RIGID COLUMN	URBIS	AXIA 2 S1	MALLATITE	TUBULAR STEEL	6	GALVANISED	STEPPED TUBULAR
46101627	WEST STREET	West Butterwick Parish	483152.32	405816.62	13	7012	00195514	01/04/2009 00:00	6	4	BETWEEN 30-50 MPH	BACK OF FOOTPATH	0	POST TOP	NOT APPLICABLE	RIGID COLUMN	URBIS	AXIA 2 S1	MALLATITE	TUBULAR STEEL	6	GALVANISED	STEPPED TUBULAR
46101627	WEST STREET	West Butterwick Parish	483118.72	405826.56	14	7013	00195515	01/04/2009 00:00	6	4	BETWEEN 30-50 MPH	BACK OF FOOTPATH	0	POST TOP	NOT APPLICABLE	RIGID COLUMN	URBIS	AXIA 2 S1	MALLATITE	TUBULAR STEEL	6	GALVANISED	STEPPED TUBULAR
46101627	WEST STREET	West Butterwick Parish	483094.08	405813.26	15	7014	00195516	01/04/2009 00:00	6	4	BETWEEN 30-50 MPH	BACK OF FOOTPATH	0	POST TOP	NOT APPLICABLE	RIGID COLUMN	URBIS	AXIA 2 S1	MALLATITE	TUBULAR STEEL	6	GALVANISED	STEPPED TUBULAR
46101627	WEST STREET	West Butterwick Parish	483060.34	405817.74	16	7015	00195517	01/04/2009 00:00	6	4	BETWEEN 30-50 MPH	BACK OF FOOTPATH	0	POST TOP	NOT APPLICABLE	RIGID COLUMN	URBIS	AXIA 2 S1	MALLATITE	TUBULAR STEEL	6	GALVANISED	STEPPED TUBULAR
46101627	WEST STREET	West Butterwick Parish	483036.26	405805.42	17	7016	00195518	01/04/2009 00:00	6	4	BETWEEN 30-50 MPH	BACK OF FOOTPATH	0	POST TOP	NOT APPLICABLE	RIGID COLUMN	URBIS	AXIA 2 S1	MALLATITE	TUBULAR STEEL	6	GALVANISED	STEPPED TUBULAR
46101627	WEST STREET	West Butterwick Parish	483002.38	405808.08	18	7017	00195519	01/04/2009 00:00	6	4	BETWEEN 30-50 MPH	BACK OF FOOTPATH	0	POST TOP	NOT APPLICABLE	RIGID COLUMN	URBIS	AXIA 2 S1	MALLATITE	TUBULAR STEEL	6	GALVANISED	STEPPED TUBULAR
46101627	WEST STREET	West Butterwick Parish	482978.3	405793.66	19	7018	00195520	01/04/2009 00:00	6	4	BETWEEN 30-50 MPH	BACK OF FOOTPATH	0	POST TOP	NOT APPLICABLE	RIGID COLUMN	URBIS	AXIA 2 S1	MALLATITE	TUBULAR STEEL	6	GALVANISED	STEPPED TUBULAR
46101627	WEST STREET	West Butterwick Parish	483485.4	405778.7	2	7001	00195503	25/01/2017 00:00	6	4	LESS THAN 30MPH	BACK OF FOOTPATH	0	POST TOP	NOT APPLICABLE	RIGID COLUMN	URBIS	AXIA 2 S1	MALLATITE	TUBULAR STEEL	6	GALVANISED	TUBULAR
46101627	WEST STREET	West Butterwick Parish	482949.6	405803.74	20	7019	00195521	01/04/2009 00:00	6	4	BETWEEN 30-50 MPH	BACK OF FOOTPATH	0	POST TOP	NOT APPLICABLE	RIGID COLUMN	URBIS	AXIA 2 S1	MALLATITE	TUBULAR STEEL	6	GALVANISED	STEPPED TUBULAR
46101627	WEST STREET	West Butterwick Parish	482914.87	405797.11	21	7020	00195522	01/04/2005 00:00	6	4	LESS THAN 30MPH	VERGE	0	POST TOP	NOT APPLICABLE	RIGID COLUMN	URBIS	AXIA 2 S1	MALLATITE	TUBULAR STEEL	5	GALVANISED	STEPPED TUBULAR
46101627	WEST STREET	West Butterwick Parish	482886.99	405814.66	22	7021	00195523	01/04/2005 00:00	6	4	LESS THAN 30MPH	BACK OF FOOTPATH	0	POST TOP	NOT APPLICABLE	RIGID COLUMN	URBIS	AXIA 2 S1	MALLATITE	TUBULAR STEEL	5	GALVANISED	STEPPED TUBULAR
46101627	WEST STREET	West Butterwick Parish	482864.42	405808.28	23	7022	00195524	01/04/2005 00:00	6	4	LESS THAN 30MPH	VERGE	0	POST TOP	NOT APPLICABLE	RIGID COLUMN	URBIS	AXIA 2 S1	MALLATITE	TUBULAR STEEL	5	GALVANISED	STEPPED TUBULAR
46101627	WEST STREET	West Butterwick Parish	482827.46	405830.16	24	7023	00195525	01/04/2005 00:00	6	4	LESS THAN 30MPH	BACK OF FOOTPATH	0	POST TOP	NOT APPLICABLE	RIGID COLUMN	URBIS	AXIA 2 S1	MALLATITE	TUBULAR STEEL	5	GALVANISED	STEPPED TUBULAR
46101627	WEST STREET	West Butterwick Parish	482799.64	405839.4	25	7024	00195526	01/04/2005 00:00	6	4	LESS THAN 30MPH	BACK OF FOOTPATH	0	POST TOP	NOT APPLICABLE	RIGID COLUMN	URBIS	AXIA 2 S1	MALLATITE	TUBULAR STEEL	5	GALVANISED	STEPPED TUBULAR
46101627	WEST STREET	West Butterwick Parish	482762.15	405843.95	26	7025	00195527	01/04/2005 00:00	6	4	LESS THAN 30MPH	VERGE	0	POST TOP	NOT APPLICABLE	RIGID COLUMN	URBIS	AXIA 2 S1	MALLATITE	TUBULAR STEEL	5	GALVANISED	STEPPED TUBULAR
46101627	WEST STREET	West Butterwick Parish	482743.76	405861.83	27	7026	00195528	01/04/2005 00:00	6	4	LESS THAN 30MPH	BACK OF FOOTPATH	0	POST TOP	NOT APPLICABLE	RIGID COLUMN	URBIS	AXIA 2 S1	MALLATITE	TUBULAR STEEL	5	GALVANISED	STEPPED TUBULAR
46101627	WEST STREET	West Butterwick Parish	482708.14	405862.46	28	7027	00195529	01/04/2005 00:00	6	4	LESS THAN 30MPH	VERGE	0	POST TOP	NOT APPLICABLE	RIGID COLUMN	URBIS	AXIA 2 S1	MALLATITE	TUBULAR STEEL	5	GALVANISED	STEPPED TUBULAR
46101627	WEST STREET	West Butterwick Parish	482688.35	405880.29	29	7028	00195530	01/04/2005 00:00	6	4	LESS THAN 30MPH	BACK OF FOOTPATH	0	POST TOP	NOT APPLICABLE	RIGID COLUMN	URBIS	AXIA 2 S1	MALLATITE	TUBULAR STEEL	5	GALVANISED	STEPPED TUBULAR
46101627	WEST STREET	West Butterwick Parish	483450.4	405793.2	3	7002	00195504	01/04/1995 00:00	6	4	LESS THAN 30MPH	BACK OF FOOTPATH	300	SINGLE ARM	NOT APPLICABLE	WALL MOUNTED	URBIS	AXIA 2 S1	WALL MOUN	NOT APPLICABLE	5	NOT APPLICABI	Not Applicable
46101627	WEST STREET	West Butterwick Parish	482653.24	405879.21	30	7029	00195531	01/04/2005 00:00	6	4	LESS THAN 30MPH	VERGE	0	POST TOP	NOT APPLICABLE	RIGID COLUMN	URBIS	AXIA 2 S1	MALLATITE	TUBULAR STEEL	5	GALVANISED	STEPPED TUBULAR
46101627	WEST STREET	West Butterwick Parish	482624.51	405900.09	31	7030	00195532	01/04/2005 00:00	6	4	LESS THAN 30MPH	BACK OF FOOTPATH	0	POST TOP	NOT APPLICABLE	RIGID COLUMN	URBIS	AXIA 2 S1	MALLATITE	TUBULAR STEEL	5	GALVANISED	STEPPED TUBULAR
46101627	WEST STREET	West Butterwick Parish	482590.77	405908.92	32	7031	00195533	01/04/2005 00:00	6	4	LESS THAN 30MPH	BACK OF FOOTPATH	0	POST TOP	NOT APPLICABLE	RIGID COLUMN	URBIS	AXIA 2 S1	MALLATITE	TUBULAR STEEL	5	GALVANISED	STEPPED TUBULAR
46101627	WEST STREET	West Butterwick Parish	482561.44	405917.37	33	7032	00195534	01/04/2005 00:00	6	4	LESS THAN 30MPH	BACK OF FOOTPATH	0	POST TOP	NOT APPLICABLE	RIGID COLUMN	URBIS	AXIA 2 S1	MALLATITE	TUBULAR STEEL	5	GALVANISED	STEPPED TUBULAR
46101627	WEST STREET	West Butterwick Parish	482531.89	405925.96	34	7033	00195535	01/04/2005 00:00	6	4	GREATER THAN 50MPH	VERGE	0	POST TOP	NOT APPLICABLE	RIGID COLUMN	URBIS	AXIA 2 S1	MALLATITE	TUBULAR STEEL	5	GALVANISED	STEPPED TUBULAR
46101627	WEST STREET	West Butterwick Parish	482500.33	405934.48	35	7034	00195536	01/04/2005 00:00	6	4	GREATER THAN 50MPH	VERGE	0	POST TOP	NOT APPLICABLE	RIGID COLUMN	URBIS	AXIA 2 S1	MALLATITE	TUBULAR STEEL	5	GALVANISED	STEPPED TUBULAR
46101627	WEST STREET	West Butterwick Parish	482473.52	405942.56	36	7035	00195537	01/04/2005 00:00	6	4	GREATER THAN 50MPH	VERGE	0	POST TOP	NOT APPLICABLE	RIGID COLUMN	URBIS	AXIA 2 S1	MALLATITE	TUBULAR STEEL	5	GALVANISED	STEPPED TUBULAR
46101627	WEST STREET	West Butterwick Parish	482444.02	405950.87	37	7036	00195538	01/04/2005 00:00	6	4	GREATER THAN 50MPH	VERGE	0	POST TOP	NOT APPLICABLE	RIGID COLUMN	URBIS	AXIA 2 S1	MALLATITE	TUBULAR STEEL	5	GALVANISED	STEPPED TUBULAR
46101627	WEST STREET	West Butterwick Parish	482417.95	405957.99	38	7037	00195539	01/04/2005 00:00	6	4	GREATER THAN 50MPH	VERGE	0	POST TOP	NOT APPLICABLE	RIGID COLUMN	URBIS	AXIA 2 S1	MALLATITE	TUBULAR STEEL	5	GALVANISED	STEPPED TUBULAR
46101627	WEST STREET	West Butterwick Parish	482383.69	405966.56	39	7038	00195540	01/04/2005 00:00	6	4	GREATER THAN 50MPH	VERGE	0	POST TOP	NOT APPLICABLE	RIGID COLUMN	URBIS	AXIA 2 S1	MALLATITE	TUBULAR STEEL	5	GALVANISED	STEPPED TUBULAR
46101627	WEST STREET	West Butterwick Parish	483423.4	405821.8	4	7003	00195505	01/04/1980 00:00	6	4	LESS THAN 30MPH	BACK OF FOOTPATH	300	SINGLE ARM	NOT APPLICABLE	RIGID COLUMN	URBIS	AXIA 2 S1	OTHER	TUBULAR STEEL	5	PAINTED	HOCKEY STICK
46101627	WEST STREET	West Butterwick Parish	483413.97	405841.6	5	7004	00195506	01/04/1990 00:00	6	4	LESS THAN 30MPH	BACK OF FOOTPATH	0	POST TOP	NOT APPLICABLE	RIGID COLUMN	URBIS	AXIA 2 S1	PETITJEAN	SHEET STEEL	5	GALVANISED	NIDD
46101627	WEST STREET	West Butterwick Parish	483376.18	405838.88	6	7005	00195507	01/04/2009 00:00	6	4	BETWEEN 30-50 MPH	BACK OF FOOTPATH	0	POST TOP	NOT APPLICABLE	RIGID COLUMN	URBIS	AXIA 2 S1	MALLATITE	TUBULAR STEEL	6	GALVANISED	STEPPED TUBULAR
46101627	WEST STREET	West Butterwick Parish	483352.24	405850.78	7	7006	00195508	01/04/2009 00:00	6	4	BETWEEN 30-50 MPH	BACK OF FOOTPATH	0	POST TOP	NOT APPLICABLE	RIGID COLUMN	URBIS	AXIA 2 S1	MALLATITE	TUBULAR STEEL	6	GALVANISED	STEPPED TUBULAR
46101627	WEST STREET	West Butterwick Parish	483315.56	405841.12	8	7007	00195509	01/04/2009 00:00	6	4	BETWEEN 30-50 MPH	BACK OF FOOTPATH	0	POST TOP	NOT APPLICABLE	RIGID COLUMN	URBIS	AXIA 2 S1	MALLATITE	TUBULAR STEEL	6	GALVANISED	STEPPED TUBULAR
46101627	WEST STREET	West Butterwick Parish	483290.36	405853.58	9	7008	00195510	01/04/2009 00:00	6	4	BETWEEN 30-50 MPH	BACK OF FOOTPATH	0	POST TOP	NOT APPLICABLE	RIGID COLUMN	URBIS	AXIA 2 S1	MALLATITE	TUBULAR STEEL	6	GALVANISED	STEPPED TUBULAR
46101628	WEST STREET	West Halton Parish	490629.27	421015.23	1	7000	00195541	06/03/2019 00:00	1	3	LESS THAN 30MPH	BACK OF FOOTPATH	0	POST TOP	NOT APPLICABLE	RIGID COLUMN	URBIS	AXIA 2 S1	MALLATITE	TUBULAR STEEL	6	GALVANISED	TUBULAR
46101629	WEST STREET	Winterton Parish	493094.99	418566.82	1	7000	00195542	01/04/1977 00:00	1	1	LESS THAN 30MPH	ON POLE	300	SINGLE ARM	NOT APPLICABLE	POLE MOUNTED	URBIS	AXIA 2 S1	WOODEN PO	WOOD	6	NOT APPLICABI	Not Applicable
46101629	WEST STREET	Winterton Parish	492692.99	418643.24	10	7009	00195551	01/04/1978 00:00	1	1	LESS THAN 30MPH	BACK OF FOOTPATH	800	SINGLE ARM	MID GREY	RIGID COLUMN	URBIS	AXIA 2 S1	PETITJEAN	SHEET STEEL	6	PAINTED	DAER
46101629	WEST STREET	Winterton Parish	492642.94	418646.45	11	7010	00195552	01/04/1977 00:00	1	1	LESS THAN 30MPH	ON POLE	800	SINGLE ARM	NOT APPLICABLE	POLE MOUNTED	URBIS	AXIA 2 S1	WOODEN PO	WOOD	6	NOT APPLICABI	Not Applicable
46101629	WEST STREET	Winterton Parish	492610.83	418647.7	12	7011	00195553	01/04/1977 00:00	1	1	LESS THAN 30MPH	ON POLE	800	SINGLE ARM	NOT APPLICABLE	POLE MOUNTED	URBIS	AXIA 2 S1	WOODEN PO	WOOD	6	NOT APPLICABI	Not Applicable
46101629	WEST STREET	Winterton Parish	492547.62	418651.24	13	7012	00195554	01/04/1977 00:00	1	1	LESS THAN 30MPH	ON POLE	800	SINGLE ARM	NOT APPLICABLE	POLE MOUNTED	URBIS	AXIA 2 S1	WOODEN PO	WOOD	6	NOT APPLICABI	Not Applicable
46101629	WEST STREET	Winterton Parish	493053.16	418572.77	2	7001	00195543	01/04/1977 00:00	1	1	LESS THAN 30MPH	ON POLE	300	SINGLE ARM	NOT APPLICABLE	POLE MOUNTED	URBIS	AXIA 2 S1	WOODEN PO	WOOD	6	NOT APPLICABI	Not Applicable
46101629	WEST STREET	Winterton Parish	493012.92	418580.02	3	7002	00195544	01/04/1977 00:00	1	1	LESS THAN 30MPH	ON POLE	300	SINGLE ARM	NOT APPLICABLE	POLE MOUNTED	URBIS	AXIA 2 S1	WOODEN PO	WOOD	6	NOT APPLICABI	Not Applicable
46101629	WEST STREET	Winterton Parish	492954.13	418591.74	4	7003	00195545	01/04/1978 00:00	1	1	LESS THAN 30MPH	FRONT OF FOOTPATH	800	SINGLE ARM	MID GREY	RIGID COLUMN	URBIS	AXIA 2 S1	PETITJEAN	SHEET STEEL	6	PAINTED	DAER
46101629	WEST STREET	Winterton Parish	492917.54	418599.72	5	7004	00195546	01/04/1977 00:00	1	1	LESS THAN 30MPH	ON POLE	300	SINGLE ARM	NOT APPLICABLE	POLE MOUNTED	URBIS	AXIA 2 S1	WOODEN PO	WOOD	6	NOT APPLICABI	Not Applicable
46101629	WEST STREET	Winterton Parish	492865.57	418613.88	6	7005	00195547	01/04/1977 00:00	1	1	LESS THAN 30MPH	ON POLE	800	SINGLE ARM	NOT APPLICABLE	POLE MOUNTED	URBIS	AXIA 2 S1	WOODEN PO	WOOD	6	NOT APPLICABI	Not Applicable
46101629	WEST STREET	Winterton Parish	492818.58	418619.97	7	7006	00195548	01/04/2016 00:00	1	1	LESS THAN 30MPH	ON POLE	300	SINGLE ARM	NOT APPLICABLE	POLE MOUNTED	URBIS	AXIA 2 S1	WOODEN PO	WOOD	6	NOT APPLICABI	Not Applicable
46101629	WEST STREET	Winterton Parish	492783.19	418623.42	8	7007	00195549	01/04/1977 00:00	1	1	LESS THAN 30MPH	ON POLE	800	SINGLE ARM	NOT APPLICABLE	POLE MOUNTED	URBIS	AXIA 2 S1	WOODEN PO	WOOD	6	NOT APPLICABI	Not Applicable
46101629	WEST STREET	Winterton Parish	492735.28	418630.11	9	7008	00195550	01/04/1977 00:00	1	1	LESS THAN 30MPH	ON POLE	800	SINGLE ARM	NOT APPLICABLE	POLE MOUNTED	URBIS	AXIA 2 S1	WOODEN PO	WOOD	6	NOT APPLICABI	Not Applicable
46101630	WEST TERRACE	Brigg Parish	499654.49	407065	1	7000	00195555	21/11/2019 00:00	2	3	LESS THAN 30MPH	BACK OF FOOTPATH	0	POST TOP	NOT APPLICABLE	RIGID COLUMN	URBIS	AXIA 2 S1	MALLATITE	TUBULAR STEEL	6	GALVANISED	TUBULAR
46101630	WEST TERRACE	Brigg Parish	499662.84	407031.5	2	7001	00195556	21/11/2019 00:00	2	3	LESS THAN 30MPH	BACK OF FOOTPATH	0	POST TOP	NOT APPLICABLE	RIGID COLUMN	URBIS	AXIA 2 S1	MALLATITE	TUBULAR STEEL	6	GALVANISED	TUBULAR
46101631	WEST TERRACE STREET	Crowle Parish	477338.56	412879.15	1	7000	00195557	29/05/2018 00:00	5	1	LESS THAN 30MPH	BACK OF FOOTPATH	0	POST TOP	NOT APPLICABLE	RIGID COLUMN	URBIS	AXIA 2 S1	VALMONT ST	TUBULAR STEEL	6	GALVANISED	TUBULAR
46101632	WEST VIEW	Bottesford Parish	488288.03	407170.24	1	7000	00195558	01/04/2015 00:00	3	1	LESS THAN 30MPH	VERGE	0	POST TOP	NOT APPLICABLE	RIGID COLUMN	PHILIPS	STELA LONG 10 LED	MALLATITE	TUBULAR STEEL	6	GALVANISED	TUBULAR
46101632	WEST VIEW	Bottesford Parish	488251.44	407158.03	2	7001	00195559	22/03/2018 00:00	3	1	LESS THAN 30MPH	VERGE	0	POST TOP	NOT APPLICABLE	RIGID COLUMN	URBIS	AXIA 2 S1	VALMONT ST	TUBULAR STEEL	6	GALVANISED	TUBULAR
46101632	WEST VIEW	Bottesford Parish	488217	407162.5	3	7002	00195560	01/04/2015 00:00	3	1	LESS THAN 30MPH	BACK OF FOOTPATH	0	POST TOP	NOT APPLICABLE	RIGID COLUMN	PHILIPS	STELA LONG 10 LED	MALLATITE	TUBULAR STEEL	6	GALVANISED	TUBULAR
46101632	WEST VIEW	Bottesford Parish	488188.9	407155.4	4	7003	00195561	01/04/2015 00:00	3	1	LESS THAN 30MPH	BACK OF FOOTPATH	0	POST TOP	NOT APPLICABLE	RIGID COLUMN	PHILIPS	STELA LONG 10 LED	MALLATITE	TUBULAR STEEL	6	GALVANISED	TUBULAR
46101633	WEST VIEW	Messingham Parish	488985.91	404253.8	1	7000	00195562	01/04/2009 00:00	4	1	LESS THAN 30MPH	VERGE	0	POST TOP	NOT APPLICABLE	RIGID COLUMN	URBIS	AXIA 2 S1	BRITISH STEE	TUBULAR STEEL	6	GALVANISED	ASH
46101633	WEST VIEW	Messingham Parish	488967.49	404287.07	2	7001	00195563	01/04/2008 00:00	4	1	LESS THAN 30MPH	VERGE	0	POST TOP	NOT APPLICABLE	RIGID COLUMN	URBIS	AXIA 2 S1	BRITISH STEE	TUBULAR STEEL	6	GALVANISED	ASH
46101633	WEST VIEW	Messingham Parish	488956.85	404319.6	3	7002	00195564	01/04/2009 00:00	4	1	LESS THAN 30MPH	VERGE	0	POST TOP	NOT APPLICABLE	RIGID COLUMN	URBIS	AXIA 2 S1	BRITISH STEE	TUBULAR STEEL	6	GALVANISED	ASH
46101633	WEST VIEW	Messingham Parish	488948.72	404362.69	4	7003	00195565	01/04/2009 09:00	4	1	LESS THAN 30MPH	VERGE	0	POST TOP	NOT APPLICABLE	RIGID COLUMN	URBIS	AXIA 2 S1	BRITISH STEE	TUBULAR STEEL	6	GALVANISED	ASH
46101633	WEST VIEW	Messingham Parish	488949.77	404394.82	5	7004	00195566	01/04/2009 00:00	4	1	LESS THAN 30MPH	VERGE	0	POST TOP	NOT APPLICABLE	RIGID COLUMN	URBIS	AXIA 2 S1	BRITISH STEE	TUBULAR STEEL	6	GALVANISED	ASH
46101633	WEST VIEW	Messingham Parish	488963.14	404437.57	6	7005	00195567	10/04/2019 00:00	4	1	LESS THAN 30MPH	VERGE	0	POST TOP	NOT APPLICABLE	RIGID COLUMN	URBIS	AXIA 2 S1	MALLATITE	TUBULAR STEEL	6	GALVANISED	TUBULAR
46101634	WESTBOURNE DRIVE	Crowle Parish	477656.54	412208.81	1	7000	00195568	18/04/2019 00:00	5	1	LESS THAN 30MPH	VERGE	0	POST TOP	NOT APPLICABLE	RIGID COLUMN	URBIS	AXIA 2 S1	MALLATITE	TUBULAR STEEL	6	GALVANISED	TUBULAR
46101634	WESTBOURNE DRIVE	Crowle Parish	477444.85	412193.06	10	7009	00195577	01/04/1990 00:00	5	1	LESS THAN 30MPH	BACK OF FOOTPATH	0	POST TOP	NOT APPLICABLE	RIGID COLUMN	URBIS	AXIA 2 S1	PETITJEAN	SHEET STEEL	5	GALVANISED	NIDD
46101634	WESTBOURNE DRIVE	Crowle Parish	477428.13	412217.89	11	7010	00195578	01/04/1990 00:00	5	1	LESS THAN 30MPH	BACK OF FOOTPATH	0	POST TOP	NOT APPLICABLE	RIGID COLUMN	URBIS	AXIA 2 S1	PETITJEAN	SHEET STEEL	5	GALVANISED	NIDD
46101634	WESTBOURNE DRIVE	Crowle Parish	477415.19	412238.28	12	7011	00195579	01/04/1990 00:00	5	1	LESS THAN 30MPH	BACK OF FOOTPATH	0	POST TOP	NOT APPLICABLE	RIGID COLUMN	URBIS	AXIA 2 S1	PETITJEAN	SHEET STEEL	5	GALVANISED	NIDD
46101634	WESTBOURNE DRIVE	Crowle Parish	477626.31	412201.76	2	7001	00195569	18/04/2019 00:00	5	1	LESS THAN 30MPH	VERGE	0	POST TOP	NOT APPLICABLE	RIGID COLUMN	URBIS	AXIA 2 S1	MALLATITE	TUBULAR STEEL	6	GALVANISED	TUBULAR
46101634	WESTBOURNE DRIVE	Crowle Parish	477605.08	412178.91	3	7002	00195570	18/04/2019 00:00	5	1	LESS THAN 30MPH	VERGE	0	POST TOP	NOT APPLICABLE	RIGID COLUMN	URBIS	AXIA 2 S1	MALLATITE	TUBULAR STEEL	6	GALVANISED	TUBULAR
46101634	WESTBOURNE DRIVE	Crowle Parish	477573.09	412169.24	4	7003	00195571	18/04/2019 00:00	5	1	LESS THAN 30MPH	VERGE	0	POST TOP	NOT APPLICABLE	RIGID COLUMN	URBIS	AXIA 2 S1	MALLATITE	TUBULAR STEEL	6	GALVANISED	TUBULAR
46101634	WESTBOURNE DRIVE	Crowle Parish	477553.73	412147.73	5	7004	00195572	18/04/2019 00:00	5	1	LESS THAN 30MPH	VERGE	0	POST TOP	NOT APPLICABLE	RIGID COLUMN	URBIS	AXIA 2 S1	MALLATITE	TUBULAR STEEL	6	GALVANISED	TUBULAR
46101634	WESTBOURNE DRIVE	Crowle Parish	477531.13	412132.52	6	7005	00195573	01/04/2000 00:00	5	1	LESS THAN 30MPH	VERGE	0	POST TOP	NOT APPLICABLE	MID HINGED	URBIS	AXIA 2 S1	PETITJEAN	SHEET STEEL	5	GALVANISED	LEVEN
46101634	WESTBOURNE DRIVE	Crowle Parish	477501.54	412122.73	7	7006	00195574	01/04/1980 00:00	5	1	LESS THAN 30MPH	BACK OF FOOTPATH	0	POST TOP	NOT APPLICABLE	RIGID COLUMN	URBIS	AXIA 2 S1	PETITJEAN	SHEET STEEL	5	GALVANISED	NIDD
46101634	WESTBOURNE DRIVE	Crowle Parish	477477.73	412145.13	8	7007	00195575	01/04/2000 00:00	5	1	LESS THAN 30MPH	BACK OF FOOTPATH	0	POST TOP	NOT APPLICABLE	MID HINGED	URBIS	AXIA 2 S1	PETITJEAN	SHEET STEEL	5	GALVANISED	LEVEN
46101634	WESTBOURNE DRIVE	Crowle Parish	477462.75	412166.38	9	7008	00195576	01/04/1990 00:00	5	1	LESS THAN 30MPH	BACK OF FOOTPATH	0	POST TOP	NOT APPLICABLE	RIGID COLUMN	URBIS	AXIA 2 S1	PETITJEAN	SHEET STEEL	5	GALVANISED	NIDD
46101635	WESTBURN AVENUE	New Holland Parish	508329.04	423770.89	1	7000	00195581	25/02/2021 00:00	4	1	LESS THAN 30MPH	BACK OF FOOTPATH	0	POST TOP	NOT APPLICABLE	RIGID COLUMN	URBIS	AXIA 2 S1	MALLATITE	TUBULAR STEEL	6	GALVANISED	TUBULAR
46101635	WESTBURN AVENUE	New Holland Parish	508294.27	423775.48	2	7001	00195582	25/02/2021 00:00	4	1	LESS THAN 30MPH	BACK OF FOOTPATH	0	POST TOP	NOT APPLICABLE	RIGID COLUMN	URBIS	AXIA 2 S1	MALLATITE	TUBULAR STEEL	6	GALVANISED	TUBULAR
46101635	WESTBURN AVENUE	New Holland Parish	508269.66	423763.65	3	7002	00195583	25/02/2021 00:00	4	1	LESS THAN 30MPH	BACK OF FOOTPATH	0	POST TOP	NOT APPLICABLE	RIGID COLUMN	URBIS	AXIA 2 S1	MALLATITE	TUBULAR STEEL	6	GALVANISED	TUBULAR
46101635	WESTBURN AVENUE	New Holland Parish	508276.15	423703	4	7003	00195584

46101658	WHITECROSS STREET	Barton upon Humber Parish	503248.78	421659.63	1	7000	00195747	01/04/2005 00:00	5	2	LESS THAN 30MPH	BACK OF FOOTPATH	800	SINGLE ARM	BLACK	RIGID COLUMN	METCRAFT	WINSTON 3	METCRAFT	TUBULAR STEEL	8	PAINTED	TUBULAR	
46101658	WHITECROSS STREET	Barton upon Humber Parish	503330.04	421832.57	10	7009	00195756	01/04/1994 00:00	5	2	LESS THAN 30MPH	BACK OF FOOTPATH	800	SINGLE ARM	BLACK	RIGID COLUMN	URBIS	AXIA 2 S1	FABRIKAT	SHEET STEEL	8	PAINTED	8M03B	
46101658	WHITECROSS STREET	Barton upon Humber Parish	503335.35	421857.51	11	7010	00195757	01/04/1994 00:00	5	2	LESS THAN 30MPH	BACK OF FOOTPATH	800	SINGLE ARM	BLACK	RIGID COLUMN	URBIS	AXIA 2 S1	FABRIKAT	SHEET STEEL	8	PAINTED	8M03B	
46101658	WHITECROSS STREET	Barton upon Humber Parish	503336.63	421877.1	12	7011	00195758	01/04/1994 00:00	5	2	LESS THAN 30MPH	BACK OF FOOTPATH	800	SINGLE ARM	BLACK	RIGID COLUMN	URBIS	AXIA 2 S1	FABRIKAT	SHEET STEEL	8	PAINTED	8M03B	
46101658	WHITECROSS STREET	Barton upon Humber Parish	503336.38	421908.32	13	7012	00195759	01/04/1994 00:00	5	2	LESS THAN 30MPH	BACK OF FOOTPATH	800	SINGLE ARM	BLACK	RIGID COLUMN	URBIS	AXIA 2 S1	FABRIKAT	SHEET STEEL	8	PAINTED	8M03B	
46101658	WHITECROSS STREET	Barton upon Humber Parish	503354.46	421920.31	14	7013	00195760	01/04/1994 00:00	5	2	LESS THAN 30MPH	BACK OF FOOTPATH	800	SINGLE ARM	BLACK	RIGID COLUMN	URBIS	AXIA 2 S1	FABRIKAT	SHEET STEEL	8	PAINTED	8M03B	
46101658	WHITECROSS STREET	Barton upon Humber Parish	503354.97	421943.22	15FP	7014	00195761	01/04/1994 00:00	5	2	LESS THAN 30MPH	FRONT OF FOOTPATH	800	SINGLE ARM	BLACK	RIGID COLUMN	URBIS	AXIA 2 S1	FABRIKAT	SHEET STEEL	8	PAINTED	8M03B	
46101658	WHITECROSS STREET	Barton upon Humber Parish	503250.86	421675.01	2	7001	00195748	01/04/2005 00:00	5	2	LESS THAN 30MPH	BACK OF FOOTPATH	800	SINGLE ARM	BLACK	RIGID COLUMN	METCRAFT	WINSTON 3	METCRAFT	TUBULAR STEEL	8	PAINTED	TUBULAR	
46101658	WHITECROSS STREET	Barton upon Humber Parish	503268.81	421700.35	3	7002	00195749	01/04/2005 00:00	5	2	LESS THAN 30MPH	VERGE	800	SINGLE ARM	BLACK	RIGID COLUMN	METCRAFT	WINSTON 3	METCRAFT	TUBULAR STEEL	8	PAINTED	TUBULAR	
46101658	WHITECROSS STREET	Barton upon Humber Parish	503286.85	421723.35	4	7003	00195750	01/04/2005 00:00	5	2	LESS THAN 30MPH	BACK OF FOOTPATH	800	SINGLE ARM	BLACK	RIGID COLUMN	METCRAFT	WINSTON 3	METCRAFT	TUBULAR STEEL	8	PAINTED	TUBULAR	
46101658	WHITECROSS STREET	Barton upon Humber Parish	503298.85	421754.94	5	7004	00195751	01/04/2005 00:00	5	2	LESS THAN 30MPH	VERGE	800	SINGLE ARM	BLACK	RIGID COLUMN	METCRAFT	WINSTON 3	METCRAFT	TUBULAR STEEL	8	PAINTED	TUBULAR	
46101658	WHITECROSS STREET	Barton upon Humber Parish	503316.91	421787.8	6	7005	00195752	01/04/1994 00:00	5	2	LESS THAN 30MPH	BACK OF FOOTPATH	1250	SINGLE ARM	BLACK	RIGID COLUMN	URBIS	AXIA 2 S1	FABRIKAT	SHEET STEEL	8	PAINTED	8M03B	
46101658	WHITECROSS STREET	Barton upon Humber Parish	503297.05	421794.07	7	7006	00195753	01/04/1994 00:00	5	2	LESS THAN 30MPH	BACK OF FOOTPATH	1250	SINGLE ARM	BLACK	RIGID COLUMN	URBIS	AXIA 2 S1	FABRIKAT	SHEET STEEL	8	PAINTED	8M03B	
46101658	WHITECROSS STREET	Barton upon Humber Parish	503324.74	421814.21	8	7007	00195754	01/04/1994 00:00	5	2	LESS THAN 30MPH	BACK OF FOOTPATH	800	SINGLE ARM	BLACK	RIGID COLUMN	URBIS	AXIA 2 S1	FABRIKAT	SHEET STEEL	8	PAINTED	8M03B	
46101658	WHITECROSS STREET	Barton upon Humber Parish	503307.87	421820.25	9	7008	00195755	01/04/1994 00:00	5	2	LESS THAN 30MPH	BACK OF FOOTPATH	800	SINGLE ARM	BLACK	RIGID COLUMN	URBIS	AXIA 2 S1	FABRIKAT	SHEET STEEL	8	PAINTED	8M03B	
46101659	WHITESTONE ROAD	Scunthorpe	487741.72	408468.4	1	7000	00195762	01/04/2017 00:00	5	2	LESS THAN 30MPH	BACK OF FOOTPATH	0	POST TOP	NOT APPLICABLE	RIGID COLUMN	URBIS	AXIA 2 S1	VALMONT ST	TUBULAR STEEL	6	GALVANISED	TUBULAR	
46101659	WHITESTONE ROAD	Scunthorpe	487464.51	408443.45	10	7009	00195771	21/04/2022 00:00	5	2	LESS THAN 30MPH	VERGE	0	POST TOP	NOT APPLICABLE	RIGID COLUMN	URBIS	AXIA 2 S1	MALLATITE	TUBULAR STEEL	6	GALVANISED	TUBULAR	
46101659	WHITESTONE ROAD	Scunthorpe	487430.95	408442.51	11	7010	00195772	01/04/2010 00:00	5	2	LESS THAN 30MPH	VERGE	0	POST TOP	NOT APPLICABLE	RIGID COLUMN	URBIS	AXIA 2 S1	MALLATITE	TUBULAR STEEL	6	GALVANISED	TUBULAR	
46101659	WHITESTONE ROAD	Scunthorpe	487394.41	408445.26	12	7011	00195773	01/04/1980 00:00	5	2	LESS THAN 30MPH	VERGE	300	SINGLE ARM	NOT APPLICABLE	RIGID COLUMN	URBIS	AXIA 2 S1	PETITJEAN	SHEET STEEL	5	GALVANISED	DAER	
46101659	WHITESTONE ROAD	Scunthorpe	487387.46	408470.6	13	7012	00195774	01/04/2010 00:00	5	2	LESS THAN 30MPH	VERGE	0	POST TOP	NOT APPLICABLE	RIGID COLUMN	URBIS	AXIA 2 S1	MALLATITE	TUBULAR STEEL	6	GALVANISED	TUBULAR	
46101659	WHITESTONE ROAD	Scunthorpe	487394.28	408504.37	14	7013	00195775	09/10/2020 00:00	5	2	LESS THAN 30MPH	BACK OF FOOTPATH	0	POST TOP	NOT APPLICABLE	RIGID COLUMN	URBIS	AXIA 2 S1	MALLATITE	TUBULAR STEEL	6	GALVANISED	TUBULAR	
46101659	WHITESTONE ROAD	Scunthorpe	487385.95	408535.34	15	7014	00195776	09/10/2020 00:00	5	2	LESS THAN 30MPH	BACK OF FOOTPATH	0	POST TOP	NOT APPLICABLE	RIGID COLUMN	URBIS	AXIA 2 S1	MALLATITE	TUBULAR STEEL	6	GALVANISED	TUBULAR	
46101659	WHITESTONE ROAD	Scunthorpe	487393.06	408572.13	16	7015	00195777	01/04/2013 00:00	5	2	LESS THAN 30MPH	BACK OF FOOTPATH	0	POST TOP	NOT APPLICABLE	RIGID COLUMN	URBIS	AXIA 2 S1	MALLATITE	TUBULAR STEEL	6	GALVANISED	TUBULAR	
46101659	WHITESTONE ROAD	Scunthorpe	487384.93	408603.33	17	7016	00195778	09/10/2020 00:00	5	2	LESS THAN 30MPH	BACK OF FOOTPATH	0	POST TOP	NOT APPLICABLE	RIGID COLUMN	URBIS	AXIA 2 S1	MALLATITE	TUBULAR STEEL	6	GALVANISED	TUBULAR	
46101659	WHITESTONE ROAD	Scunthorpe	487391.32	408635.66	18	7017	00195779	09/10/2020 00:00	5	2	LESS THAN 30MPH	BACK OF FOOTPATH	0	POST TOP	NOT APPLICABLE	RIGID COLUMN	URBIS	AXIA 2 S1	MALLATITE	TUBULAR STEEL	6	GALVANISED	TUBULAR	
46101659	WHITESTONE ROAD	Scunthorpe	487383.25	408671.19	19	7018	00195780	01/04/1980 00:00	5	2	LESS THAN 30MPH	VERGE	300	SINGLE ARM	NOT APPLICABLE	RIGID COLUMN	URBIS	AXIA 2 S1	PETITJEAN	SHEET STEEL	5	GALVANISED	DAER	
46101659	WHITESTONE ROAD	Scunthorpe	487700.3	408468.03	2	7001	00195763	01/04/2010 00:00	5	2	LESS THAN 30MPH	BACK OF FOOTPATH	0	POST TOP	NOT APPLICABLE	RIGID COLUMN	URBIS	AXIA 2 S1	MALLATITE	TUBULAR STEEL	6	GALVANISED	TUBULAR	
46101659	WHITESTONE ROAD	Scunthorpe	487392.72	408701.69	20	7019	00195781	09/10/2020 00:00	5	2	LESS THAN 30MPH	BACK OF FOOTPATH	0	POST TOP	NOT APPLICABLE	RIGID COLUMN	URBIS	AXIA 2 S1	MALLATITE	TUBULAR STEEL	6	GALVANISED	TUBULAR	
46101659	WHITESTONE ROAD	Scunthorpe	487431.8	408694.65	21	7020	00195782	09/10/2020 00:00	5	2	LESS THAN 30MPH	BACK OF FOOTPATH	0	POST TOP	NOT APPLICABLE	RIGID COLUMN	URBIS	AXIA 2 S1	MALLATITE	TUBULAR STEEL	6	GALVANISED	TUBULAR	
46101659	WHITESTONE ROAD	Scunthorpe	487678.27	408457.41	3	7002	00195764	09/10/2020 00:00	5	2	LESS THAN 30MPH	BACK OF FOOTPATH	0	POST TOP	NOT APPLICABLE	RIGID COLUMN	URBIS	AXIA 2 S1	MALLATITE	TUBULAR STEEL	6	GALVANISED	TUBULAR	
46101659	WHITESTONE ROAD	Scunthorpe	487644.88	408460.2	4	7003	00195765	09/10/2020 00:00	5	2	LESS THAN 30MPH	BACK OF FOOTPATH	0	POST TOP	NOT APPLICABLE	RIGID COLUMN	URBIS	AXIA 2 S1	MALLATITE	TUBULAR STEEL	6	GALVANISED	TUBULAR	
46101659	WHITESTONE ROAD	Scunthorpe	487610.67	408449.03	5	7004	00195766	09/10/2020 00:00	5	2	LESS THAN 30MPH	BACK OF FOOTPATH	0	POST TOP	NOT APPLICABLE	RIGID COLUMN	URBIS	AXIA 2 S1	MALLATITE	TUBULAR STEEL	6	GALVANISED	TUBULAR	
46101659	WHITESTONE ROAD	Scunthorpe	487580.95	408446.46	6	7005	00195767	09/10/2020 00:00	5	2	LESS THAN 30MPH	BACK OF FOOTPATH	0	POST TOP	NOT APPLICABLE	RIGID COLUMN	URBIS	AXIA 2 S1	MALLATITE	TUBULAR STEEL	6	GALVANISED	TUBULAR	
46101659	WHITESTONE ROAD	Scunthorpe	487551.15	408451.29	7	7006	00195768	01/04/2013 00:00	5	2	LESS THAN 30MPH	BACK OF FOOTPATH	0	POST TOP	NOT APPLICABLE	RIGID COLUMN	URBIS	AXIA 2 S1	MALLATITE	TUBULAR STEEL	6	GALVANISED	TUBULAR	
46101659	WHITESTONE ROAD	Scunthorpe	487535.03	408444.13	8	7007	00195769	01/04/2010 00:00	5	2	LESS THAN 30MPH	VERGE	0	POST TOP	NOT APPLICABLE	RIGID COLUMN	URBIS	AXIA 2 S1	MALLATITE	TUBULAR STEEL	6	GALVANISED	TUBULAR	
46101659	WHITESTONE ROAD	Scunthorpe	487499.04	408451.25	9	7008	00195770	01/04/2010 00:00	5	2	LESS THAN 30MPH	VERGE	0	POST TOP	NOT APPLICABLE	RIGID COLUMN	URBIS	AXIA 2 S1	MALLATITE	TUBULAR STEEL	6	GALVANISED	TUBULAR	
46101660	WHITEWELL CLOSE	Kirton in Lindsey Parish	493327.49	398844.3	1	7000	00195783	01/04/1983 00:00	1	3	LESS THAN 30MPH	FRONT OF FOOTPATH	0	POST TOP	LIGHT GREY	RIGID COLUMN	URBIS	AXIA 2 S1	PETITJEAN	SHEET STEEL	5	PAINTED	NIDD	
46101660	WHITEWELL CLOSE	Kirton in Lindsey Parish	493311.31	398842.25	2	7001	00195784	01/04/1983 00:00	1	3	LESS THAN 30MPH	VERGE	0	POST TOP	LIGHT GREY	RIGID COLUMN	URBIS	AXIA 2 S1	PETITJEAN	SHEET STEEL	5	PAINTED	NIDD	
46101660	WHITEWELL CLOSE	Kirton in Lindsey Parish	493293.24	398843.23	3	7002	00195785	01/04/1983 00:00	1	3	LESS THAN 30MPH	VERGE	0	POST TOP	LIGHT GREY	RIGID COLUMN	URBIS	AXIA 2 S1	PETITJEAN	SHEET STEEL	5	PAINTED	NIDD	
46101660	WHITEWELL CLOSE	Kirton in Lindsey Parish	493269.73	398853.98	4	7003	00195786	01/04/1983 00:00	1	3	NOT ON A ROAD	VERGE	0	POST TOP	LIGHT GREY	RIGID COLUMN	URBIS	AXIA 2 S1	PETITJEAN	SHEET STEEL	5	PAINTED	NIDD	
46101661	WHITFIELD ROAD	Scunthorpe	487669.91	408483.84	1	7000	00195787	04/09/2020 00:00	5	2	LESS THAN 30MPH	BACK OF FOOTPATH	0	POST TOP	NOT APPLICABLE	RIGID COLUMN	URBIS	AXIA 2 S1	MALLATITE	TUBULAR STEEL	6	GALVANISED	TUBULAR	
46101661	WHITFIELD ROAD	Scunthorpe	487660.98	408516.27	2	7001	00195788	04/09/2020 00:00	5	2	LESS THAN 30MPH	BACK OF FOOTPATH	0	POST TOP	NOT APPLICABLE	RIGID COLUMN	URBIS	AXIA 2 S1	MALLATITE	TUBULAR STEEL	6	GALVANISED	TUBULAR	
46101661	WHITFIELD ROAD	Scunthorpe	487659.52	408552.49	3	7002	00195789	04/09/2020 00:00	5	2	LESS THAN 30MPH	VERGE	0	POST TOP	NOT APPLICABLE	RIGID COLUMN	URBIS	AXIA 2 S1	MALLATITE	TUBULAR STEEL	6	GALVANISED	TUBULAR	
46101661	WHITFIELD ROAD	Scunthorpe	487649.42	408588.62	4	7003	00195790	04/09/2020 00:00	5	2	LESS THAN 30MPH	BACK OF FOOTPATH	0	POST TOP	NOT APPLICABLE	RIGID COLUMN	URBIS	AXIA 2 S1	MALLATITE	TUBULAR STEEL	6	GALVANISED	TUBULAR	
46101661	WHITFIELD ROAD	Scunthorpe	487656.92	408617.94	5	7004	00195791	04/09/2020 00:00	5	2	LESS THAN 30MPH	VERGE	0	POST TOP	NOT APPLICABLE	RIGID COLUMN	URBIS	AXIA 2 S1	MALLATITE	TUBULAR STEEL	6	GALVANISED	TUBULAR	
46101661	WHITFIELD ROAD	Scunthorpe	487648.53	408652.7	6	7005	00195792	04/09/2020 00:00	5	2	LESS THAN 30MPH	BACK OF FOOTPATH	0	POST TOP	NOT APPLICABLE	RIGID COLUMN	URBIS	AXIA 2 S1	MALLATITE	TUBULAR STEEL	6	GALVANISED	TUBULAR	
46101661	WHITFIELD ROAD	Scunthorpe	487648.88	408685.42	7	7006	00195793	01/04/2010 00:00	5	2	LESS THAN 30MPH	VERGE	0	POST TOP	NOT APPLICABLE	RIGID COLUMN	URBIS	AXIA 2 S1	VALMONT ST	TUBULAR STEEL	6	GALVANISED	TUBULAR	
46101661	WHITFIELD ROAD	Scunthorpe	487636.51	408717.27	8	7007	00195794	04/09/2020 00:00	5	2	LESS THAN 30MPH	BACK OF FOOTPATH	0	POST TOP	NOT APPLICABLE	RIGID COLUMN	URBIS	AXIA 2 S1	MALLATITE	TUBULAR STEEL	6	GALVANISED	TUBULAR	
46101661	WHITFIELD ROAD	Scunthorpe	487642.62	408750.63	9	7008	00195795	01/04/1993 00:00	5	2	LESS THAN 30MPH	FRONT OF FOOTPATH	500	SINGLE ARM	NOT APPLICABLE	RIGID COLUMN	URBIS	AXIA 2 S1	PETITJEAN	SHEET STEEL	6	GALVANISED	DAER	
46101662	WHITMAN ROAD	Scunthorpe	487439.16	409076.59	1	7000	00195796	01/04/2010 00:00	5	2	BETWEEN 30-50 MPH	BACK OF FOOTPATH	0	POST TOP	NOT APPLICABLE	RIGID COLUMN	URBIS	AXIA 2 S1	MALLATITE	TUBULAR STEEL	6	GALVANISED	STEPPED TUBULAR	
46101662	WHITMAN ROAD	Scunthorpe	487426.24	408823.19	10	7009	00195805	01/04/2010 00:00	5	2	BETWEEN 30-50 MPH	BACK OF FOOTPATH	0	POST TOP	NOT APPLICABLE	RIGID COLUMN	URBIS	AXIA 2 S1	MALLATITE	TUBULAR STEEL	6	GALVANISED	STEPPED TUBULAR	
46101662	WHITMAN ROAD	Scunthorpe	487427	408793.02	11	7010	00195806	01/04/2007 00:00	5	2	LESS THAN 30MPH	BACK OF FOOTPATH	0	POST TOP	NOT APPLICABLE	RIGID COLUMN	URBIS	AXIA 2 S1	VALMONT ST	TUBULAR STEEL	6	GALVANISED	TUBULAR	
46101662	WHITMAN ROAD	Scunthorpe	487439.26	409047.75	2	7001	00195797	01/04/2010 00:00	5	2	BETWEEN 30-50 MPH	BACK OF FOOTPATH	0	POST TOP	NOT APPLICABLE	RIGID COLUMN	URBIS	AXIA 2 S1	MALLATITE	TUBULAR STEEL	6	GALVANISED	STEPPED TUBULAR	
46101662	WHITMAN ROAD	Scunthorpe	487428.2	409016.81	3	7002	00195798	01/04/2010 00:00	5	2	BETWEEN 30-50 MPH	BACK OF FOOTPATH	0	POST TOP	NOT APPLICABLE	RIGID COLUMN	URBIS	AXIA 2 S1	MALLATITE	TUBULAR STEEL	6	GALVANISED	STEPPED TUBULAR	
46101662	WHITMAN ROAD	Scunthorpe	487438.84	408991.33	4	7003	00195799	01/04/2010 00:00	5	2	BETWEEN 30-50 MPH	BACK OF FOOTPATH	0	POST TOP	NOT APPLICABLE	RIGID COLUMN	URBIS	AXIA 2 S1	MALLATITE	TUBULAR STEEL	6	GALVANISED	STEPPED TUBULAR	
46101662	WHITMAN ROAD	Scunthorpe	487427.5	408960.5	5	7004	00195800	01/04/2010 00:00	5	2	BETWEEN 30-50 MPH	BACK OF FOOTPATH	0	POST TOP	NOT APPLICABLE	RIGID COLUMN	URBIS	AXIA 2 S1	MALLATITE	TUBULAR STEEL	6	GALVANISED	STEPPED TUBULAR	
46101662	WHITMAN ROAD	Scunthorpe	487424	408929.87	6	7005	00195801	01/04/2010 00:00	5	2	BETWEEN 30-50 MPH	BACK OF FOOTPATH	0	POST TOP	NOT APPLICABLE	RIGID COLUMN	URBIS	AXIA 2 S1	MALLATITE	TUBULAR STEEL	6	GALVANISED	STEPPED TUBULAR	
46101662	WHITMAN ROAD	Scunthorpe	487436.04	408904.25	7	7006	00195802	01/04/2010 00:00	5	2	BETWEEN 30-50 MPH	BACK OF FOOTPATH	0	POST TOP	NOT APPLICABLE	RIGID COLUMN	URBIS	AXIA 2 S1	MALLATITE	TUBULAR STEEL	6	GALVANISED	STEPPED TUBULAR	
46101662	WHITMAN ROAD	Scunthorpe	487426.38	408874.99	8	7007	00195803	01/04/2010 00:00	5	2	BETWEEN 30-50 MPH	BACK OF FOOTPATH	0	POST TOP	NOT APPLICABLE	RIGID COLUMN	URBIS	AXIA 2 S1	MALLATITE	TUBULAR STEEL	6	GALVANISED	STEPPED TUBULAR	
46101662	WHITMAN ROAD	Scunthorpe	487438.56	408846.57	9	7008	00195804	01/04/2010 00:00	5	2	BETWEEN 30-50 MPH	BACK OF FOOTPATH	0	POST TOP	NOT APPLICABLE	RIGID COLUMN	URBIS	AXIA 2 S1	MALLATITE	TUBULAR STEEL	6	GALVANISED	STEPPED TUBULAR	
46101663	WHITTON ROAD	Alkborough Parish	488237.08	421879.53	1	7000	00195807	31/05/2018 00:00	1	2	LESS THAN 30MPH	ON POLE	300	SINGLE ARM	NOT APPLICABLE	POLE MOUNTED	URBIS	AXIA 2 S1	WOODEN PO	WOOD	5	NOT APPLICABI	PUDSEY DIAMOND	
46101663	WHITTON ROAD	Alkborough Parish	488496.79	422113.3	10	7009	00195816	31/05/2018 00:00	1	2	LESS THAN 30MPH	ON POLE	300	SINGLE ARM	NOT APPLICABLE	POLE MOUNTED	URBIS	AXIA 2 S1	WOODEN PO	WOOD	5	NOT APPLICABI	PUDSEY DIAMOND	
46101663	WHITTON ROAD	Alkborough Parish	488525.54	422154.17	11	7010	00195817	31/05/2018 00:00	1	2	LESS THAN 30MPH	ON POLE	300	SINGLE ARM	NOT APPLICABLE	POLE MOUNTED	URBIS	AXIA 2 S1	WOODEN PO	WOOD	5	NOT APPLICABI	PUDSEY DIAMOND	
46101663	WHITTON ROAD	Alkborough Parish	488270.09	421888.7	2	7001	00195808	31/05/2018 00:00	1	2	LESS THAN 30MPH	ON POLE	300	SINGLE ARM	NOT APPLICABLE	POLE MOUNTED	URBIS	AXIA 2 S1	WOODEN PO	WOOD	5	NOT APPLICABI	PUDSEY DIAMOND	
46101663	WHITTON ROAD	Alkborough Parish	488317.33	421898.93	3	7002	00195809	31/05/2018 00:00	1	2	LESS THAN 30MPH	ON POLE	300	SINGLE ARM	NOT APPLICABLE	POLE MOUNTED	URBIS	AXIA 2 S1	WOODEN PO	WOOD	5	NOT APPLICABI	PUDSEY DIAMOND	
46101663	WHITTON ROAD	Alkborough Parish	488357.62	421911.18	4	7003	00195810	31/05/2018 00:00	1	2	LESS THAN 30MPH	ON POLE	300	SINGLE ARM	NOT APPLICABLE	POLE MOUNTED	URBIS	AXIA 2 S1	WOODEN PO	WOOD	5	NOT APPLICABI	PUDSEY DIAMOND	
46101663	WHITTON ROAD	Alkborough Parish	488399.19	421935.02	5	7004	00195811	31/05/2018 00:00	1	2	LESS THAN 30MPH	ON POLE	300	SINGLE ARM	NOT APPLICABLE	POLE MOUNTED	URBIS	AXIA 2 S1	WOODEN PO	WOOD	5	NOT APPLICABI	PUDSEY DIAMOND	
46101663	WHITTON ROAD	Alkborough Parish	488410.37	421982.39	6	7005	00195812	31/05/2018 00:00	1	2	LESS THAN 30MPH	ON POLE	300	SINGLE ARM	NOT APPLICABLE	POLE MOUNTED	URBIS	AXIA 2 S1	WOODEN PO	WOOD	5	NOT APPLICABI	PUDSEY DIAMOND	
46101663	WHITTON ROAD	Alkborough Parish	488435.5	422014.77	7	7006	00195813	31/05/2018 00:00	1	2	LESS THAN 30MPH	ON POLE	300	SINGLE ARM	NOT APPLICABLE	POLE MOUNTED	URBIS	AXIA 2 S1	WOODEN PO	WOOD	5	NOT APPLICABI	PUDSEY DIAMOND	
46101663	WHITTON ROAD	Alkborough Parish	488457.36	422050.55	8	7007	00195814	31/05/2018 00:00	1	2	LESS THAN 30MPH	ON POLE	300	SINGLE ARM	NOT APPLICABLE	POLE MOUNTED	URBIS	AXIA 2 S1	WOODEN PO	WOOD	5	NOT APPLICABI	PUDSEY DIAMOND	
46101663	WHITTON ROAD	Alkborough Parish	488468.58	422070.01	9	7008	00195815	31/05/2018 00:00	1	2	LESS THAN 30MPH	ON POLE	300	SINGLE ARM	NOT APPLICABLE	POLE MOUNTED	URBIS	AXIA 2 S1	WOODEN PO	WOOD	5	NOT APPLICABI	PUDSEY DIAMOND	
46101665	WILKIE CLOSE	Scunthorpe	487041.94	411299.23	1	7000	00195818	01/10/2012 00:00	2	2	LESS THAN 30MPH	BACK OF FOOTPATH	0	POST TOP	NOT APPLICABLE	RIGID COLUMN	URBIS	AXIA 2 S1	MALLATITE	TUBULAR STEEL	6	GALVANISED	TUBULAR	
46101665	WILKIE CLOSE	Scunthorpe	487073.75	411295.62	2	7001	00195819	01/10/2012 00:00	2	2	LESS THAN 30MPH	BACK OF FOOTPATH	0	POST TOP	NOT APPLICABLE	RIGID COLUMN	URBIS	AXIA 2 S1	MALLATITE	TUBULAR STEEL	6	GALVANISED	TUBULAR	
46101665	WILKIE CLOSE	Scunthorpe	487110.55	411291.39	3	7002	00195820	01/10/2012 00:00	2	2	LESS THAN 30MPH	BACK OF FOOTPATH	0	POST TOP	NOT APPLICABLE	RIGID COLUMN	URBIS	AXIA 2 S1	MALLATITE	TUBULAR STEEL	6	GALVANISED	TUBULAR	
46101665	WILKIE CLOSE	Scunthorpe	487089.7	411273.41	4	7003	00195821	01/10/2012 00:00	2	2	LESS THAN 30MPH	BACK OF FOOTPATH	0	POST TOP	NOT APPLICABLE	RIGID COLUMN	URBIS	AXIA 2 S1	MALLATITE	TUBULAR STEEL	6	GALVANISED	TUBULAR	
46101665	WILKIE CLOSE	Scunthorpe	487083.37	411248.09	5	7004	00195822	01/10/2012 00:00	2	2	NOT ON A ROAD	VERGE	0	POST TOP	NOT APPLICABLE	RIGID COLUMN	URBIS	AXIA 2 S1	MALLATITE	TUBULAR STEEL	6	GALVANISED	TUBULAR	
46101665	WILKIE CLOSE	Scunthorpe	487080.02	411211.24	6	7005	00195823	01/04/2008 00:00	2	2	NOT ON A ROAD	VERGE	0	POST TOP	NOT APPLICABLE	MID HINGED	URBIS	AXIA 2 S1	PETITJEAN	SHEET STEEL	5	GALVANISED	LEVEN	
46101665	WILKIE CLOSE	Scunthorpe	487116.13	411217.56	7	7006	00195824	01/04/2008 00:00	2	2	NOT ON A ROAD	VERGE	0	POST TOP	NOT APPLICABLE	MID HINGED	URBIS	AXIA 2 S1	PETITJEAN	SHEET STEEL	5	GALVANISED	LEVEN	
46101666	WILLIAM STREET	Scunthorpe	489930.11	410803.12	1	7000	00195825	01/04/1992 00:00	2	4	LESS THAN 30MPH	FRONT OF FOOTPATH	0	POST TOP	BLACK	RIGID COLUMN	URBIS	ABBEY	KINGSWOOD	TUBULAR STEEL	5	PAINTED	METRO	
46101666	WILLIAM STREET	Scunthorpe	489938.39	410813.89	2	7001	00195826	01/04/1992 00:00	2	4	LESS THAN 30MPH	FRONT OF FOOTPATH	0	POST TOP	BLACK	RIGID COLUMN	URBIS	ABBEY	KINGSWOOD	TUBULAR STEEL	5	PAINTED	METRO	
46101666	WILLIAM STREET	Scunthorpe	489928.1	410827	3	7002	00195827	01/04/1992 00:00	2	4	LESS THAN 30MPH	FRONT OF FOOTPATH	0	POST TOP	BLACK	RIGID COLUMN	URBIS	ABBEY	KINGSWOOD	TUBULAR STEEL	5	PAINTED	METRO	
46101666	WILLIAM STREET	Scunthorpe	489936.06	410842.29	4	7003	00195828	01/04/1992 00:00	2	4	LESS THAN 30MPH	FRONT OF FOOTPATH	0	POST TOP	BLACK	RIGID COLUMN	URBIS	ABBEY	KINGSWOOD	TUBULAR STEEL	5	PAINTED	METRO	
46101666	WILLIAM STREET	Scunthorpe	489925.1	410859.58	5	7004	00195829	01/04/1992 00:00	2	4	LESS THAN 30MPH	FRONT OF FOOTPATH	0	POST TOP	BLACK	RIGID COLUMN	URBIS	ABBEY	KINGSWOOD	TUBULAR STEEL	5	PAINTED	METRO	
46101667	WILLIAMS DRIVE	Ulceby Parish	511227.85	414942.26	1	7000	00195830	01/04/2008 00:00	3	1	LESS THAN 30MPH	FRONT OF FOOTPATH	0	POST TOP	NOT APPLICABLE	RIGID COLUMN	URBIS	AXIA 2 S1	BRITISH STEE	TUBULAR STEEL	6	GALVANISED	ASH	
46101667	WILLIAMS DRIVE	Ulceby Parish	511254.25	414939.99	2	7001	00195831	01/04/1993 00:00	3	1	LESS THAN 30MPH	BACK OF FOOTPATH	300	SINGLE ARM	NOT APPLICABLE	RIGID COLUMN	URBIS	AXIA 2 S1	PETITJEAN	SHEET STEEL	5	GALVANISED	DAER	
46101667	WILLIAMS DRIVE	Ulceby Parish	511275.29	414953.96	3	7002	00195832	01/04/2001 00:00	3	1	LESS THAN 30MPH	BACK OF FOOTPATH	0	POST TOP	NOT APPLICABLE	RIGID COLUMN	URBIS	AXIA 2 S1	MALLATITE	TUBULAR STEEL	5	GALVANISED	STEPPED TUBULAR	
46101667	WILLIAMS DRIVE	Ulceby Parish	511300.98

46101696	WOODLAND WAY	Epworth Parish	478791.62	403660.58	4	7003	00195997	12/12/2018 00:00	5	3	LESS THAN 30MPH	BACK OF FOOTPATH	0	POST TOP	NOT APPLICABLE	RIGID COLUMN	URBIS	AXIA 2 S1	MALLATITE	TUBULAR STEEL	6	GALVANISED	TUBULAR
46101696	WOODLAND WAY	Epworth Parish	478790.38	403695.01	5	7004	00195998	12/12/2018 00:00	5	3	LESS THAN 30MPH	BACK OF FOOTPATH	0	POST TOP	NOT APPLICABLE	RIGID COLUMN	URBIS	AXIA 2 S1	MALLATITE	TUBULAR STEEL	6	GALVANISED	TUBULAR
46101698	WOODS LANE	South Killingholme Parish	515362.4	415950.37	1	7000	00195999	01/04/1980 00:00	3	1	LESS THAN 30MPH	VERGE	0	POST TOP	NOT APPLICABLE	RIGID COLUMN	URBIS	AXIA 2 S1	FABRIKAT	TUBULAR STEEL	5	GALVANISED	5M01A
46101698	WOODS LANE	South Killingholme Parish	515338.34	415942.05	2	7001	00196000	01/04/1980 00:00	3	1	LESS THAN 30MPH	VERGE	0	POST TOP	MID GREY	RIGID COLUMN	URBIS	AXIA 2 S1	FABRIKAT	TUBULAR STEEL	5	PAINTED	5M01A
46101698	WOODS LANE	South Killingholme Parish	515313.78	415927.63	3	7002	00196001	01/04/1980 00:00	3	1	LESS THAN 30MPH	VERGE	0	POST TOP	MID GREY	RIGID COLUMN	URBIS	AXIA 2 S1	FABRIKAT	TUBULAR STEEL	5	PAINTED	5M01A
46101698	WOODS LANE	South Killingholme Parish	515288.3	415925.16	4	7003	00196002	01/04/1980 00:00	3	1	LESS THAN 30MPH	VERGE	0	POST TOP	MID GREY	RIGID COLUMN	URBIS	AXIA 2 S1	FABRIKAT	TUBULAR STEEL	5	PAINTED	5M01A
46101698	WOODS LANE	South Killingholme Parish	515256.04	415911.1	5	7004	00196003	01/04/1980 00:00	3	1	LESS THAN 30MPH	VERGE	0	POST TOP	MID GREY	RIGID COLUMN	URBIS	AXIA 2 S1	FABRIKAT	TUBULAR STEEL	5	PAINTED	5M01A
46101699	WOODS MEADOW	Hibaldstow Parish	497582.03	402973.99	1	7000	00196004	01/04/1988 00:00	1	4	LESS THAN 30MPH	FRONT OF FOOTPATH	0	POST TOP	MID GREY	RIGID COLUMN	URBIS	AXIA 2 S1	PETITJEAN	SHEET STEEL	5	PAINTED	NIDD
46101699	WOODS MEADOW	Hibaldstow Parish	497355.87	403020	10	7009	00196013	01/04/1988 00:00	1	4	LESS THAN 30MPH	VERGE	0	POST TOP	LIGHT GREY	RIGID COLUMN	URBIS	AXIA 2 S1	PETITJEAN	SHEET STEEL	5	PAINTED	NIDD
46101699	WOODS MEADOW	Hibaldstow Parish	497354.33	403039.83	11	7010	00196014	01/04/1992 00:00	1	4	LESS THAN 30MPH	VERGE	0	POST TOP	LIGHT GREY	RIGID COLUMN	URBIS	AXIA 2 S1	PETITJEAN	SHEET STEEL	5	PAINTED	NIDD
46101699	WOODS MEADOW	Hibaldstow Parish	497550.56	402970.05	2	7001	00196005	01/04/1988 00:00	1	4	LESS THAN 30MPH	VERGE	0	POST TOP	LIGHT GREY	RIGID COLUMN	URBIS	AXIA 2 S1	PETITJEAN	SHEET STEEL	5	PAINTED	NIDD
46101699	WOODS MEADOW	Hibaldstow Parish	497518.02	402968.61	3	7002	00196006	01/04/1988 00:00	1	4	LESS THAN 30MPH	VERGE	0	POST TOP	LIGHT GREY	RIGID COLUMN	URBIS	AXIA 2 S1	PETITJEAN	SHEET STEEL	5	PAINTED	NIDD
46101699	WOODS MEADOW	Hibaldstow Parish	497487.78	402968.95	4	7003	00196007	01/04/1989 00:00	1	4	LESS THAN 30MPH	VERGE	0	POST TOP	LIGHT GREY	RIGID COLUMN	URBIS	AXIA 2 S1	PETITJEAN	SHEET STEEL	5	PAINTED	NIDD
46101699	WOODS MEADOW	Hibaldstow Parish	497457.82	402966	5	7004	00196008	01/04/1989 00:00	1	4	LESS THAN 30MPH	VERGE	0	POST TOP	LIGHT GREY	RIGID COLUMN	URBIS	AXIA 2 S1	PETITJEAN	SHEET STEEL	5	PAINTED	NIDD
46101699	WOODS MEADOW	Hibaldstow Parish	497427.81	402958.33	6	7005	00196009	01/04/1988 00:00	1	4	LESS THAN 30MPH	VERGE	0	POST TOP	LIGHT GREY	RIGID COLUMN	URBIS	AXIA 2 S1	PETITJEAN	SHEET STEEL	5	PAINTED	NIDD
46101699	WOODS MEADOW	Hibaldstow Parish	497399.78	402950.21	7	7006	00196010	01/04/1988 00:00	1	4	LESS THAN 30MPH	VERGE	0	POST TOP	LIGHT GREY	RIGID COLUMN	URBIS	AXIA 2 S1	PETITJEAN	SHEET STEEL	5	PAINTED	NIDD
46101699	WOODS MEADOW	Hibaldstow Parish	497380.27	402962.92	8	7007	00196011	01/04/1988 00:00	1	4	LESS THAN 30MPH	VERGE	0	POST TOP	LIGHT GREY	RIGID COLUMN	URBIS	AXIA 2 S1	PETITJEAN	SHEET STEEL	5	PAINTED	NIDD
46101699	WOODS MEADOW	Hibaldstow Parish	497364.01	402990.24	9	7008	00196012	01/04/1988 00:00	1	4	LESS THAN 30MPH	VERGE	0	POST TOP	LIGHT GREY	RIGID COLUMN	URBIS	AXIA 2 S1	PETITJEAN	SHEET STEEL	5	PAINTED	NIDD
46101700	WOODSIDE LANE	Wroot Parish	471556.96	403070.78	1	7000	00196015	01/04/1993 00:00	6	3	LESS THAN 30MPH	BACK OF FOOTPATH	300	SINGLE ARM	NOT APPLICABLE	RIGID COLUMN	URBIS	AXIA 2 S1	PETITJEAN	SHEET STEEL	5	GALVANISED	DAER
46101700	WOODSIDE LANE	Wroot Parish	471944.67	403047.34	10	7009	00196024	27/11/2018 00:00	6	3	LESS THAN 30MPH	ON POLE	300	SINGLE ARM	NOT APPLICABLE	POLE MOUNTED	URBIS	AXIA 2 S1	WOODEN PO	WOOD	5	NOT APPLICABI	PUDSEY DIAMOND
46101700	WOODSIDE LANE	Wroot Parish	471978.27	403056.21	11	7010	00196025	27/11/2018 00:00	6	3	GREATER THAN 50MPH	ON POLE	300	SINGLE ARM	DARK GREY	POLE MOUNTED	URBIS	AXIA 2 S1	WOODEN PO	WOOD	5	PAINTED	PUDSEY DIAMOND
46101700	WOODSIDE LANE	Wroot Parish	472019.61	403068.07	12	7011	00196026	27/11/2018 00:00	6	3	GREATER THAN 50MPH	ON POLE	300	SINGLE ARM	DARK GREY	POLE MOUNTED	URBIS	AXIA 2 S1	WOODEN PO	WOOD	5	PAINTED	PUDSEY DIAMOND
46101700	WOODSIDE LANE	Wroot Parish	472061.65	403080.31	13	7012	00196027	27/11/2018 00:00	6	3	GREATER THAN 50MPH	ON POLE	300	SINGLE ARM	DARK GREY	POLE MOUNTED	URBIS	AXIA 2 S1	WOODEN PO	WOOD	5	PAINTED	PUDSEY DIAMOND
46101700	WOODSIDE LANE	Wroot Parish	471594.02	403051.59	2	7001	00196016	26/11/2018 00:00	6	3	LESS THAN 30MPH	ON POLE	300	SINGLE ARM	DARK GREY	POLE MOUNTED	URBIS	AXIA 2 S1	WOODEN PO	WOOD	5	PAINTED	PUDSEY DIAMOND
46101700	WOODSIDE LANE	Wroot Parish	471636.57	403046.57	3	7002	00196017	26/11/2018 00:00	6	3	LESS THAN 30MPH	ON POLE	300	SINGLE ARM	DARK GREY	POLE MOUNTED	URBIS	AXIA 2 S1	WOODEN PO	WOOD	5	PAINTED	PUDSEY DIAMOND
46101700	WOODSIDE LANE	Wroot Parish	471682.95	403042.84	4	7003	00196018	27/11/2018 00:00	6	3	LESS THAN 30MPH	ON POLE	300	SINGLE ARM	DARK GREY	POLE MOUNTED	URBIS	AXIA 2 S1	WOODEN PO	WOOD	5	PAINTED	PUDSEY DIAMOND
46101700	WOODSIDE LANE	Wroot Parish	471738.07	403036.78	5	7004	00196019	27/11/2018 00:00	6	3	LESS THAN 30MPH	ON POLE	300	SINGLE ARM	DARK GREY	POLE MOUNTED	URBIS	AXIA 2 S1	WOODEN PO	WOOD	5	PAINTED	PUDSEY DIAMOND
46101700	WOODSIDE LANE	Wroot Parish	471772.81	403034.64	6	7005	00196020	26/11/2018 00:00	6	3	LESS THAN 30MPH	ON POLE	300	SINGLE ARM	DARK GREY	POLE MOUNTED	URBIS	AXIA 2 S1	WOODEN PO	WOOD	5	PAINTED	PUDSEY DIAMOND
46101700	WOODSIDE LANE	Wroot Parish	471813.62	403030.53	7	7006	00196021	27/11/2018 00:00	6	3	LESS THAN 30MPH	ON POLE	300	SINGLE ARM	DARK GREY	POLE MOUNTED	URBIS	AXIA 2 S1	WOODEN PO	WOOD	5	PAINTED	PUDSEY DIAMOND
46101700	WOODSIDE LANE	Wroot Parish	471871.2	403030.69	8	7007	00196022	27/11/2018 00:00	6	3	LESS THAN 30MPH	ON POLE	300	SINGLE ARM	DARK GREY	POLE MOUNTED	URBIS	AXIA 2 S1	WOODEN PO	WOOD	5	PAINTED	PUDSEY DIAMOND
46101700	WOODSIDE LANE	Wroot Parish	471903.65	403038.38	9	7008	00196023	27/11/2018 00:00	6	3	LESS THAN 30MPH	ON POLE	300	SINGLE ARM	DARK GREY	POLE MOUNTED	URBIS	AXIA 2 S1	WOODEN PO	WOOD	5	PAINTED	PUDSEY DIAMOND
46101701	WOODSTOCK ROAD	Scunthorpe	490585.85	410025.23	1	7000	00196028	01/04/1980 00:00	2	4	LESS THAN 30MPH	BACK OF FOOTPATH	300	SINGLE ARM	MID GREY	RIGID COLUMN	URBIS	AXIA 2 S1	PETITJEAN	SHEET STEEL	5	PAINTED	DAER
46101701	WOODSTOCK ROAD	Scunthorpe	490569.02	410014.71	2	7001	00196029	01/04/1980 00:00	2	4	LESS THAN 30MPH	BACK OF FOOTPATH	300	SINGLE ARM	MID GREY	RIGID COLUMN	URBIS	AXIA 2 S1	PETITJEAN	SHEET STEEL	5	PAINTED	DAER
46101701	WOODSTOCK ROAD	Scunthorpe	490579.75	409995.72	3	7002	00196030	01/04/1980 00:00	2	4	LESS THAN 30MPH	BACK OF FOOTPATH	300	SINGLE ARM	MID GREY	RIGID COLUMN	URBIS	AXIA 2 S1	PETITJEAN	SHEET STEEL	5	PAINTED	DAER
46101701	WOODSTOCK ROAD	Scunthorpe	490581.48	409972.88	4	7003	00196031	01/04/1980 00:00	2	4	LESS THAN 30MPH	BACK OF FOOTPATH	300	SINGLE ARM	MID GREY	RIGID COLUMN	URBIS	AXIA 2 S1	PETITJEAN	SHEET STEEL	5	PAINTED	DAER
46101701	WOODSTOCK ROAD	Scunthorpe	490583.58	409947.63	5	7004	00196032	01/04/1980 00:00	2	4	LESS THAN 30MPH	BACK OF FOOTPATH	300	SINGLE ARM	MID GREY	RIGID COLUMN	URBIS	AXIA 2 S1	PETITJEAN	SHEET STEEL	5	PAINTED	DAER
46101701	WOODSTOCK ROAD	Scunthorpe	490575.16	409923.88	6	7005	00196033	01/04/1980 00:00	2	4	LESS THAN 30MPH	BACK OF FOOTPATH	300	SINGLE ARM	MID GREY	RIGID COLUMN	URBIS	AXIA 2 S1	PETITJEAN	SHEET STEEL	5	PAINTED	DAER
46101702	WOOLLIN AVENUE	Scunthorpe	489209.25	408723.05	1	7000	00196034	01/04/2001 00:00	5	2	LESS THAN 30MPH	BACK OF FOOTPATH	300	SINGLE ARM	NOT APPLICABLE	RIGID COLUMN	URBIS	AXIA 2 S1	MALLATITE	TUBULAR STEEL	5	GALVANISED	STEPPED TUBULAR
46101702	WOOLLIN AVENUE	Scunthorpe	489171.35	408731.29	2	7001	00196035	28/04/2021 00:00	5	2	LESS THAN 30MPH	BACK OF FOOTPATH	0	POST TOP	NOT APPLICABLE	RIGID COLUMN	URBIS	AXIA 2 S1	MALLATITE	TUBULAR STEEL	6	GALVANISED	TUBULAR
46101702	WOOLLIN AVENUE	Scunthorpe	489132.67	408726.19	3	7002	00196036	28/04/2021 00:00	5	2	LESS THAN 30MPH	BACK OF FOOTPATH	0	POST TOP	NOT APPLICABLE	RIGID COLUMN	URBIS	AXIA 2 S1	MALLATITE	TUBULAR STEEL	6	GALVANISED	TUBULAR
46101702	WOOLLIN AVENUE	Scunthorpe	489132.11	408753.86	4	7003	00196037	01/04/2001 00:00	5	2	LESS THAN 30MPH	BACK OF FOOTPATH	0	POST TOP	NOT APPLICABLE	RIGID COLUMN	URBIS	AXIA 2 S1	MALLATITE	TUBULAR STEEL	5	GALVANISED	STEPPED TUBULAR
46101703	FOOTPATH BART6	Barton upon Humber Parish	503722.51	421138.15	1	7000	00192510	01/04/1982 00:00	5	2	NOT ON A ROAD	BACK OF FOOTPATH	0	POST TOP	NOT APPLICABLE	MID HINGED	URBIS	AXIA 2 S1	PETITJEAN	SHEET STEEL	5	GALVANISED	LEVEN
46101704	WORCESTER CLOSE	Bottesford Parish	489519.94	406631.83	1	7000	00196038	01/04/1980 00:00	3	1	LESS THAN 30MPH	BACK OF FOOTPATH	0	POST TOP	NOT APPLICABLE	RIGID COLUMN	URBIS	AXIA 2 S1	PETITJEAN	SHEET STEEL	5	GALVANISED	NIDD
46101704	WORCESTER CLOSE	Bottesford Parish	489509.99	406655.49	2	7001	00196039	01/04/1980 00:00	3	1	LESS THAN 30MPH	BACK OF FOOTPATH	0	POST TOP	NOT APPLICABLE	RIGID COLUMN	URBIS	AXIA 2 S1	PETITJEAN	SHEET STEEL	5	GALVANISED	NIDD
46101704	WORCESTER CLOSE	Bottesford Parish	489502.85	406681.49	3	7002	00196040	01/04/1980 00:00	3	1	LESS THAN 30MPH	BACK OF FOOTPATH	0	POST TOP	NOT APPLICABLE	RIGID COLUMN	URBIS	AXIA 2 S1	PETITJEAN	SHEET STEEL	5	GALVANISED	NIDD
46101704	WORCESTER CLOSE	Bottesford Parish	489497.35	406709.76	4	7003	00196041	01/04/1980 00:00	3	1	LESS THAN 30MPH	BACK OF FOOTPATH	0	POST TOP	NOT APPLICABLE	RIGID COLUMN	URBIS	AXIA 2 S1	PETITJEAN	SHEET STEEL	5	GALVANISED	NIDD
46101704	WORCESTER CLOSE	Bottesford Parish	489488.14	406746.94	5	7004	00196042	01/04/1980 00:00	3	1	LESS THAN 30MPH	BACK OF FOOTPATH	0	POST TOP	NOT APPLICABLE	RIGID COLUMN	URBIS	AXIA 2 S1	PETITJEAN	SHEET STEEL	5	GALVANISED	NIDD
46101705	WORDSWORTH ROAD	Scunthorpe	487624.66	409063.14	1	7000	00196043	01/04/2010 00:00	5	2	BETWEEN 30-50 MPH	BACK OF FOOTPATH	0	POST TOP	NOT APPLICABLE	RIGID COLUMN	URBIS	AXIA 2 S1	MALLATITE	TUBULAR STEEL	6	GALVANISED	STEPPED TUBULAR
46101705	WORDSWORTH ROAD	Scunthorpe	487625.64	408833.12	10	7009	00196052	01/04/2010 00:00	5	2	BETWEEN 30-50 MPH	BACK OF FOOTPATH	0	POST TOP	NOT APPLICABLE	RIGID COLUMN	URBIS	AXIA 2 S1	MALLATITE	TUBULAR STEEL	6	GALVANISED	STEPPED TUBULAR
46101705	WORDSWORTH ROAD	Scunthorpe	487615.7	408806.94	11	7010	00196053	01/04/2010 00:00	5	2	BETWEEN 30-50 MPH	BACK OF FOOTPATH	0	POST TOP	NOT APPLICABLE	RIGID COLUMN	URBIS	AXIA 2 S1	MALLATITE	TUBULAR STEEL	6	GALVANISED	STEPPED TUBULAR
46101705	WORDSWORTH ROAD	Scunthorpe	487614.16	408780.34	12	7011	00196054	01/04/2010 00:00	5	2	BETWEEN 30-50 MPH	BACK OF FOOTPATH	0	POST TOP	NOT APPLICABLE	RIGID COLUMN	URBIS	AXIA 2 S1	MALLATITE	TUBULAR STEEL	6	GALVANISED	STEPPED TUBULAR
46101705	WORDSWORTH ROAD	Scunthorpe	487616.68	409030.52	2	7001	00196044	01/04/2010 00:00	5	2	BETWEEN 30-50 MPH	BACK OF FOOTPATH	0	POST TOP	NOT APPLICABLE	RIGID COLUMN	URBIS	AXIA 2 S1	MALLATITE	TUBULAR STEEL	6	GALVANISED	STEPPED TUBULAR
46101705	WORDSWORTH ROAD	Scunthorpe	487624.66	409006.86	3	7002	00196045	01/04/2010 00:00	5	2	BETWEEN 30-50 MPH	BACK OF FOOTPATH	0	POST TOP	NOT APPLICABLE	RIGID COLUMN	URBIS	AXIA 2 S1	MALLATITE	TUBULAR STEEL	6	GALVANISED	STEPPED TUBULAR
46101705	WORDSWORTH ROAD	Scunthorpe	487614.16	408979.56	4	7003	00196046	01/04/2010 00:00	5	2	BETWEEN 30-50 MPH	BACK OF FOOTPATH	0	POST TOP	NOT APPLICABLE	RIGID COLUMN	URBIS	AXIA 2 S1	MALLATITE	TUBULAR STEEL	6	GALVANISED	STEPPED TUBULAR
46101705	WORDSWORTH ROAD	Scunthorpe	487621.02	408961.2	5	7004	00196047	01/04/2010 00:00	5	2	BETWEEN 30-50 MPH	BACK OF FOOTPATH	0	POST TOP	NOT APPLICABLE	RIGID COLUMN	URBIS	AXIA 2 S1	MALLATITE	TUBULAR STEEL	6	GALVANISED	STEPPED TUBULAR
46101705	WORDSWORTH ROAD	Scunthorpe	487611.5	408945.96	6	7005	00196048	01/04/2010 00:00	5	2	BETWEEN 30-50 MPH	BACK OF FOOTPATH	0	POST TOP	NOT APPLICABLE	RIGID COLUMN	URBIS	AXIA 2 S1	MALLATITE	TUBULAR STEEL	6	GALVANISED	STEPPED TUBULAR
46101705	WORDSWORTH ROAD	Scunthorpe	487619.2	408915.86	7	7006	00196049	01/04/2010 00:00	5	2	BETWEEN 30-50 MPH	BACK OF FOOTPATH	0	POST TOP	NOT APPLICABLE	RIGID COLUMN	URBIS	AXIA 2 S1	MALLATITE	TUBULAR STEEL	6	GALVANISED	STEPPED TUBULAR
46101705	WORDSWORTH ROAD	Scunthorpe	487623.12	408886.88	8	7007	00196050	01/04/2010 00:00	5	2	BETWEEN 30-50 MPH	BACK OF FOOTPATH	0	POST TOP	NOT APPLICABLE	RIGID COLUMN	URBIS	AXIA 2 S1	MALLATITE	TUBULAR STEEL	6	GALVANISED	STEPPED TUBULAR
46101705	WORDSWORTH ROAD	Scunthorpe	487614.86	408867.28	9	7008	00196051	01/04/2010 00:00	5	2	BETWEEN 30-50 MPH	BACK OF FOOTPATH	0	POST TOP	NOT APPLICABLE	RIGID COLUMN	URBIS	AXIA 2 S1	MALLATITE	TUBULAR STEEL	6	GALVANISED	STEPPED TUBULAR
46101706	carr lane	Bonby Parish	500541.64	414736.1	1	7000	00196055	01/04/1973 00:00	6	2	LESS THAN 30MPH	ON POLE	500	SINGLE ARM	NOT APPLICABLE	POLE MOUNTED	URBIS	AXIA 2 S1	WOODEN PO	WOOD	5	NOT APPLICABI	Not Applicable
46101706	carr lane	Bonby Parish	500532.21	414779.73	2	7001	00196056	01/04/1973 00:00	6	2	LESS THAN 30MPH	ON POLE	500	SINGLE ARM	NOT APPLICABLE	POLE MOUNTED	URBIS	AXIA 2 S1	WOODEN PO	WOOD	5	NOT APPLICABI	Not Applicable
46101706	carr lane	Bonby Parish	500523.83	414818.36	3	7002	00196057	01/04/1973 00:00	6	2	LESS THAN 30MPH	ON POLE	500	SINGLE ARM	NOT APPLICABLE	POLE MOUNTED	URBIS	AXIA 2 S1	WOODEN PO	WOOD	5	NOT APPLICABI	Not Applicable
46101706	carr lane	Bonby Parish	500513.72	414869.5	4	7003	00196058	01/04/1973 00:00	6	2	LESS THAN 30MPH	ON POLE	500	SINGLE ARM	NOT APPLICABLE	POLE MOUNTED	URBIS	AXIA 2 S1	WOODEN PO	WOOD	5	NOT APPLICABI	Not Applicable
46101706	carr lane	Bonby Parish	500507.66	414914.09	5	7004	00196059	01/04/1980 00:00	6	2	LESS THAN 30MPH	BACK OF FOOTPATH	300	SINGLE ARM	NOT APPLICABLE	RIGID COLUMN	URBIS	AXIA 2 S1	PETITJEAN	SHEET STEEL	5	GALVANISED	DAER
46101706	carr lane	Bonby Parish	500483.75	414951.68	6	7005	00196060	01/04/1973 00:00	6	2	LESS THAN 30MPH	ON POLE	500	SINGLE ARM	NOT APPLICABLE	POLE MOUNTED	URBIS	AXIA 2 S1	WOODEN PO	WOOD	5	NOT APPLICABI	Not Applicable
46101706	carr lane	Bonby Parish	500468.23	414993.14	7	7006	00196061	01/04/1973 00:00	6	2	LESS THAN 30MPH	ON POLE	500	SINGLE ARM	NOT APPLICABLE	POLE MOUNTED	URBIS	AXIA 2 S1	WOODEN PO	WOOD	5	NOT APPLICABI	Not Applicable
46101706	carr lane	Bonby Parish	500451.17	415038.4	8	7007	00196062	01/04/1973 00:00	6	2	LESS THAN 30MPH	ON POLE	500	SINGLE ARM	NOT APPLICABLE	POLE MOUNTED	URBIS	AXIA 2 S1	WOODEN PO	WOOD	5	NOT APPLICABI	Not Applicable
46101706	carr lane	Bonby Parish	500435.73	415082.2	9	7008	00196063	01/04/1973 00:00	6	2	LESS THAN 30MPH	ON POLE	500	SINGLE ARM	NOT APPLICABLE	POLE MOUNTED	URBIS	AXIA 2 S1	WOODEN PO	WOOD	5	NOT APPLICABI	Not Applicable
46101707	WORTLEY STREET	Scunthorpe	489395.93	410555.19	1	7000	00196064	01/04/1995 00:00	2	4	LESS THAN 30MPH	BACK OF FOOTPATH	0	POST TOP	NOT APPLICABLE	RIGID COLUMN	URBIS	AXIA 2 S1	PETITJEAN	SHEET STEEL	5	GALVANISED	NIDD
46101707	WORTLEY STREET	Scunthorpe	489392.78	410526.89	2	7001	00196065	01/04/1995 00:00	2	4	LESS THAN 30MPH	BACK OF FOOTPATH	0	POST TOP	NOT APPLICABLE	RIGID COLUMN	URBIS	AXIA 2 S1	PETITJEAN	SHEET STEEL	5	GALVANISED	NIDD
46101707	WORTLEY STREET	Scunthorpe	489399.86	410510.96	3	7002	00196066	01/04/1995 00:00	2	4	LESS THAN 30MPH	BACK OF FOOTPATH	0	POST TOP	NOT APPLICABLE	RIGID COLUMN	URBIS	AXIA 2 S1	PETITJEAN	SHEET STEEL	5	GALVANISED	NIDD
46101709	WRAWBY ROAD	Scunthorpe	488336.38	408132.02	1	7000	00196067	24/06/2019 00:00	3	4	LESS THAN 30MPH	BACK OF FOOTPATH	0	POST TOP	NOT APPLICABLE	RIGID COLUMN	URBIS	AXIA 2 S1	MALLATITE	TUBULAR STEEL	6	GALVANISED	TUBULAR
46101709	WRAWBY ROAD	Scunthorpe	488346.1	408165.58	2	7001	00196068	24/06/2019 00:00	3	4	LESS THAN 30MPH	BACK OF FOOTPATH	0	POST TOP	NOT APPLICABLE	RIGID COLUMN	URBIS	AXIA 2 S1	MALLATITE	TUBULAR STEEL	6	GALVANISED	TUBULAR
46101709	WRAWBY ROAD	Scunthorpe	488339.81	408202.79	3	7002	00196069	24/06/2019 00:00	3	4	LESS THAN 30MPH	BACK OF FOOTPATH	500	POST TOP	NOT APPLICABLE	RIGID COLUMN	URBIS	AXIA 2 S1	MALLATITE	TUBULAR STEEL	6	GALVANISED	TUBULAR
46101710	WRAY STREET	Kirton in Lindsey Parish	493567.49	398540.04	1	7000	00196070	01/04/1980 00:00	1	3	LESS THAN 30MPH	BACK OF FOOTPATH	0	POST TOP	LIGHT GREY	RIGID COLUMN	URBIS	AXIA 2 S1	PETITJEAN	SHEET STEEL	5	PAINTED	NIDD
46101710	WRAY STREET	Kirton in Lindsey Parish	493575.91	398511.24	2	7001	00196071	09/01/2019 00:00	1	3	LESS THAN 30MPH	VERGE	0	POST TOP	NOT APPLICABLE	RIGID COLUMN	URBIS	AXIA 2 S1	MALLATITE	TUBULAR STEEL	6	GALVANISED	TUBULAR
46101711	WRESSLE ROAD	Broughton Parish	496555.47	408975.67	1	7000	00196072	01/04/1980 00:00	1	1	LESS THAN 30MPH	BACK OF FOOTPATH	800	SINGLE ARM	MID GREY	RIGID COLUMN	URBIS	AXIA 2 S1	PETITJEAN	SHEET STEEL	6	PAINTED	THAMES
46101711	WRESSLE ROAD	Broughton Parish	496584	409014.1	2	7001	00196073	01/04/1980 00:00	1	1	LESS THAN 30MPH	BACK OF FOOTPATH	800	SINGLE ARM	MID GREY	RIGID COLUMN	URBIS	AXIA 2 S1	PETITJEAN	SHEET STEEL	6	PAINTED	THAMES
46101711	WRESSLE ROAD	Broughton Parish	496607.8	409046.38	3	7002	00196074	01/04/1980 00:00	1	1	LESS THAN 30MPH	BACK OF FOOTPATH	800	SINGLE ARM	MID GREY	RIGID COLUMN	URBIS	AXIA 2 S1	PETITJEAN	SHEET STEEL	6	PAINTED	THAMES
46101711	WRESSLE ROAD	Broughton Parish	496646.71	409098.9	4	7003	00196075	01/04/1980 00:00	1	1	GREATER THAN 50MPH	BACK OF FOOTPATH	800	SINGLE ARM	MID GREY	RIGID COLUMN	URBIS	AXIA 2 S1	PETITJEAN	SHEET STEEL	6	PAINTED	DAER
46101711	WRESSLE ROAD	Broughton Parish	496690.18	409156.98	5	7004	00196076	01/04/1980 00:00	1	1	GREATER THAN 50MPH	BACK OF FOOTPATH	800	SINGLE ARM	MID GREY	RIGID COLUMN	URBIS	AXIA 2 S1	PETITJEAN	SHEET STEEL	6	PAINTED	DAER
46101711	WRESSLE ROAD	Broughton Parish	496732.8	409214.11	6	7005	00196077	01/04/2006 00:00	1	1	GREATER THAN 50MPH	BACK OF FOOTPATH	0	POST TOP	NOT APPLICABLE	RIGID COLUMN	URBIS	AXIA 2 S1	MALLATITE	TUBULAR STEEL	6	GALVANISED	STEPPED TUBULAR
46101711	WRESSLE ROAD	Broughton Parish	496775.24	409272.15	7	7006	00196078	01/04/1980 00:00	1	1	GREATER THAN 50MPH	BACK OF FOOTPATH	800	SINGLE ARM	MID GREY	RIGID COLUMN	URBIS	AXIA 2 S1	PETITJEAN	SHEET STEEL	6	PAINTED	DAER
46101712	WYATT AVENUE	Broughton Parish	495734.68	408175.91	1	7000	00196079	01/04/2010 00:00	1	1	LESS THAN 30MPH	BACK OF FOOTPATH	0	POST TOP	NOT APPLICABLE	RIGID COLUMN	URBIS	AXIA 2 S1	MALLATITE	TUBULAR STEEL	6	GALVANISED	TUBULAR
46101712	WYATT AVENUE	Broughton Parish	495702.77	408176.61	2	7001	00196080	04/03/2019 00:00	1	1	LESS THAN 30MPH	BACK OF FOOTPATH	0	POST TOP	NOT APPLICABLE	RIGID COLUMN	URBIS	AXIA 2 S1	MALLATITE	TUBULAR STEEL	6	GALVANISED	TUBULAR
46101713	WYNMOOR ROAD	Scunthorpe	488738.02	409184.91	1	7000	00196081	01/04/1993 00:00	5	4	LESS THAN 30MPH	BACK OF FOOTPATH	800	SINGLE ARM	NOT APPLICABLE	RIGID COLUMN	URBIS	AXIA 2 S1	PETITJEAN	SHEET STEEL	6	GALVANISED	DAER
46101713	WYNMOOR ROAD	Scunthorpe	488710.04	409193.9	2	7001	00196082	01/04/1993 00:00	5	4	LESS THAN 30MPH	BACK OF FOOTPATH	800	SINGLE ARM	NOT APPLICABLE	RIGID COLUMN	URBIS	AXIA 2 S1	PETITJEAN	SHEET STEEL	6	GALVANISED	DAER
46101713	WYNMOOR ROAD	Scunthorpe	488677.86	409178.25	3	7002	00196083	01/04/1993 00:00	5	4	LESS THAN 30MPH	BACK OF FOOTPATH	800	SINGLE ARM	NOT APPLICABLE	RIGID COLUMN	URBIS	AXIA 2 S1	PETITJEAN	SHEET ST

46101732	ASHBY ROAD	Scunthorpe	489171.23	409863.2	26	7005	00196231	01/04/1980 00:00	2	4	LESS THAN 30MPH	BACK OF FOOTPATH	1500	SINGLE ARM	LIGHT GREY	RIGID COLUMN	URBIS	AXIA 2 S1	PETITJEAN	SHEET STEEL	12	PAINTED	THAMES
46101732	ASHBY ROAD	Scunthorpe	489171.81	409822.74	27	7006	00196232	01/04/1980 00:00	2	4	LESS THAN 30MPH	BACK OF FOOTPATH	1500	SINGLE ARM	LIGHT GREY	RIGID COLUMN	URBIS	AXIA 2 S1	PETITJEAN	SHEET STEEL	12	PAINTED	THAMES
46101732	ASHBY ROAD	Scunthorpe	489172.88	409782.42	28	7007	00196233	01/04/1980 00:00	2	4	LESS THAN 30MPH	BACK OF FOOTPATH	1500	SINGLE ARM	LIGHT GREY	RIGID COLUMN	URBIS	AXIA 2 S1	PETITJEAN	SHEET STEEL	12	PAINTED	THAMES
46101732	ASHBY ROAD	Scunthorpe	489162.08	409743.57	29	7008	00196234	01/04/1980 00:00	2	4	LESS THAN 30MPH	BACK OF FOOTPATH	1500	SINGLE ARM	LIGHT GREY	RIGID COLUMN	URBIS	AXIA 2 S1	PETITJEAN	SHEET STEEL	12	PAINTED	THAMES
46101732	ASHBY ROAD	Scunthorpe	489251.95	410634	2X	7044	00196270	01/04/1978 00:00	2	4	LESS THAN 30MPH	BACK OF FOOTPATH	1500	SINGLE ARM	LIGHT GREY	RIGID COLUMN	URBIS	AXIA 2 S1	PETITJEAN	SHEET STEEL	12	PAINTED	THAMES
46101732	ASHBY ROAD	Scunthorpe	489252.7	410520.66	3	7045	00196271	19/03/2024 00:00	2	4	LESS THAN 30MPH	BACK OF FOOTPATH	1000	SINGLE ARM	NOT APPLICABLE	RIGID COLUMN	URBIS	AXIA 2 S1	STANTON	TUBULAR STEEL	10	GALVANISED	TUBULAR
46101732	ASHBY ROAD	Scunthorpe	489146.3	409717.26	30	7009	00196235	01/04/1980 00:00	2	4	LESS THAN 30MPH	BACK OF FOOTPATH	1500	SINGLE ARM	LIGHT GREY	RIGID COLUMN	URBIS	AXIA 2 S1	PETITJEAN	SHEET STEEL	12	PAINTED	THAMES
46101732	ASHBY ROAD	Scunthorpe	489108.87	409688.28	31	7010	00196236	27/03/2018 00:00	2	4	LESS THAN 30MPH	BACK OF FOOTPATH	1500	SINGLE ARM	LIGHT GREY	RIGID COLUMN	URBIS	AXIA 2 S1	PETITJEAN	SHEET STEEL	12	PAINTED	THAMES
46101732	ASHBY ROAD	Scunthorpe	489092.32	409661.02	32	7011	00196237	01/04/1980 00:00	2	4	LESS THAN 30MPH	BACK OF FOOTPATH	1500	SINGLE ARM	LIGHT GREY	RIGID COLUMN	URBIS	AXIA 2 S1	PETITJEAN	SHEET STEEL	12	PAINTED	THAMES
46101732	ASHBY ROAD	Scunthorpe	489080.94	409634.48	33	7012	00196238	01/04/1980 00:00	2	4	LESS THAN 30MPH	BACK OF FOOTPATH	1500	SINGLE ARM	LIGHT GREY	RIGID COLUMN	URBIS	AXIA 2 S1	PETITJEAN	SHEET STEEL	12	PAINTED	THAMES
46101732	ASHBY ROAD	Scunthorpe	489077.14	409614.09	34	7013	00196239	01/04/1980 00:00	2	4	LESS THAN 30MPH	BACK OF FOOTPATH	1500	SINGLE ARM	LIGHT GREY	RIGID COLUMN	URBIS	AXIA 2 S1	PETITJEAN	SHEET STEEL	12	PAINTED	THAMES
46101732	ASHBY ROAD	Scunthorpe	489074.77	409585.94	35	7014	00196240	01/04/1980 00:00	2	4	LESS THAN 30MPH	BACK OF FOOTPATH	1500	SINGLE ARM	LIGHT GREY	RIGID COLUMN	URBIS	AXIA 2 S1	PETITJEAN	SHEET STEEL	12	PAINTED	THAMES
46101732	ASHBY ROAD	Scunthorpe	489096.18	409554.2	36	7015	00196241	01/04/1980 00:00	2	4	LESS THAN 30MPH	BACK OF FOOTPATH	1500	SINGLE ARM	LIGHT GREY	RIGID COLUMN	URBIS	AXIA 2 S1	PETITJEAN	SHEET STEEL	12	PAINTED	THAMES
46101732	ASHBY ROAD	Scunthorpe	489082.64	409526	37	7016	00196242	01/04/1980 00:00	2	4	LESS THAN 30MPH	BACK OF FOOTPATH	1500	SINGLE ARM	LIGHT GREY	RIGID COLUMN	URBIS	AXIA 2 S1	PETITJEAN	SHEET STEEL	12	PAINTED	THAMES
46101732	ASHBY ROAD	Scunthorpe	489106.94	409491.13	38	7017	00196243	01/04/1980 00:00	2	4	LESS THAN 30MPH	BACK OF FOOTPATH	1500	SINGLE ARM	LIGHT GREY	RIGID COLUMN	URBIS	AXIA 2 S1	PETITJEAN	SHEET STEEL	12	PAINTED	THAMES
46101732	ASHBY ROAD	Scunthorpe	489112.51	409468.51	39	7018	00196244	01/04/1980 00:00	2	4	LESS THAN 30MPH	BACK OF FOOTPATH	1500	SINGLE ARM	LIGHT GREY	RIGID COLUMN	URBIS	AXIA 2 S1	PETITJEAN	SHEET STEEL	12	PAINTED	THAMES
46101732	ASHBY ROAD	Scunthorpe	489255.49	410609.04	3X	7046	00196272	01/04/1978 00:00	2	4	LESS THAN 30MPH	BACK OF FOOTPATH	1500	SINGLE ARM	LIGHT GREY	RIGID COLUMN	URBIS	AXIA 2 S1	PETITJEAN	SHEET STEEL	10	PAINTED	THAMES
46101732	ASHBY ROAD	Scunthorpe	489231.18	410513.08	4	7047	00196273	19/03/2024 00:00	2	4	LESS THAN 30MPH	BACK OF FOOTPATH	1000	SINGLE ARM	NOT APPLICABLE	RIGID COLUMN	URBIS	AXIA 2 S1	STANTON	TUBULAR STEEL	10	GALVANISED	TUBULAR
46101732	ASHBY ROAD	Scunthorpe	489105.67	409440.57	40	7019	00196245	01/04/1980 00:00	2	4	LESS THAN 30MPH	BACK OF FOOTPATH	1500	SINGLE ARM	LIGHT GREY	RIGID COLUMN	URBIS	AXIA 2 S1	PETITJEAN	SHEET STEEL	12	PAINTED	THAMES
46101732	ASHBY ROAD	Scunthorpe	489125.96	409410.99	41	7020	00196246	01/04/1980 00:00	2	4	LESS THAN 30MPH	BACK OF FOOTPATH	1500	SINGLE ARM	LIGHT GREY	RIGID COLUMN	URBIS	AXIA 2 S1	PETITJEAN	SHEET STEEL	12	PAINTED	THAMES
46101732	ASHBY ROAD	Scunthorpe	489121.17	409369.57	42	7021	00196247	01/04/1980 00:00	2	4	LESS THAN 30MPH	BACK OF FOOTPATH	1500	SINGLE ARM	LIGHT GREY	RIGID COLUMN	URBIS	AXIA 2 S1	PETITJEAN	SHEET STEEL	12	PAINTED	THAMES
46101732	ASHBY ROAD	Scunthorpe	489146.49	409334.7	43	7022	00196248	01/04/1980 00:00	2	4	LESS THAN 30MPH	BACK OF FOOTPATH	1500	SINGLE ARM	LIGHT GREY	RIGID COLUMN	URBIS	AXIA 2 S1	PETITJEAN	SHEET STEEL	12	PAINTED	THAMES
46101732	ASHBY ROAD	Scunthorpe	489134.9	409296.18	44	7023	00196249	01/04/1980 00:00	2	4	LESS THAN 30MPH	BACK OF FOOTPATH	1500	SINGLE ARM	LIGHT GREY	RIGID COLUMN	URBIS	AXIA 2 S1	PETITJEAN	SHEET STEEL	12	PAINTED	THAMES
46101732	ASHBY ROAD	Scunthorpe	489158.74	409256.27	45	7024	00196250	01/04/1980 00:00	2	4	LESS THAN 30MPH	BACK OF FOOTPATH	1500	SINGLE ARM	LIGHT GREY	RIGID COLUMN	URBIS	AXIA 2 S1	PETITJEAN	SHEET STEEL	12	PAINTED	THAMES
46101732	ASHBY ROAD	Scunthorpe	489145	409211.43	46	7025	00196251	01/04/1980 00:00	2	4	LESS THAN 30MPH	BACK OF FOOTPATH	1500	SINGLE ARM	LIGHT GREY	RIGID COLUMN	URBIS	AXIA 2 S1	PETITJEAN	SHEET STEEL	12	PAINTED	THAMES
46101732	ASHBY ROAD	Scunthorpe	489168.38	409177.17	47	7026	00196252	01/04/1980 00:00	2	4	LESS THAN 30MPH	BACK OF FOOTPATH	1500	SINGLE ARM	LIGHT GREY	RIGID COLUMN	URBIS	AXIA 2 S1	PETITJEAN	SHEET STEEL	12	PAINTED	THAMES
46101732	ASHBY ROAD	Scunthorpe	489154.97	409138.91	48	7027	00196253	01/04/1980 00:00	2	4	LESS THAN 30MPH	BACK OF FOOTPATH	1500	SINGLE ARM	LIGHT GREY	RIGID COLUMN	URBIS	AXIA 2 S1	PETITJEAN	SHEET STEEL	12	PAINTED	THAMES
46101732	ASHBY ROAD	Scunthorpe	489180.61	409103.42	49	7028	00196254	01/04/1980 00:00	2	4	LESS THAN 30MPH	BACK OF FOOTPATH	1500	SINGLE ARM	LIGHT GREY	RIGID COLUMN	URBIS	AXIA 2 S1	PETITJEAN	SHEET STEEL	12	PAINTED	THAMES
46101732	ASHBY ROAD	Scunthorpe	489228.78	408891.42	4A	7001	00196227	01/04/1980 00:00	2	4	LESS THAN 30MPH	SPLITTER ISLAND	1500	DOUBLE ARM	NOT APPLICABLE	RIGID COLUMN	URBIS	AXIA 2 S1	PETITJEAN	SHEET STEEL	8	GALVANISED	THAMES
46101732	ASHBY ROAD	Scunthorpe	489231.33	410588.9	4X	7048	00196274	01/04/1978 00:00	2	4	LESS THAN 30MPH	CENTRAL RESERVATION	1500	SINGLE ARM	LIGHT GREY	RIGID COLUMN	URBIS	AXIA 2 S1	PETITJEAN	SHEET STEEL	10	PAINTED	THAMES
46101732	ASHBY ROAD	Scunthorpe	489258.21	410462.25	5	7049	00196275	19/03/2024 00:00	2	4	LESS THAN 30MPH	BACK OF FOOTPATH	1000	SINGLE ARM	NOT APPLICABLE	RIGID COLUMN	URBIS	AXIA 2 S1	STANTON	TUBULAR STEEL	10	GALVANISED	TUBULAR
46101732	ASHBY ROAD	Scunthorpe	489172.75	409060.95	50	7029	00196255	01/04/1980 00:00	2	4	LESS THAN 30MPH	BACK OF FOOTPATH	1500	SINGLE ARM	LIGHT GREY	RIGID COLUMN	URBIS	AXIA 2 S1	PETITJEAN	SHEET STEEL	12	PAINTED	THAMES
46101732	ASHBY ROAD	Scunthorpe	489200.42	409027.02	51	7030	00196256	01/04/1980 00:00	2	4	LESS THAN 30MPH	BACK OF FOOTPATH	1500	SINGLE ARM	LIGHT GREY	RIGID COLUMN	URBIS	AXIA 2 S1	PETITJEAN	SHEET STEEL	12	PAINTED	THAMES
46101732	ASHBY ROAD	Scunthorpe	489195.69	408984.62	52	7031	00196257	01/04/1980 00:00	2	4	LESS THAN 30MPH	BACK OF FOOTPATH	1500	SINGLE ARM	LIGHT GREY	RIGID COLUMN	URBIS	AXIA 2 S1	PETITJEAN	SHEET STEEL	12	PAINTED	THAMES
46101732	ASHBY ROAD	Scunthorpe	489222.68	408954.36	53	7032	00196258	01/04/1980 00:00	2	4	LESS THAN 30MPH	BACK OF FOOTPATH	1500	SINGLE ARM	LIGHT GREY	RIGID COLUMN	URBIS	AXIA 2 S1	PETITJEAN	SHEET STEEL	12	PAINTED	THAMES
46101732	ASHBY ROAD	Scunthorpe	489213.26	408916.7	54	7033	00196259	01/04/1980 00:00	2	4	LESS THAN 30MPH	BACK OF FOOTPATH	1500	SINGLE ARM	LIGHT GREY	RIGID COLUMN	URBIS	AXIA 2 S1	PETITJEAN	SHEET STEEL	12	PAINTED	THAMES
46101732	ASHBY ROAD	Scunthorpe	489242.45	408880.72	55	7034	00196260	01/04/1980 00:00	2	4	LESS THAN 30MPH	BACK OF FOOTPATH	1500	SINGLE ARM	LIGHT GREY	RIGID COLUMN	URBIS	AXIA 2 S1	PETITJEAN	SHEET STEEL	12	PAINTED	THAMES
46101732	ASHBY ROAD	Scunthorpe	489224.62	408837.92	56	7035	00196261	01/04/1980 00:00	2	4	LESS THAN 30MPH	BACK OF FOOTPATH	1500	SINGLE ARM	LIGHT GREY	RIGID COLUMN	URBIS	AXIA 2 S1	PETITJEAN	SHEET STEEL	12	PAINTED	THAMES
46101732	ASHBY ROAD	Scunthorpe	489241.83	408800.48	57	7036	00196262	01/04/1980 00:00	2	4	LESS THAN 30MPH	BACK OF FOOTPATH	1500	SINGLE ARM	LIGHT GREY	RIGID COLUMN	URBIS	AXIA 2 S1	PETITJEAN	SHEET STEEL	12	PAINTED	THAMES
46101732	ASHBY ROAD	Scunthorpe	489229.02	408764.77	58	7037	00196263	01/04/1980 00:00	2	4	LESS THAN 30MPH	BACK OF FOOTPATH	1500	SINGLE ARM	LIGHT GREY	RIGID COLUMN	URBIS	AXIA 2 S1	PETITJEAN	SHEET STEEL	12	PAINTED	THAMES
46101732	ASHBY ROAD	Scunthorpe	489242.84	408727.57	59	7038	00196264	01/04/1980 00:00	2	4	LESS THAN 30MPH	BACK OF FOOTPATH	1500	SINGLE ARM	LIGHT GREY	RIGID COLUMN	URBIS	AXIA 2 S1	PETITJEAN	SHEET STEEL	12	PAINTED	THAMES
46101732	ASHBY ROAD	Scunthorpe	489200.89	410596.78	5X	7050	00196276	01/04/1978 00:00	2	4	LESS THAN 30MPH	BACK OF FOOTPATH	1500	SINGLE ARM	LIGHT GREY	RIGID COLUMN	URBIS	AXIA 2 S1	PETITJEAN	SHEET STEEL	10	PAINTED	THAMES
46101732	ASHBY ROAD	Scunthorpe	489236.12	410461.34	6	7051	00196277	19/03/2024 00:00	2	4	LESS THAN 30MPH	BACK OF FOOTPATH	1000	SINGLE ARM	NOT APPLICABLE	RIGID COLUMN	URBIS	AXIA 2 S1	STANTON	TUBULAR STEEL	10	GALVANISED	TUBULAR
46101732	ASHBY ROAD	Scunthorpe	489243.05	408701.07	60	7040	00196266	01/04/1980 00:00	2	4	LESS THAN 30MPH	BACK OF FOOTPATH	1500	SINGLE ARM	LIGHT GREY	RIGID COLUMN	URBIS	AXIA 2 S1	PETITJEAN	SHEET STEEL	12	PAINTED	THAMES
46101732	ASHBY ROAD	Scunthorpe	489229.27	408657.77	61	7039	00196265	01/04/1980 00:00	2	4	LESS THAN 30MPH	BACK OF FOOTPATH	1500	SINGLE ARM	LIGHT GREY	RIGID COLUMN	URBIS	AXIA 2 S1	PETITJEAN	SHEET STEEL	12	PAINTED	THAMES
46101732	ASHBY ROAD	Scunthorpe	489197.62	410619.67	6XFP	7052	00196278	01/04/1978 00:00	2	4	LESS THAN 30MPH	SPLITTER ISLAND	1250	SINGLE ARM	LIGHT GREY	RIGID COLUMN	URBIS	AXIA 2 S1	PETITJEAN	SHEET STEEL	10	PAINTED	THAMES
46101732	ASHBY ROAD	Scunthorpe	489254.82	410405.8	7	7053	00196279	19/03/2024 00:00	2	4	LESS THAN 30MPH	BACK OF FOOTPATH	1000	SINGLE ARM	NOT APPLICABLE	RIGID COLUMN	URBIS	AXIA 2 S1	STANTON	TUBULAR STEEL	10	GALVANISED	TUBULAR
46101732	ASHBY ROAD	Scunthorpe	489208.11	410650.47	7X	7054	00196280	01/04/1998 00:00	2	4	LESS THAN 30MPH	BACK OF FOOTPATH	1000	SINGLE ARM	NOT APPLICABLE	RIGID COLUMN	URBIS	AXIA 2 S1	PETITJEAN	SHEET STEEL	10	GALVANISED	THAMES
46101732	ASHBY ROAD	Scunthorpe	489233.92	410409.87	8	7055	00196281	19/03/2024 00:00	2	4	LESS THAN 30MPH	FRONT OF FOOTPATH	1000	SINGLE ARM	NOT APPLICABLE	RIGID COLUMN	URBIS	AXIA 2 S1	STANTON	TUBULAR STEEL	10	GALVANISED	TUBULAR
46101732	ASHBY ROAD	Scunthorpe	489182.51	410630.49	8XFP	7070	00196976	01/04/1979 00:00	6	3	LESS THAN 30MPH	BACK OF FOOTPATH	1250	SINGLE ARM	NOT APPLICABLE	RIGID COLUMN	URBIS	AXIA 2 S1	PETITJEAN	SHEET STEEL	10	PAINTED	THAMES
46101732	ASHBY ROAD	Scunthorpe	489246.59	410356.69	9	7056	00196282	19/03/2024 00:00	2	4	LESS THAN 30MPH	BACK OF FOOTPATH	1000	SINGLE ARM	NOT APPLICABLE	RIGID COLUMN	URBIS	AXIA 2 S1	STANTON	TUBULAR STEEL	10	GALVANISED	TUBULAR
46101733	ASHDOWN AVENUE	Scunthorpe	488381.69	411845.9	1	7000	00196296	01/04/1993 00:00	6	3	NOT ON A ROAD	BACK OF FOOTPATH	0	POST TOP	NOT APPLICABLE	MID HINGED	URBIS	AXIA 2 S1	PETITJEAN	SHEET STEEL	6	GALVANISED	LEVEN
46101733	ASHDOWN AVENUE	Scunthorpe	488420.13	411562.7	10	7009	00196305	01/04/1993 00:00	6	3	NOT ON A ROAD	BACK OF FOOTPATH	0	POST TOP	NOT APPLICABLE	MID HINGED	URBIS	AXIA 2 S1	PETITJEAN	SHEET STEEL	6	GALVANISED	LEVEN
46101733	ASHDOWN AVENUE	Scunthorpe	488424.54	411537.15	11	7010	00196306	01/04/1993 00:00	6	3	NOT ON A ROAD	BACK OF FOOTPATH	0	POST TOP	NOT APPLICABLE	MID HINGED	URBIS	AXIA 2 S1	PETITJEAN	SHEET STEEL	6	GALVANISED	LEVEN
46101733	ASHDOWN AVENUE	Scunthorpe	488440.24	411522.72	12	7011	00196307	01/04/2001 00:00	6	3	LESS THAN 30MPH	BACK OF FOOTPATH	0	POST TOP	NOT APPLICABLE	RIGID COLUMN	URBIS	AXIA 2 S1	MALLATITE	TUBULAR STEEL	6	GALVANISED	STEPPED TUBULAR
46101733	ASHDOWN AVENUE	Scunthorpe	488430.61	411501.71	13	7012	00196308	01/04/2001 00:00	6	3	LESS THAN 30MPH	BACK OF FOOTPATH	0	POST TOP	NOT APPLICABLE	RIGID COLUMN	URBIS	AXIA 2 S1	MALLATITE	TUBULAR STEEL	6	GALVANISED	STEPPED TUBULAR
46101733	ASHDOWN AVENUE	Scunthorpe	488435.64	411468.21	14	7013	00196309	01/04/2001 00:00	6	3	LESS THAN 30MPH	BACK OF FOOTPATH	0	POST TOP	NOT APPLICABLE	RIGID COLUMN	URBIS	AXIA 2 S1	MALLATITE	TUBULAR STEEL	6	GALVANISED	STEPPED TUBULAR
46101733	ASHDOWN AVENUE	Scunthorpe	488379.88	411804.29	2	7001	00196297	01/04/1993 00:00	6	3	NOT ON A ROAD	BACK OF FOOTPATH	0	POST TOP	NOT APPLICABLE	MID HINGED	URBIS	AXIA 2 S1	PETITJEAN	SHEET STEEL	6	GALVANISED	LEVEN
46101733	ASHDOWN AVENUE	Scunthorpe	488396.56	411766.88	3	7002	00196298	01/04/1993 00:00	6	3	NOT ON A ROAD	BACK OF FOOTPATH	0	POST TOP	NOT APPLICABLE	MID HINGED	URBIS	AXIA 2 S1	PETITJEAN	SHEET STEEL	6	GALVANISED	LEVEN
46101733	ASHDOWN AVENUE	Scunthorpe	488391.43	411733.15	4	7003	00196299	01/04/2001 00:00	6	3	LESS THAN 30MPH	BACK OF FOOTPATH	0	POST TOP	NOT APPLICABLE	RIGID COLUMN	URBIS	AXIA 2 S1	MALLATITE	TUBULAR STEEL	6	GALVANISED	STEPPED TUBULAR
46101733	ASHDOWN AVENUE	Scunthorpe	488406.4	411700.11	5	7004	00196300	01/04/2001 00:00	6	3	LESS THAN 30MPH	BACK OF FOOTPATH	0	POST TOP	NOT APPLICABLE	RIGID COLUMN	URBIS	AXIA 2 S1	MALLATITE	TUBULAR STEEL	6	GALVANISED	STEPPED TUBULAR
46101733	ASHDOWN AVENUE	Scunthorpe	488401.11	411674	6	7005	00196301	01/04/2001 00:00	6	3	LESS THAN 30MPH	BACK OF FOOTPATH	0	POST TOP	NOT APPLICABLE	RIGID COLUMN	URBIS	AXIA 2 S1	MALLATITE	TUBULAR STEEL	6	GALVANISED	STEPPED TUBULAR
46101733	ASHDOWN AVENUE	Scunthorpe	488416.1	411645.17	7	7006	00196302	01/04/2001 00:00	6	3	LESS THAN 30MPH	BACK OF FOOTPATH	0	POST TOP	NOT APPLICABLE	RIGID COLUMN	URBIS	AXIA 2 S1	MALLATITE	TUBULAR STEEL	6	GALVANISED	STEPPED TUBULAR
46101733	ASHDOWN AVENUE	Scunthorpe	488411.67	411612.89	8	7007	00196303	01/04/2001 00:00	6	3	LESS THAN 30MPH	BACK OF FOOTPATH	0	POST TOP	NOT APPLICABLE	RIGID COLUMN	URBIS	AXIA 2 S1	MALLATITE	TUBULAR STEEL	6	GALVANISED	STEPPED TUBULAR
46101733	ASHDOWN AVENUE	Scunthorpe	488428.88	411589.26	9	7008	00196304	01/04/2001 00:00	6	3	LESS THAN 30MPH	BACK OF FOOTPATH	0	POST TOP	NOT APPLICABLE	RIGID COLUMN	URBIS	AXIA 2 S1	MALLATITE	TUBULAR STEEL	6	GALVANISED	STEPPED TUBULAR
46101734	ASHTREE CLOSE	Belton Parish	478561.79	407059.44	1	7000	00196317	01/04/2003 00:00	5	3	LESS THAN 30MPH	BACK OF FOOTPATH	300	SINGLE ARM	NOT APPLICABLE	RIGID COLUMN	URBIS	AXIA 2 S1	MALLATITE	TUBULAR STEEL	6	GALVANISED	STEPPED TUBULAR
46101734	ASHTREE CLOSE	Belton Parish	478704.5	407109.65	10	7009	00196326	01/04/2003 00:00	5	3	LESS THAN 30MPH	VERGE	300	SINGLE ARM	NOT APPLICABLE	RIGID COLUMN	URBIS	AXIA 2 S1	MALLATITE	TUBULAR STEEL	6	GALVANISED	STEPPED TUBULAR
46101734	ASHTREE CLOSE	Belton Parish	478702.76	407088.26	11	7010	00196327	01/04/2003 00:00	5	3	LESS THAN 30MPH	VERGE	300	SINGLE ARM	NOT APPLICABLE	RIGID COLUMN	URBIS	AXIA 2 S1	MALLATITE	TUBULAR STEEL	6	GALVANISED	STEPPED TUBULAR
46101734	ASHTREE CLOSE	Belton Parish	478697.12	407055.73	12	7011	00196328	01/04/2003 00:00	5	3	LESS THAN 30MPH	VERGE	300	SINGLE ARM	NOT APPLICABLE	RIGID COLUMN	URBIS	AXIA 2 S1	MALLATITE	TUBULAR STEEL	6	GALVANISED	STEPPED TUBULAR
46101734	ASHTREE CLOSE	Belton Parish	478693.38	407033.37	13	7012	00196329	01/04/2003 00:00	5	3	LESS THAN 30MPH	VERGE	300	SINGLE ARM	NOT APPLICABLE	RIGID COLUMN	URBIS	AXIA 2 S1	MALLATITE	TUBULAR STEEL	6	GALVANISED	STEPPED TUBULAR
46101734	ASHTREE CLOSE	Belton Parish	478687.89	406997.55	14	7013	00196330	01/04/2003 00:00	5	3	LESS THAN 30MPH	VERGE	300	SINGLE ARM	NOT APPLICABLE	RIGID COLUMN	URBIS	AXIA 2 S1	MALLATITE	TUBULAR STEEL	6	GALVANISED	STEPPED TUBULAR
46101734	ASHTREE CLOSE	Belton Parish	478678.25	406967.94	15	7014	00196331	01/04/2003 00:00	5	3	LESS THAN 30MPH	VERGE	300	SINGLE ARM	NOT APPLICABLE	RIGID COLUMN	URBIS	AXIA 2 S1	MALLATITE	TUBULAR STEEL	6	GALVANISED	STEPPED TUBULAR
46101734	ASHTREE CLOSE	Belton Parish	478645.01	406971.43	16	7015	00196332	01/04/2003 00:00	5	3	LESS THAN 30MPH	VERGE	300	SINGLE ARM	NOT APPLICABLE	RIGID COLUMN	URBIS	AXIA 2 S1	MALLATITE	TUBULAR STEEL	6	GALVANISED	STEPPED TUBULAR
46101734	ASHTREE CLOSE	Belton Parish	478610.34	406968.47	17	7016	00196333	01/04/2003 00:00	5	3	LESS THAN 30MPH	VERGE	300	SINGLE ARM	NOT APPLICABLE	RIGID COLUMN	URBIS	AXIA 2 S1	MALLATITE	TUBULAR STEEL	6	GALVANISED	STEPPED TUBULAR
46101734	ASHTREE CLOSE	Belton Parish	478608.12	406986.84	18	7017	00196334	01/04/2003 00:00	5	3	LESS THAN 30MPH	VERGE	300	SINGLE ARM	NOT APPLICABLE	RIGID COLUMN	URBIS	AXIA 2 S1	MALLATITE	TUBULAR STEEL	6	GALVANISED	STEPPED TUBULAR
46101734	ASHTREE CLOSE	Belton Parish	478616.45	407020.06	19	7018	00196335	01/04/2003 00:00	5	3	LESS THAN 30MPH	BACK OF FOOTPATH	300	SINGLE ARM	NOT APPLICABLE	RIGID COLUMN	URBIS	AXIA 2 S1	MALLATITE	TUBULAR STEEL	6	GALVANISED	STEPPED TUBULAR
46101734	ASHTREE CLOSE	Belton Parish	478587.06	407039.33	2	7001	00196318	01/04/2003 00:00	5	3	LESS THAN 30MPH	BACK OF FOOTPATH	300	SINGLE ARM	NOT APPLICABLE	RIGID COLUMN	URBIS	AXIA 2 S1	MALLATITE	TUBULAR STEEL	6	GALVANISED	STEPPED TUBULAR
46101734	ASHTREE CLOSE	Belton Parish	478612.06	407045.78	3	7002	00196319	01/04/2003 00:00	5	3	LESS THAN 30MPH	BACK OF FOOTPATH	300	SINGLE ARM	NOT APPLICABLE	RIGID COLUMN	URBIS	AXIA 2 S1	MALLATITE	TUBULAR STEEL	6	GALVANISED	STEPPED TUBULAR
46101734	ASHTREE CLOSE	Belton Parish	478598.08	407067.29	4	7003	00196320	01/04/2003 00:00	5	3	LESS THAN 30MPH	BACK OF FOOTPATH	300	SINGLE ARM	NOT APPLICABLE	RIGID COLUMN	URBIS	AXIA 2 S1	MALLATITE	TUBULAR STEEL	6	GALVANISED	STEPPED TUBULAR
46101734	ASHTREE CLOSE	Belton Parish	478606.86	407097.25	5	7004	00196321	18/12/2024 00:00	5	3	LESS THAN 30MPH	BACK OF FOOTPATH	300	SINGLE ARM	NOT APPLICABLE	RIGID COLUMN	URBIS	AXIA 2 S1	MALLATITE	TUBULAR STEEL	6	GALVANISED	TUBULAR
46101734	ASHTREE CLOSE	Belton Parish	478615.37	407130.81	6	7005	00196322	01/04/2003 00:00	5	3	LESS THAN 30MPH	BACK OF FOOTPATH	300	SINGLE ARM	NOT APPLICABLE	RIGID COLUMN	URBIS	AXIA 2 S1	MALLATITE	TUBULAR STEEL	6	GALVANISED	STEPPED TUBULAR
46101734	ASHTREE CLOSE	Belton Parish	478622.36	407158.23	7	7006	00196323	01/04/2003 00:00	5	3	LESS THAN 30MPH	BACK OF FOOTPATH	300	SINGLE ARM	NOT APPLICABLE	RIGID COLUMN	URBIS	AXIA 2 S1	MALLATITE	TUBULAR STEEL	6	GALVANISED	STEPPED TUBULAR
46101734	ASHTREE CLOSE	Belton Parish	478634.39	407139.3	8	7007	00196324	03/03/2024 00:00	5	3	LESS THAN 30MPH	BACK OF FOOTPATH	0	POST TOP	NOT APPLICABLE	RIGID COLUMN	URBIS	AXIA 2 S1	MALLATITE	TUBULAR STEEL	6	GALVANISED	TUBULAR
46101734	ASHTREE CLOSE	Belton Parish	478670.9	407120.4	9	7008	00196325	01/04/2003 00:00	5	3	LESS THAN 30MPH	VERGE	300	SINGLE ARM	NOT APPLICABLE	RIGID COLUMN	URBIS	AXIA 2 S1	MALLATITE	TUBULAR STEEL	6	GALVANISED	STEPPED TUBULAR
46101735	ATHERTON WAY	Brigg Parish	499706.54	407455.95	1	7000	00196336	01/04/1993 00:00	2	3	LESS THAN 30MPH	BACK OF FOOTPATH	1250	SINGLE ARM	MID GREY	RIGID COLUMN	URBIS	AXIA 2 S1	PETITJEAN	SHEET STEEL	10	PAINTED	THAMES
46101735	ATHERTON WAY	Brigg Parish	499607.43	407631.16	10	7009	00196345	23/03/2022 00:00	2	3	LESS THAN 30MPH	BACK OF FOOTPATH	1000	SINGLE ARM	NOT APPLICABLE	RIGID COLUMN	URBIS	AXIA 2 S1	MALLATITE	TUBULAR STEEL	8	GALVANISED	TUBULAR
46101735	ATHERTON WAY	Brigg Parish	499616.65

46101742	BATTLE GREEN	Epworth Parish	477774.27	404134.15	3	7002	00196485	01/04/1985 00:00	5	3	LESS THAN 30MPH	BACK OF FOOTPATH	300	SINGLE ARM	NOT APPLICABLE	RIGID COLUMN	URBIS	AXIA 2 S1	PETITJEAN	SHEET STEEL	5	GALVANISED	DAER
46101742	BATTLE GREEN	Epworth Parish	477740.13	404145.98	4	7003	00196486	24/11/2018 00:00	5	3	LESS THAN 30MPH	ON POLE	300	SINGLE ARM	DARK GREY	POLE MOUNTED	URBIS	AXIA 2 S1	WOODEN PO	WOOD	5	PAINTED	PUDSEY DIAMOND
46101742	BATTLE GREEN	Epworth Parish	477714.47	404126.11	5	7004	00196487	12/12/2018 00:00	5	3	LESS THAN 30MPH	BACK OF FOOTPATH	0	POST TOP	NOT APPLICABLE	RIGID COLUMN	URBIS	AXIA 2 S1	MALLATITE	TUBULAR STEEL	6	GALVANISED	TUBULAR
46101742	BATTLE GREEN	Epworth Parish	477701.03	404098.96	6	7005	00196488	24/11/2018 00:00	5	3	LESS THAN 30MPH	ON POLE	300	SINGLE ARM	DARK GREY	POLE MOUNTED	URBIS	AXIA 2 S1	WOODEN PO	WOOD	5	PAINTED	PUDSEY DIAMOND
46101742	BATTLE GREEN	Epworth Parish	477663.43	404106.43	7	7006	00196489	01/04/1965 00:00	5	3	LESS THAN 30MPH	ON POLE	800	SINGLE ARM	NOT APPLICABLE	POLE MOUNTED	URBIS	AXIA 2 S1	WOODEN PO	WOOD	5	NOT APPLICABI	Not Applicable
46101742	BATTLE GREEN	Epworth Parish	477634.66	404112.62	8	7007	00196490	01/04/1980 00:00	5	3	LESS THAN 30MPH	ON POLE	300	SINGLE ARM	NOT APPLICABLE	POLE MOUNTED	URBIS	AXIA 2 S1	WOODEN PO	WOOD	5	NOT APPLICABI	Not Applicable
46101742	BATTLE GREEN	Epworth Parish	477592.34	404124.78	9	7008	00196491	24/11/2018 00:00	5	3	LESS THAN 30MPH	ON POLE	300	SINGLE ARM	DARK GREY	POLE MOUNTED	URBIS	AXIA 2 S1	WOODEN PO	WOOD	5	PAINTED	PUDSEY DIAMOND
46101743	BAYSDALE ROAD	Scunthorpe	490784.6	408202.11	1	7000	00196502	01/04/2001 00:00	1	3	LESS THAN 30MPH	FRONT OF FOOTPATH	300	SINGLE ARM	NOT APPLICABLE	RIGID COLUMN	URBIS	AXIA 2 S1	MALLATITE	TUBULAR STEEL	6	GALVANISED	STEPPED TUBULAR
46101743	BAYSDALE ROAD	Scunthorpe	490831.29	408082.92	10	7009	00196511	01/04/2001 00:00	1	3	LESS THAN 30MPH	BACK OF FOOTPATH	300	SINGLE ARM	NOT APPLICABLE	RIGID COLUMN	URBIS	AXIA 2 S1	MALLATITE	TUBULAR STEEL	6	GALVANISED	STEPPED TUBULAR
46101743	BAYSDALE ROAD	Scunthorpe	490856.2	408066.96	11	7010	00196512	01/04/2001 00:00	1	3	LESS THAN 30MPH	BACK OF FOOTPATH	300	SINGLE ARM	NOT APPLICABLE	RIGID COLUMN	URBIS	AXIA 2 S1	MALLATITE	TUBULAR STEEL	6	GALVANISED	STEPPED TUBULAR
46101743	BAYSDALE ROAD	Scunthorpe	490886.68	408080.26	12	7011	00196513	01/04/2001 00:00	1	3	LESS THAN 30MPH	BACK OF FOOTPATH	300	SINGLE ARM	NOT APPLICABLE	RIGID COLUMN	URBIS	AXIA 2 S1	MALLATITE	TUBULAR STEEL	6	GALVANISED	STEPPED TUBULAR
46101743	BAYSDALE ROAD	Scunthorpe	490917.77	408071.14	13	7012	00196514	01/04/2001 00:00	1	3	LESS THAN 30MPH	BACK OF FOOTPATH	300	SINGLE ARM	NOT APPLICABLE	RIGID COLUMN	URBIS	AXIA 2 S1	MALLATITE	TUBULAR STEEL	6	GALVANISED	STEPPED TUBULAR
46101743	BAYSDALE ROAD	Scunthorpe	490946.19	408083.93	14	7013	00196515	01/04/2001 00:00	1	3	LESS THAN 30MPH	BACK OF FOOTPATH	300	SINGLE ARM	NOT APPLICABLE	RIGID COLUMN	URBIS	AXIA 2 S1	MALLATITE	TUBULAR STEEL	6	GALVANISED	STEPPED TUBULAR
46101743	BAYSDALE ROAD	Scunthorpe	490977.4	408074.68	15	7014	00196516	01/04/2001 00:00	1	3	LESS THAN 30MPH	BACK OF FOOTPATH	300	SINGLE ARM	NOT APPLICABLE	RIGID COLUMN	URBIS	AXIA 2 S1	MALLATITE	TUBULAR STEEL	6	GALVANISED	STEPPED TUBULAR
46101743	BAYSDALE ROAD	Scunthorpe	491006.2	408088.13	16	7015	00196517	01/04/2001 00:00	1	3	LESS THAN 30MPH	BACK OF FOOTPATH	300	SINGLE ARM	NOT APPLICABLE	RIGID COLUMN	URBIS	AXIA 2 S1	MALLATITE	TUBULAR STEEL	6	GALVANISED	STEPPED TUBULAR
46101743	BAYSDALE ROAD	Scunthorpe	491030.13	408077.92	17	7016	00196518	01/04/2001 00:00	1	3	LESS THAN 30MPH	BACK OF FOOTPATH	300	SINGLE ARM	NOT APPLICABLE	RIGID COLUMN	URBIS	AXIA 2 S1	MALLATITE	TUBULAR STEEL	6	GALVANISED	STEPPED TUBULAR
46101743	BAYSDALE ROAD	Scunthorpe	491035.21	408101.33	18	7017	00196519	01/04/2001 00:00	1	3	LESS THAN 30MPH	BACK OF FOOTPATH	300	SINGLE ARM	NOT APPLICABLE	RIGID COLUMN	URBIS	AXIA 2 S1	MALLATITE	TUBULAR STEEL	6	GALVANISED	STEPPED TUBULAR
46101743	BAYSDALE ROAD	Scunthorpe	491062.74	408082.53	19	7018	00196520	01/04/2001 00:00	1	3	LESS THAN 30MPH	BACK OF FOOTPATH	300	SINGLE ARM	NOT APPLICABLE	RIGID COLUMN	URBIS	AXIA 2 S1	MALLATITE	TUBULAR STEEL	6	GALVANISED	STEPPED TUBULAR
46101743	BAYSDALE ROAD	Scunthorpe	490778.5	408170.57	2	7001	00196503	01/04/2001 00:00	1	3	LESS THAN 30MPH	BACK OF FOOTPATH	300	SINGLE ARM	NOT APPLICABLE	RIGID COLUMN	URBIS	AXIA 2 S1	MALLATITE	TUBULAR STEEL	6	GALVANISED	STEPPED TUBULAR
46101743	BAYSDALE ROAD	Scunthorpe	491073.17	408102.89	20	7019	00196521	01/04/2001 00:00	1	3	LESS THAN 30MPH	BACK OF FOOTPATH	300	SINGLE ARM	NOT APPLICABLE	RIGID COLUMN	URBIS	AXIA 2 S1	MALLATITE	TUBULAR STEEL	6	GALVANISED	STEPPED TUBULAR
46101743	BAYSDALE ROAD	Scunthorpe	491054.34	408126.3	21	7020	00196522	01/04/2001 00:00	1	3	LESS THAN 30MPH	BACK OF FOOTPATH	300	SINGLE ARM	NOT APPLICABLE	RIGID COLUMN	URBIS	AXIA 2 S1	MALLATITE	TUBULAR STEEL	6	GALVANISED	STEPPED TUBULAR
46101743	BAYSDALE ROAD	Scunthorpe	491071.13	408140.8	22	7021	00196523	01/04/2001 00:00	1	3	LESS THAN 30MPH	BACK OF FOOTPATH	300	SINGLE ARM	NOT APPLICABLE	RIGID COLUMN	URBIS	AXIA 2 S1	MALLATITE	TUBULAR STEEL	6	GALVANISED	STEPPED TUBULAR
46101743	BAYSDALE ROAD	Scunthorpe	491058.52	408166.45	23	7022	00196524	01/04/2001 00:00	1	3	LESS THAN 30MPH	BACK OF FOOTPATH	300	SINGLE ARM	NOT APPLICABLE	RIGID COLUMN	URBIS	AXIA 2 S1	MALLATITE	TUBULAR STEEL	6	GALVANISED	STEPPED TUBULAR
46101743	BAYSDALE ROAD	Scunthorpe	491067.29	408196.74	24	7023	00196525	01/04/2001 00:00	1	3	LESS THAN 30MPH	BACK OF FOOTPATH	300	SINGLE ARM	NOT APPLICABLE	RIGID COLUMN	URBIS	AXIA 2 S1	MALLATITE	TUBULAR STEEL	6	GALVANISED	STEPPED TUBULAR
46101743	BAYSDALE ROAD	Scunthorpe	491055.17	408220.74	25	7024	00196526	01/04/2001 00:00	1	3	LESS THAN 30MPH	BACK OF FOOTPATH	300	SINGLE ARM	NOT APPLICABLE	RIGID COLUMN	URBIS	AXIA 2 S1	MALLATITE	TUBULAR STEEL	6	GALVANISED	STEPPED TUBULAR
46101743	BAYSDALE ROAD	Scunthorpe	491064.56	408252.26	26	7025	00196527	01/04/2001 00:00	1	3	LESS THAN 30MPH	BACK OF FOOTPATH	300	SINGLE ARM	NOT APPLICABLE	RIGID COLUMN	URBIS	AXIA 2 S1	MALLATITE	TUBULAR STEEL	6	GALVANISED	STEPPED TUBULAR
46101743	BAYSDALE ROAD	Scunthorpe	491052.23	408277.05	27	7026	00196528	01/04/2001 00:00	1	3	LESS THAN 30MPH	BACK OF FOOTPATH	300	SINGLE ARM	NOT APPLICABLE	RIGID COLUMN	URBIS	AXIA 2 S1	MALLATITE	TUBULAR STEEL	6	GALVANISED	STEPPED TUBULAR
46101743	BAYSDALE ROAD	Scunthorpe	490779.55	408145.4	3	7002	00196504	01/04/2001 00:00	1	3	LESS THAN 30MPH	BACK OF FOOTPATH	300	SINGLE ARM	NOT APPLICABLE	RIGID COLUMN	URBIS	AXIA 2 S1	MALLATITE	TUBULAR STEEL	6	GALVANISED	STEPPED TUBULAR
46101743	BAYSDALE ROAD	Scunthorpe	490781.37	408120.72	4	7003	00196505	01/04/2001 00:00	1	3	LESS THAN 30MPH	BACK OF FOOTPATH	300	SINGLE ARM	NOT APPLICABLE	RIGID COLUMN	URBIS	AXIA 2 S1	MALLATITE	TUBULAR STEEL	6	GALVANISED	STEPPED TUBULAR
46101743	BAYSDALE ROAD	Scunthorpe	490783.85	408082.06	5	7004	00196506	01/04/2001 00:00	1	3	LESS THAN 30MPH	BACK OF FOOTPATH	300	SINGLE ARM	NOT APPLICABLE	RIGID COLUMN	URBIS	AXIA 2 S1	MALLATITE	TUBULAR STEEL	6	GALVANISED	STEPPED TUBULAR
46101743	BAYSDALE ROAD	Scunthorpe	490762.99	408068.84	6	7005	00196507	01/04/2001 00:00	1	3	LESS THAN 30MPH	BACK OF FOOTPATH	300	SINGLE ARM	NOT APPLICABLE	RIGID COLUMN	URBIS	AXIA 2 S1	MALLATITE	TUBULAR STEEL	6	GALVANISED	STEPPED TUBULAR
46101743	BAYSDALE ROAD	Scunthorpe	490785.63	408062.73	7	7006	00196508	01/04/2001 00:00	1	3	LESS THAN 30MPH	BACK OF FOOTPATH	300	SINGLE ARM	NOT APPLICABLE	RIGID COLUMN	URBIS	AXIA 2 S1	MALLATITE	TUBULAR STEEL	6	GALVANISED	STEPPED TUBULAR
46101743	BAYSDALE ROAD	Scunthorpe	490805.54	408101.97	8	7007	00196509	01/04/2001 00:00	1	3	LESS THAN 30MPH	BACK OF FOOTPATH	300	SINGLE ARM	NOT APPLICABLE	RIGID COLUMN	URBIS	AXIA 2 S1	MALLATITE	TUBULAR STEEL	6	GALVANISED	STEPPED TUBULAR
46101743	BAYSDALE ROAD	Scunthorpe	490818.62	408065.03	9	7008	00196510	01/04/2001 00:00	1	3	LESS THAN 30MPH	BACK OF FOOTPATH	300	SINGLE ARM	NOT APPLICABLE	RIGID COLUMN	URBIS	AXIA 2 S1	MALLATITE	TUBULAR STEEL	6	GALVANISED	STEPPED TUBULAR
46101744	BECK LANE	Barrow upon Humber Parish	507536.46	421222.18	1	7000	00196529	07/11/2021 00:00	4	1	LESS THAN 30MPH	ON POLE	300	SINGLE ARM	NOT APPLICABLE	POLE MOUNTED	URBIS	AXIA 2 S1	WOODEN PO	WOOD	5	NOT APPLICABI	PUDSEY DIAMOND
46101744	BECK LANE	Barrow upon Humber Parish	507382.1	421535.52	10	7009	00196538	01/04/1973 00:00	4	1	LESS THAN 30MPH	BACK OF FOOTPATH	800	SINGLE ARM	MID GREY	RIGID COLUMN	URBIS	AXIA 2 S1	PETITJEAN	SHEET STEEL	6	PAINTED	DAER
46101744	BECK LANE	Barrow upon Humber Parish	507374.87	421561.3	11	7010	00196539	01/04/1973 00:00	4	1	LESS THAN 30MPH	BACK OF FOOTPATH	800	SINGLE ARM	MID GREY	RIGID COLUMN	URBIS	AXIA 2 S1	PETITJEAN	SHEET STEEL	5	GALVANISED	DAER
46101744	BECK LANE	Barrow upon Humber Parish	507361.61	421592.32	12	7011	00196540	01/10/2009 00:00	4	1	LESS THAN 30MPH	FRONT OF FOOTPATH	0	POST TOP	NOT APPLICABLE	RIGID COLUMN	URBIS	AXIA 2 S1	MALLATITE	TUBULAR STEEL	6	GALVANISED	TUBULAR
46101744	BECK LANE	Barrow upon Humber Parish	507511.63	421259.94	2	7001	00196530	17/04/2018 00:00	4	1	LESS THAN 30MPH	ON POLE	300	SINGLE ARM	NOT APPLICABLE	POLE MOUNTED	URBIS	AXIA 2 S1	WOODEN PO	WOOD	5	NOT APPLICABI	PUDSEY DIAMOND
46101744	BECK LANE	Barrow upon Humber Parish	507494.67	421298.51	3	7002	00196531	01/04/2018 00:00	4	1	LESS THAN 30MPH	ON POLE	300	SINGLE ARM	NOT APPLICABLE	POLE MOUNTED	URBIS	AXIA 2 S1	WOODEN PO	WOOD	5	NOT APPLICABI	PUDSEY DIAMOND
46101744	BECK LANE	Barrow upon Humber Parish	507483.77	421344.01	4	7003	00196532	17/04/2018 00:00	4	1	LESS THAN 30MPH	ON POLE	300	SINGLE ARM	NOT APPLICABLE	POLE MOUNTED	URBIS	AXIA 2 S1	WOODEN PO	WOOD	5	NOT APPLICABI	PUDSEY DIAMOND
46101744	BECK LANE	Barrow upon Humber Parish	507459.18	421385.39	5	7004	00196533	17/04/2018 00:00	4	1	LESS THAN 30MPH	ON POLE	300	SINGLE ARM	NOT APPLICABLE	POLE MOUNTED	URBIS	AXIA 2 S1	WOODEN PO	WOOD	5	NOT APPLICABI	PUDSEY DIAMOND
46101744	BECK LANE	Barrow upon Humber Parish	507437.55	421410.12	6	7005	00196534	17/04/2018 00:00	4	1	LESS THAN 30MPH	ON POLE	300	SINGLE ARM	NOT APPLICABLE	POLE MOUNTED	URBIS	AXIA 2 S1	WOODEN PO	WOOD	5	NOT APPLICABI	PUDSEY DIAMOND
46101744	BECK LANE	Barrow upon Humber Parish	507395.38	421434.57	7	7006	00196535	01/04/1973 00:00	4	1	LESS THAN 30MPH	BACK OF FOOTPATH	800	SINGLE ARM	MID GREY	RIGID COLUMN	URBIS	AXIA 2 S1	PETITJEAN	SHEET STEEL	5	PAINTED	DAER
46101744	BECK LANE	Barrow upon Humber Parish	507378.81	421469.54	8	7007	00196536	02/02/2019 00:00	4	1	LESS THAN 30MPH	SPLITTER ISLAND	800	TRIPLE ARM	NOT APPLICABLE	RIGID COLUMN	URBIS	AXIA 2 S1	MALLATITE	STEEL	8	GALVANISED	MALLATITE
46101744	BECK LANE	Barrow upon Humber Parish	507373.24	421502.95	9	7008	00196537	01/04/1973 00:00	4	1	LESS THAN 30MPH	BACK OF FOOTPATH	500	SINGLE ARM	NOT APPLICABLE	RIGID COLUMN	URBIS	AXIA 2 S1	PETITJEAN	SHEET STEEL	5	GALVANISED	DAER
46101745	BEDALE ROAD	Scunthorpe	490924.58	408218.8	1	7000	00196541	01/04/2001 00:00	1	3	LESS THAN 30MPH	BACK OF FOOTPATH	300	SINGLE ARM	NOT APPLICABLE	RIGID COLUMN	URBIS	AXIA 2 S1	MALLATITE	TUBULAR STEEL	6	GALVANISED	STEPPED TUBULAR
46101745	BEDALE ROAD	Scunthorpe	490917.79	408181.2	2	7001	00196542	01/04/2001 00:00	1	3	LESS THAN 30MPH	BACK OF FOOTPATH	300	SINGLE ARM	NOT APPLICABLE	RIGID COLUMN	URBIS	AXIA 2 S1	MALLATITE	TUBULAR STEEL	6	GALVANISED	STEPPED TUBULAR
46101745	BEDALE ROAD	Scunthorpe	490925.25	408146.55	3	7002	00196543	01/04/2001 00:00	1	3	LESS THAN 30MPH	SPLITTER ISLAND	300	SINGLE ARM	NOT APPLICABLE	RIGID COLUMN	URBIS	AXIA 2 S1	MALLATITE	TUBULAR STEEL	6	GALVANISED	STEPPED TUBULAR
46101745	BEDALE ROAD	Scunthorpe	490931.98	408118.98	4	7003	00196544	01/04/2001 00:00	1	3	LESS THAN 30MPH	BACK OF FOOTPATH	300	SINGLE ARM	NOT APPLICABLE	RIGID COLUMN	URBIS	AXIA 2 S1	MALLATITE	TUBULAR STEEL	6	GALVANISED	STEPPED TUBULAR
46101745	BEDALE ROAD	Scunthorpe	490923.34	408089.29	5	7004	00196545	01/04/2001 00:00	1	3	LESS THAN 30MPH	BACK OF FOOTPATH	300	SINGLE ARM	NOT APPLICABLE	RIGID COLUMN	URBIS	AXIA 2 S1	MALLATITE	TUBULAR STEEL	6	GALVANISED	STEPPED TUBULAR
46101746	BEECHWAY	Scunthorpe	489833.93	409259.91	1	7000	00196546	01/04/2001 00:00	2	4	LESS THAN 30MPH	BACK OF FOOTPATH	300	SINGLE ARM	NOT APPLICABLE	RIGID COLUMN	URBIS	AXIA 2 S1	MALLATITE	TUBULAR STEEL	6	GALVANISED	STEPPED TUBULAR
46101746	BEECHWAY	Scunthorpe	489723.89	409246.7	10	7009	00196555	01/04/2001 00:00	2	4	LESS THAN 30MPH	BACK OF FOOTPATH	300	SINGLE ARM	NOT APPLICABLE	RIGID COLUMN	URBIS	AXIA 2 S1	MALLATITE	TUBULAR STEEL	6	GALVANISED	STEPPED TUBULAR
46101746	BEECHWAY	Scunthorpe	489695.01	409283.12	11	7010	00196556	01/04/2001 00:00	2	4	LESS THAN 30MPH	BACK OF FOOTPATH	300	SINGLE ARM	NOT APPLICABLE	RIGID COLUMN	URBIS	AXIA 2 S1	MALLATITE	TUBULAR STEEL	6	GALVANISED	STEPPED TUBULAR
46101746	BEECHWAY	Scunthorpe	489694.34	409246.02	12	7011	00196557	01/04/2001 00:00	2	4	LESS THAN 30MPH	BACK OF FOOTPATH	300	SINGLE ARM	NOT APPLICABLE	RIGID COLUMN	URBIS	AXIA 2 S1	MALLATITE	TUBULAR STEEL	6	GALVANISED	STEPPED TUBULAR
46101746	BEECHWAY	Scunthorpe	489820.26	409285.05	2	7001	00196547	01/04/2001 00:00	2	4	LESS THAN 30MPH	BACK OF FOOTPATH	300	SINGLE ARM	NOT APPLICABLE	RIGID COLUMN	URBIS	AXIA 2 S1	MALLATITE	TUBULAR STEEL	6	GALVANISED	STEPPED TUBULAR
46101746	BEECHWAY	Scunthorpe	489804.39	409274.31	3	7002	00196548	01/04/2001 00:00	2	4	LESS THAN 30MPH	BACK OF FOOTPATH	300	SINGLE ARM	NOT APPLICABLE	RIGID COLUMN	URBIS	AXIA 2 S1	MALLATITE	TUBULAR STEEL	6	GALVANISED	STEPPED TUBULAR
46101746	BEECHWAY	Scunthorpe	489804.46	409248.64	4	7003	00196549	01/04/2001 00:00	2	4	LESS THAN 30MPH	BACK OF FOOTPATH	300	SINGLE ARM	NOT APPLICABLE	RIGID COLUMN	URBIS	AXIA 2 S1	MALLATITE	TUBULAR STEEL	6	GALVANISED	STEPPED TUBULAR
46101746	BEECHWAY	Scunthorpe	489775.41	409284.44	5	7004	00196550	01/04/2001 00:00	2	4	LESS THAN 30MPH	BACK OF FOOTPATH	300	SINGLE ARM	NOT APPLICABLE	RIGID COLUMN	URBIS	AXIA 2 S1	MALLATITE	TUBULAR STEEL	6	GALVANISED	STEPPED TUBULAR
46101746	BEECHWAY	Scunthorpe	489778.99	409248	6	7005	00196551	01/04/2001 00:00	2	4	LESS THAN 30MPH	BACK OF FOOTPATH	300	SINGLE ARM	NOT APPLICABLE	RIGID COLUMN	URBIS	AXIA 2 S1	MALLATITE	TUBULAR STEEL	6	GALVANISED	STEPPED TUBULAR
46101746	BEECHWAY	Scunthorpe	489747.12	409284.15	7	7006	00196552	01/04/2001 00:00	2	4	LESS THAN 30MPH	BACK OF FOOTPATH	300	SINGLE ARM	NOT APPLICABLE	RIGID COLUMN	URBIS	AXIA 2 S1	MALLATITE	TUBULAR STEEL	6	GALVANISED	STEPPED TUBULAR
46101746	BEECHWAY	Scunthorpe	489749.4	409247.73	8	7007	00196553	01/04/2001 00:00	2	4	LESS THAN 30MPH	BACK OF FOOTPATH	300	SINGLE ARM	NOT APPLICABLE	RIGID COLUMN	URBIS	AXIA 2 S1	MALLATITE	TUBULAR STEEL	6	GALVANISED	STEPPED TUBULAR
46101746	BEECHWAY	Scunthorpe	489718.72	409283.6	9	7008	00196554	01/04/2001 00:00	2	4	LESS THAN 30MPH	BACK OF FOOTPATH	300	SINGLE ARM	NOT APPLICABLE	RIGID COLUMN	URBIS	AXIA 2 S1	MALLATITE	TUBULAR STEEL	6	GALVANISED	STEPPED TUBULAR
46101747	BELLWIN DRIVE	Flixborough Parish	486286.03	414356.8	1	7000	00196559	01/04/1977 00:00	2	1	LESS THAN 30MPH	VERGE	300	MULTI FLOO	NOT APPLICABLE	LOWERED CRADLE	GEC-SIEMENS	Z3430	PETITJEAN	SHEET STEEL	25	GALVANISED	CONTINENTAL
46101747	BELLWIN DRIVE	Flixborough Parish	486288.25	414419.36	1	7001	00196560	01/04/1977 00:00	2	1	LESS THAN 30MPH	BACK OF FOOTPATH	1000	SINGLE ARM	DARK GREY	RIGID COLUMN	URBIS	AXIA 2 S1	PETITJEAN	SHEET STEEL	8	PAINTED	THAMES
46101747	BELLWIN DRIVE	Flixborough Parish	486246.99	414449.58	2	7002	00196561	01/04/1977 00:00	2	1	LESS THAN 30MPH	VERGE	300	MULTI FLOO	NOT APPLICABLE	LOWERED CRADLE	GEC-SIEMENS	Z3430	PETITJEAN	SHEET STEEL	25	GALVANISED	CONTINENTAL
46101747	BELLWIN DRIVE	Flixborough Parish	486313.19	414426.59	2	7003	00196562	01/04/1977 00:00	2	1	LESS THAN 30MPH	BACK OF FOOTPATH	1000	SINGLE ARM	DARK GREY	RIGID COLUMN	URBIS	AXIA 2 S1	PETITJEAN	SHEET STEEL	8	PAINTED	THAMES
46101747	BELLWIN DRIVE	Flixborough Parish	486202.84	414555.07	3	7004	00196563	01/04/1977 00:00	2	1	LESS THAN 30MPH	VERGE	300	MULTI FLOO	NOT APPLICABLE	LOWERED CRADLE	GEC-SIEMENS	Z3430	PETITJEAN	SHEET STEEL	25	GALVANISED	CONTINENTAL
46101748	BELWOOD DRIVE	Belton Parish	478913.86	407094.42	1	7000	00196564	01/04/1989 00:00	5	3	LESS THAN 30MPH	BACK OF FOOTPATH	0	POST TOP	NOT APPLICABLE	RIGID COLUMN	URBIS	AXIA 2 S1	MALLATITE	TUBULAR STEEL	5	GALVANISED	STEPPED TUBULAR
46101748	BELWOOD DRIVE	Belton Parish	478889.13	407087.49	2	7001	00196565	01/04/1989 00:00	5	3	LESS THAN 30MPH	BACK OF FOOTPATH	0	POST TOP	NOT APPLICABLE	RIGID COLUMN	URBIS	AXIA 2 S1	MALLATITE	TUBULAR STEEL	5	GALVANISED	STEPPED TUBULAR
46101748	BELWOOD DRIVE	Belton Parish	478863.55	407090.45	3	7002	00196566	01/04/1989 00:00	5	3	LESS THAN 30MPH	BACK OF FOOTPATH	0	POST TOP	NOT APPLICABLE	RIGID COLUMN	URBIS	AXIA 2 S1	MALLATITE	TUBULAR STEEL	5	GALVANISED	STEPPED TUBULAR
46101748	BELWOOD DRIVE	Belton Parish	478842.09	407081	4	7003	00196567	01/04/1993 00:00	5	3	LESS THAN 30MPH	BACK OF FOOTPATH	0	POST TOP	NOT APPLICABLE	RIGID COLUMN	URBIS	AXIA 2 S1	MALLATITE	TUBULAR STEEL	5	GALVANISED	STEPPED TUBULAR
46101748	BELWOOD DRIVE	Belton Parish	478813.54	407092.48	5	7004	00196568	01/04/1993 00:00	5	3	LESS THAN 30MPH	BACK OF FOOTPATH	0	POST TOP	NOT APPLICABLE	RIGID COLUMN	URBIS	AXIA 2 S1	MALLATITE	TUBULAR STEEL	5	GALVANISED	STEPPED TUBULAR
46101748	BELWOOD DRIVE	Belton Parish	478791.83	407094.59	6	7005	00196569	01/04/1993 00:00	5	3	LESS THAN 30MPH	BACK OF FOOTPATH	0	POST TOP	NOT APPLICABLE	RIGID COLUMN	URBIS	AXIA 2 S1	MALLATITE	TUBULAR STEEL	5	GALVANISED	STEPPED TUBULAR
46101748	BELWOOD DRIVE	Belton Parish	478769.3	407082.49	7	7006	00196570	01/04/1993 00:00	5	3	LESS THAN 30MPH	BACK OF FOOTPATH	0	POST TOP	NOT APPLICABLE	RIGID COLUMN	URBIS	AXIA 2 S1	MALLATITE	TUBULAR STEEL	5	GALVANISED	STEPPED TUBULAR
46101748	BELWOOD DRIVE	Belton Parish	478737.45	407053.72	8	7007	00196571	01/04/1993 00:00	5	3	LESS THAN 30MPH	BACK OF FOOTPATH	0	POST TOP	NOT APPLICABLE	RIGID COLUMN	URBIS	AXIA 2 S1	MALLATITE	TUBULAR STEEL	5	GALVANISED	STEPPED TUBULAR
46101748	BELWOOD DRIVE	Belton Parish	478740.74	407036.66	9	7008	00196572	01/04/1999 00:00	5	3	LESS THAN 30MPH	BACK OF FOOTPATH	0	POST TOP	NOT APPLICABLE	RIGID COLUMN	URBIS	AXIA 2 S1	MALLATITE	TUBULAR STEEL	5	GALVANISED	STEPPED TUBULAR
46101749	BERETUN GREEN	Barton upon Humber Parish	502922.71	421851.28	1	7000	00196573	01/04/1993 00:00	5	2	LESS THAN 30MPH	BACK OF FOOTPATH	300	SINGLE ARM	NOT APPLICABLE	RIGID COLUMN	URBIS	AXIA 2 S1	PETITJEAN	SHEET STEEL	5	GALVANISED	DAER
46101749	BERETUN GREEN	Barton upon Humber Parish	503062.64	421822.2	10	7009	00196582	01/04/1995 00:00	5	2	NOT ON A ROAD	BACK OF FOOTPATH	0	POST TOP	NOT APPLICABLE	MID HINGED	URBIS	AXIA 2 S1	PETITJEAN	SHEET STEEL	6	GALVANISED	LEVEN
46101749	BERETUN GREEN	Barton upon Humber Parish	502926.83	421830.69	2	7001	00196574	01/04/1993 00:00	5	2	LESS THAN 30MPH	BACK OF FOOTPATH	300	SINGLE ARM	NOT APPLICABLE	RIGID COLUMN	URBIS	AXIA 2 S1	PETITJEAN	SHEET STEEL	5	GALVANISED	DAER
46101749	BERETUN GREEN	Barton upon Humber Parish	502954.59	421828.59	3	7002	00196575	12/06/2019 00:00	5	2	LESS THAN 30MPH	BACK OF FOOTPATH	0	POST TOP	NOT APPLICABLE	RIGID COLUMN	URBIS	AXIA 2 S1	MALLATITE	TUBULAR STEEL	6	GALVANISED	TUBULAR
46101749	BERETUN GREEN	Barton upon Humber Parish	502989.7	421824.26	4	7003	00196576	01/04/1995 00:00	5	2	LESS THAN 30MPH	BACK OF FOOTPATH	300	SINGLE ARM	MID GREY	RIGID COLUMN	URBIS	AXIA 2 S1	PETITJEAN	SHEET STEEL	5	PAINTED	DAER
46101749	BERETUN GREEN	Barton upon Humber Parish	502992.42	421836.77	5	7004	00196577	01/04/2008 00:00	5	2	NOT ON A ROAD	BACK OF FOOTPATH	0	POST TOP	NOT APPLICABLE	MID HINGED	URBIS	PILZEO 16 LED 3.19 KLM	PETITJEAN	SHEET STEEL	5	NOT APPLICABI	LEVEN
46101749	BERETUN GREEN	Barton upon Humber Parish	502980.69	421856.55	6	7005	00196578	01/04/2008 00:00	5	2	NOT ON A ROAD	BACK OF FOOTPATH	0	POST TOP	NOT APPLICABLE	MID HINGED	URBIS	PILZEO 16 LED 3.19 KLM	PETITJEAN	SHEET STEEL	5	NOT APPLICABI	LEVEN
46101749	BERETUN GREEN	Barton upon Humber Parish	503010.77	421814.81

46101761	BRIGG ROAD	Scunthorpe	491316.23	409716.68	102FP	7101	00196852	18/03/2022 00:00	4	4	BETWEEN 30-50 MPH	VERGE	1000	SINGLE ARM	NOT APPLICABLE	RIGID COLUMN	URBIS	AXIA 2 S1	MALLATITE	TUBULAR STEEL	10	GALVANISED	TUBULAR
46101761	BRIGG ROAD	Scunthorpe	491344.57	409689.85	103	7102	00196853	18/03/2022 00:00	4	4	BETWEEN 30-50 MPH	BACK OF FOOTPATH	1000	SINGLE ARM	NOT APPLICABLE	RIGID COLUMN	URBIS	AXIA 2 S1	MALLATITE	TUBULAR STEEL	10	GALVANISED	TUBULAR
46101761	BRIGG ROAD	Scunthorpe	491353.27	409658.06	104	7103	00196854	18/03/2022 00:00	4	4	BETWEEN 30-50 MPH	VERGE	1000	SINGLE ARM	NOT APPLICABLE	RIGID COLUMN	URBIS	AXIA 2 S1	MALLATITE	TUBULAR STEEL	10	GALVANISED	TUBULAR
46101761	BRIGG ROAD	Scunthorpe	491367.03	409634.29	105	7104	00196855	18/03/2022 00:00	4	4	BETWEEN 30-50 MPH	VERGE	1000	SINGLE ARM	NOT APPLICABLE	RIGID COLUMN	URBIS	AXIA 2 S1	MALLATITE	TUBULAR STEEL	10	GALVANISED	TUBULAR
46101761	BRIGG ROAD	Scunthorpe	491390.09	409618.04	106	7105	00196856	18/03/2022 00:00	4	4	BETWEEN 30-50 MPH	BACK OF FOOTPATH	1000	SINGLE ARM	NOT APPLICABLE	RIGID COLUMN	URBIS	AXIA 2 S1	MALLATITE	TUBULAR STEEL	10	GALVANISED	TUBULAR
46101761	BRIGG ROAD	Scunthorpe	491398.36	409584.02	107	7106	00196857	18/03/2022 00:00	4	4	BETWEEN 30-50 MPH	VERGE	1000	SINGLE ARM	NOT APPLICABLE	RIGID COLUMN	URBIS	AXIA 2 S1	MALLATITE	TUBULAR STEEL	10	GALVANISED	TUBULAR
46101761	BRIGG ROAD	Scunthorpe	491418.43	409551.72	108	7107	00196858	18/03/2022 00:00	4	4	BETWEEN 30-50 MPH	VERGE	1000	SINGLE ARM	NOT APPLICABLE	RIGID COLUMN	URBIS	AXIA 2 S1	MALLATITE	TUBULAR STEEL	10	GALVANISED	TUBULAR
46101761	BRIGG ROAD	Scunthorpe	491435.88	409523.47	109	7108	00196859	18/03/2022 00:00	4	4	BETWEEN 30-50 MPH	VERGE	1000	SINGLE ARM	NOT APPLICABLE	RIGID COLUMN	URBIS	AXIA 2 S1	MALLATITE	TUBULAR STEEL	10	GALVANISED	TUBULAR
46101761	BRIGG ROAD	Scunthorpe	490040.16	411555.89	11	7010	00196761	01/04/1980 00:00	4	4	BETWEEN 30-50 MPH	VERGE	1250	SINGLE ARM	NOT APPLICABLE	RIGID COLUMN	URBIS	AXIA 2 S1	PETITJEAN	SHEET STEEL	10	GALVANISED	THAMES
46101761	BRIGG ROAD	Scunthorpe	491451.82	409495.43	110	7109	00196860	18/03/2022 00:00	4	4	BETWEEN 30-50 MPH	VERGE	1000	SINGLE ARM	NOT APPLICABLE	RIGID COLUMN	URBIS	AXIA 2 S1	MALLATITE	TUBULAR STEEL	10	GALVANISED	TUBULAR
46101761	BRIGG ROAD	Scunthorpe	491465.59	409467.37	111	7110	00196861	18/03/2022 00:00	4	4	BETWEEN 30-50 MPH	VERGE	1000	SINGLE ARM	NOT APPLICABLE	RIGID COLUMN	URBIS	AXIA 2 S1	MALLATITE	TUBULAR STEEL	10	GALVANISED	TUBULAR
46101761	BRIGG ROAD	Scunthorpe	491479.93	409429.84	112	7111	00196862	18/03/2022 00:00	4	4	BETWEEN 30-50 MPH	VERGE	1000	SINGLE ARM	NOT APPLICABLE	RIGID COLUMN	URBIS	AXIA 2 S1	MALLATITE	TUBULAR STEEL	10	GALVANISED	TUBULAR
46101761	BRIGG ROAD	Scunthorpe	491504.68	409403.07	113	7112	00196863	18/03/2022 00:00	4	4	BETWEEN 30-50 MPH	BACK OF FOOTPATH	1000	SINGLE ARM	NOT APPLICABLE	RIGID COLUMN	URBIS	AXIA 2 S1	MALLATITE	TUBULAR STEEL	10	GALVANISED	TUBULAR
46101761	BRIGG ROAD	Scunthorpe	491515.56	409378.84	114	7113	00196864	18/03/2022 00:00	4	4	BETWEEN 30-50 MPH	BACK OF FOOTPATH	1000	SINGLE ARM	NOT APPLICABLE	RIGID COLUMN	URBIS	AXIA 2 S1	MALLATITE	TUBULAR STEEL	10	GALVANISED	TUBULAR
46101761	BRIGG ROAD	Scunthorpe	491518.93	409343.14	115	7114	00196865	18/03/2022 00:00	4	4	BETWEEN 30-50 MPH	VERGE	1000	SINGLE ARM	NOT APPLICABLE	RIGID COLUMN	URBIS	AXIA 2 S1	MALLATITE	TUBULAR STEEL	10	GALVANISED	TUBULAR
46101761	BRIGG ROAD	Scunthorpe	491542.56	409312.52	116	7115	00196866	18/03/2022 00:00	4	4	BETWEEN 30-50 MPH	VERGE	1000	SINGLE ARM	NOT APPLICABLE	RIGID COLUMN	URBIS	AXIA 2 S1	MALLATITE	TUBULAR STEEL	10	GALVANISED	TUBULAR
46101761	BRIGG ROAD	Scunthorpe	491556.55	409281.15	117	7116	00196867	18/03/2022 00:00	4	4	BETWEEN 30-50 MPH	VERGE	1000	SINGLE ARM	NOT APPLICABLE	RIGID COLUMN	URBIS	AXIA 2 S1	MALLATITE	TUBULAR STEEL	10	GALVANISED	TUBULAR
46101761	BRIGG ROAD	Scunthorpe	491555.39	409248.81	118	7117	00196868	01/04/1980 00:00	4	4	BETWEEN 30-50 MPH	BACK OF FOOTPATH	1250	SINGLE ARM	NOT APPLICABLE	RIGID COLUMN	URBIS	AXIA 2 S1	PETITJEAN	SHEET STEEL	10	GALVANISED	THAMES
46101761	BRIGG ROAD	Scunthorpe	491569.92	409215.71	119FP	7118	00196869	01/04/2016 00:00	4	4	BETWEEN 30-50 MPH	BACK OF FOOTPATH	1000	SINGLE ARM	NOT APPLICABLE	RIGID COLUMN	URBIS	AXIA 2 S1	VALMONT ST	SHEET STEEL	8	GALVANISED	THAMES
46101761	BRIGG ROAD	Scunthorpe	489938.84	411763.4	11A	7000	00196751	01/04/1980 00:00	4	4	LESS THAN 30MPH	SPLITTER ISLAND	800	DOUBLE ARM	NOT APPLICABLE	RIGID COLUMN	URBIS	AXIA 2 S1	PETITJEAN	SHEET STEEL	8	GALVANISED	THAMES
46101761	BRIGG ROAD	Scunthorpe	490039.85	411514.42	12	7011	00196762	01/04/2010 00:00	4	4	BETWEEN 30-50 MPH	VERGE	1000	SINGLE ARM	NOT APPLICABLE	RIGID COLUMN	URBIS	AXIA 2 S1	VALMONT ST	SHEET STEEL	10	GALVANISED	THAMES
46101761	BRIGG ROAD	Scunthorpe	491583.67	409183.94	120	7119	00196870	01/04/1980 00:00	4	4	BETWEEN 30-50 MPH	BACK OF FOOTPATH	1250	SINGLE ARM	NOT APPLICABLE	RIGID COLUMN	URBIS	AXIA 2 S1	PETITJEAN	SHEET STEEL	10	GALVANISED	THAMES
46101761	BRIGG ROAD	Scunthorpe	491610.97	409119.56	122	7121	00196872	01/04/1980 00:00	4	4	BETWEEN 30-50 MPH	BACK OF FOOTPATH	1250	SINGLE ARM	NOT APPLICABLE	RIGID COLUMN	URBIS	AXIA 2 S1	PETITJEAN	SHEET STEEL	10	GALVANISED	THAMES
46101761	BRIGG ROAD	Scunthorpe	491622.52	409091.49	123	7122	00196873	01/04/1980 00:00	4	4	BETWEEN 30-50 MPH	BACK OF FOOTPATH	1250	SINGLE ARM	NOT APPLICABLE	RIGID COLUMN	URBIS	AXIA 2 S1	PETITJEAN	SHEET STEEL	10	GALVANISED	THAMES
46101761	BRIGG ROAD	Scunthorpe	491649.4	409068.77	124	7123	00196874	18/03/2022 00:00	4	4	BETWEEN 30-50 MPH	BACK OF FOOTPATH	1000	SINGLE ARM	NOT APPLICABLE	RIGID COLUMN	URBIS	AXIA 2 S1	MALLATITE	TUBULAR STEEL	10	GALVANISED	TUBULAR
46101761	BRIGG ROAD	Scunthorpe	491662.18	409034.22	125	7124	00196875	18/03/2022 00:00	4	4	BETWEEN 30-50 MPH	BACK OF FOOTPATH	1000	SINGLE ARM	NOT APPLICABLE	RIGID COLUMN	URBIS	AXIA 2 S1	MALLATITE	TUBULAR STEEL	10	GALVANISED	TUBULAR
46101761	BRIGG ROAD	Scunthorpe	491662.18	408999.44	126	7125	00196876	01/04/1980 00:00	4	4	BETWEEN 30-50 MPH	BACK OF FOOTPATH	1250	SINGLE ARM	NOT APPLICABLE	RIGID COLUMN	URBIS	AXIA 2 S1	PETITJEAN	SHEET STEEL	10	GALVANISED	THAMES
46101761	BRIGG ROAD	Scunthorpe	491685.81	408973.24	127	7126	00196877	18/03/2022 00:00	4	4	BETWEEN 30-50 MPH	VERGE	1000	SINGLE ARM	NOT APPLICABLE	RIGID COLUMN	URBIS	AXIA 2 S1	MALLATITE	TUBULAR STEEL	10	GALVANISED	TUBULAR
46101761	BRIGG ROAD	Scunthorpe	491680.43	408940.47	128	7127	00196878	01/04/1980 00:00	4	4	BETWEEN 30-50 MPH	BACK OF FOOTPATH	1250	SINGLE ARM	NOT APPLICABLE	RIGID COLUMN	URBIS	AXIA 2 S1	PETITJEAN	SHEET STEEL	10	GALVANISED	THAMES
46101761	BRIGG ROAD	Scunthorpe	491703.87	408931.78	129	7128	00196879	18/03/2022 00:00	4	4	BETWEEN 30-50 MPH	VERGE	1000	SINGLE ARM	NOT APPLICABLE	RIGID COLUMN	URBIS	AXIA 2 S1	MALLATITE	TUBULAR STEEL	10	GALVANISED	TUBULAR
46101761	BRIGG ROAD	Scunthorpe	490056.85	411502.95	13	7012	00196763	01/04/2006 00:00	4	4	BETWEEN 30-50 MPH	VERGE	1000	SINGLE ARM	NOT APPLICABLE	RIGID COLUMN	URBIS	AXIA 2 S1	VALMONT ST	SHEET STEEL	10	GALVANISED	THAMES
46101761	BRIGG ROAD	Scunthorpe	491712.56	408910.24	130	7129	00196880	09/11/2022 00:00	4	4	BETWEEN 30-50 MPH	VERGE	1000	SINGLE ARM	NOT APPLICABLE	RIGID COLUMN	URBIS	AXIA 2 S1	MALLATITE	TUBULAR STEEL	10	GALVANISED	TUBULAR
46101761	BRIGG ROAD	Scunthorpe	491727.17	408875.57	131	7130	00196881	28/08/2024 00:00	4	4	BETWEEN 30-50 MPH	BACK OF FOOTPATH	1250	SINGLE ARM	NOT APPLICABLE	RIGID COLUMN	URBIS	AXIA 2 S1	MALLATITE	TUBULAR STEEL	10	GALVANISED	TUBULAR
46101761	BRIGG ROAD	Scunthorpe	491738.09	408850.91	132	7131	00196882	18/03/2022 00:00	4	4	BETWEEN 30-50 MPH	VERGE	1000	SINGLE ARM	NOT APPLICABLE	RIGID COLUMN	URBIS	AXIA 2 S1	MALLATITE	TUBULAR STEEL	10	GALVANISED	TUBULAR
46101761	BRIGG ROAD	Scunthorpe	491750.34	408817.26	133	7132	00196883	18/03/2022 00:00	4	4	BETWEEN 30-50 MPH	VERGE	1000	SINGLE ARM	NOT APPLICABLE	RIGID COLUMN	URBIS	AXIA 2 S1	MALLATITE	TUBULAR STEEL	10	GALVANISED	TUBULAR
46101761	BRIGG ROAD	Scunthorpe	491757.75	408788.45	134	7133	00196884	01/04/1980 00:00	4	4	BETWEEN 30-50 MPH	VERGE	1250	SINGLE ARM	NOT APPLICABLE	RIGID COLUMN	URBIS	AXIA 2 S1	PETITJEAN	SHEET STEEL	10	GALVANISED	THAMES
46101761	BRIGG ROAD	Scunthorpe	491760.64	408760.36	135	7134	00196885	18/03/2022 00:00	4	4	BETWEEN 30-50 MPH	VERGE	1000	SINGLE ARM	NOT APPLICABLE	RIGID COLUMN	URBIS	AXIA 2 S1	MALLATITE	TUBULAR STEEL	10	GALVANISED	TUBULAR
46101761	BRIGG ROAD	Scunthorpe	491765.82	408726.84	137	7136	00196887	01/04/2015 00:00	4	4	BETWEEN 30-50 MPH	VERGE	1000	SINGLE ARM	NOT APPLICABLE	RIGID COLUMN	PHILIPS	LUMA 2 15 KLM 100 LED	VALMONT ST	SHEET STEEL	10	GALVANISED	THAMES
46101761	BRIGG ROAD	Scunthorpe	491739.79	408697.27	138	7137	00196888	01/04/1980 00:00	4	4	BETWEEN 30-50 MPH	VERGE	1250	SINGLE ARM	NOT APPLICABLE	RIGID COLUMN	URBIS	AXIA 2 S1	PETITJEAN	SHEET STEEL	10	GALVANISED	THAMES
46101761	BRIGG ROAD	Scunthorpe	491764.15	408693.53	139	7138	00196889	01/04/2015 00:00	4	4	BETWEEN 30-50 MPH	VERGE	1000	SINGLE ARM	NOT APPLICABLE	RIGID COLUMN	PHILIPS	LUMA 2 15 KLM 100 LED	VALMONT ST	SHEET STEEL	12	GALVANISED	THAMES
46101761	BRIGG ROAD	Scunthorpe	490066.51	411469.38	14FP	7013	00196764	01/04/1980 00:00	4	4	BETWEEN 30-50 MPH	FRONT OF FOOTPATH	1250	SINGLE ARM	NOT APPLICABLE	RIGID COLUMN	URBIS	AXIA 2 S1	PETITJEAN	SHEET STEEL	10	GALVANISED	THAMES
46101761	BRIGG ROAD	Scunthorpe	490066.93	411435.49	15	7014	00196765	25/01/2024 00:00	4	4	BETWEEN 30-50 MPH	FRONT OF FOOTPATH	1000	SINGLE ARM	NOT APPLICABLE	RIGID COLUMN	URBIS	AXIA 2 S1	MALLATITE	TUBULAR STEEL	10	GALVANISED	TUBULAR
46101761	BRIGG ROAD	Scunthorpe	490088.64	411405.46	16	7015	00196766	01/04/2010 00:00	4	4	BETWEEN 30-50 MPH	BACK OF FOOTPATH	1000	SINGLE ARM	NOT APPLICABLE	RIGID COLUMN	URBIS	AXIA 2 S1	VALMONT ST	SHEET STEEL	10	GALVANISED	THAMES
46101761	BRIGG ROAD	Scunthorpe	490085.82	411355.63	17	7016	00196767	01/04/2010 00:00	4	4	BETWEEN 30-50 MPH	BACK OF FOOTPATH	1000	SINGLE ARM	NOT APPLICABLE	RIGID COLUMN	URBIS	AXIA 2 S1	VALMONT ST	SHEET STEEL	10	GALVANISED	THAMES
46101761	BRIGG ROAD	Scunthorpe	490105.59	411328.42	18	7017	00196768	01/04/1997 00:00	4	4	BETWEEN 30-50 MPH	BACK OF FOOTPATH	1000	SINGLE ARM	NOT APPLICABLE	RIGID COLUMN	URBIS	AXIA 2 S1	PETITJEAN	SHEET STEEL	10	GALVANISED	THAMES
46101761	BRIGG ROAD	Scunthorpe	490101.43	411287.54	19	7018	00196769	01/04/1997 00:00	4	4	BETWEEN 30-50 MPH	BACK OF FOOTPATH	1000	SINGLE ARM	NOT APPLICABLE	RIGID COLUMN	URBIS	AXIA 2 S1	PETITJEAN	SHEET STEEL	10	GALVANISED	THAMES
46101761	BRIGG ROAD	Scunthorpe	489965.02	411753.62	2	7001	00196752	01/04/1980 00:00	4	4	BETWEEN 30-50 MPH	VERGE	1250	SINGLE ARM	NOT APPLICABLE	RIGID COLUMN	URBIS	AXIA 2 S1	PETITJEAN	SHEET STEEL	10	GALVANISED	THAMES
46101761	BRIGG ROAD	Scunthorpe	490121.82	411278.83	20	7019	00196770	01/04/1997 00:00	4	4	BETWEEN 30-50 MPH	BACK OF FOOTPATH	1000	SINGLE ARM	NOT APPLICABLE	RIGID COLUMN	URBIS	AXIA 2 S1	PETITJEAN	SHEET STEEL	10	GALVANISED	THAMES
46101761	BRIGG ROAD	Scunthorpe	490112.88	411249.93	21	7020	00196771	01/04/1997 00:00	4	4	BETWEEN 30-50 MPH	SPLITTER ISLAND	1000	DOUBLE ARM	NOT APPLICABLE	RIGID COLUMN	URBIS	AXIA 2 S1	PETITJEAN	SHEET STEEL	10	GALVANISED	THAMES
46101761	BRIGG ROAD	Scunthorpe	490132.7	411249.02	22	7021	00196772	01/04/1997 00:00	4	4	BETWEEN 30-50 MPH	BACK OF FOOTPATH	1000	SINGLE ARM	NOT APPLICABLE	RIGID COLUMN	URBIS	AXIA 2 S1	PETITJEAN	SHEET STEEL	10	GALVANISED	THAMES
46101761	BRIGG ROAD	Scunthorpe	490127.44	411214.7	23	7022	00196773	01/04/1997 00:00	4	4	BETWEEN 30-50 MPH	BACK OF FOOTPATH	1000	SINGLE ARM	NOT APPLICABLE	RIGID COLUMN	URBIS	AXIA 2 S1	PETITJEAN	SHEET STEEL	10	GALVANISED	THAMES
46101761	BRIGG ROAD	Scunthorpe	490148.23	411186.89	24	7023	00196774	01/04/1997 00:00	4	4	BETWEEN 30-50 MPH	BACK OF FOOTPATH	1000	SINGLE ARM	NOT APPLICABLE	RIGID COLUMN	URBIS	AXIA 2 S1	PETITJEAN	SHEET STEEL	10	GALVANISED	THAMES
46101761	BRIGG ROAD	Scunthorpe	490169.5	411159.99	25	7024	00196775	01/04/1997 00:00	4	4	BETWEEN 30-50 MPH	BACK OF FOOTPATH	1000	SINGLE ARM	NOT APPLICABLE	RIGID COLUMN	URBIS	AXIA 2 S1	PETITJEAN	SHEET STEEL	10	GALVANISED	THAMES
46101761	BRIGG ROAD	Scunthorpe	490187.73	411140.39	26	7025	00196776	01/04/1997 00:00	4	4	BETWEEN 30-50 MPH	BACK OF FOOTPATH	1000	SINGLE ARM	NOT APPLICABLE	RIGID COLUMN	URBIS	AXIA 2 S1	PETITJEAN	SHEET STEEL	10	GALVANISED	THAMES
46101761	BRIGG ROAD	Scunthorpe	490209.89	411121.91	27	7026	00196777	01/04/1997 00:00	4	4	BETWEEN 30-50 MPH	BACK OF FOOTPATH	1000	SINGLE ARM	NOT APPLICABLE	RIGID COLUMN	URBIS	AXIA 2 S1	PETITJEAN	SHEET STEEL	10	GALVANISED	THAMES
46101761	BRIGG ROAD	Scunthorpe	490234.02	411104.44	28	7027	00196778	01/04/1997 00:00	4	4	BETWEEN 30-50 MPH	BACK OF FOOTPATH	1000	SINGLE ARM	NOT APPLICABLE	RIGID COLUMN	URBIS	AXIA 2 S1	PETITJEAN	SHEET STEEL	10	GALVANISED	THAMES
46101761	BRIGG ROAD	Scunthorpe	490261.59	411085.99	29	7028	00196779	01/04/1997 00:00	4	4	BETWEEN 30-50 MPH	BACK OF FOOTPATH	1000	SINGLE ARM	NOT APPLICABLE	RIGID COLUMN	URBIS	AXIA 2 S1	PETITJEAN	SHEET STEEL	8	PAINTED	THAMES
46101761	BRIGG ROAD	Scunthorpe	489955.73	411741.6	3	7002	00196753	01/04/2012 00:00	4	4	BETWEEN 30-50 MPH	VERGE	1000	SINGLE ARM	NOT APPLICABLE	RIGID COLUMN	URBIS	AXIA 2 S1	VALMONT ST	SHEET STEEL	10	GALVANISED	THAMES
46101761	BRIGG ROAD	Scunthorpe	490297.73	411075.17	30	7029	00196780	01/04/1997 00:00	4	4	BETWEEN 30-50 MPH	FRONT OF FOOTPATH	500	SINGLE ARM	LIGHT GREY	RIGID COLUMN	URBIS	AXIA 2 S1	PETITJEAN	SHEET STEEL	8	PAINTED	THAMES
46101761	BRIGG ROAD	Scunthorpe	490312.18	411052.81	31	7030	00196781	01/04/1997 00:00	4	4	BETWEEN 30-50 MPH	FRONT OF FOOTPATH	500	SINGLE ARM	LIGHT GREY	RIGID COLUMN	URBIS	AXIA 2 S1	PETITJEAN	SHEET STEEL	8	PAINTED	THAMES
46101761	BRIGG ROAD	Scunthorpe	490338.11	411033.43	32	7031	00196782	01/04/1997 00:00	4	4	BETWEEN 30-50 MPH	BACK OF FOOTPATH	1000	SINGLE ARM	NOT APPLICABLE	RIGID COLUMN	URBIS	AXIA 2 S1	PETITJEAN	SHEET STEEL	10	GALVANISED	THAMES
46101761	BRIGG ROAD	Scunthorpe	490374.13	411025.59	33	7032	00196783	01/04/1997 00:00	4	4	BETWEEN 30-50 MPH	BACK OF FOOTPATH	1000	SINGLE ARM	NOT APPLICABLE	RIGID COLUMN	URBIS	AXIA 2 S1	PETITJEAN	SHEET STEEL	10	GALVANISED	THAMES
46101761	BRIGG ROAD	Scunthorpe	490394.76	410994.29	34	7033	00196784	01/04/1997 00:00	4	4	BETWEEN 30-50 MPH	BACK OF FOOTPATH	1000	SINGLE ARM	NOT APPLICABLE	RIGID COLUMN	URBIS	AXIA 2 S1	PETITJEAN	SHEET STEEL	10	GALVANISED	THAMES
46101761	BRIGG ROAD	Scunthorpe	490418.15	410994.63	35	7034	00196785	01/04/1997 00:00	4	4	BETWEEN 30-50 MPH	BACK OF FOOTPATH	1000	SINGLE ARM	NOT APPLICABLE	RIGID COLUMN	URBIS	AXIA 2 S1	PETITJEAN	SHEET STEEL	10	GALVANISED	THAMES
46101761	BRIGG ROAD	Scunthorpe	490443.23	410965.13	36	7035	00196786	01/04/1997 00:00	4	4	BETWEEN 30-50 MPH	BACK OF FOOTPATH	1000	SINGLE ARM	NOT APPLICABLE	RIGID COLUMN	URBIS	AXIA 2 S1	PETITJEAN	SHEET STEEL	10	GALVANISED	THAMES
46101761	BRIGG ROAD	Scunthorpe	490470.84	410951.51	37	7036	00196787	01/04/1997 00:00	4	4	BETWEEN 30-50 MPH	BACK OF FOOTPATH	1000	SINGLE ARM	NOT APPLICABLE	RIGID COLUMN	URBIS	AXIA 2 S1	PETITJEAN	SHEET STEEL	10	GALVANISED	THAMES
46101761	BRIGG ROAD	Scunthorpe	490502.48	410938.78	38	7037	00196788	01/04/1997 00:00	4	4	BETWEEN 30-50 MPH	BACK OF FOOTPATH	1000	SINGLE ARM	NOT APPLICABLE	RIGID COLUMN	URBIS	AXIA 2 S1	PETITJEAN	SHEET STEEL	10	GALVANISED	THAMES
46101761	BRIGG ROAD	Scunthorpe	490534.37	410928.54	39	7038	00196789	01/04/1997 00:00	4	4	BETWEEN 30-50 MPH	BACK OF FOOTPATH	1000	SINGLE ARM	NOT APPLICABLE	RIGID COLUMN	URBIS	AXIA 2 S1	PETITJEAN	SHEET STEEL	10	GALVANISED	THAMES
46101761	BRIGG ROAD	Scunthorpe	489970.48	411720.84	4	7003	00196754	01/04/1980 00:00	4	4	BETWEEN 30-50 MPH	VERGE	1250	SINGLE ARM	NOT APPLICABLE	RIGID COLUMN	URBIS	AXIA 2 S1	PETITJEAN	SHEET STEEL	10	GALVANISED	THAMES
46101761	BRIGG ROAD	Scunthorpe	490560.98	410938.08	40	7039	00196790	01/04/1997 00:00	4	4	BETWEEN 30-50 MPH	BACK OF FOOTPATH	1000	SINGLE ARM	NOT APPLICABLE	RIGID COLUMN	URBIS	AXIA 2 S1	PETITJEAN	SHEET STEEL	10	GALVANISED	THAMES
46101761	BRIGG ROAD	Scunthorpe	490574.9	410915.54	41	7040	00196791	01/04/1997 00:00	4	4	BETWEEN 30-50 MPH	BACK OF FOOTPATH	1000	SINGLE ARM	NOT APPLICABLE	RIGID COLUMN	URBIS	AXIA 2 S1	PETITJEAN	SHEET STEEL	10	GALVANISED	THAMES
46101761	BRIGG ROAD	Scunthorpe	490597.36	410930.31	42	7041	00196792	01/04/1997 00:00	4	4	BETWEEN 30-50 MPH	BACK OF FOOTPATH	1000	SINGLE ARM	NOT APPLICABLE	RIGID COLUMN	URBIS	AXIA 2 S1	PETITJEAN	SHEET STEEL	10	GALVANISED	THAMES
46101761	BRIGG ROAD	Scunthorpe	490614.22	410903.14	43	7042	00196793	01/04/1997 00:00	4	4	BETWEEN 30-50 MPH	BACK OF FOOTPATH	1000	SINGLE ARM	NOT APPLICABLE	RIGID COLUMN	URBIS	AXIA 2 S1	PETITJEAN	SHEET STEEL	10	GALVANISED	THAMES
46101761	BRIGG ROAD	Scunthorpe	490629.7	410933.06	44	7043	00196794	01/04/1997 00:00	4	4	BETWEEN 30-50 MPH	BACK OF FOOTPATH	1000	SINGLE ARM	NOT APPLICABLE	RIGID COLUMN	URBIS	AXIA 2 S1	PETITJEAN	SHEET STEEL	10	GALVANISED	THAMES
46101761	BRIGG ROAD	Scunthorpe	490647.58	410915.87	45	7044	00196795	01/04/1997 00:00	4	4	BETWEEN 30-50 MPH	SPLITTER ISLAND	1000	DOUBLE ARM	NOT APPLICABLE	RIGID COLUMN	URBIS	AXIA 2 S1	PETITJEAN	SHEET STEEL	10	GALVANISED	THAMES
46101761	BRIGG ROAD	Scunthorpe	490644.83	410889.72	46	7045	00196796	01/04/1997 00:00	4	4	BETWEEN 30-50 MPH	BACK OF FOOTPATH	1000	SINGLE ARM	NOT APPLICABLE	RIGID COLUMN	URBIS	AXIA 2 S1	PETITJEAN	SHEET STEEL	10	GALVANISED	THAMES
46101761	BRIGG ROAD	Scunthorpe	490666.48	410873.24	47	7046	00196797	01/04/1992 00:00	4	4	BETWEEN 30-50 MPH	BACK OF FOOTPATH	1250	SINGLE ARM	NOT APPLICABLE	RIGID COLUMN	URBIS	AXIA 2 S1	PETITJEAN	SHEET STEEL	10	GALVANISED	THAMES
46101761	BRIGG ROAD	Scunthorpe	490684.36	410887.69	48	7047	00196798	22/07/2024 00:00	4	4	BETWEEN 30-50 MPH	BACK OF FOOTPATH	1250	SINGLE ARM	NOT APPLICABLE	RIGID COLUMN	URBIS	AXIA 2 S1	MALLATITE	TUBULAR STEEL	10	GALVANISED	TUBULAR
46101761	BRIGG ROAD	Scunthorpe	490699.5	410867.39	49	7048	00196799	01/04/1992 00:00	4	4	BETWEEN 30-50 MPH	BACK OF FOOTPATH	1250	SINGLE ARM	NOT APPLICABLE	RIGID COLUMN	URBIS	AXIA 2 S1	PETITJEAN	SHEET STEEL	10	GALVANISED	THAMES
46101761	BRIGG ROAD	Scunthorpe	489983.59	411722.48	5	7004	00196755	13/09/2019 00:00	4	4	BETWEEN 30-50 MPH	VERGE	1000	SINGLE ARM	NOT APPLICABLE	RIGID COLUMN	URBIS	AXIA 2 S1	MALLATITE	TUBULAR STEEL	10	GALVANISED	TUBULAR
46101761	BRIGG ROAD	Scunthorpe	490683.67	410855.01	50	7049	00196800	01/04/1992 00:00	4	4	BETWEEN 30-50 MPH	BACK OF FOOTPATH	1250	SINGLE ARM	NOT APPLICABLE	RIGID COLUMN	URBIS	AXIA 2 S1	PETITJEAN	SHEET STEEL	10	GALVANISED	THAMES
46101761	BRIGG ROAD	Scunthorpe	490696.74	410837.12	51	7050	00196801	01/04/1992 00:00	4	4	BETWEEN 30-50 MPH	BACK OF FOOTPATH	1250	SINGLE ARM	NOT APPLICABLE	RIGID COLUMN	URBIS	AXIA 2 S1	PETITJEAN	SHEET STEEL	10	GALVANISED	THAMES
46101761	BRIGG ROAD	Scunthorpe	490713.94	410849.16	52	7051	00196802	01/04/1992 00:00	4	4	BETWEEN 30-50 MPH	BACK OF FOOTPATH	1250	SINGLE ARM	NOT APPLICABLE	RIGID COLUMN	URBIS	AXIA 2 S1	PETITJEAN	SHEET STEEL	10	GALVANISED	THAMES
46101761	BRIGG ROAD	Scunthorpe	490727.01	410830.93	53	7052	00196803	01/04/1992 00:00	4	4	BETWEEN 30-50 MPH	BACK OF FOOTPATH	1250	SINGLE ARM	NOT APPLICABLE	RIGID COLUMN	URBIS	AXIA 2 S1	PETITJEAN	SHEET STEEL	10	GALVANISED	THAMES
46101761	BRIGG ROAD	Scunthorpe	490710.16	410819.58	54	7053	00196804	01/04/1992 00:00	4	4	BETWEEN 30-50 MPH	BACK OF FOOTPATH	1250	SINGLE ARM	NOT APPLICABLE	RIGID COLUMN	URBIS	AXIA 2 S1	PETITJEAN	SHEET STEEL	10	GALVANISED	THAMES
46101761	BRIGG ROAD	Scunthorpe	490724.95	410800.66	55	7054	00196805	01/04/1992 00:00	4	4	BETWEE

46101766	BRUMBY WOOD LANE	Scunthorpe	487756.49	410581.68	7	7006	00196959	01/04/2010 00:00	5	2	BETWEEN 30-50 MPH	VERGE	500	SINGLE ARM	NOT APPLICABLE	RIGID COLUMN	URBIS	AXIA 2 S1	VALMONT ST	SHEET STEEL	8	GALVANISED	THAMES
46101766	BRUMBY WOOD LANE	Scunthorpe	487720.97	410583.55	8	7007	00196960	08/06/2021 00:00	5	2	BETWEEN 30-50 MPH	VERGE	500	SINGLE ARM	NOT APPLICABLE	RIGID COLUMN	URBIS	AXIA 2 S1	MALLATITE	TUBULAR STEEL	8	GALVANISED	TUBULAR
46101766	BRUMBY WOOD LANE	Scunthorpe	488930.29	410596.6	9	7032	00196985	01/04/2012 00:00	6	3	LESS THAN 30MPH	FRONT OF FOOTPATH	1000	SINGLE ARM	NOT APPLICABLE	RIGID COLUMN	URBIS	AXIA 2 S1	VALMONT ST	SHEET STEEL	8	GALVANISED	THAMES
46101766	BRUMBY WOOD LANE	Scunthorpe	487692.56	410570.7	9	7008	00196961	01/04/2012 00:00	5	2	BETWEEN 30-50 MPH	VERGE	1000	SINGLE ARM	NOT APPLICABLE	RIGID COLUMN	URBIS	AXIA 2 S1	VALMONT ST	SHEET STEEL	8	GALVANISED	THAMES
46101768	CAISTOR AVENUE	Bottesford Parish	489755.77	407648.77	1	7000	00197012	28/06/2019 00:00	3	1	LESS THAN 30MPH	VERGE	0	POST TOP	NOT APPLICABLE	RIGID COLUMN	URBIS	AXIA 2 S1	MALLATITE	TUBULAR STEEL	6	GALVANISED	TUBULAR
46101768	CAISTOR AVENUE	Bottesford Parish	490004.65	407687.95	10	7009	00197021	28/06/2019 00:00	3	1	LESS THAN 30MPH	VERGE	0	POST TOP	NOT APPLICABLE	RIGID COLUMN	URBIS	AXIA 2 S1	MALLATITE	TUBULAR STEEL	6	GALVANISED	TUBULAR
46101768	CAISTOR AVENUE	Bottesford Parish	490032.36	407690.4	11	7010	00197022	28/06/2019 00:00	3	1	LESS THAN 30MPH	VERGE	0	POST TOP	NOT APPLICABLE	RIGID COLUMN	URBIS	AXIA 2 S1	MALLATITE	TUBULAR STEEL	6	GALVANISED	TUBULAR
46101768	CAISTOR AVENUE	Bottesford Parish	490034.24	407661.28	12	7011	00197023	01/04/1980 00:00	3	1	LESS THAN 30MPH	VERGE	0	POST TOP	NOT APPLICABLE	RIGID COLUMN	URBIS	AXIA 2 S1	PETITJEAN	SHEET STEEL	5	GALVANISED	NIDD
46101768	CAISTOR AVENUE	Bottesford Parish	490036.83	407627.64	13	7012	00197024	28/06/2019 00:00	3	1	LESS THAN 30MPH	VERGE	0	POST TOP	NOT APPLICABLE	RIGID COLUMN	URBIS	AXIA 2 S1	MALLATITE	TUBULAR STEEL	6	GALVANISED	TUBULAR
46101768	CAISTOR AVENUE	Bottesford Parish	490024.19	407601.74	14	7013	00197025	28/06/2019 00:00	3	1	LESS THAN 30MPH	VERGE	0	POST TOP	NOT APPLICABLE	RIGID COLUMN	URBIS	AXIA 2 S1	MALLATITE	TUBULAR STEEL	6	GALVANISED	TUBULAR
46101768	CAISTOR AVENUE	Bottesford Parish	490032.25	407585.82	15	7014	00197026	01/04/2012 00:00	3	1	LESS THAN 30MPH	BACK OF FOOTPATH	0	POST TOP	NOT APPLICABLE	RIGID COLUMN	URBIS	AXIA 2 S1	MALLATITE	TUBULAR STEEL	6	GALVANISED	TUBULAR
46101768	CAISTOR AVENUE	Bottesford Parish	489777.54	407643.66	2	7001	00197013	28/06/2019 00:00	3	1	LESS THAN 30MPH	VERGE	0	POST TOP	NOT APPLICABLE	RIGID COLUMN	URBIS	AXIA 2 S1	MALLATITE	TUBULAR STEEL	6	GALVANISED	TUBULAR
46101768	CAISTOR AVENUE	Bottesford Parish	489794.87	407653.35	3	7002	00197014	28/06/2019 00:00	3	1	LESS THAN 30MPH	VERGE	0	POST TOP	NOT APPLICABLE	RIGID COLUMN	URBIS	AXIA 2 S1	MALLATITE	TUBULAR STEEL	6	GALVANISED	TUBULAR
46101768	CAISTOR AVENUE	Bottesford Parish	489830.92	407650.12	4	7003	00197015	28/06/2019 00:00	3	1	LESS THAN 30MPH	VERGE	0	POST TOP	NOT APPLICABLE	RIGID COLUMN	URBIS	AXIA 2 S1	MALLATITE	TUBULAR STEEL	6	GALVANISED	TUBULAR
46101768	CAISTOR AVENUE	Bottesford Parish	489861.56	407661.48	5	7004	00197016	01/04/2008 00:00	3	1	LESS THAN 30MPH	VERGE	0	POST TOP	NOT APPLICABLE	RIGID COLUMN	URBIS	AXIA 2 S1	BRITISH STEE	TUBULAR STEEL	6	GALVANISED	ASH
46101768	CAISTOR AVENUE	Bottesford Parish	489900.35	407658.88	6	7005	00197017	28/06/2019 00:00	3	1	LESS THAN 30MPH	VERGE	0	POST TOP	NOT APPLICABLE	RIGID COLUMN	URBIS	AXIA 2 S1	MALLATITE	TUBULAR STEEL	6	GALVANISED	TUBULAR
46101768	CAISTOR AVENUE	Bottesford Parish	489907.88	407667.21	7	7006	00197018	28/06/2019 00:00	3	1	LESS THAN 30MPH	VERGE	0	POST TOP	NOT APPLICABLE	RIGID COLUMN	URBIS	AXIA 2 S1	MALLATITE	TUBULAR STEEL	6	GALVANISED	TUBULAR
46101768	CAISTOR AVENUE	Bottesford Parish	489944.39	407665.9	8	7007	00197019	28/06/2019 00:00	3	1	LESS THAN 30MPH	VERGE	0	POST TOP	NOT APPLICABLE	RIGID COLUMN	URBIS	AXIA 2 S1	MALLATITE	TUBULAR STEEL	6	GALVANISED	TUBULAR
46101768	CAISTOR AVENUE	Bottesford Parish	489971.86	407680.94	9	7008	00197020	28/06/2019 00:00	3	1	LESS THAN 30MPH	VERGE	0	POST TOP	NOT APPLICABLE	RIGID COLUMN	URBIS	AXIA 2 S1	MALLATITE	TUBULAR STEEL	6	GALVANISED	TUBULAR
46101769	CANTERBURY CLOSE	Scunthorpe	487592.39	409411.58	1	7000	00197027	01/04/1995 00:00	5	2	LESS THAN 30MPH	BACK OF FOOTPATH	0	POST TOP	NOT APPLICABLE	RIGID COLUMN	URBIS	AXIA 2 S1	PETITJEAN	SHEET STEEL	6	GALVANISED	NIDD
46101769	CANTERBURY CLOSE	Scunthorpe	487612.3	409288.42	12	7011	00197038	01/04/1995 00:00	5	2	LESS THAN 30MPH	BACK OF FOOTPATH	0	POST TOP	NOT APPLICABLE	RIGID COLUMN	URBIS	AXIA 2 S1	PETITJEAN	SHEET STEEL	5	GALVANISED	NIDD
46101769	CANTERBURY CLOSE	Scunthorpe	487594.27	409286.13	13	7012	00197039	01/04/1995 00:00	5	2	LESS THAN 30MPH	BACK OF FOOTPATH	0	POST TOP	NOT APPLICABLE	RIGID COLUMN	URBIS	AXIA 2 S1	PETITJEAN	SHEET STEEL	5	GALVANISED	NIDD
46101769	CANTERBURY CLOSE	Scunthorpe	487584.94	409389.69	2	7001	00197028	01/04/1995 00:00	5	2	LESS THAN 30MPH	BACK OF FOOTPATH	0	POST TOP	NOT APPLICABLE	RIGID COLUMN	URBIS	AXIA 2 S1	PETITJEAN	SHEET STEEL	6	GALVANISED	NIDD
46101769	CANTERBURY CLOSE	Scunthorpe	487598.56	409368.71	3	7002	00197029	01/04/1995 00:00	5	2	LESS THAN 30MPH	BACK OF FOOTPATH	0	POST TOP	NOT APPLICABLE	RIGID COLUMN	URBIS	AXIA 2 S1	PETITJEAN	SHEET STEEL	6	GALVANISED	NIDD
46101769	CANTERBURY CLOSE	Scunthorpe	487591.03	409338.53	4FP	7003	00197030	01/04/1995 00:00	5	2	LESS THAN 30MPH	BACK OF FOOTPATH	0	POST TOP	NOT APPLICABLE	RIGID COLUMN	URBIS	AXIA 2 S1	PETITJEAN	SHEET STEEL	6	GALVANISED	NIDD
46101769	CANTERBURY CLOSE	Scunthorpe	487603.05	409321.65	5	7004	00197031	01/04/1995 00:00	5	2	LESS THAN 30MPH	BACK OF FOOTPATH	0	POST TOP	NOT APPLICABLE	RIGID COLUMN	URBIS	AXIA 2 S1	PETITJEAN	SHEET STEEL	6	GALVANISED	NIDD
46101769	CANTERBURY CLOSE	Scunthorpe	487603.61	409299.51	6	7005	00197032	01/04/1995 00:00	5	2	LESS THAN 30MPH	BACK OF FOOTPATH	0	POST TOP	NOT APPLICABLE	RIGID COLUMN	URBIS	AXIA 2 S1	PETITJEAN	SHEET STEEL	6	GALVANISED	NIDD
46101769	CANTERBURY CLOSE	Scunthorpe	487578.15	409299.51	7	7006	00197033	01/04/1995 00:00	5	2	LESS THAN 30MPH	BACK OF FOOTPATH	0	POST TOP	NOT APPLICABLE	RIGID COLUMN	URBIS	AXIA 2 S1	PETITJEAN	SHEET STEEL	6	GALVANISED	NIDD
46101769	CANTERBURY CLOSE	Scunthorpe	487577	409320.4	8	7007	00197034	01/04/1995 00:00	5	2	LESS THAN 30MPH	BACK OF FOOTPATH	0	POST TOP	NOT APPLICABLE	RIGID COLUMN	URBIS	AXIA 2 S1	PETITJEAN	SHEET STEEL	6	GALVANISED	NIDD
46101770	CARLTON STREET	Scunthorpe	489985.35	411194.18	1	7000	00197041	01/04/2002 00:00	4	4	LESS THAN 30MPH	SPLITTER ISLAND	1000	DOUBLE ARM	NOT APPLICABLE	RIGID COLUMN	URBIS	AXIA 2 S1	PETITJEAN	SHEET STEEL	8	GALVANISED	THAMES
46101770	CARLTON STREET	Scunthorpe	489909.8	411412.22	10	7009	00197050	26/05/2021 00:00	4	4	LESS THAN 30MPH	BACK OF FOOTPATH	500	SINGLE ARM	NOT APPLICABLE	RIGID COLUMN	URBIS	AXIA 2 S1	MALLATITE	TUBULAR STEEL	8	GALVANISED	TUBULAR
46101770	CARLTON STREET	Scunthorpe	489908.26	411428.1	11	7010	00197051	26/05/2021 00:00	4	4	LESS THAN 30MPH	BACK OF FOOTPATH	500	SINGLE ARM	NOT APPLICABLE	RIGID COLUMN	URBIS	AXIA 2 S1	MALLATITE	TUBULAR STEEL	8	GALVANISED	TUBULAR
46101770	CARLTON STREET	Scunthorpe	489907.62	411457.8	12	7011	00197052	10/09/2021 00:00	4	4	LESS THAN 30MPH	BACK OF FOOTPATH	500	SINGLE ARM	NOT APPLICABLE	RIGID COLUMN	URBIS	AXIA 2 S1	MALLATITE	TUBULAR STEEL	8	GALVANISED	TUBULAR
46101770	CARLTON STREET	Scunthorpe	489865.98	411449.56	13	7012	00197053	10/09/2021 00:00	4	4	LESS THAN 30MPH	BACK OF FOOTPATH	500	SINGLE ARM	NOT APPLICABLE	RIGID COLUMN	URBIS	AXIA 2 S1	MALLATITE	TUBULAR STEEL	8	GALVANISED	TUBULAR
46101770	CARLTON STREET	Scunthorpe	489968.87	411209.61	2	7001	00197042	01/04/1995 00:00	4	4	LESS THAN 30MPH	BACK OF FOOTPATH	1000	SINGLE ARM	NOT APPLICABLE	RIGID COLUMN	URBIS	AXIA 2 S1	PETITJEAN	SHEET STEEL	8	GALVANISED	THAMES
46101770	CARLTON STREET	Scunthorpe	489960.35	411231.69	3	7002	00197043	01/04/1993 00:00	4	4	LESS THAN 30MPH	BACK OF FOOTPATH	1000	SINGLE ARM	NOT APPLICABLE	RIGID COLUMN	URBIS	AXIA 2 S1	PETITJEAN	SHEET STEEL	8	GALVANISED	THAMES
46101770	CARLTON STREET	Scunthorpe	489966.99	411257.5	4	7003	00197044	26/05/2021 00:00	4	4	LESS THAN 30MPH	BACK OF FOOTPATH	500	SINGLE ARM	NOT APPLICABLE	RIGID COLUMN	URBIS	AXIA 2 S1	MALLATITE	TUBULAR STEEL	8	GALVANISED	TUBULAR
46101770	CARLTON STREET	Scunthorpe	489948.01	411273.76	5	7004	00197045	26/05/2021 00:00	4	4	LESS THAN 30MPH	BACK OF FOOTPATH	500	SINGLE ARM	NOT APPLICABLE	RIGID COLUMN	URBIS	AXIA 2 S1	MALLATITE	TUBULAR STEEL	8	GALVANISED	TUBULAR
46101770	CARLTON STREET	Scunthorpe	489940.46	411302.57	6FP	7005	00197046	26/05/2021 00:00	4	4	LESS THAN 30MPH	BACK OF FOOTPATH	500	SINGLE ARM	NOT APPLICABLE	RIGID COLUMN	URBIS	AXIA 2 S1	MALLATITE	TUBULAR STEEL	8	GALVANISED	TUBULAR
46101770	CARLTON STREET	Scunthorpe	489942.28	411340.46	7	7006	00197047	26/05/2021 00:00	4	4	LESS THAN 30MPH	BACK OF FOOTPATH	500	SINGLE ARM	NOT APPLICABLE	RIGID COLUMN	URBIS	AXIA 2 S1	MALLATITE	TUBULAR STEEL	8	GALVANISED	TUBULAR
46101770	CARLTON STREET	Scunthorpe	489924.4	411364.67	8FP	7007	00197048	26/05/2021 00:00	4	4	LESS THAN 30MPH	BACK OF FOOTPATH	500	SINGLE ARM	NOT APPLICABLE	RIGID COLUMN	URBIS	AXIA 2 S1	MALLATITE	TUBULAR STEEL	8	GALVANISED	TUBULAR
46101770	CARLTON STREET	Scunthorpe	489928.66	411395.27	9	7008	00197049	01/04/2014 00:00	4	4	LESS THAN 30MPH	BACK OF FOOTPATH	1000	SINGLE ARM	NOT APPLICABLE	RIGID COLUMN	URBIS	AXIA 2 S1	VALMONT ST	SHEET STEEL	8	GALVANISED	THAMES
46101775	CASTLE COURT	Barton upon Humber Parish	503139.49	421789.13	1	7000	00197056	01/04/1984 00:00	5	2	LESS THAN 30MPH	VERGE	0	POST TOP	MID GREY	RIGID COLUMN	URBIS	AXIA 2 S1	PETITJEAN	TUBULAR STEEL	5	PAINTED	METRO
46101775	CASTLE COURT	Barton upon Humber Parish	503127.8	421764.95	2	7001	00197057	01/04/1984 00:00	5	2	LESS THAN 30MPH	VERGE	0	POST TOP	MID GREY	RIGID COLUMN	URBIS	AXIA 2 S1	PETITJEAN	TUBULAR STEEL	5	PAINTED	METRO
46101775	CASTLE COURT	Barton upon Humber Parish	503149.49	421757.5	3	7002	00197058	01/04/1984 00:00	5	2	LESS THAN 30MPH	VERGE	0	POST TOP	MID GREY	RIGID COLUMN	URBIS	AXIA 2 S1	PETITJEAN	TUBULAR STEEL	5	PAINTED	METRO
46101776	CASTLE KEEP	Hibaldstow Parish	497337.52	403266.51	1	7000	00197059	01/04/1995 00:00	1	4	LESS THAN 30MPH	BACK OF FOOTPATH	0	POST TOP	NOT APPLICABLE	RIGID COLUMN	URBIS	AXIA 2 S1	PETITJEAN	SHEET STEEL	5	GALVANISED	NIDD
46101776	CASTLE KEEP	Hibaldstow Parish	497280.9	403342.38	10	7009	00197068	01/04/1980 00:00	1	4	LESS THAN 30MPH	VERGE	0	POST TOP	NOT APPLICABLE	RIGID COLUMN	URBIS	AXIA 2 S1	PETITJEAN	SHEET STEEL	5	GALVANISED	NIDD
46101776	CASTLE KEEP	Hibaldstow Parish	497333.25	403295.73	2	7001	00197060	01/04/1995 00:00	1	4	LESS THAN 30MPH	BACK OF FOOTPATH	0	POST TOP	NOT APPLICABLE	RIGID COLUMN	URBIS	AXIA 2 S1	PETITJEAN	SHEET STEEL	5	GALVANISED	NIDD
46101776	CASTLE KEEP	Hibaldstow Parish	497337.92	403320.7	3	7002	00197061	01/04/1995 00:00	1	4	LESS THAN 30MPH	BACK OF FOOTPATH	0	POST TOP	NOT APPLICABLE	RIGID COLUMN	URBIS	AXIA 2 S1	PETITJEAN	SHEET STEEL	5	GALVANISED	NIDD
46101776	CASTLE KEEP	Hibaldstow Parish	497327.99	403344.95	4	7003	00197062	01/04/1995 00:00	1	4	LESS THAN 30MPH	BACK OF FOOTPATH	0	POST TOP	NOT APPLICABLE	RIGID COLUMN	URBIS	AXIA 2 S1	PETITJEAN	SHEET STEEL	5	GALVANISED	NIDD
46101776	CASTLE KEEP	Hibaldstow Parish	497310.28	403367.44	5	7004	00197063	01/04/1995 00:00	1	4	LESS THAN 30MPH	BACK OF FOOTPATH	0	POST TOP	NOT APPLICABLE	RIGID COLUMN	URBIS	AXIA 2 S1	PETITJEAN	SHEET STEEL	5	GALVANISED	NIDD
46101776	CASTLE KEEP	Hibaldstow Parish	497290.75	403390.14	6	7005	00197064	01/04/1995 00:00	1	4	LESS THAN 30MPH	BACK OF FOOTPATH	0	POST TOP	NOT APPLICABLE	RIGID COLUMN	URBIS	AXIA 2 S1	PETITJEAN	SHEET STEEL	5	GALVANISED	NIDD
46101776	CASTLE KEEP	Hibaldstow Parish	497283.08	403413.22	7	7006	00197065	10/05/1995 00:00	1	4	LESS THAN 30MPH	VERGE	0	POST TOP	NOT APPLICABLE	RIGID COLUMN	URBIS	AXIA 2 S1	PETITJEAN	STEEL	5	GALVANISED	NIDD
46101776	CASTLE KEEP	Hibaldstow Parish	497274.09	403441.22	8	7007	00197066	01/04/1995 00:00	1	4	LESS THAN 30MPH	VERGE	0	POST TOP	NOT APPLICABLE	RIGID COLUMN	URBIS	AXIA 2 S1	PETITJEAN	SHEET STEEL	5	GALVANISED	NIDD
46101776	CASTLE KEEP	Hibaldstow Parish	497301.01	403353.28	9	7008	00197067	01/04/1980 00:00	1	4	LESS THAN 30MPH	VERGE	0	POST TOP	NOT APPLICABLE	RIGID COLUMN	URBIS	AXIA 2 S1	PETITJEAN	SHEET STEEL	5	GALVANISED	NIDD
46101777	CATHEDRAL COURT	Scunthorpe	489137.25	408847.97	1	7000	00197069	01/04/1995 00:00	5	2	LESS THAN 30MPH	BACK OF FOOTPATH	0	POST TOP	NOT APPLICABLE	RIGID COLUMN	URBIS	AXIA 2 S1	PETITJEAN	SHEET STEEL	5	GALVANISED	NIDD
46101777	CATHEDRAL COURT	Scunthorpe	489131.55	408821.09	2	7001	00197070	01/04/1995 00:00	5	2	LESS THAN 30MPH	BACK OF FOOTPATH	0	POST TOP	NOT APPLICABLE	RIGID COLUMN	URBIS	AXIA 2 S1	PETITJEAN	SHEET STEEL	5	GALVANISED	NIDD
46101777	CATHEDRAL COURT	Scunthorpe	489136.53	408791.85	3	7002	00197071	01/04/1995 00:00	5	2	LESS THAN 30MPH	BACK OF FOOTPATH	0	POST TOP	NOT APPLICABLE	RIGID COLUMN	URBIS	AXIA 2 S1	PETITJEAN	SHEET STEEL	5	GALVANISED	NIDD
46101778	CATHERINE GROVE	Broughton Parish	496569.75	408960.12	1	7000	00197072	01/03/2019 00:00	1	1	LESS THAN 30MPH	BACK OF FOOTPATH	0	POST TOP	NOT APPLICABLE	RIGID COLUMN	URBIS	AXIA 2 S1	MALLATITE	TUBULAR STEEL	6	GALVANISED	TUBULAR
46101778	CATHERINE GROVE	Broughton Parish	496588.02	408938.05	2	7001	00197073	01/04/1987 00:00	1	1	LESS THAN 30MPH	VERGE	0	POST TOP	NOT APPLICABLE	RIGID COLUMN	URBIS	AXIA 2 S1	PETITJEAN	SHEET STEEL	5	GALVANISED	NIDD
46101778	CATHERINE GROVE	Broughton Parish	496599.27	408917.52	3	7002	00197074	01/04/1987 00:00	1	1	LESS THAN 30MPH	VERGE	0	POST TOP	NOT APPLICABLE	RIGID COLUMN	URBIS	AXIA 2 S1	PETITJEAN	SHEET STEEL	5	GALVANISED	NIDD
46101778	CATHERINE GROVE	Broughton Parish	496579.46	408913.33	4	7003	00197075	01/04/1987 00:00	1	1	LESS THAN 30MPH	VERGE	0	POST TOP	NOT APPLICABLE	RIGID COLUMN	URBIS	AXIA 2 S1	PETITJEAN	SHEET STEEL	5	GALVANISED	NIDD
46101779	CEDAR CLOSE	Scawby Parish	497112.27	405143.94	1	7000	00197076	01/04/1991 00:00	2	2	LESS THAN 30MPH	VERGE	0	POST TOP	NOT APPLICABLE	RIGID COLUMN	URBIS	AXIA 2 S1	PETITJEAN	SHEET STEEL	5	GALVANISED	NIDD
46101779	CEDAR CLOSE	Scawby Parish	497079.44	405132.61	2	7001	00197077	01/04/2010 00:00	2	2	LESS THAN 30MPH	VERGE	0	POST TOP	NOT APPLICABLE	RIGID COLUMN	URBIS	AXIA 2 S1	MALLATITE	TUBULAR STEEL	6	GALVANISED	TUBULAR
46101780	CHAMOMILE CLOSE	Scunthorpe	490896.64	408007.8	1	7000	00197078	01/04/1988 00:00	1	3	LESS THAN 30MPH	BACK OF FOOTPATH	0	POST TOP	LIGHT GREY	RIGID COLUMN	URBIS	AXIA 2 S1	PETITJEAN	SHEET STEEL	5	PAINTED	NIDD
46101780	CHAMOMILE CLOSE	Scunthorpe	490890.03	407987.63	2	7001	00197079	01/04/1988 00:00	1	3	LESS THAN 30MPH	VERGE	0	POST TOP	LIGHT GREY	RIGID COLUMN	URBIS	AXIA 2 S1	PETITJEAN	SHEET STEEL	5	PAINTED	NIDD
46101780	CHAMOMILE CLOSE	Scunthorpe	490894.32	407962.51	3	7002	00197080	01/04/1988 00:00	1	3	LESS THAN 30MPH	BACK OF FOOTPATH	0	POST TOP	LIGHT GREY	RIGID COLUMN	URBIS	AXIA 2 S1	PETITJEAN	SHEET STEEL	5	PAINTED	NIDD
46101780	CHAMOMILE CLOSE	Scunthorpe	490904.4	407933.21	4	7003	00197081	01/04/1988 00:00	1	3	LESS THAN 30MPH	BACK OF FOOTPATH	0	POST TOP	LIGHT GREY	RIGID COLUMN	URBIS	AXIA 2 S1	PETITJEAN	SHEET STEEL	5	PAINTED	NIDD
46101780	CHAMOMILE CLOSE	Scunthorpe	490918.58	407913.36	5	7004	00197082	01/04/1988 00:00	1	3	LESS THAN 30MPH	BACK OF FOOTPATH	0	POST TOP	LIGHT GREY	RIGID COLUMN	URBIS	AXIA 2 S1	PETITJEAN	SHEET STEEL	5	PAINTED	NIDD
46101780	CHAMOMILE CLOSE	Scunthorpe	490932.75	407883.43	6	7005	00197083	01/04/1988 00:00	1	3	NOT ON A ROAD	BACK OF FOOTPATH	0	POST TOP	NOT APPLICABLE	RIGID COLUMN	URBIS	AXIA 2 S1	PETITJEAN	SHEET STEEL	5	GALVANISED	NIDD
46101782	CHESTNUT RISE	Barrow upon Humber Parish	506811	421174.48	1	7000	00197084	01/04/1995 00:00	4	1	LESS THAN 30MPH	BACK OF FOOTPATH	0	POST TOP	NOT APPLICABLE	RIGID COLUMN	URBIS	AXIA 2 S1	PETITJEAN	SHEET STEEL	5	GALVANISED	NIDD
46101782	CHESTNUT RISE	Barrow upon Humber Parish	506789.53	421192.89	2	7001	00197085	01/04/1995 00:00	4	1	LESS THAN 30MPH	BACK OF FOOTPATH	0	POST TOP	NOT APPLICABLE	RIGID COLUMN	URBIS	AXIA 2 S1	PETITJEAN	SHEET STEEL	5	GALVANISED	NIDD
46101782	CHESTNUT RISE	Barrow upon Humber Parish	506766.14	421214.85	3	7002	00197086	01/04/1995 00:00	4	1	LESS THAN 30MPH	BACK OF FOOTPATH	0	POST TOP	NOT APPLICABLE	RIGID COLUMN	URBIS	AXIA 2 S1	PETITJEAN	SHEET STEEL	5	GALVANISED	NIDD
46101782	CHESTNUT RISE	Barrow upon Humber Parish	506758.22	421239.22	4	7003	00197087	01/04/1995 00:00	4	1	LESS THAN 30MPH	BACK OF FOOTPATH	0	POST TOP	NOT APPLICABLE	RIGID COLUMN	URBIS	AXIA 2 S1	PETITJEAN	SHEET STEEL	5	GALVANISED	NIDD
46101782	CHESTNUT RISE	Barrow upon Humber Parish	506774.86	421262.07	5	7004	00197088	01/04/1995 00:00	4	1	LESS THAN 30MPH	BACK OF FOOTPATH	0	POST TOP	NOT APPLICABLE	RIGID COLUMN	URBIS	AXIA 2 S1	PETITJEAN	SHEET STEEL	5	GALVANISED	NIDD
46101782	CHESTNUT RISE	Barrow upon Humber Parish	506778.34	421288.59	6	7005	00197089	01/04/1995 00:00	4	1	LESS THAN 30MPH	BACK OF FOOTPATH	0	POST TOP	NOT APPLICABLE	RIGID COLUMN	URBIS	AXIA 2 S1	PETITJEAN	SHEET STEEL	5	GALVANISED	NIDD
46101782	CHESTNUT RISE	Barrow upon Humber Parish	506786.73	421312.9	7	7006	00197090	01/04/1995 00:00	4	1	LESS THAN 30MPH	BACK OF FOOTPATH	0	POST TOP	NOT APPLICABLE	RIGID COLUMN	URBIS	AXIA 2 S1	PETITJEAN	SHEET STEEL	5	GALVANISED	NIDD
46101782	CHESTNUT RISE	Barrow upon Humber Parish	506803.92	421336.84	8	7007	00197091	01/04/1993 00:00	4	1	LESS THAN 30MPH	FRONT OF FOOTPATH	0	POST TOP	NOT APPLICABLE	RIGID COLUMN	URBIS	AXIA 2 S1	PETITJEAN	TUBULAR STEEL	5	GALVANISED	STEPPED TUBULAR
46101782	CHESTNUT RISE	Barrow upon Humber Parish	506812.97	421365.34	9	7008	00197092	01/04/1993 00:00	4	1	LESS THAN 30MPH	BACK OF FOOTPATH	0	POST TOP	NOT APPLICABLE	RIGID COLUMN	URBIS	AXIA 2 S1	PETITJEAN	TUBULAR STEEL	5	GALVANISED	STEPPED TUBULAR
46101783	CHESTNUT WAY	Scunthorpe	489672.71	409627.92	1	7000	00197093	01/04/2006 00:00	2	4	BETWEEN 30-50 MPH	BACK OF FOOTPATH	0	POST TOP	NOT APPLICABLE	RIGID COLUMN	URBIS	AXIA 2 S1	MALLATITE	TUBULAR STEEL	6	GALVANISED	STEPPED TUBULAR
46101783	CHESTNUT WAY	Scunthorpe	490118.32	409313.96	1	7029	00197122	01/04/2004 00:00	2	4	NOT ON A ROAD	BACK OF FOOTPATH	0	POST TOP	NOT APPLICABLE	MID HINGED	URBIS	AXIA 2 S1	PETITJEAN	SHEET STEEL	6	GALVANISED	LEVEN
46101783	CHESTNUT WAY	Scunthorpe	489852.19	409459.36	10	7009	00197102	01/04/2006 00:00	2	4	BETWEEN 30-50 MPH	BACK OF FOOTPATH	0	POST TOP	NOT APPLICABLE	RIGID COLUMN	URBIS	AXIA 2 S1	MALLATITE	TUBULAR STEEL	6	GALVANISED	STEPPED TUBULAR
46101783	CHESTNUT WAY	Scunthorpe	489881.59	409450.4	11	7010	00197103	01/04/2006 00:00	2	4	BETWEEN 30-50 MPH	BACK OF FOOTPATH	0	POST TOP	NOT APPLICABLE	RIGID COLUMN	URBIS	AXIA 2 S1	MALLATITE	TUBULAR STEEL	6	GALVANISED	STEPPED TUBULAR
46101783	CHESTNUT WAY	Scunthorpe	489904.13	409431.22	12	7011	00197104	01/04/2006 00:00	2	4	BETWEEN 30-50 MPH	BACK OF FOOTPATH	0	POST TOP	NOT APPLICABLE	RIGID COLUMN	URBIS	AXIA 2 S1	MALLATITE	TUBULAR STEEL	6	GALVANISED	STEPPED TUBULAR
46101783	CHESTNUT WAY	Scunthorpe	489924.29	409413.86	13	7012	00197105	01/04/2006 00:00	2	4	BETWEEN 30-50 MPH	BACK OF FOOTPATH	0	POST TOP	NOT APPLICABLE	RIGID COLUMN	URBIS	AXIA 2 S1	MALLATITE	TUBULAR STEEL	6	GALVANISED	STEPPED TUBULAR
46101783	CHESTNUT WAY	Scunthorpe	489942.63	409382.36	14	7013	00197106	01/04/2006 00:00	2	4	BETWEEN 30-50 MPH	BACK OF FOOTPATH	0	POST TOP	NOT APPLICABLE	RIGID COLUMN	URBIS	AXIA 2 S1	MALLATITE	TUBULAR STEEL	6	GALVANISED	STEPPED TUBULAR
46101783	CHESTNUT WAY	Scunthorpe	489970.63	409374.24	15	7024	00197117	01/04/2006 00:00	2	4	BETWEEN 30-50 MPH	BACK OF FOOTPATH	0	POST TOP	NOT APPLICABLE	RIGID COLUMN	URBIS	AXIA 2 S1	MALLATITE	TUBULAR STEEL	6	GALVANISED	STEPPED TUBULAR

46101794	COLLUM GARDENS	Scunthorpe	489692.07	408780.9	10	7009	00197246	01/04/1993 00:00	2	4	LESS THAN 30MPH	BACK OF FOOTPATH	800	SINGLE ARM	NOT APPLICABLE	RIGID COLUMN	URBIS	AXIA 2 S1	PETITJEAN	SHEET STEEL	6	GALVANISED	DAER
46101794	COLLUM GARDENS	Scunthorpe	489672.33	408770.6	11	7010	00197247	01/04/1993 00:00	2	4	LESS THAN 30MPH	BACK OF FOOTPATH	800	SINGLE ARM	NOT APPLICABLE	RIGID COLUMN	URBIS	AXIA 2 S1	PETITJEAN	SHEET STEEL	6	GALVANISED	DAER
46101794	COLLUM GARDENS	Scunthorpe	489671.78	408739.6	12	7011	00197248	01/04/1993 00:00	2	4	LESS THAN 30MPH	BACK OF FOOTPATH	800	SINGLE ARM	NOT APPLICABLE	RIGID COLUMN	URBIS	AXIA 2 S1	PETITJEAN	SHEET STEEL	6	GALVANISED	DAER
46101794	COLLUM GARDENS	Scunthorpe	489659.44	408719.5	13	7012	00197249	01/04/1993 00:00	2	4	LESS THAN 30MPH	BACK OF FOOTPATH	800	SINGLE ARM	NOT APPLICABLE	RIGID COLUMN	URBIS	AXIA 2 S1	PETITJEAN	SHEET STEEL	6	GALVANISED	DAER
46101794	COLLUM GARDENS	Scunthorpe	489634.22	408682.3	2	7001	00197238	01/04/1993 00:00	2	4	LESS THAN 30MPH	BACK OF FOOTPATH	800	SINGLE ARM	NOT APPLICABLE	RIGID COLUMN	URBIS	AXIA 2 S1	PETITJEAN	SHEET STEEL	6	GALVANISED	DAER
46101794	COLLUM GARDENS	Scunthorpe	489643.96	408712.31	3	7002	00197239	01/04/1993 00:00	2	4	LESS THAN 30MPH	BACK OF FOOTPATH	800	SINGLE ARM	NOT APPLICABLE	RIGID COLUMN	URBIS	AXIA 2 S1	PETITJEAN	SHEET STEEL	6	GALVANISED	DAER
46101794	COLLUM GARDENS	Scunthorpe	489622.26	408718.41	4	7003	00197240	01/04/1993 00:00	2	4	LESS THAN 30MPH	BACK OF FOOTPATH	800	SINGLE ARM	NOT APPLICABLE	RIGID COLUMN	URBIS	AXIA 2 S1	PETITJEAN	SHEET STEEL	6	GALVANISED	DAER
46101794	COLLUM GARDENS	Scunthorpe	489607.05	408739.28	5	7004	00197241	01/04/1993 00:00	2	4	LESS THAN 30MPH	BACK OF FOOTPATH	800	SINGLE ARM	NOT APPLICABLE	RIGID COLUMN	URBIS	AXIA 2 S1	PETITJEAN	SHEET STEEL	6	GALVANISED	DAER
46101794	COLLUM GARDENS	Scunthorpe	489604.88	408764.3	6	7005	00197242	01/04/1993 00:00	2	4	LESS THAN 30MPH	BACK OF FOOTPATH	800	SINGLE ARM	NOT APPLICABLE	RIGID COLUMN	URBIS	AXIA 2 S1	PETITJEAN	SHEET STEEL	6	GALVANISED	DAER
46101794	COLLUM GARDENS	Scunthorpe	489616.61	408791.77	7	7006	00197243	01/04/1993 00:00	2	4	LESS THAN 30MPH	BACK OF FOOTPATH	800	SINGLE ARM	NOT APPLICABLE	RIGID COLUMN	URBIS	AXIA 2 S1	PETITJEAN	SHEET STEEL	6	GALVANISED	DAER
46101794	COLLUM GARDENS	Scunthorpe	489642.55	408797.21	8	7007	00197244	01/04/1993 00:00	2	4	LESS THAN 30MPH	BACK OF FOOTPATH	800	SINGLE ARM	NOT APPLICABLE	RIGID COLUMN	URBIS	AXIA 2 S1	PETITJEAN	SHEET STEEL	6	GALVANISED	DAER
46101794	COLLUM GARDENS	Scunthorpe	489668.36	408790.37	9	7008	00197245	01/04/1993 00:00	2	4	LESS THAN 30MPH	BACK OF FOOTPATH	800	SINGLE ARM	NOT APPLICABLE	RIGID COLUMN	URBIS	AXIA 2 S1	PETITJEAN	SHEET STEEL	6	GALVANISED	DAER
46101795	CROSBY ROAD	Scunthorpe	489577.73	411676.73	1	7000	00197250	02/04/2021 00:00	4	4	LESS THAN 30MPH	BACK OF FOOTPATH	500	SINGLE ARM	NOT APPLICABLE	RIGID COLUMN	URBIS	AXIA 2 S1	MALLATITE	TUBULAR STEEL	8	GALVANISED	TUBULAR
46101795	CROSBY ROAD	Scunthorpe	489657.05	411647.38	10	7009	00197259	16/06/2020 00:00	4	4	LESS THAN 30MPH	BACK OF FOOTPATH	0	POST TOP	NOT APPLICABLE	RIGID COLUMN	URBIS	AXIA 2 S1	MALLATITE	TUBULAR STEEL	6	GALVANISED	TUBULAR
46101795	CROSBY ROAD	Scunthorpe	489650.36	411676.01	11	7010	00197260	16/06/2020 00:00	4	4	LESS THAN 30MPH	VERGE	0	POST TOP	NOT APPLICABLE	RIGID COLUMN	URBIS	AXIA 2 S1	MALLATITE	TUBULAR STEEL	6	GALVANISED	TUBULAR
46101795	CROSBY ROAD	Scunthorpe	489681.92	411550.45	15X	7019	00197269	01/04/2006 00:00	4	4	LESS THAN 30MPH	BACK OF FOOTPATH	500	SINGLE ARM	NOT APPLICABLE	RIGID COLUMN	URBIS	AXIA 2 S1	PETITJEAN	SHEET STEEL	8	GALVANISED	THAMES
46101795	CROSBY ROAD	Scunthorpe	489621.54	411638.29	2	7001	00197251	02/04/2021 00:00	4	4	LESS THAN 30MPH	BACK OF FOOTPATH	500	SINGLE ARM	NOT APPLICABLE	RIGID COLUMN	URBIS	AXIA 2 S1	MALLATITE	TUBULAR STEEL	8	GALVANISED	TUBULAR
46101795	CROSBY ROAD	Scunthorpe	489645.26	411614.63	3	7002	00197252	01/04/2010 00:00	4	4	LESS THAN 30MPH	BACK OF FOOTPATH	500	SINGLE ARM	NOT APPLICABLE	RIGID COLUMN	URBIS	AXIA 2 S1	VALMONT ST	SHEET STEEL	8	GALVANISED	THAMES
46101795	CROSBY ROAD	Scunthorpe	489675.67	411529.52	4	7003	00197253	01/04/1980 00:00	4	4	LESS THAN 30MPH	BACK OF FOOTPATH	800	SINGLE ARM	NOT APPLICABLE	RIGID COLUMN	URBIS	AXIA 2 S1	PETITJEAN	SHEET STEEL	5	GALVANISED	DAER
46101795	CROSBY ROAD	Scunthorpe	489668.32	411548.91	5	7004	00197254	01/04/1980 00:00	4	4	LESS THAN 30MPH	BACK OF FOOTPATH	300	SINGLE ARM	NOT APPLICABLE	RIGID COLUMN	URBIS	AXIA 2 S1	PETITJEAN	SHEET STEEL	5	GALVANISED	DAER
46101795	CROSBY ROAD	Scunthorpe	489663.41	411582.13	6	7005	00197255	16/06/2020 00:00	4	4	LESS THAN 30MPH	BACK OF FOOTPATH	0	POST TOP	NOT APPLICABLE	RIGID COLUMN	URBIS	AXIA 2 S1	MALLATITE	TUBULAR STEEL	6	GALVANISED	TUBULAR
46101795	CROSBY ROAD	Scunthorpe	489650.43	411600.16	7	7006	00197256	01/04/1980 00:00	4	4	LESS THAN 30MPH	BACK OF FOOTPATH	300	SINGLE ARM	LIGHT GREY	RIGID COLUMN	URBIS	AXIA 2 S1	PETITJEAN	SHEET STEEL	5	PAINTED	DAER
46101795	CROSBY ROAD	Scunthorpe	489669.48	411611.78	8	7007	00197257	01/04/1980 00:00	4	4	LESS THAN 30MPH	BACK OF FOOTPATH	500	SINGLE ARM	NOT APPLICABLE	RIGID COLUMN	URBIS	AXIA 2 S1	PETITJEAN	SHEET STEEL	5	GALVANISED	DAER
46101795	CROSBY ROAD	Scunthorpe	489670.51	411630.93	9	7008	00197258	01/04/1985 00:00	4	4	LESS THAN 30MPH	BACK OF FOOTPATH	300	SINGLE ARM	NOT APPLICABLE	RIGID COLUMN	URBIS	AXIA 2 S1	PETITJEAN	SHEET STEEL	5	GALVANISED	DAER
46101796	CONIFER CLOSE	Scunthorpe	487468.66	408114.39	1	7000	00197275	03/12/2020 00:00	3	4	LESS THAN 30MPH	BACK OF FOOTPATH	0	POST TOP	NOT APPLICABLE	RIGID COLUMN	URBIS	AXIA 2 S1	MALLATITE	TUBULAR STEEL	6	GALVANISED	TUBULAR
46101796	CONIFER CLOSE	Scunthorpe	487431.22	408107.26	2	7001	00197276	14/03/2023 00:00	3	4	LESS THAN 30MPH	BACK OF FOOTPATH	0	POST TOP	NOT APPLICABLE	RIGID COLUMN	URBIS	AXIA 2 S1	MALLATITE	TUBULAR STEEL	6	GALVANISED	TUBULAR
46101796	CONIFER CLOSE	Scunthorpe	487429.03	408131.61	3	7002	00197277	03/12/2020 00:00	3	4	LESS THAN 30MPH	BACK OF FOOTPATH	0	POST TOP	NOT APPLICABLE	RIGID COLUMN	URBIS	AXIA 2 S1	MALLATITE	TUBULAR STEEL	6	GALVANISED	TUBULAR
46101797	COTTAGE BECK ROAD	Scunthorpe	489270.6	410533.11	1	7000	00197278	01/04/1983 00:00	2	4	LESS THAN 30MPH	BACK OF FOOTPATH	1250	SINGLE ARM	NOT APPLICABLE	RIGID COLUMN	URBIS	AXIA 2 S1	PETITJEAN	SHEET STEEL	10	GALVANISED	THAMES
46101797	COTTAGE BECK ROAD	Scunthorpe	489541.66	410609.52	10	7009	00197287	12/10/2020 00:00	2	4	LESS THAN 30MPH	BACK OF FOOTPATH	500	SINGLE ARM	NOT APPLICABLE	RIGID COLUMN	URBIS	AXIA 2 S1	MALLATITE	TUBULAR STEEL	8	GALVANISED	TUBULAR
46101797	COTTAGE BECK ROAD	Scunthorpe	489576.86	410614.22	11	7010	00197288	12/10/2020 00:00	2	4	LESS THAN 30MPH	BACK OF FOOTPATH	500	SINGLE ARM	NOT APPLICABLE	RIGID COLUMN	URBIS	AXIA 2 S1	MALLATITE	TUBULAR STEEL	8	GALVANISED	TUBULAR
46101797	COTTAGE BECK ROAD	Scunthorpe	489595.67	410624.52	12	7011	00197289	12/10/2020 00:00	2	4	LESS THAN 30MPH	BACK OF FOOTPATH	500	SINGLE ARM	NOT APPLICABLE	RIGID COLUMN	URBIS	AXIA 2 S1	MALLATITE	TUBULAR STEEL	8	GALVANISED	TUBULAR
46101797	COTTAGE BECK ROAD	Scunthorpe	489638.13	410620.4	13	7012	00197290	01/04/2012 00:00	2	4	LESS THAN 30MPH	BACK OF FOOTPATH	500	SINGLE ARM	NOT APPLICABLE	RIGID COLUMN	URBIS	AXIA 2 S1	VALMONT ST	SHEET STEEL	8	GALVANISED	THAMES
46101797	COTTAGE BECK ROAD	Scunthorpe	489689.82	410636.32	14	7013	00197291	12/10/2020 00:00	2	4	LESS THAN 30MPH	BACK OF FOOTPATH	500	SINGLE ARM	NOT APPLICABLE	RIGID COLUMN	URBIS	AXIA 2 S1	MALLATITE	TUBULAR STEEL	8	GALVANISED	TUBULAR
46101797	COTTAGE BECK ROAD	Scunthorpe	489743.78	410632.03	15	7014	00197292	01/04/1983 00:00	2	4	LESS THAN 30MPH	BACK OF FOOTPATH	1500	SINGLE ARM	NOT APPLICABLE	RIGID COLUMN	URBIS	AXIA 2 S1	PETITJEAN	SHEET STEEL	8	GALVANISED	THAMES
46101797	COTTAGE BECK ROAD	Scunthorpe	489784.2	410642.08	16FP	7015	00197293	01/04/1983 00:00	2	4	LESS THAN 30MPH	BACK OF FOOTPATH	1500	SINGLE ARM	NOT APPLICABLE	RIGID COLUMN	URBIS	AXIA 2 S1	PETITJEAN	SHEET STEEL	8	GALVANISED	THAMES
46101797	COTTAGE BECK ROAD	Scunthorpe	489816.1	410640.3	17	7016	00197294	01/04/2012 00:00	2	4	LESS THAN 30MPH	BACK OF FOOTPATH	1000	SINGLE ARM	NOT APPLICABLE	RIGID COLUMN	URBIS	AXIA 2 S1	VALMONT ST	SHEET STEEL	8	GALVANISED	THAMES
46101797	COTTAGE BECK ROAD	Scunthorpe	489844.28	410632.85	18	7017	00197295	01/04/2010 00:00	2	4	LESS THAN 30MPH	BACK OF FOOTPATH	1000	SINGLE ARM	NOT APPLICABLE	RIGID COLUMN	URBIS	AXIA 2 S1	VALMONT ST	SHEET STEEL	8	GALVANISED	THAMES
46101797	COTTAGE BECK ROAD	Scunthorpe	489865.5	410618.83	19	7018	00197296	04/02/2019 00:00	2	4	LESS THAN 30MPH	BACK OF FOOTPATH	1000	SINGLE ARM	NOT APPLICABLE	RIGID COLUMN	URBIS	AXIA 2 S1	MALLATITE	SHEET STEEL	10	GALVANISED	MALLATITE
46101797	COTTAGE BECK ROAD	Scunthorpe	489804.34	410637.35	1BB	7052	00197330	01/04/2013 00:00	2	4	LESS THAN 30MPH	FRONT OF FOOTPATH	0	POST TOP	BLACKWHITE	RIGID COLUMN	WRTL	ARC070	MALLATITE	TUBULAR STEEL	6	GALVANISED	TUBULAR
46101797	COTTAGE BECK ROAD	Scunthorpe	489297.01	410551.36	2	7001	00197279	12/10/2020 00:00	2	4	LESS THAN 30MPH	BACK OF FOOTPATH	500	SINGLE ARM	NOT APPLICABLE	RIGID COLUMN	URBIS	AXIA 2 S1	MALLATITE	TUBULAR STEEL	8	GALVANISED	TUBULAR
46101797	COTTAGE BECK ROAD	Scunthorpe	489894.28	410632.69	20	7019	00197297	12/10/2020 00:00	2	4	LESS THAN 30MPH	BACK OF FOOTPATH	500	SINGLE ARM	NOT APPLICABLE	RIGID COLUMN	URBIS	AXIA 2 S1	MALLATITE	TUBULAR STEEL	8	GALVANISED	TUBULAR
46101797	COTTAGE BECK ROAD	Scunthorpe	489933.75	410628.15	21	7020	00197298	12/10/2020 00:00	2	4	LESS THAN 30MPH	BACK OF FOOTPATH	500	SINGLE ARM	NOT APPLICABLE	RIGID COLUMN	URBIS	AXIA 2 S1	MALLATITE	TUBULAR STEEL	8	GALVANISED	TUBULAR
46101797	COTTAGE BECK ROAD	Scunthorpe	489963.28	410641.67	22	7021	00197299	12/10/2020 00:00	2	4	LESS THAN 30MPH	BACK OF FOOTPATH	500	SINGLE ARM	NOT APPLICABLE	RIGID COLUMN	URBIS	AXIA 2 S1	MALLATITE	TUBULAR STEEL	8	GALVANISED	TUBULAR
46101797	COTTAGE BECK ROAD	Scunthorpe	489999.77	410634.44	23	7022	00197300	01/04/1983 00:00	2	4	LESS THAN 30MPH	BACK OF FOOTPATH	2000	SINGLE ARM	NOT APPLICABLE	RIGID COLUMN	URBIS	AXIA 2 S1	PETITJEAN	SHEET STEEL	10	GALVANISED	THAMES
46101797	COTTAGE BECK ROAD	Scunthorpe	490056.83	410641.34	24	7023	00197301	01/04/2005 00:00	2	4	BETWEEN 30-50 MPH	BACK OF FOOTPATH	0	SINGLE ARM	NOT APPLICABLE	RIGID COLUMN	URBIS	AXIA 2 S1	MALLATITE	TUBULAR STEEL	8	GALVANISED	STEPPED TUBULAR
46101797	COTTAGE BECK ROAD	Scunthorpe	490082.87	410658.14	25	7024	00197302	01/04/2005 00:00	2	4	BETWEEN 30-50 MPH	BACK OF FOOTPATH	0	SINGLE ARM	NOT APPLICABLE	RIGID COLUMN	URBIS	AXIA 2 S1	MALLATITE	TUBULAR STEEL	8	GALVANISED	STEPPED TUBULAR
46101797	COTTAGE BECK ROAD	Scunthorpe	490115.35	410660.66	26	7025	00197303	01/04/2005 00:00	2	4	BETWEEN 30-50 MPH	BACK OF FOOTPATH	0	SINGLE ARM	NOT APPLICABLE	RIGID COLUMN	URBIS	AXIA 2 S1	MALLATITE	TUBULAR STEEL	8	GALVANISED	STEPPED TUBULAR
46101797	COTTAGE BECK ROAD	Scunthorpe	490142.59	410646.87	27	7026	00197304	01/04/2005 00:00	2	4	BETWEEN 30-50 MPH	BACK OF FOOTPATH	0	SINGLE ARM	NOT APPLICABLE	RIGID COLUMN	URBIS	AXIA 2 S1	MALLATITE	TUBULAR STEEL	8	GALVANISED	STEPPED TUBULAR
46101797	COTTAGE BECK ROAD	Scunthorpe	490169.81	410659.96	28	7027	00197305	01/04/2005 00:00	2	4	BETWEEN 30-50 MPH	BACK OF FOOTPATH	0	SINGLE ARM	NOT APPLICABLE	RIGID COLUMN	URBIS	AXIA 2 S1	MALLATITE	TUBULAR STEEL	8	GALVANISED	STEPPED TUBULAR
46101797	COTTAGE BECK ROAD	Scunthorpe	490197.25	410659.4	29	7028	00197306	01/04/2005 00:00	2	4	BETWEEN 30-50 MPH	BACK OF FOOTPATH	0	SINGLE ARM	NOT APPLICABLE	RIGID COLUMN	URBIS	AXIA 2 S1	MALLATITE	TUBULAR STEEL	8	GALVANISED	STEPPED TUBULAR
46101797	COTTAGE BECK ROAD	Scunthorpe	489807.8	410626.71	2BB	7053	00197331	01/04/2013 00:00	2	4	LESS THAN 30MPH	FRONT OF FOOTPATH	0	POST TOP	BLACKWHITE	RIGID COLUMN	WRTL	ARC070	MALLATITE	TUBULAR STEEL	6	GALVANISED	TUBULAR
46101797	COTTAGE BECK ROAD	Scunthorpe	489321.15	410558.36	3	7002	00197280	12/10/2020 00:00	2	4	LESS THAN 30MPH	BACK OF FOOTPATH	500	SINGLE ARM	NOT APPLICABLE	RIGID COLUMN	URBIS	AXIA 2 S1	MALLATITE	TUBULAR STEEL	8	GALVANISED	TUBULAR
46101797	COTTAGE BECK ROAD	Scunthorpe	490231.69	410645.82	30	7029	00197307	01/04/2005 00:00	2	4	BETWEEN 30-50 MPH	BACK OF FOOTPATH	0	SINGLE ARM	NOT APPLICABLE	RIGID COLUMN	URBIS	AXIA 2 S1	MALLATITE	TUBULAR STEEL	8	GALVANISED	STEPPED TUBULAR
46101797	COTTAGE BECK ROAD	Scunthorpe	490264.03	410646.8	31	7030	00197308	01/04/2005 00:00	2	4	BETWEEN 30-50 MPH	BACK OF FOOTPATH	0	SINGLE ARM	NOT APPLICABLE	RIGID COLUMN	URBIS	AXIA 2 S1	MALLATITE	TUBULAR STEEL	8	GALVANISED	STEPPED TUBULAR
46101797	COTTAGE BECK ROAD	Scunthorpe	490300.29	410666.12	32	7031	00197309	01/04/2005 00:00	2	4	BETWEEN 30-50 MPH	BACK OF FOOTPATH	0	SINGLE ARM	NOT APPLICABLE	RIGID COLUMN	URBIS	AXIA 2 S1	MALLATITE	TUBULAR STEEL	8	GALVANISED	STEPPED TUBULAR
46101797	COTTAGE BECK ROAD	Scunthorpe	490334.03	410661.78	33	7032	00197310	01/04/2005 00:00	2	4	BETWEEN 30-50 MPH	BACK OF FOOTPATH	0	SINGLE ARM	NOT APPLICABLE	RIGID COLUMN	URBIS	AXIA 2 S1	MALLATITE	TUBULAR STEEL	8	GALVANISED	STEPPED TUBULAR
46101797	COTTAGE BECK ROAD	Scunthorpe	490362.03	410679	34	7033	00197311	01/04/2005 00:00	2	4	BETWEEN 30-50 MPH	BACK OF FOOTPATH	0	SINGLE ARM	NOT APPLICABLE	RIGID COLUMN	URBIS	AXIA 2 S1	MALLATITE	TUBULAR STEEL	8	GALVANISED	STEPPED TUBULAR
46101797	COTTAGE BECK ROAD	Scunthorpe	490393.81	410686.42	35	7034	00197312	01/04/2005 00:00	2	4	BETWEEN 30-50 MPH	BACK OF FOOTPATH	0	SINGLE ARM	NOT APPLICABLE	RIGID COLUMN	URBIS	AXIA 2 S1	MALLATITE	TUBULAR STEEL	8	GALVANISED	STEPPED TUBULAR
46101797	COTTAGE BECK ROAD	Scunthorpe	490425.87	410680.12	36	7035	00197313	01/04/2005 00:00	2	4	BETWEEN 30-50 MPH	BACK OF FOOTPATH	0	SINGLE ARM	NOT APPLICABLE	RIGID COLUMN	URBIS	AXIA 2 S1	MALLATITE	TUBULAR STEEL	8	GALVANISED	STEPPED TUBULAR
46101797	COTTAGE BECK ROAD	Scunthorpe	490459.75	410696.5	37	7036	00197314	01/04/2005 00:00	2	4	BETWEEN 30-50 MPH	BACK OF FOOTPATH	0	SINGLE ARM	NOT APPLICABLE	RIGID COLUMN	URBIS	AXIA 2 S1	MALLATITE	TUBULAR STEEL	8	GALVANISED	STEPPED TUBULAR
46101797	COTTAGE BECK ROAD	Scunthorpe	490488.73	410701.26	38	7037	00197315	01/04/2005 00:00	2	4	BETWEEN 30-50 MPH	BACK OF FOOTPATH	0	SINGLE ARM	NOT APPLICABLE	RIGID COLUMN	URBIS	AXIA 2 S1	MALLATITE	TUBULAR STEEL	8	GALVANISED	STEPPED TUBULAR
46101797	COTTAGE BECK ROAD	Scunthorpe	490522.47	410707	39	7038	00197316	01/04/2005 00:00	2	4	BETWEEN 30-50 MPH	BACK OF FOOTPATH	0	SINGLE ARM	NOT APPLICABLE	RIGID COLUMN	URBIS	AXIA 2 S1	MALLATITE	TUBULAR STEEL	8	GALVANISED	STEPPED TUBULAR
46101797	COTTAGE BECK ROAD	Scunthorpe	489356.64	410557.05	4	7003	00197281	01/04/1983 00:00	2	4	LESS THAN 30MPH	BACK OF FOOTPATH	1250	SINGLE ARM	NOT APPLICABLE	RIGID COLUMN	URBIS	AXIA 2 S1	PETITJEAN	SHEET STEEL	10	GALVANISED	THAMES
46101797	COTTAGE BECK ROAD	Scunthorpe	490553.27	410700.98	40	7039	00197317	01/04/2005 00:00	2	4	BETWEEN 30-50 MPH	BACK OF FOOTPATH	0	SINGLE ARM	NOT APPLICABLE	RIGID COLUMN	URBIS	AXIA 2 S1	MALLATITE	TUBULAR STEEL	8	GALVANISED	STEPPED TUBULAR
46101797	COTTAGE BECK ROAD	Scunthorpe	490585.61	410717.08	41	7040	00197318	01/04/2005 00:00	2	4	BETWEEN 30-50 MPH	BACK OF FOOTPATH	0	SINGLE ARM	NOT APPLICABLE	RIGID COLUMN	URBIS	AXIA 2 S1	MALLATITE	TUBULAR STEEL	8	GALVANISED	STEPPED TUBULAR
46101797	COTTAGE BECK ROAD	Scunthorpe	490610.11	410721.14	42	7041	00197319	01/04/2005 00:00	2	4	BETWEEN 30-50 MPH	BACK OF FOOTPATH	0	SINGLE ARM	NOT APPLICABLE	RIGID COLUMN	URBIS	AXIA 2 S1	MALLATITE	TUBULAR STEEL	8	GALVANISED	STEPPED TUBULAR
46101797	COTTAGE BECK ROAD	Scunthorpe	490632.09	410724.36	43	7042	00197320	01/04/2005 00:00	2	4	BETWEEN 30-50 MPH	BACK OF FOOTPATH	0	SINGLE ARM	NOT APPLICABLE	RIGID COLUMN	URBIS	AXIA 2 S1	MALLATITE	TUBULAR STEEL	8	GALVANISED	STEPPED TUBULAR
46101797	COTTAGE BECK ROAD	Scunthorpe	490654.63	410726.32	44	7043	00197321	01/04/2005 00:00	2	4	BETWEEN 30-50 MPH	BACK OF FOOTPATH	0	SINGLE ARM	NOT APPLICABLE	RIGID COLUMN	URBIS	AXIA 2 S1	MALLATITE	TUBULAR STEEL	8	GALVANISED	STEPPED TUBULAR
46101797	COTTAGE BECK ROAD	Scunthorpe	490685.85	410720.72	45	7044	00197322	01/04/2005 00:00	2	4	BETWEEN 30-50 MPH	BACK OF FOOTPATH	0	SINGLE ARM	NOT APPLICABLE	RIGID COLUMN	URBIS	AXIA 2 S1	MALLATITE	TUBULAR STEEL	8	GALVANISED	STEPPED TUBULAR
46101797	COTTAGE BECK ROAD	Scunthorpe	490703.91	410700.28	46	7045	00197323	01/04/2005 00:00	2	4	BETWEEN 30-50 MPH	BACK OF FOOTPATH	0	SINGLE ARM	NOT APPLICABLE	RIGID COLUMN	URBIS	AXIA 2 S1	MALLATITE	TUBULAR STEEL	8	GALVANISED	STEPPED TUBULAR
46101797	COTTAGE BECK ROAD	Scunthorpe	490730.79	410703.5	47	7046	00197324	01/04/2005 00:00	2	4	BETWEEN 30-50 MPH	BACK OF FOOTPATH	0	SINGLE ARM	NOT APPLICABLE	RIGID COLUMN	URBIS	AXIA 2 S1	MALLATITE	TUBULAR STEEL	8	GALVANISED	STEPPED TUBULAR
46101797	COTTAGE BECK ROAD	Scunthorpe	490727.15	410691.18	48	7047	00197325	01/04/2005 00:00	2	4	BETWEEN 30-50 MPH	BACK OF FOOTPATH	0	SINGLE ARM	NOT APPLICABLE	RIGID COLUMN	URBIS	AXIA 2 S1	MALLATITE	TUBULAR STEEL	8	GALVANISED	STEPPED TUBULAR
46101797	COTTAGE BECK ROAD	Scunthorpe	490750.67	410701.26	49	7048	00197326	01/04/2005 00:00	2	4	BETWEEN 30-50 MPH	BACK OF FOOTPATH	0	SINGLE ARM	NOT APPLICABLE	RIGID COLUMN	URBIS	AXIA 2 S1	MALLATITE	TUBULAR STEEL	8	GALVANISED	STEPPED TUBULAR
46101797	COTTAGE BECK ROAD	Scunthorpe	489387.94	410577.04	5	7004	00197282	12/10/2020 00:00	2	4	LESS THAN 30MPH	BACK OF FOOTPATH	500	SINGLE ARM	NOT APPLICABLE	RIGID COLUMN	URBIS	AXIA 2 S1	MALLATITE	TUBULAR STEEL	8	GALVANISED	TUBULAR
46101797	COTTAGE BECK ROAD	Scunthorpe	490750.81	410684.74	50	7049	00197327	01/04/2005 00:00	2	4	BETWEEN 30-50 MPH	BACK OF FOOTPATH	0	SINGLE ARM	NOT APPLICABLE	RIGID COLUMN	URBIS	AXIA 2 S1	MALLATITE	TUBULAR STEEL	8	GALVANISED	STEPPED TUBULAR
46101797	COTTAGE BECK ROAD	Scunthorpe	490770.13	410706.86	51	7050	00197328	01/04/2005 00:00	2	4	BETWEEN 30-50 MPH	BACK OF FOOTPATH	0	SINGLE ARM	NOT APPLICABLE	RIGID COLUMN	URBIS	AXIA 2 S1	MALLATITE	TUBULAR STEEL	8	GALVANISED	STEPPED TUBULAR
46101797	COTTAGE BECK ROAD	Scunthorpe	490778.39	410688.38	52	7051	00197329	01/04/2005 00:00	2	4	BETWEEN 30-50 MPH	BACK OF FOOTPATH	0	SINGLE ARM	NOT APPLICABLE	RIGID COLUMN	URBIS	AXIA 2 S1	MALLATITE	TUBULAR STEEL	8	GALVANISED	STEPPED TUBULAR
46101797	COTTAGE BECK ROAD	Scunthorpe	489422.1	410575.41	6	7005	00197283	01/04/1983 00:00	2	4	LESS THAN 30MPH	BACK OF FOOTPATH	1500	SINGLE ARM	NOT APPLICABLE	RIGID COLUMN	URBIS	AXIA 2 S1	PETITJEAN	SHEET STEEL	8	GALVANISED	THAMES
46101797	COTTAGE BECK ROAD	Scunthorpe	489451.62	410594.81	7	7006	00197284	01/04/1983 00:00	2	4	LESS THAN 30MPH	BACK OF FOOTPATH	1000	SINGLE ARM	NOT APPLICABLE	RIGID COLUMN	URBIS	AXIA 2 S1	PETITJEAN	SHEET STEEL	8	GALVANISED	THAMES
46101797	COTTAGE BECK ROAD	Scunthorpe	489485.92	410593.05	8	7007	00197285	01/04/1983 00:00	2	4	LESS THAN 30MPH	BACK OF FOOTPATH	1500	SINGLE ARM	NOT APPLICABLE	RIGID COLUMN	URBIS	AXIA 2 S1	PETITJEAN	SHEET STEEL	8	GALVANISED	THAMES
46101797	COTTAGE BECK ROAD	Scunthorpe	489512.53	410612.35	9FP	7008	00197286	12/10/2020 00:00	2	4	LESS THAN 30MPH	BACK OF FOOTPATH	500	SINGLE ARM	NOT APPLICABLE	RIGID COLUMN	URBIS	AXIA 2 S1	MALLATITE	TUBULAR STEEL	8	GALVANISED	TUBULAR
46101798	COVENTRY CLOSE	Scunthorpe	487585.76	409092.74	1	7000	00197332	01/04/1995 00:00	5	2	LESS THAN 30MPH	BACK OF FOOTPATH	0	POST TOP	NOT APPLICABLE	RIGID COLUMN	URBIS	AXIA 2 S1	PETITJEAN	SHEET STEEL	6	GALVANISED	NIDD
46101798	COVENTRY CLOSE	Scunthorpe	487596	409214	12	7008	04200112	01/04/1995 00:00	5	2	LESS THAN 30MPH	BACK OF PATH	0	POST TOP	NOT APPLICABLE	RIGID COLUMN	URBIS	AXIA 2 S1	PETITJEAN	SHEET STEEL	6	GALVANISED	NIDD
46101798	COVENTRY CLOSE	Scunthorpe	487595.1	409115.53	2	7001	00197333	01/04/1995 00:00	5	2	LESS THAN 30MPH	BACK OF FOOTPATH

46101806	DONCASTER ROAD	Gunness Parish	484273.36	411190.73	86	7087	00197482	01/04/2005 00:00	2	2	BETWEEN 30-50 MPH	BACK OF FOOTPATH	1250	SINGLE ARM	NOT APPLICABLE	RIGID COLUMN	URBIS	AXIA 2 S1	PETITJEAN	SHEET STEEL	10	GALVANISED	THAMES
46101806	DONCASTER ROAD	Gunness Parish	484284.66	411169.99	87FP	7088	00197483	01/04/1973 00:00	2	2	BETWEEN 30-50 MPH	BACK OF FOOTPATH	500	SINGLE ARM	MID GREY	RIGID COLUMN	URBIS	AXIA 2 S1	COHEN	TUBULAR STEEL	10	PAINTED	COHEN
46101806	DONCASTER ROAD	Gunness Parish	484262.52	411163.18	88	7089	00197484	01/04/2005 00:00	2	2	BETWEEN 30-50 MPH	BACK OF FOOTPATH	1250	SINGLE ARM	NOT APPLICABLE	RIGID COLUMN	URBIS	AXIA 2 S1	PETITJEAN	SHEET STEEL	10	GALVANISED	THAMES
46101806	DONCASTER ROAD	Gunness Parish	484257.74	411134.62	89	7090	00197485	01/04/2005 00:00	2	2	BETWEEN 30-50 MPH	FRONT OF FOOTPATH	1250	SINGLE ARM	NOT APPLICABLE	RIGID COLUMN	URBIS	AXIA 2 S1	PETITJEAN	SHEET STEEL	10	GALVANISED	THAMES
46101806	DONCASTER ROAD	Gunness Parish	486223.52	411147.2	8X	7113	00197508	01/04/2007 00:00	2	2	GREATER THAN 50MPH	VERGE	1000	SINGLE ARM	NOT APPLICABLE	RIGID COLUMN	HOLOPHANE	VMAX V2 L144 LED	PETITJEAN	SHEET STEEL	12	GALVANISED	THAMES
46101806	DONCASTER ROAD	Gunness Parish	486822.72	411114.04	9	7008	00197403	01/04/1978 00:00	2	2	BETWEEN 30-50 MPH	VERGE	1250	SINGLE ARM	NOT APPLICABLE	RIGID COLUMN	URBIS	AXIA 2 S1	PETITJEAN	SHEET STEEL	12	GALVANISED	THAMES
46101806	DONCASTER ROAD	Gunness Parish	484269.87	411091.29	90	7091	00197486	01/04/1986 00:00	2	2	BETWEEN 30-50 MPH	FRONT OF FOOTPATH	1250	SINGLE ARM	NOT APPLICABLE	RIGID COLUMN	URBIS	AXIA 2 S1	PETITJEAN	SHEET STEEL	10	GALVANISED	THAMES
46101806	DONCASTER ROAD	Gunness Parish	484250.69	411052.29	91	7092	00197487	01/04/1986 00:00	2	2	BETWEEN 30-50 MPH	FRONT OF FOOTPATH	1250	SINGLE ARM	NOT APPLICABLE	RIGID COLUMN	URBIS	AXIA 2 S1	PETITJEAN	SHEET STEEL	8	GALVANISED	THAMES
46101806	DONCASTER ROAD	Gunness Parish	484266.39	411014.1	92	7093	00197488	14/06/2020 00:00	2	2	BETWEEN 30-50 MPH	BACK OF FOOTPATH	1000	POST TOP	NOT APPLICABLE	RIGID COLUMN	URBIS	AXIA 2 S1	MALLATITE	TUBULAR STEEL	10	GALVANISED	TUBULAR
46101806	DONCASTER ROAD	Gunness Parish	484250.37	410980.96	93	7094	00197489	01/04/1986 00:00	2	2	BETWEEN 30-50 MPH	VERGE	1250	SINGLE ARM	NOT APPLICABLE	RIGID COLUMN	URBIS	AXIA 2 S1	PETITJEAN	SHEET STEEL	10	GALVANISED	THAMES
46101806	DONCASTER ROAD	Gunness Parish	484263.45	410941.54	94	7095	00197490	01/03/2023 00:00	2	2	BETWEEN 30-50 MPH	BACK OF FOOTPATH	1000	SINGLE ARM	NOT APPLICABLE	RIGID COLUMN	URBIS	AXIA 2 S1	MALLATITE	TUBULAR STEEL	10	GALVANISED	TUBULAR
46101806	DONCASTER ROAD	Gunness Parish	484260.48	410897.34	95	7096	00197491	01/04/2015 00:00	2	2	BETWEEN 30-50 MPH	VERGE	1000	SINGLE ARM	NOT APPLICABLE	RIGID COLUMN	URBIS	AXIA 2 S1	VALMONT ST	SHEET STEEL	10	GALVANISED	THAMES
46101806	DONCASTER ROAD	Gunness Parish	484261.21	410877.68	96	7097	00197492	13/03/2019 00:00	2	2	BETWEEN 30-50 MPH	FRONT OF FOOTPATH	1000	SINGLE ARM	NOT APPLICABLE	RIGID COLUMN	URBIS	AXIA 2 S1	MALLATITE	STEEL	10	GALVANISED	MALLATITE
46101806	DONCASTER ROAD	Gunness Parish	484239.97	410849.09	97	7098	00197493	01/04/1973 00:00	2	2	BETWEEN 30-50 MPH	BACK OF FOOTPATH	2000	SINGLE ARM	MID GREY	RIGID COLUMN	URBIS	AXIA 2 S1	COHEN	TUBULAR STEEL	8	PAINTED	COHEN
46101806	DONCASTER ROAD	Gunness Parish	484248.35	410823.24	98	7099	00197494	01/04/2005 00:00	2	2	BETWEEN 30-50 MPH	SPLITTER ISLAND	1250	SINGLE ARM	NOT APPLICABLE	RIGID COLUMN	URBIS	AXIA 2 S1	PETITJEAN	SHEET STEEL	8	GALVANISED	THAMES
46101806	DONCASTER ROAD	Gunness Parish	484240.55	410791.66	99	7100	00197495	01/06/2022 00:00	2	2	BETWEEN 30-50 MPH	VERGE	1000	SINGLE ARM	NOT APPLICABLE	RIGID COLUMN	URBIS	AXIA 2 S1	MALLATITE	TUBULAR STEEL	8	GALVANISED	TUBULAR
46101806	DONCASTER ROAD	Gunness Parish	486247.75	411156.3	9X	7114	00197509	01/04/1978 00:00	2	2	GREATER THAN 50MPH	SPLITTER ISLAND	1000	SINGLE ARM	MID GREY	RIGID COLUMN	HOLOPHANE	VMAX V2 L144 LED	PETITJEAN	SHEET STEEL	12	PAINTED	THAMES
46101807	DONCASTER ROAD	Scunthorpe	489165.27	411315.01	1	7000	00197516	01/04/2013 00:00	6	3	LESS THAN 30MPH	BACK OF FOOTPATH	1500	SINGLE ARM	NOT APPLICABLE	RIGID COLUMN	PHILIPS	LUMA 2 20 KLM	SAPA	ALUMINIUM	12	NOT APPLICABI	CONICAL
46101807	DONCASTER ROAD	Scunthorpe	488851	411301.4	10	7009	00197525	01/04/2012 00:00	6	3	LESS THAN 30MPH	BACK OF FOOTPATH	1000	SINGLE ARM	NOT APPLICABLE	RIGID COLUMN	URBIS	AXIA 2 S1	VALMONT ST	SHEET STEEL	12	GALVANISED	THAMES
46101807	DONCASTER ROAD	Scunthorpe	488820.68	411296.15	11	7010	00197526	01/04/1977 00:00	6	3	LESS THAN 30MPH	FRONT OF FOOTPATH	1250	SINGLE ARM	DARK GREY	RIGID COLUMN	URBIS	AXIA 2 S1	PETITJEAN	SHEET STEEL	12	PAINTED	THAMES
46101807	DONCASTER ROAD	Scunthorpe	488781.67	411275.99	12	7011	00197527	21/06/2024 00:00	6	3	LESS THAN 30MPH	FRONT OF FOOTPATH	1250	SINGLE ARM	NOT APPLICABLE	RIGID COLUMN	URBIS	AXIA 2 S1	MALLATITE	TUBULAR STEEL	12	GALVANISED	TUBULAR
46101807	DONCASTER ROAD	Scunthorpe	488744.95	411288.32	13	7012	00197528	01/04/1977 00:00	6	3	LESS THAN 30MPH	FRONT OF FOOTPATH	1250	SINGLE ARM	DARK GREY	RIGID COLUMN	URBIS	AXIA 2 S1	PETITJEAN	SHEET STEEL	12	PAINTED	THAMES
46101807	DONCASTER ROAD	Scunthorpe	488708.82	411271.25	14	7013	00197529	01/04/2010 00:00	6	3	LESS THAN 30MPH	VERGE	1250	SINGLE ARM	NOT APPLICABLE	RIGID COLUMN	URBIS	AXIA 2 S1	VALMONT ST	SHEET STEEL	12	GALVANISED	THAMES
46101807	DONCASTER ROAD	Scunthorpe	488669.54	411280.33	15	7014	00197530	01/04/2010 00:00	6	3	LESS THAN 30MPH	VERGE	1000	SINGLE ARM	NOT APPLICABLE	RIGID COLUMN	URBIS	AXIA 2 S1	VALMONT ST	SHEET STEEL	10	GALVANISED	THAMES
46101807	DONCASTER ROAD	Scunthorpe	488640.84	411263.78	16	7015	00197531	01/04/1970 00:00	6	3	LESS THAN 30MPH	VERGE	500	SINGLE ARM	NOT APPLICABLE	RIGID COLUMN	URBIS	AXIA 2 S1	MALLATITE	TUBULAR STEEL	8	GALVANISED	TUBULAR
46101807	DONCASTER ROAD	Scunthorpe	488602.87	411269.35	17	7016	00197532	01/04/1970 00:00	6	3	LESS THAN 30MPH	VERGE	500	SINGLE ARM	NOT APPLICABLE	RIGID COLUMN	URBIS	AXIA 2 S1	MALLATITE	TUBULAR STEEL	8	GALVANISED	TUBULAR
46101807	DONCASTER ROAD	Scunthorpe	488568.87	411255.15	18	7017	00197533	04/07/2017 00:00	6	3	LESS THAN 30MPH	VERGE	500	SINGLE ARM	NOT APPLICABLE	RIGID COLUMN	URBIS	AXIA 2 S1	VALMONT ST	SHEET STEEL	8	GALVANISED	THAMES
46101807	DONCASTER ROAD	Scunthorpe	488528.05	411261.2	19	7018	00197534	01/04/1970 00:00	6	3	LESS THAN 30MPH	VERGE	500	SINGLE ARM	NOT APPLICABLE	RIGID COLUMN	URBIS	AXIA 2 S1	MALLATITE	TUBULAR STEEL	8	GALVANISED	TUBULAR
46101807	DONCASTER ROAD	Scunthorpe	489125.61	411324.78	2	7001	00197517	01/04/1977 00:00	6	3	LESS THAN 30MPH	FRONT OF FOOTPATH	1250	SINGLE ARM	DARK GREY	RIGID COLUMN	URBIS	AXIA 2 S1	PETITJEAN	SHEET STEEL	12	PAINTED	THAMES
46101807	DONCASTER ROAD	Scunthorpe	488493	411247.16	20	7019	00197535	01/04/2010 00:00	6	3	LESS THAN 30MPH	VERGE	500	SINGLE ARM	NOT APPLICABLE	RIGID COLUMN	URBIS	AXIA 2 S1	VALMONT ST	SHEET STEEL	8	GALVANISED	THAMES
46101807	DONCASTER ROAD	Scunthorpe	488458.06	411253.16	21	7020	00197536	01/04/2010 00:00	6	3	LESS THAN 30MPH	VERGE	500	SINGLE ARM	NOT APPLICABLE	RIGID COLUMN	URBIS	AXIA 2 S1	VALMONT ST	SHEET STEEL	8	GALVANISED	THAMES
46101807	DONCASTER ROAD	Scunthorpe	488419.5	411236.49	22	7021	00197537	01/04/1970 00:00	6	3	LESS THAN 30MPH	VERGE	500	SINGLE ARM	NOT APPLICABLE	RIGID COLUMN	URBIS	AXIA 2 S1	MALLATITE	TUBULAR STEEL	8	GALVANISED	TUBULAR
46101807	DONCASTER ROAD	Scunthorpe	488387.83	411244.67	23	7022	00197538	01/04/2010 00:00	6	3	LESS THAN 30MPH	VERGE	500	SINGLE ARM	NOT APPLICABLE	RIGID COLUMN	URBIS	AXIA 2 S1	VALMONT ST	SHEET STEEL	8	GALVANISED	THAMES
46101807	DONCASTER ROAD	Scunthorpe	488363.96	411232.47	24	7023	00197539	01/04/1970 00:00	6	3	LESS THAN 30MPH	VERGE	500	SINGLE ARM	NOT APPLICABLE	RIGID COLUMN	URBIS	AXIA 2 S1	MALLATITE	TUBULAR STEEL	8	GALVANISED	TUBULAR
46101807	DONCASTER ROAD	Scunthorpe	488326.7	411238.24	25	7024	00197540	01/04/1970 00:00	6	3	LESS THAN 30MPH	VERGE	500	SINGLE ARM	NOT APPLICABLE	RIGID COLUMN	URBIS	AXIA 2 S1	MALLATITE	TUBULAR STEEL	8	GALVANISED	TUBULAR
46101807	DONCASTER ROAD	Scunthorpe	488300.83	411223.46	26FP	7025	00197541	01/04/2010 00:00	6	3	LESS THAN 30MPH	VERGE	500	SINGLE ARM	NOT APPLICABLE	RIGID COLUMN	URBIS	AXIA 2 S1	VALMONT ST	SHEET STEEL	8	GALVANISED	THAMES
46101807	DONCASTER ROAD	Scunthorpe	488274.61	411221.05	27	7026	00197542	01/04/2005 00:00	6	3	LESS THAN 30MPH	VERGE	1000	SINGLE ARM	NOT APPLICABLE	RIGID COLUMN	URBIS	AXIA 2 S1	PETITJEAN	SHEET STEEL	8	GALVANISED	THAMES
46101807	DONCASTER ROAD	Scunthorpe	488248.02	411229.65	28	7027	00197543	01/04/2005 00:00	6	3	LESS THAN 30MPH	VERGE	1000	SINGLE ARM	NOT APPLICABLE	RIGID COLUMN	URBIS	AXIA 2 S1	PETITJEAN	SHEET STEEL	8	GALVANISED	THAMES
46101807	DONCASTER ROAD	Scunthorpe	488223.89	411214.3	29	7028	00197544	01/04/2005 00:00	6	3	LESS THAN 30MPH	VERGE	1000	SINGLE ARM	NOT APPLICABLE	RIGID COLUMN	URBIS	AXIA 2 S1	PETITJEAN	SHEET STEEL	8	GALVANISED	THAMES
46101807	DONCASTER ROAD	Scunthorpe	489094.06	411306.04	3	7002	00197518	01/04/1977 00:00	6	3	LESS THAN 30MPH	BACK OF FOOTPATH	1500	SINGLE ARM	DARK GREY	RIGID COLUMN	URBIS	AXIA 2 S1	PETITJEAN	SHEET STEEL	12	PAINTED	THAMES
46101807	DONCASTER ROAD	Scunthorpe	488192.67	411223.04	30	7029	00197545	01/04/2005 00:00	6	3	LESS THAN 30MPH	VERGE	1000	SINGLE ARM	NOT APPLICABLE	RIGID COLUMN	URBIS	AXIA 2 S1	PETITJEAN	SHEET STEEL	8	GALVANISED	THAMES
46101807	DONCASTER ROAD	Scunthorpe	488170.34	411207.73	31	7030	00197546	01/04/2005 00:00	6	3	LESS THAN 30MPH	FRONT OF FOOTPATH	1000	SINGLE ARM	NOT APPLICABLE	RIGID COLUMN	URBIS	AXIA 2 S1	PETITJEAN	SHEET STEEL	8	GALVANISED	THAMES
46101807	DONCASTER ROAD	Scunthorpe	488156.82	411219.28	32	7031	00197547	01/04/2005 00:00	6	3	LESS THAN 30MPH	VERGE	1000	SINGLE ARM	NOT APPLICABLE	RIGID COLUMN	URBIS	AXIA 2 S1	PETITJEAN	SHEET STEEL	8	GALVANISED	THAMES
46101807	DONCASTER ROAD	Scunthorpe	488134.04	411204.5	33	7032	00197548	01/04/2005 00:00	6	3	LESS THAN 30MPH	VERGE	1000	SINGLE ARM	NOT APPLICABLE	RIGID COLUMN	URBIS	AXIA 2 S1	PETITJEAN	SHEET STEEL	8	GALVANISED	THAMES
46101807	DONCASTER ROAD	Scunthorpe	488103.2	411213.08	34	7033	00197549	01/04/2005 00:00	6	3	BETWEEN 30-50 MPH	VERGE	1000	SINGLE ARM	NOT APPLICABLE	RIGID COLUMN	URBIS	AXIA 2 S1	PETITJEAN	SHEET STEEL	8	GALVANISED	THAMES
46101807	DONCASTER ROAD	Scunthorpe	488067.61	411198.23	35	7034	00197550	01/04/1970 00:00	6	3	BETWEEN 30-50 MPH	VERGE	500	SINGLE ARM	NOT APPLICABLE	RIGID COLUMN	URBIS	AXIA 2 S1	MALLATITE	TUBULAR STEEL	8	GALVANISED	TUBULAR
46101807	DONCASTER ROAD	Scunthorpe	488030.25	411203.35	36	7035	00197551	01/04/1970 00:00	6	3	BETWEEN 30-50 MPH	VERGE	500	SINGLE ARM	NOT APPLICABLE	RIGID COLUMN	URBIS	AXIA 2 S1	MALLATITE	TUBULAR STEEL	8	GALVANISED	TUBULAR
46101807	DONCASTER ROAD	Scunthorpe	488002.91	411191.79	37	7036	00197552	15/08/2019 00:00	6	3	BETWEEN 30-50 MPH	VERGE	500	SINGLE ARM	NOT APPLICABLE	RIGID COLUMN	URBIS	AXIA 2 S1	MALLATITE	TUBULAR STEEL	8	GALVANISED	TUBULAR
46101807	DONCASTER ROAD	Scunthorpe	487969	411198.57	38	7037	00197553	01/04/1980 00:00	6	3	BETWEEN 30-50 MPH	VERGE	500	SINGLE ARM	NOT APPLICABLE	RIGID COLUMN	URBIS	AXIA 2 S1	PETITJEAN	SHEET STEEL	8	GALVANISED	THAMES
46101807	DONCASTER ROAD	Scunthorpe	487941.1	411188.43	39	7038	00197554	01/04/1980 00:00	6	3	BETWEEN 30-50 MPH	VERGE	500	SINGLE ARM	NOT APPLICABLE	RIGID COLUMN	URBIS	AXIA 2 S1	PETITJEAN	SHEET STEEL	8	GALVANISED	THAMES
46101807	DONCASTER ROAD	Scunthorpe	489054.72	411306.14	4	7003	00197519	01/04/1977 00:00	6	3	LESS THAN 30MPH	FRONT OF FOOTPATH	1250	SINGLE ARM	DARK GREY	RIGID COLUMN	URBIS	AXIA 2 S1	PETITJEAN	SHEET STEEL	12	PAINTED	THAMES
46101807	DONCASTER ROAD	Scunthorpe	487909.47	411195.84	40	7039	00197555	01/04/2011 00:00	6	3	BETWEEN 30-50 MPH	VERGE	1000	SINGLE ARM	NOT APPLICABLE	RIGID COLUMN	URBIS	AXIA 2 S1	VALMONT ST	SHEET STEEL	8	GALVANISED	THAMES
46101807	DONCASTER ROAD	Scunthorpe	487882.99	411186.65	41	7040	00197556	01/04/2011 00:00	6	3	BETWEEN 30-50 MPH	VERGE	1000	SINGLE ARM	NOT APPLICABLE	RIGID COLUMN	URBIS	AXIA 2 S1	VALMONT ST	SHEET STEEL	8	GALVANISED	THAMES
46101807	DONCASTER ROAD	Scunthorpe	487863.08	411197.87	42	7041	00197557	01/04/2011 00:00	6	3	BETWEEN 30-50 MPH	VERGE	1000	SINGLE ARM	NOT APPLICABLE	RIGID COLUMN	URBIS	AXIA 2 S1	VALMONT ST	SHEET STEEL	8	GALVANISED	THAMES
46101807	DONCASTER ROAD	Scunthorpe	487837.16	411187.85	43	7042	00197558	01/04/2011 00:00	6	3	BETWEEN 30-50 MPH	VERGE	1000	SINGLE ARM	NOT APPLICABLE	RIGID COLUMN	URBIS	AXIA 2 S1	VALMONT ST	SHEET STEEL	8	GALVANISED	THAMES
46101807	DONCASTER ROAD	Scunthorpe	487802.18	411198.96	44	7043	00197559	01/04/2005 00:00	6	3	BETWEEN 30-50 MPH	VERGE	500	SINGLE ARM	NOT APPLICABLE	RIGID COLUMN	URBIS	AXIA 2 S1	VALMONT ST	SHEET STEEL	8	GALVANISED	THAMES
46101807	DONCASTER ROAD	Scunthorpe	487767.32	411190.75	45	7044	00197560	01/04/1970 00:00	6	3	BETWEEN 30-50 MPH	VERGE	500	SINGLE ARM	NOT APPLICABLE	RIGID COLUMN	URBIS	AXIA 2 S1	MALLATITE	TUBULAR STEEL	8	GALVANISED	TUBULAR
46101807	DONCASTER ROAD	Scunthorpe	487730.4	411201.78	46	7045	00197561	01/04/2005 00:00	6	3	BETWEEN 30-50 MPH	VERGE	500	SINGLE ARM	NOT APPLICABLE	RIGID COLUMN	URBIS	AXIA 2 S1	VALMONT ST	SHEET STEEL	8	GALVANISED	THAMES
46101807	DONCASTER ROAD	Scunthorpe	487698.71	411193.23	47	7046	00197562	01/04/1990 00:00	6	3	BETWEEN 30-50 MPH	VERGE	1000	SINGLE ARM	NOT APPLICABLE	RIGID COLUMN	URBIS	AXIA 2 S1	PETITJEAN	SHEET STEEL	8	GALVANISED	THAMES
46101807	DONCASTER ROAD	Scunthorpe	487672.64	411193.7	48	7047	00197563	01/04/1977 00:00	6	3	BETWEEN 30-50 MPH	VERGE	1000	SINGLE ARM	NOT APPLICABLE	RIGID COLUMN	URBIS	AXIA 2 S1	PETITJEAN	SHEET STEEL	8	GALVANISED	THAMES
46101807	DONCASTER ROAD	Scunthorpe	487653.34	411204.43	49FP	7048	00197564	01/04/2005 00:00	6	3	BETWEEN 30-50 MPH	VERGE	1000	SINGLE ARM	NOT APPLICABLE	RIGID COLUMN	URBIS	AXIA 2 S1	PETITJEAN	SHEET STEEL	8	GALVANISED	THAMES
46101807	DONCASTER ROAD	Scunthorpe	489024.81	411316.11	5	7004	00197520	01/04/1977 00:00	6	3	LESS THAN 30MPH	FRONT OF FOOTPATH	1250	SINGLE ARM	DARK GREY	RIGID COLUMN	URBIS	AXIA 2 S1	PETITJEAN	SHEET STEEL	12	PAINTED	THAMES
46101807	DONCASTER ROAD	Scunthorpe	487629.1	411194.56	50	7049	00197565	01/04/2005 00:00	6	3	BETWEEN 30-50 MPH	VERGE	2000	SINGLE ARM	NOT APPLICABLE	RIGID COLUMN	URBIS	AXIA 2 S1	PETITJEAN	SHEET STEEL	8	GALVANISED	THAMES
46101807	DONCASTER ROAD	Scunthorpe	487606.02	411196.27	51	7050	00197566	01/04/2005 00:00	6	3	BETWEEN 30-50 MPH	VERGE	2000	SINGLE ARM	NOT APPLICABLE	RIGID COLUMN	URBIS	AXIA 2 S1	PETITJEAN	SHEET STEEL	8	GALVANISED	THAMES
46101807	DONCASTER ROAD	Scunthorpe	487580.61	411206.54	52FP	7051	00197567	01/04/2005 00:00	6	3	BETWEEN 30-50 MPH	VERGE	1000	SINGLE ARM	NOT APPLICABLE	RIGID COLUMN	URBIS	AXIA 2 S1	PETITJEAN	SHEET STEEL	8	GALVANISED	THAMES
46101807	DONCASTER ROAD	Scunthorpe	487558.45	411207.73	53	7052	00197568	01/04/2005 00:00	6	3	BETWEEN 30-50 MPH	VERGE	1000	SINGLE ARM	NOT APPLICABLE	RIGID COLUMN	URBIS	AXIA 2 S1	PETITJEAN	SHEET STEEL	8	GALVANISED	THAMES
46101807	DONCASTER ROAD	Scunthorpe	487530.32	411197.68	54	7053	00197569	01/04/1980 00:00	6	3	BETWEEN 30-50 MPH	VERGE	1500	SINGLE ARM	NOT APPLICABLE	RIGID COLUMN	URBIS	AXIA 2 S1	PETITJEAN	SHEET STEEL	8	GALVANISED	THAMES
46101807	DONCASTER ROAD	Scunthorpe	487500	411209.27	55	7054	00197570	01/04/2011 00:00	6	3	BETWEEN 30-50 MPH	VERGE	1000	SINGLE ARM	NOT APPLICABLE	RIGID COLUMN	URBIS	AXIA 2 S1	VALMONT ST	SHEET STEEL	8	GALVANISED	THAMES
46101807	DONCASTER ROAD	Scunthorpe	487468.66	411199.21	56	7055	00197571	01/04/2011 00:00	6	3	BETWEEN 30-50 MPH	VERGE	500	SINGLE ARM	NOT APPLICABLE	RIGID COLUMN	URBIS	AXIA 2 S1	VALMONT ST	SHEET STEEL	8	GALVANISED	THAMES
46101807	DONCASTER ROAD	Scunthorpe	487434.17	411209.26	57	7056	00197572	01/04/2011 00:00	6	3	BETWEEN 30-50 MPH	VERGE	500	SINGLE ARM	NOT APPLICABLE	RIGID COLUMN	URBIS	AXIA 2 S1	VALMONT ST	SHEET STEEL	8	GALVANISED	THAMES
46101807	DONCASTER ROAD	Scunthorpe	487402.89	411198.69	58FP	7057	00197573	01/04/2011 00:00	6	3	BETWEEN 30-50 MPH	VERGE	500	SINGLE ARM	NOT APPLICABLE	RIGID COLUMN	URBIS	AXIA 2 S1	VALMONT ST	SHEET STEEL	8	GALVANISED	THAMES
46101807	DONCASTER ROAD	Scunthorpe	487369.21	411208.08	59	7058	00197574	01/04/2011 00:00	6	3	BETWEEN 30-50 MPH	VERGE	500	SINGLE ARM	NOT APPLICABLE	RIGID COLUMN	URBIS	AXIA 2 S1	VALMONT ST	SHEET STEEL	8	GALVANISED	THAMES
46101807	DONCASTER ROAD	Scunthorpe	488985.39	411298.53	6	7005	00197521	19/08/2019 00:00	6	3	LESS THAN 30MPH	FRONT OF FOOTPATH	1000	SINGLE ARM	NOT APPLICABLE	RIGID COLUMN	URBIS	AXIA 2 S1	MALLATITE	TUBULAR STEEL	12	GALVANISED	TUBULAR
46101807	DONCASTER ROAD	Scunthorpe	487334.68	411209.13	60	7059	00197575	01/04/1970 00:00	6	3	BETWEEN 30-50 MPH	VERGE	500	SINGLE ARM	NOT APPLICABLE	RIGID COLUMN	URBIS	AXIA 2 S1	MALLATITE	TUBULAR STEEL	8	GALVANISED	TUBULAR
46101807	DONCASTER ROAD	Scunthorpe	487308.05	411196.56	61FP	7060	00197576	01/04/1970 00:00	6	3	BETWEEN 30-50 MPH	VERGE	500	SINGLE ARM	NOT APPLICABLE	RIGID COLUMN	URBIS	AXIA 2 S1	MALLATITE	TUBULAR STEEL	8	GALVANISED	TUBULAR
46101807	DONCASTER ROAD	Scunthorpe	487283.81	411212.94	62	7061	00197577	01/04/1980 00:00	6	3	BETWEEN 30-50 MPH	VERGE	1000	SINGLE ARM	NOT APPLICABLE	RIGID COLUMN	URBIS	AXIA 2 S1	PETITJEAN	SHEET STEEL	8	GALVANISED	THAMES
46101807	DONCASTER ROAD	Scunthorpe	487190.99	411190.06	63	7062	00197578	01/04/1977 00:00	6	3	BETWEEN 30-50 MPH	FRONT OF FOOTPATH	1250	SINGLE ARM	MID GREY	RIGID COLUMN	URBIS	AXIA 2 S1	PETITJEAN	SHEET STEEL	12	PAINTED	THAMES
46101807	DONCASTER ROAD	Scunthorpe	487192.06	411214.79	64FP	7063	00197579	01/04/1977 00:00	6	3	BETWEEN 30-50 MPH	BACK OF FOOTPATH	1250	SINGLE ARM	NOT APPLICABLE	RIGID COLUMN	URBIS	AXIA 2 S1	PETITJEAN	SHEET STEEL	12	GALVANISED	THAMES
46101807	DONCASTER ROAD	Scunthorpe	487142.63	411187.96	65	7064	00197580	01/04/1980 00:00	6	3	BETWEEN 30-50 MPH	FRONT OF FOOTPATH	1250	SINGLE ARM	MID GREY	RIGID COLUMN	URBIS	AXIA 2 S1	PETITJEAN	SHEET STEEL	12	PAINTED	THAMES
46101807	DONCASTER ROAD	Scunthorpe	487138.33	411206.24	66	7065	00197581	01/04/1980 00:00	6	3	BETWEEN 30-50 MPH	BACK OF FOOTPATH	1000	SINGLE ARM	MID GREY	RIGID COLUMN	URBIS	AXIA 2 S1	PETITJEAN	SHEET STEEL	12	PAINTED	THAMES
46101807	DONCASTER ROAD	Scunthorpe	487098.58	411180.9	67	7066	00197582	01/04/1980 00:00	6	3	BETWEEN 30-50 MPH	FRONT OF FOOTPATH	1250	SINGLE ARM	MID GREY	RIGID COLUMN	URBIS	AXIA 2 S1	PETITJEAN	SHEET STEEL	12	PAINTED	THAMES
46101807	DONCASTER ROAD	Scunthorpe	487090.49	411253.61	68	7067	00197583	01/04/1980 00:00	6	3	BETWEEN 30-50 MPH	BACK OF FOOTPATH	1250	SINGLE ARM	MID GREY	RIGID COLUMN	URBIS	AXIA 2 S1	PETITJEAN	SHEET STEEL	12	PAINTED	THAMES
46101807	DONCASTER ROAD	Scunthorpe	487033.04	411162.42	69	7068	00197584	01/04/1980 00:00	6	3	BETWEEN 30-50 MPH	BACK OF FOOTPATH	1250	SINGLE ARM	NOT APPLICABLE	RIGID COLUMN	URBIS	AXIA 2 S1	PETITJEAN	SHEET STEEL	12	GALVANISED	THAMES
46101807	DONCASTER ROAD	Scunthorpe	488945.97	411306.54	7	7006	00197522	01/04/1977 00:00	6	3	LESS THAN 30MPH	FRONT OF FOOTPATH	1250	SINGLE ARM	DARK GREY	RIGID COLUMN	URBIS	AXIA 2 S1	PETITJEAN	SHEET STEEL	12	PAINTED	THAMES
46101807	DONCASTER ROAD	Scunthorpe	487034.65	411182.31	70	7069	00197585	13/06/2019 00:00	6	3	BETWEEN 30-50 MPH	VERGE	1250	SINGLE ARM	NOT APPLICABLE	RIGID COLUMN	URBIS	AXIA 2 S1	MALLATITE	TUBULAR STEEL	12	GALVANISED	TUBULAR
46101807	DONCASTER ROAD	Scunthorpe	488921.31	411291.91	8	7007	00197523	01/04/1977 00:00	6	3	LESS THAN 30MPH	FRONT OF FOOTPATH	1250	SINGLE ARM	DARK GREY	RIGID COLUMN	URBIS	AXIA 2 S1	PETITJEAN	SHEET STEEL	12	PAINTED	THAMES
46101807	DONCASTER ROAD	Scunthorpe	488889.2	411305.44	9	7008	00197524	01/04/1977 00:00	6	3	LESS THAN 30MPH	BACK OF FOOTPATH	2000	SINGLE ARM	NOT APPLICABLE	RIGID COLUMN	URBIS	AXIA 2 S1	PETITJEAN	SHEET STEEL	12	GALVANISED	THAMES
46101808	DORSET CLOSE EAST	Burton upon Stather Parish	487550.12	417857.96	1	7000

46101821	EUROPA WAY	Brigg Parish	499451.21	407844.18	7	7006	00197753	01/04/1990 00:00	2	3	LESS THAN 30MPH	BACK OF FOOTPATH	1000	SINGLE ARM	MID GREY	RIGID COLUMN	URBIS	AXIA 2 S1	PETITJEAN	SHEET STEEL	8	PAINTED	THAMES
46101821	EUROPA WAY	Brigg Parish	499424.85	407830.37	8	7007	00197754	01/04/1990 00:00	2	3	LESS THAN 30MPH	BACK OF FOOTPATH	1000	SINGLE ARM	MID GREY	RIGID COLUMN	URBIS	AXIA 2 S1	PETITJEAN	SHEET STEEL	8	PAINTED	THAMES
46101821	EUROPA WAY	Brigg Parish	499403.96	407806.68	9	7008	00197755	01/04/1990 00:00	2	3	LESS THAN 30MPH	BACK OF FOOTPATH	1000	SINGLE ARM	MID GREY	RIGID COLUMN	URBIS	AXIA 2 S1	PETITJEAN	SHEET STEEL	8	PAINTED	THAMES
46101822	EVEREST ROAD	Scunthorpe	490195.61	408642.69	1	7000	00197757	01/04/1987 00:00	1	3	LESS THAN 30MPH	BACK OF FOOTPATH	1250	SINGLE ARM	NOT APPLICABLE	RIGID COLUMN	URBIS	AXIA 2 S1	PETITJEAN	SHEET STEEL	8	GALVANISED	THAMES
46101822	EVEREST ROAD	Scunthorpe	490209.61	408428.68	10	7009	00197766	01/04/1980 00:00	1	3	LESS THAN 30MPH	BACK OF FOOTPATH	300	SINGLE ARM	LIGHT GREY	RIGID COLUMN	URBIS	AXIA 2 S1	PETITJEAN	SHEET STEEL	5	PAINTED	DAER
46101822	EVEREST ROAD	Scunthorpe	490245.87	408420.38	11FP	7010	00197767	01/04/1987 00:00	1	3	LESS THAN 30MPH	BACK OF FOOTPATH	1500	SINGLE ARM	LIGHT GREY	RIGID COLUMN	URBIS	AXIA 2 S1	PETITJEAN	SHEET STEEL	8	PAINTED	THAMES
46101822	EVEREST ROAD	Scunthorpe	490211.8	408389.53	12	7011	00197768	01/04/1980 00:00	1	3	LESS THAN 30MPH	BACK OF FOOTPATH	300	SINGLE ARM	LIGHT GREY	RIGID COLUMN	URBIS	AXIA 2 S1	PETITJEAN	SHEET STEEL	5	PAINTED	DAER
46101822	EVEREST ROAD	Scunthorpe	490259.23	408390.02	13FP	7012	00197769	01/04/1987 00:00	1	3	LESS THAN 30MPH	BACK OF FOOTPATH	1500	SINGLE ARM	LIGHT GREY	RIGID COLUMN	URBIS	AXIA 2 S1	PETITJEAN	SHEET STEEL	8	PAINTED	THAMES
46101822	EVEREST ROAD	Scunthorpe	490247.7	408361.48	14	7013	00197770	01/04/1987 00:00	1	3	LESS THAN 30MPH	BACK OF FOOTPATH	1500	SINGLE ARM	LIGHT GREY	RIGID COLUMN	URBIS	AXIA 2 S1	PETITJEAN	SHEET STEEL	8	PAINTED	THAMES
46101822	EVEREST ROAD	Scunthorpe	490260.57	408331.9	15FP	7014	00197771	01/04/1987 00:00	1	3	LESS THAN 30MPH	BACK OF FOOTPATH	1500	SINGLE ARM	LIGHT GREY	RIGID COLUMN	URBIS	AXIA 2 S1	PETITJEAN	SHEET STEEL	8	PAINTED	THAMES
46101822	EVEREST ROAD	Scunthorpe	490248.88	408305.12	16	7015	00197772	01/04/1987 00:00	1	3	LESS THAN 30MPH	BACK OF FOOTPATH	1500	SINGLE ARM	LIGHT GREY	RIGID COLUMN	URBIS	AXIA 2 S1	PETITJEAN	SHEET STEEL	8	PAINTED	THAMES
46101822	EVEREST ROAD	Scunthorpe	490262.2	408278.2	17	7016	00197773	01/04/1987 00:00	1	3	LESS THAN 30MPH	BACK OF FOOTPATH	1500	SINGLE ARM	LIGHT GREY	RIGID COLUMN	URBIS	AXIA 2 S1	PETITJEAN	SHEET STEEL	8	PAINTED	THAMES
46101822	EVEREST ROAD	Scunthorpe	490251.43	408249.83	18	7017	00197774	01/04/1987 00:00	1	3	LESS THAN 30MPH	BACK OF FOOTPATH	1500	SINGLE ARM	LIGHT GREY	RIGID COLUMN	URBIS	AXIA 2 S1	PETITJEAN	SHEET STEEL	8	PAINTED	THAMES
46101822	EVEREST ROAD	Scunthorpe	490264	408234.75	19	7018	00197775	01/04/1987 00:00	1	3	LESS THAN 30MPH	BACK OF FOOTPATH	1500	SINGLE ARM	LIGHT GREY	RIGID COLUMN	URBIS	AXIA 2 S1	PETITJEAN	SHEET STEEL	8	PAINTED	THAMES
46101822	EVEREST ROAD	Scunthorpe	490183.46	408623.26	2	7001	00197758	01/04/1987 00:00	1	3	LESS THAN 30MPH	BACK OF FOOTPATH	1500	SINGLE ARM	LIGHT GREY	RIGID COLUMN	URBIS	AXIA 2 S1	PETITJEAN	SHEET STEEL	8	PAINTED	THAMES
46101822	EVEREST ROAD	Scunthorpe	490254.03	408213.04	20	7019	00197776	01/04/1987 00:00	1	3	LESS THAN 30MPH	BACK OF FOOTPATH	1500	SINGLE ARM	LIGHT GREY	RIGID COLUMN	URBIS	AXIA 2 S1	PETITJEAN	SHEET STEEL	8	PAINTED	THAMES
46101822	EVEREST ROAD	Scunthorpe	490258.03	408185.99	21	7020	00197777	01/04/1987 00:00	1	3	LESS THAN 30MPH	BACK OF FOOTPATH	1500	SINGLE ARM	LIGHT GREY	RIGID COLUMN	URBIS	AXIA 2 S1	PETITJEAN	SHEET STEEL	8	PAINTED	THAMES
46101822	EVEREST ROAD	Scunthorpe	490272.03	408170.55	22	7021	00197778	01/04/1987 00:00	1	3	LESS THAN 30MPH	BACK OF FOOTPATH	1500	SINGLE ARM	LIGHT GREY	RIGID COLUMN	URBIS	AXIA 2 S1	PETITJEAN	SHEET STEEL	8	PAINTED	THAMES
46101822	EVEREST ROAD	Scunthorpe	490265.83	408142.37	23	7022	00197779	01/04/1987 00:00	1	3	LESS THAN 30MPH	BACK OF FOOTPATH	1500	SINGLE ARM	LIGHT GREY	RIGID COLUMN	URBIS	AXIA 2 S1	PETITJEAN	SHEET STEEL	8	PAINTED	THAMES
46101822	EVEREST ROAD	Scunthorpe	490274.79	408112.69	24FP	7023	00197780	01/04/1987 00:00	1	3	LESS THAN 30MPH	BACK OF FOOTPATH	1500	SINGLE ARM	LIGHT GREY	RIGID COLUMN	URBIS	AXIA 2 S1	PETITJEAN	SHEET STEEL	8	PAINTED	THAMES
46101822	EVEREST ROAD	Scunthorpe	490293.6	408097.3	25FP	7024	00197781	01/04/1987 00:00	1	3	LESS THAN 30MPH	BACK OF FOOTPATH	1500	SINGLE ARM	LIGHT GREY	RIGID COLUMN	URBIS	AXIA 2 S1	PETITJEAN	SHEET STEEL	8	PAINTED	THAMES
46101822	EVEREST ROAD	Scunthorpe	490289.65	408072.16	26FP	7025	00197782	01/04/1987 00:00	1	3	LESS THAN 30MPH	BACK OF FOOTPATH	1500	SINGLE ARM	LIGHT GREY	RIGID COLUMN	URBIS	AXIA 2 S1	PETITJEAN	SHEET STEEL	8	PAINTED	THAMES
46101822	EVEREST ROAD	Scunthorpe	490300.42	408044.87	27	7026	00197783	01/04/1987 00:00	1	3	LESS THAN 30MPH	BACK OF FOOTPATH	1500	SINGLE ARM	LIGHT GREY	RIGID COLUMN	URBIS	AXIA 2 S1	PETITJEAN	SHEET STEEL	8	PAINTED	THAMES
46101822	EVEREST ROAD	Scunthorpe	490188.47	408599.23	3	7002	00197759	01/04/1987 00:00	1	3	LESS THAN 30MPH	BACK OF FOOTPATH	1500	SINGLE ARM	LIGHT GREY	RIGID COLUMN	URBIS	AXIA 2 S1	PETITJEAN	SHEET STEEL	8	PAINTED	THAMES
46101822	EVEREST ROAD	Scunthorpe	490200.39	408570.85	4	7003	00197760	01/04/1987 00:00	1	3	LESS THAN 30MPH	BACK OF FOOTPATH	1500	SINGLE ARM	LIGHT GREY	RIGID COLUMN	URBIS	AXIA 2 S1	PETITJEAN	SHEET STEEL	8	PAINTED	THAMES
46101822	EVEREST ROAD	Scunthorpe	490217.94	408545.55	5	7004	00197761	01/04/1987 00:00	1	3	LESS THAN 30MPH	BACK OF FOOTPATH	1500	SINGLE ARM	LIGHT GREY	RIGID COLUMN	URBIS	AXIA 2 S1	PETITJEAN	SHEET STEEL	8	PAINTED	THAMES
46101822	EVEREST ROAD	Scunthorpe	490240.54	408533.32	6	7005	00197762	01/04/1987 00:00	1	3	LESS THAN 30MPH	BACK OF FOOTPATH	1500	SINGLE ARM	LIGHT GREY	RIGID COLUMN	URBIS	AXIA 2 S1	PETITJEAN	SHEET STEEL	8	PAINTED	THAMES
46101822	EVEREST ROAD	Scunthorpe	490251.11	408504.81	7	7006	00197763	01/04/1987 00:00	1	3	LESS THAN 30MPH	BACK OF FOOTPATH	1500	SINGLE ARM	LIGHT GREY	RIGID COLUMN	URBIS	AXIA 2 S1	PETITJEAN	SHEET STEEL	8	PAINTED	THAMES
46101822	EVEREST ROAD	Scunthorpe	490255.22	408480.71	8	7007	00197764	01/04/1987 00:00	1	3	LESS THAN 30MPH	BACK OF FOOTPATH	1500	SINGLE ARM	LIGHT GREY	RIGID COLUMN	URBIS	AXIA 2 S1	PETITJEAN	SHEET STEEL	8	PAINTED	THAMES
46101822	EVEREST ROAD	Scunthorpe	490256.49	408445.87	9FP	7008	00197765	01/04/1987 00:00	1	3	LESS THAN 30MPH	BACK OF FOOTPATH	1500	SINGLE ARM	LIGHT GREY	RIGID COLUMN	URBIS	AXIA 2 S1	PETITJEAN	SHEET STEEL	8	PAINTED	THAMES
46101823	FERRIBY ROAD	Barton upon Humber Parish	502832.35	422053.48	1	7022	00197806	01/04/1985 00:00	5	2	LESS THAN 30MPH	BACK OF FOOTPATH	1250	SINGLE ARM	NOT APPLICABLE	RIGID COLUMN	URBIS	AXIA 2 S1	PETITJEAN	SHEET STEEL	10	GALVANISED	THAMES
46101823	FERRIBY ROAD	Barton upon Humber Parish	502558.69	421858.52	10	7031	00197815	01/04/1985 00:00	5	2	LESS THAN 30MPH	BACK OF FOOTPATH	1250	SINGLE ARM	MID GREY	RIGID COLUMN	URBIS	AXIA 2 S1	PETITJEAN	SHEET STEEL	10	PAINTED	THAMES
46101823	FERRIBY ROAD	Barton upon Humber Parish	501926.75	421549.4	10X	7009	00197793	01/04/1978 00:00	5	2	GREATER THAN 50MPH	VERGE	1000	SINGLE ARM	MID GREY	RIGID COLUMN	URBIS	AXIA 2 S1	CU	SHEET STEEL	10	PAINTED	MOTORWAY
46101823	FERRIBY ROAD	Barton upon Humber Parish	502524.19	421840.55	11	7032	00197816	01/04/1985 00:00	5	2	LESS THAN 30MPH	BACK OF FOOTPATH	1250	SINGLE ARM	MID GREY	RIGID COLUMN	URBIS	AXIA 2 S1	PETITJEAN	SHEET STEEL	10	PAINTED	THAMES
46101823	FERRIBY ROAD	Barton upon Humber Parish	501910.39	421576.52	11X	7010	00197794	01/04/1978 00:00	5	2	GREATER THAN 50MPH	SPLITTER ISLAND	1000	SINGLE ARM	MID GREY	RIGID COLUMN	URBIS	AXIA 2 S1	CU	SHEET STEEL	10	PAINTED	MOTORWAY
46101823	FERRIBY ROAD	Barton upon Humber Parish	502489.05	421822.31	12	7033	00197817	01/04/1985 00:00	5	2	LESS THAN 30MPH	BACK OF FOOTPATH	1250	SINGLE ARM	MID GREY	RIGID COLUMN	URBIS	AXIA 2 S1	PETITJEAN	SHEET STEEL	10	PAINTED	THAMES
46101823	FERRIBY ROAD	Barton upon Humber Parish	501895.82	421605.33	12X	7011	00197795	01/04/1978 00:00	5	2	GREATER THAN 50MPH	VERGE	1000	SINGLE ARM	MID GREY	RIGID COLUMN	URBIS	AXIA 2 S1	CU	SHEET STEEL	10	PAINTED	MOTORWAY
46101823	FERRIBY ROAD	Barton upon Humber Parish	502454.17	421809.7	13	7034	00197818	21/11/2020 00:00	5	2	LESS THAN 30MPH	BACK OF FOOTPATH	1000	SINGLE ARM	NOT APPLICABLE	RIGID COLUMN	URBIS	AXIA 2 S1	MALLATITE	TUBULAR STEEL	10	GALVANISED	TUBULAR
46101823	FERRIBY ROAD	Barton upon Humber Parish	501899.01	421632.86	13X	7012	00197796	01/04/1978 00:00	5	2	GREATER THAN 50MPH	VERGE	1000	SINGLE ARM	MID GREY	RIGID COLUMN	URBIS	AXIA 2 S1	CU	SHEET STEEL	10	PAINTED	MOTORWAY
46101823	FERRIBY ROAD	Barton upon Humber Parish	502415.14	421799.98	14	7035	00197819	21/11/2020 00:00	5	2	LESS THAN 30MPH	BACK OF FOOTPATH	1000	SINGLE ARM	NOT APPLICABLE	RIGID COLUMN	URBIS	AXIA 2 S1	MALLATITE	TUBULAR STEEL	10	GALVANISED	TUBULAR
46101823	FERRIBY ROAD	Barton upon Humber Parish	501912.37	421656.86	14X	7013	00197797	01/04/1978 00:00	5	2	GREATER THAN 50MPH	BACK OF FOOTPATH	1000	SINGLE ARM	MID GREY	RIGID COLUMN	URBIS	AXIA 2 S1	CU	SHEET STEEL	10	PAINTED	MOTORWAY
46101823	FERRIBY ROAD	Barton upon Humber Parish	502379.34	421784.86	15	7036	00197820	21/11/2020 00:00	5	2	LESS THAN 30MPH	BACK OF FOOTPATH	1000	SINGLE ARM	NOT APPLICABLE	RIGID COLUMN	URBIS	AXIA 2 S1	MALLATITE	TUBULAR STEEL	10	GALVANISED	TUBULAR
46101823	FERRIBY ROAD	Barton upon Humber Parish	501932.31	421676.8	15X	7014	00197798	01/04/1978 00:00	5	2	GREATER THAN 50MPH	BACK OF FOOTPATH	1000	SINGLE ARM	MID GREY	RIGID COLUMN	URBIS	AXIA 2 S1	CU	SHEET STEEL	10	PAINTED	MOTORWAY
46101823	FERRIBY ROAD	Barton upon Humber Parish	502348.87	421762.09	16	7037	00197821	01/04/1985 00:00	5	2	LESS THAN 30MPH	BACK OF FOOTPATH	1250	SINGLE ARM	MID GREY	RIGID COLUMN	URBIS	AXIA 2 S1	PETITJEAN	SHEET STEEL	10	PAINTED	THAMES
46101823	FERRIBY ROAD	Barton upon Humber Parish	501960.88	421688.06	16X	7015	00197799	01/04/1978 00:00	5	2	GREATER THAN 50MPH	BACK OF FOOTPATH	1000	SINGLE ARM	MID GREY	RIGID COLUMN	URBIS	AXIA 2 S1	CU	SHEET STEEL	10	PAINTED	MOTORWAY
46101823	FERRIBY ROAD	Barton upon Humber Parish	502317.53	421762.67	17	7038	00197822	21/11/2020 00:00	5	2	LESS THAN 30MPH	BACK OF FOOTPATH	1000	SINGLE ARM	NOT APPLICABLE	RIGID COLUMN	URBIS	AXIA 2 S1	MALLATITE	TUBULAR STEEL	10	GALVANISED	TUBULAR
46101823	FERRIBY ROAD	Barton upon Humber Parish	501988.06	421691.94	17X	7016	00197800	01/04/1978 00:00	5	2	GREATER THAN 50MPH	BACK OF FOOTPATH	1000	SINGLE ARM	MID GREY	RIGID COLUMN	URBIS	AXIA 2 S1	CU	SHEET STEEL	10	PAINTED	MOTORWAY
46101823	FERRIBY ROAD	Barton upon Humber Parish	502280.12	421747.86	18	7039	00197823	01/04/1985 00:00	5	2	LESS THAN 30MPH	BACK OF FOOTPATH	1250	SINGLE ARM	NOT APPLICABLE	RIGID COLUMN	URBIS	AXIA 2 S1	PETITJEAN	SHEET STEEL	10	GALVANISED	THAMES
46101823	FERRIBY ROAD	Barton upon Humber Parish	502019.17	421696.33	18X	7017	00197801	01/04/1978 00:00	5	2	GREATER THAN 50MPH	BACK OF FOOTPATH	1000	SINGLE ARM	MID GREY	RIGID COLUMN	URBIS	AXIA 2 S1	CU	SHEET STEEL	10	PAINTED	MOTORWAY
46101823	FERRIBY ROAD	Barton upon Humber Parish	502264.92	421741.59	19FP	7040	00197824	01/04/1985 00:00	5	2	LESS THAN 30MPH	BACK OF FOOTPATH	1250	SINGLE ARM	NOT APPLICABLE	RIGID COLUMN	URBIS	AXIA 2 S1	PETITJEAN	SHEET STEEL	10	GALVANISED	THAMES
46101823	FERRIBY ROAD	Barton upon Humber Parish	502045.62	421701.57	19X	7018	00197802	01/04/1978 00:00	5	2	GREATER THAN 50MPH	BACK OF FOOTPATH	1000	SINGLE ARM	MID GREY	RIGID COLUMN	URBIS	AXIA 2 S1	CU	SHEET STEEL	10	PAINTED	MOTORWAY
46101823	FERRIBY ROAD	Barton upon Humber Parish	502131.66	421637.46	1X	7000	00197784	01/12/2018 00:00	5	2	GREATER THAN 50MPH	VERGE	1500	SINGLE ARM	NOT APPLICABLE	RIGID COLUMN	URBIS	AXIA 2 S1	MALLATITE	TUBULAR STEEL	10	GALVANISED	TUBULAR
46101823	FERRIBY ROAD	Barton upon Humber Parish	502805.54	422035.66	2	7023	00197807	01/04/1985 00:00	5	2	LESS THAN 30MPH	BACK OF FOOTPATH	1250	SINGLE ARM	NOT APPLICABLE	RIGID COLUMN	URBIS	AXIA 2 S1	PETITJEAN	SHEET STEEL	10	GALVANISED	THAMES
46101823	FERRIBY ROAD	Barton upon Humber Parish	502274.07	421725.12	20FP	7041	00197825	01/04/1985 00:00	5	2	LESS THAN 30MPH	FRONT OF FOOTPATH	1250	SINGLE ARM	NOT APPLICABLE	RIGID COLUMN	URBIS	AXIA 2 S1	PETITJEAN	SHEET STEEL	10	GALVANISED	THAMES
46101823	FERRIBY ROAD	Barton upon Humber Parish	502074.7	421700.71	20X	7019	00197803	01/04/1978 00:00	5	2	GREATER THAN 50MPH	FRONT OF FOOTPATH	1000	SINGLE ARM	MID GREY	RIGID COLUMN	URBIS	AXIA 2 S1	CU	SHEET STEEL	10	PAINTED	MOTORWAY
46101823	FERRIBY ROAD	Barton upon Humber Parish	502256.42	421712.08	21FP	7042	00197826	01/04/1985 00:00	5	2	LESS THAN 30MPH	FRONT OF FOOTPATH	1250	SINGLE ARM	NOT APPLICABLE	RIGID COLUMN	URBIS	AXIA 2 S1	PETITJEAN	SHEET STEEL	10	GALVANISED	THAMES
46101823	FERRIBY ROAD	Barton upon Humber Parish	502097.44	421687.54	21X	7020	00197804	01/04/1978 00:00	5	2	GREATER THAN 50MPH	FRONT OF FOOTPATH	1000	SINGLE ARM	MID GREY	RIGID COLUMN	URBIS	AXIA 2 S1	CU	SHEET STEEL	10	PAINTED	MOTORWAY
46101823	FERRIBY ROAD	Barton upon Humber Parish	502244.97	421732.59	22FP	7043	00197827	01/04/1985 00:00	5	2	LESS THAN 30MPH	BACK OF FOOTPATH	1250	SINGLE ARM	NOT APPLICABLE	RIGID COLUMN	URBIS	AXIA 2 S1	PETITJEAN	SHEET STEEL	10	GALVANISED	THAMES
46101823	FERRIBY ROAD	Barton upon Humber Parish	502112.48	421665.98	22X	7021	00197805	01/12/2018 00:00	5	2	GREATER THAN 50MPH	SPLITTER ISLAND	1500	SINGLE ARM	NOT APPLICABLE	RIGID COLUMN	URBIS	AXIA 2 S1	MALLATITE	TUBULAR STEEL	10	GALVANISED	TUBULAR
46101823	FERRIBY ROAD	Barton upon Humber Parish	502225.36	421721.49	23	7044	00197828	01/04/1985 00:00	5	2	LESS THAN 30MPH	BACK OF FOOTPATH	1250	SINGLE ARM	NOT APPLICABLE	RIGID COLUMN	URBIS	AXIA 2 S1	PETITJEAN	SHEET STEEL	10	GALVANISED	THAMES
46101823	FERRIBY ROAD	Barton upon Humber Parish	502129	421654	23X	7063	04200320	01/12/2018 00:00	5	2	GREATER THAN 50MPH	VERGE	1500	SINGLE ARM	NOT APPLICABLE	RIGID COLUMN	URBIS	AXIA 2 S1	MALLATITE	TUBULAR STEEL	10	GALVANISED	TUBULAR
46101823	FERRIBY ROAD	Barton upon Humber Parish	502219.16	421704.8	24	7045	00197829	01/04/1985 00:00	5	2	LESS THAN 30MPH	BACK OF FOOTPATH	1000	SINGLE ARM	MID GREY	RIGID COLUMN	URBIS	AXIA 2 S1	PETITJEAN	SHEET STEEL	10	PAINTED	THAMES
46101823	FERRIBY ROAD	Barton upon Humber Parish	502188.84	421691.64	25	7046	00197830	01/04/1985 00:00	5	2	GREATER THAN 50MPH	VERGE	1250	SINGLE ARM	MID GREY	RIGID COLUMN	URBIS	AXIA 2 S1	PETITJEAN	SHEET STEEL	10	PAINTED	THAMES
46101823	FERRIBY ROAD	Barton upon Humber Parish	502163.57	421678.74	26	7047	00197831	01/04/1978 00:00	5	2	GREATER THAN 50MPH	VERGE	1250	SINGLE ARM	MID GREY	RIGID COLUMN	URBIS	AXIA 2 S1	OTHER	SHEET STEEL	10	PAINTED	OTHER
46101823	FERRIBY ROAD	Barton upon Humber Parish	502144.55	421670.69	27	7048	00197832	01/12/2018 00:00	5	2	GREATER THAN 50MPH	VERGE	1500	SINGLE ARM	NOT APPLICABLE	RIGID COLUMN	URBIS	AXIA 2 S1	MALLATITE	TUBULAR STEEL	10	GALVANISED	TUBULAR
46101823	FERRIBY ROAD	Barton upon Humber Parish	502124.5	421681.23	28	7049	00197833	01/04/1978 00:00	5	2	GREATER THAN 50MPH	FRONT OF FOOTPATH	1250	SINGLE ARM	MID GREY	RIGID COLUMN	URBIS	AXIA 2 S1	OTHER	SHEET STEEL	10	PAINTED	OTHER
46101823	FERRIBY ROAD	Barton upon Humber Parish	501904.49	421553.27	29	7050	00197834	01/04/1978 00:00	5	2	GREATER THAN 50MPH	VERGE	1250	SINGLE ARM	MID GREY	RIGID COLUMN	URBIS	AXIA 2 S1	OTHER	SHEET STEEL	10	PAINTED	OTHER
46101823	FERRIBY ROAD	Barton upon Humber Parish	502133.33	421612.45	2X	7001	00197785	01/12/2018 00:00	5	2	GREATER THAN 50MPH	VERGE	1500	SINGLE ARM	NOT APPLICABLE	RIGID COLUMN	URBIS	AXIA 2 S1	MALLATITE	TUBULAR STEEL	10	GALVANISED	TUBULAR
46101823	FERRIBY ROAD	Barton upon Humber Parish	502774.93	422016.74	3	7024	00197808	28/06/2023 00:00	5	2	LESS THAN 30MPH	BACK OF FOOTPATH	500	SINGLE ARM	NOT APPLICABLE	RIGID COLUMN	URBIS	AXIA 2 S1	MALLATITE	TUBULAR STEEL	10	GALVANISED	TUBULAR
46101823	FERRIBY ROAD	Barton upon Humber Parish	501889.97	421578	30	7051	00197835	01/04/1978 00:00	5	2	GREATER THAN 50MPH	VERGE	1250	SINGLE ARM	MID GREY	RIGID COLUMN	URBIS	AXIA 2 S1	OTHER	SHEET STEEL	10	PAINTED	OTHER
46101823	FERRIBY ROAD	Barton upon Humber Parish	501871.54	421559.86	31	7052	00197836	01/04/1978 00:00	5	2	GREATER THAN 50MPH	VERGE	1250	SINGLE ARM	MID GREY	RIGID COLUMN	URBIS	AXIA 2 S1	OTHER	SHEET STEEL	10	PAINTED	OTHER
46101823	FERRIBY ROAD	Barton upon Humber Parish	501852.72	421540.51	32	7053	00197837	01/04/1989 00:00	5	2	GREATER THAN 50MPH	VERGE	1250	SINGLE ARM	NOT APPLICABLE	RIGID COLUMN	URBIS	AXIA 2 S1	PETITJEAN	SHEET STEEL	10	GALVANISED	THAMES
46101823	FERRIBY ROAD	Barton upon Humber Parish	501825.92	421543.33	33	7054	00197838	01/04/1978 00:00	5	2	GREATER THAN 50MPH	VERGE	1250	SINGLE ARM	MID GREY	RIGID COLUMN	URBIS	AXIA 2 S1	OTHER	SHEET STEEL	10	PAINTED	OTHER
46101823	FERRIBY ROAD	Barton upon Humber Parish	501803.34	421521.28	34	7055	00197839	01/04/1978 00:00	5	2	GREATER THAN 50MPH	VERGE	1250	SINGLE ARM	MID GREY	RIGID COLUMN	URBIS	AXIA 2 S1	OTHER	SHEET STEEL	10	PAINTED	OTHER
46101823	FERRIBY ROAD	Barton upon Humber Parish	501772.72	421520.6	35	7056	00197840	01/04/1978 00:00	5	2	GREATER THAN 50MPH	VERGE	1250	SINGLE ARM	MID GREY	RIGID COLUMN	URBIS	AXIA 2 S1	OTHER	SHEET STEEL	10	PAINTED	OTHER
46101823	FERRIBY ROAD	Barton upon Humber Parish	501750.14	421499.63	36	7057	00197841	01/04/1978 00:00	5	2	GREATER THAN 50MPH	VERGE	1250	SINGLE ARM	MID GREY	RIGID COLUMN	URBIS	AXIA 2 S1	OTHER	SHEET STEEL	10	PAINTED	OTHER
46101823	FERRIBY ROAD	Barton upon Humber Parish	501725.02	421487.93	37	7058	00197842	01/04/1978 00:00	5	2	GREATER THAN 50MPH	BACK OF FOOTPATH	500	SINGLE ARM	NOT APPLICABLE	RIGID COLUMN	URBIS	AXIA 2 S1	MALLATITE	TUBULAR STEEL	10	GALVANISED	TUBULAR
46101823	FERRIBY ROAD	Barton upon Humber Parish	501701.42	421476.99	38	7059	00197843	01/04/1978 00:00	5	2	GREATER THAN 50MPH	VERGE	1250	SINGLE ARM	MID GREY	RIGID COLUMN	URBIS	AXIA 2 S1	OTHER	SHEET STEEL	10	PAINTED	OTHER
46101823	FERRIBY ROAD	Barton upon Humber Parish	501668.17	421482.07	39	7060	00197844	01/04/1978 00:00	5	2	GREATER THAN 50MPH	FRONT OF FOOTPATH	1250	SINGLE ARM	MID GREY	RIGID COLUMN	URBIS	AXIA 2 S1	OTHER	SHEET STEEL	10	PAINTED	OTHER
46101823	FERRIBY ROAD	Barton upon Humber Parish	502121.05	421596.49	3X	7002	00197786	01/12/2018 00:00	5	2	GREATER THAN 50MPH	VERGE	1500	SINGLE ARM	NOT APPLICABLE	RIGID COLUMN	URBIS	AXIA 2 S1	MALLATITE	TUBULAR STEEL	10	GALVANISED	TUBULAR
46101823	FERRIBY ROAD	Barton upon Humber Parish	502737.83	421993.63	4	7025	00197809	28/06/2023 00:00	5	2	LESS THAN 30MPH	BACK OF FOOTPATH	500	SINGLE ARM	NOT APPLICABLE	RIGID COLUMN	URBIS	AXIA 2 S1	MALLATITE	TUBULAR STEEL	10	GALVANISED	TUBULAR
46101823	FERRIBY ROAD	Barton upon Humber Parish	501645.9	421455.53	40	7061	00197845	01/04/1978 00:00	5	2	GREATER THAN 50MPH	VERGE	1250	SINGLE ARM	MID GREY	RIGID COLUMN	URBIS	AXIA 2 S1	OTHER	SHEET STEEL	10	PAINTED	OTHER
46101823	FERRIBY ROAD	Barton upon Humber Parish	501619.02	421445.85	41	7062	00197846	01/04/1978 00:00	5	2	GREATER THAN 50MPH	VERGE	1250	SINGLE ARM	MID GREY	RIGID COLUMN	URBIS	AXIA 2 S1	OTHER	SHEET STEEL	10	PAINTED	OTHER
46101823	FERRIBY ROAD	Barton upon Humber Parish	502100.9	421575.24	4X	7003	00197787	01/12/2018 00:00	5	2	GREATER THAN 50MPH	VERGE	1500	SINGLE ARM	NOT APPLICABLE	RIGID COLUMN	URBIS	AXIA 2 S1	MALLATITE	TUBULAR STEEL	10	GALVANISED	TUBULAR
46101823	FERRIBY ROAD	Barton upon Humber Parish	502702.3	421969.09	5	7026	00197810	01/04/1985 00:00	5	2	LESS THAN 30MPH	BACK OF FOOTPATH	1250	SINGLE ARM	MID GREY	RIGID COLUMN	URBIS	AXIA 2 S1	PETITJEAN	SHEET STEEL	10	PAINTED	THAMES
46101823	FERRIBY ROAD	Barton upon Humber Parish	502071.01	421557.79	5X	7004	00197788	01/12/2018 00:00	5	2	GREATER THAN 50MPH	VERGE	1500	SINGLE ARM	NOT APPLICABLE	RIGID COLUMN	URBIS	AXIA 2 S1	MALLATITE	TUBULAR STEEL	10	GALVANISED	TUBULAR
46101823	FERRIBY ROAD	Barton upon Humber Parish	502670.49	421947.28	6	7027	00197811	01/04/1985 00:00	5	2	LESS THAN 30MPH	BACK OF FOOTPATH	1250	SINGLE ARM	MID GREY	RIGID COLUMN	URBIS	AXIA 2 S1	PETITJEAN	SHEET STEEL	10	PAINTED	THAMES
46101

46101830	FLETCHER CLOSE	Flixborough Parish	487373.84	412745.54	2	7001	00198006	01/04/1992 00:00	2	1	LESS THAN 30MPH	VERGE	0	POST TOP	NOT APPLICABLE	RIGID COLUMN	URBIS	AXIA 2 S1	PETITJEAN	SHEET STEEL	5	GALVANISED	NIDD	
46101830	FLETCHER CLOSE	Flixborough Parish	487353.68	412747.15	3	7002	00198007	01/04/1992 00:00	2	1	LESS THAN 30MPH	VERGE	0	POST TOP	NOT APPLICABLE	RIGID COLUMN	URBIS	AXIA 2 S1	PETITJEAN	SHEET STEEL	5	GALVANISED	NIDD	
46101831	FOWLER COURT	Winterton Parish	492250.58	418621.04	1	7000	00198008	01/04/2001 00:00	1	1	LESS THAN 30MPH	BACK OF FOOTPATH	300	SINGLE ARM	NOT APPLICABLE	RIGID COLUMN	URBIS	AXIA 2 S1	MALLATITE	TUBULAR STEEL	6	GALVANISED	STEPPED TUBULAR	
46101831	FOWLER COURT	Winterton Parish	492230.15	418611.9	2	7002	00198010	01/04/2001 00:00	1	1	LESS THAN 30MPH	BACK OF FOOTPATH	300	SINGLE ARM	NOT APPLICABLE	RIGID COLUMN	URBIS	AXIA 2 S1	MALLATITE	TUBULAR STEEL	6	GALVANISED	STEPPED TUBULAR	
46101831	FOWLER COURT	Winterton Parish	492239.58	418579.71	3	7004	00198012	01/04/2001 00:00	1	1	LESS THAN 30MPH	BACK OF FOOTPATH	300	SINGLE ARM	NOT APPLICABLE	RIGID COLUMN	URBIS	AXIA 2 S1	MALLATITE	TUBULAR STEEL	6	GALVANISED	STEPPED TUBULAR	
46101831	FOWLER COURT	Winterton Parish	492214.31	418582.66	4	7005	00198013	01/04/2001 00:00	1	1	LESS THAN 30MPH	BACK OF FOOTPATH	300	SINGLE ARM	NOT APPLICABLE	RIGID COLUMN	URBIS	AXIA 2 S1	MALLATITE	TUBULAR STEEL	6	GALVANISED	STEPPED TUBULAR	
46101833	GAINSTHORPE ROAD EAST	Hibaldstow Parish	495282.4	401415.2	1	7000	00198014	01/04/2009 00:00	1	3	BETWEEN 30-50 MPH	VERGE	0	POST TOP	NOT APPLICABLE	RIGID COLUMN	URBIS	AXIA 2 S1	MALLATITE	TUBULAR STEEL	6	GALVANISED	TUBULAR	
46101833	GAINSTHORPE ROAD EAST	Hibaldstow Parish	495249.05	401410.12	2FP	7001	00198015	01/04/2009 00:00	1	3	BETWEEN 30-50 MPH	VERGE	0	POST TOP	NOT APPLICABLE	RIGID COLUMN	URBIS	AXIA 2 S1	MALLATITE	TUBULAR STEEL	6	GALVANISED	TUBULAR	
46101833	GAINSTHORPE ROAD EAST	Hibaldstow Parish	495199.38	401407.64	3	7002	00198016	01/04/2009 00:00	1	3	BETWEEN 30-50 MPH	VERGE	0	POST TOP	NOT APPLICABLE	RIGID COLUMN	URBIS	AXIA 2 S1	MALLATITE	TUBULAR STEEL	6	GALVANISED	TUBULAR	
46101833	GAINSTHORPE ROAD EAST	Hibaldstow Parish	495163.96	401404.28	4	7003	00198017	01/04/2009 00:00	1	3	BETWEEN 30-50 MPH	VERGE	0	POST TOP	NOT APPLICABLE	RIGID COLUMN	URBIS	AXIA 2 S1	MALLATITE	TUBULAR STEEL	6	GALVANISED	TUBULAR	
46101833	GAINSTHORPE ROAD EAST	Hibaldstow Parish	495133.02	401400.22	5	7004	00198018	01/04/2009 00:00	1	3	BETWEEN 30-50 MPH	VERGE	0	POST TOP	NOT APPLICABLE	RIGID COLUMN	URBIS	AXIA 2 S1	MALLATITE	TUBULAR STEEL	6	GALVANISED	TUBULAR	
46101833	GAINSTHORPE ROAD EAST	Hibaldstow Parish	495092.42	401406.08	6	7005	00198019	01/04/2009 00:00	1	3	BETWEEN 30-50 MPH	VERGE	0	POST TOP	NOT APPLICABLE	RIGID COLUMN	URBIS	AXIA 2 S1	MALLATITE	TUBULAR STEEL	6	GALVANISED	TUBULAR	
46101834	GLANFORD ROAD	Brigg Parish	500444.88	407221.7	1	7000	00198020	01/04/2015 00:00	2	3	LESS THAN 30MPH	BACK OF FOOTPATH	0	POST TOP	NOT APPLICABLE	RIGID COLUMN	PHILIPS	STELA LONG 10 LED	MALLATITE	TUBULAR STEEL	5	GALVANISED	TUBULAR	
46101834	GLANFORD ROAD	Brigg Parish	500771.34	407321.91	10	7009	00198029	01/04/2015 00:00	2	3	LESS THAN 30MPH	VERGE	0	POST TOP	NOT APPLICABLE	RIGID COLUMN	PHILIPS	STELA LONG 10 LED	MALLATITE	TUBULAR STEEL	5	GALVANISED	TUBULAR	
46101834	GLANFORD ROAD	Brigg Parish	500808.37	407332.21	11	7010	00198030	01/04/2015 00:00	2	3	LESS THAN 30MPH	BACK OF FOOTPATH	0	POST TOP	NOT APPLICABLE	RIGID COLUMN	PHILIPS	STELA LONG 10 LED	MALLATITE	TUBULAR STEEL	5	GALVANISED	TUBULAR	
46101834	GLANFORD ROAD	Brigg Parish	500481.42	407234.3	2	7001	00198021	01/04/2015 00:00	2	3	LESS THAN 30MPH	BACK OF FOOTPATH	0	POST TOP	NOT APPLICABLE	RIGID COLUMN	PHILIPS	STELA LONG 10 LED	MALLATITE	TUBULAR STEEL	5	GALVANISED	TUBULAR	
46101834	GLANFORD ROAD	Brigg Parish	500519.32	407245.87	3	7002	00198022	01/04/2015 00:00	2	3	LESS THAN 30MPH	BACK OF FOOTPATH	0	POST TOP	NOT APPLICABLE	RIGID COLUMN	PHILIPS	STELA LONG 10 LED	MALLATITE	TUBULAR STEEL	5	GALVANISED	TUBULAR	
46101834	GLANFORD ROAD	Brigg Parish	500554.33	407257.69	4	7003	00198023	01/04/2015 00:00	2	3	LESS THAN 30MPH	BACK OF FOOTPATH	0	POST TOP	NOT APPLICABLE	RIGID COLUMN	PHILIPS	STELA LONG 10 LED	MALLATITE	TUBULAR STEEL	5	GALVANISED	TUBULAR	
46101834	GLANFORD ROAD	Brigg Parish	500586.95	407267.75	5	7004	00198024	01/04/2015 00:00	2	3	LESS THAN 30MPH	BACK OF FOOTPATH	0	POST TOP	NOT APPLICABLE	RIGID COLUMN	PHILIPS	STELA LONG 10 LED	MALLATITE	TUBULAR STEEL	5	GALVANISED	TUBULAR	
46101834	GLANFORD ROAD	Brigg Parish	500625.94	407279.52	6	7005	00198025	01/04/2015 00:00	2	3	LESS THAN 30MPH	BACK OF FOOTPATH	0	POST TOP	NOT APPLICABLE	RIGID COLUMN	PHILIPS	STELA LONG 10 LED	MALLATITE	TUBULAR STEEL	5	GALVANISED	TUBULAR	
46101834	GLANFORD ROAD	Brigg Parish	500664.74	407291.36	7	7006	00198026	01/04/2015 00:00	2	3	LESS THAN 30MPH	BACK OF FOOTPATH	0	POST TOP	NOT APPLICABLE	RIGID COLUMN	PHILIPS	STELA LONG 10 LED	MALLATITE	TUBULAR STEEL	5	GALVANISED	TUBULAR	
46101834	GLANFORD ROAD	Brigg Parish	500695.5	407300.7	8	7007	00198027	01/04/2015 00:00	2	3	LESS THAN 30MPH	BACK OF FOOTPATH	0	POST TOP	NOT APPLICABLE	RIGID COLUMN	PHILIPS	STELA LONG 10 LED	MALLATITE	TUBULAR STEEL	5	GALVANISED	TUBULAR	
46101834	GLANFORD ROAD	Brigg Parish	500736.59	407312.41	9	7008	00198028	01/04/2015 00:00	2	3	LESS THAN 30MPH	BACK OF FOOTPATH	0	POST TOP	NOT APPLICABLE	RIGID COLUMN	PHILIPS	STELA LONG 10 LED	MALLATITE	TUBULAR STEEL	5	GALVANISED	TUBULAR	
46101835	GLEBE ROAD	Scunthorpe	489883.02	411788.26	1	7000	00198031	31/07/2020 00:00	4	4	LESS THAN 30MPH	BACK OF FOOTPATH	1000	SINGLE ARM	NOT APPLICABLE	RIGID COLUMN	URBIS	AXIA 2 S1	MALLATITE	TUBULAR STEEL	8	GALVANISED	TUBULAR	
46101835	GLEBE ROAD	Scunthorpe	489631.08	411771.07	10	7009	00198040	28/09/2023 00:00	4	4	LESS THAN 30MPH	FRONT OF FOOTPATH	500	SINGLE ARM	NOT APPLICABLE	RIGID COLUMN	URBIS	AXIA 2 S1	MALLATITE	STEEL	8	NOT APPLICABI	TUBULAR	
46101835	GLEBE ROAD	Scunthorpe	489614.36	411752.7	11	7010	00198041	12/11/2020 00:00	4	4	LESS THAN 30MPH	BACK OF FOOTPATH	1000	SINGLE ARM	NOT APPLICABLE	RIGID COLUMN	URBIS	AXIA 2 S1	MALLATITE	TUBULAR STEEL	8	GALVANISED	TUBULAR	
46101835	GLEBE ROAD	Scunthorpe	489584.74	411745.73	12	7011	00198042	12/11/2020 00:00	4	4	LESS THAN 30MPH	BACK OF FOOTPATH	1000	SINGLE ARM	NOT APPLICABLE	RIGID COLUMN	URBIS	AXIA 2 S1	MALLATITE	TUBULAR STEEL	8	GALVANISED	TUBULAR	
46101835	GLEBE ROAD	Scunthorpe	489580.21	411760.35	13	7012	00198043	01/04/1983 00:00	4	4	LESS THAN 30MPH	BACK OF FOOTPATH	1250	SINGLE ARM	NOT APPLICABLE	RIGID COLUMN	URBIS	AXIA 2 S1	PETITJEAN	SHEET STEEL	8	GALVANISED	THAMES	
46101835	GLEBE ROAD	Scunthorpe	489565.45	411738.76	14FP	7013	00198044	01/04/1983 00:00	4	4	LESS THAN 30MPH	BACK OF FOOTPATH	1000	SINGLE ARM	NOT APPLICABLE	RIGID COLUMN	URBIS	AXIA 2 S1	PETITJEAN	SHEET STEEL	10	GALVANISED	THAMES	
46101835	GLEBE ROAD	Scunthorpe	489554.66	411757.26	15FP	7014	00198045	01/04/1983 00:00	4	4	LESS THAN 30MPH	BACK OF FOOTPATH	1000	SINGLE ARM	NOT APPLICABLE	RIGID COLUMN	URBIS	AXIA 2 S1	PETITJEAN	SHEET STEEL	10	GALVANISED	THAMES	
46101835	GLEBE ROAD	Scunthorpe	489840.54	411782.9	2	7001	00198032	31/07/2020 00:00	4	4	LESS THAN 30MPH	BACK OF FOOTPATH	1000	SINGLE ARM	NOT APPLICABLE	RIGID COLUMN	URBIS	AXIA 2 S1	MALLATITE	TUBULAR STEEL	8	GALVANISED	TUBULAR	
46101835	GLEBE ROAD	Scunthorpe	489816.44	411797.61	3	7002	00198033	12/11/2020 00:00	4	4	LESS THAN 30MPH	BACK OF FOOTPATH	1000	SINGLE ARM	NOT APPLICABLE	RIGID COLUMN	URBIS	AXIA 2 S1	MALLATITE	TUBULAR STEEL	8	GALVANISED	TUBULAR	
46101835	GLEBE ROAD	Scunthorpe	489790.34	411785.16	4	7003	00198034	01/04/1983 00:00	4	4	LESS THAN 30MPH	BACK OF FOOTPATH	1250	SINGLE ARM	MID GREY	RIGID COLUMN	URBIS	AXIA 2 S1	PETITJEAN	SHEET STEEL	8	PAINTED	THAMES	
46101835	GLEBE ROAD	Scunthorpe	489770.12	411798.06	5	7004	00198035	12/11/2020 00:00	4	4	LESS THAN 30MPH	BACK OF FOOTPATH	1000	SINGLE ARM	NOT APPLICABLE	RIGID COLUMN	URBIS	AXIA 2 S1	MALLATITE	TUBULAR STEEL	8	GALVANISED	TUBULAR	
46101835	GLEBE ROAD	Scunthorpe	489740.69	411780.71	6	7005	00198036	01/04/1983 00:00	4	4	LESS THAN 30MPH	BACK OF FOOTPATH	1250	SINGLE ARM	NOT APPLICABLE	RIGID COLUMN	URBIS	AXIA 2 S1	PETITJEAN	SHEET STEEL	8	GALVANISED	THAMES	
46101835	GLEBE ROAD	Scunthorpe	489710.97	411787.84	7	7006	00198037	12/11/2020 00:00	4	4	LESS THAN 30MPH	BACK OF FOOTPATH	1000	SINGLE ARM	NOT APPLICABLE	RIGID COLUMN	URBIS	AXIA 2 S1	MALLATITE	TUBULAR STEEL	8	GALVANISED	TUBULAR	
46101835	GLEBE ROAD	Scunthorpe	489681.73	411781.18	8	7007	00198038	01/04/1983 00:00	4	4	LESS THAN 30MPH	FRONT OF FOOTPATH	1000	SINGLE ARM	MID GREY	RIGID COLUMN	URBIS	AXIA 2 S1	PETITJEAN	SHEET STEEL	8	PAINTED	THAMES	
46101835	GLEBE ROAD	Scunthorpe	489654.06	411760.4	9	7008	00198039	01/04/1983 00:00	4	4	LESS THAN 30MPH	BACK OF FOOTPATH	2000	SINGLE ARM	MID GREY	RIGID COLUMN	URBIS	AXIA 2 S1	PETITJEAN	SHEET STEEL	8	PAINTED	THAMES	
46101837	GODDARD CLOSE	Barton upon Humber Parish	502402.07	421224.37	1	7000	00198047	01/04/1995 00:00	5	2	LESS THAN 30MPH	VERGE	0	POST TOP	NOT APPLICABLE	RIGID COLUMN	URBIS	AXIA 2 S1	PETITJEAN	SHEET STEEL	5	GALVANISED	NIDD	
46101837	GODDARD CLOSE	Barton upon Humber Parish	502402.18	421249.01	2	7001	00198048	01/04/1995 00:00	5	2	LESS THAN 30MPH	VERGE	0	POST TOP	NOT APPLICABLE	RIGID COLUMN	URBIS	AXIA 2 S1	PETITJEAN	SHEET STEEL	5	GALVANISED	NIDD	
46101837	GODDARD CLOSE	Barton upon Humber Parish	502432.23	421240.21	3	7002	00198049	01/04/1995 00:00	5	2	LESS THAN 30MPH	VERGE	0	POST TOP	NOT APPLICABLE	RIGID COLUMN	URBIS	AXIA 2 S1	PETITJEAN	SHEET STEEL	5	GALVANISED	NIDD	
46101838	GRANGE AVENUE	Barton upon Humber Parish	502607.28	421653.33	1	7000	00198050	01/04/1993 00:00	5	2	LESS THAN 30MPH	VERGE	800	SINGLE ARM	MID GREY	RIGID COLUMN	URBIS	AXIA 2 S1	PETITJEAN	SHEET STEEL	6	PAINTED	DAER	
46101838	GRANGE AVENUE	Barton upon Humber Parish	502788.39	421607.83	10	7009	00198059	01/04/1993 00:00	5	2	LESS THAN 30MPH	BACK OF FOOTPATH	800	SINGLE ARM	MID GREY	RIGID COLUMN	URBIS	AXIA 2 S1	PETITJEAN	SHEET STEEL	6	PAINTED	DAER	
46101838	GRANGE AVENUE	Barton upon Humber Parish	502761.72	421612.87	11	7010	00198060	01/04/1993 00:00	5	2	LESS THAN 30MPH	BACK OF FOOTPATH	800	SINGLE ARM	MID GREY	RIGID COLUMN	URBIS	AXIA 2 S1	PETITJEAN	SHEET STEEL	6	PAINTED	DAER	
46101838	GRANGE AVENUE	Barton upon Humber Parish	502633.07	421649.34	2	7001	00198051	01/04/1993 00:00	5	2	LESS THAN 30MPH	VERGE	800	SINGLE ARM	MID GREY	RIGID COLUMN	URBIS	AXIA 2 S1	PETITJEAN	SHEET STEEL	6	PAINTED	DAER	
46101838	GRANGE AVENUE	Barton upon Humber Parish	502660.16	421645.75	3	7002	00198052	01/04/1993 00:00	5	2	LESS THAN 30MPH	VERGE	800	SINGLE ARM	MID GREY	RIGID COLUMN	URBIS	AXIA 2 S1	PETITJEAN	SHEET STEEL	6	PAINTED	DAER	
46101838	GRANGE AVENUE	Barton upon Humber Parish	502691.69	421642.01	4	7003	00198053	01/04/1993 00:00	5	2	LESS THAN 30MPH	BACK OF FOOTPATH	800	SINGLE ARM	MID GREY	RIGID COLUMN	URBIS	AXIA 2 S1	PETITJEAN	SHEET STEEL	6	PAINTED	DAER	
46101838	GRANGE AVENUE	Barton upon Humber Parish	502717.55	421629.45	5	7004	00198054	01/04/1993 00:00	5	2	LESS THAN 30MPH	BACK OF FOOTPATH	800	SINGLE ARM	MID GREY	RIGID COLUMN	URBIS	AXIA 2 S1	PETITJEAN	SHEET STEEL	6	PAINTED	DAER	
46101838	GRANGE AVENUE	Barton upon Humber Parish	502743.33	421633.88	6	7005	00198055	01/04/1993 00:00	5	2	LESS THAN 30MPH	BACK OF FOOTPATH	800	SINGLE ARM	MID GREY	RIGID COLUMN	URBIS	AXIA 2 S1	PETITJEAN	SHEET STEEL	6	PAINTED	DAER	
46101838	GRANGE AVENUE	Barton upon Humber Parish	502761.16	421638.34	7	7006	00198056	01/04/1993 00:00	5	2	LESS THAN 30MPH	BACK OF FOOTPATH	800	SINGLE ARM	MID GREY	RIGID COLUMN	URBIS	AXIA 2 S1	PETITJEAN	SHEET STEEL	6	PAINTED	DAER	
46101838	GRANGE AVENUE	Barton upon Humber Parish	502791.57	421638.36	8	7007	00198057	01/04/1993 00:00	5	2	LESS THAN 30MPH	BACK OF FOOTPATH	800	SINGLE ARM	MID GREY	RIGID COLUMN	URBIS	AXIA 2 S1	PETITJEAN	SHEET STEEL	6	PAINTED	DAER	
46101838	GRANGE AVENUE	Barton upon Humber Parish	502814.96	421621.64	9	7008	00198058	01/04/1993 00:00	5	2	LESS THAN 30MPH	BACK OF FOOTPATH	800	SINGLE ARM	MID GREY	RIGID COLUMN	URBIS	AXIA 2 S1	PETITJEAN	SHEET STEEL	6	PAINTED	DAER	
46101839	GRANGE LANE	Scunthorpe	490772.3	408863	1	7000	00198061	01/04/1999 00:00	3	2	BETWEEN 30-50 MPH	VERGE	1250	SINGLE ARM	MID GREY	RIGID COLUMN	URBIS	AXIA 2 S1	PETITJEAN	SHEET STEEL	12	PAINTED	THAMES	
46101839	GRANGE LANE	Scunthorpe	490874.11	409075.38	10	7009	00198070	16/04/2021 00:00	3	2	BETWEEN 30-50 MPH	BACK OF FOOTPATH	1000	SINGLE ARM	NOT APPLICABLE	RIGID COLUMN	URBIS	AXIA 2 S1	MALLATITE	TUBULAR STEEL	8	GALVANISED	TUBULAR	
46101839	GRANGE LANE	Scunthorpe	490895.4	409103.39	11	7010	00198071	01/04/2010 00:00	3	2	BETWEEN 30-50 MPH	BACK OF FOOTPATH	1000	SINGLE ARM	NOT APPLICABLE	RIGID COLUMN	URBIS	AXIA 2 S1	VALMONT ST	SHEET STEEL	8	GALVANISED	THAMES	
46101839	GRANGE LANE	Scunthorpe	490889.81	409134.42	12	7011	00198072	14/08/2020 00:00	3	2	BETWEEN 30-50 MPH	VERGE	1000	SINGLE ARM	NOT APPLICABLE	RIGID COLUMN	URBIS	AXIA 2 S1	MALLATITE	TUBULAR STEEL	8	GALVANISED	TUBULAR	
46101839	GRANGE LANE	Scunthorpe	490909.42	409162.58	13FP	7012	00198073	01/04/2012 00:00	3	2	BETWEEN 30-50 MPH	BACK OF FOOTPATH	1000	SINGLE ARM	NOT APPLICABLE	RIGID COLUMN	URBIS	AXIA 2 S1	VALMONT ST	SHEET STEEL	8	GALVANISED	THAMES	
46101839	GRANGE LANE	Scunthorpe	490901.06	409186.74	14	7013	00198074	16/04/2021 00:00	3	2	BETWEEN 30-50 MPH	VERGE	1000	SINGLE ARM	NOT APPLICABLE	RIGID COLUMN	URBIS	AXIA 2 S1	MALLATITE	TUBULAR STEEL	8	GALVANISED	TUBULAR	
46101839	GRANGE LANE	Scunthorpe	490919.67	409202.83	15	7014	00198075	01/04/1984 00:00	3	2	BETWEEN 30-50 MPH	BACK OF FOOTPATH	500	SINGLE ARM	NOT APPLICABLE	RIGID COLUMN	URBIS	AXIA 2 S1	PETITJEAN	SHEET STEEL	8	GALVANISED	THAMES	
46101839	GRANGE LANE	Scunthorpe	490913.14	409226.97	16	7015	00198076	16/04/2021 00:00	3	2	BETWEEN 30-50 MPH	BACK OF FOOTPATH	1000	SINGLE ARM	NOT APPLICABLE	RIGID COLUMN	URBIS	AXIA 2 S1	MALLATITE	TUBULAR STEEL	8	GALVANISED	TUBULAR	
46101839	GRANGE LANE	Scunthorpe	490930.13	409253.82	17	7016	00198077	16/04/2021 00:00	3	2	BETWEEN 30-50 MPH	BACK OF FOOTPATH	1000	SINGLE ARM	NOT APPLICABLE	RIGID COLUMN	URBIS	AXIA 2 S1	MALLATITE	TUBULAR STEEL	8	GALVANISED	TUBULAR	
46101839	GRANGE LANE	Scunthorpe	490924.45	409277.45	18	7017	00198078	16/04/2021 00:00	3	2	BETWEEN 30-50 MPH	BACK OF FOOTPATH	1000	SINGLE ARM	NOT APPLICABLE	RIGID COLUMN	URBIS	AXIA 2 S1	MALLATITE	TUBULAR STEEL	8	GALVANISED	TUBULAR	
46101839	GRANGE LANE	Scunthorpe	490942.05	409304.61	19	7018	00198079	16/04/2021 00:00	3	2	BETWEEN 30-50 MPH	BACK OF FOOTPATH	1000	SINGLE ARM	NOT APPLICABLE	RIGID COLUMN	URBIS	AXIA 2 S1	MALLATITE	TUBULAR STEEL	8	GALVANISED	TUBULAR	
46101839	GRANGE LANE	Scunthorpe	490790.4	408849.76	2	7001	00198062	01/04/1999 00:00	3	2	BETWEEN 30-50 MPH	BACK OF FOOTPATH	1250	SINGLE ARM	MID GREY	RIGID COLUMN	URBIS	AXIA 2 S1	PETITJEAN	SHEET STEEL	12	PAINTED	THAMES	
46101839	GRANGE LANE	Scunthorpe	490932.62	409322.48	20	7019	00198080	01/04/2020 00:00	3	2	BETWEEN 30-50 MPH	BACK OF FOOTPATH	1000	SINGLE ARM	NOT APPLICABLE	RIGID COLUMN	URBIS	AXIA 2 S1	MALLATITE	TUBULAR STEEL	8	GALVANISED	TUBULAR	
46101839	GRANGE LANE	Scunthorpe	490953.09	409353.77	21	7020	00198081	16/04/2021 00:00	3	2	BETWEEN 30-50 MPH	BACK OF FOOTPATH	1000	SINGLE ARM	NOT APPLICABLE	RIGID COLUMN	URBIS	AXIA 2 S1	MALLATITE	TUBULAR STEEL	8	GALVANISED	TUBULAR	
46101839	GRANGE LANE	Scunthorpe	490947.86	409382.48	22	7021	00198082	16/04/2021 00:00	3	2	BETWEEN 30-50 MPH	BACK OF FOOTPATH	1000	SINGLE ARM	NOT APPLICABLE	RIGID COLUMN	URBIS	AXIA 2 S1	MALLATITE	TUBULAR STEEL	8	GALVANISED	TUBULAR	
46101839	GRANGE LANE	Scunthorpe	490965.97	409408.13	23	7022	00198083	01/04/2012 00:00	3	2	BETWEEN 30-50 MPH	BACK OF FOOTPATH	1000	SINGLE ARM	NOT APPLICABLE	RIGID COLUMN	URBIS	AXIA 2 S1	VALMONT ST	SHEET STEEL	8	GALVANISED	THAMES	
46101839	GRANGE LANE	Scunthorpe	490960.11	409446.01	24	7023	00198084	01/04/1984 00:00	3	2	BETWEEN 30-50 MPH	BACK OF FOOTPATH	800	SINGLE ARM	NOT APPLICABLE	RIGID COLUMN	URBIS	AXIA 2 S1	PETITJEAN	SHEET STEEL	8	GALVANISED	THAMES	
46101839	GRANGE LANE	Scunthorpe	490982.79	409474.42	25	7024	00198085	01/04/1984 00:00	3	2	BETWEEN 30-50 MPH	BACK OF FOOTPATH	1250	SINGLE ARM	NOT APPLICABLE	RIGID COLUMN	URBIS	AXIA 2 S1	PETITJEAN	SHEET STEEL	8	GALVANISED	THAMES	
46101839	GRANGE LANE	Scunthorpe	490989.26	409502.83	26	7025	00198086	01/04/1984 00:00	3	2	BETWEEN 30-50 MPH	BACK OF FOOTPATH	1250	SINGLE ARM	NOT APPLICABLE	RIGID COLUMN	URBIS	AXIA 2 S1	PETITJEAN	SHEET STEEL	8	GALVANISED	THAMES	
46101839	GRANGE LANE	Scunthorpe	490981.71	409533.01	27	7026	00198087	16/04/2021 00:00	3	2	BETWEEN 30-50 MPH	VERGE	1000	SINGLE ARM	NOT APPLICABLE	RIGID COLUMN	URBIS	AXIA 2 S1	MALLATITE	TUBULAR STEEL	8	GALVANISED	TUBULAR	
46101839	GRANGE LANE	Scunthorpe	491001.74	409556.58	28	7027	00198088	01/04/1984 00:00	3	2	BETWEEN 30-50 MPH	BACK OF FOOTPATH	1250	SINGLE ARM	NOT APPLICABLE	RIGID COLUMN	URBIS	AXIA 2 S1	PETITJEAN	SHEET STEEL	8	GALVANISED	THAMES	
46101839	GRANGE LANE	Scunthorpe	490995.2	409589.77	29	7028	00198089	16/04/2021 00:00	3	2	BETWEEN 30-50 MPH	VERGE	1000	SINGLE ARM	NOT APPLICABLE	RIGID COLUMN	URBIS	AXIA 2 S1	MALLATITE	TUBULAR STEEL	8	GALVANISED	TUBULAR	
46101839	GRANGE LANE	Scunthorpe	490809.01	408873.39	3	7002	00198063	01/04/1999 00:00	3	2	BETWEEN 30-50 MPH	BACK OF FOOTPATH	1250	SINGLE ARM	MID GREY	RIGID COLUMN	URBIS	AXIA 2 S1	PETITJEAN	SHEET STEEL	12	PAINTED	THAMES	
46101839	GRANGE LANE	Scunthorpe	491013.45	409617.24	30	7029	00198090	16/04/2021 00:00	3	2	BETWEEN 30-50 MPH	BACK OF FOOTPATH	1000	SINGLE ARM	NOT APPLICABLE	RIGID COLUMN	URBIS	AXIA 2 S1	MALLATITE	TUBULAR STEEL	8	GALVANISED	TUBULAR	
46101839	GRANGE LANE	Scunthorpe	491020.38	409647.41	31	7030	00198091	16/04/2021 00:00	3	2	BETWEEN 30-50 MPH	BACK OF FOOTPATH	1000	SINGLE ARM	NOT APPLICABLE	RIGID COLUMN	URBIS	AXIA 2 S1	MALLATITE	TUBULAR STEEL	8	GALVANISED	TUBULAR	
46101839	GRANGE LANE	Scunthorpe	491028.93	409679.09	32	7031	00198092	01/04/1984 00:00	3	2	BETWEEN 30-50 MPH	BACK OF FOOTPATH	1250	SINGLE ARM	NOT APPLICABLE	RIGID COLUMN	URBIS	AXIA 2 S1	PETITJEAN	SHEET STEEL	8	GALVANISED	THAMES	
46101839	GRANGE LANE	Scunthorpe	491021.38	409702.73	33	7032	00198093	16/04/2021 00:00	3	2	BETWEEN 30-50 MPH	VERGE	1000	SINGLE ARM	NOT APPLICABLE	RIGID COLUMN	URBIS	AXIA 2 S1	MALLATITE	TUBULAR STEEL	8	GALVANISED	TUBULAR	
46101839	GRANGE LANE	Scunthorpe	491040.5	409736.43	34	7033	00198094	16/04/2021 00:00	3	2	BETWEEN 30-50 MPH	BACK OF FOOTPATH	1000	SINGLE ARM	NOT APPLICABLE	RIGID COLUMN	URBIS	AXIA 2 S1	MALLATITE	TUBULAR STEEL	8	GALVANISED	TUBULAR	
46101839	GRANGE LANE	Scunthorpe	491048.13	409760.49	35	7034	00198095	01/04/1984 00:00	3	2	BETWEEN 30-50 MPH	BACK OF FOOTPATH	1250	SINGLE ARM	NOT APPLICABLE	RIGID COLUMN	URBIS	AXIA 2 S1	PETITJEAN	SHEET STEEL	8	GALVANISED	THAMES	
46101839	GRANGE LANE	Scunthorpe	491041.09	409791.17	36FP	7035	00198096	04/06/2021 00:00	3	2	BETWEEN 30-50 MPH	VERGE	500	SINGLE ARM	NOT APPLICABLE	RIGID COLUMN	URBIS	AXIA 2 S1	MALLATITE	TUBULAR STEEL	8	GALVANISED	TUBULAR	
46101839	GRANGE LANE	Scunthorpe	491046.12	409819.33	37	7036	00198097	01/04/1984 00:00	3	2	BETWEEN 30-50 MPH	BACK OF FOOTPATH	1250	SINGLE ARM	NOT APPLICABLE	RIGID COLUMN	URBIS	AXIA 2 S1	PETITJEAN	SHEET STEEL	8	GALVANISED	THAMES	
46101839	GRANGE LANE	Scunthorpe	491067.19	409842.33	38FP	7037	00198098	01/04/1984 00:00	3	2	BETWEEN 30-50 MPH	BACK OF FOOTPATH	1250	SINGLE ARM	NOT APPLICABLE	RIGID COLUMN	URBIS	AXIA 2 S1	PETITJEAN	SHEET STEEL	8	GALVANISED	THAMES	
46101839	GRANGE LANE	Scunthorpe	491056.12	409862.95	39	7038	00198099	05/07/2019 00:00	3	2	BETWEEN 30-50 MPH	BACK OF FOOTPATH	1000	SINGLE ARM	NOT APPLICABLE	RIGID COLUMN	URBIS	AXIA 2 S1	MALLATITE	TUBULAR STEEL	8	GALVANISED	TUBULAR	
46101839	GRANGE LANE	Scunthorpe	491063.64	409886.73	40	7039	00198100	01/04/1984 00:00	3	2	BETWEEN 30-

46101854	HAWTHORN AVENUE	Brigg Parish	500376.94	407747.79	1	7000	00198249	01/04/1993 00:00	2	3	LESS THAN 30MPH	FRONT OF FOOTPATH	800	SINGLE ARM	NOT APPLICABLE	RIGID COLUMN	URBIS	AXIA 2 S1	PETITJEAN	SHEET STEEL	6	GALVANISED	DAER
46101854	HAWTHORN AVENUE	Brigg Parish	500247.45	407861.36	10	7009	00198258	01/04/1993 00:00	2	3	LESS THAN 30MPH	FRONT OF FOOTPATH	800	SINGLE ARM	NOT APPLICABLE	RIGID COLUMN	URBIS	AXIA 2 S1	PETITJEAN	SHEET STEEL	6	GALVANISED	DAER
46101854	HAWTHORN AVENUE	Brigg Parish	500267.2	407847.72	11	7010	00198259	01/04/1993 00:00	2	3	LESS THAN 30MPH	FRONT OF FOOTPATH	800	SINGLE ARM	NOT APPLICABLE	RIGID COLUMN	URBIS	AXIA 2 S1	PETITJEAN	SHEET STEEL	6	GALVANISED	DAER
46101854	HAWTHORN AVENUE	Brigg Parish	500266.98	407825.47	12	7011	00198260	01/04/1993 00:00	2	3	LESS THAN 30MPH	FRONT OF FOOTPATH	800	SINGLE ARM	NOT APPLICABLE	RIGID COLUMN	URBIS	AXIA 2 S1	PETITJEAN	SHEET STEEL	6	GALVANISED	DAER
46101854	HAWTHORN AVENUE	Brigg Parish	500273.71	407802.12	13	7012	00198261	01/04/1993 00:00	2	3	LESS THAN 30MPH	FRONT OF FOOTPATH	800	SINGLE ARM	NOT APPLICABLE	RIGID COLUMN	URBIS	AXIA 2 S1	PETITJEAN	SHEET STEEL	6	GALVANISED	DAER
46101854	HAWTHORN AVENUE	Brigg Parish	500287.15	407779.39	14	7013	00198262	01/04/1993 00:00	2	3	LESS THAN 30MPH	FRONT OF FOOTPATH	800	SINGLE ARM	NOT APPLICABLE	RIGID COLUMN	URBIS	AXIA 2 S1	PETITJEAN	SHEET STEEL	6	GALVANISED	DAER
46101854	HAWTHORN AVENUE	Brigg Parish	500291.08	407757.63	15	7014	00198263	01/04/1993 00:00	2	3	LESS THAN 30MPH	FRONT OF FOOTPATH	800	SINGLE ARM	NOT APPLICABLE	RIGID COLUMN	URBIS	AXIA 2 S1	PETITJEAN	SHEET STEEL	6	GALVANISED	DAER
46101854	HAWTHORN AVENUE	Brigg Parish	500318.27	407767.78	16	7015	00198264	01/04/1993 00:00	2	3	LESS THAN 30MPH	FRONT OF FOOTPATH	800	SINGLE ARM	NOT APPLICABLE	RIGID COLUMN	URBIS	AXIA 2 S1	PETITJEAN	SHEET STEEL	6	GALVANISED	DAER
46101854	HAWTHORN AVENUE	Brigg Parish	500348.36	407768.25	17	7016	00198265	01/04/1993 00:00	2	3	LESS THAN 30MPH	FRONT OF FOOTPATH	800	SINGLE ARM	NOT APPLICABLE	RIGID COLUMN	URBIS	AXIA 2 S1	PETITJEAN	SHEET STEEL	6	GALVANISED	DAER
46101854	HAWTHORN AVENUE	Brigg Parish	500362.69	407768.41	2	7001	00198250	01/04/1993 00:00	2	3	LESS THAN 30MPH	FRONT OF FOOTPATH	800	SINGLE ARM	NOT APPLICABLE	RIGID COLUMN	URBIS	AXIA 2 S1	PETITJEAN	SHEET STEEL	6	GALVANISED	DAER
46101854	HAWTHORN AVENUE	Brigg Parish	500363.27	407793.48	3	7002	00198251	01/04/1993 00:00	2	3	LESS THAN 30MPH	FRONT OF FOOTPATH	800	SINGLE ARM	NOT APPLICABLE	RIGID COLUMN	URBIS	AXIA 2 S1	PETITJEAN	SHEET STEEL	6	GALVANISED	DAER
46101854	HAWTHORN AVENUE	Brigg Parish	500346.75	407816.96	4	7003	00198252	01/04/1993 00:00	2	3	LESS THAN 30MPH	FRONT OF FOOTPATH	800	SINGLE ARM	NOT APPLICABLE	RIGID COLUMN	URBIS	AXIA 2 S1	PETITJEAN	SHEET STEEL	6	GALVANISED	DAER
46101854	HAWTHORN AVENUE	Brigg Parish	500346.94	407844.01	5	7004	00198253	01/04/1993 00:00	2	3	LESS THAN 30MPH	FRONT OF FOOTPATH	800	SINGLE ARM	NOT APPLICABLE	RIGID COLUMN	URBIS	AXIA 2 S1	PETITJEAN	SHEET STEEL	6	GALVANISED	DAER
46101854	HAWTHORN AVENUE	Brigg Parish	500338.99	407869.98	6	7005	00198254	01/04/1993 00:00	2	3	LESS THAN 30MPH	FRONT OF FOOTPATH	800	SINGLE ARM	NOT APPLICABLE	RIGID COLUMN	URBIS	AXIA 2 S1	PETITJEAN	SHEET STEEL	6	GALVANISED	DAER
46101854	HAWTHORN AVENUE	Brigg Parish	500318.53	407879.15	7	7006	00198255	01/04/1993 00:00	2	3	LESS THAN 30MPH	FRONT OF FOOTPATH	800	SINGLE ARM	NOT APPLICABLE	RIGID COLUMN	URBIS	AXIA 2 S1	PETITJEAN	SHEET STEEL	6	GALVANISED	DAER
46101854	HAWTHORN AVENUE	Brigg Parish	500299.08	407865.05	8	7007	00198256	01/04/1993 00:00	2	3	LESS THAN 30MPH	FRONT OF FOOTPATH	800	SINGLE ARM	NOT APPLICABLE	RIGID COLUMN	URBIS	AXIA 2 S1	PETITJEAN	SHEET STEEL	6	GALVANISED	DAER
46101854	HAWTHORN AVENUE	Brigg Parish	500271.19	407867.24	9	7008	00198257	01/04/1993 00:00	2	3	LESS THAN 30MPH	FRONT OF FOOTPATH	800	SINGLE ARM	NOT APPLICABLE	RIGID COLUMN	URBIS	AXIA 2 S1	PETITJEAN	SHEET STEEL	6	GALVANISED	DAER
46101856	HEALEY ROAD	Scunthorpe	490351.11	409765.76	1	7000	00198266	11/06/2019 00:00	3	2	LESS THAN 30MPH	FRONT OF FOOTPATH	0	POST TOP	NOT APPLICABLE	RIGID COLUMN	URBIS	AXIA 2 S1	MALLATITE	TUBULAR STEEL	6	GALVANISED	TUBULAR
46101856	HEALEY ROAD	Scunthorpe	490442.27	409522.74	10	7009	00198275	11/06/2019 00:00	3	2	LESS THAN 30MPH	FRONT OF FOOTPATH	0	POST TOP	NOT APPLICABLE	RIGID COLUMN	URBIS	AXIA 2 S1	MALLATITE	TUBULAR STEEL	6	GALVANISED	TUBULAR
46101856	HEALEY ROAD	Scunthorpe	490429.64	409488.43	11	7010	00198276	01/04/2010 00:00	3	2	NOT ON A ROAD	BACK OF FOOTPATH	0	POST TOP	NOT APPLICABLE	MID HINGED	URBIS	AXIA 2 S1	VALMONT ST	SHEET STEEL	5	GALVANISED	LEVEN
46101856	HEALEY ROAD	Scunthorpe	490476.71	409498.13	12	7011	00198277	11/06/2019 00:00	3	2	LESS THAN 30MPH	FRONT OF FOOTPATH	0	POST TOP	NOT APPLICABLE	RIGID COLUMN	URBIS	AXIA 2 S1	MALLATITE	TUBULAR STEEL	6	GALVANISED	TUBULAR
46101856	HEALEY ROAD	Scunthorpe	490500.01	409461.96	13	7012	00198278	11/06/2019 00:00	3	2	LESS THAN 30MPH	FRONT OF FOOTPATH	0	POST TOP	NOT APPLICABLE	RIGID COLUMN	URBIS	AXIA 2 S1	MALLATITE	TUBULAR STEEL	6	GALVANISED	TUBULAR
46101856	HEALEY ROAD	Scunthorpe	490528.88	409442.82	14	7013	00198279	01/04/2005 00:00	3	2	LESS THAN 30MPH	BACK OF FOOTPATH	300	SINGLE ARM	NOT APPLICABLE	RIGID COLUMN	URBIS	AXIA 2 S1	NUMANA	TUBULAR STEEL	6	GALVANISED	STEPPED TUBULAR
46101856	HEALEY ROAD	Scunthorpe	490546.08	409413.58	15	7014	00198280	01/04/2005 00:00	3	2	LESS THAN 30MPH	BACK OF FOOTPATH	300	SINGLE ARM	NOT APPLICABLE	RIGID COLUMN	URBIS	AXIA 2 S1	MALLATITE	TUBULAR STEEL	6	GALVANISED	STEPPED TUBULAR
46101856	HEALEY ROAD	Scunthorpe	490560.05	409380.77	16	7015	00198281	01/04/1990 00:00	3	2	LESS THAN 30MPH	BACK OF FOOTPATH	800	SINGLE ARM	NOT APPLICABLE	RIGID COLUMN	URBIS	AXIA 2 S1	PETITJEAN	SHEET STEEL	6	GALVANISED	DAER
46101856	HEALEY ROAD	Scunthorpe	490557.63	409338.8	17	7016	00198282	01/04/1990 00:00	3	2	LESS THAN 30MPH	BACK OF FOOTPATH	800	SINGLE ARM	NOT APPLICABLE	RIGID COLUMN	URBIS	AXIA 2 S1	PETITJEAN	SHEET STEEL	6	GALVANISED	DAER
46101856	HEALEY ROAD	Scunthorpe	490573.06	409309.31	18	7017	00198283	11/06/2019 00:00	3	2	LESS THAN 30MPH	FRONT OF FOOTPATH	0	POST TOP	NOT APPLICABLE	RIGID COLUMN	URBIS	AXIA 2 S1	MALLATITE	TUBULAR STEEL	6	GALVANISED	TUBULAR
46101856	HEALEY ROAD	Scunthorpe	490575.2	409277.93	19FP	7018	00198284	11/06/2019 00:00	3	2	LESS THAN 30MPH	BACK OF FOOTPATH	0	POST TOP	NOT APPLICABLE	RIGID COLUMN	URBIS	AXIA 2 S1	MALLATITE	TUBULAR STEEL	6	GALVANISED	TUBULAR
46101856	HEALEY ROAD	Scunthorpe	490352.54	409740.45	2	7001	00198267	01/04/2010 00:00	3	2	LESS THAN 30MPH	FRONT OF FOOTPATH	0	POST TOP	NOT APPLICABLE	RIGID COLUMN	URBIS	AXIA 2 S1	VALMONT ST	TUBULAR STEEL	6	GALVANISED	TUBULAR
46101856	HEALEY ROAD	Scunthorpe	490555.55	409253.1	20	7019	00198285	11/06/2019 00:00	3	2	LESS THAN 30MPH	FRONT OF FOOTPATH	0	POST TOP	NOT APPLICABLE	RIGID COLUMN	URBIS	AXIA 2 S1	MALLATITE	TUBULAR STEEL	6	GALVANISED	TUBULAR
46101856	HEALEY ROAD	Scunthorpe	490557.78	409225.05	21	7020	00198286	11/06/2019 00:00	3	2	LESS THAN 30MPH	FRONT OF FOOTPATH	0	POST TOP	NOT APPLICABLE	RIGID COLUMN	URBIS	AXIA 2 S1	MALLATITE	TUBULAR STEEL	6	GALVANISED	TUBULAR
46101856	HEALEY ROAD	Scunthorpe	490344.66	409709.31	3	7002	00198268	01/04/2005 00:00	3	2	LESS THAN 30MPH	BACK OF FOOTPATH	300	SINGLE ARM	NOT APPLICABLE	RIGID COLUMN	URBIS	AXIA 2 S1	MALLATITE	TUBULAR STEEL	5	GALVANISED	STEPPED TUBULAR
46101856	HEALEY ROAD	Scunthorpe	490357.94	409684.84	4	7003	00198269	11/06/2019 00:00	3	2	LESS THAN 30MPH	FRONT OF FOOTPATH	0	POST TOP	NOT APPLICABLE	RIGID COLUMN	URBIS	AXIA 2 S1	MALLATITE	TUBULAR STEEL	6	GALVANISED	TUBULAR
46101856	HEALEY ROAD	Scunthorpe	490354.73	409658.81	5	7004	00198270	11/06/2019 00:00	3	2	LESS THAN 30MPH	FRONT OF FOOTPATH	0	POST TOP	NOT APPLICABLE	RIGID COLUMN	URBIS	AXIA 2 S1	MALLATITE	TUBULAR STEEL	6	GALVANISED	TUBULAR
46101856	HEALEY ROAD	Scunthorpe	490365.78	409626.05	6	7005	00198271	11/06/2019 00:00	3	2	LESS THAN 30MPH	FRONT OF FOOTPATH	0	POST TOP	NOT APPLICABLE	RIGID COLUMN	URBIS	AXIA 2 S1	MALLATITE	TUBULAR STEEL	6	GALVANISED	TUBULAR
46101856	HEALEY ROAD	Scunthorpe	490375.76	409604.66	7	7006	00198272	01/04/1980 00:00	3	2	LESS THAN 30MPH	FRONT OF FOOTPATH	300	SINGLE ARM	NOT APPLICABLE	RIGID COLUMN	URBIS	AXIA 2 S1	PETITJEAN	SHEET STEEL	5	GALVANISED	DAER
46101856	HEALEY ROAD	Scunthorpe	490400.39	409582.97	8	7007	00198273	11/06/2019 00:00	3	2	LESS THAN 30MPH	FRONT OF FOOTPATH	0	POST TOP	NOT APPLICABLE	RIGID COLUMN	URBIS	AXIA 2 S1	MALLATITE	TUBULAR STEEL	6	GALVANISED	TUBULAR
46101856	HEALEY ROAD	Scunthorpe	490416.59	409549.48	9	7008	00198274	11/06/2019 00:00	3	2	LESS THAN 30MPH	FRONT OF FOOTPATH	0	POST TOP	NOT APPLICABLE	RIGID COLUMN	URBIS	AXIA 2 S1	MALLATITE	TUBULAR STEEL	6	GALVANISED	TUBULAR
46101857	HEMPDYKE ROAD	Scunthorpe	488202.3	411908.24	1	7000	00198287	01/04/1995 00:00	6	3	LESS THAN 30MPH	BACK OF FOOTPATH	0	POST TOP	NOT APPLICABLE	RIGID COLUMN	URBIS	AXIA 2 S1	PETITJEAN	SHEET STEEL	6	GALVANISED	NIDD
46101857	HEMPDYKE ROAD	Scunthorpe	488029.81	411720.49	10	7009	00198296	01/04/1995 00:00	6	3	LESS THAN 30MPH	BACK OF FOOTPATH	0	POST TOP	NOT APPLICABLE	RIGID COLUMN	URBIS	AXIA 2 S1	PETITJEAN	SHEET STEEL	6	GALVANISED	NIDD
46101857	HEMPDYKE ROAD	Scunthorpe	488018.24	411702.76	11	7010	00198297	01/04/1995 00:00	6	3	LESS THAN 30MPH	BACK OF FOOTPATH	0	POST TOP	NOT APPLICABLE	RIGID COLUMN	URBIS	AXIA 2 S1	PETITJEAN	SHEET STEEL	6	GALVANISED	NIDD
46101857	HEMPDYKE ROAD	Scunthorpe	488029.76	411677.3	12	7011	00198298	01/04/1995 00:00	6	3	LESS THAN 30MPH	BACK OF FOOTPATH	0	POST TOP	NOT APPLICABLE	RIGID COLUMN	URBIS	AXIA 2 S1	PETITJEAN	SHEET STEEL	6	GALVANISED	NIDD
46101857	HEMPDYKE ROAD	Scunthorpe	488023.4	411665.78	13	7012	00198299	01/04/1995 00:00	6	3	LESS THAN 30MPH	BACK OF FOOTPATH	0	POST TOP	NOT APPLICABLE	RIGID COLUMN	URBIS	AXIA 2 S1	PETITJEAN	SHEET STEEL	6	GALVANISED	NIDD
46101857	HEMPDYKE ROAD	Scunthorpe	488015.96	411647.79	14	7013	00198300	01/04/1995 00:00	6	3	LESS THAN 30MPH	BACK OF FOOTPATH	0	POST TOP	NOT APPLICABLE	RIGID COLUMN	URBIS	AXIA 2 S1	PETITJEAN	SHEET STEEL	6	GALVANISED	NIDD
46101857	HEMPDYKE ROAD	Scunthorpe	488025.25	411610.72	15	7014	00198301	01/04/1995 00:00	6	3	LESS THAN 30MPH	BACK OF FOOTPATH	0	POST TOP	NOT APPLICABLE	RIGID COLUMN	URBIS	AXIA 2 S1	PETITJEAN	SHEET STEEL	6	GALVANISED	NIDD
46101857	HEMPDYKE ROAD	Scunthorpe	488013.2	411575	16	7015	00198302	01/04/1995 00:00	6	3	LESS THAN 30MPH	BACK OF FOOTPATH	0	POST TOP	NOT APPLICABLE	RIGID COLUMN	URBIS	AXIA 2 S1	PETITJEAN	SHEET STEEL	6	GALVANISED	NIDD
46101857	HEMPDYKE ROAD	Scunthorpe	488032.24	411548.51	17	7016	00198303	01/04/1995 00:00	6	3	LESS THAN 30MPH	BACK OF FOOTPATH	0	POST TOP	NOT APPLICABLE	RIGID COLUMN	URBIS	AXIA 2 S1	PETITJEAN	SHEET STEEL	6	GALVANISED	NIDD
46101857	HEMPDYKE ROAD	Scunthorpe	488170.9	411909.98	2	7001	00198288	01/04/1995 00:00	6	3	LESS THAN 30MPH	BACK OF FOOTPATH	0	POST TOP	NOT APPLICABLE	RIGID COLUMN	URBIS	AXIA 2 S1	PETITJEAN	SHEET STEEL	6	GALVANISED	NIDD
46101857	HEMPDYKE ROAD	Scunthorpe	488140.29	411899.97	3	7002	00198289	01/04/1995 00:00	6	3	LESS THAN 30MPH	BACK OF FOOTPATH	0	POST TOP	NOT APPLICABLE	RIGID COLUMN	URBIS	AXIA 2 S1	PETITJEAN	SHEET STEEL	6	GALVANISED	NIDD
46101857	HEMPDYKE ROAD	Scunthorpe	488114.34	411878.14	4	7003	00198290	01/04/1995 00:00	6	3	LESS THAN 30MPH	BACK OF FOOTPATH	0	POST TOP	NOT APPLICABLE	MID HINGED	URBIS	AXIA 2 S1	PETITJEAN	SHEET STEEL	6	GALVANISED	LEVEN
46101857	HEMPDYKE ROAD	Scunthorpe	488097.76	411854.76	5	7004	00198291	01/04/1995 00:00	6	3	LESS THAN 30MPH	BACK OF FOOTPATH	0	POST TOP	NOT APPLICABLE	RIGID COLUMN	URBIS	AXIA 2 S1	PETITJEAN	SHEET STEEL	6	GALVANISED	NIDD
46101857	HEMPDYKE ROAD	Scunthorpe	488089.98	411827.09	6	7005	00198292	01/04/1995 00:00	6	3	LESS THAN 30MPH	BACK OF FOOTPATH	0	POST TOP	NOT APPLICABLE	RIGID COLUMN	URBIS	AXIA 2 S1	PETITJEAN	SHEET STEEL	6	GALVANISED	NIDD
46101857	HEMPDYKE ROAD	Scunthorpe	488063.72	411810.58	7	7006	00198293	01/04/1995 00:00	6	3	LESS THAN 30MPH	BACK OF FOOTPATH	0	POST TOP	NOT APPLICABLE	RIGID COLUMN	URBIS	AXIA 2 S1	PETITJEAN	SHEET STEEL	6	GALVANISED	NIDD
46101857	HEMPDYKE ROAD	Scunthorpe	488051.68	411776.1	8	7007	00198294	01/04/1995 00:00	6	3	LESS THAN 30MPH	BACK OF FOOTPATH	0	POST TOP	NOT APPLICABLE	RIGID COLUMN	URBIS	AXIA 2 S1	PETITJEAN	SHEET STEEL	6	GALVANISED	NIDD
46101857	HEMPDYKE ROAD	Scunthorpe	488023.72	411753	9	7008	00198295	01/04/1995 00:00	6	3	LESS THAN 30MPH	BACK OF FOOTPATH	0	POST TOP	NOT APPLICABLE	RIGID COLUMN	URBIS	AXIA 2 S1	PETITJEAN	SHEET STEEL	6	GALVANISED	NIDD
46101858	HENDERSON AVENUE	Scunthorpe	488649.94	411713.24	1	7024	00198328	01/04/1991 00:00	6	3	LESS THAN 30MPH	VERGE	1500	SINGLE ARM	NOT APPLICABLE	RIGID COLUMN	URBIS	AXIA 2 S1	PETITJEAN	SHEET STEEL	8	GALVANISED	THAMES
46101858	HENDERSON AVENUE	Scunthorpe	488719.38	411297.52	1	7000	00198304	01/04/1991 00:00	6	3	LESS THAN 30MPH	VERGE	1250	SINGLE ARM	LIGHT GREY	RIGID COLUMN	URBIS	AXIA 2 S1	PETITJEAN	SHEET STEEL	10	PAINTED	THAMES
46101858	HENDERSON AVENUE	Scunthorpe	488652.08	411831.4	10	7033	00198337	01/04/1991 00:00	6	3	LESS THAN 30MPH	BACK OF FOOTPATH	1500	SINGLE ARM	LIGHT GREY	RIGID COLUMN	URBIS	AXIA 2 S1	PETITJEAN	SHEET STEEL	8	PAINTED	THAMES
46101858	HENDERSON AVENUE	Scunthorpe	488685.57	411563.74	10FP	7009	00198313	01/04/1991 00:00	6	3	LESS THAN 30MPH	VERGE	1250	SINGLE ARM	LIGHT GREY	RIGID COLUMN	URBIS	AXIA 2 S1	PETITJEAN	SHEET STEEL	8	PAINTED	THAMES
46101858	HENDERSON AVENUE	Scunthorpe	488672.77	411821.26	11	7034	00198338	01/04/1991 00:00	6	3	LESS THAN 30MPH	BACK OF FOOTPATH	1500	SINGLE ARM	LIGHT GREY	RIGID COLUMN	URBIS	AXIA 2 S1	PETITJEAN	SHEET STEEL	8	PAINTED	THAMES
46101858	HENDERSON AVENUE	Scunthorpe	488667.66	411593.78	11	7010	00198314	01/04/1991 00:00	6	3	LESS THAN 30MPH	VERGE	1250	SINGLE ARM	LIGHT GREY	RIGID COLUMN	URBIS	AXIA 2 S1	PETITJEAN	SHEET STEEL	8	PAINTED	THAMES
46101858	HENDERSON AVENUE	Scunthorpe	488673.77	411623.79	12	7011	00198315	01/04/1991 00:00	6	3	LESS THAN 30MPH	VERGE	1250	SINGLE ARM	LIGHT GREY	RIGID COLUMN	URBIS	AXIA 2 S1	PETITJEAN	SHEET STEEL	8	PAINTED	THAMES
46101858	HENDERSON AVENUE	Scunthorpe	488689.09	411804.79	12	7035	00198339	01/04/1991 00:00	6	3	LESS THAN 30MPH	BACK OF FOOTPATH	1500	SINGLE ARM	LIGHT GREY	RIGID COLUMN	URBIS	AXIA 2 S1	PETITJEAN	SHEET STEEL	8	PAINTED	THAMES
46101858	HENDERSON AVENUE	Scunthorpe	488691.12	411773.55	13	7036	00198340	01/04/1991 00:00	6	3	LESS THAN 30MPH	VERGE	1500	SINGLE ARM	LIGHT GREY	RIGID COLUMN	URBIS	AXIA 2 S1	PETITJEAN	SHEET STEEL	8	PAINTED	THAMES
46101858	HENDERSON AVENUE	Scunthorpe	488655.13	411661.6	13	7012	00198316	01/04/1991 00:00	6	3	LESS THAN 30MPH	VERGE	1250	SINGLE ARM	LIGHT GREY	RIGID COLUMN	URBIS	AXIA 2 S1	PETITJEAN	SHEET STEEL	8	PAINTED	THAMES
46101858	HENDERSON AVENUE	Scunthorpe	488692.33	411734.2	14	7037	00198341	01/04/1991 00:00	6	3	LESS THAN 30MPH	BACK OF FOOTPATH	1500	SINGLE ARM	LIGHT GREY	RIGID COLUMN	URBIS	AXIA 2 S1	PETITJEAN	SHEET STEEL	8	PAINTED	THAMES
46101858	HENDERSON AVENUE	Scunthorpe	488660.2	411693.78	14	7013	00198317	01/04/1991 00:00	6	3	LESS THAN 30MPH	VERGE	1250	SINGLE ARM	LIGHT GREY	RIGID COLUMN	URBIS	AXIA 2 S1	PETITJEAN	SHEET STEEL	8	PAINTED	THAMES
46101858	HENDERSON AVENUE	Scunthorpe	488673.67	411712.69	15	7038	00198342	01/04/1991 00:00	6	3	LESS THAN 30MPH	BACK OF FOOTPATH	1500	SINGLE ARM	LIGHT GREY	RIGID COLUMN	URBIS	AXIA 2 S1	PETITJEAN	SHEET STEEL	8	PAINTED	THAMES
46101858	HENDERSON AVENUE	Scunthorpe	488609.96	411841.42	15	7014	00198318	01/04/1991 00:00	6	3	LESS THAN 30MPH	VERGE	1250	SINGLE ARM	LIGHT GREY	RIGID COLUMN	URBIS	AXIA 2 S1	PETITJEAN	SHEET STEEL	8	PAINTED	THAMES
46101858	HENDERSON AVENUE	Scunthorpe	488631.89	411769.09	16	7039	00198343	01/04/1991 00:00	6	3	NOT ON A ROAD	BACK OF FOOTPATH	0	POST TOP	LIGHT GREY	RIGID COLUMN	URBIS	AXIA 2 S1	PETITJEAN	SHEET STEEL	6	PAINTED	THAMES
46101858	HENDERSON AVENUE	Scunthorpe	488603.09	411868.66	16	7015	00198319	01/04/1991 00:00	6	3	LESS THAN 30MPH	VERGE	1250	SINGLE ARM	LIGHT GREY	RIGID COLUMN	URBIS	AXIA 2 S1	PETITJEAN	SHEET STEEL	8	PAINTED	THAMES
46101858	HENDERSON AVENUE	Scunthorpe	488606.08	411899.51	17	7016	00198320	11/11/2020 00:00	6	3	LESS THAN 30MPH	BACK OF FOOTPATH	1000	SINGLE ARM	NOT APPLICABLE	RIGID COLUMN	URBIS	AXIA 2 S1	MALLATITE	TUBULAR STEEL	8	GALVANISED	TUBULAR
46101858	HENDERSON AVENUE	Scunthorpe	488590.39	411915.47	18FP	7017	00198321	01/04/1991 00:00	6	3	LESS THAN 30MPH	VERGE	1250	SINGLE ARM	LIGHT GREY	RIGID COLUMN	URBIS	AXIA 2 S1	PETITJEAN	SHEET STEEL	8	PAINTED	THAMES
46101858	HENDERSON AVENUE	Scunthorpe	488591.63	411955.08	19	7018	00198322	01/04/1991 00:00	6	3	LESS THAN 30MPH	VERGE	1250	SINGLE ARM	LIGHT GREY	RIGID COLUMN	URBIS	AXIA 2 S1	PETITJEAN	SHEET STEEL	8	PAINTED	THAMES
46101858	HENDERSON AVENUE	Scunthorpe	488619.01	411702.68	2	7025	00198329	01/04/1991 00:00	6	3	LESS THAN 30MPH	BACK OF FOOTPATH	1500	SINGLE ARM	LIGHT GREY	RIGID COLUMN	URBIS	AXIA 2 S1	PETITJEAN	SHEET STEEL	8	PAINTED	THAMES
46101858	HENDERSON AVENUE	Scunthorpe	488716.04	411321.8	2	7001	00198305	01/04/1991 00:00	6	3	LESS THAN 30MPH	VERGE	1250	SINGLE ARM	LIGHT GREY	RIGID COLUMN	URBIS	AXIA 2 S1	PETITJEAN	SHEET STEEL	10	PAINTED	THAMES
46101858	HENDERSON AVENUE	Scunthorpe	488584.18	411981.94	20	7019	00198323	01/04/1991 00:00	6	3	LESS THAN 30MPH	VERGE	1250	SINGLE ARM	LIGHT GREY	RIGID COLUMN	URBIS	AXIA 2 S1	PETITJEAN	SHEET STEEL	8	PAINTED	THAMES
46101858	HENDERSON AVENUE	Scunthorpe	488570.55	411995.57	21	7020	00198324	01/04/1991 00:00	6	3	LESS THAN 30MPH	VERGE	1250	SINGLE ARM	LIGHT GREY	RIGID COLUMN	URBIS	AXIA 2 S1	PETITJEAN	SHEET STEEL	8	PAINTED	THAMES
46101858	HENDERSON AVENUE	Scunthorpe	488574.81	412020.3	22	7021	00198325	01/04/1991 00:00	6	3	LESS THAN 30MPH	VERGE	1250	SINGLE ARM	LIGHT GREY	RIGID COLUMN	URBIS	AXIA 2 S1	PETITJEAN	SHEET STEEL	8	PAINTED	THAMES
46101858	HENDERSON AVENUE	Scunthorpe	488555.13	412055.41	23	7022	00198326	01/04/1991 00:00	6	3	LESS THAN 30MPH	VERGE	1250	SINGLE ARM	LIGHT GREY	RIGID COLUMN	URBIS	AXIA 2 S1	PETITJEAN	SHEET STEEL	8	PAINTED	THAMES
46101858	HENDERSON AVENUE	Scunthorpe	488559.46	412080.73	24FP	7023	00198327	01/04/1991 00:00	6	3	LESS THAN 30MPH	VERGE	1250	SINGLE ARM	LIGHT GREY	RIGID COLUMN	URBIS	AXIA 2 S1	PETITJEAN	SHEET STEEL	8	PAINTED	THAMES
46101858	HENDERSON AVENUE	Scunthorpe	488711.95	411351.98	3	7002	00198306	01/04/1991 00:00	6	3	LESS THAN 30MPH	VERGE	1250	SINGLE ARM	LIGHT GREY	RIGID COLUMN	URBIS	AXIA 2 S1	PETITJEAN	SHEET STEEL	10	PAINTED	THAMES
46101858	HENDERSON AVENUE	Scunthorpe	488598.72	411722.56	3	7026	00198330	01/04/1991 00:00	6	3	LESS THAN 30MPH	VERGE	1500	SINGLE ARM	LIGHT GREY	RIGID COLUMN	URBIS	AXIA 2 S1	PETITJEAN	SHEET STEEL	8	PAINTED	THAMES
46101858	HENDERSON AVENUE	Scunthorpe	488706.03	411389.5	4	7003	00198307	01/04/1991 00:00	6	3	LESS THAN 30MPH	VERGE	1250	SINGLE ARM	LIGHT GREY	RIGID COLUMN	URBIS	AXIA 2 S1	PETITJEAN	SHEET STEEL	10	PAINTED	THAMES
46101858	HENDERSON AVENUE	Scunthorpe	488578.03	411733.92	4	7027	00198331	01/04/1991 00:00	6	3	LESS THAN 30MPH	FRONT OF FOOTPATH	1500	SINGLE ARM	LIGHT GREY	RIGID COLUMN	URBIS	AXIA 2 S1	PETITJEAN	SHEET STEEL	8	PAINTED	THAMES
46101858	HENDERSON AVENUE	Scunthorpe	488578.03	411758.26	5	7028	00198332	01/04/1991 00:00	6	3	LESS THAN 30MPH	VERGE	1500	SINGLE ARM	LIGHT GREY	RIGID COLUMN	URBIS	AXIA 2 S1	PETITJEAN	SHEET STEEL	8	PAINTED	THAMES
46101858	HENDERSON AVENUE	Scunthorpe	488701.73	411412.8	5	7004	00198308	01/04/1991 00:00	6	3	LESS THAN 30MPH	FRONT OF FOOTPATH	1250	SINGLE ARM	LIGHT GREY	RIGID COLUMN	URBIS	AXIA 2 S1	PETITJEAN	SHEET STEEL	10	PAINTED	THAMES
46101858

46101871	HOLME DRIVE	Burton upon Stather Parish	487059.11	418074.21	3	7002	00198487	01/04/2005 00:00	2	3	LESS THAN 30MPH	VERGE	0	POST TOP	NOT APPLICABLE	RIGID COLUMN	URBIS	AXIA 2 S1	PETITJEAN	SHEET STEEL	5	GALVANISED	NIDD
46101871	HOLME DRIVE	Burton upon Stather Parish	487065.46	418100.36	4	7003	00198488	01/04/2005 00:00	2	3	LESS THAN 30MPH	BACK OF FOOTPATH	0	POST TOP	NOT APPLICABLE	RIGID COLUMN	URBIS	AXIA 2 S1	PETITJEAN	SHEET STEEL	5	GALVANISED	NIDD
46101871	HOLME DRIVE	Burton upon Stather Parish	487025.27	418144.1	5	7004	00198489	01/04/1980 00:00	2	3	LESS THAN 30MPH	BACK OF FOOTPATH	0	POST TOP	NOT APPLICABLE	RIGID COLUMN	URBIS	AXIA 2 S1	PETITJEAN	SHEET STEEL	5	GALVANISED	NIDD
46101871	HOLME DRIVE	Burton upon Stather Parish	487017.61	418165.81	6	7005	00198490	01/04/1980 00:00	2	3	LESS THAN 30MPH	BACK OF FOOTPATH	0	POST TOP	NOT APPLICABLE	RIGID COLUMN	URBIS	AXIA 2 S1	PETITJEAN	SHEET STEEL	5	GALVANISED	NIDD
46101871	HOLME DRIVE	Burton upon Stather Parish	487019.14	418201.07	7	7006	00198491	01/04/1980 00:00	2	3	LESS THAN 30MPH	BACK OF FOOTPATH	0	POST TOP	NOT APPLICABLE	RIGID COLUMN	URBIS	AXIA 2 S1	PETITJEAN	SHEET STEEL	5	GALVANISED	NIDD
46101871	HOLME DRIVE	Burton upon Stather Parish	487042.19	418217.8	8	7007	00198492	01/04/1980 00:00	2	3	LESS THAN 30MPH	BACK OF FOOTPATH	0	POST TOP	NOT APPLICABLE	RIGID COLUMN	URBIS	AXIA 2 S1	PETITJEAN	SHEET STEEL	5	GALVANISED	NIDD
46101871	HOLME DRIVE	Burton upon Stather Parish	487080.58	418223.59	9	7008	00198493	01/04/1980 00:00	2	3	LESS THAN 30MPH	BACK OF FOOTPATH	0	POST TOP	NOT APPLICABLE	RIGID COLUMN	URBIS	AXIA 2 S1	PETITJEAN	SHEET STEEL	5	GALVANISED	NIDD
46101874	HORBURY CLOSE	Scunthorpe	487793.06	411881.22	1	7000	00198509	01/04/2004 00:00	2	3	LESS THAN 30MPH	BACK OF FOOTPATH	0	POST TOP	NOT APPLICABLE	RIGID COLUMN	URBIS	AXIA 2 S1	MALLATITE	TUBULAR STEEL	5	GALVANISED	STEPPED TUBULAR
46101874	HORBURY CLOSE	Scunthorpe	487810.16	411870.66	2	7001	00198510	01/04/2004 00:00	2	3	LESS THAN 30MPH	BACK OF FOOTPATH	0	POST TOP	NOT APPLICABLE	RIGID COLUMN	URBIS	AXIA 2 S1	MALLATITE	TUBULAR STEEL	5	GALVANISED	STEPPED TUBULAR
46101874	HORBURY CLOSE	Scunthorpe	487807.4	411897.82	3	7002	00198511	01/04/2004 00:00	2	3	LESS THAN 30MPH	VERGE	0	POST TOP	NOT APPLICABLE	RIGID COLUMN	URBIS	AXIA 2 S1	MALLATITE	TUBULAR STEEL	5	GALVANISED	STEPPED TUBULAR
46101875	HORSTEAD AVENUE	Brigg Parish	500646.51	408113.73	1	7000	00198512	23/08/2019 00:00	2	3	LESS THAN 30MPH	BACK OF FOOTPATH	0	POST TOP	NOT APPLICABLE	RIGID COLUMN	URBIS	AXIA 2 S1	MALLATITE	TUBULAR STEEL	6	GALVANISED	TUBULAR
46101875	HORSTEAD AVENUE	Brigg Parish	500656	408292	10	7010	04200213	17/09/2018 00:00	2	3	NOT ON A ROAD	BACK OF FOOTPATH	0	POST TOP	NOT APPLICABLE	MID HINGED	URBIS	AXIA 2 S1	MALLATITE	STEEL	6	GALVANISED	LEVEN
46101875	HORSTEAD AVENUE	Brigg Parish	500644	408316	11	7011	04200214	17/09/2018 00:00	2	3	NOT ON A ROAD	BACK OF FOOTPATH	0	POST TOP	NOT APPLICABLE	MID HINGED	URBIS	AXIA 2 S1	MALLATITE	STEEL	6	GALVANISED	LEVEN
46101875	HORSTEAD AVENUE	Brigg Parish	500601.41	408300.08	12	7007	00198519	23/08/2019 00:00	2	3	LESS THAN 30MPH	FRONT OF FOOTPATH	0	POST TOP	NOT APPLICABLE	RIGID COLUMN	URBIS	AXIA 2 S1	MALLATITE	TUBULAR STEEL	6	GALVANISED	TUBULAR
46101875	HORSTEAD AVENUE	Brigg Parish	500641.33	408146.64	2	7001	00198513	23/08/2019 00:00	2	3	LESS THAN 30MPH	BACK OF FOOTPATH	0	POST TOP	NOT APPLICABLE	RIGID COLUMN	URBIS	AXIA 2 S1	MALLATITE	TUBULAR STEEL	6	GALVANISED	TUBULAR
46101875	HORSTEAD AVENUE	Brigg Parish	500632.45	408175.18	3	7002	00198514	23/08/2019 00:00	2	3	LESS THAN 30MPH	BACK OF FOOTPATH	0	POST TOP	NOT APPLICABLE	RIGID COLUMN	URBIS	AXIA 2 S1	MALLATITE	TUBULAR STEEL	6	GALVANISED	TUBULAR
46101875	HORSTEAD AVENUE	Brigg Parish	500622.8	408207.52	4	7003	00198515	23/08/2019 00:00	2	3	LESS THAN 30MPH	BACK OF FOOTPATH	0	POST TOP	NOT APPLICABLE	RIGID COLUMN	URBIS	AXIA 2 S1	MALLATITE	TUBULAR STEEL	6	GALVANISED	TUBULAR
46101875	HORSTEAD AVENUE	Brigg Parish	500626.38	408238.07	5	7004	00198516	23/08/2019 00:00	2	3	LESS THAN 30MPH	FRONT OF FOOTPATH	0	POST TOP	NOT APPLICABLE	RIGID COLUMN	URBIS	AXIA 2 S1	MALLATITE	TUBULAR STEEL	6	GALVANISED	TUBULAR
46101875	HORSTEAD AVENUE	Brigg Parish	500675	408257	6	7008	04200211	17/09/2018 00:00	2	3	NOT ON A ROAD	BACK OF FOOTPATH	0	POST TOP	NOT APPLICABLE	MID HINGED	URBIS	AXIA 2 S1	MALLATITE	STEEL	6	GALVANISED	LEVEN
46101875	HORSTEAD AVENUE	Brigg Parish	500647	408262	7	7009	04200212	17/09/2018 00:00	2	3	NOT ON A ROAD	BACK OF FOOTPATH	0	POST TOP	NOT APPLICABLE	MID HINGED	URBIS	AXIA 2 S1	MALLATITE	STEEL	6	GALVANISED	LEVEN
46101875	HORSTEAD AVENUE	Brigg Parish	500606.21	408264.35	8	7005	00198517	23/08/2019 00:00	2	3	LESS THAN 30MPH	BACK OF FOOTPATH	0	POST TOP	NOT APPLICABLE	RIGID COLUMN	URBIS	AXIA 2 S1	MALLATITE	TUBULAR STEEL	6	GALVANISED	TUBULAR
46101875	HORSTEAD AVENUE	Brigg Parish	500625.01	408282.76	9	7006	00198518	23/08/2019 00:00	2	3	LESS THAN 30MPH	FRONT OF FOOTPATH	0	POST TOP	NOT APPLICABLE	RIGID COLUMN	URBIS	AXIA 2 S1	MALLATITE	TUBULAR STEEL	6	GALVANISED	TUBULAR
46101876	HUMBER ROAD	South Killingholme Parish	517065	416639	1	7027	00211908	01/04/2017 00:00	3	1	BETWEEN 30-50 MPH	VERGE	0	POST TOP	NOT APPLICABLE	RIGID COLUMN	PHILIPS	LUMA 2A 12.5 KL	VALMONT ST	TUBULAR STEEL	8	GALVANISED	TUBULAR
46101876	HUMBER ROAD	South Killingholme Parish	515331.37	416071.52	1	7021	00198541	01/04/1980 00:00	3	1	LESS THAN 30MPH	FRONT OF FOOTPATH	0	POST TOP	MID GREY	RIGID COLUMN	URBIS	AXIA 2 S1	FABRIKAT	TUBULAR STEEL	5	PAINTED	5M01A
46101876	HUMBER ROAD	South Killingholme Parish	517298	416714	10	7036	00211917	01/04/2017 00:00	3	1	BETWEEN 30-50 MPH	VERGE	0	POST TOP	NOT APPLICABLE	RIGID COLUMN	PHILIPS	LUMA 2A 12.5 KL	VALMONT ST	TUBULAR STEEL	8	GALVANISED	TUBULAR
46101876	HUMBER ROAD	South Killingholme Parish	517305.86	416734.92	11	7037	00211918	01/04/2017 00:00	3	1	BETWEEN 30-50 MPH	VERGE	0	POST TOP	NOT APPLICABLE	RIGID COLUMN	PHILIPS	LUMA 2A 12.5 KL	VALMONT ST	TUBULAR STEEL	8	GALVANISED	TUBULAR
46101876	HUMBER ROAD	South Killingholme Parish	517343.12	416730.15	13	7011	00198531	01/04/2004 00:00	3	1	BETWEEN 30-50 MPH	VERGE	2000	SINGLE ARM	MID GREY	RIGID COLUMN	URBIS	AXIA 2 S1	PETITJEAN	SHEET STEEL	10	PAINTED	THAMES
46101876	HUMBER ROAD	South Killingholme Parish	517375.77	416726.45	14	7012	00198532	01/04/2004 00:00	3	1	BETWEEN 30-50 MPH	VERGE	2000	SINGLE ARM	MID GREY	RIGID COLUMN	URBIS	AXIA 2 S1	PETITJEAN	SHEET STEEL	10	PAINTED	THAMES
46101876	HUMBER ROAD	South Killingholme Parish	517402.81	416719.68	15	7013	00198533	01/04/2004 00:00	3	1	BETWEEN 30-50 MPH	VERGE	2000	SINGLE ARM	MID GREY	RIGID COLUMN	URBIS	AXIA 2 S1	PETITJEAN	SHEET STEEL	10	PAINTED	THAMES
46101876	HUMBER ROAD	South Killingholme Parish	517432.75	416712.03	16	7014	00198534	01/04/2004 00:00	3	1	BETWEEN 30-50 MPH	VERGE	2000	SINGLE ARM	MID GREY	RIGID COLUMN	URBIS	AXIA 2 S1	PETITJEAN	SHEET STEEL	10	PAINTED	THAMES
46101876	HUMBER ROAD	South Killingholme Parish	517463.32	416702.19	17	7015	00198535	01/04/2004 00:00	3	1	BETWEEN 30-50 MPH	VERGE	2000	SINGLE ARM	MID GREY	RIGID COLUMN	URBIS	AXIA 2 S1	PETITJEAN	SHEET STEEL	10	PAINTED	THAMES
46101876	HUMBER ROAD	South Killingholme Parish	517502.96	416689.78	18	7016	00198536	01/04/2004 00:00	3	1	BETWEEN 30-50 MPH	VERGE	2000	SINGLE ARM	MID GREY	RIGID COLUMN	URBIS	AXIA 2 S1	PETITJEAN	SHEET STEEL	10	PAINTED	THAMES
46101876	HUMBER ROAD	South Killingholme Parish	517545.93	416675.13	19	7017	00198537	01/04/2004 00:00	3	1	BETWEEN 30-50 MPH	VERGE	2000	SINGLE ARM	MID GREY	RIGID COLUMN	URBIS	AXIA 2 S1	PETITJEAN	SHEET STEEL	10	PAINTED	THAMES
46101876	HUMBER ROAD	South Killingholme Parish	515364.5	416085.3	2	7022	00198542	01/04/1980 00:00	3	1	LESS THAN 30MPH	FRONT OF FOOTPATH	0	POST TOP	MID GREY	RIGID COLUMN	URBIS	AXIA 2 S1	FABRIKAT	TUBULAR STEEL	5	PAINTED	5M01A
46101876	HUMBER ROAD	South Killingholme Parish	517093	416659	2	7028	00211909	01/04/2017 00:00	3	1	BETWEEN 30-50 MPH	VERGE	0	POST TOP	NOT APPLICABLE	RIGID COLUMN	PHILIPS	LUMA 2A 12.5 KL	VALMONT ST	TUBULAR STEEL	8	GALVANISED	TUBULAR
46101876	HUMBER ROAD	South Killingholme Parish	517593.93	416659.13	20	7019	00198539	01/04/2004 00:00	3	1	BETWEEN 30-50 MPH	VERGE	2000	SINGLE ARM	MID GREY	RIGID COLUMN	URBIS	AXIA 2 S1	PETITJEAN	SHEET STEEL	10	PAINTED	THAMES
46101876	HUMBER ROAD	South Killingholme Parish	517641.17	416643.28	21	7020	00198540	01/04/2004 00:00	3	1	BETWEEN 30-50 MPH	VERGE	2000	SINGLE ARM	MID GREY	RIGID COLUMN	URBIS	AXIA 2 S1	PETITJEAN	SHEET STEEL	10	PAINTED	THAMES
46101876	HUMBER ROAD	South Killingholme Parish	515391.6	416094.4	3	7023	00198543	01/04/1980 00:00	3	1	LESS THAN 30MPH	FRONT OF FOOTPATH	0	POST TOP	MID GREY	RIGID COLUMN	URBIS	AXIA 2 S1	FABRIKAT	TUBULAR STEEL	5	PAINTED	5M01A
46101876	HUMBER ROAD	South Killingholme Parish	517127	416670	3	7029	00211910	01/04/2017 00:00	3	1	BETWEEN 30-50 MPH	VERGE	0	POST TOP	NOT APPLICABLE	RIGID COLUMN	PHILIPS	LUMA 2A 12.5 KL	VALMONT ST	TUBULAR STEEL	8	GALVANISED	TUBULAR
46101876	HUMBER ROAD	South Killingholme Parish	515431.7	416108.5	4	7024	00198544	01/04/2017 00:00	3	1	LESS THAN 30MPH	FRONT OF FOOTPATH	0	POST TOP	NOT APPLICABLE	MID HINGED	PHILIPS	MINI LUMA 3.8 KL	VALMONT ST	TUBULAR STEEL	6	GALVANISED	Not Applicable
46101876	HUMBER ROAD	South Killingholme Parish	517145	416675	4	7030	00211911	01/04/2017 00:00	3	1	BETWEEN 30-50 MPH	VERGE	0	POST TOP	NOT APPLICABLE	RIGID COLUMN	PHILIPS	LUMA 2A 6.6 KL	VALMONT ST	TUBULAR STEEL	5	GALVANISED	TUBULAR
46101876	HUMBER ROAD	South Killingholme Parish	517161	416681	5	7031	00211912	01/04/2017 00:00	3	1	BETWEEN 30-50 MPH	VERGE	0	POST TOP	NOT APPLICABLE	RIGID COLUMN	PHILIPS	LUMA 2A 12.5 KL	VALMONT ST	TUBULAR STEEL	8	GALVANISED	TUBULAR
46101876	HUMBER ROAD	South Killingholme Parish	515449.4	416114	5	7025	00198545	01/04/1980 00:00	3	1	LESS THAN 30MPH	FRONT OF FOOTPATH	0	POST TOP	MID GREY	RIGID COLUMN	URBIS	AXIA 2 S1	FABRIKAT	TUBULAR STEEL	5	PAINTED	5M01A
46101876	HUMBER ROAD	South Killingholme Parish	517195	416692	6	7032	00211913	01/04/2017 08:00	3	1	BETWEEN 30-50 MPH	VERGE	0	POST TOP	NOT APPLICABLE	RIGID COLUMN	PHILIPS	LUMA 2A 12.5 KL	VALMONT ST	TUBULAR STEEL	8	GALVANISED	TUBULAR
46101876	HUMBER ROAD	South Killingholme Parish	515476.1	416123.1	6	7026	00198546	01/04/1980 00:00	3	1	LESS THAN 30MPH	FRONT OF FOOTPATH	0	POST TOP	MID GREY	RIGID COLUMN	URBIS	AXIA 2 S1	FABRIKAT	TUBULAR STEEL	5	PAINTED	5M01A
46101876	HUMBER ROAD	South Killingholme Parish	517228	416702	7	7033	00211914	01/04/2017 00:00	3	1	BETWEEN 30-50 MPH	VERGE	0	POST TOP	NOT APPLICABLE	RIGID COLUMN	PHILIPS	LUMA 2A 12.5 KL	VALMONT ST	TUBULAR STEEL	8	GALVANISED	TUBULAR
46101876	HUMBER ROAD	South Killingholme Parish	517263	416709	8	7034	00211915	01/04/2017 00:00	3	1	BETWEEN 30-50 MPH	VERGE	0	POST TOP	NOT APPLICABLE	RIGID COLUMN	PHILIPS	LUMA 2A 12.5 KL	VALMONT ST	TUBULAR STEEL	8	GALVANISED	TUBULAR
46101876	HUMBER ROAD	South Killingholme Parish	517268	416730	9	7035	00211916	01/04/2017 00:00	3	1	BETWEEN 30-50 MPH	VERGE	0	POST TOP	NOT APPLICABLE	RIGID COLUMN	PHILIPS	LUMA 2A 12.5 KL	VALMONT ST	TUBULAR STEEL	8	GALVANISED	TUBULAR
46101877	HUNTERS CROFT	Haxey Parish	477138	400253.42	1	7000	00198547	01/04/1987 00:00	6	2	LESS THAN 30MPH	BACK OF FOOTPATH	0	POST TOP	NOT APPLICABLE	RIGID COLUMN	URBIS	AXIA 2 S1	PETITJEAN	SHEET STEEL	5	GALVANISED	NIDD
46101877	HUNTERS CROFT	Haxey Parish	477127.43	400058.15	10	7009	00198556	01/04/1988 00:00	6	2	LESS THAN 30MPH	VERGE	0	POST TOP	NOT APPLICABLE	RIGID COLUMN	URBIS	AXIA 2 S1	PETITJEAN	SHEET STEEL	5	GALVANISED	NIDD
46101877	HUNTERS CROFT	Haxey Parish	477101.08	400053.04	11	7010	00198557	01/04/1988 00:00	6	2	LESS THAN 30MPH	BACK OF FOOTPATH	0	POST TOP	NOT APPLICABLE	RIGID COLUMN	URBIS	AXIA 2 S1	PETITJEAN	SHEET STEEL	5	GALVANISED	NIDD
46101877	HUNTERS CROFT	Haxey Parish	477154.67	400232.46	2	7001	00198548	01/04/1987 00:00	6	2	LESS THAN 30MPH	BACK OF FOOTPATH	0	POST TOP	NOT APPLICABLE	RIGID COLUMN	URBIS	AXIA 2 S1	PETITJEAN	SHEET STEEL	5	GALVANISED	NIDD
46101877	HUNTERS CROFT	Haxey Parish	477168.37	400209.18	3	7002	00198549	01/04/1987 00:00	6	2	LESS THAN 30MPH	BACK OF FOOTPATH	0	POST TOP	NOT APPLICABLE	RIGID COLUMN	URBIS	AXIA 2 S1	PETITJEAN	SHEET STEEL	5	GALVANISED	NIDD
46101877	HUNTERS CROFT	Haxey Parish	477158.96	400182.57	4	7003	00198550	01/04/1987 00:00	6	2	LESS THAN 30MPH	BACK OF FOOTPATH	0	POST TOP	NOT APPLICABLE	RIGID COLUMN	URBIS	AXIA 2 S1	PETITJEAN	SHEET STEEL	5	GALVANISED	NIDD
46101877	HUNTERS CROFT	Haxey Parish	477158.1	400163.61	5	7004	00198551	01/04/1987 00:00	6	2	LESS THAN 30MPH	BACK OF FOOTPATH	0	POST TOP	NOT APPLICABLE	RIGID COLUMN	URBIS	AXIA 2 S1	PETITJEAN	SHEET STEEL	5	GALVANISED	NIDD
46101877	HUNTERS CROFT	Haxey Parish	477172.08	400128.93	6	7005	00198552	01/04/1987 00:00	6	2	LESS THAN 30MPH	BACK OF FOOTPATH	0	POST TOP	NOT APPLICABLE	RIGID COLUMN	URBIS	AXIA 2 S1	PETITJEAN	SHEET STEEL	5	GALVANISED	NIDD
46101877	HUNTERS CROFT	Haxey Parish	477174.66	400099.95	7	7006	00198553	01/04/1988 00:00	6	2	LESS THAN 30MPH	VERGE	0	POST TOP	NOT APPLICABLE	RIGID COLUMN	URBIS	AXIA 2 S1	PETITJEAN	SHEET STEEL	5	GALVANISED	NIDD
46101877	HUNTERS CROFT	Haxey Parish	477182.44	400075.35	8	7007	00198554	01/04/1988 00:00	6	2	LESS THAN 30MPH	VERGE	0	POST TOP	NOT APPLICABLE	RIGID COLUMN	URBIS	AXIA 2 S1	PETITJEAN	SHEET STEEL	5	GALVANISED	NIDD
46101877	HUNTERS CROFT	Haxey Parish	477154.21	400071.05	9	7008	00198555	01/04/1988 00:00	6	2	LESS THAN 30MPH	VERGE	0	POST TOP	NOT APPLICABLE	RIGID COLUMN	URBIS	AXIA 2 S1	PETITJEAN	SHEET STEEL	5	GALVANISED	NIDD
46101878	HUNTS LANE	Hibaldstow Parish	497737.9	402941.91	1	7000	00198558	01/04/1982 00:00	1	4	LESS THAN 30MPH	VERGE	1000	SINGLE ARM	MID GREY	RIGID COLUMN	URBIS	AXIA 2 S1	PETITJEAN	SHEET STEEL	8	PAINTED	THAMES
46101878	HUNTS LANE	Hibaldstow Parish	497743.46	402916.44	2	7001	00198559	01/04/1980 00:00	1	4	LESS THAN 30MPH	ON POLE	500	SINGLE ARM	NOT APPLICABLE	POLE MOUNTED	URBIS	AXIA 2 S1	WOODEN PO	WOOD	5	NOT APPLICABI	Not Applicable
46101878	HUNTS LANE	Hibaldstow Parish	497748.3	402871.79	3	7002	00198560	01/04/1980 00:00	1	4	LESS THAN 30MPH	ON POLE	500	SINGLE ARM	NOT APPLICABLE	POLE MOUNTED	URBIS	AXIA 2 S1	WOODEN PO	WOOD	5	NOT APPLICABI	Not Applicable
46101878	HUNTS LANE	Hibaldstow Parish	497754.25	402824.33	4	7003	00198561	01/04/1980 00:00	1	4	LESS THAN 30MPH	ON POLE	500	SINGLE ARM	NOT APPLICABLE	POLE MOUNTED	URBIS	AXIA 2 S1	WOODEN PO	WOOD	5	NOT APPLICABI	Not Applicable
46101878	HUNTS LANE	Hibaldstow Parish	497759.08	402786.02	5	7004	00198562	01/04/1980 00:00	1	4	LESS THAN 30MPH	ON POLE	500	SINGLE ARM	NOT APPLICABLE	POLE MOUNTED	URBIS	AXIA 2 S1	WOODEN PO	WOOD	5	NOT APPLICABI	Not Applicable
46101878	HUNTS LANE	Hibaldstow Parish	497761.47	402760.25	6	7005	00198563	01/04/1980 00:00	1	4	LESS THAN 30MPH	ON POLE	500	SINGLE ARM	NOT APPLICABLE	POLE MOUNTED	URBIS	AXIA 2 S1	WOODEN PO	WOOD	5	NOT APPLICABI	Not Applicable
46101878	HUNTS LANE	Hibaldstow Parish	497755.88	402722.87	7	7006	00198564	01/04/1980 00:00	1	4	LESS THAN 30MPH	ON POLE	500	SINGLE ARM	NOT APPLICABLE	POLE MOUNTED	URBIS	AXIA 2 S1	WOODEN PO	WOOD	5	NOT APPLICABI	Not Applicable
46101879	INGS LANE	Hibaldstow Parish	498009.15	402664.34	1	7000	00198565	01/04/2010 00:00	1	4	LESS THAN 30MPH	BACK OF FOOTPATH	0	POST TOP	NOT APPLICABLE	RIGID COLUMN	URBIS	AXIA 2 S1	MALLATITE	TUBULAR STEEL	6	GALVANISED	TUBULAR
46101879	INGS LANE	Hibaldstow Parish	498316.33	402752.57	10	7010	00198575	07/02/2019 00:00	1	4	LESS THAN 30MPH	BACK OF FOOTPATH	0	POST TOP	NOT APPLICABLE	RIGID COLUMN	URBIS	AXIA 2 S1	MALLATITE	TUBULAR STEEL	6	GALVANISED	TUBULAR
46101879	INGS LANE	Hibaldstow Parish	498321.47	402725.15	11	7009	00198574	07/02/2019 00:00	1	4	LESS THAN 30MPH	VERGE	0	POST TOP	NOT APPLICABLE	RIGID COLUMN	URBIS	AXIA 2 S1	MALLATITE	TUBULAR STEEL	6	GALVANISED	TUBULAR
46101879	INGS LANE	Hibaldstow Parish	498347.67	402694.64	12	7011	00198576	01/04/2017 00:00	1	4	LESS THAN 30MPH	BACK OF FOOTPATH	0	POST TOP	NOT APPLICABLE	RIGID COLUMN	URBIS	AXIA 2 S1	MALLATITE	TUBULAR STEEL	6	GALVANISED	TUBULAR
46101879	INGS LANE	Hibaldstow Parish	498382.17	402695.11	13	7012	00198577	01/04/2010 00:00	1	4	LESS THAN 30MPH	BACK OF FOOTPATH	0	POST TOP	NOT APPLICABLE	RIGID COLUMN	URBIS	AXIA 2 S1	MALLATITE	TUBULAR STEEL	6	GALVANISED	TUBULAR
46101879	INGS LANE	Hibaldstow Parish	498522.08	402690.66	14	7013	00198578	01/04/1980 00:00	1	4	GREATER THAN 50MPH	ON POLE	500	SINGLE ARM	NOT APPLICABLE	POLE MOUNTED	URBIS	AXIA 2 S1	WOODEN PO	WOOD	5	NOT APPLICABI	Not Applicable
46101879	INGS LANE	Hibaldstow Parish	498599.95	402695.1	15	7014	00198579	01/04/1980 00:00	1	4	GREATER THAN 50MPH	ON POLE	500	SINGLE ARM	NOT APPLICABLE	POLE MOUNTED	URBIS	AXIA 2 S1	WOODEN PO	WOOD	5	NOT APPLICABI	Not Applicable
46101879	INGS LANE	Hibaldstow Parish	498665.82	402701.2	16	7015	00198580	01/04/1980 00:00	1	4	GREATER THAN 50MPH	ON POLE	500	SINGLE ARM	NOT APPLICABLE	POLE MOUNTED	URBIS	AXIA 2 S1	WOODEN PO	WOOD	5	NOT APPLICABI	Not Applicable
46101879	INGS LANE	Hibaldstow Parish	498047.33	402667.5	2	7001	00198566	01/04/1980 00:00	1	4	LESS THAN 30MPH	BACK OF FOOTPATH	300	SINGLE ARM	LIGHT GREY	RIGID COLUMN	URBIS	AXIA 2 S1	PETITJEAN	SHEET STEEL	5	PAINTED	DAER
46101879	INGS LANE	Hibaldstow Parish	498078.01	402657.76	3	7002	00198567	01/04/2010 00:00	1	4	LESS THAN 30MPH	BACK OF FOOTPATH	0	POST TOP	NOT APPLICABLE	RIGID COLUMN	URBIS	AXIA 2 S1	MALLATITE	TUBULAR STEEL	6	GALVANISED	TUBULAR
46101879	INGS LANE	Hibaldstow Parish	498114.19	402660.14	4	7003	00198568	01/04/1980 00:00	1	4	LESS THAN 30MPH	BACK OF FOOTPATH	0	POST TOP	NOT APPLICABLE	RIGID COLUMN	URBIS	AXIA 2 S1	T AND L	TUBULAR STEEL	5	GALVANISED	STEPPED TUBULAR
46101879	INGS LANE	Hibaldstow Parish	498156.05	402669.79	5	7004	00198569	01/04/2010 00:00	1	4	LESS THAN 30MPH	BACK OF FOOTPATH	0	POST TOP	NOT APPLICABLE	RIGID COLUMN	URBIS	AXIA 2 S1	MALLATITE	TUBULAR STEEL	6	GALVANISED	TUBULAR
46101879	INGS LANE	Hibaldstow Parish	498188.46	402675.41	6	7005	00198570	01/04/1980 00:00	1	4	LESS THAN 30MPH	BACK OF FOOTPATH	0	POST TOP	NOT APPLICABLE	RIGID COLUMN	URBIS	AXIA 2 S1	T AND L	TUBULAR STEEL	5	GALVANISED	STEPPED TUBULAR
46101879	INGS LANE	Hibaldstow Parish	498228.21	402679.54	7	7006	00198571	01/04/2010 00:00	1	4	LESS THAN 30MPH	BACK OF FOOTPATH	0	POST TOP	NOT APPLICABLE	RIGID COLUMN	URBIS	AXIA 2 S1	MALLATITE	TUBULAR STEEL	6	GALVANISED	TUBULAR
46101879	INGS LANE	Hibaldstow Parish	498268.22	402691.24	8	7007	00198572	01/04/2010 00:00	1	4	LESS THAN 30MPH	BACK OF FOOTPATH	0	POST TOP	NOT APPLICABLE	RIGID COLUMN	URBIS	AXIA 2 S1	MALLATITE	TUBULAR STEEL	6	GALVANISED	TUBULAR
46101879	INGS LANE	Hibaldstow Parish	498308.53	402692.63	9	7008	00198573	07/02/2019 00:00	1	4	LESS THAN 30MPH	VERGE	0	POST TOP	NOT APPLICABLE	RIGID COLUMN	URBIS	AXIA 2 S1	MALLATITE	TUBULAR STEEL	6	GALVANISED	TUBULAR
46101880	ISLE CLOSE	Crowle Parish	477337.07	413540.95	1	7000	00198581	01/04/1994 00:00	5	1	LESS THAN 30MPH	BACK OF FOOTPATH	0	POST TOP	NOT APPLICABLE	RIGID COLUMN	URBIS	AXIA 2 S1	PETITJEAN	SHEET STEEL	5	GALVANISED	NIDD
46101880	ISLE CLOSE	Crowle Parish	477425.98	413645.42	10	7009	00198590	01/04/1994 00:00	5	1	LESS THAN 30MPH	VERGE	0	POST TOP	NOT APPLICABLE	RIGID COLUMN	URBIS	AXIA 2 S1	T AND L	TUBULAR STEEL	5	GALVANISED	OTHER
46101880	ISLE CLOSE	Crowle Parish	477453.4	413640.31	11	7010	00198591	01/04/1994 00:00	5	1	LESS THAN 30MPH	VERGE	0	POST TOP	NOT APPLICABLE	RIGID COLUMN	URBIS	AXIA 2 S1	PETITJEAN	SHEET STEEL	5	GALVANISED	NIDD
46101880	ISLE CLOSE	Crowle Parish	477366	413533.08	2	7001	00198582	01/04/1980 00:00	5	1	LESS THAN 30MPH	BACK OF FOOTPATH	0	POST TOP	NOT APPLICABLE	RIGID COLUMN	URBIS	AXIA 2 S1	PETITJEAN	SHEET STEEL	5	GALVANISED	NIDD
46101880	ISLE CLOSE	Crowle Parish	477390.19	413534.15	3	7002	00198583	01/04/1980 00:00	5	1	LESS THAN 30MPH	BACK OF FOOTPATH	0	POST TOP	NOT APPLICABLE	RIGID COLUMN	URBIS	AXIA 2 S1	PETITJEAN	SHEET STEEL	5	GALVANISED	NIDD
46101880	ISLE CLOSE	Crowle Parish	477410.51	413554.54	4	7003	00198584	01/04/1988 00:00	5	1	LESS THAN 30MPH	BACK OF FOOTPATH	0	POST TOP	NOT APPLICABLE	RIGID COLUMN	URBIS	AXIA 2 S1	PETITJEAN	SH

46101892	LANCASTER ROAD	Scunthorpe	489418.96	408313.88	11	7010	00198775	01/04/1989 00:00	1	3	LESS THAN 30MPH	BACK OF FOOTPATH	800	SINGLE ARM	NOT APPLICABLE	RIGID COLUMN	URBIS	AXIA 2 S1	PETITJEAN	SHEET STEEL	6	GALVANISED	DAER
46101892	LANCASTER ROAD	Scunthorpe	489393.06	408323.71	12	7011	00198776	01/04/1989 00:00	1	3	LESS THAN 30MPH	BACK OF FOOTPATH	800	SINGLE ARM	NOT APPLICABLE	RIGID COLUMN	URBIS	AXIA 2 S1	PETITJEAN	SHEET STEEL	6	GALVANISED	DAER
46101892	LANCASTER ROAD	Scunthorpe	489362.86	408322.8	13	7012	00198777	01/04/1989 00:00	1	3	LESS THAN 30MPH	BACK OF FOOTPATH	800	SINGLE ARM	NOT APPLICABLE	RIGID COLUMN	URBIS	AXIA 2 S1	PETITJEAN	SHEET STEEL	6	GALVANISED	DAER
46101892	LANCASTER ROAD	Scunthorpe	489330.9	408320.87	14	7013	00198778	01/04/1989 00:00	1	3	LESS THAN 30MPH	BACK OF FOOTPATH	800	SINGLE ARM	NOT APPLICABLE	RIGID COLUMN	URBIS	AXIA 2 S1	PETITJEAN	SHEET STEEL	6	GALVANISED	DAER
46101892	LANCASTER ROAD	Scunthorpe	489302.92	408316.37	15	7014	00198779	01/04/1989 00:00	1	3	LESS THAN 30MPH	BACK OF FOOTPATH	800	SINGLE ARM	NOT APPLICABLE	RIGID COLUMN	URBIS	AXIA 2 S1	PETITJEAN	SHEET STEEL	6	GALVANISED	DAER
46101892	LANCASTER ROAD	Scunthorpe	489367.52	408299.55	16	7015	00198780	01/04/1989 00:00	1	3	LESS THAN 30MPH	BACK OF FOOTPATH	800	SINGLE ARM	NOT APPLICABLE	RIGID COLUMN	URBIS	AXIA 2 S1	PETITJEAN	SHEET STEEL	6	GALVANISED	DAER
46101892	LANCASTER ROAD	Scunthorpe	489357.69	408266.19	17	7016	00198781	01/04/1989 00:00	1	3	LESS THAN 30MPH	BACK OF FOOTPATH	800	SINGLE ARM	NOT APPLICABLE	RIGID COLUMN	URBIS	AXIA 2 S1	PETITJEAN	SHEET STEEL	6	GALVANISED	DAER
46101892	LANCASTER ROAD	Scunthorpe	489675.17	408331.08	2	7001	00198766	01/04/1989 00:00	1	3	LESS THAN 30MPH	BACK OF FOOTPATH	800	SINGLE ARM	NOT APPLICABLE	RIGID COLUMN	URBIS	AXIA 2 S1	PETITJEAN	SHEET STEEL	6	GALVANISED	DAER
46101892	LANCASTER ROAD	Scunthorpe	489648.68	408319.55	3	7002	00198767	01/04/1989 00:00	1	3	LESS THAN 30MPH	BACK OF FOOTPATH	800	SINGLE ARM	NOT APPLICABLE	RIGID COLUMN	URBIS	AXIA 2 S1	PETITJEAN	SHEET STEEL	6	GALVANISED	DAER
46101892	LANCASTER ROAD	Scunthorpe	489620.78	408319.02	4	7003	00198768	01/04/1989 00:00	1	3	LESS THAN 30MPH	BACK OF FOOTPATH	800	SINGLE ARM	NOT APPLICABLE	RIGID COLUMN	URBIS	AXIA 2 S1	PETITJEAN	SHEET STEEL	6	GALVANISED	DAER
46101892	LANCASTER ROAD	Scunthorpe	489593.38	408318.15	5	7004	00198769	01/04/1989 00:00	1	3	LESS THAN 30MPH	BACK OF FOOTPATH	800	SINGLE ARM	NOT APPLICABLE	RIGID COLUMN	URBIS	AXIA 2 S1	PETITJEAN	SHEET STEEL	6	GALVANISED	DAER
46101892	LANCASTER ROAD	Scunthorpe	489564.87	408328.04	6	7005	00198770	01/04/1989 00:00	1	3	LESS THAN 30MPH	BACK OF FOOTPATH	800	SINGLE ARM	NOT APPLICABLE	RIGID COLUMN	URBIS	AXIA 2 S1	PETITJEAN	SHEET STEEL	6	GALVANISED	DAER
46101892	LANCASTER ROAD	Scunthorpe	489539.56	408317.23	7	7006	00198771	01/04/2017 00:00	1	3	LESS THAN 30MPH	BACK OF FOOTPATH	0	POST TOP	NOT APPLICABLE	RIGID COLUMN	URBIS	AXIA 2 S1	VALMONT ST	TUBULAR STEEL	6	GALVANISED	TUBULAR
46101892	LANCASTER ROAD	Scunthorpe	489509.91	408327.19	8	7007	00198772	01/04/1989 00:00	1	3	LESS THAN 30MPH	BACK OF FOOTPATH	800	SINGLE ARM	NOT APPLICABLE	RIGID COLUMN	URBIS	AXIA 2 S1	PETITJEAN	SHEET STEEL	6	GALVANISED	DAER
46101892	LANCASTER ROAD	Scunthorpe	489477.97	408326.27	9	7008	00198773	01/04/1989 00:00	1	3	LESS THAN 30MPH	BACK OF FOOTPATH	800	SINGLE ARM	NOT APPLICABLE	RIGID COLUMN	URBIS	AXIA 2 S1	PETITJEAN	SHEET STEEL	6	GALVANISED	DAER
46101893	LANEHAM STREET	Scunthorpe	489337.07	411338.19	1	7000	00198783	01/04/1995 00:00	4	4	LESS THAN 30MPH	BACK OF FOOTPATH	1500	SINGLE ARM	NOT APPLICABLE	RIGID COLUMN	URBIS	AXIA 2 S1	PETITJEAN	SHEET STEEL	8	GALVANISED	THAMES
46101893	LANEHAM STREET	Scunthorpe	489355.66	411212.14	10	7009	00198792	01/04/1995 00:00	4	4	LESS THAN 30MPH	BACK OF FOOTPATH	1500	SINGLE ARM	NOT APPLICABLE	RIGID COLUMN	URBIS	AXIA 2 S1	PETITJEAN	SHEET STEEL	8	GALVANISED	THAMES
46101893	LANEHAM STREET	Scunthorpe	489360.18	411179.81	11	7010	00198793	01/04/1995 00:00	4	4	LESS THAN 30MPH	BACK OF FOOTPATH	1500	SINGLE ARM	NOT APPLICABLE	RIGID COLUMN	URBIS	AXIA 2 S1	PETITJEAN	SHEET STEEL	8	GALVANISED	THAMES
46101893	LANEHAM STREET	Scunthorpe	489354.11	411147.85	12	7011	00198794	01/04/1995 00:00	4	4	LESS THAN 30MPH	BACK OF FOOTPATH	1500	SINGLE ARM	NOT APPLICABLE	RIGID COLUMN	URBIS	AXIA 2 S1	PETITJEAN	SHEET STEEL	8	GALVANISED	THAMES
46101893	LANEHAM STREET	Scunthorpe	489370.54	411124.05	13	7012	00198795	01/04/1995 00:00	4	4	LESS THAN 30MPH	BACK OF FOOTPATH	1500	SINGLE ARM	NOT APPLICABLE	RIGID COLUMN	URBIS	AXIA 2 S1	PETITJEAN	SHEET STEEL	8	GALVANISED	THAMES
46101893	LANEHAM STREET	Scunthorpe	489372.8	411091.88	14	7013	00198796	01/04/1995 00:00	4	4	LESS THAN 30MPH	BACK OF FOOTPATH	1500	SINGLE ARM	NOT APPLICABLE	RIGID COLUMN	URBIS	AXIA 2 S1	PETITJEAN	SHEET STEEL	8	GALVANISED	THAMES
46101893	LANEHAM STREET	Scunthorpe	489401.7	411080.55	15	7014	00198797	01/04/1995 00:00	4	4	LESS THAN 30MPH	BACK OF FOOTPATH	1500	SINGLE ARM	NOT APPLICABLE	RIGID COLUMN	URBIS	AXIA 2 S1	PETITJEAN	SHEET STEEL	8	GALVANISED	THAMES
46101893	LANEHAM STREET	Scunthorpe	489413.88	411055.9	16	7015	00198798	01/04/1995 00:00	4	4	LESS THAN 30MPH	BACK OF FOOTPATH	1500	SINGLE ARM	NOT APPLICABLE	RIGID COLUMN	URBIS	AXIA 2 S1	PETITJEAN	SHEET STEEL	8	GALVANISED	THAMES
46101893	LANEHAM STREET	Scunthorpe	489419.61	411024.07	17	7016	00198799	01/04/1995 00:00	4	4	LESS THAN 30MPH	BACK OF FOOTPATH	1500	SINGLE ARM	NOT APPLICABLE	RIGID COLUMN	URBIS	AXIA 2 S1	PETITJEAN	SHEET STEEL	8	GALVANISED	THAMES
46101893	LANEHAM STREET	Scunthorpe	489423.79	410996.65	18	7017	00198800	01/04/1995 00:00	4	4	LESS THAN 30MPH	BACK OF FOOTPATH	1500	SINGLE ARM	NOT APPLICABLE	RIGID COLUMN	URBIS	AXIA 2 S1	PETITJEAN	SHEET STEEL	8	GALVANISED	THAMES
46101893	LANEHAM STREET	Scunthorpe	489411.96	410964.39	19	7018	00198801	01/04/1995 00:00	4	4	LESS THAN 30MPH	BACK OF FOOTPATH	1500	SINGLE ARM	NOT APPLICABLE	RIGID COLUMN	URBIS	AXIA 2 S1	PETITJEAN	SHEET STEEL	8	GALVANISED	THAMES
46101893	LANEHAM STREET	Scunthorpe	489338.75	411312.48	2	7001	00198784	01/04/1993 00:00	4	4	LESS THAN 30MPH	FRONT OF FOOTPATH	0	POST TOP	BLACK	RIGID COLUMN	URBIS	ƎGE ABBEY 24 LED 5.9 K	BRITISH STEE	TUBULAR STEEL	5	PAINTED	OTHER
46101893	LANEHAM STREET	Scunthorpe	489432.83	410934.92	20	7019	00198802	01/04/1995 00:00	4	4	LESS THAN 30MPH	BACK OF FOOTPATH	1500	SINGLE ARM	NOT APPLICABLE	RIGID COLUMN	URBIS	AXIA 2 S1	PETITJEAN	SHEET STEEL	8	GALVANISED	THAMES
46101893	LANEHAM STREET	Scunthorpe	489421.17	410898.68	21	7020	00198803	01/04/1995 00:00	4	4	LESS THAN 30MPH	BACK OF FOOTPATH	1500	SINGLE ARM	NOT APPLICABLE	RIGID COLUMN	URBIS	AXIA 2 S1	PETITJEAN	SHEET STEEL	8	GALVANISED	THAMES
46101893	LANEHAM STREET	Scunthorpe	489329.92	411303.83	3	7002	00198785	01/04/1995 00:00	4	4	LESS THAN 30MPH	BACK OF FOOTPATH	1500	SINGLE ARM	NOT APPLICABLE	RIGID COLUMN	URBIS	AXIA 2 S1	PETITJEAN	SHEET STEEL	8	GALVANISED	THAMES
46101893	LANEHAM STREET	Scunthorpe	489332.47	411295.62	4	7003	00198786	01/04/1993 00:00	4	4	LESS THAN 30MPH	FRONT OF FOOTPATH	0	POST TOP	BLACK	RIGID COLUMN	URBIS	ƎGE ABBEY 24 LED 5.9 K	BRITISH STEE	TUBULAR STEEL	5	PAINTED	OTHER
46101893	LANEHAM STREET	Scunthorpe	489335.27	411279	5	7004	00198787	01/04/1993 00:00	4	4	LESS THAN 30MPH	FRONT OF FOOTPATH	0	POST TOP	BLACK	RIGID COLUMN	URBIS	ƎGE ABBEY 24 LED 5.9 K	BRITISH STEE	TUBULAR STEEL	5	PAINTED	OTHER
46101893	LANEHAM STREET	Scunthorpe	489334.42	411270.78	6	7005	00198788	01/04/1995 00:00	4	4	LESS THAN 30MPH	BACK OF FOOTPATH	1500	SINGLE ARM	NOT APPLICABLE	RIGID COLUMN	URBIS	AXIA 2 S1	PETITJEAN	SHEET STEEL	8	GALVANISED	THAMES
46101893	LANEHAM STREET	Scunthorpe	489348.01	411257.75	7	7006	00198789	01/04/1993 00:00	4	4	LESS THAN 30MPH	FRONT OF FOOTPATH	0	POST TOP	BLACK	RIGID COLUMN	URBIS	ƎGE ABBEY 24 LED 5.9 K	BRITISH STEE	TUBULAR STEEL	5	PAINTED	OTHER
46101893	LANEHAM STREET	Scunthorpe	489350	411242.74	8	7007	00198790	01/04/1993 00:00	4	4	LESS THAN 30MPH	FRONT OF FOOTPATH	0	POST TOP	BLACK	RIGID COLUMN	URBIS	ƎGE ABBEY 24 LED 5.9 K	BRITISH STEE	TUBULAR STEEL	5	PAINTED	OTHER
46101893	LANEHAM STREET	Scunthorpe	489340.65	411239.9	9FP	7008	00198791	01/04/1995 00:00	4	4	LESS THAN 30MPH	BACK OF FOOTPATH	1500	SINGLE ARM	NOT APPLICABLE	RIGID COLUMN	URBIS	AXIA 2 S1	PETITJEAN	SHEET STEEL	8	GALVANISED	THAMES
46101895	LARCH GROVE	Scawby Parish	497135.48	405071.42	1	7000	00198804	01/04/1993 00:00	2	2	LESS THAN 30MPH	BACK OF FOOTPATH	0	POST TOP	NOT APPLICABLE	RIGID COLUMN	URBIS	AXIA 2 S1	PETITJEAN	SHEET STEEL	5	GALVANISED	NIDD
46101895	LARCH GROVE	Scawby Parish	497096.99	405067.77	2	7001	00198805	01/04/1980 00:00	2	2	LESS THAN 30MPH	BACK OF FOOTPATH	0	POST TOP	NOT APPLICABLE	RIGID COLUMN	URBIS	AXIA 2 S1	PETITJEAN	TUBULAR STEEL	5	GALVANISED	STEPPED TUBULAR
46101896	LEE FAIR GARDENS	Bottesford Parish	488834.67	406807.43	1	7000	00198806	01/04/1980 00:00	3	1	LESS THAN 30MPH	BACK OF FOOTPATH	300	SINGLE ARM	NOT APPLICABLE	RIGID COLUMN	URBIS	AXIA 2 S1	PETITJEAN	SHEET STEEL	5	GALVANISED	DAER
46101896	LEE FAIR GARDENS	Bottesford Parish	488850.62	406834.04	2	7001	00198807	01/04/2009 00:00	3	1	LESS THAN 30MPH	BACK OF FOOTPATH	0	POST TOP	NOT APPLICABLE	RIGID COLUMN	URBIS	AXIA 2 S1	MALLATITE	TUBULAR STEEL	6	GALVANISED	TUBULAR
46101896	LEE FAIR GARDENS	Bottesford Parish	488885.03	406834.31	3	7002	00198808	01/04/2008 00:00	3	1	LESS THAN 30MPH	VERGE	0	POST TOP	NOT APPLICABLE	RIGID COLUMN	URBIS	PILZEO 16 LED 3.19 KLM	MALLATITE	TUBULAR STEEL	6	GALVANISED	TUBULAR
46101897	LEYS LANE	Winterton Parish	493225.35	419436.74	1	7000	00198809	01/04/1980 00:00	1	1	LESS THAN 30MPH	ON POLE	800	SINGLE ARM	NOT APPLICABLE	POLE MOUNTED	URBIS	AXIA 2 S1	WOODEN PO	WOOD	5	NOT APPLICABI	Not Applicable
46101897	LEYS LANE	Winterton Parish	493271.17	419444.74	2	7001	00198810	01/04/1980 00:00	1	1	LESS THAN 30MPH	ON POLE	800	SINGLE ARM	NOT APPLICABLE	POLE MOUNTED	URBIS	AXIA 2 S1	WOODEN PO	WOOD	5	NOT APPLICABI	Not Applicable
46101897	LEYS LANE	Winterton Parish	493316.2	419457.03	3	7002	00198811	01/04/1980 00:00	1	1	LESS THAN 30MPH	ON POLE	800	SINGLE ARM	NOT APPLICABLE	POLE MOUNTED	URBIS	AXIA 2 S1	WOODEN PO	WOOD	5	NOT APPLICABI	Not Applicable
46101897	LEYS LANE	Winterton Parish	493363.78	419469.72	4	7003	00198812	01/04/1980 00:00	1	1	LESS THAN 30MPH	ON POLE	800	SINGLE ARM	NOT APPLICABLE	POLE MOUNTED	URBIS	AXIA 2 S1	WOODEN PO	WOOD	5	NOT APPLICABI	Not Applicable
46101897	LEYS LANE	Winterton Parish	493400.72	419478.52	5	7004	00198813	01/04/1980 00:00	1	1	LESS THAN 30MPH	ON POLE	800	SINGLE ARM	NOT APPLICABLE	POLE MOUNTED	URBIS	AXIA 2 S1	WOODEN PO	WOOD	5	NOT APPLICABI	Not Applicable
46101898	LIDGETT CLOSE	Scawby Parish	496928.53	405080.22	1	7000	00198814	01/04/1980 00:00	2	2	LESS THAN 30MPH	FRONT OF FOOTPATH	0	POST TOP	MID GREY	RIGID COLUMN	URBIS	AXIA 2 S1	PETITJEAN	SHEET STEEL	5	PAINTED	NIDD
46101898	LIDGETT CLOSE	Scawby Parish	497006.67	405047.23	10	7009	00198823	01/04/1980 00:00	2	2	LESS THAN 30MPH	BACK OF FOOTPATH	0	POST TOP	MID GREY	RIGID COLUMN	URBIS	AXIA 2 S1	PETITJEAN	SHEET STEEL	5	PAINTED	NIDD
46101898	LIDGETT CLOSE	Scawby Parish	496957.33	405092.65	2	7001	00198815	01/04/1980 00:00	2	2	LESS THAN 30MPH	BACK OF FOOTPATH	0	POST TOP	MID GREY	RIGID COLUMN	URBIS	AXIA 2 S1	PETITJEAN	SHEET STEEL	5	PAINTED	NIDD
46101898	LIDGETT CLOSE	Scawby Parish	496989.46	405102.21	3	7002	00198816	02/12/2019 00:00	2	2	LESS THAN 30MPH	BACK OF FOOTPATH	0	POST TOP	NOT APPLICABLE	RIGID COLUMN	URBIS	AXIA 2 S1	MALLATITE	TUBULAR STEEL	6	GALVANISED	TUBULAR
46101898	LIDGETT CLOSE	Scawby Parish	497011.39	405081.04	4	7003	00198817	01/04/1980 00:00	2	2	LESS THAN 30MPH	BACK OF FOOTPATH	0	POST TOP	MID GREY	RIGID COLUMN	URBIS	AXIA 2 S1	PETITJEAN	SHEET STEEL	5	PAINTED	NIDD
46101898	LIDGETT CLOSE	Scawby Parish	497030.04	405050.58	5	7004	00198818	01/04/1980 00:00	2	2	LESS THAN 30MPH	BACK OF FOOTPATH	0	POST TOP	MID GREY	RIGID COLUMN	URBIS	AXIA 2 S1	PETITJEAN	SHEET STEEL	5	PAINTED	NIDD
46101898	LIDGETT CLOSE	Scawby Parish	497047.27	405022.61	6	7005	00198819	01/04/1980 00:00	2	2	LESS THAN 30MPH	BACK OF FOOTPATH	0	POST TOP	MID GREY	RIGID COLUMN	URBIS	AXIA 2 S1	PETITJEAN	SHEET STEEL	5	PAINTED	NIDD
46101898	LIDGETT CLOSE	Scawby Parish	497049.71	404988.29	7	7006	00198820	01/04/1980 00:00	2	2	LESS THAN 30MPH	VERGE	0	POST TOP	MID GREY	RIGID COLUMN	URBIS	AXIA 2 S1	PETITJEAN	SHEET STEEL	5	PAINTED	NIDD
46101898	LIDGETT CLOSE	Scawby Parish	497016.16	404986.45	8	7007	00198821	01/04/1980 00:00	2	2	LESS THAN 30MPH	VERGE	0	POST TOP	MID GREY	RIGID COLUMN	URBIS	AXIA 2 S1	PETITJEAN	SHEET STEEL	5	PAINTED	NIDD
46101898	LIDGETT CLOSE	Scawby Parish	497004.18	405025.68	9	7008	00198822	02/12/2019 00:00	2	2	LESS THAN 30MPH	BACK OF FOOTPATH	0	POST TOP	NOT APPLICABLE	RIGID COLUMN	URBIS	AXIA 2 S1	MALLATITE	TUBULAR STEEL	6	GALVANISED	TUBULAR
46101900	LIME GROVE	Scunthorpe	489965.1	409354.26	1	7000	00198824	24/09/2020 00:00	2	4	LESS THAN 30MPH	BACK OF FOOTPATH	0	POST TOP	NOT APPLICABLE	RIGID COLUMN	URBIS	AXIA 2 S1	MALLATITE	TUBULAR STEEL	6	GALVANISED	TUBULAR
46101900	LIME GROVE	Scunthorpe	489943.66	409280.9	10	7009	00198833	19/03/2020 00:00	2	4	LESS THAN 30MPH	BACK OF FOOTPATH	0	POST TOP	NOT APPLICABLE	RIGID COLUMN	URBIS	AXIA 2 S1	MALLATITE	TUBULAR STEEL	6	GALVANISED	TUBULAR
46101900	LIME GROVE	Scunthorpe	489944.35	409302.54	11	7010	00198834	19/03/2020 00:00	2	4	LESS THAN 30MPH	BACK OF FOOTPATH	0	POST TOP	NOT APPLICABLE	RIGID COLUMN	URBIS	AXIA 2 S1	MALLATITE	TUBULAR STEEL	6	GALVANISED	TUBULAR
46101900	LIME GROVE	Scunthorpe	489886.72	409282.18	12	7011	00198835	01/04/1988 00:00	2	4	NOT ON A ROAD	BACK OF FOOTPATH	0	POST TOP	NOT APPLICABLE	RIGID COLUMN	URBIS	AXIA 2 S1	PETITJEAN	SHEET STEEL	5	GALVANISED	NIDD
46101900	LIME GROVE	Scunthorpe	489936.7	409321.59	2	7001	00198825	19/03/2020 00:00	2	4	LESS THAN 30MPH	BACK OF FOOTPATH	0	POST TOP	NOT APPLICABLE	RIGID COLUMN	URBIS	AXIA 2 S1	MALLATITE	TUBULAR STEEL	6	GALVANISED	TUBULAR
46101900	LIME GROVE	Scunthorpe	489913.17	409289.24	3	7002	00198826	19/03/2020 00:00	2	4	LESS THAN 30MPH	BACK OF FOOTPATH	0	POST TOP	NOT APPLICABLE	RIGID COLUMN	URBIS	AXIA 2 S1	MALLATITE	TUBULAR STEEL	6	GALVANISED	TUBULAR
46101900	LIME GROVE	Scunthorpe	489907.83	409258.07	4	7003	00198827	19/03/2020 00:00	2	4	LESS THAN 30MPH	BACK OF FOOTPATH	0	POST TOP	NOT APPLICABLE	RIGID COLUMN	URBIS	AXIA 2 S1	MALLATITE	TUBULAR STEEL	6	GALVANISED	TUBULAR
46101900	LIME GROVE	Scunthorpe	489918.96	409242.81	5	7004	00198828	19/03/2020 00:00	2	4	LESS THAN 30MPH	BACK OF FOOTPATH	0	POST TOP	NOT APPLICABLE	RIGID COLUMN	URBIS	AXIA 2 S1	MALLATITE	TUBULAR STEEL	6	GALVANISED	TUBULAR
46101900	LIME GROVE	Scunthorpe	489938.8	409218.29	6	7005	00198829	19/03/2020 00:00	2	4	LESS THAN 30MPH	BACK OF FOOTPATH	0	POST TOP	NOT APPLICABLE	RIGID COLUMN	URBIS	AXIA 2 S1	MALLATITE	TUBULAR STEEL	6	GALVANISED	TUBULAR
46101900	LIME GROVE	Scunthorpe	489959.47	409191.9	7	7006	00198830	19/03/2020 00:00	2	4	LESS THAN 30MPH	BACK OF FOOTPATH	0	POST TOP	NOT APPLICABLE	RIGID COLUMN	URBIS	AXIA 2 S1	MALLATITE	TUBULAR STEEL	6	GALVANISED	TUBULAR
46101900	LIME GROVE	Scunthorpe	489943.02	409233.71	8	7007	00198831	19/03/2020 00:00	2	4	LESS THAN 30MPH	BACK OF FOOTPATH	0	POST TOP	NOT APPLICABLE	RIGID COLUMN	URBIS	AXIA 2 S1	MALLATITE	TUBULAR STEEL	6	GALVANISED	TUBULAR
46101900	LIME GROVE	Scunthorpe	489944.77	409257.74	9	7008	00198832	01/04/1985 00:00	2	4	LESS THAN 30MPH	BACK OF FOOTPATH	300	SINGLE ARM	NOT APPLICABLE	RIGID COLUMN	URBIS	AXIA 2 S1	PETITJEAN	SHEET STEEL	5	GALVANISED	DAER
46101901	LINCOLN GARDENS	Scunthorpe	490165.29	409104.22	1	7000	00198836	01/04/1995 00:00	2	4	LESS THAN 30MPH	BACK OF FOOTPATH	0	POST TOP	NOT APPLICABLE	RIGID COLUMN	URBIS	AXIA 2 S1	PETITJEAN	SHEET STEEL	6	GALVANISED	NIDD
46101901	LINCOLN GARDENS	Scunthorpe	489818.88	409114.95	10	7009	00198845	01/04/1995 00:00	2	4	LESS THAN 30MPH	BACK OF FOOTPATH	0	POST TOP	NOT APPLICABLE	RIGID COLUMN	URBIS	AXIA 2 S1	PETITJEAN	SHEET STEEL	6	GALVANISED	NIDD
46101901	LINCOLN GARDENS	Scunthorpe	489786.26	409102.48	11	7010	00198846	01/04/1995 00:00	2	4	LESS THAN 30MPH	BACK OF FOOTPATH	0	POST TOP	NOT APPLICABLE	RIGID COLUMN	URBIS	AXIA 2 S1	PETITJEAN	SHEET STEEL	6	GALVANISED	NIDD
46101901	LINCOLN GARDENS	Scunthorpe	489746.26	409101.45	12	7011	00198847	01/04/1995 00:00	2	4	LESS THAN 30MPH	BACK OF FOOTPATH	0	POST TOP	NOT APPLICABLE	RIGID COLUMN	URBIS	AXIA 2 S1	PETITJEAN	SHEET STEEL	6	GALVANISED	NIDD
46101901	LINCOLN GARDENS	Scunthorpe	489712.35	409112.13	13	7012	00198848	01/04/1995 00:00	2	4	LESS THAN 30MPH	BACK OF FOOTPATH	0	POST TOP	NOT APPLICABLE	RIGID COLUMN	URBIS	AXIA 2 S1	PETITJEAN	SHEET STEEL	6	GALVANISED	NIDD
46101901	LINCOLN GARDENS	Scunthorpe	489682.53	409097.79	14	7013	00198849	01/04/1995 00:00	2	4	LESS THAN 30MPH	BACK OF FOOTPATH	0	POST TOP	NOT APPLICABLE	RIGID COLUMN	URBIS	AXIA 2 S1	PETITJEAN	SHEET STEEL	6	GALVANISED	NIDD
46101901	LINCOLN GARDENS	Scunthorpe	489658.6	409104.6	15	7014	00198850	01/04/1995 00:00	2	4	LESS THAN 30MPH	BACK OF FOOTPATH	0	POST TOP	NOT APPLICABLE	RIGID COLUMN	URBIS	AXIA 2 S1	PETITJEAN	SHEET STEEL	6	GALVANISED	NIDD
46101901	LINCOLN GARDENS	Scunthorpe	489628.55	409092.94	16	7015	00198851	01/04/1995 00:00	2	4	LESS THAN 30MPH	BACK OF FOOTPATH	0	POST TOP	NOT APPLICABLE	RIGID COLUMN	URBIS	AXIA 2 S1	PETITJEAN	SHEET STEEL	6	GALVANISED	NIDD
46101901	LINCOLN GARDENS	Scunthorpe	489601.75	409081.05	17	7016	00198852	01/04/1995 00:00	2	4	LESS THAN 30MPH	BACK OF FOOTPATH	0	POST TOP	NOT APPLICABLE	RIGID COLUMN	URBIS	AXIA 2 S1	PETITJEAN	SHEET STEEL	6	GALVANISED	NIDD
46101901	LINCOLN GARDENS	Scunthorpe	489571.93	409068.32	18	7017	00198853	01/04/1995 00:00	2	4	LESS THAN 30MPH	BACK OF FOOTPATH	0	POST TOP	NOT APPLICABLE	RIGID COLUMN	URBIS	AXIA 2 S1	PETITJEAN	SHEET STEEL	6	GALVANISED	NIDD
46101901	LINCOLN GARDENS	Scunthorpe	489548.04	409057.81	19	7018	00198854	01/04/1995 00:00	2	4	LESS THAN 30MPH	BACK OF FOOTPATH	0	POST TOP	NOT APPLICABLE	RIGID COLUMN	URBIS	AXIA 2 S1	PETITJEAN	SHEET STEEL	6	GALVANISED	NIDD
46101901	LINCOLN GARDENS	Scunthorpe	489532.52	409060.5	1X	7039	00198875	01/04/1990 00:00	2	4	LESS THAN 30MPH	BACK OF FOOTPATH	1250	SINGLE ARM	NOT APPLICABLE	RIGID COLUMN	URBIS	AXIA 2 S1	PETITJEAN	SHEET STEEL	8	GALVANISED	THAMES
46101901	LINCOLN GARDENS	Scunthorpe	489875.7	409129.73	1Y	7040	00198876	01/04/1990 00:00	2	4	LESS THAN 30MPH	BACK OF FOOTPATH	1250	SINGLE ARM	NOT APPLICABLE	RIGID COLUMN	URBIS	AXIA 2 S1	PETITJEAN	SHEET STEEL	8	GALVANISED	THAMES
46101901	LINCOLN GARDENS	Scunthorpe	490132	409108	2	7001	00198837	01/04/1995 00:00	2	4	LESS THAN 30MPH	BACK OF FOOTPATH	0	POST TOP	NOT APPLICABLE	RIGID COLUMN	URBIS	AXIA 2 S1	PETITJEAN	SHEET STEEL	6	GALVANISED	NIDD
46101901	LINCOLN GARDENS	Scunthorpe	489490.78	409019.39	20	7019	00198855	01/04/1995 00:00	2	4	LESS THAN 30MPH	BACK OF FOOTPATH	0	POST TOP	NOT APPLICABLE	RIGID COLUMN	URBIS	AXIA 2 S1	PETITJEAN	SHEET STEEL	6	GALVANISED	NIDD
46101901	LINCOLN GARDENS	Scunthorpe	489458.96	409018.34	21	7020	00198856	01/04/1995 00:00	2	4	LESS THAN 30MPH	BACK OF FOOTPATH	0	POST TOP	NOT APPLICABLE	RIGID COLUMN	URBIS	AXIA 2 S1	PETITJEAN	SHEET STEEL	6	GALVANISED	NIDD
46101901	LINCOLN GARDENS	Scunthorpe	489438.65	408996.5	22	7021	00198857	01/04/1995 00:00	2	4	LESS THAN 30MPH	BACK OF FOOTPATH	0	POST TOP	NOT APPLICABLE	RIGID COLUMN	URBIS	AXIA 2 S1	PETITJEAN	SHEET STEEL	6	GALVANISED	NIDD
46101901	LINCOLN GARDENS	Scunthorpe	489399.62	408992.26	23	7022	00198858	01/04/1995 00:00	2	4	LESS THAN 30MPH	BACK OF FOOTPATH	0	POST TOP	NOT APPLICABLE	RIGID COLUMN	URBIS	AXIA 2 S1	PETITJEAN	SHEET STEEL	6	GALVANISED	NIDD
46101901	LINCOLN GARDENS	Scunthorpe	489370.86	408966.61	24	7023	00198859	01/04/1995 00:00	2	4	LESS THAN 30MPH	BACK OF FOOTPATH	0	POST TOP	NOT APPLICABLE	RIGID COLUMN	URBIS	AXIA 2 S1	PETITJEAN	SHEET STEEL	6	GALVANISED	NIDD
46101901	LINCO

46101908	LUNEBURG WAY	Scunthorpe	487508.6	412318.22	7	7006	00199002	01/04/1987 00:00	2	3	LESS THAN 30MPH	VERGE	2000	SINGLE ARM	MID GREY	RIGID COLUMN	URBIS	AXIA 2 S1	PETITJEAN	SHEET STEEL	10	PAINTED	THAMES	
46101908	LUNEBURG WAY	Scunthorpe	487464.2	412900.01	7XFP	7036	00199032	01/04/2004 00:00	2	3	LESS THAN 30MPH	SPLITTER ISLAND	1500	SINGLE ARM	NOT APPLICABLE	RIGID COLUMN	URBIS	AXIA 2 S1	PETITJEAN	SHEET STEEL	12	GALVANISED	THAMES	
46101908	LUNEBURG WAY	Scunthorpe	487494.39	412344.54	8	7007	00199003	01/07/2021 00:00	2	3	LESS THAN 30MPH	VERGE	1000	SINGLE ARM	NOT APPLICABLE	RIGID COLUMN	URBIS	AXIA 2 S1	MALLATITE	TUBULAR STEEL	10	GALVANISED	TUBULAR	
46101908	LUNEBURG WAY	Scunthorpe	487466.75	412925.51	8X	7037	00199033	01/04/2004 00:00	2	3	LESS THAN 30MPH	VERGE	1500	SINGLE ARM	MID GREY	RIGID COLUMN	URBIS	AXIA 2 S1	PETITJEAN	SHEET STEEL	12	PAINTED	THAMES	
46101908	LUNEBURG WAY	Scunthorpe	487475.01	412350.37	9	7008	00199004	01/07/2021 00:00	2	3	LESS THAN 30MPH	BACK OF FOOTPATH	1000	SINGLE ARM	NOT APPLICABLE	RIGID COLUMN	URBIS	AXIA 2 S1	MALLATITE	TUBULAR STEEL	10	GALVANISED	TUBULAR	
46101909	LUNEDALE ROAD	Scunthorpe	490971.66	408336.88	1	7000	00199034	01/04/2008 00:00	1	3	LESS THAN 30MPH	BACK OF FOOTPATH	0	POST TOP	NOT APPLICABLE	RIGID COLUMN	URBIS	AXIA 2 S1	MALLATITE	TUBULAR STEEL	6	GALVANISED	TUBULAR	
46101909	LUNEDALE ROAD	Scunthorpe	490865.44	408143.76	10	7009	00199043	11/02/2020 00:00	1	3	LESS THAN 30MPH	BACK OF FOOTPATH	0	POST TOP	NOT APPLICABLE	RIGID COLUMN	URBIS	AXIA 2 S1	MALLATITE	TUBULAR STEEL	6	GALVANISED	TUBULAR	
46101909	LUNEDALE ROAD	Scunthorpe	490851.16	408165.93	11	7010	00199044	11/02/2020 00:00	1	3	LESS THAN 30MPH	BACK OF FOOTPATH	0	POST TOP	NOT APPLICABLE	RIGID COLUMN	URBIS	AXIA 2 S1	MALLATITE	TUBULAR STEEL	6	GALVANISED	TUBULAR	
46101909	LUNEDALE ROAD	Scunthorpe	490857.08	408199.76	12	7011	00199045	01/04/1980 00:00	1	3	LESS THAN 30MPH	BACK OF FOOTPATH	300	SINGLE ARM	NOT APPLICABLE	RIGID COLUMN	URBIS	AXIA 2 S1	PETITJEAN	SHEET STEEL	5	GALVANISED	DAER	
46101909	LUNEDALE ROAD	Scunthorpe	490983.69	408307.95	2	7001	00199035	01/04/2008 00:00	1	3	LESS THAN 30MPH	BACK OF FOOTPATH	0	POST TOP	NOT APPLICABLE	RIGID COLUMN	URBIS	AXIA 2 S1	MALLATITE	TUBULAR STEEL	6	GALVANISED	TUBULAR	
46101909	LUNEDALE ROAD	Scunthorpe	490981.02	408277.94	3	7002	00199036	11/02/2020 00:00	1	3	LESS THAN 30MPH	BACK OF FOOTPATH	0	POST TOP	NOT APPLICABLE	RIGID COLUMN	URBIS	AXIA 2 S1	MALLATITE	TUBULAR STEEL	6	GALVANISED	TUBULAR	
46101909	LUNEDALE ROAD	Scunthorpe	490991.95	408240.38	4	7003	00199037	01/04/1985 00:00	1	3	LESS THAN 30MPH	BACK OF FOOTPATH	800	SINGLE ARM	NOT APPLICABLE	RIGID COLUMN	URBIS	AXIA 2 S1	PETITJEAN	SHEET STEEL	5	GALVANISED	DAER	
46101909	LUNEDALE ROAD	Scunthorpe	490986.69	408211.82	5	7004	00199038	11/02/2020 00:00	1	3	LESS THAN 30MPH	BACK OF FOOTPATH	0	POST TOP	NOT APPLICABLE	RIGID COLUMN	URBIS	AXIA 2 S1	MALLATITE	TUBULAR STEEL	6	GALVANISED	TUBULAR	
46101909	LUNEDALE ROAD	Scunthorpe	490995.96	408179.75	6	7005	00199039	01/04/2016 00:00	1	3	LESS THAN 30MPH	BACK OF FOOTPATH	0	POST TOP	NOT APPLICABLE	RIGID COLUMN	URBIS	AXIA 2 S1	MALLATITE	TUBULAR STEEL	6	GALVANISED	TUBULAR	
46101909	LUNEDALE ROAD	Scunthorpe	490979.43	408148.56	7	7006	00199040	01/04/2016 00:00	1	3	LESS THAN 30MPH	FRONT OF FOOTPATH	0	POST TOP	NOT APPLICABLE	RIGID COLUMN	URBIS	AXIA 2 S1	MALLATITE	TUBULAR STEEL	6	GALVANISED	TUBULAR	
46101909	LUNEDALE ROAD	Scunthorpe	490951.62	408151.94	8	7007	00199041	11/02/2020 00:00	1	3	LESS THAN 30MPH	BACK OF FOOTPATH	0	POST TOP	NOT APPLICABLE	RIGID COLUMN	URBIS	AXIA 2 S1	MALLATITE	TUBULAR STEEL	6	GALVANISED	TUBULAR	
46101909	LUNEDALE ROAD	Scunthorpe	490896.63	408142	9	7008	00199042	11/02/2020 00:00	1	3	LESS THAN 30MPH	BACK OF FOOTPATH	0	POST TOP	NOT APPLICABLE	RIGID COLUMN	URBIS	AXIA 2 S1	MALLATITE	TUBULAR STEEL	6	GALVANISED	TUBULAR	
46101910	LYGON STREET	Scunthorpe	489813.36	410466.05	1	7000	00199046	01/04/2001 00:00	2	4	LESS THAN 30MPH	BACK OF FOOTPATH	300	SINGLE ARM	NOT APPLICABLE	RIGID COLUMN	URBIS	AXIA 2 S1	MALLATITE	TUBULAR STEEL	6	GALVANISED	STEPPED TUBULAR	
46101910	LYGON STREET	Scunthorpe	489914.31	410460.75	10	7009	00199055	01/04/2001 00:00	2	4	LESS THAN 30MPH	BACK OF FOOTPATH	300	SINGLE ARM	NOT APPLICABLE	RIGID COLUMN	URBIS	AXIA 2 S1	MALLATITE	TUBULAR STEEL	6	GALVANISED	STEPPED TUBULAR	
46101910	LYGON STREET	Scunthorpe	489897.21	410472.78	11	7010	00199056	01/04/2001 00:00	2	4	LESS THAN 30MPH	BACK OF FOOTPATH	300	SINGLE ARM	NOT APPLICABLE	RIGID COLUMN	URBIS	AXIA 2 S1	MALLATITE	TUBULAR STEEL	6	GALVANISED	STEPPED TUBULAR	
46101910	LYGON STREET	Scunthorpe	489926.01	410480.41	12	7011	00199057	18/12/2024 00:00	2	4	LESS THAN 30MPH	VERGE	300	SINGLE ARM	NOT APPLICABLE	RIGID COLUMN	URBIS	AXIA 2 S1	MALLATITE	TUBULAR STEEL	6	GALVANISED	STEPPED TUBULAR	
46101910	LYGON STREET	Scunthorpe	489938.79	410471.58	13FP	7012	00199058	01/04/2001 00:00	2	4	LESS THAN 30MPH	BACK OF FOOTPATH	300	SINGLE ARM	NOT APPLICABLE	RIGID COLUMN	URBIS	AXIA 2 S1	MALLATITE	TUBULAR STEEL	6	GALVANISED	STEPPED TUBULAR	
46101910	LYGON STREET	Scunthorpe	489940.98	410447.29	14	7013	00199059	01/04/2001 00:00	2	4	LESS THAN 30MPH	BACK OF FOOTPATH	300	SINGLE ARM	NOT APPLICABLE	RIGID COLUMN	URBIS	AXIA 2 S1	MALLATITE	TUBULAR STEEL	6	GALVANISED	STEPPED TUBULAR	
46101910	LYGON STREET	Scunthorpe	489838.73	410455.99	2	7001	00199047	01/04/2001 00:00	2	4	LESS THAN 30MPH	BACK OF FOOTPATH	300	SINGLE ARM	NOT APPLICABLE	RIGID COLUMN	URBIS	AXIA 2 S1	MALLATITE	TUBULAR STEEL	6	GALVANISED	STEPPED TUBULAR	
46101910	LYGON STREET	Scunthorpe	489852.34	410498.06	3	7002	00199048	01/04/2001 00:00	2	4	LESS THAN 30MPH	BACK OF FOOTPATH	300	SINGLE ARM	NOT APPLICABLE	RIGID COLUMN	URBIS	AXIA 2 S1	MALLATITE	TUBULAR STEEL	6	GALVANISED	STEPPED TUBULAR	
46101910	LYGON STREET	Scunthorpe	489861.56	410474.12	4	7003	00199049	01/04/2001 00:00	2	4	LESS THAN 30MPH	BACK OF FOOTPATH	300	SINGLE ARM	NOT APPLICABLE	RIGID COLUMN	URBIS	AXIA 2 S1	MALLATITE	TUBULAR STEEL	6	GALVANISED	STEPPED TUBULAR	
46101910	LYGON STREET	Scunthorpe	489870.01	410470.73	5	7004	00199050	01/04/2001 00:00	2	4	NOT ON A ROAD	BACK OF FOOTPATH	300	SINGLE ARM	NOT APPLICABLE	RIGID COLUMN	URBIS	AXIA 2 S1	MALLATITE	TUBULAR STEEL	6	GALVANISED	STEPPED TUBULAR	
46101910	LYGON STREET	Scunthorpe	489862.73	410447.58	6	7005	00199051	01/04/2001 00:00	2	4	LESS THAN 30MPH	BACK OF FOOTPATH	300	SINGLE ARM	NOT APPLICABLE	RIGID COLUMN	URBIS	AXIA 2 S1	MALLATITE	TUBULAR STEEL	6	GALVANISED	STEPPED TUBULAR	
46101910	LYGON STREET	Scunthorpe	489864.86	410423.14	7	7006	00199052	01/04/2001 00:00	2	4	LESS THAN 30MPH	BACK OF FOOTPATH	300	SINGLE ARM	NOT APPLICABLE	RIGID COLUMN	URBIS	AXIA 2 S1	MALLATITE	TUBULAR STEEL	6	GALVANISED	STEPPED TUBULAR	
46101910	LYGON STREET	Scunthorpe	489894.57	410425.61	8	7007	00199053	01/04/2001 00:00	2	4	LESS THAN 30MPH	BACK OF FOOTPATH	300	SINGLE ARM	NOT APPLICABLE	RIGID COLUMN	URBIS	AXIA 2 S1	MALLATITE	TUBULAR STEEL	6	GALVANISED	STEPPED TUBULAR	
46101910	LYGON STREET	Scunthorpe	489916.44	410437.09	9	7008	00199054	01/04/2001 00:00	2	4	LESS THAN 30MPH	BACK OF FOOTPATH	300	SINGLE ARM	NOT APPLICABLE	RIGID COLUMN	URBIS	AXIA 2 S1	MALLATITE	TUBULAR STEEL	6	GALVANISED	STEPPED TUBULAR	
46101911	MACKENDER COURT	Scunthorpe	489998.18	408640.15	1	7000	00199060	01/04/1987 00:00	1	3	LESS THAN 30MPH	BACK OF FOOTPATH	0	POST TOP	NOT APPLICABLE	RIGID COLUMN	URBIS	AXIA 2 S1	PETITJEAN	SHEET STEEL	5	GALVANISED	NIDD	
46101911	MACKENDER COURT	Scunthorpe	489999.13	408619.75	2	7001	00199061	01/04/1987 00:00	1	3	LESS THAN 30MPH	BACK OF FOOTPATH	0	POST TOP	NOT APPLICABLE	RIGID COLUMN	URBIS	AXIA 2 S1	PETITJEAN	SHEET STEEL	5	GALVANISED	NIDD	
46101911	MACKENDER COURT	Scunthorpe	489985.65	408602.43	3	7002	00199062	01/04/1987 00:00	1	3	LESS THAN 30MPH	VERGE	0	POST TOP	NOT APPLICABLE	RIGID COLUMN	URBIS	AXIA 2 S1	PETITJEAN	SHEET STEEL	5	GALVANISED	NIDD	
46101911	MACKENDER COURT	Scunthorpe	489998.16	408601.47	4	7003	00199063	01/04/1987 00:00	1	3	LESS THAN 30MPH	VERGE	0	POST TOP	NOT APPLICABLE	RIGID COLUMN	URBIS	AXIA 2 S1	PETITJEAN	SHEET STEEL	5	GALVANISED	NIDD	
46101911	MACKENDER COURT	Scunthorpe	490014.83	408603.04	5	7004	00199064	01/04/1987 00:00	1	3	LESS THAN 30MPH	VERGE	0	POST TOP	NOT APPLICABLE	RIGID COLUMN	URBIS	AXIA 2 S1	PETITJEAN	SHEET STEEL	5	GALVANISED	NIDD	
46101911	MACKENDER COURT	Scunthorpe	490028.31	408596.62	6	7005	00199065	01/04/1987 00:00	1	3	LESS THAN 30MPH	VERGE	0	POST TOP	NOT APPLICABLE	RIGID COLUMN	URBIS	AXIA 2 S1	PETITJEAN	SHEET STEEL	5	GALVANISED	NIDD	
46101912	MAGNOLIA WAY	Scunthorpe	489505.3	409268.59	1	7000	00199066	01/04/2001 00:00	2	4	LESS THAN 30MPH	BACK OF FOOTPATH	300	SINGLE ARM	NOT APPLICABLE	RIGID COLUMN	URBIS	AXIA 2 S1	MALLATITE	TUBULAR STEEL	6	GALVANISED	STEPPED TUBULAR	
46101912	MAGNOLIA WAY	Scunthorpe	489526.92	409267	2	7001	00199067	14/05/2020 00:00	2	4	LESS THAN 30MPH	BACK OF FOOTPATH	0	POST TOP	NOT APPLICABLE	RIGID COLUMN	URBIS	AXIA 2 S1	MALLATITE	TUBULAR STEEL	6	GALVANISED	TUBULAR	
46101912	MAGNOLIA WAY	Scunthorpe	489549.71	409256.67	3	7002	00199068	14/05/2020 00:00	2	4	LESS THAN 30MPH	BACK OF FOOTPATH	0	POST TOP	NOT APPLICABLE	RIGID COLUMN	URBIS	AXIA 2 S1	MALLATITE	TUBULAR STEEL	6	GALVANISED	TUBULAR	
46101914	MAIN STREET	Scawby Parish	497011.18	404587.36	1	7000	00199069	01/04/1980 00:00	2	2	LESS THAN 30MPH	ON POLE	300	SINGLE ARM	NOT APPLICABLE	POLE MOUNTED	URBIS	AXIA 2 S1	WOODEN PO	WOOD	5	NOT APPLICABI	Not Applicable	
46101914	MAIN STREET	Scawby Parish	496971.58	404587.68	2	7001	00199070	01/04/1980 00:00	2	2	LESS THAN 30MPH	ON POLE	300	SINGLE ARM	NOT APPLICABLE	POLE MOUNTED	URBIS	AXIA 2 S1	WOODEN PO	WOOD	5	NOT APPLICABI	Not Applicable	
46101914	MAIN STREET	Scawby Parish	496926.04	404589.47	3	7002	00199071	01/04/1980 00:00	2	2	LESS THAN 30MPH	ON POLE	300	SINGLE ARM	NOT APPLICABLE	POLE MOUNTED	URBIS	AXIA 2 S1	WOODEN PO	WOOD	5	NOT APPLICABI	Not Applicable	
46101914	MAIN STREET	Scawby Parish	496881.74	404595.06	4	7003	00199072	01/04/1980 00:00	2	2	LESS THAN 30MPH	ON POLE	300	SINGLE ARM	NOT APPLICABLE	POLE MOUNTED	URBIS	AXIA 2 S1	WOODEN PO	WOOD	5	NOT APPLICABI	Not Applicable	
46101914	MAIN STREET	Scawby Parish	496836.82	404611.49	5	7004	00199073	01/04/1980 00:00	2	2	LESS THAN 30MPH	ON POLE	300	SINGLE ARM	NOT APPLICABLE	POLE MOUNTED	URBIS	AXIA 2 S1	WOODEN PO	WOOD	5	NOT APPLICABI	Not Applicable	
46101915	MALKINSON CLOSE	Winterton Parish	492483.29	418215.82	1	7000	00199074	06/03/2019 00:00	1	1	LESS THAN 30MPH	BACK OF FOOTPATH	0	POST TOP	NOT APPLICABLE	RIGID COLUMN	URBIS	AXIA 2 S1	MALLATITE	TUBULAR STEEL	6	GALVANISED	TUBULAR	
46101915	MALKINSON CLOSE	Winterton Parish	492445.76	418222.53	2	7001	00199075	06/03/2019 00:00	1	1	LESS THAN 30MPH	BACK OF FOOTPATH	0	POST TOP	NOT APPLICABLE	RIGID COLUMN	URBIS	AXIA 2 S1	MALLATITE	TUBULAR STEEL	6	GALVANISED	TUBULAR	
46101915	MALKINSON CLOSE	Winterton Parish	492420.49	418214.19	3	7002	00199076	06/03/2019 00:00	1	1	LESS THAN 30MPH	BACK OF FOOTPATH	0	POST TOP	NOT APPLICABLE	RIGID COLUMN	URBIS	PILZEO 16 LED 3.19 KLM	MALLATITE	TUBULAR STEEL	6	GALVANISED	TUBULAR	
46101916	MANBY ROAD	South Killingholme Parish	517061.66	416588.14	1	7000	00199077	01/04/1998 00:00	3	1	GREATER THAN 50MPH	BACK OF FOOTPATH	1250	SINGLE ARM	NOT APPLICABLE	RIGID COLUMN	URBIS	AXIA 2 S1	PETITJEAN	SHEET STEEL	10	GALVANISED	THAMES	
46101916	MANBY ROAD	South Killingholme Parish	517274.24	416458.52	10	7009	00199086	01/04/1998 00:00	3	1	GREATER THAN 50MPH	CENTRAL RESERVATION	500	DOUBLE ARM	NOT APPLICABLE	RIGID COLUMN	URBIS	AXIA 2 S1	PETITJEAN	SHEET STEEL	10	GALVANISED	THAMES	
46101916	MANBY ROAD	South Killingholme Parish	517319.71	416428.49	11	7010	00199087	01/04/1998 00:00	3	1	GREATER THAN 50MPH	CENTRAL RESERVATION	500	DOUBLE ARM	NOT APPLICABLE	RIGID COLUMN	URBIS	AXIA 2 S1	PETITJEAN	SHEET STEEL	10	GALVANISED	THAMES	
46101916	MANBY ROAD	South Killingholme Parish	517360.66	416399.31	12	7011	00199088	01/04/1998 00:00	3	1	GREATER THAN 50MPH	CENTRAL RESERVATION	500	DOUBLE ARM	NOT APPLICABLE	RIGID COLUMN	URBIS	AXIA 2 S1	PETITJEAN	SHEET STEEL	10	GALVANISED	THAMES	
46101916	MANBY ROAD	South Killingholme Parish	517398.69	416373.14	13	7012	00199089	01/04/1998 00:00	3	1	GREATER THAN 50MPH	CENTRAL RESERVATION	500	DOUBLE ARM	NOT APPLICABLE	RIGID COLUMN	URBIS	AXIA 2 S1	PETITJEAN	SHEET STEEL	10	GALVANISED	THAMES	
46101916	MANBY ROAD	South Killingholme Parish	517440.11	416345.33	14	7013	00199090	01/04/1998 00:00	3	1	GREATER THAN 50MPH	CENTRAL RESERVATION	500	DOUBLE ARM	NOT APPLICABLE	RIGID COLUMN	URBIS	AXIA 2 S1	PETITJEAN	SHEET STEEL	10	GALVANISED	THAMES	
46101916	MANBY ROAD	South Killingholme Parish	517481.67	416316.42	15	7014	00199091	01/04/1998 00:00	3	1	GREATER THAN 50MPH	CENTRAL RESERVATION	500	DOUBLE ARM	NOT APPLICABLE	RIGID COLUMN	URBIS	AXIA 2 S1	PETITJEAN	SHEET STEEL	10	GALVANISED	THAMES	
46101916	MANBY ROAD	South Killingholme Parish	517521.39	416290.22	16	7015	00199092	01/04/1998 00:00	3	1	GREATER THAN 50MPH	CENTRAL RESERVATION	500	DOUBLE ARM	NOT APPLICABLE	RIGID COLUMN	URBIS	AXIA 2 S1	PETITJEAN	SHEET STEEL	10	GALVANISED	THAMES	
46101916	MANBY ROAD	South Killingholme Parish	517564.08	416259.8	17	7016	00199093	01/04/1998 00:00	3	1	GREATER THAN 50MPH	CENTRAL RESERVATION	500	DOUBLE ARM	NOT APPLICABLE	RIGID COLUMN	URBIS	AXIA 2 S1	PETITJEAN	SHEET STEEL	10	GALVANISED	THAMES	
46101916	MANBY ROAD	South Killingholme Parish	517599.56	416232.92	18	7017	00199094	01/04/1998 00:00	3	1	GREATER THAN 50MPH	CENTRAL RESERVATION	500	DOUBLE ARM	NOT APPLICABLE	RIGID COLUMN	URBIS	AXIA 2 S1	PETITJEAN	SHEET STEEL	10	GALVANISED	THAMES	
46101916	MANBY ROAD	South Killingholme Parish	517643.19	416205.01	19	7018	00199095	01/04/1998 00:00	3	1	GREATER THAN 50MPH	CENTRAL RESERVATION	500	DOUBLE ARM	NOT APPLICABLE	RIGID COLUMN	URBIS	AXIA 2 S1	PETITJEAN	SHEET STEEL	10	GALVANISED	THAMES	
46101916	MANBY ROAD	South Killingholme Parish	517047.15	416550.5	2	7001	00199078	01/04/1998 00:00	3	1	GREATER THAN 50MPH	VERGE	1250	SINGLE ARM	NOT APPLICABLE	RIGID COLUMN	URBIS	AXIA 2 S1	PETITJEAN	SHEET STEEL	10	GALVANISED	THAMES	
46101916	MANBY ROAD	South Killingholme Parish	517082.09	416565.02	3	7002	00199079	01/04/1998 00:00	3	1	GREATER THAN 50MPH	VERGE	1250	SINGLE ARM	NOT APPLICABLE	RIGID COLUMN	URBIS	AXIA 2 S1	PETITJEAN	SHEET STEEL	10	GALVANISED	THAMES	
46101916	MANBY ROAD	South Killingholme Parish	517083.17	416540.83	4	7003	00199080	01/04/1998 00:00	3	1	GREATER THAN 50MPH	VERGE	1250	SINGLE ARM	NOT APPLICABLE	RIGID COLUMN	URBIS	AXIA 2 S1	PETITJEAN	SHEET STEEL	10	GALVANISED	THAMES	
46101916	MANBY ROAD	South Killingholme Parish	517110.38	416559.25	5	7004	00199081	01/04/1998 00:00	3	1	GREATER THAN 50MPH	VERGE	1250	SINGLE ARM	NOT APPLICABLE	RIGID COLUMN	URBIS	AXIA 2 S1	PETITJEAN	SHEET STEEL	10	GALVANISED	THAMES	
46101916	MANBY ROAD	South Killingholme Parish	517110.38	416529.14	6	7005	00199082	01/04/1998 00:00	3	1	GREATER THAN 50MPH	VERGE	1250	SINGLE ARM	NOT APPLICABLE	RIGID COLUMN	URBIS	AXIA 2 S1	PETITJEAN	SHEET STEEL	10	GALVANISED	THAMES	
46101916	MANBY ROAD	South Killingholme Parish	517148.89	416529.07	7	7006	00199083	01/04/1998 00:00	3	1	GREATER THAN 50MPH	CENTRAL RESERVATION	500	DOUBLE ARM	NOT APPLICABLE	RIGID COLUMN	URBIS	AXIA 2 S1	PETITJEAN	SHEET STEEL	10	GALVANISED	THAMES	
46101916	MANBY ROAD	South Killingholme Parish	517191.49	416507.93	8	7007	00199084	01/04/1998 00:00	3	1	GREATER THAN 50MPH	CENTRAL RESERVATION	500	DOUBLE ARM	NOT APPLICABLE	RIGID COLUMN	URBIS	AXIA 2 S1	PETITJEAN	SHEET STEEL	10	GALVANISED	THAMES	
46101916	MANBY ROAD	South Killingholme Parish	517233.96	416483.44	9	7008	00199085	01/04/1998 00:00	3	1	GREATER THAN 50MPH	CENTRAL RESERVATION	500	DOUBLE ARM	NOT APPLICABLE	RIGID COLUMN	URBIS	AXIA 2 S1	PETITJEAN	SHEET STEEL	10	GALVANISED	THAMES	
46101917	MANLEY GARDENS	Brigg Parish	499790.33	407112.99	1	7000	00199096	01/04/1980 00:00	2	3	LESS THAN 30MPH	BACK OF FOOTPATH	0	POST TOP	LIGHT GREY	RIGID COLUMN	URBIS	AXIA 2 S1	PETITJEAN	SHEET STEEL	5	PAINTED	NIDD	
46101917	MANLEY GARDENS	Brigg Parish	499812.89	407082.75	2	7001	00199097	24/06/2020 00:00	2	3	LESS THAN 30MPH	BACK OF FOOTPATH	0	POST TOP	NOT APPLICABLE	RIGID COLUMN	URBIS	AXIA 2 S1	MALLATITE	TUBULAR STEEL	6	GALVANISED	TUBULAR	
46101917	MANLEY GARDENS	Brigg Parish	499839.88	407094.65	3	7002	00199098	01/04/1980 00:00	2	3	LESS THAN 30MPH	BACK OF FOOTPATH	300	SINGLE ARM	LIGHT GREY	RIGID COLUMN	URBIS	AXIA 2 S1	PETITJEAN	SHEET STEEL	5	PAINTED	DAER	
46101917	MANLEY GARDENS	Brigg Parish	499861.64	407071.36	4	7003	00199099	01/04/1980 00:00	2	3	LESS THAN 30MPH	BACK OF FOOTPATH	0	POST TOP	LIGHT GREY	RIGID COLUMN	URBIS	AXIA 2 S1	PETITJEAN	SHEET STEEL	5	PAINTED	NIDD	
46101917	MANLEY GARDENS	Brigg Parish	499867.43	407043.57	5	7004	00199100	04/11/2019 00:00	2	3	LESS THAN 30MPH	BACK OF FOOTPATH	0	POST TOP	NOT APPLICABLE	RIGID COLUMN	URBIS	AXIA 2 S1	MALLATITE	TUBULAR STEEL	6	GALVANISED	TUBULAR	
46101917	MANLEY GARDENS	Brigg Parish	499897.2	407006.31	6	7005	00199101	01/04/1980 00:00	2	3	LESS THAN 30MPH	BACK OF FOOTPATH	300	SINGLE ARM	LIGHT GREY	RIGID COLUMN	URBIS	AXIA 2 S1	PETITJEAN	SHEET STEEL	5	PAINTED	DAER	
46101917	MANLEY GARDENS	Brigg Parish	499917.94	406971.22	7	7006	00199102	04/11/2019 00:00	2	3	LESS THAN 30MPH	BACK OF FOOTPATH	0	POST TOP	NOT APPLICABLE	RIGID COLUMN	URBIS	AXIA 2 S1	MALLATITE	TUBULAR STEEL	6	GALVANISED	TUBULAR	
46101917	MANLEY GARDENS	Brigg Parish	499939.98	406932.65	8	7007	00199103	04/11/2019 00:00	2	3	LESS THAN 30MPH	BACK OF FOOTPATH	0	POST TOP	NOT APPLICABLE	RIGID COLUMN	URBIS	AXIA 2 S1	MALLATITE	TUBULAR STEEL	6	GALVANISED	TUBULAR	
46101917	MANLEY GARDENS	Brigg Parish	499956.8	406900.83	9	7008	00199104	04/11/2019 00:00	2	3	LESS THAN 30MPH	BACK OF FOOTPATH	0	POST TOP	NOT APPLICABLE	RIGID COLUMN	URBIS	AXIA 2 S1	MALLATITE	TUBULAR STEEL	6	GALVANISED	TUBULAR	
46101918	MARTINS CLOSE	Barrow upon Humber Parish	507374.62	421740.51	1	7000	00199105	01/04/1978 00:00	4	1	LESS THAN 30MPH	BACK OF FOOTPATH	0	POST TOP	NOT APPLICABLE	RIGID COLUMN	URBIS	AXIA 2 S1	PETITJEAN	SHEET STEEL	5	GALVANISED	NIDD	
46101918	MARTINS CLOSE	Barrow upon Humber Parish	507459.33	421710.43	10	7009	00199114	01/04/1978 00:00	4	1	LESS THAN 30MPH	BACK OF FOOTPATH	0	POST TOP	NOT APPLICABLE	RIGID COLUMN	URBIS	AXIA 2 S1	PETITJEAN	SHEET STEEL	5	GALVANISED	NIDD	
46101918	MARTINS CLOSE	Barrow upon Humber Parish	507387.35	421776.05	3	7002	00199107	01/04/1978 00:00	4	1	LESS THAN 30MPH	BACK OF FOOTPATH	0	POST TOP	NOT APPLICABLE	RIGID COLUMN	URBIS	AXIA 2 S1	PETITJEAN	SHEET STEEL	5	GALVANISED	NIDD	
46101918	MARTINS CLOSE	Barrow upon Humber Parish	507409.44	421765.72	4	7003	00199108	01/04/2008 00:00	4	1	NOT ON A ROAD	BACK OF FOOTPATH	0	POST TOP	NOT APPLICABLE	MID HINGED	URBIS	AXIA 2 S1	PETITJEAN	SHEET STEEL	5	GALVANISED	LEVEN	
46101918	MARTINS CLOSE	Barrow upon Humber Parish	507398.69	421722.46	5	7004	00199109	01/04/1978 00:00	4	1	LESS THAN 30MPH	BACK OF FOOTPATH	0	POST TOP	NOT APPLICABLE	RIGID COLUMN	URBIS	AXIA 2 S1	PETITJEAN	SHEET STEEL	5	GALVANISED	NIDD	
46101918	MARTINS CLOSE	Barrow upon Humber Parish	507421.08	421753.29	6	7005	00199110	01/04/1978 00:00	4	1	LESS THAN 30MPH	BACK OF FOOTPATH	0	POST TOP	NOT APPLICABLE	RIGID COLUMN	URBIS	AXIA 2 S1	PETITJEAN	SHEET STEEL	5	GALVANISED	NIDD	
46101918	MARTINS CLOSE	Barrow upon Humber Parish	507435.79	421718.43	8	7007	00199112	01/04/1978 00:00	4	1	LESS THAN 30MPH	BACK OF FOOTPATH	0	POST TOP	NOT APPLICABLE	RIGID COLUMN	URBIS	AXIA 2 S1	PETITJEAN	SHEET STEEL	5	GALVANISED	NIDD	
46101918	MARTINS CLOSE	Barrow upon Humber Parish	507441.14	421745.86	9	7008	00199113	01/04/1978 00:00	4	1	LESS THAN 30MPH	BACK OF FOOTPATH	0	POST TOP	NOT APPLICABLE	RIGID COLUMN	URBIS	AXIA 2 S1	PETITJEAN	SHEET STEEL	5	GALVANISED	NIDD	
46101919	MARKET PLACE	Barton upon Humber Parish	503156.53	421848.37	1	7000	00199117	01/04/2008 00:00	5	2	LESS THAN 30MPH	BACK OF FOOTPATH	1000	SINGLE ARM	BLACK	RIGID COLUMN	METCRAFT	GLADSTONE	FABRIKAT	TUBULAR STEEL	10	PAINTED	TUBULAR	
46101919	MARKET PLACE	Barton upon Humber Parish	503171.47	421853.94	1	7005	00199122	01/04/2013 00:00	5	2	LESS THAN 30MPH	FRONT OF FOOTPATH	0	POST TOP	BLACKWHITE	RIGID COLUMN	PHILIPS	INI LUMA 40 LED 5.8

46101931	MILL ROAD	Crowle Parish	477511.03	413128.72	5	7004	00199278	01/04/1988 00:00	5	1	LESS THAN 30MPH	BACK OF FOOTPATH	300	SINGLE ARM	NOT APPLICABLE	RIGID COLUMN	URBIS	AXIA 2 S1	PETITJEAN	SHEET STEEL	5	GALVANISED	DAER
46101931	MILL ROAD	Crowle Parish	477538.2	413134.52	6	7005	00199279	01/04/1988 00:00	5	1	LESS THAN 30MPH	BACK OF FOOTPATH	300	SINGLE ARM	NOT APPLICABLE	RIGID COLUMN	URBIS	AXIA 2 S1	PETITJEAN	SHEET STEEL	5	GALVANISED	DAER
46101931	MILL ROAD	Crowle Parish	477580.79	413130.21	7	7006	00199280	01/04/1988 00:00	5	1	LESS THAN 30MPH	BACK OF FOOTPATH	300	SINGLE ARM	NOT APPLICABLE	RIGID COLUMN	URBIS	AXIA 2 S1	PETITJEAN	SHEET STEEL	5	GALVANISED	DAER
46101931	MILL ROAD	Crowle Parish	477629.86	413117.35	8	7007	00199281	01/04/1988 00:00	5	1	LESS THAN 30MPH	BACK OF FOOTPATH	300	SINGLE ARM	NOT APPLICABLE	RIGID COLUMN	URBIS	AXIA 2 S1	PETITJEAN	SHEET STEEL	5	GALVANISED	DAER
46101931	MILL ROAD	Crowle Parish	477657.22	413116.59	9	7008	00199282	01/04/1992 00:00	5	1	LESS THAN 30MPH	BACK OF FOOTPATH	300	SINGLE ARM	NOT APPLICABLE	RIGID COLUMN	URBIS	AXIA 2 S1	PETITJEAN	SHEET STEEL	5	GALVANISED	DAER
46101932	MILLBROOK WAY	Barton upon Humber Parish	503794.56	421160.28	1	7000	00199294	01/04/1980 00:00	5	2	LESS THAN 30MPH	BACK OF FOOTPATH	0	POST TOP	MID GREY	RIGID COLUMN	URBIS	AXIA 2 S1	PETITJEAN	SHEET STEEL	5	PAINTED	NIDD
46101932	MILLBROOK WAY	Barton upon Humber Parish	503765.9	421141.84	2	7001	00199295	01/04/1980 00:00	5	2	LESS THAN 30MPH	VERGE	0	POST TOP	MID GREY	RIGID COLUMN	URBIS	AXIA 2 S1	PETITJEAN	SHEET STEEL	5	PAINTED	NIDD
46101932	MILLBROOK WAY	Barton upon Humber Parish	503747.19	421138.71	3	7002	00199296	01/04/1980 00:00	5	2	LESS THAN 30MPH	VERGE	0	POST TOP	NOT APPLICABLE	RIGID COLUMN	URBIS	AXIA 2 S1	PETITJEAN	SHEET STEEL	5	GALVANISED	NIDD
46101933	MILLFIELDS	Barton upon Humber Parish	502585.54	421399.67	1	7000	00199297	01/04/1994 00:00	5	2	LESS THAN 30MPH	VERGE	800	SINGLE ARM	NOT APPLICABLE	RIGID COLUMN	URBIS	AXIA 2 S1	PETITJEAN	SHEET STEEL	6	GALVANISED	DAER
46101933	MILLFIELDS	Barton upon Humber Parish	502775.89	421447.1	10	7009	00199306	01/04/1994 00:00	5	2	LESS THAN 30MPH	BACK OF FOOTPATH	800	SINGLE ARM	NOT APPLICABLE	RIGID COLUMN	URBIS	AXIA 2 S1	PETITJEAN	SHEET STEEL	6	GALVANISED	DAER
46101933	MILLFIELDS	Barton upon Humber Parish	502798.29	421453.17	11	7010	00199307	01/04/1994 00:00	5	2	LESS THAN 30MPH	BACK OF FOOTPATH	800	SINGLE ARM	NOT APPLICABLE	RIGID COLUMN	URBIS	AXIA 2 S1	PETITJEAN	SHEET STEEL	6	GALVANISED	DAER
46101933	MILLFIELDS	Barton upon Humber Parish	502820.34	421439.73	12	7011	00199308	01/04/1994 00:00	5	2	LESS THAN 30MPH	BACK OF FOOTPATH	800	SINGLE ARM	NOT APPLICABLE	RIGID COLUMN	URBIS	AXIA 2 S1	PETITJEAN	SHEET STEEL	6	GALVANISED	DAER
46101933	MILLFIELDS	Barton upon Humber Parish	502881.13	421442.56	13	7012	00199309	01/04/1994 00:00	5	2	LESS THAN 30MPH	BACK OF FOOTPATH	800	SINGLE ARM	NOT APPLICABLE	RIGID COLUMN	URBIS	AXIA 2 S1	PETITJEAN	SHEET STEEL	6	GALVANISED	DAER
46101933	MILLFIELDS	Barton upon Humber Parish	502902.16	421428.6	14	7013	00199310	01/04/1994 00:00	5	2	LESS THAN 30MPH	BACK OF FOOTPATH	800	SINGLE ARM	NOT APPLICABLE	RIGID COLUMN	URBIS	AXIA 2 S1	PETITJEAN	SHEET STEEL	6	GALVANISED	DAER
46101933	MILLFIELDS	Barton upon Humber Parish	502923.82	421436.99	15	7014	00199311	01/04/1994 00:00	5	2	LESS THAN 30MPH	BACK OF FOOTPATH	800	SINGLE ARM	NOT APPLICABLE	RIGID COLUMN	URBIS	AXIA 2 S1	PETITJEAN	SHEET STEEL	6	GALVANISED	DAER
46101933	MILLFIELDS	Barton upon Humber Parish	502947.54	421421.33	16	7015	00199312	01/04/1994 00:00	5	2	LESS THAN 30MPH	BACK OF FOOTPATH	800	SINGLE ARM	NOT APPLICABLE	RIGID COLUMN	URBIS	AXIA 2 S1	PETITJEAN	SHEET STEEL	6	GALVANISED	DAER
46101933	MILLFIELDS	Barton upon Humber Parish	502972.62	421427.58	17	7016	00199313	01/04/1994 00:00	5	2	LESS THAN 30MPH	BACK OF FOOTPATH	800	SINGLE ARM	NOT APPLICABLE	RIGID COLUMN	URBIS	AXIA 2 S1	PETITJEAN	SHEET STEEL	6	GALVANISED	DAER
46101933	MILLFIELDS	Barton upon Humber Parish	502997.65	421417.44	18	7017	00199314	01/04/1994 00:00	5	2	LESS THAN 30MPH	BACK OF FOOTPATH	800	SINGLE ARM	NOT APPLICABLE	RIGID COLUMN	URBIS	AXIA 2 S1	PETITJEAN	SHEET STEEL	6	GALVANISED	DAER
46101933	MILLFIELDS	Barton upon Humber Parish	503022.34	421408.4	19	7018	00199315	01/04/1994 00:00	5	2	LESS THAN 30MPH	BACK OF FOOTPATH	800	SINGLE ARM	NOT APPLICABLE	RIGID COLUMN	URBIS	AXIA 2 S1	PETITJEAN	SHEET STEEL	6	GALVANISED	DAER
46101933	MILLFIELDS	Barton upon Humber Parish	502604.45	421386.43	2	7001	00199298	01/04/1994 00:00	5	2	LESS THAN 30MPH	BACK OF FOOTPATH	800	SINGLE ARM	NOT APPLICABLE	RIGID COLUMN	URBIS	AXIA 2 S1	PETITJEAN	SHEET STEEL	6	GALVANISED	DAER
46101933	MILLFIELDS	Barton upon Humber Parish	503045.55	421404.15	20	7019	00199316	01/04/1994 00:00	5	2	LESS THAN 30MPH	BACK OF FOOTPATH	800	SINGLE ARM	NOT APPLICABLE	RIGID COLUMN	URBIS	AXIA 2 S1	PETITJEAN	SHEET STEEL	6	GALVANISED	DAER
46101933	MILLFIELDS	Barton upon Humber Parish	503069.11	421391.77	21	7020	00199317	01/04/1994 00:00	5	2	LESS THAN 30MPH	BACK OF FOOTPATH	800	SINGLE ARM	NOT APPLICABLE	RIGID COLUMN	URBIS	AXIA 2 S1	PETITJEAN	SHEET STEEL	6	GALVANISED	DAER
46101933	MILLFIELDS	Barton upon Humber Parish	502629.11	421382.88	3	7002	00199299	01/04/1994 00:00	5	2	LESS THAN 30MPH	BACK OF FOOTPATH	800	SINGLE ARM	NOT APPLICABLE	RIGID COLUMN	URBIS	AXIA 2 S1	PETITJEAN	SHEET STEEL	6	GALVANISED	DAER
46101933	MILLFIELDS	Barton upon Humber Parish	502653.69	421389.74	4	7003	00199300	01/04/1994 00:00	5	2	LESS THAN 30MPH	VERGE	800	SINGLE ARM	NOT APPLICABLE	RIGID COLUMN	URBIS	AXIA 2 S1	PETITJEAN	SHEET STEEL	6	GALVANISED	DAER
46101933	MILLFIELDS	Barton upon Humber Parish	502677.57	421377.28	5	7004	00199301	01/04/1994 00:00	5	2	LESS THAN 30MPH	BACK OF FOOTPATH	800	SINGLE ARM	NOT APPLICABLE	RIGID COLUMN	URBIS	AXIA 2 S1	PETITJEAN	SHEET STEEL	6	GALVANISED	DAER
46101933	MILLFIELDS	Barton upon Humber Parish	502700.09	421379.28	6	7005	00199302	01/04/1994 00:00	5	2	LESS THAN 30MPH	BACK OF FOOTPATH	800	SINGLE ARM	NOT APPLICABLE	RIGID COLUMN	URBIS	AXIA 2 S1	PETITJEAN	SHEET STEEL	6	GALVANISED	DAER
46101933	MILLFIELDS	Barton upon Humber Parish	502723.05	421389.28	7	7006	00199303	01/04/1994 00:00	5	2	LESS THAN 30MPH	BACK OF FOOTPATH	800	SINGLE ARM	NOT APPLICABLE	RIGID COLUMN	URBIS	AXIA 2 S1	PETITJEAN	SHEET STEEL	6	GALVANISED	DAER
46101933	MILLFIELDS	Barton upon Humber Parish	502734.85	421412.17	8	7007	00199304	01/04/1994 00:00	5	2	LESS THAN 30MPH	BACK OF FOOTPATH	800	SINGLE ARM	NOT APPLICABLE	RIGID COLUMN	URBIS	AXIA 2 S1	PETITJEAN	SHEET STEEL	6	GALVANISED	DAER
46101933	MILLFIELDS	Barton upon Humber Parish	502751.57	421428.25	9	7008	00199305	01/04/1994 00:00	5	2	LESS THAN 30MPH	BACK OF FOOTPATH	800	SINGLE ARM	NOT APPLICABLE	RIGID COLUMN	URBIS	AXIA 2 S1	PETITJEAN	SHEET STEEL	6	GALVANISED	DAER
46101934	MOUNT AVENUE	Barton upon Humber Parish	502949.68	421577.49	1	7000	00199318	15/06/2019 00:00	5	2	LESS THAN 30MPH	BACK OF FOOTPATH	0	POST TOP	NOT APPLICABLE	RIGID COLUMN	URBIS	AXIA 2 S1	MALLATITE	TUBULAR STEEL	6	GALVANISED	TUBULAR
46101934	MOUNT AVENUE	Barton upon Humber Parish	502959.06	421605.4	2	7001	00199319	01/04/2010 00:00	5	2	LESS THAN 30MPH	BACK OF FOOTPATH	0	POST TOP	NOT APPLICABLE	RIGID COLUMN	URBIS	AXIA 2 S1	MALLATITE	TUBULAR STEEL	6	GALVANISED	TUBULAR
46101934	MOUNT AVENUE	Barton upon Humber Parish	502940.79	421633.11	3	7002	00199320	15/06/2019 00:00	5	2	LESS THAN 30MPH	BACK OF FOOTPATH	0	POST TOP	NOT APPLICABLE	RIGID COLUMN	URBIS	AXIA 2 S1	MALLATITE	TUBULAR STEEL	6	GALVANISED	TUBULAR
46101934	MOUNT AVENUE	Barton upon Humber Parish	502951.11	421654.76	4	7003	00199321	15/06/2019 00:00	5	2	LESS THAN 30MPH	BACK OF FOOTPATH	0	POST TOP	NOT APPLICABLE	RIGID COLUMN	URBIS	AXIA 2 S1	MALLATITE	TUBULAR STEEL	6	GALVANISED	TUBULAR
46101934	MOUNT AVENUE	Barton upon Humber Parish	502918.32	421652.32	5	7004	00204063	01/04/1989 00:00	5	2	NOT ON A ROAD	BACK OF FOOTPATH	0	POST TOP	NOT APPLICABLE	MID HINGED	URBIS	AXIA 2 S1	PETITJEAN	SHEET STEEL	5	GALVANISED	LEVEN
46101935	MORGAN WAY	New Holland Parish	507866.98	423489.71	1	7000	00199322	01/04/1989 00:00	4	1	LESS THAN 30MPH	BACK OF FOOTPATH	2000	SINGLE ARM	LIGHT GREY	RIGID COLUMN	URBIS	AXIA 2 S1	PETITJEAN	SHEET STEEL	8	PAINTED	THAMES
46101935	MORGAN WAY	New Holland Parish	507894.7	423493.25	2	7001	00199323	01/04/1989 00:00	4	1	LESS THAN 30MPH	BACK OF FOOTPATH	2000	SINGLE ARM	LIGHT GREY	RIGID COLUMN	URBIS	AXIA 2 S1	PETITJEAN	SHEET STEEL	8	PAINTED	THAMES
46101935	MORGAN WAY	New Holland Parish	507927.11	423500.05	3	7002	00199324	01/04/1989 00:00	4	1	LESS THAN 30MPH	BACK OF FOOTPATH	2000	SINGLE ARM	LIGHT GREY	RIGID COLUMN	URBIS	AXIA 2 S1	PETITJEAN	SHEET STEEL	8	PAINTED	THAMES
46101935	MORGAN WAY	New Holland Parish	507960.38	423506.87	4	7003	00199325	01/04/1989 00:00	4	1	LESS THAN 30MPH	BACK OF FOOTPATH	2000	SINGLE ARM	LIGHT GREY	RIGID COLUMN	URBIS	AXIA 2 S1	PETITJEAN	SHEET STEEL	8	PAINTED	THAMES
46101935	MORGAN WAY	New Holland Parish	507992.81	423514.45	5	7004	00199326	01/04/1989 00:00	4	1	LESS THAN 30MPH	BACK OF FOOTPATH	2000	SINGLE ARM	LIGHT GREY	RIGID COLUMN	URBIS	AXIA 2 S1	PETITJEAN	SHEET STEEL	8	PAINTED	THAMES
46101935	MORGAN WAY	New Holland Parish	508014.42	423530.05	6	7005	00199327	01/04/1989 00:00	4	1	LESS THAN 30MPH	BACK OF FOOTPATH	2000	SINGLE ARM	LIGHT GREY	RIGID COLUMN	URBIS	AXIA 2 S1	PETITJEAN	SHEET STEEL	8	PAINTED	THAMES
46101935	MORGAN WAY	New Holland Parish	508021.35	423498.33	7	7006	00199328	01/04/1989 00:00	4	1	LESS THAN 30MPH	BACK OF FOOTPATH	2000	SINGLE ARM	LIGHT GREY	RIGID COLUMN	URBIS	AXIA 2 S1	PETITJEAN	SHEET STEEL	8	PAINTED	THAMES
46101936	MOUNTBATTEN CLOSE	Bottesford Parish	489461.88	407621.81	1	7000	00199329	01/04/1988 00:00	3	1	LESS THAN 30MPH	BACK OF FOOTPATH	0	POST TOP	NOT APPLICABLE	RIGID COLUMN	URBIS	AXIA 2 S1	PETITJEAN	SHEET STEEL	5	GALVANISED	NIDD
46101936	MOUNTBATTEN CLOSE	Bottesford Parish	489477.86	407643.6	2	7001	00199330	01/04/1988 00:00	3	1	LESS THAN 30MPH	BACK OF FOOTPATH	0	POST TOP	NOT APPLICABLE	RIGID COLUMN	URBIS	AXIA 2 S1	PETITJEAN	SHEET STEEL	5	GALVANISED	NIDD
46101936	MOUNTBATTEN CLOSE	Bottesford Parish	489489.96	407634.19	3	7002	00199331	01/04/1988 00:00	3	1	LESS THAN 30MPH	BACK OF FOOTPATH	0	POST TOP	NOT APPLICABLE	RIGID COLUMN	URBIS	AXIA 2 S1	PETITJEAN	SHEET STEEL	5	GALVANISED	NIDD
46101936	MOUNTBATTEN CLOSE	Bottesford Parish	489508.59	407642.14	4	7003	00199332	01/04/1988 00:00	3	1	LESS THAN 30MPH	BACK OF FOOTPATH	0	POST TOP	NOT APPLICABLE	RIGID COLUMN	URBIS	AXIA 2 S1	PETITJEAN	SHEET STEEL	5	GALVANISED	NIDD
46101936	MOUNTBATTEN CLOSE	Bottesford Parish	489512.61	407657.81	5	7004	00199333	23/08/2021 00:00	3	1	LESS THAN 30MPH	VERGE	0	POST TOP	NOT APPLICABLE	RIGID COLUMN	URBIS	AXIA 2 S1	MALLATITE	TUBULAR STEEL	6	GALVANISED	TUBULAR
46101936	MOUNTBATTEN CLOSE	Bottesford Parish	489521.28	407638.16	6	7005	00199334	01/04/1988 00:00	3	1	LESS THAN 30MPH	VERGE	0	POST TOP	NOT APPLICABLE	RIGID COLUMN	URBIS	AXIA 2 S1	PETITJEAN	SHEET STEEL	5	GALVANISED	NIDD
46101937	NEWBIGG	Crowle Parish	476924.04	413370.68	1	7000	00199335	01/04/2001 00:00	5	1	LESS THAN 30MPH	BACK OF FOOTPATH	0	POST TOP	NOT APPLICABLE	RIGID COLUMN	URBIS	AXIA 2 S1	MALLATITE	TUBULAR STEEL	5	GALVANISED	STEPPED TUBULAR
46101937	NEWBIGG	Crowle Parish	476908.73	413387.06	2	7001	00199336	01/04/2001 00:00	5	1	LESS THAN 30MPH	BACK OF FOOTPATH	0	POST TOP	NOT APPLICABLE	RIGID COLUMN	URBIS	AXIA 2 S1	MALLATITE	TUBULAR STEEL	5	GALVANISED	STEPPED TUBULAR
46101937	NEWBIGG	Crowle Parish	476903.62	413405.34	3	7002	00199337	01/04/2001 00:00	5	1	LESS THAN 30MPH	BACK OF FOOTPATH	0	POST TOP	NOT APPLICABLE	RIGID COLUMN	URBIS	AXIA 2 S1	MALLATITE	TUBULAR STEEL	5	GALVANISED	STEPPED TUBULAR
46101937	NEWBIGG	Crowle Parish	476878.09	413434.1	4	7003	00199338	01/04/2001 00:00	5	1	LESS THAN 30MPH	BACK OF FOOTPATH	0	POST TOP	NOT APPLICABLE	RIGID COLUMN	URBIS	AXIA 2 S1	MALLATITE	TUBULAR STEEL	5	GALVANISED	STEPPED TUBULAR
46101937	NEWBIGG	Crowle Parish	476860.88	413472.81	5	7004	00199339	01/04/2001 00:00	5	1	LESS THAN 30MPH	BACK OF FOOTPATH	0	POST TOP	NOT APPLICABLE	RIGID COLUMN	URBIS	AXIA 2 S1	MALLATITE	TUBULAR STEEL	5	GALVANISED	STEPPED TUBULAR
46101937	NEWBIGG	Crowle Parish	476846.19	413497.91	6	7005	00199340	01/04/2001 00:00	5	1	LESS THAN 30MPH	BACK OF FOOTPATH	0	POST TOP	NOT APPLICABLE	RIGID COLUMN	URBIS	AXIA 2 S1	MALLATITE	TUBULAR STEEL	5	GALVANISED	STEPPED TUBULAR
46101937	NEWBIGG	Crowle Parish	476834.22	413512.2	7	7006	00199341	01/04/2001 00:00	5	1	LESS THAN 30MPH	BACK OF FOOTPATH	0	POST TOP	NOT APPLICABLE	RIGID COLUMN	URBIS	AXIA 2 S1	MALLATITE	TUBULAR STEEL	5	GALVANISED	STEPPED TUBULAR
46101937	NEWBIGG	Crowle Parish	476807.2	413529.95	8	7007	00199342	01/04/2001 00:00	5	1	LESS THAN 30MPH	BACK OF FOOTPATH	0	POST TOP	NOT APPLICABLE	RIGID COLUMN	URBIS	AXIA 2 S1	MALLATITE	TUBULAR STEEL	5	GALVANISED	STEPPED TUBULAR
46101937	NEWBIGG	Crowle Parish	476790.6	413540.76	9	7008	00199343	01/04/2001 00:00	5	1	LESS THAN 30MPH	BACK OF FOOTPATH	0	POST TOP	NOT APPLICABLE	RIGID COLUMN	URBIS	AXIA 2 S1	MALLATITE	TUBULAR STEEL	5	GALVANISED	STEPPED TUBULAR
46101939	NEW ROAD	Worlaby Parish	501161.65	413818.79	1	7000	00199344	01/04/1973 00:00	6	3	LESS THAN 30MPH	VERGE	500	SINGLE ARM	MID GREY	RIGID COLUMN	URBIS	AXIA 2 S1	PETITJEAN	SHEET STEEL	5	PAINTED	DAER
46101939	NEW ROAD	Worlaby Parish	501403.3	414034.68	10	7009	00199353	01/04/1973 00:00	6	3	LESS THAN 30MPH	ON POLE	500	SINGLE ARM	NOT APPLICABLE	POLE MOUNTED	URBIS	AXIA 2 S1	WOODEN PO	WOOD	5	NOT APPLICABI	Not Applicable
46101939	NEW ROAD	Worlaby Parish	501186.72	413844.61	2	7001	00199345	01/04/1973 00:00	6	3	LESS THAN 30MPH	VERGE	500	SINGLE ARM	MID GREY	RIGID COLUMN	URBIS	AXIA 2 S1	PETITJEAN	SHEET STEEL	5	PAINTED	DAER
46101939	NEW ROAD	Worlaby Parish	501217.11	413865.29	3	7002	00199346	01/04/1973 00:00	6	3	LESS THAN 30MPH	VERGE	500	SINGLE ARM	MID GREY	RIGID COLUMN	URBIS	AXIA 2 S1	PETITJEAN	SHEET STEEL	5	PAINTED	DAER
46101939	NEW ROAD	Worlaby Parish	501249.17	413894.79	4	7003	00199347	01/04/1973 00:00	6	3	LESS THAN 30MPH	VERGE	500	SINGLE ARM	MID GREY	RIGID COLUMN	URBIS	AXIA 2 S1	PETITJEAN	SHEET STEEL	5	PAINTED	DAER
46101939	NEW ROAD	Worlaby Parish	501265.33	413918.96	5	7004	00199348	01/04/1973 00:00	6	3	LESS THAN 30MPH	VERGE	500	SINGLE ARM	MID GREY	RIGID COLUMN	URBIS	AXIA 2 S1	PETITJEAN	SHEET STEEL	5	PAINTED	DAER
46101939	NEW ROAD	Worlaby Parish	501287.37	413954.85	6	7005	00199349	01/04/1973 00:00	6	3	LESS THAN 30MPH	VERGE	500	SINGLE ARM	MID GREY	RIGID COLUMN	URBIS	AXIA 2 S1	PETITJEAN	SHEET STEEL	5	PAINTED	DAER
46101939	NEW ROAD	Worlaby Parish	501301.52	413978.07	7	7006	00199350	01/04/1973 00:00	6	3	LESS THAN 30MPH	VERGE	500	SINGLE ARM	MID GREY	RIGID COLUMN	URBIS	AXIA 2 S1	PETITJEAN	SHEET STEEL	5	PAINTED	DAER
46101939	NEW ROAD	Worlaby Parish	501321.73	414009.65	8	7007	00199351	01/04/1973 00:00	6	3	LESS THAN 30MPH	VERGE	500	SINGLE ARM	MID GREY	RIGID COLUMN	URBIS	AXIA 2 S1	PETITJEAN	SHEET STEEL	5	PAINTED	DAER
46101939	NEW ROAD	Worlaby Parish	501377.89	414020.26	9	7008	00199352	01/04/1973 00:00	6	3	LESS THAN 30MPH	ON POLE	500	SINGLE ARM	NOT APPLICABLE	POLE MOUNTED	URBIS	AXIA 2 S1	WOODEN PO	WOOD	5	NOT APPLICABI	Not Applicable
46101940	NEVILLE CRESCENT	Winterton Parish	492212.89	418677.91	1	7000	00199354	01/04/2001 00:00	1	1	LESS THAN 30MPH	BACK OF FOOTPATH	300	SINGLE ARM	NOT APPLICABLE	RIGID COLUMN	URBIS	AXIA 2 S1	MALLATITE	TUBULAR STEEL	6	GALVANISED	STEPPED TUBULAR
46101940	NEVILLE CRESCENT	Winterton Parish	492312.49	418768.95	10	7009	00199363	01/04/2001 00:00	1	1	LESS THAN 30MPH	BACK OF FOOTPATH	300	SINGLE ARM	NOT APPLICABLE	RIGID COLUMN	URBIS	AXIA 2 S1	MALLATITE	TUBULAR STEEL	6	GALVANISED	STEPPED TUBULAR
46101940	NEVILLE CRESCENT	Winterton Parish	492289.07	418736.68	11	7010	00199364	01/04/2001 00:00	1	1	LESS THAN 30MPH	BACK OF FOOTPATH	300	SINGLE ARM	NOT APPLICABLE	RIGID COLUMN	URBIS	AXIA 2 S1	MALLATITE	TUBULAR STEEL	6	GALVANISED	STEPPED TUBULAR
46101940	NEVILLE CRESCENT	Winterton Parish	492303.59	418711.68	12	7011	00199365	01/04/2001 00:00	1	1	LESS THAN 30MPH	BACK OF FOOTPATH	300	SINGLE ARM	NOT APPLICABLE	RIGID COLUMN	URBIS	AXIA 2 S1	MALLATITE	TUBULAR STEEL	6	GALVANISED	STEPPED TUBULAR
46101940	NEVILLE CRESCENT	Winterton Parish	492216.65	418706.68	2	7001	00199355	01/04/2001 00:00	1	1	LESS THAN 30MPH	BACK OF FOOTPATH	300	SINGLE ARM	NOT APPLICABLE	RIGID COLUMN	URBIS	AXIA 2 S1	MALLATITE	TUBULAR STEEL	6	GALVANISED	STEPPED TUBULAR
46101940	NEVILLE CRESCENT	Winterton Parish	492212.39	418726.91	3	7002	00199356	01/04/2001 00:00	1	1	LESS THAN 30MPH	BACK OF FOOTPATH	300	SINGLE ARM	NOT APPLICABLE	RIGID COLUMN	URBIS	AXIA 2 S1	MALLATITE	TUBULAR STEEL	6	GALVANISED	STEPPED TUBULAR
46101940	NEVILLE CRESCENT	Winterton Parish	492197.33	418737.93	4	7003	00199357	01/04/2001 00:00	1	1	LESS THAN 30MPH	BACK OF FOOTPATH	300	SINGLE ARM	NOT APPLICABLE	RIGID COLUMN	URBIS	AXIA 2 S1	MALLATITE	TUBULAR STEEL	6	GALVANISED	STEPPED TUBULAR
46101940	NEVILLE CRESCENT	Winterton Parish	492212.1	418758.33	5	7004	00199358	01/04/2001 00:00	1	1	LESS THAN 30MPH	BACK OF FOOTPATH	300	SINGLE ARM	NOT APPLICABLE	RIGID COLUMN	URBIS	AXIA 2 S1	MALLATITE	TUBULAR STEEL	6	GALVANISED	STEPPED TUBULAR
46101940	NEVILLE CRESCENT	Winterton Parish	492235.48	418732.53	6	7005	00199359	01/04/2001 00:00	1	1	LESS THAN 30MPH	BACK OF FOOTPATH	300	SINGLE ARM	NOT APPLICABLE	RIGID COLUMN	URBIS	AXIA 2 S1	MALLATITE	TUBULAR STEEL	6	GALVANISED	STEPPED TUBULAR
46101940	NEVILLE CRESCENT	Winterton Parish	492262.38	418745.38	7	7006	00199360	01/04/2001 00:00	1	1	LESS THAN 30MPH	BACK OF FOOTPATH	300	SINGLE ARM	NOT APPLICABLE	RIGID COLUMN	URBIS	AXIA 2 S1	MALLATITE	TUBULAR STEEL	6	GALVANISED	STEPPED TUBULAR
46101940	NEVILLE CRESCENT	Winterton Parish	492288.02	418752.55	8	7007	00199361	01/04/2001 00:00	1	1	LESS THAN 30MPH	BACK OF FOOTPATH	300	SINGLE ARM	NOT APPLICABLE	RIGID COLUMN	URBIS	AXIA 2 S1	MALLATITE	TUBULAR STEEL	6	GALVANISED	STEPPED TUBULAR
46101940	NEVILLE CRESCENT	Winterton Parish	492287.22	418780.24	9	7008	00199362	01/04/2001 00:00	1	1	LESS THAN 30MPH	BACK OF FOOTPATH	300	SINGLE ARM	NOT APPLICABLE	RIGID COLUMN	URBIS	AXIA 2 S1	MALLATITE	TUBULAR STEEL	6	GALVANISED	STEPPED TUBULAR
46101941	NEVILLE ROAD	Scunthorpe	490251.81	410793.05	1	7000	00199369	01/04/1980 00:00	2	4	LESS THAN 30MPH	BACK OF FOOTPATH	300	SINGLE ARM	NOT APPLICABLE	RIGID COLUMN	URBIS	AXIA 2 S1	PETITJEAN	SHEET STEEL	5	GALVANISED	DAER
46101941	NEVILLE ROAD	Scunthorpe	490109.37	410719.03	10	7009	00199378	26/03/2020 00:00	2	4	LESS THAN 30MPH	BACK OF FOOTPATH	0	POST TOP	NOT APPLICABLE	RIGID COLUMN	URBIS	AXIA 2 S1	MALLATITE	TUBULAR STEEL	6	GALVANISED	TUBULAR
46101941	NEVILLE ROAD	Scunthorpe	490086.47	410745.84	11	7010	00199379	26/03/2020 00:00	2	4	LESS THAN 30MPH	BACK OF FOOTPATH	0	POST TOP	NOT APPLICABLE	RIGID COLUMN	URBIS	AXIA 2 S1	MALLATITE	TUBULAR STEEL	6	GALVANISED	TUBULAR
46101941	NEVILLE ROAD	Scunthorpe	490094.11	410777.73	12	7011	00199380	01/04/2013 00:00	2	4	LESS THAN 30MPH	BACK OF FOOTPATH	0	POST TOP	NOT APPLICABLE	RIGID COLUMN	URBIS	AXIA 2 S1	MALLATITE	TUBULAR STEEL	6	GALVANISED	TUBULAR
46101941	NEVILLE ROAD	Scunthorpe	490245.45	410751.92	2	7001	00199370	01/04/2013 00:00	2	4	LESS THAN 30MPH	BACK OF FOOTPATH	0	POST TOP	NOT APPLICABLE	RIGID COLUMN	URBIS	AXIA 2 S1	MALLATITE	TUBULAR STEEL	6	GALVANISED	TUBULAR
46101941	NEVILLE ROAD	Scunthorpe	490345.72	410740.58	3	7002	00199371	26/03/2020 00:00	2	4	LESS THAN 30MPH	BACK OF FOOTPATH	0	POST TOP	NOT APPLICABLE	RIGID COLUMN	URBIS	AXIA 2 S1	MALLATITE	TUBULAR STEEL	6	GALVANISED	TUBULAR
46101941	NEVILLE ROAD	Scunthorpe	490312.41	410737.38	4	7003	00199372	26/03/2020 00:00	2	4	LESS THAN 30MPH	BACK OF FOOTPATH	0	POST TOP	NOT APPLICABLE	RIGID COLUMN	URBIS	AXIA 2 S1	MALLATITE	TUBULAR STEEL	6	GALVANISED	TUBULAR
46101941	NEVILLE ROAD	Scunthorpe	490278.64	410743.34	5	7004	00199373	26/03/2020 00:00	2	4	LESS THAN 30MPH	BACK OF FOOTPATH	0	POST TOP	NOT APPLICABLE	RIGID COLUMN	URBIS	AXIA 2 S1	MALLATITE	TUBULAR STEEL	6	GALVANISED	TUBULAR
46101941	NEVILLE ROAD	Scunthorpe	490249.96	410732.1	6	7005	00199374	01/04/2013 00:00	2

46101958	OSWALD ROAD	Scunthorpe	489217.42	410993.87	9	7008	00199537	19/03/2024 00:00	4	4	LESS THAN 30MPH	FRONT OF FOOTPATH	1000	SINGLE ARM	NOT APPLICABLE	RIGID COLUMN	URBIS	AXIA 2 S1	STANTON	TUBULAR STEEL	10	GALVANISED	TUBULAR
46101959	OUTGATE	Crowle Parish	478108.59	411768.94	1	7000	00199545	09/01/2020 00:00	5	1	LESS THAN 30MPH	VERGE	1000	SINGLE ARM	NOT APPLICABLE	RIGID COLUMN	URBIS	AXIA 2 S1	MALLATITE	TUBULAR STEEL	10	GALVANISED	TUBULAR
46101959	OUTGATE	Crowle Parish	478330.89	411846.41	10	7009	00199554	01/04/1993 00:00	5	1	LESS THAN 30MPH	BACK OF FOOTPATH	300	SINGLE ARM	NOT APPLICABLE	RIGID COLUMN	URBIS	AXIA 2 S1	PETITJEAN	SHEET STEEL	5	GALVANISED	DAER
46101959	OUTGATE	Crowle Parish	478357.51	411867.37	11	7010	00199555	01/04/1993 00:00	5	1	LESS THAN 30MPH	BACK OF FOOTPATH	300	SINGLE ARM	NOT APPLICABLE	RIGID COLUMN	URBIS	AXIA 2 S1	PETITJEAN	SHEET STEEL	5	GALVANISED	DAER
46101959	OUTGATE	Crowle Parish	478374.02	411884.31	12	7011	00199556	01/04/1993 00:00	5	1	LESS THAN 30MPH	BACK OF FOOTPATH	300	SINGLE ARM	NOT APPLICABLE	RIGID COLUMN	URBIS	AXIA 2 S1	PETITJEAN	SHEET STEEL	5	GALVANISED	DAER
46101959	OUTGATE	Crowle Parish	478391.76	411901.25	13	7012	00199557	01/04/1993 00:00	5	1	LESS THAN 30MPH	BACK OF FOOTPATH	300	SINGLE ARM	NOT APPLICABLE	RIGID COLUMN	URBIS	AXIA 2 S1	PETITJEAN	SHEET STEEL	5	GALVANISED	DAER
46101959	OUTGATE	Crowle Parish	478419.6	411913.1	14	7013	00199558	01/04/1993 00:00	5	1	LESS THAN 30MPH	VERGE	300	SINGLE ARM	NOT APPLICABLE	RIGID COLUMN	URBIS	AXIA 2 S1	PETITJEAN	SHEET STEEL	5	GALVANISED	DAER
46101959	OUTGATE	Crowle Parish	478443.67	411934.25	15	7014	00199559	01/04/1993 00:00	5	1	LESS THAN 30MPH	BACK OF FOOTPATH	300	SINGLE ARM	NOT APPLICABLE	RIGID COLUMN	URBIS	AXIA 2 S1	PETITJEAN	SHEET STEEL	5	GALVANISED	DAER
46101959	OUTGATE	Crowle Parish	478470.95	411944.69	16	7015	00199560	01/05/2024 00:00	5	1	LESS THAN 30MPH	BACK OF FOOTPATH	0	POST TOP	NOT APPLICABLE	RIGID COLUMN	URBIS	AXIA 2 S1	MALLATITE	SHEET STEEL	6	GALVANISED	TUBULAR
46101959	OUTGATE	Crowle Parish	478494.69	411911.2	17	7016	00199561	01/04/1993 00:00	5	1	LESS THAN 30MPH	BACK OF FOOTPATH	300	SINGLE ARM	NOT APPLICABLE	RIGID COLUMN	URBIS	AXIA 2 S1	PETITJEAN	SHEET STEEL	5	GALVANISED	DAER
46101959	OUTGATE	Crowle Parish	478518.69	411904.76	18	7017	00199562	01/04/1993 00:00	5	1	LESS THAN 30MPH	BACK OF FOOTPATH	300	SINGLE ARM	NOT APPLICABLE	RIGID COLUMN	URBIS	AXIA 2 S1	PETITJEAN	SHEET STEEL	5	GALVANISED	DAER
46101959	OUTGATE	Crowle Parish	478536.17	411916.59	19	7018	00199563	01/04/1993 00:00	5	1	LESS THAN 30MPH	VERGE	300	SINGLE ARM	NOT APPLICABLE	RIGID COLUMN	URBIS	AXIA 2 S1	PETITJEAN	SHEET STEEL	5	GALVANISED	DAER
46101959	OUTGATE	Crowle Parish	478142.03	411789.87	2	7001	00199546	01/04/1993 00:00	5	1	LESS THAN 30MPH	VERGE	300	SINGLE ARM	NOT APPLICABLE	RIGID COLUMN	URBIS	AXIA 2 S1	PETITJEAN	SHEET STEEL	5	GALVANISED	DAER
46101959	OUTGATE	Crowle Parish	478564.33	411925.01	20	7019	00199564	01/04/1993 00:00	5	1	LESS THAN 30MPH	VERGE	300	SINGLE ARM	NOT APPLICABLE	RIGID COLUMN	URBIS	AXIA 2 S1	PETITJEAN	SHEET STEEL	5	GALVANISED	DAER
46101959	OUTGATE	Crowle Parish	478587.87	411932.11	21	7020	00199565	01/04/1993 00:00	5	1	LESS THAN 30MPH	VERGE	300	SINGLE ARM	NOT APPLICABLE	RIGID COLUMN	URBIS	AXIA 2 S1	PETITJEAN	SHEET STEEL	5	GALVANISED	DAER
46101959	OUTGATE	Crowle Parish	478639.57	411950.34	22	7021	00199566	01/04/1993 00:00	5	1	LESS THAN 30MPH	BACK OF FOOTPATH	300	SINGLE ARM	NOT APPLICABLE	RIGID COLUMN	URBIS	AXIA 2 S1	PETITJEAN	SHEET STEEL	5	GALVANISED	DAER
46101959	OUTGATE	Crowle Parish	478675.88	411970.27	23	7022	00199567	01/04/1993 00:00	5	1	LESS THAN 30MPH	VERGE	300	SINGLE ARM	NOT APPLICABLE	RIGID COLUMN	URBIS	AXIA 2 S1	PETITJEAN	SHEET STEEL	5	GALVANISED	DAER
46101959	OUTGATE	Crowle Parish	478705.66	411986.64	24	7023	00199568	01/04/1993 00:00	5	1	LESS THAN 30MPH	VERGE	300	SINGLE ARM	NOT APPLICABLE	RIGID COLUMN	URBIS	AXIA 2 S1	PETITJEAN	SHEET STEEL	5	GALVANISED	DAER
46101959	OUTGATE	Crowle Parish	478166.62	411799.92	3	7002	00199547	01/04/1993 00:00	5	1	LESS THAN 30MPH	BACK OF FOOTPATH	300	SINGLE ARM	NOT APPLICABLE	RIGID COLUMN	URBIS	AXIA 2 S1	PETITJEAN	SHEET STEEL	5	GALVANISED	DAER
46101959	OUTGATE	Crowle Parish	478196.98	411800.66	4	7003	00199548	01/04/1993 00:00	5	1	LESS THAN 30MPH	BACK OF FOOTPATH	300	SINGLE ARM	NOT APPLICABLE	RIGID COLUMN	URBIS	AXIA 2 S1	PETITJEAN	SHEET STEEL	5	GALVANISED	DAER
46101959	OUTGATE	Crowle Parish	478219.66	411794.75	5	7004	00199549	01/04/1993 00:00	5	1	LESS THAN 30MPH	VERGE	300	SINGLE ARM	NOT APPLICABLE	RIGID COLUMN	URBIS	AXIA 2 S1	PETITJEAN	SHEET STEEL	5	GALVANISED	DAER
46101959	OUTGATE	Crowle Parish	478239.28	411806.58	6	7005	00199550	01/04/1993 00:00	5	1	LESS THAN 30MPH	BACK OF FOOTPATH	300	SINGLE ARM	NOT APPLICABLE	RIGID COLUMN	URBIS	AXIA 2 S1	PETITJEAN	SHEET STEEL	5	GALVANISED	DAER
46101959	OUTGATE	Crowle Parish	478262.07	411802.45	7	7006	00199551	01/04/1993 00:00	5	1	LESS THAN 30MPH	VERGE	300	SINGLE ARM	NOT APPLICABLE	RIGID COLUMN	URBIS	AXIA 2 S1	PETITJEAN	SHEET STEEL	5	GALVANISED	DAER
46101959	OUTGATE	Crowle Parish	478288.95	411811.19	8	7007	00199552	01/04/1993 00:00	5	1	LESS THAN 30MPH	VERGE	300	SINGLE ARM	NOT APPLICABLE	RIGID COLUMN	URBIS	AXIA 2 S1	PETITJEAN	SHEET STEEL	5	GALVANISED	DAER
46101959	OUTGATE	Crowle Parish	478316.1	411826.79	9	7008	00199553	01/04/1993 00:00	5	1	LESS THAN 30MPH	VERGE	300	SINGLE ARM	NOT APPLICABLE	RIGID COLUMN	URBIS	AXIA 2 S1	PETITJEAN	SHEET STEEL	5	GALVANISED	DAER
46101960	OVERTON COURT	Barton upon Humber Parish	503015.76	422307.01	1	7000	00199569	01/04/1980 00:00	5	2	LESS THAN 30MPH	BACK OF FOOTPATH	300	SINGLE ARM	NOT APPLICABLE	RIGID COLUMN	URBIS	AXIA 2 S1	PETITJEAN	SHEET STEEL	5	GALVANISED	DAER
46101960	OVERTON COURT	Barton upon Humber Parish	503009.78	422379.01	11	7008	00199577	17/06/2019 00:00	5	2	LESS THAN 30MPH	BACK OF FOOTPATH	0	POST TOP	NOT APPLICABLE	RIGID COLUMN	URBIS	AXIA 2 S1	MALLATITE	TUBULAR STEEL	6	GALVANISED	TUBULAR
46101960	OVERTON COURT	Barton upon Humber Parish	502993.1	422381.42	12	7009	00199578	17/06/2019 00:00	5	2	LESS THAN 30MPH	BACK OF FOOTPATH	0	POST TOP	NOT APPLICABLE	RIGID COLUMN	URBIS	AXIA 2 S1	MALLATITE	TUBULAR STEEL	6	GALVANISED	TUBULAR
46101960	OVERTON COURT	Barton upon Humber Parish	502972.75	422390.85	13	7010	00199579	17/06/2019 00:00	5	2	LESS THAN 30MPH	BACK OF FOOTPATH	0	POST TOP	NOT APPLICABLE	RIGID COLUMN	URBIS	AXIA 2 S1	MALLATITE	TUBULAR STEEL	6	GALVANISED	TUBULAR
46101960	OVERTON COURT	Barton upon Humber Parish	502951.77	422386.61	14	7011	00199580	17/06/2019 00:00	5	2	LESS THAN 30MPH	VERGE	0	POST TOP	NOT APPLICABLE	RIGID COLUMN	URBIS	AXIA 2 S1	MALLATITE	TUBULAR STEEL	6	GALVANISED	TUBULAR
46101960	OVERTON COURT	Barton upon Humber Parish	502961.18	422369.41	15	7012	00199581	17/06/2019 00:00	5	2	LESS THAN 30MPH	BACK OF FOOTPATH	0	POST TOP	NOT APPLICABLE	RIGID COLUMN	URBIS	AXIA 2 S1	MALLATITE	TUBULAR STEEL	6	GALVANISED	TUBULAR
46101960	OVERTON COURT	Barton upon Humber Parish	502959.44	422349.93	16	7013	00199582	01/04/1980 00:00	5	2	LESS THAN 30MPH	FRONT OF FOOTPATH	300	SINGLE ARM	MID GREY	RIGID COLUMN	URBIS	AXIA 2 S1	PETITJEAN	SHEET STEEL	5	PAINTED	DAER
46101960	OVERTON COURT	Barton upon Humber Parish	502977.4	422356.56	17	7014	00199583	01/04/2010 00:00	5	2	LESS THAN 30MPH	BACK OF FOOTPATH	0	POST TOP	NOT APPLICABLE	RIGID COLUMN	URBIS	AXIA 2 S1	MALLATITE	TUBULAR STEEL	6	GALVANISED	TUBULAR
46101960	OVERTON COURT	Barton upon Humber Parish	503023	422335.59	2	7001	00199570	17/06/2019 00:00	5	2	LESS THAN 30MPH	BACK OF FOOTPATH	0	POST TOP	NOT APPLICABLE	RIGID COLUMN	URBIS	AXIA 2 S1	MALLATITE	TUBULAR STEEL	6	GALVANISED	TUBULAR
46101960	OVERTON COURT	Barton upon Humber Parish	503036.69	422356.12	3	7002	00199571	17/06/2019 00:00	5	2	LESS THAN 30MPH	BACK OF FOOTPATH	0	POST TOP	NOT APPLICABLE	RIGID COLUMN	URBIS	AXIA 2 S1	MALLATITE	TUBULAR STEEL	6	GALVANISED	TUBULAR
46101960	OVERTON COURT	Barton upon Humber Parish	503039.2	422381.95	4	7003	00199572	17/06/2019 00:00	5	2	LESS THAN 30MPH	BACK OF FOOTPATH	0	POST TOP	NOT APPLICABLE	RIGID COLUMN	URBIS	AXIA 2 S1	MALLATITE	TUBULAR STEEL	6	GALVANISED	TUBULAR
46101960	OVERTON COURT	Barton upon Humber Parish	503058.79	422371.48	5	7004	00199573	17/06/2019 00:00	5	2	LESS THAN 30MPH	BACK OF FOOTPATH	0	POST TOP	NOT APPLICABLE	RIGID COLUMN	URBIS	AXIA 2 S1	MALLATITE	TUBULAR STEEL	6	GALVANISED	TUBULAR
46101960	OVERTON COURT	Barton upon Humber Parish	503084.44	422367.93	6	7005	00199574	01/04/2010 00:00	5	2	LESS THAN 30MPH	BACK OF FOOTPATH	0	POST TOP	NOT APPLICABLE	RIGID COLUMN	URBIS	AXIA 2 S1	MALLATITE	TUBULAR STEEL	6	GALVANISED	TUBULAR
46101960	OVERTON COURT	Barton upon Humber Parish	503108.14	422368.67	7	7006	00199575	01/04/1980 00:00	5	2	LESS THAN 30MPH	VERGE	300	SINGLE ARM	MID GREY	RIGID COLUMN	URBIS	AXIA 2 S1	PETITJEAN	SHEET STEEL	5	PAINTED	DAER
46101960	OVERTON COURT	Barton upon Humber Parish	503106.69	422332.35	8	7007	00199576	01/04/2010 00:00	5	2	LESS THAN 30MPH	BACK OF FOOTPATH	0	POST TOP	NOT APPLICABLE	RIGID COLUMN	URBIS	AXIA 2 S1	MALLATITE	TUBULAR STEEL	6	GALVANISED	TUBULAR
46101961	PARK AVENUE	Crowle Parish	477551	412381	1	7009	04200140	01/04/1991 00:00	5	1	LESS THAN 30MPH	BACK OF FOOTPATH	0	POST TOP	NOT APPLICABLE	RIGID COLUMN	URBIS	AXIA 2 S1	PETITJEAN	SHEET STEEL	5	GALVANISED	NIDD
46101961	PARK AVENUE	Crowle Parish	477715.1	412410.93	10	7008	00199592	01/04/1997 00:00	5	1	LESS THAN 30MPH	BACK OF FOOTPATH	0	POST TOP	NOT APPLICABLE	RIGID COLUMN	URBIS	AXIA 2 S1	PETITJEAN	SHEET STEEL	5	GALVANISED	NIDD
46101961	PARK AVENUE	Crowle Parish	477576.55	412398.04	2	7000	00199584	01/04/1991 00:00	5	1	LESS THAN 30MPH	BACK OF FOOTPATH	0	POST TOP	NOT APPLICABLE	RIGID COLUMN	URBIS	AXIA 2 S1	PETITJEAN	SHEET STEEL	5	GALVANISED	NIDD
46101961	PARK AVENUE	Crowle Parish	477601.62	412408.11	3	7001	00199585	01/04/1991 00:00	5	1	LESS THAN 30MPH	BACK OF FOOTPATH	0	POST TOP	NOT APPLICABLE	RIGID COLUMN	URBIS	AXIA 2 S1	PETITJEAN	SHEET STEEL	5	GALVANISED	NIDD
46101961	PARK AVENUE	Crowle Parish	477611.23	412430.36	4	7002	00199586	01/04/1996 00:00	5	1	LESS THAN 30MPH	BACK OF FOOTPATH	0	POST TOP	NOT APPLICABLE	RIGID COLUMN	URBIS	AXIA 2 S1	PETITJEAN	SHEET STEEL	5	GALVANISED	NIDD
46101961	PARK AVENUE	Crowle Parish	477611.54	412460.12	5	7003	00199587	01/04/1991 00:00	5	1	LESS THAN 30MPH	BACK OF FOOTPATH	0	POST TOP	NOT APPLICABLE	RIGID COLUMN	URBIS	AXIA 2 S1	PETITJEAN	SHEET STEEL	5	GALVANISED	NIDD
46101961	PARK AVENUE	Crowle Parish	477626.92	412478.09	6	7004	00199588	01/04/1996 00:00	5	1	LESS THAN 30MPH	BACK OF FOOTPATH	0	POST TOP	NOT APPLICABLE	RIGID COLUMN	URBIS	AXIA 2 S1	PETITJEAN	SHEET STEEL	5	GALVANISED	NIDD
46101961	PARK AVENUE	Crowle Parish	477655.91	412473.15	7	7005	00199589	01/04/1996 00:00	5	1	LESS THAN 30MPH	BACK OF FOOTPATH	0	POST TOP	NOT APPLICABLE	RIGID COLUMN	URBIS	AXIA 2 S1	PETITJEAN	SHEET STEEL	5	GALVANISED	NIDD
46101961	PARK AVENUE	Crowle Parish	477679.29	412449.22	8	7006	00199590	01/04/1995 00:00	5	1	LESS THAN 30MPH	BACK OF FOOTPATH	0	POST TOP	NOT APPLICABLE	RIGID COLUMN	URBIS	AXIA 2 S1	PETITJEAN	SHEET STEEL	5	GALVANISED	NIDD
46101961	PARK AVENUE	Crowle Parish	477700.26	412431.75	9	7007	00199591	01/04/1997 00:00	5	1	LESS THAN 30MPH	BACK OF FOOTPATH	0	POST TOP	NOT APPLICABLE	RIGID COLUMN	URBIS	AXIA 2 S1	PETITJEAN	SHEET STEEL	5	GALVANISED	NIDD
46101962	PARK CLOSE	Haxey Parish	474832.81	399804.13	1	7000	00199593	17/09/2021 00:00	6	2	LESS THAN 30MPH	BACK OF FOOTPATH	0	POST TOP	NOT APPLICABLE	RIGID COLUMN	URBIS	AXIA 2 S1	MALLATITE	TUBULAR STEEL	6	GALVANISED	TUBULAR
46101962	PARK CLOSE	Haxey Parish	474823.29	399782.39	2	7001	00199594	17/09/2021 00:00	6	2	LESS THAN 30MPH	BACK OF FOOTPATH	0	POST TOP	NOT APPLICABLE	RIGID COLUMN	URBIS	AXIA 2 S1	MALLATITE	TUBULAR STEEL	6	GALVANISED	TUBULAR
46101962	PARK CLOSE	Haxey Parish	474807.32	399741.69	3	7002	00199595	17/09/2021 00:00	6	2	LESS THAN 30MPH	BACK OF FOOTPATH	0	POST TOP	NOT APPLICABLE	RIGID COLUMN	URBIS	AXIA 2 S1	MALLATITE	TUBULAR STEEL	6	GALVANISED	TUBULAR
46101962	PARK CLOSE	Haxey Parish	474794.64	399709.05	4	7003	00199596	17/09/2021 00:00	6	2	LESS THAN 30MPH	BACK OF FOOTPATH	0	POST TOP	NOT APPLICABLE	RIGID COLUMN	URBIS	AXIA 2 S1	MALLATITE	TUBULAR STEEL	6	GALVANISED	TUBULAR
46101963	PARK DRIVE	Haxey Parish	474802.03	399782.85	1	7000	00199597	17/09/2021 00:00	6	2	LESS THAN 30MPH	BACK OF FOOTPATH	0	POST TOP	NOT APPLICABLE	RIGID COLUMN	URBIS	AXIA 2 S1	MALLATITE	TUBULAR STEEL	6	GALVANISED	TUBULAR
46101963	PARK DRIVE	Haxey Parish	474771.46	399802.25	2	7001	00199598	17/09/2021 00:00	6	2	LESS THAN 30MPH	BACK OF FOOTPATH	0	POST TOP	NOT APPLICABLE	RIGID COLUMN	URBIS	AXIA 2 S1	MALLATITE	TUBULAR STEEL	6	GALVANISED	TUBULAR
46101963	PARK DRIVE	Haxey Parish	474741.6	399777.07	3	7002	00199599	17/09/2021 00:00	6	2	LESS THAN 30MPH	BACK OF FOOTPATH	0	POST TOP	NOT APPLICABLE	RIGID COLUMN	URBIS	AXIA 2 S1	MALLATITE	TUBULAR STEEL	6	GALVANISED	TUBULAR
46101963	PARK DRIVE	Haxey Parish	474727.46	399746.54	4	7003	00199600	17/09/2021 00:00	6	2	LESS THAN 30MPH	VERGE	0	POST TOP	NOT APPLICABLE	RIGID COLUMN	PHILIPS	PILZEO 16 LED 3.19 KLM	MALLATITE	TUBULAR STEEL	6	GALVANISED	TUBULAR
46101964	PARK FARM ROAD	Scunthorpe	488814.42	413231.99	10	7016	00199617	25/01/2024 00:00	4	4	LESS THAN 30MPH	VERGE	800	SINGLE ARM	NOT APPLICABLE	RIGID COLUMN	URBIS	AXIA 2 S1	MALLATITE	TUBULAR STEEL	8	GALVANISED	TUBULAR
46101964	PARK FARM ROAD	Scunthorpe	488798.58	413245.71	11	7017	00199618	01/04/1982 00:00	4	4	LESS THAN 30MPH	BACK OF FOOTPATH	800	SINGLE ARM	MID GREY	RIGID COLUMN	URBIS	AXIA 2 S1	PETITJEAN	SHEET STEEL	8	PAINTED	THAMES
46101964	PARK FARM ROAD	Scunthorpe	488799.25	413294.27	12	7018	00199619	01/04/1982 00:00	4	4	LESS THAN 30MPH	VERGE	800	SINGLE ARM	MID GREY	RIGID COLUMN	URBIS	AXIA 2 S1	PETITJEAN	SHEET STEEL	8	PAINTED	THAMES
46101964	PARK FARM ROAD	Scunthorpe	488792.03	413319.19	13	7019	00199620	01/04/1982 00:00	4	4	LESS THAN 30MPH	VERGE	800	SINGLE ARM	MID GREY	RIGID COLUMN	URBIS	AXIA 2 S1	PETITJEAN	SHEET STEEL	8	PAINTED	THAMES
46101964	PARK FARM ROAD	Scunthorpe	488783.98	413346.86	14	7020	00199621	28/03/2023 00:00	4	4	LESS THAN 30MPH	VERGE	1000	SINGLE ARM	NOT APPLICABLE	RIGID COLUMN	URBIS	AXIA 2 S1	MALLATITE	TUBULAR STEEL	8	GALVANISED	TUBULAR
46101964	PARK FARM ROAD	Scunthorpe	488774.42	413391.85	16	7021	00199622	01/04/1982 00:00	4	4	LESS THAN 30MPH	VERGE	800	SINGLE ARM	MID GREY	RIGID COLUMN	URBIS	AXIA 2 S1	PETITJEAN	SHEET STEEL	8	PAINTED	THAMES
46101964	PARK FARM ROAD	Scunthorpe	488767.05	413423.15	17	7022	00199623	01/04/1982 00:00	4	4	LESS THAN 30MPH	VERGE	800	SINGLE ARM	NOT APPLICABLE	RIGID COLUMN	URBIS	AXIA 2 S1	PETITJEAN	SHEET STEEL	8	GALVANISED	THAMES
46101964	PARK FARM ROAD	Scunthorpe	488749.12	413451.03	18	7023	00199624	01/04/1982 00:00	4	4	LESS THAN 30MPH	BACK OF FOOTPATH	800	SINGLE ARM	MID GREY	RIGID COLUMN	URBIS	AXIA 2 S1	PETITJEAN	SHEET STEEL	8	PAINTED	THAMES
46101964	PARK FARM ROAD	Scunthorpe	488749.03	413488.01	19	7024	00199625	01/04/1982 00:00	4	4	LESS THAN 30MPH	VERGE	800	SINGLE ARM	MID GREY	RIGID COLUMN	URBIS	AXIA 2 S1	PETITJEAN	SHEET STEEL	8	PAINTED	THAMES
46101964	PARK FARM ROAD	Scunthorpe	488906.51	412964.65	1FP	7000	00199601	01/04/1982 00:00	4	4	LESS THAN 30MPH	VERGE	800	SINGLE ARM	NOT APPLICABLE	RIGID COLUMN	URBIS	AXIA 2 S1	PETITJEAN	SHEET STEEL	8	GALVANISED	THAMES
46101964	PARK FARM ROAD	Scunthorpe	488469.1	414157.3	1YFP	7001	00199602	01/04/1982 00:00	4	4	LESS THAN 30MPH	VERGE	800	SINGLE ARM	NOT APPLICABLE	RIGID COLUMN	URBIS	AXIA 2 S1	PETITJEAN	SHEET STEEL	8	GALVANISED	THAMES
46101964	PARK FARM ROAD	Scunthorpe	488893.34	412981.58	2	7002	00199603	01/04/1982 00:00	4	4	LESS THAN 30MPH	VERGE	800	SINGLE ARM	MID GREY	RIGID COLUMN	URBIS	AXIA 2 S1	PETITJEAN	SHEET STEEL	8	PAINTED	THAMES
46101964	PARK FARM ROAD	Scunthorpe	488740.59	413510.32	20	7025	00199626	01/04/1982 00:00	4	4	LESS THAN 30MPH	VERGE	800	SINGLE ARM	NOT APPLICABLE	RIGID COLUMN	URBIS	AXIA 2 S1	PETITJEAN	SHEET STEEL	8	GALVANISED	THAMES
46101964	PARK FARM ROAD	Scunthorpe	488730.2	413544.8	21	7026	00199627	01/04/1982 00:00	4	4	LESS THAN 30MPH	VERGE	800	SINGLE ARM	NOT APPLICABLE	RIGID COLUMN	URBIS	AXIA 2 S1	PETITJEAN	SHEET STEEL	8	GALVANISED	THAMES
46101964	PARK FARM ROAD	Scunthorpe	488723.14	413572.7	22	7027	00199628	01/04/1982 00:00	4	4	LESS THAN 30MPH	VERGE	800	SINGLE ARM	NOT APPLICABLE	RIGID COLUMN	URBIS	AXIA 2 S1	PETITJEAN	SHEET STEEL	8	GALVANISED	THAMES
46101964	PARK FARM ROAD	Scunthorpe	488718.57	413595.09	23	7028	00199629	01/04/1982 00:00	4	4	LESS THAN 30MPH	VERGE	800	SINGLE ARM	NOT APPLICABLE	RIGID COLUMN	URBIS	AXIA 2 S1	PETITJEAN	SHEET STEEL	8	GALVANISED	THAMES
46101964	PARK FARM ROAD	Scunthorpe	488699.24	413625.41	24	7029	00199630	01/04/1982 00:00	4	4	LESS THAN 30MPH	VERGE	800	SINGLE ARM	NOT APPLICABLE	RIGID COLUMN	URBIS	AXIA 2 S1	PETITJEAN	SHEET STEEL	8	GALVANISED	THAMES
46101964	PARK FARM ROAD	Scunthorpe	488679.08	413648.79	25	7030	00199631	01/04/1982 00:00	4	4	LESS THAN 30MPH	VERGE	800	SINGLE ARM	NOT APPLICABLE	RIGID COLUMN	URBIS	AXIA 2 S1	PETITJEAN	SHEET STEEL	8	GALVANISED	THAMES
46101964	PARK FARM ROAD	Scunthorpe	488655.28	413670.02	26	7031	00199632	01/04/1982 00:00	4	4	LESS THAN 30MPH	VERGE	800	SINGLE ARM	NOT APPLICABLE	RIGID COLUMN	URBIS	AXIA 2 S1	PETITJEAN	SHEET STEEL	8	GALVANISED	THAMES
46101964	PARK FARM ROAD	Scunthorpe	488632.2	413675.7	27	7032	00199633	01/04/1982 00:00	4	4	LESS THAN 30MPH	BACK OF FOOTPATH	800	SINGLE ARM	NOT APPLICABLE	RIGID COLUMN	URBIS	AXIA 2 S1	PETITJEAN	SHEET STEEL	8	GALVANISED	THAMES
46101964	PARK FARM ROAD	Scunthorpe	488608.42	413696.87	28	7033	00199634	01/04/1982 00:00	4	4	LESS THAN 30MPH	BACK OF FOOTPATH	800	SINGLE ARM	NOT APPLICABLE	RIGID COLUMN	URBIS	AXIA 2 S1	PETITJEAN	SHEET STEEL	8	GALVANISED	THAMES
46101964	PARK FARM ROAD	Scunthorpe	488582.85	413722.49	29	7034	00199635	01/04/1982 00:00	4	4	LESS THAN 30MPH	BACK OF FOOTPATH	800	SINGLE ARM	NOT APPLICABLE	RIGID COLUMN	URBIS	AXIA 2 S1	PETITJEAN	SHEET STEEL	8	GALVANISED	THAMES
46101964	PARK FARM ROAD	Scunthorpe	488468.4	414139.8	2Y	7003	00199604	01/04/1982 00:00	4	4	LESS THAN 30MPH	VERGE	800	SINGLE ARM	NOT APPLICABLE	RIGID COLUMN	URBIS	AXIA 2 S1	PETITJEAN	SHEET STEEL	8	GALVANISED	THAMES
46101964	PARK FARM ROAD	Scunthorpe	488865.38	413008.78	3	7004	00199605	01/04/1982 00:00	4	4	LESS THAN 30MPH	VERGE	800	SINGLE ARM	MID GREY	RIGID COLUMN	URBIS	AXIA 2 S1	PETITJEAN	SHEET STEEL	8	PAINTED	THAMES
46101964	PARK FARM ROAD	Scunthorpe	488577.75	413747.22	30	7035	00199636	22/10/2019 00:00	4	4	LESS THAN 30MPH	VERGE	500	SINGLE ARM	NOT APPLICABLE	RIGID COLUMN	URBIS	AXIA 2 S1	MALLATITE	TUBULAR STEEL	8	GALVANISED	TUBULAR
46101964	PARK FARM ROAD	Scunthorpe	488553.02	413771.87	31	7036	00199637	01/04/1982 00:00	4	4	LESS THAN 30MPH	BACK OF FOOTPATH	800	SINGLE ARM	NOT APPLICABLE	RIGID COLUMN	URBIS	AXIA 2 S1	PETITJEAN	SHEET STEEL	8	GALVANISED	THAMES
46101964	PARK FARM ROAD	Scunthorpe	488554.46	413802.56	32	7037	00199638	01/04/1982 00:00	4	4	LESS THAN 30MPH	VERGE	800	SINGLE ARM	NOT APPLICABLE	RIGID COLUMN	URBIS	AXIA 2 S1	PETITJEAN	SHEET STEEL	8	GALVANISED	THAMES
46101964	PARK FARM ROAD	Scunthorpe	488531.57	413834.04	33	7038	00199639	01/04/1982 00:00	4	4	LESS THAN 30MPH	BACK OF FOOTPATH	800	SINGLE ARM	NOT APPLICABLE	RIGID COLUMN	URBIS	AXIA 2 S1	PETITJEAN	SHEET STEEL	8	GALVANISED	THAMES
46101964	PARK FARM ROAD	Scunthorpe	488534.39	413860.18	34	7039	00199640	30/01/2017 00:00	4	4	LESS THAN 30MPH	VERGE	500	SINGLE ARM	NOT APPLICABLE	RIGID COLUMN	URBIS	AXIA 2 S1	MALLATITE	SHEET STEEL	8	GALVANISED	THAMES
46101964	PARK FARM ROAD	Scunthorpe	488514.92	413886.76	35	7040	00199641	01/04/1982 00:00	4	4	LESS THAN 30MPH	BACK OF FOOTPATH	800	SINGLE ARM	NOT APPLICABLE	RIGID COLUMN	URBIS	AXIA 2 S1	PETITJEAN	SHEET STEEL	8	GALVANISED	THAMES
46101964	PARK FARM ROAD	Scunthorpe	488504.77	413917.39	36	7041	00199642	01/04/1982 00:00	4	4	LESS THAN 30MPH	BACK OF FOOTPATH	800	SINGLE ARM	NOT APPLICABLE	RIGID COLU

46101981	QUEENSWAY	Scunthorpe	491536.82	408656.59	126	7145	00199917	01/04/1975 00:00	2	4	BETWEEN 30-50 MPH	BACK OF FOOTPATH	0	POST TOP	MID GREY	RIGID COLUMN	PHILIPS	LUMA 2 17 KLM	PETITJEAN	SHEET STEEL	11	PAINTED	THAMES
46101981	QUEENSWAY	Scunthorpe	491537.17	408635.25	127	7146	00199918	01/04/1975 00:00	2	4	BETWEEN 30-50 MPH	BACK OF FOOTPATH	0	POST TOP	MID GREY	RIGID COLUMN	PHILIPS	LUMA 2 17 KLM	PETITJEAN	SHEET STEEL	11	PAINTED	THAMES
46101981	QUEENSWAY	Scunthorpe	491586.28	408657.14	128	7147	00199919	01/04/1975 00:00	2	4	BETWEEN 30-50 MPH	BACK OF FOOTPATH	0	POST TOP	MID GREY	RIGID COLUMN	PHILIPS	LUMA 2 17 KLM	PETITJEAN	SHEET STEEL	11	PAINTED	THAMES
46101981	QUEENSWAY	Scunthorpe	491584.53	408635.81	129	7148	00199920	01/04/1975 00:00	2	4	BETWEEN 30-50 MPH	BACK OF FOOTPATH	0	POST TOP	MID GREY	RIGID COLUMN	PHILIPS	LUMA 2 17 KLM	PETITJEAN	SHEET STEEL	11	PAINTED	THAMES
46101981	QUEENSWAY	Scunthorpe	489304.7	409986.52	13	7034	00199806	01/04/1975 00:00	2	4	BETWEEN 30-50 MPH	BACK OF FOOTPATH	0	POST TOP	MID GREY	RIGID COLUMN	PHILIPS	LUMA 2 17 KLM	PETITJEAN	SHEET STEEL	11	PAINTED	THAMES
46101981	QUEENSWAY	Scunthorpe	491636.93	408659.16	130	7149	00199921	01/04/1975 00:00	2	4	BETWEEN 30-50 MPH	BACK OF FOOTPATH	0	POST TOP	MID GREY	RIGID COLUMN	PHILIPS	LUMA 2 17 KLM	PETITJEAN	SHEET STEEL	11	PAINTED	THAMES
46101981	QUEENSWAY	Scunthorpe	491636.23	408636.42	131	7150	00199922	01/04/1975 00:00	2	4	BETWEEN 30-50 MPH	BACK OF FOOTPATH	0	POST TOP	MID GREY	RIGID COLUMN	PHILIPS	LUMA 2 17 KLM	PETITJEAN	SHEET STEEL	11	PAINTED	THAMES
46101981	QUEENSWAY	Scunthorpe	491688.48	408658.09	132	7151	00199923	01/04/1975 00:00	2	4	BETWEEN 30-50 MPH	BACK OF FOOTPATH	0	POST TOP	MID GREY	RIGID COLUMN	PHILIPS	LUMA 2 17 KLM	PETITJEAN	SHEET STEEL	11	PAINTED	THAMES
46101981	QUEENSWAY	Scunthorpe	491687.08	408634.31	133	7152	00199924	01/04/1975 00:00	2	4	BETWEEN 30-50 MPH	BACK OF FOOTPATH	0	POST TOP	MID GREY	RIGID COLUMN	PHILIPS	LUMA 2 17 KLM	PETITJEAN	SHEET STEEL	11	PAINTED	THAMES
46101981	QUEENSWAY	Scunthorpe	489299.86	409962.32	14	7035	00199807	01/04/1975 00:00	2	4	BETWEEN 30-50 MPH	BACK OF FOOTPATH	0	POST TOP	MID GREY	RIGID COLUMN	PHILIPS	LUMA 2 17 KLM	PETITJEAN	SHEET STEEL	11	PAINTED	THAMES
46101981	QUEENSWAY	Scunthorpe	489349.33	409975.76	15	7036	00199808	01/04/1975 00:00	2	4	BETWEEN 30-50 MPH	BACK OF FOOTPATH	0	POST TOP	MID GREY	RIGID COLUMN	PHILIPS	LUMA 2 17 KLM	PETITJEAN	SHEET STEEL	11	PAINTED	THAMES
46101981	QUEENSWAY	Scunthorpe	489341.26	409952.11	16	7037	00199809	01/04/1975 00:00	2	4	BETWEEN 30-50 MPH	BACK OF FOOTPATH	0	POST TOP	MID GREY	RIGID COLUMN	PHILIPS	LUMA 2 17 KLM	PETITJEAN	SHEET STEEL	11	PAINTED	THAMES
46101981	QUEENSWAY	Scunthorpe	489395.9	409959.49	17	7038	00199810	01/04/1975 00:00	2	4	BETWEEN 30-50 MPH	BACK OF FOOTPATH	0	POST TOP	MID GREY	RIGID COLUMN	PHILIPS	LUMA 2 17 KLM	PETITJEAN	SHEET STEEL	11	PAINTED	THAMES
46101981	QUEENSWAY	Scunthorpe	489388.38	409936.91	18	7039	00199811	01/04/1975 00:00	2	4	BETWEEN 30-50 MPH	BACK OF FOOTPATH	0	POST TOP	MID GREY	RIGID COLUMN	PHILIPS	LUMA 2 17 KLM	PETITJEAN	SHEET STEEL	11	PAINTED	THAMES
46101981	QUEENSWAY	Scunthorpe	489444.07	409939.75	19	7040	00199812	01/04/1975 00:00	2	4	BETWEEN 30-50 MPH	BACK OF FOOTPATH	0	POST TOP	MID GREY	RIGID COLUMN	PHILIPS	LUMA 2 17 KLM	PETITJEAN	SHEET STEEL	11	PAINTED	THAMES
46101981	QUEENSWAY	Scunthorpe	489169.47	409957.89	2	7023	00199795	01/04/1975 00:00	2	4	LESS THAN 30MPH	SPLITTER ISLAND	1250	SINGLE ARM	LIGHT GREY	RIGID COLUMN	URBIS	AXIA 2 S1	PETITJEAN	SHEET STEEL	12	PAINTED	THAMES
46101981	QUEENSWAY	Scunthorpe	489433.32	409918.25	20	7041	00199813	01/04/1975 00:00	2	4	BETWEEN 30-50 MPH	BACK OF FOOTPATH	0	POST TOP	MID GREY	RIGID COLUMN	PHILIPS	LUMA 2 17 KLM	PETITJEAN	SHEET STEEL	11	PAINTED	THAMES
46101981	QUEENSWAY	Scunthorpe	489487.99	409917.92	21	7042	00199814	01/04/1975 00:00	2	4	BETWEEN 30-50 MPH	BACK OF FOOTPATH	0	POST TOP	MID GREY	RIGID COLUMN	PHILIPS	LUMA 2 17 KLM	PETITJEAN	SHEET STEEL	11	PAINTED	THAMES
46101981	QUEENSWAY	Scunthorpe	489474.55	409896.41	22	7043	00199815	01/04/1975 00:00	2	4	BETWEEN 30-50 MPH	BACK OF FOOTPATH	0	POST TOP	MID GREY	RIGID COLUMN	PHILIPS	LUMA 2 17 KLM	PETITJEAN	SHEET STEEL	11	PAINTED	THAMES
46101981	QUEENSWAY	Scunthorpe	489531	409891.34	23	7044	00199816	01/04/1975 00:00	2	4	BETWEEN 30-50 MPH	BACK OF FOOTPATH	0	POST TOP	MID GREY	RIGID COLUMN	PHILIPS	LUMA 2 17 KLM	PETITJEAN	SHEET STEEL	11	PAINTED	THAMES
46101981	QUEENSWAY	Scunthorpe	489517.02	409871.03	24	7045	00199817	01/04/1975 00:00	2	4	BETWEEN 30-50 MPH	BACK OF FOOTPATH	0	POST TOP	MID GREY	RIGID COLUMN	PHILIPS	LUMA 2 17 KLM	PETITJEAN	SHEET STEEL	11	PAINTED	THAMES
46101981	QUEENSWAY	Scunthorpe	489567.56	409864.45	25	7046	00199818	01/04/1975 00:00	2	4	BETWEEN 30-50 MPH	BACK OF FOOTPATH	0	POST TOP	MID GREY	RIGID COLUMN	PHILIPS	LUMA 2 17 KLM	PETITJEAN	SHEET STEEL	11	PAINTED	THAMES
46101981	QUEENSWAY	Scunthorpe	489551.97	409845.64	26	7047	00199819	01/04/1975 00:00	2	4	BETWEEN 30-50 MPH	BACK OF FOOTPATH	0	POST TOP	MID GREY	RIGID COLUMN	PHILIPS	LUMA 2 17 KLM	PETITJEAN	SHEET STEEL	11	PAINTED	THAMES
46101981	QUEENSWAY	Scunthorpe	489606.56	409831.95	27	7048	00199820	01/04/1975 00:00	2	4	BETWEEN 30-50 MPH	BACK OF FOOTPATH	0	POST TOP	MID GREY	RIGID COLUMN	PHILIPS	LUMA 2 17 KLM	PETITJEAN	SHEET STEEL	11	PAINTED	THAMES
46101981	QUEENSWAY	Scunthorpe	489590.43	409813.67	28	7049	00199821	01/04/1975 00:00	2	4	BETWEEN 30-50 MPH	BACK OF FOOTPATH	0	POST TOP	MID GREY	RIGID COLUMN	PHILIPS	LUMA 2 17 KLM	PETITJEAN	SHEET STEEL	11	PAINTED	THAMES
46101981	QUEENSWAY	Scunthorpe	489646.4	409798.47	29	7050	00199822	01/04/1975 00:00	2	4	BETWEEN 30-50 MPH	BACK OF FOOTPATH	0	POST TOP	MID GREY	RIGID COLUMN	PHILIPS	LUMA 2 17 KLM	PETITJEAN	SHEET STEEL	11	PAINTED	THAMES
46101981	QUEENSWAY	Scunthorpe	489149.58	409968.64	3	7024	00199796	01/04/1975 00:00	2	4	LESS THAN 30MPH	VERGE	1250	SINGLE ARM	LIGHT GREY	RIGID COLUMN	URBIS	AXIA 2 S1	PETITJEAN	SHEET STEEL	12	PAINTED	THAMES
46101981	QUEENSWAY	Scunthorpe	489630.28	409780.19	30	7051	00199823	01/04/1975 00:00	2	4	BETWEEN 30-50 MPH	BACK OF FOOTPATH	0	POST TOP	MID GREY	RIGID COLUMN	PHILIPS	LUMA 2 17 KLM	PETITJEAN	SHEET STEEL	11	PAINTED	THAMES
46101981	QUEENSWAY	Scunthorpe	489680.46	409771.68	31	7052	00199824	01/04/2001 00:00	2	4	BETWEEN 30-50 MPH	BACK OF FOOTPATH	1250	SINGLE ARM	NOT APPLICABLE	RIGID COLUMN	URBIS	AXIA 2 S1	PETITJEAN	SHEET STEEL	10	GALVANISED	THAMES
46101981	QUEENSWAY	Scunthorpe	489663.8	409752.86	32	7053	00199825	01/04/2001 00:00	2	4	BETWEEN 30-50 MPH	VERGE	1250	SINGLE ARM	NOT APPLICABLE	RIGID COLUMN	URBIS	AXIA 2 S1	PETITJEAN	SHEET STEEL	10	GALVANISED	THAMES
46101981	QUEENSWAY	Scunthorpe	489699.82	409755.01	33	7054	00199826	01/04/2001 00:00	2	4	BETWEEN 30-50 MPH	BACK OF FOOTPATH	1250	SINGLE ARM	NOT APPLICABLE	RIGID COLUMN	URBIS	AXIA 2 S1	PETITJEAN	SHEET STEEL	10	GALVANISED	THAMES
46101981	QUEENSWAY	Scunthorpe	489690.14	409729.75	34	7055	00199827	01/04/2001 00:00	2	4	BETWEEN 30-50 MPH	BACK OF FOOTPATH	1250	SINGLE ARM	NOT APPLICABLE	RIGID COLUMN	URBIS	AXIA 2 S1	PETITJEAN	SHEET STEEL	10	GALVANISED	THAMES
46101981	QUEENSWAY	Scunthorpe	489724.01	409737.81	35	7056	00199828	01/04/2001 00:00	2	4	BETWEEN 30-50 MPH	BACK OF FOOTPATH	1250	SINGLE ARM	NOT APPLICABLE	RIGID COLUMN	URBIS	AXIA 2 S1	PETITJEAN	SHEET STEEL	10	GALVANISED	THAMES
46101981	QUEENSWAY	Scunthorpe	489704.66	409716.31	36	7057	00199829	01/04/2001 00:00	2	4	BETWEEN 30-50 MPH	BACK OF FOOTPATH	1250	SINGLE ARM	NOT APPLICABLE	RIGID COLUMN	URBIS	AXIA 2 S1	PETITJEAN	SHEET STEEL	10	GALVANISED	THAMES
46101981	QUEENSWAY	Scunthorpe	489723.47	409701.25	37	7058	00199830	01/04/2001 00:00	2	4	BETWEEN 30-50 MPH	BACK OF FOOTPATH	1250	SINGLE ARM	NOT APPLICABLE	RIGID COLUMN	URBIS	AXIA 2 S1	PETITJEAN	SHEET STEEL	10	GALVANISED	THAMES
46101981	QUEENSWAY	Scunthorpe	489767.56	409697.49	38	7059	00199831	01/04/2001 00:00	2	4	BETWEEN 30-50 MPH	BACK OF FOOTPATH	1250	SINGLE ARM	NOT APPLICABLE	RIGID COLUMN	URBIS	AXIA 2 S1	PETITJEAN	SHEET STEEL	10	GALVANISED	THAMES
46101981	QUEENSWAY	Scunthorpe	489750.36	409678.67	39	7060	00199832	01/04/2001 00:00	2	4	BETWEEN 30-50 MPH	VERGE	1250	SINGLE ARM	NOT APPLICABLE	RIGID COLUMN	URBIS	AXIA 2 S1	PETITJEAN	SHEET STEEL	10	GALVANISED	THAMES
46101981	QUEENSWAY	Scunthorpe	489141.51	409988	4	7025	00199797	01/04/1975 00:00	2	4	LESS THAN 30MPH	SPLITTER ISLAND	1000	SINGLE ARM	MID GREY	RIGID COLUMN	URBIS	AXIA 2 S1	PETITJEAN	SHEET STEEL	12	PAINTED	THAMES
46101981	QUEENSWAY	Scunthorpe	489803.71	409666.54	40	7061	00199833	01/04/1975 00:00	2	4	BETWEEN 30-50 MPH	BACK OF FOOTPATH	0	POST TOP	MID GREY	RIGID COLUMN	PHILIPS	LUMA 2 17 KLM	PETITJEAN	SHEET STEEL	11	PAINTED	THAMES
46101981	QUEENSWAY	Scunthorpe	489785.97	409649.34	41	7062	00199834	01/04/1975 00:00	2	4	BETWEEN 30-50 MPH	VERGE	0	POST TOP	MID GREY	RIGID COLUMN	PHILIPS	LUMA 2 17 KLM	PETITJEAN	SHEET STEEL	11	PAINTED	THAMES
46101981	QUEENSWAY	Scunthorpe	489840.32	409634.94	42	7063	00199835	01/04/1975 00:00	2	4	BETWEEN 30-50 MPH	BACK OF FOOTPATH	0	POST TOP	MID GREY	RIGID COLUMN	PHILIPS	LUMA 2 17 KLM	PETITJEAN	SHEET STEEL	11	PAINTED	THAMES
46101981	QUEENSWAY	Scunthorpe	489823.65	409616.66	43	7064	00199836	01/04/1975 00:00	2	4	BETWEEN 30-50 MPH	VERGE	0	POST TOP	MID GREY	RIGID COLUMN	PHILIPS	LUMA 2 17 KLM	PETITJEAN	SHEET STEEL	11	PAINTED	THAMES
46101981	QUEENSWAY	Scunthorpe	489879.9	409600.85	44	7065	00199837	01/04/1975 00:00	2	4	BETWEEN 30-50 MPH	BACK OF FOOTPATH	0	POST TOP	MID GREY	RIGID COLUMN	PHILIPS	LUMA 2 17 KLM	PETITJEAN	SHEET STEEL	11	PAINTED	THAMES
46101981	QUEENSWAY	Scunthorpe	489863.77	409583.64	45	7066	00199838	01/04/1975 00:00	2	4	BETWEEN 30-50 MPH	VERGE	0	POST TOP	MID GREY	RIGID COLUMN	PHILIPS	LUMA 2 17 KLM	PETITJEAN	SHEET STEEL	11	PAINTED	THAMES
46101981	QUEENSWAY	Scunthorpe	489918.61	409568.64	46	7067	00199839	01/04/1975 00:00	2	4	BETWEEN 30-50 MPH	BACK OF FOOTPATH	0	POST TOP	MID GREY	RIGID COLUMN	PHILIPS	LUMA 2 17 KLM	PETITJEAN	SHEET STEEL	11	PAINTED	THAMES
46101981	QUEENSWAY	Scunthorpe	489901.94	409550.85	47	7068	00199840	01/04/1975 00:00	2	4	BETWEEN 30-50 MPH	VERGE	0	POST TOP	MID GREY	RIGID COLUMN	PHILIPS	LUMA 2 17 KLM	PETITJEAN	SHEET STEEL	11	PAINTED	THAMES
46101981	QUEENSWAY	Scunthorpe	489952.48	409538.48	48	7069	00199841	01/04/1975 00:00	2	4	BETWEEN 30-50 MPH	BACK OF FOOTPATH	0	POST TOP	MID GREY	RIGID COLUMN	PHILIPS	LUMA 2 17 KLM	PETITJEAN	SHEET STEEL	11	PAINTED	THAMES
46101981	QUEENSWAY	Scunthorpe	489935.81	409520.74	49	7070	00199842	01/04/1975 00:00	2	4	BETWEEN 30-50 MPH	VERGE	0	POST TOP	MID GREY	RIGID COLUMN	PHILIPS	LUMA 2 17 KLM	PETITJEAN	SHEET STEEL	11	PAINTED	THAMES
46101981	QUEENSWAY	Scunthorpe	489152.8	410013.26	5	7026	00199798	01/04/1975 00:00	2	4	LESS THAN 30MPH	VERGE	1250	SINGLE ARM	LIGHT GREY	RIGID COLUMN	URBIS	AXIA 2 S1	PETITJEAN	SHEET STEEL	12	PAINTED	THAMES
46101981	QUEENSWAY	Scunthorpe	489995.9	409503.88	50	7071	00199843	01/04/1975 00:00	2	4	BETWEEN 30-50 MPH	BACK OF FOOTPATH	0	POST TOP	MID GREY	RIGID COLUMN	PHILIPS	LUMA 2 17 KLM	PETITJEAN	SHEET STEEL	11	PAINTED	THAMES
46101981	QUEENSWAY	Scunthorpe	489977.62	409485.6	51	7072	00199844	01/04/1975 00:00	2	4	BETWEEN 30-50 MPH	VERGE	0	POST TOP	MID GREY	RIGID COLUMN	PHILIPS	LUMA 2 17 KLM	PETITJEAN	SHEET STEEL	11	PAINTED	THAMES
46101981	QUEENSWAY	Scunthorpe	490030.85	409473.24	52	7073	00199845	01/04/1975 00:00	2	4	BETWEEN 30-50 MPH	BACK OF FOOTPATH	0	POST TOP	MID GREY	RIGID COLUMN	PHILIPS	LUMA 2 17 KLM	PETITJEAN	SHEET STEEL	11	PAINTED	THAMES
46101981	QUEENSWAY	Scunthorpe	490014.72	409454.42	53	7074	00199846	01/04/1975 00:00	2	4	BETWEEN 30-50 MPH	VERGE	0	POST TOP	MID GREY	RIGID COLUMN	PHILIPS	LUMA 2 17 KLM	PETITJEAN	SHEET STEEL	11	PAINTED	THAMES
46101981	QUEENSWAY	Scunthorpe	490069.06	409441.41	54	7075	00199847	01/04/1975 00:00	2	4	BETWEEN 30-50 MPH	BACK OF FOOTPATH	0	POST TOP	MID GREY	RIGID COLUMN	PHILIPS	LUMA 2 17 KLM	PETITJEAN	SHEET STEEL	11	PAINTED	THAMES
46101981	QUEENSWAY	Scunthorpe	490052	409421.97	55	7076	00199848	01/04/1975 00:00	2	4	BETWEEN 30-50 MPH	VERGE	0	POST TOP	MID GREY	RIGID COLUMN	PHILIPS	LUMA 2 17 KLM	PETITJEAN	SHEET STEEL	11	PAINTED	THAMES
46101981	QUEENSWAY	Scunthorpe	490108.46	409407.99	56	7077	00199849	01/04/1975 00:00	2	4	BETWEEN 30-50 MPH	BACK OF FOOTPATH	0	POST TOP	MID GREY	RIGID COLUMN	PHILIPS	LUMA 2 17 KLM	PETITJEAN	SHEET STEEL	11	PAINTED	THAMES
46101981	QUEENSWAY	Scunthorpe	490090.71	409390.25	57	7078	00199850	01/04/1975 00:00	2	4	BETWEEN 30-50 MPH	VERGE	0	POST TOP	MID GREY	RIGID COLUMN	PHILIPS	LUMA 2 17 KLM	PETITJEAN	SHEET STEEL	11	PAINTED	THAMES
46101981	QUEENSWAY	Scunthorpe	490143.4	409377.34	58	7079	00199851	01/04/1975 00:00	2	4	BETWEEN 30-50 MPH	BACK OF FOOTPATH	0	POST TOP	MID GREY	RIGID COLUMN	PHILIPS	LUMA 2 17 KLM	PETITJEAN	SHEET STEEL	11	PAINTED	THAMES
46101981	QUEENSWAY	Scunthorpe	490127.27	409359.06	59	7080	00199852	01/04/1975 00:00	2	4	BETWEEN 30-50 MPH	VERGE	0	POST TOP	MID GREY	RIGID COLUMN	PHILIPS	LUMA 2 17 KLM	PETITJEAN	SHEET STEEL	11	PAINTED	THAMES
46101981	QUEENSWAY	Scunthorpe	489173.77	410019.72	6	7027	00199799	01/04/1975 00:00	2	4	LESS THAN 30MPH	CENTRAL RESERVATION	1250	SINGLE ARM	LIGHT GREY	RIGID COLUMN	URBIS	AXIA 2 S1	PETITJEAN	SHEET STEEL	12	PAINTED	THAMES
46101981	QUEENSWAY	Scunthorpe	490185.43	409342.06	60	7081	00199853	01/04/1975 00:00	2	4	BETWEEN 30-50 MPH	BACK OF FOOTPATH	0	POST TOP	MID GREY	RIGID COLUMN	PHILIPS	LUMA 2 17 KLM	PETITJEAN	SHEET STEEL	11	PAINTED	THAMES
46101981	QUEENSWAY	Scunthorpe	490170.37	409322.7	61	7082	00199854	01/04/1975 00:00	2	4	BETWEEN 30-50 MPH	VERGE	0	POST TOP	MID GREY	RIGID COLUMN	PHILIPS	LUMA 2 17 KLM	PETITJEAN	SHEET STEEL	11	PAINTED	THAMES
46101981	QUEENSWAY	Scunthorpe	490223.06	409309.8	62	7083	00199855	01/04/1975 00:00	2	4	BETWEEN 30-50 MPH	BACK OF FOOTPATH	0	POST TOP	MID GREY	RIGID COLUMN	PHILIPS	LUMA 2 17 KLM	PETITJEAN	SHEET STEEL	11	PAINTED	THAMES
46101981	QUEENSWAY	Scunthorpe	490205.86	409292.06	63	7084	00199856	01/04/1975 00:00	2	4	BETWEEN 30-50 MPH	VERGE	0	POST TOP	MID GREY	RIGID COLUMN	PHILIPS	LUMA 2 17 KLM	PETITJEAN	SHEET STEEL	11	PAINTED	THAMES
46101981	QUEENSWAY	Scunthorpe	490261.23	409277.01	64	7085	00199857	01/04/1975 00:00	2	4	BETWEEN 30-50 MPH	BACK OF FOOTPATH	0	POST TOP	MID GREY	RIGID COLUMN	PHILIPS	LUMA 2 17 KLM	PETITJEAN	SHEET STEEL	11	PAINTED	THAMES
46101981	QUEENSWAY	Scunthorpe	490245.1	409259.8	65	7086	00199858	01/04/1975 00:00	2	4	BETWEEN 30-50 MPH	VERGE	0	POST TOP	MID GREY	RIGID COLUMN	PHILIPS	LUMA 2 17 KLM	PETITJEAN	SHEET STEEL	11	PAINTED	THAMES
46101981	QUEENSWAY	Scunthorpe	490299.4	409244.75	66	7087	00199859	01/04/1975 00:00	2	4	BETWEEN 30-50 MPH	BACK OF FOOTPATH	0	POST TOP	MID GREY	RIGID COLUMN	PHILIPS	LUMA 2 17 KLM	PETITJEAN	SHEET STEEL	11	PAINTED	THAMES
46101981	QUEENSWAY	Scunthorpe	490280.59	409230.23	67	7088	00199860	01/04/1975 00:00	2	4	BETWEEN 30-50 MPH	VERGE	0	POST TOP	MID GREY	RIGID COLUMN	PHILIPS	LUMA 2 17 KLM	PETITJEAN	SHEET STEEL	11	PAINTED	THAMES
46101981	QUEENSWAY	Scunthorpe	490335.07	409215.45	68	7089	00199861	01/04/1975 00:00	2	4	BETWEEN 30-50 MPH	BACK OF FOOTPATH	0	POST TOP	MID GREY	RIGID COLUMN	PHILIPS	LUMA 2 17 KLM	PETITJEAN	SHEET STEEL	11	PAINTED	THAMES
46101981	QUEENSWAY	Scunthorpe	490318.4	409197.17	69	7090	00199862	01/04/1975 00:00	2	4	BETWEEN 30-50 MPH	VERGE	0	POST TOP	MID GREY	RIGID COLUMN	PHILIPS	LUMA 2 17 KLM	PETITJEAN	SHEET STEEL	11	PAINTED	THAMES
46101981	QUEENSWAY	Scunthorpe	489194.2	410010.58	7	7028	00199800	01/04/1975 00:00	2	4	LESS THAN 30MPH	VERGE	1250	SINGLE ARM	LIGHT GREY	RIGID COLUMN	URBIS	AXIA 2 S1	PETITJEAN	SHEET STEEL	12	PAINTED	THAMES
46101981	QUEENSWAY	Scunthorpe	490375.7	409179.94	70	7091	00199863	01/04/1975 00:00	2	4	BETWEEN 30-50 MPH	BACK OF FOOTPATH	0	POST TOP	MID GREY	RIGID COLUMN	PHILIPS	LUMA 2 17 KLM	PETITJEAN	SHEET STEEL	11	PAINTED	THAMES
46101981	QUEENSWAY	Scunthorpe	490360.1	409161.66	71	7092	00199864	01/04/1975 00:00	2	4	BETWEEN 30-50 MPH	VERGE	0	POST TOP	MID GREY	RIGID COLUMN	PHILIPS	LUMA 2 17 KLM	PETITJEAN	SHEET STEEL	11	PAINTED	THAMES
46101981	QUEENSWAY	Scunthorpe	490414.41	409147.14	72	7093	00199865	01/04/1975 00:00	2	4	BETWEEN 30-50 MPH	BACK OF FOOTPATH	0	POST TOP	MID GREY	RIGID COLUMN	PHILIPS	LUMA 2 17 KLM	PETITJEAN	SHEET STEEL	11	PAINTED	THAMES
46101981	QUEENSWAY	Scunthorpe	490398.28	409128.87	73	7094	00199866	01/04/1975 00:00	2	4	BETWEEN 30-50 MPH	VERGE	0	POST TOP	MID GREY	RIGID COLUMN	PHILIPS	LUMA 2 17 KLM	PETITJEAN	SHEET STEEL	11	PAINTED	THAMES
46101981	QUEENSWAY	Scunthorpe	490451.5	409116.5	74	7095	00199867	01/04/1975 00:00	2	4	BETWEEN 30-50 MPH	BACK OF FOOTPATH	0	POST TOP	MID GREY	RIGID COLUMN	PHILIPS	LUMA 2 17 KLM	PETITJEAN	SHEET STEEL	11	PAINTED	THAMES
46101981	QUEENSWAY	Scunthorpe	490433.76	409098.76	75	7096	00199868	01/04/1975 00:00	2	4	BETWEEN 30-50 MPH	VERGE	0	POST TOP	MID GREY	RIGID COLUMN	PHILIPS	LUMA 2 17 KLM	PETITJEAN	SHEET STEEL	11	PAINTED	THAMES
46101981	QUEENSWAY	Scunthorpe	490488.93	409083.72	76	7097	00199869	01/04/1975 00:00	2	4	BETWEEN 30-50 MPH	BACK OF FOOTPATH	0	POST TOP	MID GREY	RIGID COLUMN	PHILIPS	LUMA 2 17 KLM	PETITJEAN	SHEET STEEL	11	PAINTED	THAMES
46101981	QUEENSWAY	Scunthorpe	490473.34	409066.51	77	7098	00199870	01/04/1975 00:00	2	4	BETWEEN 30-50 MPH	BACK OF FOOTPATH	0	POST TOP	MID GREY	RIGID COLUMN	PHILIPS	LUMA 2 17 KLM	PETITJEAN	SHEET STEEL	11	PAINTED	THAMES
46101981	QUEENSWAY	Scunthorpe	490529.42	409050.76	78	7099	00199871	01/04/1975 00:00	2	4	BETWEEN 30-50 MPH	BACK OF FOOTPATH	0	POST TOP	MID GREY	RIGID COLUMN	PHILIPS	LUMA 2 17 KLM	PETITJEAN	SHEET STEEL	11	PAINTED	THAMES
46101981	QUEENSWAY	Scunthorpe	490512.21	409031.41	79	7100	00199872	01/04/1975 00:00	2	4	BETWEEN 30-50 MPH	BACK OF FOOTPATH	0	POST TOP	MID GREY	RIGID COLUMN	PHILIPS	LUMA 2 17 KLM	PETITJEAN	SHEET STEEL	11	PAINTED	THAMES
46101981	QUEENSWAY	Scunthorpe	490565.98	409019.04	80	7101	00199873	01/04/1975 00:00	2	4	BETWEEN 30-50 MPH	BACK OF FOOTPATH	0	POST TOP	MID GREY	RIGID COLUMN	PHILIPS	LUMA 2 17 KLM	PETITJEAN	SHEET STEEL	11	PAINTED	THAMES
46101981	QUEENSWAY	Scunthorpe	490550.39	409000.23	81	7102	00199874	01/04/1975 00:00	2	4	BETWEEN 30-50 MPH	BACK OF FOOTPATH	0	POST TOP	MID GREY	RIGID COLUMN	PHILIPS	LUMA 2 17 KLM	PETITJEAN	SHEET STEEL	11	PAINTED	THAMES
46101981	QUEENSWAY	Scunthorpe	490604.15	408987.32	82	7103	00199875	01/04/1975 00:00	2	4	BETWEEN 30-50 MPH	BACK OF FOOTPATH	0	POST TOP	MID GREY	RIGID COLUMN	PHILIPS	LUMA 2 17 KLM	PETITJEAN	SHEET STEEL	11	PAINTED	THAMES
46101981	QUEENSWAY	Scunthorpe	490584.26	408972.27	83	7104	00199876	01/04/1975 00:00	2	4	BETWEEN 30-50 MPH	BACK OF FOOTPATH	0	POST TOP	MID GREY	RIGID COLUMN	PHILIPS	LUMA 2 17 KLM	PETITJEAN	SHEET STEEL	11	PAINTED	THAMES
46101981	QUEENSWAY	Scunthorpe	490640.13	408956.74	84	7105	00199877	01/04/1975 00:00	2	4	BETWEEN 30-50 MPH	BACK OF FOOTPATH	0	POST TOP	MID GREY	RIGID COLUMN	PHILIPS	LUMA 2 17 KLM	PETITJEAN	SHEET STEEL	11	PAINTED	THAMES
46101981	QUEENSWAY	Scunthorpe	490621.85	408940.61	85	7106	00199878	01/04/1975 00:00	2	4	BETWEEN 30-50 MPH	BACK OF FOOTPATH	0	POST TOP	MID GREY	RIGID COLUMN	PHILIPS	LUMA 2 17 KLM	PETITJEAN	SHEET STEEL	11	PAINTED	THAMES
46101981	QUEENSWAY	Scunthorpe	490677.09	408925.42	86	7107	00199879	01/04/1975 00:00	2	4	BETWEEN 30-50 MPH	BACK OF FOOTPATH	0	POST TOP	MID GREY	RIGID COLUMN	PHILIPS	LUMA 2 17 KLM	PETITJEAN	SHEET STEEL	11	PAINTED	THAMES
46101981	QUEENSWAY	Scunthorpe	490659.89	408907.14	87	7108	00199880	01/04/1975 00:00	2	4	BETWEEN 30-50 MPH	BACK OF FOOTPATH	0	POST TOP	MID GREY	RIGID COLUMN	PHILIPS	LU

46102000	ROWLAND ROAD	Scunthorpe	489788.78	410771.76	16FP	7015	00200087	24/07/2020 00:00	2	4	LESS THAN 30MPH	BACK OF FOOTPATH	1000	SINGLE ARM	NOT APPLICABLE	RIGID COLUMN	URBIS	AXIA 2 S1	MALLATITE	TUBULAR STEEL	8	GALVANISED	TUBULAR
46102000	ROWLAND ROAD	Scunthorpe	489831.79	410776.42	17	7016	00200088	24/07/2020 00:00	2	4	LESS THAN 30MPH	BACK OF FOOTPATH	1000	SINGLE ARM	NOT APPLICABLE	RIGID COLUMN	URBIS	AXIA 2 S1	MALLATITE	TUBULAR STEEL	8	GALVANISED	TUBULAR
46102000	ROWLAND ROAD	Scunthorpe	489865.8	410765.22	18	7017	00200089	24/07/2020 00:00	2	4	LESS THAN 30MPH	BACK OF FOOTPATH	1000	SINGLE ARM	NOT APPLICABLE	RIGID COLUMN	URBIS	AXIA 2 S1	MALLATITE	TUBULAR STEEL	8	GALVANISED	TUBULAR
46102000	ROWLAND ROAD	Scunthorpe	489893.53	410782.19	19	7018	00200090	12/07/2019 00:00	2	4	LESS THAN 30MPH	BACK OF FOOTPATH	1000	SINGLE ARM	NOT APPLICABLE	RIGID COLUMN	URBIS	AXIA 2 S1	MALLATITE	TUBULAR STEEL	8	GALVANISED	TUBULAR
46102000	ROWLAND ROAD	Scunthorpe	489536	410685.62	1FP	7038	00200110	01/04/1981 00:00	2	4	LESS THAN 30MPH	BACK OF FOOTPATH	1500	SINGLE ARM	NOT APPLICABLE	RIGID COLUMN	URBIS	AXIA 2 S1	PETITJEAN	SHEET STEEL	8	GALVANISED	THAMES
46102000	ROWLAND ROAD	Scunthorpe	489305.31	410623.38	2	7001	00200073	24/07/2020 00:00	2	4	LESS THAN 30MPH	VERGE	1000	SINGLE ARM	NOT APPLICABLE	RIGID COLUMN	URBIS	AXIA 2 S1	MALLATITE	TUBULAR STEEL	8	GALVANISED	TUBULAR
46102000	ROWLAND ROAD	Scunthorpe	489936.84	410773.82	20	7019	00200091	24/07/2020 00:00	2	4	LESS THAN 30MPH	BACK OF FOOTPATH	1000	SINGLE ARM	NOT APPLICABLE	RIGID COLUMN	URBIS	AXIA 2 S1	MALLATITE	TUBULAR STEEL	8	GALVANISED	TUBULAR
46102000	ROWLAND ROAD	Scunthorpe	489970.74	410777.26	21	7020	00200092	24/07/2020 00:00	2	4	LESS THAN 30MPH	BACK OF FOOTPATH	1000	SINGLE ARM	NOT APPLICABLE	RIGID COLUMN	URBIS	AXIA 2 S1	MALLATITE	TUBULAR STEEL	8	GALVANISED	TUBULAR
46102000	ROWLAND ROAD	Scunthorpe	490003.53	410793.3	22	7021	00200093	24/07/2020 00:00	2	4	LESS THAN 30MPH	BACK OF FOOTPATH	1000	SINGLE ARM	NOT APPLICABLE	RIGID COLUMN	URBIS	AXIA 2 S1	MALLATITE	TUBULAR STEEL	8	GALVANISED	TUBULAR
46102000	ROWLAND ROAD	Scunthorpe	490045.3	410797.98	23	7022	00200094	24/07/2020 00:00	2	4	LESS THAN 30MPH	BACK OF FOOTPATH	1000	SINGLE ARM	NOT APPLICABLE	RIGID COLUMN	URBIS	AXIA 2 S1	MALLATITE	TUBULAR STEEL	8	GALVANISED	TUBULAR
46102000	ROWLAND ROAD	Scunthorpe	490076.04	410799.62	24	7023	00200095	12/07/2019 00:00	2	4	LESS THAN 30MPH	BACK OF FOOTPATH	1000	SINGLE ARM	NOT APPLICABLE	RIGID COLUMN	URBIS	AXIA 2 S1	MALLATITE	TUBULAR STEEL	8	GALVANISED	TUBULAR
46102000	ROWLAND ROAD	Scunthorpe	490112.52	410803.91	25	7024	00200096	24/07/2020 00:00	2	4	LESS THAN 30MPH	BACK OF FOOTPATH	1000	SINGLE ARM	NOT APPLICABLE	RIGID COLUMN	URBIS	AXIA 2 S1	MALLATITE	TUBULAR STEEL	8	GALVANISED	TUBULAR
46102000	ROWLAND ROAD	Scunthorpe	490148.68	410793.21	26	7025	00200097	12/07/2019 00:00	2	4	LESS THAN 30MPH	BACK OF FOOTPATH	1000	SINGLE ARM	NOT APPLICABLE	RIGID COLUMN	URBIS	AXIA 2 S1	MALLATITE	TUBULAR STEEL	8	GALVANISED	TUBULAR
46102000	ROWLAND ROAD	Scunthorpe	490181.72	410808.73	27	7026	00200098	24/07/2020 00:00	2	4	LESS THAN 30MPH	BACK OF FOOTPATH	1000	SINGLE ARM	NOT APPLICABLE	RIGID COLUMN	URBIS	AXIA 2 S1	MALLATITE	TUBULAR STEEL	8	GALVANISED	TUBULAR
46102000	ROWLAND ROAD	Scunthorpe	490218.95	410800.29	28	7027	00200099	24/07/2020 00:00	2	4	LESS THAN 30MPH	BACK OF FOOTPATH	1000	SINGLE ARM	NOT APPLICABLE	RIGID COLUMN	URBIS	AXIA 2 S1	MALLATITE	TUBULAR STEEL	8	GALVANISED	TUBULAR
46102000	ROWLAND ROAD	Scunthorpe	490252.96	410815.13	29	7028	00200100	24/07/2020 00:00	2	4	LESS THAN 30MPH	BACK OF FOOTPATH	1000	SINGLE ARM	NOT APPLICABLE	RIGID COLUMN	URBIS	AXIA 2 S1	MALLATITE	TUBULAR STEEL	8	GALVANISED	TUBULAR
46102000	ROWLAND ROAD	Scunthorpe	489496.93	410672.38	2FP	7039	00200111	01/04/1981 00:00	2	4	LESS THAN 30MPH	BACK OF FOOTPATH	1500	SINGLE ARM	NOT APPLICABLE	RIGID COLUMN	URBIS	AXIA 2 S1	PETITJEAN	SHEET STEEL	8	GALVANISED	THAMES
46102000	ROWLAND ROAD	Scunthorpe	489331.45	410645.61	3	7002	00200074	24/07/2020 00:00	2	4	LESS THAN 30MPH	BACK OF FOOTPATH	1000	SINGLE ARM	NOT APPLICABLE	RIGID COLUMN	URBIS	AXIA 2 S1	MALLATITE	TUBULAR STEEL	8	GALVANISED	TUBULAR
46102000	ROWLAND ROAD	Scunthorpe	489523.99	410669.04	3	7040	00200112	01/04/1981 00:00	2	4	LESS THAN 30MPH	BACK OF FOOTPATH	1500	SINGLE ARM	NOT APPLICABLE	RIGID COLUMN	URBIS	AXIA 2 S1	PETITJEAN	SHEET STEEL	8	GALVANISED	THAMES
46102000	ROWLAND ROAD	Scunthorpe	490291.73	410806.27	30	7029	00200101	10/07/2019 00:00	2	4	LESS THAN 30MPH	BACK OF FOOTPATH	0	POST TOP	NOT APPLICABLE	RIGID COLUMN	URBIS	AXIA 2 S1	MALLATITE	TUBULAR STEEL	8	GALVANISED	TUBULAR
46102000	ROWLAND ROAD	Scunthorpe	490336.61	410822.18	31	7030	00200102	24/07/2020 00:00	2	4	LESS THAN 30MPH	BACK OF FOOTPATH	1000	SINGLE ARM	NOT APPLICABLE	RIGID COLUMN	URBIS	AXIA 2 S1	MALLATITE	TUBULAR STEEL	8	GALVANISED	TUBULAR
46102000	ROWLAND ROAD	Scunthorpe	490373.95	410815.75	32	7031	00200103	24/07/2020 00:00	2	4	LESS THAN 30MPH	BACK OF FOOTPATH	1000	SINGLE ARM	NOT APPLICABLE	RIGID COLUMN	URBIS	AXIA 2 S1	MALLATITE	TUBULAR STEEL	8	GALVANISED	TUBULAR
46102000	ROWLAND ROAD	Scunthorpe	490415.26	410829.34	33	7032	00200104	24/07/2020 00:00	2	4	LESS THAN 30MPH	BACK OF FOOTPATH	1000	SINGLE ARM	NOT APPLICABLE	RIGID COLUMN	URBIS	AXIA 2 S1	MALLATITE	TUBULAR STEEL	8	GALVANISED	TUBULAR
46102000	ROWLAND ROAD	Scunthorpe	490458.46	410823.47	34	7033	00200105	24/07/2020 00:00	2	4	LESS THAN 30MPH	BACK OF FOOTPATH	1000	SINGLE ARM	NOT APPLICABLE	RIGID COLUMN	URBIS	AXIA 2 S1	MALLATITE	TUBULAR STEEL	8	GALVANISED	TUBULAR
46102000	ROWLAND ROAD	Scunthorpe	490500.88	410827.49	35	7034	00200106	24/07/2020 00:00	2	4	LESS THAN 30MPH	BACK OF FOOTPATH	1000	SINGLE ARM	NOT APPLICABLE	RIGID COLUMN	URBIS	AXIA 2 S1	MALLATITE	TUBULAR STEEL	8	GALVANISED	TUBULAR
46102000	ROWLAND ROAD	Scunthorpe	490539.39	410843.32	36	7035	00200107	01/04/2010 00:00	2	4	LESS THAN 30MPH	BACK OF FOOTPATH	1000	SINGLE ARM	NOT APPLICABLE	RIGID COLUMN	URBIS	AXIA 2 S1	VALMONT ST	SHEET STEEL	8	GALVANISED	THAMES
46102000	ROWLAND ROAD	Scunthorpe	490574.38	410861.34	37	7036	00200108	24/07/2020 00:00	2	4	LESS THAN 30MPH	BACK OF FOOTPATH	1000	SINGLE ARM	NOT APPLICABLE	RIGID COLUMN	URBIS	AXIA 2 S1	MALLATITE	TUBULAR STEEL	8	GALVANISED	TUBULAR
46102000	ROWLAND ROAD	Scunthorpe	490596.35	410887.22	38	7037	00200109	24/07/2020 00:00	2	4	LESS THAN 30MPH	BACK OF FOOTPATH	1000	SINGLE ARM	NOT APPLICABLE	RIGID COLUMN	URBIS	AXIA 2 S1	MALLATITE	TUBULAR STEEL	8	GALVANISED	TUBULAR
46102000	ROWLAND ROAD	Scunthorpe	489533.65	410652.59	4	7041	00200113	02/04/2021 00:00	2	4	LESS THAN 30MPH	VERGE	500	SINGLE ARM	NOT APPLICABLE	RIGID COLUMN	URBIS	AXIA 2 S1	MALLATITE	TUBULAR STEEL	8	GALVANISED	TUBULAR
46102000	ROWLAND ROAD	Scunthorpe	489363.71	410639.32	4	7003	00200075	24/07/2020 00:00	2	4	LESS THAN 30MPH	VERGE	1000	SINGLE ARM	NOT APPLICABLE	RIGID COLUMN	URBIS	AXIA 2 S1	MALLATITE	TUBULAR STEEL	8	GALVANISED	TUBULAR
46102000	ROWLAND ROAD	Scunthorpe	489395.16	410648.76	5	7004	00200076	24/07/2020 00:00	2	4	LESS THAN 30MPH	BACK OF FOOTPATH	1000	SINGLE ARM	NOT APPLICABLE	RIGID COLUMN	URBIS	AXIA 2 S1	MALLATITE	TUBULAR STEEL	8	GALVANISED	TUBULAR
46102000	ROWLAND ROAD	Scunthorpe	489559.34	410627.7	5	7042	00200114	01/04/1981 00:00	2	4	LESS THAN 30MPH	BACK OF FOOTPATH	1500	SINGLE ARM	NOT APPLICABLE	RIGID COLUMN	URBIS	AXIA 2 S1	PETITJEAN	SHEET STEEL	8	GALVANISED	THAMES
46102000	ROWLAND ROAD	Scunthorpe	489433.13	410673.14	6	7005	00200077	24/07/2020 00:00	2	4	LESS THAN 30MPH	BACK OF FOOTPATH	1000	SINGLE ARM	NOT APPLICABLE	RIGID COLUMN	URBIS	AXIA 2 S1	MALLATITE	TUBULAR STEEL	8	GALVANISED	TUBULAR
46102000	ROWLAND ROAD	Scunthorpe	489542.43	410622.43	6FP	7043	00200115	01/04/1981 00:00	2	4	LESS THAN 30MPH	BACK OF FOOTPATH	1500	SINGLE ARM	NOT APPLICABLE	RIGID COLUMN	URBIS	AXIA 2 S1	PETITJEAN	SHEET STEEL	8	GALVANISED	THAMES
46102000	ROWLAND ROAD	Scunthorpe	489462.55	410669.78	7	7006	00200078	24/07/2020 00:00	2	4	LESS THAN 30MPH	BACK OF FOOTPATH	1000	SINGLE ARM	NOT APPLICABLE	RIGID COLUMN	URBIS	AXIA 2 S1	MALLATITE	TUBULAR STEEL	8	GALVANISED	TUBULAR
46102000	ROWLAND ROAD	Scunthorpe	489486.43	410688.31	8	7007	00200079	24/07/2020 00:00	2	4	LESS THAN 30MPH	VERGE	1000	SINGLE ARM	NOT APPLICABLE	RIGID COLUMN	URBIS	AXIA 2 S1	MALLATITE	TUBULAR STEEL	8	GALVANISED	TUBULAR
46102000	ROWLAND ROAD	Scunthorpe	489518	410705.73	9	7008	00200080	24/07/2020 00:00	2	4	LESS THAN 30MPH	VERGE	1000	SINGLE ARM	NOT APPLICABLE	RIGID COLUMN	URBIS	AXIA 2 S1	MALLATITE	TUBULAR STEEL	8	GALVANISED	TUBULAR
46102002	RUE DE NOZAY	Broughton Parish	496131.47	409433.71	1	7000	00200116	01/04/1990 00:00	1	1	LESS THAN 30MPH	BACK OF FOOTPATH	0	POST TOP	NOT APPLICABLE	RIGID COLUMN	URBIS	AXIA 2 S1	PETITJEAN	SHEET STEEL	5	GALVANISED	NIDD
46102002	RUE DE NOZAY	Broughton Parish	496150.71	409437.03	2	7001	00200117	01/04/1990 00:00	1	1	LESS THAN 30MPH	BACK OF FOOTPATH	0	POST TOP	NOT APPLICABLE	RIGID COLUMN	URBIS	AXIA 2 S1	PETITJEAN	SHEET STEEL	5	GALVANISED	NIDD
46102002	RUE DE NOZAY	Broughton Parish	496181.16	409445.34	3	7002	00200118	01/04/1990 00:00	1	1	LESS THAN 30MPH	BACK OF FOOTPATH	0	POST TOP	NOT APPLICABLE	RIGID COLUMN	URBIS	AXIA 2 S1	PETITJEAN	SHEET STEEL	5	GALVANISED	NIDD
46102002	RUE DE NOZAY	Broughton Parish	496176.21	409469.79	4	7003	00200119	01/04/1990 00:00	1	1	LESS THAN 30MPH	BACK OF FOOTPATH	0	POST TOP	NOT APPLICABLE	RIGID COLUMN	URBIS	AXIA 2 S1	PETITJEAN	SHEET STEEL	5	GALVANISED	NIDD
46102002	RUE DE NOZAY	Broughton Parish	496194.47	409465.68	5	7004	00200120	01/04/1990 00:00	1	1	LESS THAN 30MPH	BACK OF FOOTPATH	0	POST TOP	NOT APPLICABLE	RIGID COLUMN	URBIS	AXIA 2 S1	PETITJEAN	SHEET STEEL	5	GALVANISED	NIDD
46102003	SALISBURY CLOSE	Scunthorpe	487484.07	409417.96	1	7000	00200121	01/04/1995 00:00	5	2	LESS THAN 30MPH	BACK OF FOOTPATH	0	POST TOP	NOT APPLICABLE	RIGID COLUMN	URBIS	AXIA 2 S1	PETITJEAN	SHEET STEEL	6	GALVANISED	NIDD
46102003	SALISBURY CLOSE	Scunthorpe	487501.09	409299.36	10	7009	00200130	01/04/1995 00:00	5	2	NOT ON A ROAD	BACK OF FOOTPATH	0	POST TOP	NOT APPLICABLE	RIGID COLUMN	URBIS	AXIA 2 S1	PETITJEAN	SHEET STEEL	5	GALVANISED	NIDD
46102003	SALISBURY CLOSE	Scunthorpe	487477.34	409298.22	11	7010	00200131	01/04/1995 00:00	5	2	NOT ON A ROAD	BACK OF FOOTPATH	0	POST TOP	NOT APPLICABLE	RIGID COLUMN	URBIS	AXIA 2 S1	PETITJEAN	SHEET STEEL	5	GALVANISED	NIDD
46102003	SALISBURY CLOSE	Scunthorpe	487485.92	409389.74	2	7001	00200122	01/04/1995 00:00	5	2	LESS THAN 30MPH	BACK OF FOOTPATH	0	POST TOP	NOT APPLICABLE	RIGID COLUMN	URBIS	AXIA 2 S1	PETITJEAN	SHEET STEEL	6	GALVANISED	NIDD
46102003	SALISBURY CLOSE	Scunthorpe	487487.53	409359.8	3	7002	00200123	01/04/1995 00:00	5	2	LESS THAN 30MPH	BACK OF FOOTPATH	0	POST TOP	NOT APPLICABLE	RIGID COLUMN	URBIS	AXIA 2 S1	PETITJEAN	SHEET STEEL	6	GALVANISED	NIDD
46102003	SALISBURY CLOSE	Scunthorpe	487491.87	409340.85	4	7003	00200124	01/04/1995 00:00	5	2	LESS THAN 30MPH	BACK OF FOOTPATH	0	POST TOP	NOT APPLICABLE	RIGID COLUMN	URBIS	AXIA 2 S1	PETITJEAN	SHEET STEEL	6	GALVANISED	NIDD
46102003	SALISBURY CLOSE	Scunthorpe	487494.73	409323.11	5	7004	00200125	01/04/1995 00:00	5	2	LESS THAN 30MPH	BACK OF FOOTPATH	0	POST TOP	NOT APPLICABLE	RIGID COLUMN	URBIS	AXIA 2 S1	PETITJEAN	SHEET STEEL	6	GALVANISED	NIDD
46102003	SALISBURY CLOSE	Scunthorpe	487466.86	409313.69	6	7005	00200126	01/04/1995 00:00	5	2	LESS THAN 30MPH	BACK OF FOOTPATH	0	POST TOP	NOT APPLICABLE	RIGID COLUMN	URBIS	AXIA 2 S1	PETITJEAN	SHEET STEEL	6	GALVANISED	NIDD
46102003	SALISBURY CLOSE	Scunthorpe	487472.08	409342.1	7	7006	00200127	01/04/1995 00:00	5	2	LESS THAN 30MPH	BACK OF FOOTPATH	0	POST TOP	NOT APPLICABLE	RIGID COLUMN	URBIS	AXIA 2 S1	PETITJEAN	SHEET STEEL	6	GALVANISED	NIDD
46102004	SANDBEDS LANE	Haxey Parish	475492.78	399459.88	1	7000	00200133	01/04/2001 00:00	6	2	LESS THAN 30MPH	BACK OF FOOTPATH	0	POST TOP	NOT APPLICABLE	RIGID COLUMN	URBIS	AXIA 2 S1	MALLATITE	TUBULAR STEEL	6	GALVANISED	STEPPED TUBULAR
46102004	SANDBEDS LANE	Haxey Parish	475527.56	399456.45	2	7002	00200135	01/04/2001 00:00	6	2	LESS THAN 30MPH	VERGE	0	POST TOP	NOT APPLICABLE	RIGID COLUMN	URBIS	AXIA 2 S1	MALLATITE	TUBULAR STEEL	6	GALVANISED	STEPPED TUBULAR
46102004	SANDBEDS LANE	Haxey Parish	475550.95	399462.36	3	7003	00200136	01/04/2001 00:00	6	2	LESS THAN 30MPH	BACK OF FOOTPATH	0	POST TOP	NOT APPLICABLE	RIGID COLUMN	URBIS	AXIA 2 S1	MALLATITE	TUBULAR STEEL	6	GALVANISED	STEPPED TUBULAR
46102004	SANDBEDS LANE	Haxey Parish	475577.22	399453.52	4	7004	00200137	01/04/2001 00:00	6	2	LESS THAN 30MPH	BACK OF FOOTPATH	0	POST TOP	NOT APPLICABLE	RIGID COLUMN	URBIS	AXIA 2 S1	MALLATITE	TUBULAR STEEL	6	GALVANISED	STEPPED TUBULAR
46102005	SANDFIELD CLOSE	Scunthorpe	487588.2	408249.86	1	7000	00200138	01/04/2013 00:00	3	4	LESS THAN 30MPH	BACK OF FOOTPATH	0	POST TOP	NOT APPLICABLE	RIGID COLUMN	URBIS	AXIA 2 S1	MALLATITE	TUBULAR STEEL	6	GALVANISED	TUBULAR
46102005	SANDFIELD CLOSE	Scunthorpe	487603.21	408268.44	2	7001	00200139	01/04/2013 00:00	3	4	LESS THAN 30MPH	BACK OF FOOTPATH	0	POST TOP	NOT APPLICABLE	RIGID COLUMN	URBIS	AXIA 2 S1	MALLATITE	TUBULAR STEEL	6	GALVANISED	TUBULAR
46102005	SANDFIELD CLOSE	Scunthorpe	487632.71	408263.72	3	7002	00200140	01/04/2013 00:00	3	4	LESS THAN 30MPH	FRONT OF FOOTPATH	0	POST TOP	NOT APPLICABLE	RIGID COLUMN	URBIS	AXIA 2 S1	MALLATITE	TUBULAR STEEL	6	GALVANISED	TUBULAR
46102005	SANDFIELD CLOSE	Scunthorpe	487616.27	408246.92	4	7003	00200141	17/11/2020 00:00	3	4	LESS THAN 30MPH	BACK OF FOOTPATH	0	POST TOP	NOT APPLICABLE	RIGID COLUMN	URBIS	AXIA 2 S1	MALLATITE	TUBULAR STEEL	6	GALVANISED	TUBULAR
46102006	SANDRINGHAM CRESCENT	Bottesford Parish	488808.45	407433.21	1	7000	00200142	01/04/2001 00:00	3	1	LESS THAN 30MPH	VERGE	300	SINGLE ARM	NOT APPLICABLE	RIGID COLUMN	URBIS	AXIA 2 S1	MALLATITE	TUBULAR STEEL	6	GALVANISED	STEPPED TUBULAR
46102006	SANDRINGHAM CRESCENT	Bottesford Parish	488772.35	407429.45	2	7001	00200143	01/04/2001 00:00	3	1	LESS THAN 30MPH	VERGE	300	SINGLE ARM	NOT APPLICABLE	RIGID COLUMN	URBIS	AXIA 2 S1	MALLATITE	TUBULAR STEEL	6	GALVANISED	STEPPED TUBULAR
46102006	SANDRINGHAM CRESCENT	Bottesford Parish	488744.79	407419.38	3	7002	00200144	01/04/2001 00:00	3	1	LESS THAN 30MPH	VERGE	300	SINGLE ARM	NOT APPLICABLE	RIGID COLUMN	URBIS	AXIA 2 S1	MALLATITE	TUBULAR STEEL	6	GALVANISED	STEPPED TUBULAR
46102006	SANDRINGHAM CRESCENT	Bottesford Parish	488718.71	407416.01	4	7003	00200145	01/04/2001 00:00	3	1	LESS THAN 30MPH	VERGE	300	SINGLE ARM	NOT APPLICABLE	RIGID COLUMN	URBIS	AXIA 2 S1	MALLATITE	TUBULAR STEEL	6	GALVANISED	STEPPED TUBULAR
46102006	SANDRINGHAM CRESCENT	Bottesford Parish	488702.85	407414.39	5	7004	00200146	01/04/2001 00:00	3	1	LESS THAN 30MPH	VERGE	300	SINGLE ARM	NOT APPLICABLE	RIGID COLUMN	URBIS	AXIA 2 S1	MALLATITE	TUBULAR STEEL	6	GALVANISED	STEPPED TUBULAR
46102006	SANDRINGHAM CRESCENT	Bottesford Parish	488677.04	407405.25	6	7005	00200147	01/04/2001 00:00	3	1	LESS THAN 30MPH	BACK OF FOOTPATH	300	SINGLE ARM	NOT APPLICABLE	RIGID COLUMN	URBIS	AXIA 2 S1	MALLATITE	TUBULAR STEEL	6	GALVANISED	STEPPED TUBULAR
46102008	SCHOOL LANE	New Holland Parish	508321.33	423888.35	1	7002	00200150	01/04/2001 00:00	4	1	LESS THAN 30MPH	BACK OF FOOTPATH	300	SINGLE ARM	NOT APPLICABLE	RIGID COLUMN	URBIS	AXIA 2 S1	MALLATITE	TUBULAR STEEL	6	GALVANISED	STEPPED TUBULAR
46102008	SCHOOL LANE	New Holland Parish	508291.31	423897.45	2	7003	00200151	01/04/2001 00:00	4	1	LESS THAN 30MPH	BACK OF FOOTPATH	300	SINGLE ARM	NOT APPLICABLE	RIGID COLUMN	URBIS	AXIA 2 S1	MALLATITE	TUBULAR STEEL	6	GALVANISED	STEPPED TUBULAR
46102008	SCHOOL LANE	New Holland Parish	508261.33	423880.21	3	7004	00200152	01/04/2001 00:00	4	1	LESS THAN 30MPH	BACK OF FOOTPATH	300	SINGLE ARM	NOT APPLICABLE	RIGID COLUMN	URBIS	AXIA 2 S1	MALLATITE	TUBULAR STEEL	6	GALVANISED	STEPPED TUBULAR
46102008	SCHOOL LANE	New Holland Parish	508237.22	423876.6	4	7005	00200153	01/04/2001 00:00	4	1	LESS THAN 30MPH	BACK OF FOOTPATH	300	SINGLE ARM	NOT APPLICABLE	RIGID COLUMN	URBIS	AXIA 2 S1	MALLATITE	TUBULAR STEEL	6	GALVANISED	STEPPED TUBULAR
46102008	SCHOOL LANE	New Holland Parish	508208.82	423872.93	5	7000	00200148	01/04/2001 00:00	4	1	LESS THAN 30MPH	BACK OF FOOTPATH	300	SINGLE ARM	NOT APPLICABLE	RIGID COLUMN	URBIS	AXIA 2 S1	MALLATITE	TUBULAR STEEL	6	GALVANISED	STEPPED TUBULAR
46102008	SCHOOL LANE	New Holland Parish	508181.36	423869.34	6	7001	00200149	01/04/2001 00:00	4	1	LESS THAN 30MPH	BACK OF FOOTPATH	300	SINGLE ARM	NOT APPLICABLE	RIGID COLUMN	URBIS	AXIA 2 S1	MALLATITE	TUBULAR STEEL	6	GALVANISED	STEPPED TUBULAR
46102009	SCHOOL LANE	Redbourne Parish	497296.08	399998.84	1	7000	00200154	01/04/1980 00:00	1	1	LESS THAN 30MPH	ON POLE	500	SINGLE ARM	NOT APPLICABLE	POLE MOUNTED	URBIS	AXIA 2 S1	WOODEN PO	WOOD	6	NOT APPLICABI	Not Applicable
46102009	SCHOOL LANE	Redbourne Parish	497344.77	400008.35	2	7001	00200155	01/04/1980 00:00	1	1	LESS THAN 30MPH	ON POLE	500	SINGLE ARM	NOT APPLICABLE	POLE MOUNTED	URBIS	AXIA 2 S1	WOODEN PO	WOOD	6	NOT APPLICABI	Not Applicable
46102009	SCHOOL LANE	Redbourne Parish	497393.99	400021.03	3	7002	00200156	01/04/1980 00:00	1	1	LESS THAN 30MPH	ON POLE	300	SINGLE ARM	NOT APPLICABLE	POLE MOUNTED	URBIS	AXIA 2 S1	WOODEN PO	WOOD	6	NOT APPLICABI	PUDSEY DIAMOND
46102009	SCHOOL LANE	Redbourne Parish	497445.04	400032.81	4	7003	04200601	07/11/2021 00:00	1	1	LESS THAN 30MPH	ON POLE	300	SINGLE ARM	NOT APPLICABLE	POLE MOUNTED	URBIS	AXIA 2 S1	WOODEN PO	WOOD	5	NOT APPLICABI	PUDSEY DIAMOND
46102010	SCHOOL ROAD	South Killingholme Parish	515117.6	416173.3	1	7000	00200157	01/04/1973 00:00	3	1	LESS THAN 30MPH	BACK OF FOOTPATH	1250	SINGLE ARM	LIGHT GREY	RIGID COLUMN	URBIS	AXIA 2 S1	PETITJEAN	SHEET STEEL	6	PAINTED	NIDD
46102010	SCHOOL ROAD	South Killingholme Parish	514827.7	416017.6	10	7009	00200166	01/04/1973 00:00	3	1	LESS THAN 30MPH	BACK OF FOOTPATH	1250	SINGLE ARM	LIGHT GREY	RIGID COLUMN	URBIS	AXIA 2 S1	PETITJEAN	SHEET STEEL	6	PAINTED	NIDD
46102010	SCHOOL ROAD	South Killingholme Parish	514778.6	416007.5	11	7010	00200167	01/04/1973 00:00	3	1	LESS THAN 30MPH	BACK OF FOOTPATH	1250	SINGLE ARM	LIGHT GREY	RIGID COLUMN	URBIS	AXIA 2 S1	PETITJEAN	SHEET STEEL	6	PAINTED	NIDD
46102010	SCHOOL ROAD	South Killingholme Parish	514747	415997	12	7011	00211919	01/04/2017 00:00	3	1	NOT ON A ROAD	VERGE	0	POST TOP	NOT APPLICABLE	MID HINGED	PHILIPS	MINI LUMA 3.8 KL	VALMONT ST	TUBULAR STEEL	6	GALVANISED	TUBULAR
46102010	SCHOOL ROAD	South Killingholme Parish	514704	415976	13	7012	00211920	01/04/2017 00:00	3	1	NOT ON A ROAD	VERGE	0	POST TOP	NOT APPLICABLE	MID HINGED	PHILIPS	MINI LUMA 3.8 KL	VALMONT ST	TUBULAR STEEL	6	GALVANISED	TUBULAR
46102010	SCHOOL ROAD	South Killingholme Parish	515067.9	416171.7	2	7001	00200158	01/04/1973 00:00	3	1	LESS THAN 30MPH	BACK OF FOOTPATH	1250	SINGLE ARM	LIGHT GREY	RIGID COLUMN	URBIS	AXIA 2 S1	PETITJEAN	SHEET STEEL	6	PAINTED	NIDD
46102010	SCHOOL ROAD	South Killingholme Parish	515047.1	416147.9	3	7002	00200159	01/04/1973 00:00	3	1	LESS THAN 30MPH	BACK OF FOOTPATH	1250	SINGLE ARM	LIGHT GREY	RIGID COLUMN	URBIS	AXIA 2 S1	PETITJEAN	SHEET STEEL	6	PAINTED	NIDD
46102010	SCHOOL ROAD	South Killingholme Parish	515033.5	416106.3	4	7003	00200160	01/04/1973 00:00	3	1	LESS THAN 30MPH	BACK OF FOOTPATH	1250	SINGLE ARM	LIGHT GREY	RIGID COLUMN	URBIS	AXIA 2 S1	PETITJEAN	SHEET STEEL	6	PAINTED	NIDD
46102010	SCHOOL ROAD	South Killingholme Parish	514989.87	416101	5	7004	00200161	01/04/1973 00:00	3	1	LESS THAN 30MPH	BACK OF FOOTPATH	1250	SINGLE ARM	LIGHT GREY	RIGID COLUMN	URBIS	AXIA 2 S1	PETITJEAN	SHEET STEEL	6	PAINTED	NIDD
46102010	SCHOOL ROAD	South Killingholme Parish	514963.53	416079.55	6	7005	00200162	01/04/1973 00:00	3	1	LESS THAN 30MPH	BACK OF FOOTPATH	1250	SINGLE ARM	LIGHT GREY	RIGID COLUMN	URBIS	AXIA 2 S1	PETITJEAN	SHEET STEEL	6	PAINTED	NIDD
46102010	SCHOOL ROAD	South Killingholme Parish	514934.3	416066	7	7006	00200163	01/04/1973 00:00

46102014	SCOTTER ROAD SOUTH	Scunthorpe	487376.69	407752.71	139	7017	00200331	01/04/1985 00:00	3	4	BETWEEN 30-50 MPH	VERGE	1500	SINGLE ARM	NOT APPLICABLE	RIGID COLUMN	URBIS	AXIA 2 S1	PETITJEAN	SHEET STEEL	8	GALVANISED	THAMES
46102014	SCOTTER ROAD SOUTH	Scunthorpe	487387.36	407723.06	140	7018	00200332	01/04/1985 00:00	3	4	BETWEEN 30-50 MPH	BACK OF FOOTPATH	1500	SINGLE ARM	NOT APPLICABLE	RIGID COLUMN	URBIS	AXIA 2 S1	PETITJEAN	SHEET STEEL	8	GALVANISED	THAMES
46102014	SCOTTER ROAD SOUTH	Scunthorpe	487377.45	407689.95	141	7019	00200333	01/04/2015 00:00	3	4	BETWEEN 30-50 MPH	VERGE	1000	SINGLE ARM	NOT APPLICABLE	RIGID COLUMN	URBIS	AXIA 2 S1	VALMONT ST	SHEET STEEL	8	GALVANISED	THAMES
46102014	SCOTTER ROAD SOUTH	Scunthorpe	487378.5	407660.59	142	7020	00200334	01/04/2015 00:00	3	4	BETWEEN 30-50 MPH	VERGE	1000	SINGLE ARM	NOT APPLICABLE	RIGID COLUMN	URBIS	AXIA 2 S1	VALMONT ST	SHEET STEEL	8	GALVANISED	THAMES
46102014	SCOTTER ROAD SOUTH	Scunthorpe	487380.57	407623.25	143	7021	00200335	01/04/2015 00:00	3	4	BETWEEN 30-50 MPH	VERGE	1000	SINGLE ARM	NOT APPLICABLE	RIGID COLUMN	URBIS	AXIA 2 S1	VALMONT ST	SHEET STEEL	8	GALVANISED	THAMES
46102014	SCOTTER ROAD SOUTH	Scunthorpe	487385.47	407593.53	144	7022	00200336	01/04/2015 00:00	3	4	BETWEEN 30-50 MPH	VERGE	1000	SINGLE ARM	NOT APPLICABLE	RIGID COLUMN	URBIS	AXIA 2 S1	VALMONT ST	SHEET STEEL	8	GALVANISED	THAMES
46102017	SHAKESPEARE AVENUE	Scunthorpe	487604.94	408876.2	1	7000	00200337	01/04/2008 00:00	5	2	BETWEEN 30-50 MPH	BACK OF FOOTPATH	0	POST TOP	NOT APPLICABLE	RIGID COLUMN	URBIS	AXIA 2 S1	MALLATITE	TUBULAR STEEL	6	GALVANISED	STEPPED TUBULAR
46102017	SHAKESPEARE AVENUE	Scunthorpe	487566.72	408884.04	2	7001	00200338	01/04/2008 00:00	5	2	BETWEEN 30-50 MPH	BACK OF FOOTPATH	0	POST TOP	NOT APPLICABLE	RIGID COLUMN	URBIS	AXIA 2 S1	MALLATITE	TUBULAR STEEL	6	GALVANISED	STEPPED TUBULAR
46102017	SHAKESPEARE AVENUE	Scunthorpe	487543.06	408879.14	3	7002	00200339	01/04/2008 00:00	5	2	BETWEEN 30-50 MPH	BACK OF FOOTPATH	0	POST TOP	NOT APPLICABLE	RIGID COLUMN	URBIS	AXIA 2 S1	MALLATITE	TUBULAR STEEL	6	GALVANISED	STEPPED TUBULAR
46102017	SHAKESPEARE AVENUE	Scunthorpe	487524.44	408881.38	4	7003	00200340	01/04/2008 00:00	5	2	BETWEEN 30-50 MPH	BACK OF FOOTPATH	0	POST TOP	NOT APPLICABLE	RIGID COLUMN	URBIS	AXIA 2 S1	MALLATITE	TUBULAR STEEL	6	GALVANISED	STEPPED TUBULAR
46102017	SHAKESPEARE AVENUE	Scunthorpe	487500.78	408887.96	5	7004	00200341	01/04/2008 00:00	5	2	BETWEEN 30-50 MPH	BACK OF FOOTPATH	0	POST TOP	NOT APPLICABLE	RIGID COLUMN	URBIS	AXIA 2 S1	MALLATITE	TUBULAR STEEL	6	GALVANISED	STEPPED TUBULAR
46102017	SHAKESPEARE AVENUE	Scunthorpe	487500.64	408877.18	6	7005	00200342	01/04/2008 00:00	5	2	BETWEEN 30-50 MPH	BACK OF FOOTPATH	0	POST TOP	NOT APPLICABLE	RIGID COLUMN	URBIS	AXIA 2 S1	MALLATITE	TUBULAR STEEL	6	GALVANISED	STEPPED TUBULAR
46102017	SHAKESPEARE AVENUE	Scunthorpe	487471.52	408881.94	7	7006	00200343	01/04/2008 00:00	5	2	BETWEEN 30-50 MPH	BACK OF FOOTPATH	0	POST TOP	NOT APPLICABLE	RIGID COLUMN	URBIS	AXIA 2 S1	MALLATITE	TUBULAR STEEL	6	GALVANISED	STEPPED TUBULAR
46102017	SHAKESPEARE AVENUE	Scunthorpe	487449.54	408883.34	8	7007	00200344	01/04/2008 00:00	5	2	BETWEEN 30-50 MPH	BACK OF FOOTPATH	0	POST TOP	NOT APPLICABLE	RIGID COLUMN	URBIS	AXIA 2 S1	MALLATITE	TUBULAR STEEL	6	GALVANISED	STEPPED TUBULAR
46102018	SILVER STREET	Barrow upon Humber Parish	506975.55	420958.4	1	7000	00200345	01/04/1973 00:00	4	1	LESS THAN 30MPH	BACK OF FOOTPATH	500	SINGLE ARM	MID GREY	RIGID COLUMN	URBIS	AXIA 2 S1	PETITJEAN	SHEET STEEL	5	PAINTED	DAER
46102018	SILVER STREET	Barrow upon Humber Parish	506939.12	420979.79	2	7001	00200346	01/04/1973 00:00	4	1	LESS THAN 30MPH	BACK OF FOOTPATH	500	SINGLE ARM	MID GREY	RIGID COLUMN	URBIS	AXIA 2 S1	PETITJEAN	SHEET STEEL	5	PAINTED	DAER
46102018	SILVER STREET	Barrow upon Humber Parish	506911.53	420979.58	3	7002	00200347	01/04/1973 00:00	4	1	LESS THAN 30MPH	BACK OF FOOTPATH	500	SINGLE ARM	MID GREY	RIGID COLUMN	URBIS	AXIA 2 S1	PETITJEAN	SHEET STEEL	5	PAINTED	DAER
46102018	SILVER STREET	Barrow upon Humber Parish	506894.83	420938.53	4	7003	00200348	01/04/1973 00:00	4	1	LESS THAN 30MPH	BACK OF FOOTPATH	500	SINGLE ARM	MID GREY	RIGID COLUMN	URBIS	AXIA 2 S1	PETITJEAN	SHEET STEEL	5	PAINTED	DAER
46102018	SILVER STREET	Barrow upon Humber Parish	506866.41	420907.61	5	7004	00200349	01/04/1973 00:00	4	1	LESS THAN 30MPH	BACK OF FOOTPATH	500	SINGLE ARM	MID GREY	RIGID COLUMN	URBIS	AXIA 2 S1	PETITJEAN	SHEET STEEL	5	PAINTED	DAER
46102018	SILVER STREET	Barrow upon Humber Parish	506828.13	420884.75	6	7005	00200350	01/04/1973 00:00	4	1	LESS THAN 30MPH	BACK OF FOOTPATH	500	SINGLE ARM	MID GREY	RIGID COLUMN	URBIS	AXIA 2 S1	PETITJEAN	SHEET STEEL	5	PAINTED	DAER
46102018	SILVER STREET	Barrow upon Humber Parish	506785.21	420875.52	7	7006	00200351	01/04/1973 00:00	4	1	LESS THAN 30MPH	BACK OF FOOTPATH	500	SINGLE ARM	MID GREY	RIGID COLUMN	URBIS	AXIA 2 S1	PETITJEAN	SHEET STEEL	5	PAINTED	DAER
46102018	SILVER STREET	Barrow upon Humber Parish	506744.01	420854.02	8	7007	00200352	01/04/1973 00:00	4	1	LESS THAN 30MPH	BACK OF FOOTPATH	500	SINGLE ARM	MID GREY	RIGID COLUMN	URBIS	AXIA 2 S1	PETITJEAN	SHEET STEEL	5	PAINTED	DAER
46102018	SILVER STREET	Barrow upon Humber Parish	506700.89	420834.78	9	7008	00200353	01/04/1973 00:00	4	1	LESS THAN 30MPH	BACK OF FOOTPATH	500	SINGLE ARM	MID GREY	RIGID COLUMN	URBIS	AXIA 2 S1	PETITJEAN	SHEET STEEL	5	PAINTED	DAER
46102019	SOMERSET DRIVE	Burton upon Stather Parish	487280.63	417790.98	1FP	7000	00200354	12/12/2018 00:00	2	3	LESS THAN 30MPH	BACK OF FOOTPATH	0	POST TOP	NOT APPLICABLE	RIGID COLUMN	URBIS	AXIA 2 S1	MALLATITE	TUBULAR STEEL	6	GALVANISED	TUBULAR
46102019	SOMERSET DRIVE	Burton upon Stather Parish	487295.15	417760.94	2	7001	00200355	01/06/2018 00:00	2	3	LESS THAN 30MPH	BACK OF FOOTPATH	0	POST TOP	NOT APPLICABLE	RIGID COLUMN	URBIS	AXIA 2 S1	VALMONT ST	TUBULAR STEEL	6	GALVANISED	TUBULAR
46102019	SOMERSET DRIVE	Burton upon Stather Parish	487294.75	417729.32	3	7002	00200356	01/04/2008 00:00	2	3	LESS THAN 30MPH	VERGE	0	POST TOP	NOT APPLICABLE	RIGID COLUMN	URBIS	PILZEO 16 LED 3.19 KLM	BRITISH STEE	TUBULAR STEEL	6	GALVANISED	ASH
46102020	SOUTERGATE	Barton upon Humber Parish	503264.9	422107.65	1	7000	00200357	21/01/2022 00:00	5	2	LESS THAN 30MPH	BACK OF FOOTPATH	0	POST TOP	NOT APPLICABLE	RIGID COLUMN	URBIS	AXIA 2 S1	MALLATITE	TUBULAR STEEL	6	GALVANISED	TUBULAR
46102020	SOUTERGATE	Barton upon Humber Parish	503294.04	422095.85	2	7001	00200358	06/06/2019 00:00	5	2	LESS THAN 30MPH	BACK OF FOOTPATH	0	POST TOP	NOT APPLICABLE	RIGID COLUMN	URBIS	AXIA 2 S1	MALLATITE	TUBULAR STEEL	6	GALVANISED	TUBULAR
46102020	SOUTERGATE	Barton upon Humber Parish	503331.84	422083.49	3	7002	00200359	06/06/2019 00:00	5	2	LESS THAN 30MPH	BACK OF FOOTPATH	0	POST TOP	NOT APPLICABLE	RIGID COLUMN	URBIS	AXIA 2 S1	MALLATITE	TUBULAR STEEL	6	GALVANISED	TUBULAR
46102020	SOUTERGATE	Barton upon Humber Parish	503366.57	422078.02	4	7003	00200360	01/04/2008 00:00	5	2	LESS THAN 30MPH	BACK OF FOOTPATH	0	POST TOP	NOT APPLICABLE	RIGID COLUMN	URBIS	AXIA 2 S1	BRITISH STEE	TUBULAR STEEL	6	GALVANISED	ASH
46102020	SOUTERGATE	Barton upon Humber Parish	503378.12	422055.56	5	7004	00200361	06/06/2019 00:00	5	2	LESS THAN 30MPH	BACK OF FOOTPATH	0	POST TOP	NOT APPLICABLE	RIGID COLUMN	URBIS	AXIA 2 S1	MALLATITE	TUBULAR STEEL	6	GALVANISED	TUBULAR
46102020	SOUTERGATE	Barton upon Humber Parish	503388.07	422029.25	6	7005	00200362	06/06/2019 00:00	5	2	LESS THAN 30MPH	BACK OF FOOTPATH	0	POST TOP	NOT APPLICABLE	RIGID COLUMN	URBIS	AXIA 2 S1	MALLATITE	TUBULAR STEEL	6	GALVANISED	TUBULAR
46102020	SOUTERGATE	Barton upon Humber Parish	503385.82	422012.88	7	7006	00200363	01/04/1992 00:00	5	2	LESS THAN 30MPH	VERGE	300	SINGLE ARM	BLACK	RIGID COLUMN	URBIS	ALBANY	FABRIKAT	TUBULAR STEEL	6	PAINTED	STEPPED TUBULAR
46102022	SOUTH DALE CLOSE	Kirton in Lindsey Parish	493110.3	399034.88	1	7000	00200364	14/01/2019 00:00	1	3	LESS THAN 30MPH	BACK OF FOOTPATH	0	POST TOP	NOT APPLICABLE	RIGID COLUMN	URBIS	AXIA 2 S1	MALLATITE	TUBULAR STEEL	6	GALVANISED	TUBULAR
46102022	SOUTH DALE CLOSE	Kirton in Lindsey Parish	493081.6	399007.39	2	7001	00200365	14/01/2019 00:00	1	3	LESS THAN 30MPH	BACK OF FOOTPATH	0	POST TOP	NOT APPLICABLE	RIGID COLUMN	URBIS	AXIA 2 S1	MALLATITE	TUBULAR STEEL	6	GALVANISED	TUBULAR
46102022	SOUTH DALE CLOSE	Kirton in Lindsey Parish	493092.09	398980.25	3	7002	00200366	30/04/2021 00:00	1	3	LESS THAN 30MPH	VERGE	0	POST TOP	NOT APPLICABLE	RIGID COLUMN	URBIS	PILZEO 16 LED 3.19 KLM	MALLATITE	TUBULAR STEEL	5	GALVANISED	TUBULAR
46102023	SOUTH RIDGE CRESCENT	Bottesford Parish	488546.76	407283.74	1	7000	00200367	01/04/1980 00:00	3	1	LESS THAN 30MPH	VERGE	300	SINGLE ARM	NOT APPLICABLE	RIGID COLUMN	URBIS	AXIA 2 S1	PETITJEAN	SHEET STEEL	5	GALVANISED	DAER
46102023	SOUTH RIDGE CRESCENT	Bottesford Parish	488552.79	407251.27	2	7001	00200368	11/09/2019 00:00	3	1	LESS THAN 30MPH	VERGE	0	POST TOP	NOT APPLICABLE	RIGID COLUMN	URBIS	AXIA 2 S1	MALLATITE	TUBULAR STEEL	6	GALVANISED	TUBULAR
46102023	SOUTH RIDGE CRESCENT	Bottesford Parish	488549.15	407228.26	3	7002	00200369	11/09/2019 00:00	3	1	LESS THAN 30MPH	VERGE	0	POST TOP	NOT APPLICABLE	RIGID COLUMN	URBIS	AXIA 2 S1	MALLATITE	TUBULAR STEEL	6	GALVANISED	TUBULAR
46102023	SOUTH RIDGE CRESCENT	Bottesford Parish	488548.07	407196.1	4	7003	00200370	11/09/2019 00:00	3	1	LESS THAN 30MPH	VERGE	0	POST TOP	NOT APPLICABLE	RIGID COLUMN	URBIS	AXIA 2 S1	MALLATITE	TUBULAR STEEL	6	GALVANISED	TUBULAR
46102023	SOUTH RIDGE CRESCENT	Bottesford Parish	488530.9	407175.11	5	7004	00200371	01/04/1980 00:00	3	1	LESS THAN 30MPH	BACK OF FOOTPATH	300	SINGLE ARM	NOT APPLICABLE	RIGID COLUMN	URBIS	AXIA 2 S1	PETITJEAN	SHEET STEEL	5	GALVANISED	DAER
46102023	SOUTH RIDGE CRESCENT	Bottesford Parish	488530.14	407207.16	6	7005	00200372	11/09/2019 00:00	3	1	LESS THAN 30MPH	BACK OF FOOTPATH	0	POST TOP	NOT APPLICABLE	RIGID COLUMN	URBIS	AXIA 2 S1	MALLATITE	TUBULAR STEEL	6	GALVANISED	TUBULAR
46102024	SOUTHFIELD CLOSE	Belton Parish	478138.8	406194.2	1	7000	00200373	20/09/2018 00:00	5	3	LESS THAN 30MPH	BACK OF FOOTPATH	0	POST TOP	NOT APPLICABLE	RIGID COLUMN	URBIS	AXIA 2 S1	MALLATITE	TUBULAR STEEL	6	GALVANISED	TUBULAR
46102024	SOUTHFIELD CLOSE	Belton Parish	478138.88	406168.03	2	7001	00200374	20/09/2018 00:00	5	3	LESS THAN 30MPH	BACK OF FOOTPATH	0	POST TOP	NOT APPLICABLE	RIGID COLUMN	URBIS	AXIA 2 S1	MALLATITE	TUBULAR STEEL	6	GALVANISED	TUBULAR
46102024	SOUTHFIELD CLOSE	Belton Parish	478110.12	406151.1	3	7002	00200375	01/04/2008 00:00	5	3	LESS THAN 30MPH	BACK OF FOOTPATH	0	POST TOP	NOT APPLICABLE	RIGID COLUMN	URBIS	AXIA 2 S1	BRITISH STEE	TUBULAR STEEL	6	GALVANISED	ASH
46102025	SOUTHFIELD ROAD	Scunthorpe	490326.53	408283.88	1	7000	00200376	10/04/2017 00:00	1	3	LESS THAN 30MPH	BACK OF FOOTPATH	0	POST TOP	NOT APPLICABLE	RIGID COLUMN	HOLOPHANE	VMAX V1 L044 LED	VALMONT ST	TUBULAR STEEL	6	GALVANISED	TUBULAR
46102025	SOUTHFIELD ROAD	Scunthorpe	490463.86	408179.19	10	7009	00200385	01/04/1995 00:00	1	3	LESS THAN 30MPH	BACK OF FOOTPATH	0	POST TOP	NOT APPLICABLE	RIGID COLUMN	URBIS	AXIA 2 S1	T AND L	TUBULAR STEEL	5	GALVANISED	STEPPED TUBULAR
46102025	SOUTHFIELD ROAD	Scunthorpe	490470.2	408206.77	11	7010	00200386	01/04/1995 00:00	1	3	LESS THAN 30MPH	BACK OF FOOTPATH	0	POST TOP	NOT APPLICABLE	RIGID COLUMN	URBIS	AXIA 2 S1	T AND L	TUBULAR STEEL	5	GALVANISED	STEPPED TUBULAR
46102025	SOUTHFIELD ROAD	Scunthorpe	490458.85	408229.71	12	7011	00200387	01/04/1995 00:00	1	3	LESS THAN 30MPH	BACK OF FOOTPATH	0	POST TOP	NOT APPLICABLE	RIGID COLUMN	URBIS	AXIA 2 S1	T AND L	TUBULAR STEEL	5	GALVANISED	STEPPED TUBULAR
46102025	SOUTHFIELD ROAD	Scunthorpe	490478.3	408174.32	13	7012	00200388	10/04/2017 00:00	1	3	LESS THAN 30MPH	BACK OF FOOTPATH	0	POST TOP	NOT APPLICABLE	RIGID COLUMN	HOLOPHANE	VMAX V1 L044 LED	VALMONT ST	TUBULAR STEEL	6	GALVANISED	TUBULAR
46102025	SOUTHFIELD ROAD	Scunthorpe	490517.77	408172.44	14	7013	00200389	01/04/2013 00:00	1	3	LESS THAN 30MPH	BACK OF FOOTPATH	0	POST TOP	NOT APPLICABLE	RIGID COLUMN	HOLOPHANE	VMAX V1 L044 LED	MALLATITE	TUBULAR STEEL	6	GALVANISED	TUBULAR
46102025	SOUTHFIELD ROAD	Scunthorpe	490554.89	408181.93	15	7014	00200390	01/04/2013 00:00	1	3	LESS THAN 30MPH	BACK OF FOOTPATH	0	POST TOP	NOT APPLICABLE	RIGID COLUMN	HOLOPHANE	VMAX V1 L044 LED	MALLATITE	TUBULAR STEEL	6	GALVANISED	TUBULAR
46102025	SOUTHFIELD ROAD	Scunthorpe	490596.07	408178.96	16	7015	00200391	01/04/2010 00:00	1	3	LESS THAN 30MPH	BACK OF FOOTPATH	0	POST TOP	NOT APPLICABLE	RIGID COLUMN	HOLOPHANE	VMAX V1 L044 LED	VALMONT ST	TUBULAR STEEL	6	GALVANISED	TUBULAR
46102025	SOUTHFIELD ROAD	Scunthorpe	490324.13	408248.23	2	7001	00200377	03/04/2017 00:00	1	3	LESS THAN 30MPH	BACK OF FOOTPATH	0	POST TOP	NOT APPLICABLE	RIGID COLUMN	HOLOPHANE	VMAX V1 L044 LED	VALMONT ST	TUBULAR STEEL	6	GALVANISED	TUBULAR
46102025	SOUTHFIELD ROAD	Scunthorpe	490333.5	408208.83	3	7002	00200378	10/04/2017 00:00	1	3	LESS THAN 30MPH	BACK OF FOOTPATH	0	POST TOP	NOT APPLICABLE	RIGID COLUMN	HOLOPHANE	VMAX V1 L044 LED	VALMONT ST	TUBULAR STEEL	6	GALVANISED	TUBULAR
46102025	SOUTHFIELD ROAD	Scunthorpe	490329.14	408178.03	4	7003	00200379	10/04/2017 00:00	1	3	LESS THAN 30MPH	BACK OF FOOTPATH	0	POST TOP	NOT APPLICABLE	RIGID COLUMN	HOLOPHANE	VMAX V1 L044 LED	VALMONT ST	TUBULAR STEEL	6	GALVANISED	TUBULAR
46102025	SOUTHFIELD ROAD	Scunthorpe	490336.42	408150.62	5	7004	00200380	10/04/2017 00:00	1	3	LESS THAN 30MPH	BACK OF FOOTPATH	0	POST TOP	NOT APPLICABLE	RIGID COLUMN	HOLOPHANE	VMAX V1 L044 LED	VALMONT ST	TUBULAR STEEL	6	GALVANISED	TUBULAR
46102025	SOUTHFIELD ROAD	Scunthorpe	490343.24	408135.63	6	7005	00200381	10/04/2017 00:00	1	3	LESS THAN 30MPH	BACK OF FOOTPATH	0	POST TOP	NOT APPLICABLE	RIGID COLUMN	HOLOPHANE	VMAX V1 L044 LED	VALMONT ST	TUBULAR STEEL	6	GALVANISED	TUBULAR
46102025	SOUTHFIELD ROAD	Scunthorpe	490372.93	408140.9	7	7006	00200382	10/04/2017 00:00	1	3	LESS THAN 30MPH	BACK OF PATH	0	POST TOP	NOT APPLICABLE	RIGID COLUMN	HOLOPHANE	VMAX V1 L044 LED	VALMONT ST	TUBULAR STEEL	6	GALVANISED	TUBULAR
46102025	SOUTHFIELD ROAD	Scunthorpe	490404.95	408155.26	8	7007	00200383	10/04/2017 00:00	1	3	LESS THAN 30MPH	BACK OF FOOTPATH	0	POST TOP	NOT APPLICABLE	RIGID COLUMN	HOLOPHANE	VMAX V1 L044 LED	VALMONT ST	TUBULAR STEEL	6	GALVANISED	TUBULAR
46102025	SOUTHFIELD ROAD	Scunthorpe	490441.49	408170.34	9	7008	00200384	10/04/2017 00:00	1	3	LESS THAN 30MPH	BACK OF FOOTPATH	0	POST TOP	NOT APPLICABLE	RIGID COLUMN	HOLOPHANE	VMAX V1 L044 LED	VALMONT ST	TUBULAR STEEL	6	GALVANISED	TUBULAR
46102026	ST ANDREWS AVENUE	Bottesford Parish	488934.3	406707.92	1	7000	00200392	10/10/2019 00:00	3	1	LESS THAN 30MPH	FRONT OF FOOTPATH	0	POST TOP	NOT APPLICABLE	RIGID COLUMN	URBIS	AXIA 2 S1	MALLATITE	TUBULAR STEEL	6	GALVANISED	TUBULAR
46102026	ST ANDREWS AVENUE	Bottesford Parish	488964.24	406720.48	2	7001	00200393	10/10/2019 00:00	3	1	LESS THAN 30MPH	VERGE	0	POST TOP	NOT APPLICABLE	RIGID COLUMN	URBIS	PILZEO 16 LED 3.19 KLM	MALLATITE	TUBULAR STEEL	6	GALVANISED	TUBULAR
46102027	SPRINGBANK	Brigg Parish	500158.05	408010.9	1	7000	00200394	01/04/1993 00:00	2	3	LESS THAN 30MPH	BACK OF FOOTPATH	800	SINGLE ARM	NOT APPLICABLE	RIGID COLUMN	URBIS	AXIA 2 S1	PETITJEAN	SHEET STEEL	6	GALVANISED	DAER
46102027	SPRINGBANK	Brigg Parish	500319.77	408079.77	10	7009	00200403	01/04/1993 00:00	2	3	LESS THAN 30MPH	BACK OF FOOTPATH	800	SINGLE ARM	NOT APPLICABLE	RIGID COLUMN	URBIS	AXIA 2 S1	PETITJEAN	SHEET STEEL	6	GALVANISED	DAER
46102027	SPRINGBANK	Brigg Parish	500342.14	408075.18	11	7010	00200404	01/04/1993 00:00	2	3	LESS THAN 30MPH	BACK OF FOOTPATH	800	SINGLE ARM	NOT APPLICABLE	RIGID COLUMN	URBIS	AXIA 2 S1	PETITJEAN	SHEET STEEL	6	GALVANISED	DAER
46102027	SPRINGBANK	Brigg Parish	500359.69	408093	12	7011	00200405	01/04/1993 00:00	2	3	LESS THAN 30MPH	BACK OF FOOTPATH	800	SINGLE ARM	NOT APPLICABLE	RIGID COLUMN	URBIS	AXIA 2 S1	PETITJEAN	SHEET STEEL	6	GALVANISED	DAER
46102027	SPRINGBANK	Brigg Parish	500384.82	408089.94	13	7012	00200406	01/04/1993 00:00	2	3	LESS THAN 30MPH	BACK OF FOOTPATH	800	SINGLE ARM	NOT APPLICABLE	RIGID COLUMN	URBIS	AXIA 2 S1	PETITJEAN	SHEET STEEL	6	GALVANISED	DAER
46102027	SPRINGBANK	Brigg Parish	500398.78	408104.99	14	7013	00200407	01/04/1993 00:00	2	3	LESS THAN 30MPH	BACK OF FOOTPATH	800	SINGLE ARM	NOT APPLICABLE	RIGID COLUMN	URBIS	AXIA 2 S1	PETITJEAN	SHEET STEEL	6	GALVANISED	DAER
46102027	SPRINGBANK	Brigg Parish	500157.39	408034.39	2	7001	00200395	01/04/1993 00:00	2	3	LESS THAN 30MPH	BACK OF FOOTPATH	800	SINGLE ARM	NOT APPLICABLE	RIGID COLUMN	URBIS	AXIA 2 S1	PETITJEAN	SHEET STEEL	6	GALVANISED	DAER
46102027	SPRINGBANK	Brigg Parish	500174.55	408032.86	3	7002	00200396	01/04/1993 00:00	2	3	LESS THAN 30MPH	BACK OF FOOTPATH	800	SINGLE ARM	NOT APPLICABLE	RIGID COLUMN	URBIS	AXIA 2 S1	PETITJEAN	SHEET STEEL	6	GALVANISED	DAER
46102027	SPRINGBANK	Brigg Parish	500194.23	408039.31	4	7003	00200397	01/04/1993 00:00	2	3	LESS THAN 30MPH	BACK OF FOOTPATH	800	SINGLE ARM	NOT APPLICABLE	RIGID COLUMN	URBIS	AXIA 2 S1	PETITJEAN	SHEET STEEL	6	GALVANISED	DAER
46102027	SPRINGBANK	Brigg Parish	500218.12	408035.32	5	7004	00200398	01/04/1993 00:00	2	3	LESS THAN 30MPH	BACK OF FOOTPATH	800	SINGLE ARM	NOT APPLICABLE	RIGID COLUMN	URBIS	AXIA 2 S1	PETITJEAN	SHEET STEEL	6	GALVANISED	DAER
46102027	SPRINGBANK	Brigg Parish	500235.69	408051.69	6	7005	00200399	01/04/1993 00:00	2	3	LESS THAN 30MPH	BACK OF FOOTPATH	800	SINGLE ARM	NOT APPLICABLE	RIGID COLUMN	URBIS	AXIA 2 S1	PETITJEAN	SHEET STEEL	6	GALVANISED	DAER
46102027	SPRINGBANK	Brigg Parish	500256.84	408059.05	7	7006	00200400	01/04/1993 00:00	2	3	LESS THAN 30MPH	BACK OF FOOTPATH	800	SINGLE ARM	NOT APPLICABLE	RIGID COLUMN	URBIS	AXIA 2 S1	PETITJEAN	SHEET STEEL	6	GALVANISED	DAER
46102027	SPRINGBANK	Brigg Parish	500279.08	408054.69	8	7007	00200401	01/04/1993 00:00	2	3	LESS THAN 30MPH	BACK OF FOOTPATH	800	SINGLE ARM	NOT APPLICABLE	RIGID COLUMN	URBIS	AXIA 2 S1	PETITJEAN	SHEET STEEL	6	GALVANISED	DAER
46102027	SPRINGBANK	Brigg Parish	500298.38	408071.24	9	7008	00200402	01/04/1993 00:00	2	3	LESS THAN 30MPH	VERGE	800	SINGLE ARM	NOT APPLICABLE	RIGID COLUMN	URBIS	AXIA 2 S1	PETITJEAN	SHEET STEEL	6	GALVANISED	DAER
46102028	ST ALBANS CLOSE	Scunthorpe	487483.93	409101.64	1	7000	00200408	01/04/1995 00:00	5	2	LESS THAN 30MPH	BACK OF FOOTPATH	0	POST TOP	NOT APPLICABLE	RIGID COLUMN	URBIS	AXIA 2 S1	PETITJEAN	SHEET STEEL	6	GALVANISED	NIDD
46102028	ST ALBANS CLOSE	Scunthorpe	487483.93	409119.22	2	7001	00200409	01/04/1995 00:00	5	2	LESS THAN 30MPH	BACK OF FOOTPATH	0	POST TOP	NOT APPLICABLE	RIGID COLUMN	URBIS	AXIA 2 S1	PETITJEAN	SHEET STEEL	6	GALVANISED	NIDD
46102028	ST ALBANS CLOSE	Scunthorpe	487487.35	409153.33	3	7002	00200410	01/04/1995 00:00	5	2	LESS THAN 30MPH	BACK OF FOOTPATH	0	POST TOP	NOT APPLICABLE	RIGID COLUMN	URBIS	AXIA 2 S1	PETITJEAN	SHEET STEEL	6	GALVANISED	NIDD
46102028	ST ALBANS CLOSE	Scunthorpe	487487.17	409177.43	4	7003	00200411	01/04/1995 00:00	5	2	LESS THAN 30MPH	BACK OF FOOTPATH	0	POST TOP	NOT APPLICABLE	RIGID COLUMN	URBIS	AXIA 2 S1	PETITJEAN	SHEET STEEL	6	GALVANISED	NIDD
46102028	ST ALBANS CLOSE	Scunthorpe	487476.22	409193.64	5	7004	00200412	01/04/1995 00:00	5	2	LESS THAN 30MPH	BACK OF FOOTPATH	0	POST TOP	NOT APPLICABLE	RIGID COLUMN	URBIS	AXIA 2 S1	PETITJEAN	SHEET STEEL	6	GALVANISED	NIDD
46102028	ST ALBANS CLOSE	Scunthorpe	487476.18	409215.76	6	7005	00200413	01/04/1995 00:00	5	2	LESS THAN 30MPH	BACK OF FOOTPATH	0	POST TOP	NOT APPLICABLE	RIGID COLUMN	URBIS	AXIA 2 S1	PETITJEAN	SHEET STEEL	6	GALVANISED	NIDD
46102028	ST ALBANS CLOSE	Scunthorpe	487501.78	409217.14	7	7006	00200414	01/04/1995 00:00	5	2	LESS THAN 30MPH	BACK OF FOOTPATH	0	POST TOP	NOT APPLICABLE	RIGID COLUMN	URBIS	AXIA 2 S1	PETITJEAN	SHEET STEEL	6	GALVANISED	NIDD
46102028	ST ALBANS CLOSE	Scunthorpe	487501.92	409194.14	8	7007	00200415	01/04/1995 00:00	5	2	LESS THAN 30MPH	BACK OF FOOTPATH	0	POST TOP	NOT APPLICABLE	RIGID COLUMN	URBIS	AXIA 2 S1	PETITJEAN	SHEET STEEL

46102044	TALISMAN DRIVE	Bottesford Parish	489295.57	406579.29	1	7000	00200586	01/04/1980 00:00	3	1	LESS THAN 30MPH	BACK OF FOOTPATH	0	POST TOP	MID GREY	RIGID COLUMN	URBIS	AXIA 2 S1	PETITJEAN	SHEET STEEL	5	PAINTED	NIDD
46102044	TALISMAN DRIVE	Bottesford Parish	489301.66	406615.15	2	7001	00200587	17/03/2020 00:00	3	1	LESS THAN 30MPH	BACK OF FOOTPATH	0	POST TOP	NOT APPLICABLE	RIGID COLUMN	URBIS	AXIA 2 S1	MALLATITE	TUBULAR STEEL	6	GALVANISED	TUBULAR
46102044	TALISMAN DRIVE	Bottesford Parish	489298.44	406634.77	3	7002	00200588	01/04/1980 00:00	3	1	LESS THAN 30MPH	BACK OF FOOTPATH	0	POST TOP	MID GREY	RIGID COLUMN	URBIS	AXIA 2 S1	PETITJEAN	SHEET STEEL	5	PAINTED	NIDD
46102044	TALISMAN DRIVE	Bottesford Parish	489265.39	406637.54	4	7003	00200589	01/04/1980 00:00	3	1	LESS THAN 30MPH	BACK OF FOOTPATH	0	POST TOP	MID GREY	RIGID COLUMN	URBIS	AXIA 2 S1	PETITJEAN	SHEET STEEL	5	PAINTED	NIDD
46102044	TALISMAN DRIVE	Bottesford Parish	489238.78	406641.03	5	7004	00200590	01/04/1980 00:00	3	1	LESS THAN 30MPH	BACK OF FOOTPATH	0	POST TOP	MID GREY	RIGID COLUMN	URBIS	AXIA 2 S1	PETITJEAN	SHEET STEEL	5	PAINTED	NIDD
46102044	TALISMAN DRIVE	Bottesford Parish	489326.76	406638.12	6	7005	00200591	01/04/1980 00:00	3	1	LESS THAN 30MPH	BACK OF FOOTPATH	0	POST TOP	MID GREY	RIGID COLUMN	URBIS	AXIA 2 S1	PETITJEAN	SHEET STEEL	5	PAINTED	NIDD
46102044	TALISMAN DRIVE	Bottesford Parish	489358.75	406638.66	7	7006	00200592	01/04/1980 00:00	3	1	LESS THAN 30MPH	BACK OF FOOTPATH	0	POST TOP	MID GREY	RIGID COLUMN	URBIS	AXIA 2 S1	PETITJEAN	SHEET STEEL	5	PAINTED	NIDD
46102045	TAMARISK WAY	Scunthorpe	490962.37	408013.99	1	7000	00200593	01/04/1988 00:00	1	3	LESS THAN 30MPH	FRONT OF FOOTPATH	0	POST TOP	LIGHT GREY	RIGID COLUMN	URBIS	AXIA 2 S1	PETITJEAN	SHEET STEEL	5	PAINTED	NIDD
46102045	TAMARISK WAY	Scunthorpe	490961.16	407980.46	2	7001	00200594	01/04/1988 00:00	1	3	LESS THAN 30MPH	BACK OF FOOTPATH	0	POST TOP	LIGHT GREY	RIGID COLUMN	URBIS	AXIA 2 S1	PETITJEAN	SHEET STEEL	5	PAINTED	NIDD
46102045	TAMARISK WAY	Scunthorpe	490977.05	407964.66	3	7002	00200595	01/04/1988 00:00	1	3	LESS THAN 30MPH	VERGE	0	POST TOP	LIGHT GREY	RIGID COLUMN	URBIS	AXIA 2 S1	PETITJEAN	SHEET STEEL	5	PAINTED	NIDD
46102045	TAMARISK WAY	Scunthorpe	490991.09	407929.3	4	7003	00200596	01/04/1988 00:00	1	3	LESS THAN 30MPH	BACK OF FOOTPATH	0	POST TOP	LIGHT GREY	RIGID COLUMN	URBIS	AXIA 2 S1	PETITJEAN	SHEET STEEL	5	PAINTED	NIDD
46102045	TAMARISK WAY	Scunthorpe	490997.38	407901.56	5	7004	00200597	01/04/1988 00:00	1	3	LESS THAN 30MPH	VERGE	0	POST TOP	LIGHT GREY	RIGID COLUMN	URBIS	AXIA 2 S1	PETITJEAN	SHEET STEEL	5	PAINTED	NIDD
46102047	TEMPLAR COURT	Bottesford Parish	489591.46	407161.23	1	7000	00200598	01/04/2014 00:00	3	1	LESS THAN 30MPH	VERGE	0	POST TOP	NOT APPLICABLE	RIGID COLUMN	URBIS	AXIA 2 S1	MALLATITE	TUBULAR STEEL	6	GALVANISED	TUBULAR
46102047	TEMPLAR COURT	Bottesford Parish	489573.83	407194.07	2	7001	00200599	10/10/2019 00:00	3	1	LESS THAN 30MPH	BACK OF FOOTPATH	0	POST TOP	NOT APPLICABLE	RIGID COLUMN	URBIS	AXIA 2 S1	MALLATITE	TUBULAR STEEL	6	GALVANISED	TUBULAR
46102047	TEMPLAR COURT	Bottesford Parish	489570.94	407228.32	3	7002	00200600	10/10/2019 00:00	3	1	LESS THAN 30MPH	BACK OF FOOTPATH	0	POST TOP	NOT APPLICABLE	RIGID COLUMN	URBIS	AXIA 2 S1	MALLATITE	TUBULAR STEEL	6	GALVANISED	TUBULAR
46102047	TEMPLAR COURT	Bottesford Parish	489569.92	407256.39	4	7003	00200601	01/04/1980 00:00	3	1	LESS THAN 30MPH	BACK OF FOOTPATH	0	POST TOP	NOT APPLICABLE	RIGID COLUMN	URBIS	AXIA 2 S1	PETITJEAN	SHEET STEEL	5	GALVANISED	NIDD
46102047	TEMPLAR COURT	Bottesford Parish	489545.57	407248.95	5	7004	00200602	01/04/1980 00:00	3	1	LESS THAN 30MPH	BACK OF FOOTPATH	0	POST TOP	NOT APPLICABLE	RIGID COLUMN	URBIS	AXIA 2 S1	PETITJEAN	SHEET STEEL	5	GALVANISED	NIDD
46102048	THE BIRCHES	Haxey Parish	474944.74	399768.79	1	7000	00200604	01/04/1980 00:00	6	2	LESS THAN 30MPH	BACK OF FOOTPATH	0	POST TOP	NOT APPLICABLE	RIGID COLUMN	URBIS	AXIA 2 S1	PETITJEAN	SHEET STEEL	5	GALVANISED	NIDD
46102048	THE BIRCHES	Haxey Parish	474973.12	399776.39	2	7001	00200605	01/04/1980 00:00	6	2	LESS THAN 30MPH	BACK OF FOOTPATH	0	POST TOP	NOT APPLICABLE	RIGID COLUMN	URBIS	AXIA 2 S1	PETITJEAN	SHEET STEEL	5	GALVANISED	NIDD
46102048	THE BIRCHES	Haxey Parish	474998.64	399808.83	3	7002	00200606	01/04/1980 00:00	6	2	LESS THAN 30MPH	BACK OF FOOTPATH	0	POST TOP	NOT APPLICABLE	RIGID COLUMN	URBIS	AXIA 2 S1	PETITJEAN	SHEET STEEL	5	GALVANISED	NIDD
46102048	THE BIRCHES	Haxey Parish	474987.01	399838.26	4	7003	00200607	01/04/1980 00:00	6	2	LESS THAN 30MPH	BACK OF FOOTPATH	0	POST TOP	NOT APPLICABLE	RIGID COLUMN	URBIS	AXIA 2 S1	PETITJEAN	SHEET STEEL	5	GALVANISED	NIDD
46102048	THE BIRCHES	Haxey Parish	474990.27	399867.11	5	7004	00200608	01/04/1980 00:00	6	2	LESS THAN 30MPH	BACK OF FOOTPATH	0	POST TOP	NOT APPLICABLE	RIGID COLUMN	URBIS	AXIA 2 S1	PETITJEAN	SHEET STEEL	5	GALVANISED	NIDD
46102048	THE BIRCHES	Haxey Parish	474990.86	399890.22	6	7005	00200609	01/04/1980 00:00	6	2	LESS THAN 30MPH	BACK OF FOOTPATH	0	POST TOP	NOT APPLICABLE	RIGID COLUMN	URBIS	AXIA 2 S1	PETITJEAN	SHEET STEEL	5	GALVANISED	NIDD
46102049	THE BRIDGES	Barton upon Humber Parish	503110.9	421240.24	1	7000	00200610	01/04/2010 00:00	5	2	LESS THAN 30MPH	BACK OF FOOTPATH	0	POST TOP	NOT APPLICABLE	RIGID COLUMN	URBIS	AXIA 2 S1	MALLATITE	TUBULAR STEEL	6	GALVANISED	TUBULAR
46102049	THE BRIDGES	Barton upon Humber Parish	503106.98	421217.45	2	7001	00200611	12/06/2019 00:00	5	2	LESS THAN 30MPH	VERGE	0	POST TOP	NOT APPLICABLE	RIGID COLUMN	URBIS	AXIA 2 S1	MALLATITE	TUBULAR STEEL	6	GALVANISED	TUBULAR
46102049	THE BRIDGES	Barton upon Humber Parish	503123.96	421232.62	3	7002	00200612	12/06/2019 00:00	5	2	LESS THAN 30MPH	BACK OF FOOTPATH	0	POST TOP	NOT APPLICABLE	RIGID COLUMN	URBIS	AXIA 2 S1	MALLATITE	TUBULAR STEEL	6	GALVANISED	TUBULAR
46102049	THE BRIDGES	Barton upon Humber Parish	503134.96	421255.13	4	7003	00200613	12/06/2019 00:00	5	2	LESS THAN 30MPH	BACK OF FOOTPATH	0	POST TOP	NOT APPLICABLE	RIGID COLUMN	URBIS	AXIA 2 S1	MALLATITE	TUBULAR STEEL	6	GALVANISED	TUBULAR
46102049	THE BRIDGES	Barton upon Humber Parish	503126.11	421276.19	5	7004	00200614	12/06/2019 00:00	5	2	LESS THAN 30MPH	VERGE	0	POST TOP	NOT APPLICABLE	RIGID COLUMN	URBIS	AXIA 2 S1	MALLATITE	TUBULAR STEEL	6	GALVANISED	TUBULAR
46102049	THE BRIDGES	Barton upon Humber Parish	503147.9	421282.9	6	7005	00200615	12/06/2019 00:00	5	2	LESS THAN 30MPH	BACK OF FOOTPATH	0	POST TOP	NOT APPLICABLE	RIGID COLUMN	URBIS	AXIA 2 S1	MALLATITE	TUBULAR STEEL	6	GALVANISED	TUBULAR
46102050	THE CLOSE	Goxhill Parish	510539.48	422355.05	1	7000	00200616	01/04/1980 00:00	4	4	LESS THAN 30MPH	BACK OF FOOTPATH	0	POST TOP	MID GREY	RIGID COLUMN	URBIS	AXIA 2 S1	PETITJEAN	SHEET STEEL	5	PAINTED	NIDD
46102050	THE CLOSE	Goxhill Parish	510512.27	422369.62	2	7001	00200617	01/04/1980 00:00	4	4	LESS THAN 30MPH	BACK OF FOOTPATH	0	POST TOP	MID GREY	RIGID COLUMN	URBIS	AXIA 2 S1	PETITJEAN	SHEET STEEL	5	PAINTED	NIDD
46102050	THE CLOSE	Goxhill Parish	510490.88	422380.08	3	7002	00200618	01/04/1980 00:00	4	4	LESS THAN 30MPH	BACK OF FOOTPATH	0	POST TOP	MID GREY	RIGID COLUMN	URBIS	AXIA 2 S1	PETITJEAN	SHEET STEEL	5	PAINTED	NIDD
46102050	THE CLOSE	Goxhill Parish	510501.11	422395.24	4	7003	00200619	01/04/1980 00:00	4	4	LESS THAN 30MPH	BACK OF FOOTPATH	0	POST TOP	MID GREY	RIGID COLUMN	URBIS	AXIA 2 S1	PETITJEAN	SHEET STEEL	5	PAINTED	NIDD
46102050	THE CLOSE	Goxhill Parish	510514.82	422421.58	5	7004	00200620	01/04/1980 00:00	4	4	LESS THAN 30MPH	BACK OF FOOTPATH	0	POST TOP	MID GREY	RIGID COLUMN	URBIS	AXIA 2 S1	PETITJEAN	SHEET STEEL	5	PAINTED	NIDD
46102050	THE CLOSE	Goxhill Parish	510539.55	422415.94	6	7005	00200621	01/04/1980 00:00	4	4	LESS THAN 30MPH	BACK OF FOOTPATH	0	POST TOP	MID GREY	RIGID COLUMN	URBIS	AXIA 2 S1	PETITJEAN	SHEET STEEL	5	PAINTED	NIDD
46102050	THE CLOSE	Goxhill Parish	510521	422399	7	7006	00200622	01/04/1980 00:00	4	4	LESS THAN 30MPH	BACK OF FOOTPATH	0	POST TOP	MID GREY	RIGID COLUMN	URBIS	AXIA 2 S1	PETITJEAN	SHEET STEEL	5	PAINTED	NIDD
46102051	THE CLOSE	Scunthorpe	489692.34	410614.96	1FP	7000	00200623	29/06/2020 00:00	2	4	LESS THAN 30MPH	BACK OF FOOTPATH	0	POST TOP	NOT APPLICABLE	RIGID COLUMN	URBIS	AXIA 2 S1	MALLATITE	TUBULAR STEEL	6	GALVANISED	TUBULAR
46102051	THE CLOSE	Scunthorpe	489686.92	410581.28	2	7001	00200624	29/06/2020 00:00	2	4	LESS THAN 30MPH	BACK OF FOOTPATH	0	POST TOP	NOT APPLICABLE	RIGID COLUMN	URBIS	AXIA 2 S1	MALLATITE	TUBULAR STEEL	6	GALVANISED	TUBULAR
46102051	THE CLOSE	Scunthorpe	489670.58	410555.34	3	7002	00200625	29/06/2020 00:00	2	4	LESS THAN 30MPH	BACK OF FOOTPATH	0	POST TOP	NOT APPLICABLE	RIGID COLUMN	URBIS	AXIA 2 S1	MALLATITE	TUBULAR STEEL	6	GALVANISED	TUBULAR
46102051	THE CLOSE	Scunthorpe	489694.54	410545.76	4	7003	00200626	29/06/2020 00:00	2	4	LESS THAN 30MPH	BACK OF FOOTPATH	0	POST TOP	NOT APPLICABLE	RIGID COLUMN	URBIS	AXIA 2 S1	MALLATITE	TUBULAR STEEL	6	GALVANISED	TUBULAR
46102051	THE CLOSE	Scunthorpe	489717.18	410559.82	5	7004	00200627	29/06/2020 00:00	2	4	LESS THAN 30MPH	BACK OF FOOTPATH	0	POST TOP	NOT APPLICABLE	RIGID COLUMN	URBIS	AXIA 2 S1	MALLATITE	TUBULAR STEEL	6	GALVANISED	TUBULAR
46102052	THE COPSE	Brigg Parish	501044.77	406986.69	1	7000	00200628	01/04/2005 00:00	2	3	LESS THAN 30MPH	BACK OF FOOTPATH	0	POST TOP	LIGHT GREY	RIGID COLUMN	URBIS	AXIA 2 S1	PETITJEAN	SHEET STEEL	5	PAINTED	NIDD
46102052	THE COPSE	Brigg Parish	501041.73	406953.6	2	7001	00200629	01/04/2005 00:00	2	3	LESS THAN 30MPH	BACK OF FOOTPATH	0	POST TOP	LIGHT GREY	RIGID COLUMN	URBIS	AXIA 2 S1	PETITJEAN	SHEET STEEL	5	PAINTED	NIDD
46102052	THE COPSE	Brigg Parish	501013.16	406935.71	3	7002	00200630	01/04/2005 00:00	2	3	LESS THAN 30MPH	BACK OF FOOTPATH	0	POST TOP	LIGHT GREY	RIGID COLUMN	URBIS	AXIA 2 S1	PETITJEAN	SHEET STEEL	5	PAINTED	NIDD
46102052	THE COPSE	Brigg Parish	501003.14	406963.72	4	7003	00200631	01/04/2005 00:00	2	3	LESS THAN 30MPH	BACK OF FOOTPATH	0	POST TOP	LIGHT GREY	RIGID COLUMN	URBIS	AXIA 2 S1	PETITJEAN	SHEET STEEL	5	PAINTED	NIDD
46102053	THE CROFTS	Scunthorpe	489890.46	410839.93	1	7000	00200632	29/01/2020 00:00	2	4	LESS THAN 30MPH	BACK OF FOOTPATH	0	POST TOP	NOT APPLICABLE	RIGID COLUMN	URBIS	AXIA 2 S1	MALLATITE	TUBULAR STEEL	6	GALVANISED	TUBULAR
46102053	THE CROFTS	Scunthorpe	489862.69	410817.27	2	7001	00200633	29/01/2020 00:00	2	4	LESS THAN 30MPH	BACK OF FOOTPATH	0	POST TOP	NOT APPLICABLE	RIGID COLUMN	URBIS	AXIA 2 S1	MALLATITE	TUBULAR STEEL	6	GALVANISED	TUBULAR
46102053	THE CROFTS	Scunthorpe	489858.29	410787.39	3	7002	00200634	29/01/2020 00:00	2	4	LESS THAN 30MPH	BACK OF FOOTPATH	0	POST TOP	NOT APPLICABLE	RIGID COLUMN	URBIS	AXIA 2 S1	MALLATITE	TUBULAR STEEL	6	GALVANISED	TUBULAR
46102053	THE CROFTS	Scunthorpe	489853.96	410838.72	4	7003	00200635	01/04/2010 00:00	2	4	LESS THAN 30MPH	FRONT OF FOOTPATH	0	POST TOP	NOT APPLICABLE	RIGID COLUMN	URBIS	AXIA 2 S1	MALLATITE	TUBULAR STEEL	6	GALVANISED	TUBULAR
46102053	THE CROFTS	Scunthorpe	489827.12	410824.81	5	7004	00200636	01/04/2005 00:00	2	4	LESS THAN 30MPH	BACK OF FOOTPATH	300	SINGLE ARM	NOT APPLICABLE	RIGID COLUMN	URBIS	AXIA 2 S1	CU	TUBULAR STEEL	5	GALVANISED	STEPPED TUBULAR
46102053	THE CROFTS	Scunthorpe	489789.15	410831.03	6	7005	00200637	29/01/2020 00:00	2	4	LESS THAN 30MPH	BACK OF FOOTPATH	0	POST TOP	NOT APPLICABLE	RIGID COLUMN	URBIS	AXIA 2 S1	MALLATITE	TUBULAR STEEL	6	GALVANISED	TUBULAR
46102054	THE DELL	Scunthorpe	487616.57	408135.04	1	7000	00200638	01/04/2010 00:00	3	4	LESS THAN 30MPH	BACK OF FOOTPATH	0	POST TOP	NOT APPLICABLE	RIGID COLUMN	URBIS	AXIA 2 S1	MALLATITE	TUBULAR STEEL	6	GALVANISED	TUBULAR
46102054	THE DELL	Scunthorpe	487637.82	408109.98	2	7001	00200639	19/11/2020 00:00	3	4	LESS THAN 30MPH	BACK OF FOOTPATH	0	POST TOP	NOT APPLICABLE	RIGID COLUMN	URBIS	AXIA 2 S1	MALLATITE	TUBULAR STEEL	6	GALVANISED	TUBULAR
46102054	THE DELL	Scunthorpe	487657.43	408082.19	3	7002	00200640	19/11/2020 00:00	3	4	LESS THAN 30MPH	BACK OF FOOTPATH	0	POST TOP	NOT APPLICABLE	RIGID COLUMN	URBIS	AXIA 2 S1	MALLATITE	TUBULAR STEEL	6	GALVANISED	TUBULAR
46102054	THE DELL	Scunthorpe	487673.85	408062.96	4	7003	00200641	19/11/2020 00:00	3	4	LESS THAN 30MPH	BACK OF FOOTPATH	0	POST TOP	NOT APPLICABLE	RIGID COLUMN	URBIS	AXIA 2 S1	MALLATITE	TUBULAR STEEL	6	GALVANISED	TUBULAR
46102054	THE DELL	Scunthorpe	487705.45	408062.96	5	7004	00200642	01/04/2010 00:00	3	4	LESS THAN 30MPH	FRONT OF FOOTPATH	0	POST TOP	NOT APPLICABLE	RIGID COLUMN	URBIS	AXIA 2 S1	MALLATITE	TUBULAR STEEL	6	GALVANISED	TUBULAR
46102054	THE DELL	Scunthorpe	487717.59	408040.48	6	7005	00200643	01/04/1980 00:00	3	4	LESS THAN 30MPH	BACK OF FOOTPATH	300	SINGLE ARM	NOT APPLICABLE	RIGID COLUMN	URBIS	AXIA 2 S1	PETITJEAN	SHEET STEEL	5	GALVANISED	DAER
46102054	THE DELL	Scunthorpe	487695.8	408033.4	7	7006	00200644	19/11/2020 00:00	3	4	LESS THAN 30MPH	BACK OF FOOTPATH	0	POST TOP	NOT APPLICABLE	RIGID COLUMN	URBIS	AXIA 2 S1	MALLATITE	TUBULAR STEEL	6	GALVANISED	TUBULAR
46102055	THE FAIRWAYS	Gunness Parish	486904.47	410701.47	1	7000	00200645	01/04/1980 00:00	2	2	LESS THAN 30MPH	VERGE	0	POST TOP	LIGHT GREY	RIGID COLUMN	URBIS	AXIA 2 S1	PETITJEAN	SHEET STEEL	5	PAINTED	NIDD
46102055	THE FAIRWAYS	Gunness Parish	487118.19	410671.87	10	7009	00200654	01/04/1997 00:00	2	2	LESS THAN 30MPH	BACK OF FOOTPATH	0	POST TOP	NOT APPLICABLE	RIGID COLUMN	URBIS	AXIA 2 S1	MALLATITE	TUBULAR STEEL	5	GALVANISED	STEPPED TUBULAR
46102055	THE FAIRWAYS	Gunness Parish	487139.9	410668.82	11	7010	00200655	01/04/1995 00:00	2	2	LESS THAN 30MPH	BACK OF FOOTPATH	0	POST TOP	NOT APPLICABLE	RIGID COLUMN	URBIS	AXIA 2 S1	MALLATITE	TUBULAR STEEL	5	GALVANISED	STEPPED TUBULAR
46102055	THE FAIRWAYS	Gunness Parish	486902.96	410682.15	2	7001	00200646	01/04/1993 00:00	2	2	LESS THAN 30MPH	BACK OF FOOTPATH	0	POST TOP	NOT APPLICABLE	RIGID COLUMN	URBIS	AXIA 2 S1	MALLATITE	TUBULAR STEEL	5	GALVANISED	STEPPED TUBULAR
46102055	THE FAIRWAYS	Gunness Parish	486917.74	410694.92	3	7002	00200647	01/04/1993 00:00	2	2	LESS THAN 30MPH	BACK OF FOOTPATH	0	POST TOP	NOT APPLICABLE	RIGID COLUMN	URBIS	AXIA 2 S1	MALLATITE	TUBULAR STEEL	5	GALVANISED	STEPPED TUBULAR
46102055	THE FAIRWAYS	Gunness Parish	486943.87	410695.23	4	7003	00200648	01/04/1993 00:00	2	2	LESS THAN 30MPH	BACK OF FOOTPATH	0	POST TOP	NOT APPLICABLE	RIGID COLUMN	URBIS	AXIA 2 S1	MALLATITE	TUBULAR STEEL	5	GALVANISED	STEPPED TUBULAR
46102055	THE FAIRWAYS	Gunness Parish	486972.4	410692.93	5	7004	00200649	01/04/1993 00:00	2	2	LESS THAN 30MPH	BACK OF FOOTPATH	0	POST TOP	NOT APPLICABLE	RIGID COLUMN	URBIS	AXIA 2 S1	MALLATITE	TUBULAR STEEL	5	GALVANISED	STEPPED TUBULAR
46102055	THE FAIRWAYS	Gunness Parish	487003.86	410688.12	6	7005	00200650	01/04/1993 00:00	2	2	LESS THAN 30MPH	BACK OF FOOTPATH	0	POST TOP	NOT APPLICABLE	RIGID COLUMN	URBIS	AXIA 2 S1	MALLATITE	TUBULAR STEEL	5	GALVANISED	STEPPED TUBULAR
46102055	THE FAIRWAYS	Gunness Parish	487035.69	410687.16	7	7006	00200651	01/04/1997 00:00	2	2	LESS THAN 30MPH	BACK OF FOOTPATH	0	POST TOP	NOT APPLICABLE	RIGID COLUMN	URBIS	AXIA 2 S1	MALLATITE	TUBULAR STEEL	5	GALVANISED	STEPPED TUBULAR
46102055	THE FAIRWAYS	Gunness Parish	487063.94	410684.16	8	7007	00200652	01/04/1997 00:00	2	2	LESS THAN 30MPH	BACK OF FOOTPATH	0	POST TOP	NOT APPLICABLE	RIGID COLUMN	URBIS	AXIA 2 S1	MALLATITE	TUBULAR STEEL	5	GALVANISED	STEPPED TUBULAR
46102055	THE FAIRWAYS	Gunness Parish	487093.46	410681.42	9	7008	00200653	01/04/1997 00:00	2	2	LESS THAN 30MPH	BACK OF FOOTPATH	0	POST TOP	NOT APPLICABLE	RIGID COLUMN	URBIS	AXIA 2 S1	MALLATITE	TUBULAR STEEL	5	GALVANISED	STEPPED TUBULAR
46102056	THE MEADOWS	Burringham Parish	483754.79	409156.89	1	7000	00200656	01/04/1980 00:00	2	1	LESS THAN 30MPH	BACK OF FOOTPATH	0	POST TOP	MID GREY	RIGID COLUMN	URBIS	AXIA 2 S1	PETITJEAN	SHEET STEEL	5	NOT APPLICABI	NIDD
46102056	THE MEADOWS	Burringham Parish	483675.78	409301.64	10	7009	00200665	01/04/1980 00:00	2	1	LESS THAN 30MPH	BACK OF FOOTPATH	0	POST TOP	MID GREY	RIGID COLUMN	URBIS	AXIA 2 S1	PETITJEAN	SHEET STEEL	5	NOT APPLICABI	NIDD
46102056	THE MEADOWS	Burringham Parish	483721.53	409247.41	11	7010	00200666	01/04/1980 00:00	2	1	LESS THAN 30MPH	BACK OF FOOTPATH	0	POST TOP	MID GREY	RIGID COLUMN	URBIS	AXIA 2 S1	PETITJEAN	SHEET STEEL	5	NOT APPLICABI	NIDD
46102056	THE MEADOWS	Burringham Parish	483741.96	409279.67	12	7011	00200667	01/04/1980 00:00	2	1	LESS THAN 30MPH	BACK OF FOOTPATH	0	POST TOP	MID GREY	RIGID COLUMN	URBIS	AXIA 2 S1	PETITJEAN	SHEET STEEL	5	NOT APPLICABI	NIDD
46102056	THE MEADOWS	Burringham Parish	483775.06	409189.04	2	7001	00200657	01/04/1980 00:00	2	1	LESS THAN 30MPH	BACK OF FOOTPATH	0	POST TOP	MID GREY	RIGID COLUMN	URBIS	AXIA 2 S1	PETITJEAN	SHEET STEEL	5	NOT APPLICABI	NIDD
46102056	THE MEADOWS	Burringham Parish	483780.84	409226.82	3	7002	00200658	01/04/1980 00:00	2	1	LESS THAN 30MPH	BACK OF FOOTPATH	0	POST TOP	MID GREY	RIGID COLUMN	URBIS	AXIA 2 S1	PETITJEAN	SHEET STEEL	5	NOT APPLICABI	NIDD
46102056	THE MEADOWS	Burringham Parish	483794.82	409258	4	7003	00200659	01/04/1980 00:00	2	1	LESS THAN 30MPH	BACK OF FOOTPATH	0	POST TOP	MID GREY	RIGID COLUMN	URBIS	AXIA 2 S1	PETITJEAN	SHEET STEEL	5	NOT APPLICABI	NIDD
46102056	THE MEADOWS	Burringham Parish	483758.18	409212.92	5	7004	00200660	01/04/1980 00:00	2	1	LESS THAN 30MPH	BACK OF FOOTPATH	0	POST TOP	MID GREY	RIGID COLUMN	URBIS	AXIA 2 S1	PETITJEAN	SHEET STEEL	5	NOT APPLICABI	NIDD
46102056	THE MEADOWS	Burringham Parish	483727.74	409225.66	6	7005	00200661	13/08/2019 00:00	2	1	LESS THAN 30MPH	BACK OF FOOTPATH	0	POST TOP	NOT APPLICABLE	RIGID COLUMN	URBIS	AXIA 2 S1	MALLATITE	TUBULAR STEEL	6	GALVANISED	TUBULAR
46102056	THE MEADOWS	Burringham Parish	483704.35	409235.07	7	7006	00200662	01/04/1980 00:00	2	1	LESS THAN 30MPH	BACK OF FOOTPATH	0	POST TOP	MID GREY	RIGID COLUMN	URBIS	AXIA 2 S1	PETITJEAN	SHEET STEEL	5	NOT APPLICABI	NIDD
46102056	THE MEADOWS	Burringham Parish	483671.75	409248.95	8	7007	00200663	31/10/2023 00:00	2	1	LESS THAN 30MPH	BACK OF FOOTPATH	0	POST TOP	NOT APPLICABLE	RIGID COLUMN	URBIS	AXIA 2 S1	MALLATITE	TUBULAR STEEL	6	GALVANISED	MALLATITE
46102056	THE MEADOWS	Burringham Parish	483659.11	409272.6	9	7008	00200664	01/04/1980 00:00	2	1	LESS THAN 30MPH	BACK OF FOOTPATH	0	POST TOP	MID GREY	RIGID COLUMN	URBIS	AXIA 2 S1	PETITJEAN	SHEET STEEL	5	NOT APPLICABI	NIDD
46102057	THE MEADOWS	Haxey Parish	474489.49	399740.14	1	7000	00200669	01/04/1980 00:00	6	2	LESS THAN 30MPH	VERGE	0	POST TOP	NOT APPLICABLE	RIGID COLUMN	URBIS	AXIA 2 S1	PETITJEAN	SHEET STEEL	5	GALVANISED	NIDD
46102057	THE MEADOWS	Haxey Parish	474521.54	399724.7	2	7001	00200670	01/04/1980 00:00	6	2	LESS THAN 30MPH	VERGE	0	POST TOP	NOT APPLICABLE	RIGID COLUMN	URBIS	AXIA 2 S1	PETITJEAN	SHEET STEEL	5	GALVANISED	NIDD
46102057	THE MEADOWS	Haxey Parish	474551.71	399717.16	3	7002	00200671	01/04/1980 00:00	6	2	LESS THAN 30MPH	VERGE	0	POST TOP	NOT APPLICABLE	RIGID COLUMN	URBIS	AXIA 2 S1	PETITJEAN	SHEET STEEL	5	GALVANISED	NIDD
46102057	THE MEADOWS	Haxey Parish	474568.08	399712.47	4	7003	00200672	01/04/1980 00:00	6	2	LESS THAN 30MPH	VERGE	0	POST TOP	NOT APPLICABLE	RIGID COLUMN	URBIS	AXIA 2 S1	PETITJEAN	SHEET STEEL	5	GALVANISED	NIDD
46102057	THE MEADOWS	Haxey Parish	474602.44	399702.66	5	7004	00200673	01/04/1980 00:00	6	2	LESS THAN 30MPH	VERGE	0	POST TOP	NOT APPLICABLE	RIGID COLUMN	URBIS	AXIA 2 S1	PETITJEAN	SHEET STEEL	5	GALVANISED	NIDD
46102057	THE MEADOWS	Haxey Parish	474654.03	399701.01	6	7005	00200674	01/04/1980 00:00	6	2	LESS THAN 30MPH	VERGE	0	POST TOP	NOT APPLICABLE	RIGID COLUMN	URBIS	AXIA 2 S1	PETITJEAN	SHEET STEEL	5	GALVANISED	NIDD
46102057	THE MEADOWS	Haxey Parish	474675.96	399697.19	7	7006	00200675	01/04/1980 00:00	6	2	LESS THAN 30MPH	VERGE	0	POST TOP	NOT APPLICABLE	RIGID COLUMN	URBIS	AXIA 2 S1	PETITJEAN	SHEET STEEL	5	GALVANISED	NIDD
46102057	THE MEADOWS	Haxey Parish	474708.76	399690.47	8	7007	00200676	01/04/1980 00:00	6	2	LESS THAN 30MPH

46102068	TOWNSIDE	East Halton Parish	514059.5	418847.62	31	7030	00200854	01/04/1989 00:00	4	4	BETWEEN 30-50 MPH	VERGE	300	SINGLE ARM	MID GREY	RIGID COLUMN	URBIS	AXIA 2 S1	PETITJEAN	SHEET STEEL	5	PAINTED	DAER		
46102068	TOWNSIDE	East Halton Parish	514062.11	418816.42	32	7031	00200855	01/04/1989 00:00	4	4	BETWEEN 30-50 MPH	VERGE	300	SINGLE ARM	MID GREY	RIGID COLUMN	URBIS	AXIA 2 S1	PETITJEAN	SHEET STEEL	5	PAINTED	DAER		
46102068	TOWNSIDE	East Halton Parish	514068.25	418787.24	33	7032	00200856	01/04/1989 00:00	4	4	BETWEEN 30-50 MPH	VERGE	300	SINGLE ARM	MID GREY	RIGID COLUMN	URBIS	AXIA 2 S1	PETITJEAN	SHEET STEEL	5	PAINTED	DAER		
46102068	TOWNSIDE	East Halton Parish	514074.27	418760.01	34	7033	00200857	01/04/1989 00:00	4	4	BETWEEN 30-50 MPH	VERGE	300	SINGLE ARM	MID GREY	RIGID COLUMN	URBIS	AXIA 2 S1	PETITJEAN	SHEET STEEL	5	PAINTED	DAER		
46102068	TOWNSIDE	East Halton Parish	514080.93	418729.34	35	7034	00200858	01/04/1989 00:00	4	4	BETWEEN 30-50 MPH	VERGE	300	SINGLE ARM	MID GREY	RIGID COLUMN	URBIS	AXIA 2 S1	PETITJEAN	SHEET STEEL	5	PAINTED	DAER		
46102068	TOWNSIDE	East Halton Parish	514087.08	418699.11	36	7035	00200859	01/04/1989 00:00	4	4	BETWEEN 30-50 MPH	VERGE	300	SINGLE ARM	MID GREY	RIGID COLUMN	URBIS	AXIA 2 S1	PETITJEAN	SHEET STEEL	5	PAINTED	DAER		
46102068	TOWNSIDE	East Halton Parish	514093.44	418673.38	37	7036	00200860	01/04/1989 00:00	4	4	BETWEEN 30-50 MPH	VERGE	300	SINGLE ARM	MID GREY	RIGID COLUMN	URBIS	AXIA 2 S1	PETITJEAN	SHEET STEEL	5	PAINTED	DAER		
46102068	TOWNSIDE	East Halton Parish	514106.72	418636.67	38	7037	00200861	01/04/1989 00:00	4	4	BETWEEN 30-50 MPH	VERGE	300	SINGLE ARM	MID GREY	RIGID COLUMN	URBIS	AXIA 2 S1	PETITJEAN	SHEET STEEL	5	PAINTED	DAER		
46102068	TOWNSIDE	East Halton Parish	514136.65	418625.06	39	7038	00200862	01/04/1989 00:00	4	4	BETWEEN 30-50 MPH	BACK OF FOOTPATH	300	SINGLE ARM	MID GREY	RIGID COLUMN	URBIS	AXIA 2 S1	PETITJEAN	SHEET STEEL	5	PAINTED	DAER		
46102068	TOWNSIDE	East Halton Parish	513902.1	420015.19	4	7003	00200827	01/04/1980 00:00	4	4	LESS THAN 30MPH	VERGE	500	SINGLE ARM	NOT APPLICABLE	POLE MOUNTED	URBIS	AXIA 2 S1	WOODEN PO	WOOD	5	NOT APPLICABI	Not Applicable		
46102068	TOWNSIDE	East Halton Parish	514156.6	418610.24	40	7039	00200863	01/04/1989 00:00	4	4	BETWEEN 30-50 MPH	BACK OF FOOTPATH	300	SINGLE ARM	MID GREY	RIGID COLUMN	URBIS	AXIA 2 S1	PETITJEAN	SHEET STEEL	5	PAINTED	DAER		
46102068	TOWNSIDE	East Halton Parish	514182.85	418589.63	41	7040	00200864	01/04/1989 00:00	4	4	BETWEEN 30-50 MPH	BACK OF FOOTPATH	300	SINGLE ARM	MID GREY	RIGID COLUMN	URBIS	AXIA 2 S1	PETITJEAN	SHEET STEEL	5	PAINTED	DAER		
46102068	TOWNSIDE	East Halton Parish	514196.28	418567.17	42	7041	00200865	01/04/1989 00:00	4	4	BETWEEN 30-50 MPH	BACK OF FOOTPATH	300	SINGLE ARM	MID GREY	RIGID COLUMN	URBIS	AXIA 2 S1	PETITJEAN	SHEET STEEL	5	PAINTED	DAER		
46102068	TOWNSIDE	East Halton Parish	514205.85	418539.18	43	7042	00200866	01/04/1989 00:00	4	4	BETWEEN 30-50 MPH	FRONT OF FOOTPATH	300	SINGLE ARM	MID GREY	RIGID COLUMN	URBIS	AXIA 2 S1	PETITJEAN	SHEET STEEL	5	PAINTED	DAER		
46102068	TOWNSIDE	East Halton Parish	514212.66	418506.01	44	7043	00200867	01/04/1989 00:00	4	4	BETWEEN 30-50 MPH	FRONT OF FOOTPATH	300	SINGLE ARM	MID GREY	RIGID COLUMN	URBIS	AXIA 2 S1	PETITJEAN	SHEET STEEL	5	PAINTED	DAER		
46102068	TOWNSIDE	East Halton Parish	514215.86	418479.44	45	7044	00200868	01/04/1989 00:00	4	4	BETWEEN 30-50 MPH	FRONT OF FOOTPATH	300	SINGLE ARM	MID GREY	RIGID COLUMN	URBIS	AXIA 2 S1	PETITJEAN	SHEET STEEL	5	PAINTED	DAER		
46102068	TOWNSIDE	East Halton Parish	514212.25	418443.47	46	7045	00200869	01/04/1989 00:00	4	4	BETWEEN 30-50 MPH	BACK OF FOOTPATH	300	SINGLE ARM	MID GREY	RIGID COLUMN	URBIS	AXIA 2 S1	PETITJEAN	SHEET STEEL	5	PAINTED	DAER		
46102068	TOWNSIDE	East Halton Parish	514203.72	418421.37	47	7046	00200870	01/04/2016 00:00	4	4	BETWEEN 30-50 MPH	BACK OF FOOTPATH	0	POST TOP	NOT APPLICABLE	RIGID COLUMN	URBIS	AXIA 2 S1	MALLATITE	TUBULAR STEEL	6	GALVANISED	TUBULAR		
46102068	TOWNSIDE	East Halton Parish	514195.96	418395.51	48	7047	00200871	01/04/1989 00:00	4	4	BETWEEN 30-50 MPH	BACK OF FOOTPATH	300	SINGLE ARM	MID GREY	RIGID COLUMN	URBIS	AXIA 2 S1	PETITJEAN	SHEET STEEL	5	PAINTED	DAER		
46102068	TOWNSIDE	East Halton Parish	514190.39	418362.33	49	7048	00200872	01/04/1989 00:00	4	4	BETWEEN 30-50 MPH	BACK OF FOOTPATH	300	SINGLE ARM	MID GREY	RIGID COLUMN	URBIS	AXIA 2 S1	PETITJEAN	SHEET STEEL	5	PAINTED	DAER		
46102068	TOWNSIDE	East Halton Parish	513910.97	419972.29	5	7004	00200828	01/04/1980 00:00	4	4	LESS THAN 30MPH	VERGE	500	SINGLE ARM	NOT APPLICABLE	POLE MOUNTED	URBIS	AXIA 2 S1	WOODEN PO	WOOD	5	NOT APPLICABI	Not Applicable		
46102068	TOWNSIDE	East Halton Parish	513918.95	419928.52	6	7005	00200829	01/04/1980 00:00	4	4	LESS THAN 30MPH	BACK OF FOOTPATH	500	SINGLE ARM	NOT APPLICABLE	POLE MOUNTED	URBIS	AXIA 2 S1	WOODEN PO	WOOD	5	NOT APPLICABI	Not Applicable		
46102068	TOWNSIDE	East Halton Parish	513927.15	419877.7	7	7006	00200830	01/04/2016 00:00	4	4	LESS THAN 30MPH	BACK OF FOOTPATH	300	SINGLE ARM	NOT APPLICABLE	POLE MOUNTED	URBIS	AXIA 2 S1	WOODEN PO	WOOD	5	NOT APPLICABI	Not Applicable		
46102068	TOWNSIDE	East Halton Parish	513933.8	419837.57	8	7007	00200831	01/04/1980 00:00	4	4	LESS THAN 30MPH	BACK OF FOOTPATH	500	SINGLE ARM	NOT APPLICABLE	POLE MOUNTED	URBIS	AXIA 2 S1	WOODEN PO	WOOD	6	NOT APPLICABI	Not Applicable		
46102068	TOWNSIDE	East Halton Parish	513935.76	419798.45	9	7008	00200832	01/04/1980 00:00	4	4	LESS THAN 30MPH	BACK OF FOOTPATH	500	SINGLE ARM	NOT APPLICABLE	POLE MOUNTED	URBIS	AXIA 2 S1	WOODEN PO	WOOD	6	NOT APPLICABI	Not Applicable		
46102069	TRAVISS CLOSE	Scunthorpe	489621.29	409595.62	1	7000	00200873	01/04/2013 00:00	2	4	LESS THAN 30MPH	VERGE	0	POST TOP	NOT APPLICABLE	RIGID COLUMN	URBIS	AXIA 2 S1	MALLATITE	TUBULAR STEEL	6	GALVANISED	TUBULAR		
46102069	TRAVISS CLOSE	Scunthorpe	489613.77	409567.77	2	7001	00200874	28/09/2023 00:00	2	4	LESS THAN 30MPH	VERGE	0	POST TOP	NOT APPLICABLE	RIGID COLUMN	URBIS	AXIA 2 S1	MALLATITE	TUBULAR STEEL	6	GALVANISED	TUBULAR		
46102069	TRAVISS CLOSE	Scunthorpe	0	0		7002	04200681		NA	NA	NOT APPLICABLE	NOT APPLICABLE	NA	NOT APPLICA	NOT APPLICABLE	NOT APPLICABLE	OT APPLICABL	NOT APPLICABLE	NOT APPLICA	NOT APPLICABLE	NA	NOT APPLICABI	Not Applicable		
46102070	TRENT VIEW	Keadby with Althorpe Parish	483369.47	410829.58	1	7000	00200875	01/04/1990 00:00	4	3	LESS THAN 30MPH	VERGE	300	SINGLE ARM	NOT APPLICABLE	RIGID COLUMN	URBIS	AXIA 2 S1	PETITJEAN	SHEET STEEL	5	GALVANISED	DAER		
46102070	TRENT VIEW	Keadby with Althorpe Parish	483600.16	410870.41	10	7009	00200884	01/04/1997 00:00	4	3	LESS THAN 30MPH	VERGE	0	POST TOP	NOT APPLICABLE	RIGID COLUMN	URBIS	AXIA 2 S1	PETITJEAN	SHEET STEEL	5	GALVANISED	NIDD		
46102070	TRENT VIEW	Keadby with Althorpe Parish	483634.19	410860.92	11	7010	00200885	01/04/1997 00:00	4	3	LESS THAN 30MPH	VERGE	0	POST TOP	NOT APPLICABLE	RIGID COLUMN	URBIS	AXIA 2 S1	PETITJEAN	SHEET STEEL	5	GALVANISED	NIDD		
46102070	TRENT VIEW	Keadby with Althorpe Parish	483661.32	410867.61	12	7011	00200886	01/04/1997 00:00	4	3	LESS THAN 30MPH	VERGE	0	POST TOP	NOT APPLICABLE	RIGID COLUMN	URBIS	AXIA 2 S1	PETITJEAN	SHEET STEEL	5	GALVANISED	NIDD		
46102070	TRENT VIEW	Keadby with Althorpe Parish	483361.81	410863.2	2	7001	00200876	01/04/2008 00:00	4	3	LESS THAN 30MPH	VERGE	0	POST TOP	NOT APPLICABLE	RIGID COLUMN	URBIS	AXIA 2 S1	BRITISH STEE	TUBULAR STEEL	6	GALVANISED	ASH		
46102070	TRENT VIEW	Keadby with Althorpe Parish	483373.96	410891.59	3	7002	00200877	01/04/1985 00:00	4	3	LESS THAN 30MPH	BACK OF FOOTPATH	300	SINGLE ARM	NOT APPLICABLE	RIGID COLUMN	URBIS	AXIA 2 S1	PETITJEAN	SHEET STEEL	5	GALVANISED	DAER		
46102070	TRENT VIEW	Keadby with Althorpe Parish	483399.71	410891.46	4	7003	00200878	01/04/1985 00:00	4	3	LESS THAN 30MPH	VERGE	300	SINGLE ARM	NOT APPLICABLE	RIGID COLUMN	URBIS	AXIA 2 S1	PETITJEAN	SHEET STEEL	5	GALVANISED	DAER		
46102070	TRENT VIEW	Keadby with Althorpe Parish	483429.57	410889.51	5	7004	00200879	01/04/1985 00:00	4	3	LESS THAN 30MPH	VERGE	300	SINGLE ARM	NOT APPLICABLE	RIGID COLUMN	URBIS	AXIA 2 S1	PETITJEAN	SHEET STEEL	5	GALVANISED	DAER		
46102070	TRENT VIEW	Keadby with Althorpe Parish	483453.55	410887.04	6	7005	00200880	01/04/1985 00:00	4	3	LESS THAN 30MPH	VERGE	300	SINGLE ARM	NOT APPLICABLE	RIGID COLUMN	URBIS	AXIA 2 S1	PETITJEAN	SHEET STEEL	5	GALVANISED	DAER		
46102070	TRENT VIEW	Keadby with Althorpe Parish	483483.3	410873.92	7	7006	00200881	01/04/1985 00:00	4	3	LESS THAN 30MPH	VERGE	300	SINGLE ARM	NOT APPLICABLE	RIGID COLUMN	URBIS	AXIA 2 S1	PETITJEAN	SHEET STEEL	5	GALVANISED	DAER		
46102070	TRENT VIEW	Keadby with Althorpe Parish	483522.97	410878.67	8	7007	00200882	01/04/1985 00:00	4	3	LESS THAN 30MPH	VERGE	300	SINGLE ARM	NOT APPLICABLE	RIGID COLUMN	URBIS	AXIA 2 S1	PETITJEAN	SHEET STEEL	5	GALVANISED	DAER		
46102070	TRENT VIEW	Keadby with Althorpe Parish	483566.61	410874	9	7008	00200883	01/04/1980 00:00	4	3	LESS THAN 30MPH	VERGE	300	SINGLE ARM	NOT APPLICABLE	RIGID COLUMN	URBIS	AXIA 2 S1	PETITJEAN	SHEET STEEL	5	GALVANISED	DAER		
46102071	VICARAGE CRESCENT	Burton upon Stather Parish	487190.73	417928.28	1	7000	00200887	01/04/2006 00:00	2	3	LESS THAN 30MPH	BACK OF FOOTPATH	0	POST TOP	NOT APPLICABLE	RIGID COLUMN	URBIS	AXIA 2 S1	MALLATITE	TUBULAR STEEL	6	GALVANISED	STEPPED TUBULAR		
46102071	VICARAGE CRESCENT	Burton upon Stather Parish	487236.36	418037.28	10	7009	00200896	14/05/2020 00:00	2	3	LESS THAN 30MPH	BACK OF FOOTPATH	0	POST TOP	NOT APPLICABLE	RIGID COLUMN	URBIS	AXIA 2 S1	MALLATITE	TUBULAR STEEL	6	GALVANISED	TUBULAR		
46102071	VICARAGE CRESCENT	Burton upon Stather Parish	487186.72	417952.06	2	7001	00200888	01/04/2006 00:00	2	3	LESS THAN 30MPH	BACK OF FOOTPATH	0	POST TOP	NOT APPLICABLE	RIGID COLUMN	URBIS	AXIA 2 S1	MALLATITE	TUBULAR STEEL	6	GALVANISED	STEPPED TUBULAR		
46102071	VICARAGE CRESCENT	Burton upon Stather Parish	487194.72	418002.03	3	7002	00200889	01/04/2006 00:00	2	3	LESS THAN 30MPH	BACK OF FOOTPATH	0	POST TOP	NOT APPLICABLE	RIGID COLUMN	URBIS	AXIA 2 S1	MALLATITE	TUBULAR STEEL	6	GALVANISED	STEPPED TUBULAR		
46102071	VICARAGE CRESCENT	Burton upon Stather Parish	487200.12	418025.6	4	7003	00200890	01/04/2008 00:00	2	3	LESS THAN 30MPH	VERGE	0	POST TOP	NOT APPLICABLE	RIGID COLUMN	URBIS	AXIA 2 S1	BRITISH STEE	TUBULAR STEEL	6	GALVANISED	ASH		
46102071	VICARAGE CRESCENT	Burton upon Stather Parish	487206.3	418060.82	5	7004	00200891	01/04/2008 00:00	2	3	LESS THAN 30MPH	BACK OF FOOTPATH	0	POST TOP	NOT APPLICABLE	RIGID COLUMN	URBIS	AXIA 2 S1	BRITISH STEE	TUBULAR STEEL	6	GALVANISED	ASH		
46102071	VICARAGE CRESCENT	Burton upon Stather Parish	487218.84	418094.71	6	7005	00200892	14/05/2020 00:00	2	3	LESS THAN 30MPH	BACK OF FOOTPATH	0	POST TOP	NOT APPLICABLE	RIGID COLUMN	URBIS	AXIA 2 S1	MALLATITE	TUBULAR STEEL	6	GALVANISED	TUBULAR		
46102071	VICARAGE CRESCENT	Burton upon Stather Parish	487236.22	418106.89	7	7006	00200893	01/04/2006 00:00	2	3	LESS THAN 30MPH	BACK OF FOOTPATH	0	POST TOP	NOT APPLICABLE	RIGID COLUMN	URBIS	AXIA 2 S1	MALLATITE	TUBULAR STEEL	6	GALVANISED	STEPPED TUBULAR		
46102071	VICARAGE CRESCENT	Burton upon Stather Parish	487270.69	418098.56	8	7007	00200894	14/05/2020 00:00	2	3	LESS THAN 30MPH	BACK OF FOOTPATH	0	POST TOP	NOT APPLICABLE	RIGID COLUMN	URBIS	AXIA 2 S1	MALLATITE	TUBULAR STEEL	6	GALVANISED	TUBULAR		
46102071	VICARAGE CRESCENT	Burton upon Stather Parish	487273.02	418065.7	9	7008	00200895	01/04/2006 00:00	2	3	LESS THAN 30MPH	BACK OF FOOTPATH	0	POST TOP	NOT APPLICABLE	RIGID COLUMN	URBIS	AXIA 2 S1	MALLATITE	TUBULAR STEEL	6	GALVANISED	STEPPED TUBULAR		
46102072	ULCEBY ROAD	South Killingholme Parish	514443	415814	1	7017	00211865	01/04/2017 00:00	3	1	GREATER THAN 50MPH	VERGE	0	POST TOP	NOT APPLICABLE	RIGID COLUMN	PHILIPS	LUMA 2A 13 KL	SAPA	ALUMINIUM	8	ALUMINIUM	STEPPED TUBULAR		
46102072	ULCEBY ROAD	South Killingholme Parish	512509.93	414942.46	1	7011	00200908	01/04/1980 00:00	3	1	BETWEEN 30-50 MPH	VERGE	1000	SINGLE ARM	LIGHT GREY	RIGID COLUMN	URBIS	AXIA 2 S1	PETITJEAN	SHEET STEEL	10	PAINTED	THAMES		
46102072	ULCEBY ROAD	South Killingholme Parish	514190	415721	10	7026	00211874	01/04/2017 00:00	3	1	GREATER THAN 50MPH	VERGE	0	POST TOP	NOT APPLICABLE	RIGID COLUMN	PHILIPS	LUMA 2A 13 KL	SAPA	ALUMINIUM	8	ALUMINIUM	STEPPED TUBULAR		
46102072	ULCEBY ROAD	South Killingholme Parish	514157	415706	11	7027	00211875	01/04/2017 00:00	3	1	GREATER THAN 50MPH	VERGE	0	POST TOP	NOT APPLICABLE	RIGID COLUMN	PHILIPS	LUMA 2A 13 KL	SAPA	ALUMINIUM	8	ALUMINIUM	STEPPED TUBULAR		
46102072	ULCEBY ROAD	South Killingholme Parish	514125	415691	12	7028	00211876	01/04/2017 00:00	3	1	GREATER THAN 50MPH	VERGE	0	POST TOP	NOT APPLICABLE	RIGID COLUMN	PHILIPS	LUMA 2A 13 KL	SAPA	ALUMINIUM	8	ALUMINIUM	STEPPED TUBULAR		
46102072	ULCEBY ROAD	South Killingholme Parish	514093	415676	13	7029	00211877	01/04/2017 00:00	3	1	GREATER THAN 50MPH	VERGE	0	POST TOP	NOT APPLICABLE	RIGID COLUMN	PHILIPS	LUMA 2A 13 KL	SAPA	ALUMINIUM	8	ALUMINIUM	STEPPED TUBULAR		
46102072	ULCEBY ROAD	South Killingholme Parish	514060	415661	14	7030	00211878	01/04/2017 00:00	3	1	GREATER THAN 50MPH	VERGE	0	POST TOP	NOT APPLICABLE	RIGID COLUMN	PHILIPS	LUMA 2A 13 KL	SAPA	ALUMINIUM	8	ALUMINIUM	STEPPED TUBULAR		
46102072	ULCEBY ROAD	South Killingholme Parish	514028	415646	15	7031	00211879	01/04/2017 00:00	3	1	GREATER THAN 50MPH	VERGE	0	POST TOP	NOT APPLICABLE	RIGID COLUMN	PHILIPS	LUMA 2A 13 KL	SAPA	ALUMINIUM	8	ALUMINIUM	STEPPED TUBULAR		
46102072	ULCEBY ROAD	South Killingholme Parish	513996	415631	16	7032	00211880	01/04/2017 00:00	3	1	GREATER THAN 50MPH	VERGE	0	POST TOP	NOT APPLICABLE	RIGID COLUMN	PHILIPS	LUMA 2A 13 KL	SAPA	ALUMINIUM	8	ALUMINIUM	STEPPED TUBULAR		
46102072	ULCEBY ROAD	South Killingholme Parish	513963	415616	17	7033	00211881	01/04/2017 00:00	3	1	GREATER THAN 50MPH	VERGE	0	POST TOP	NOT APPLICABLE	RIGID COLUMN	PHILIPS	LUMA 2A 13 KL	SAPA	ALUMINIUM	8	ALUMINIUM	STEPPED TUBULAR		
46102072	ULCEBY ROAD	South Killingholme Parish	513931	415601	18	7034	00211882	01/04/2017 00:00	3	1	GREATER THAN 50MPH	VERGE	0	POST TOP	NOT APPLICABLE	RIGID COLUMN	PHILIPS	LUMA 2A 13 KL	SAPA	ALUMINIUM	8	ALUMINIUM	STEPPED TUBULAR		
46102072	ULCEBY ROAD	South Killingholme Parish	513898	415586	19	7035	00211883	01/04/2017 00:00	3	1	GREATER THAN 50MPH	VERGE	0	POST TOP	NOT APPLICABLE	RIGID COLUMN	PHILIPS	LUMA 2A 13 KL	SAPA	ALUMINIUM	8	ALUMINIUM	STEPPED TUBULAR		
46102072	ULCEBY ROAD	South Killingholme Parish	514444	415827	2	7018	00211866	01/04/2017 00:00	3	1	GREATER THAN 50MPH	VERGE	0	POST TOP	NOT APPLICABLE	RIGID COLUMN	PHILIPS	LUMA 2A 13 KL	SAPA	ALUMINIUM	8	ALUMINIUM	STEPPED TUBULAR		
46102072	ULCEBY ROAD	South Killingholme Parish	512538.96	414952.68	2	7012	00200909	01/04/1980 00:00	3	1	BETWEEN 30-50 MPH	VERGE	1000	SINGLE ARM	LIGHT GREY	RIGID COLUMN	URBIS	AXIA 2 S1	PETITJEAN	SHEET STEEL	10	PAINTED	THAMES		
46102072	ULCEBY ROAD	South Killingholme Parish	513866	415571	20	7036	00211884	01/04/2017 00:00	3	1	GREATER THAN 50MPH	VERGE	0	POST TOP	NOT APPLICABLE	RIGID COLUMN	PHILIPS	LUMA 2A 13 KL	SAPA	ALUMINIUM	8	ALUMINIUM	STEPPED TUBULAR		
46102072	ULCEBY ROAD	South Killingholme Parish	513834	415556	21	7037	00211885	01/04/2017 00:00	3	1	GREATER THAN 50MPH	VERGE	0	POST TOP	NOT APPLICABLE	RIGID COLUMN	PHILIPS	LUMA 2A 13 KL	SAPA	ALUMINIUM	8	ALUMINIUM	STEPPED TUBULAR		
46102072	ULCEBY ROAD	South Killingholme Parish	513804	415555	22	7038	00211886	25/01/2024 00:00	3	1	GREATER THAN 50MPH	VERGE	0	POST TOP	NOT APPLICABLE	RIGID COLUMN	PHILIPS	LUMA 2A 13 KL	MALLATITE	TUBULAR STEEL	8	GALVANISED	TUBULAR		
46102072	ULCEBY ROAD	South Killingholme Parish	513771	415540	23	7039	00211887	25/01/2024 00:00	3	1	GREATER THAN 50MPH	VERGE	0	POST TOP	NOT APPLICABLE	RIGID COLUMN	PHILIPS	LUMA 2A 13 KL	MALLATITE	TUBULAR STEEL	8	GALVANISED	TUBULAR		
46102072	ULCEBY ROAD	South Killingholme Parish	513739	415525	24	7040	00211888	25/01/2024 00:00	3	1	GREATER THAN 50MPH	VERGE	0	POST TOP	NOT APPLICABLE	RIGID COLUMN	PHILIPS	LUMA 2A 13 KL	MALLATITE	TUBULAR STEEL	8	GALVANISED	TUBULAR		
46102072	ULCEBY ROAD	South Killingholme Parish	513706	415510	25	7041	00211889	25/01/2024 00:00	3	1	GREATER THAN 50MPH	VERGE	0	POST TOP	NOT APPLICABLE	RIGID COLUMN	PHILIPS	LUMA 2A 13 KL	MALLATITE	TUBULAR STEEL	8	GALVANISED	TUBULAR		
46102072	ULCEBY ROAD	South Killingholme Parish	513674	415495	26	7042	00211890	01/04/2017 00:00	3	1	GREATER THAN 50MPH	VERGE	0	POST TOP	NOT APPLICABLE	RIGID COLUMN	PHILIPS	LUMA 2A 13 KL	SAPA	ALUMINIUM	8	ALUMINIUM	STEPPED TUBULAR		
46102072	ULCEBY ROAD	South Killingholme Parish	514408	415823	3	7019	00211867	01/04/2017 00:00	3	1	GREATER THAN 50MPH	VERGE	0	POST TOP	NOT APPLICABLE	RIGID COLUMN	PHILIPS	LUMA 2A 13 KL	SAPA	ALUMINIUM	8	ALUMINIUM	STEPPED TUBULAR		
46102072	ULCEBY ROAD	South Killingholme Parish	512570.68	414968.8	3	7013	00200910	01/04/1980 00:00	3	1	BETWEEN 30-50 MPH	BACK OF FOOTPATH	1000	SINGLE ARM	LIGHT GREY	RIGID COLUMN	URBIS	AXIA 2 S1	PETITJEAN	SHEET STEEL	10	PAINTED	THAMES		
46102072	ULCEBY ROAD	South Killingholme Parish	512591.48	414980.81	4	7014	00200911	01/04/1980 00:00	3	1	BETWEEN 30-50 MPH	VERGE	1000	SINGLE ARM	LIGHT GREY	RIGID COLUMN	URBIS	AXIA 2 S1	PETITJEAN	SHEET STEEL	10	PAINTED	THAMES		
46102072	ULCEBY ROAD	South Killingholme Parish	514373	415814	4	7020	00211868	01/04/2018 00:00	3	1	GREATER THAN 50MPH	VERGE	0	POST TOP	NOT APPLICABLE	RIGID COLUMN	PHILIPS	LUMA 2A 13 KL	SAPA	ALUMINIUM	8	ALUMINIUM	STEPPED TUBULAR		
46102072	ULCEBY ROAD	South Killingholme Parish	512617.85	414994.73	5	7015	00200912	01/04/1980 00:00	3	1	BETWEEN 30-50 MPH	VERGE	1000	SINGLE ARM	LIGHT GREY	RIGID COLUMN	URBIS	AXIA 2 S1	PETITJEAN	SHEET STEEL	10	PAINTED	THAMES		
46102072	ULCEBY ROAD	South Killingholme Parish	514340	415802	5	7021	00211869	01/04/2018 00:00	3	1	GREATER THAN 50MPH	VERGE	0	POST TOP	NOT APPLICABLE	RIGID COLUMN	PHILIPS	LUMA 2A 13 KL	SAPA	ALUMINIUM	8	ALUMINIUM	STEPPED TUBULAR		
46102072	ULCEBY ROAD	South Killingholme Parish	512639.33	415004.22	6	7016	00200913	01/04/1980 00:00	3	1	BETWEEN 30-50 MPH	VERGE	1000	SINGLE ARM	LIGHT GREY	RIGID COLUMN	URBIS	AXIA 2 S1	PETITJEAN	SHEET STEEL	10	PAINTED	THAMES		
46102072	ULCEBY ROAD	South Killingholme Parish	514306	415788	6	7022	00211870	01/04/2018 00:00	3	1	GREATER THAN 50MPH	VERGE	0	POST TOP	NOT APPLICABLE	RIGID COLUMN	PHILIPS	LUMA 2A 13 KL	SAPA	ALUMINIUM	8	ALUMINIUM	STEPPED TUBULAR		
46102072	ULCEBY ROAD	South Killingholme Parish	514287	415766	7	7023	00211871	01/04/2017 00:00	3	1	GREATER THAN 50MPH	VERGE	0	POST TOP	NOT APPLICABLE	RIGID COLUMN	PHILIPS	LUMA 2A 13 KL	SAPA	ALUMINIUM	8	ALUMINIUM	STEPPED TUBULAR		
46102072	ULCEBY ROAD	South Killingholme Parish	512664.94	415015.27	7	7010	00200907	01/04/1980 00:00	3	1	BETWEEN 30-50 MPH	VERGE	1000	SINGLE ARM	LIGHT GREY	RIGID COLUMN	URBIS	AXIA 2 S1	PETITJEAN	SHEET STEEL	10	PAINTED	THAMES		
46102072	ULCEBY ROAD	South Killingholme Parish	514255	415751	8	7024	00211872	01/04/2017 00:00	3	1	GREATER THAN 50MPH	VERGE	0	POST TOP	NOT APPLICABLE	RIGID COLUMN	PHILIPS	LUMA 2A 13 KL	SAPA	ALUMINIUM	8	ALUMINIUM	STEPPED TUBULAR		
46102072	ULCEBY ROAD	South Killingholme Parish	514222	415736	9	7025	00211873	01/04/2017 00:00	3	1	GREATER THAN 50MPH	VERGE	0	POST TOP	NOT APPLICABLE	RIGID COLUMN	PHILIPS	LUMA 2A 13 KL	SAPA	ALUMINIUM	8	ALUMINIUM	STEPPED TUBULAR		
46102073	VALLEY VIEW DRIVE	Bottesford Parish	489334.15	407046.73	1	7000	00200914	01/04/1985 00:00	3	1	LESS THAN 30MPH	VERGE	1000	SINGLE ARM	MID GREY	RIGID COLUMN	URBIS	AXIA 2 S1	PETITJEAN	SHEET STEEL	8	PAINTED	THAMES		
46102073	VALLEY VIEW DRIVE	Bottesford Parish	489404.9	406804.72	10	7009	00200923	01/04/1985 00:00	3	1	LESS THAN 30MPH	BACK OF FOOTPATH	1000	SINGLE ARM	MID GREY	RIGID COLUMN	URBIS	AXIA 2 S1	PETITJEAN	SHEET STEEL	8	PAINTED	THAMES		
46102073	VALLEY VIEW DRIVE	Bottesford Parish	489433.34	406809.2	11	7010	00200924	01/04/1985 00:00	3	1	LESS THAN 30MPH	BACK OF FOOTPATH	1000	SINGLE ARM	MID GREY	RIGID COLUMN	URBIS	AXIA 2 S1	PETITJEAN	SHEET STEEL	8	PAINTED	THAMES		
46102073	VALLEY VIEW DRIVE	Bottesford Parish	489457.94	406815.86	12	7011	00200925	01/04/1985 00:00	3	1	LESS THAN 30MPH	BACK OF FOOTPATH	1000	SINGLE ARM	MID GREY	RIGID COLUMN	URB

46102082	WELL STREET	Messingham Parish	489109.08	404461.28	5	7005	00201083	01/04/1980 00:00	4	1	LESS THAN 30MPH	BACK OF FOOTPATH	300	SINGLE ARM	LIGHT GREY	RIGID COLUMN	URBIS	AXIA 2 S1	PETITJEAN	SHEET STEEL	5	PAINTED	DAER
46102082	WELL STREET	Messingham Parish	489091.05	404434.76	6	7006	00201084	01/04/1980 00:00	4	1	LESS THAN 30MPH	ON POLE	300	SINGLE ARM	NOT APPLICABLE	POLE MOUNTED	URBIS	AXIA 2 S1	WOODEN PO	WOOD	5	NOT APPLICABI	Not Applicable
46102082	WELL STREET	Messingham Parish	489070.05	404434.37	7	7007	00201085	01/04/2010 00:00	4	1	LESS THAN 30MPH	BACK OF FOOTPATH	0	POST TOP	NOT APPLICABLE	RIGID COLUMN	URBIS	AXIA 2 S1	MALLATITE	TUBULAR STEEL	6	GALVANISED	TUBULAR
46102082	WELL STREET	Messingham Parish	489029.09	404438.23	8	7008	00201086	01/04/2010 00:00	4	1	LESS THAN 30MPH	BACK OF FOOTPATH	0	POST TOP	NOT APPLICABLE	RIGID COLUMN	URBIS	AXIA 2 S1	MALLATITE	TUBULAR STEEL	6	GALVANISED	TUBULAR
46102082	WELL STREET	Messingham Parish	488994.44	404445.65	9	7009	00201087	01/04/1980 00:00	4	1	LESS THAN 30MPH	VERGE	300	SINGLE ARM	LIGHT GREY	RIGID COLUMN	URBIS	AXIA 2 S1	PETITJEAN	SHEET STEEL	5	PAINTED	DAER
46102083	WELLINGTON WAY	Elsham Parish	504412.51	413660.5	1	7005	00198157	01/04/1981 00:00	6	1	LESS THAN 30MPH	VERGE	1500	SINGLE ARM	MID GREY	RIGID COLUMN	URBIS	AXIA 2 S1	PETITJEAN	SHEET STEEL	8	PAINTED	THAMES
46102083	WELLINGTON WAY	Elsham Parish	504415.27	413633.84	2	7000	00201088	01/04/1981 00:00	6	1	LESS THAN 30MPH	VERGE	1500	SINGLE ARM	MID GREY	RIGID COLUMN	URBIS	AXIA 2 S1	PETITJEAN	SHEET STEEL	8	PAINTED	THAMES
46102083	WELLINGTON WAY	Elsham Parish	504443.76	413630.47	3	7001	00201089	01/04/1981 00:00	6	1	LESS THAN 30MPH	VERGE	1500	SINGLE ARM	MID GREY	RIGID COLUMN	URBIS	AXIA 2 S1	PETITJEAN	SHEET STEEL	8	PAINTED	THAMES
46102083	WELLINGTON WAY	Elsham Parish	504464.92	413624.32	4	7002	00201090	01/04/1981 00:00	6	1	LESS THAN 30MPH	VERGE	1500	SINGLE ARM	MID GREY	RIGID COLUMN	URBIS	AXIA 2 S1	PETITJEAN	SHEET STEEL	8	PAINTED	THAMES
46102083	WELLINGTON WAY	Elsham Parish	504492.38	413615.51	5	7003	00201091	01/04/1981 00:00	6	1	LESS THAN 30MPH	VERGE	1500	SINGLE ARM	MID GREY	RIGID COLUMN	URBIS	AXIA 2 S1	PETITJEAN	SHEET STEEL	8	PAINTED	THAMES
46102083	WELLINGTON WAY	Elsham Parish	504522.88	413604.72	6FP	7004	00201092	01/04/1981 00:00	6	1	LESS THAN 30MPH	VERGE	1500	SINGLE ARM	MID GREY	RIGID COLUMN	URBIS	AXIA 2 S1	PETITJEAN	SHEET STEEL	8	PAINTED	THAMES
46102084	WELLS STREET	Scunthorpe	489558.21	411703.7	10FP	7009	00201102	02/04/2021 00:00	4	4	LESS THAN 30MPH	BACK OF FOOTPATH	500	SINGLE ARM	NOT APPLICABLE	RIGID COLUMN	URBIS	AXIA 2 S1	MALLATITE	TUBULAR STEEL	8	GALVANISED	TUBULAR
46102084	WELLS STREET	Scunthorpe	489547.67	411695.12	11	7010	00201103	02/04/2021 00:00	4	4	LESS THAN 30MPH	BACK OF FOOTPATH	500	SINGLE ARM	NOT APPLICABLE	RIGID COLUMN	URBIS	AXIA 2 S1	MALLATITE	TUBULAR STEEL	8	GALVANISED	TUBULAR
46102084	WELLS STREET	Scunthorpe	489591.95	411636.67	1BB	7011	00201104	01/04/2013 00:00	4	4	LESS THAN 30MPH	FRONT OF FOOTPATH	0	POST TOP	BLACKWHITE	RIGID COLUMN	WRTL	STELA WIDE 52 LED	MALLATITE	TUBULAR STEEL	6	GALVANISED	TUBULAR
46102084	WELLS STREET	Scunthorpe	489654.37	411461.97	2	7001	00201094	01/04/1970 00:00	4	4	NOT ON A ROAD	OTHER	300	DOUBLE ARM	GREEN	RIGID COLUMN	PHILIPS	HPP133	OTHER	CAST IRON	5	PAINTED	OTHER
46102084	WELLS STREET	Scunthorpe	489585.25	411628.03	2BB	7012	00201105	01/04/2013 00:00	4	4	LESS THAN 30MPH	FRONT OF FOOTPATH	0	POST TOP	BLACKWHITE	RIGID COLUMN	WRTL	STELA WIDE 52 LED	MALLATITE	TUBULAR STEEL	6	GALVANISED	TUBULAR
46102084	WELLS STREET	Scunthorpe	489653.68	411486.02	3	7002	00201095	02/04/2021 00:00	4	4	LESS THAN 30MPH	BACK OF FOOTPATH	500	SINGLE ARM	NOT APPLICABLE	RIGID COLUMN	URBIS	AXIA 2 S1	MALLATITE	TUBULAR STEEL	8	GALVANISED	TUBULAR
46102084	WELLS STREET	Scunthorpe	489634.59	411507.8	4	7003	00201096	02/04/2021 00:00	4	4	LESS THAN 30MPH	BACK OF FOOTPATH	500	SINGLE ARM	NOT APPLICABLE	RIGID COLUMN	URBIS	AXIA 2 S1	MALLATITE	TUBULAR STEEL	8	GALVANISED	TUBULAR
46102084	WELLS STREET	Scunthorpe	489629.12	411550.56	5	7004	00201097	02/04/2021 00:00	4	4	LESS THAN 30MPH	BACK OF FOOTPATH	500	SINGLE ARM	NOT APPLICABLE	RIGID COLUMN	URBIS	AXIA 2 S1	MALLATITE	TUBULAR STEEL	8	GALVANISED	TUBULAR
46102084	WELLS STREET	Scunthorpe	489620.51	411571.26	6	7005	00201098	02/04/2021 00:00	4	4	LESS THAN 30MPH	BACK OF FOOTPATH	500	SINGLE ARM	NOT APPLICABLE	RIGID COLUMN	URBIS	AXIA 2 S1	MALLATITE	TUBULAR STEEL	8	GALVANISED	TUBULAR
46102084	WELLS STREET	Scunthorpe	489595.96	411599.25	7	7006	00201099	02/04/2021 00:00	4	4	LESS THAN 30MPH	BACK OF FOOTPATH	500	SINGLE ARM	NOT APPLICABLE	RIGID COLUMN	URBIS	AXIA 2 S1	MALLATITE	TUBULAR STEEL	8	GALVANISED	TUBULAR
46102084	WELLS STREET	Scunthorpe	489587.04	411623.18	8	7007	00201100	02/04/2021 00:00	4	4	LESS THAN 30MPH	BACK OF FOOTPATH	500	SINGLE ARM	NOT APPLICABLE	RIGID COLUMN	URBIS	AXIA 2 S1	MALLATITE	TUBULAR STEEL	8	GALVANISED	TUBULAR
46102084	WELLS STREET	Scunthorpe	489590.88	411647.08	99A FP	7008	00201101	01/04/2011 00:00	4	4	LESS THAN 30MPH	BACK OF FOOTPATH	1000	DOUBLE ARM	NOT APPLICABLE	RIGID COLUMN	URBIS	AXIA 2 S1	VALMONT ST	SHEET STEEL	8	GALVANISED	THAMES
46102085	WENDOVER ROAD	Messingham Parish	489315.57	404499.94	1	7000	00201106	01/04/1980 00:00	4	1	LESS THAN 30MPH	VERGE	0	POST TOP	NOT APPLICABLE	RIGID COLUMN	URBIS	AXIA 2 S1	PETITJEAN	SHEET STEEL	5	GALVANISED	NIDD
46102085	WENDOVER ROAD	Messingham Parish	489624.67	404500.16	10	7009	00201115	01/04/1980 00:00	4	1	LESS THAN 30MPH	BACK OF FOOTPATH	0	POST TOP	NOT APPLICABLE	RIGID COLUMN	URBIS	AXIA 2 S1	MALLATITE	TUBULAR STEEL	6	GALVANISED	STEPPED TUBULAR
46102085	WENDOVER ROAD	Messingham Parish	489633.14	404467.02	11	7010	00201116	01/04/1980 00:00	4	1	LESS THAN 30MPH	VERGE	0	POST TOP	MID GREY	RIGID COLUMN	URBIS	AXIA 2 S1	PETITJEAN	SHEET STEEL	5	PAINTED	NIDD
46102085	WENDOVER ROAD	Messingham Parish	489628.09	404426.13	12	7011	00201117	10/04/2019 00:00	4	1	LESS THAN 30MPH	VERGE	0	POST TOP	NOT APPLICABLE	RIGID COLUMN	URBIS	AXIA 2 S1	MALLATITE	TUBULAR STEEL	6	GALVANISED	TUBULAR
46102085	WENDOVER ROAD	Messingham Parish	489622.95	404389.25	13	7012	00201118	01/04/1980 00:00	4	1	LESS THAN 30MPH	VERGE	0	POST TOP	MID GREY	RIGID COLUMN	URBIS	AXIA 2 S1	PETITJEAN	SHEET STEEL	5	PAINTED	NIDD
46102085	WENDOVER ROAD	Messingham Parish	489624.44	404352.46	14	7013	00201119	10/04/2019 00:00	4	1	LESS THAN 30MPH	VERGE	0	POST TOP	NOT APPLICABLE	RIGID COLUMN	URBIS	AXIA 2 S1	MALLATITE	TUBULAR STEEL	6	GALVANISED	TUBULAR
46102085	WENDOVER ROAD	Messingham Parish	489612.2	404320.03	15	7014	00201120	01/04/1980 00:00	4	1	LESS THAN 30MPH	VERGE	0	POST TOP	MID GREY	RIGID COLUMN	URBIS	AXIA 2 S1	PETITJEAN	SHEET STEEL	5	PAINTED	NIDD
46102085	WENDOVER ROAD	Messingham Parish	489348.14	404506.66	2	7001	00201107	01/04/1980 00:00	4	1	LESS THAN 30MPH	VERGE	0	POST TOP	NOT APPLICABLE	RIGID COLUMN	URBIS	AXIA 2 S1	MALLATITE	TUBULAR STEEL	5	GALVANISED	STEPPED TUBULAR
46102085	WENDOVER ROAD	Messingham Parish	489386.31	404510.42	3	7002	00201108	01/04/1980 00:00	4	1	LESS THAN 30MPH	BACK OF FOOTPATH	0	POST TOP	NOT APPLICABLE	RIGID COLUMN	URBIS	AXIA 2 S1	MALLATITE	TUBULAR STEEL	6	GALVANISED	STEPPED TUBULAR
46102085	WENDOVER ROAD	Messingham Parish	489418.41	404512.05	4	7003	00201109	01/04/1980 00:00	4	1	LESS THAN 30MPH	VERGE	0	POST TOP	MID GREY	RIGID COLUMN	URBIS	AXIA 2 S1	PETITJEAN	SHEET STEEL	5	PAINTED	NIDD
46102085	WENDOVER ROAD	Messingham Parish	489456.43	404514.34	5	7004	00201110	01/04/2010 00:00	4	1	LESS THAN 30MPH	BACK OF FOOTPATH	0	POST TOP	NOT APPLICABLE	RIGID COLUMN	URBIS	AXIA 2 S1	MALLATITE	TUBULAR STEEL	6	GALVANISED	TUBULAR
46102085	WENDOVER ROAD	Messingham Parish	489485.62	404527.45	6	7005	00201111	01/04/1980 00:00	4	1	LESS THAN 30MPH	BACK OF FOOTPATH	0	POST TOP	NOT APPLICABLE	RIGID COLUMN	URBIS	AXIA 2 S1	MALLATITE	TUBULAR STEEL	6	GALVANISED	STEPPED TUBULAR
46102085	WENDOVER ROAD	Messingham Parish	489525.24	404519.96	7	7006	00201112	01/04/1980 00:00	4	1	LESS THAN 30MPH	BACK OF FOOTPATH	0	POST TOP	NOT APPLICABLE	RIGID COLUMN	URBIS	AXIA 2 S1	MALLATITE	TUBULAR STEEL	6	GALVANISED	STEPPED TUBULAR
46102085	WENDOVER ROAD	Messingham Parish	489563.56	404530.92	8	7007	00201113	01/04/1980 00:00	4	1	LESS THAN 30MPH	BACK OF FOOTPATH	0	POST TOP	NOT APPLICABLE	RIGID COLUMN	URBIS	AXIA 2 S1	MALLATITE	TUBULAR STEEL	6	GALVANISED	STEPPED TUBULAR
46102085	WENDOVER ROAD	Messingham Parish	489599.51	404510.25	9	7008	00201114	01/04/1980 00:00	4	1	LESS THAN 30MPH	BACK OF FOOTPATH	0	POST TOP	NOT APPLICABLE	RIGID COLUMN	URBIS	AXIA 2 S1	MALLATITE	TUBULAR STEEL	6	GALVANISED	STEPPED TUBULAR
46102086	WEST COMMON GARDENS	Scunthorpe	488940.97	409496.77	1	7000	00201121	01/04/2001 00:00	5	4	LESS THAN 30MPH	BACK OF FOOTPATH	300	SINGLE ARM	NOT APPLICABLE	RIGID COLUMN	URBIS	AXIA 2 S1	MALLATITE	TUBULAR STEEL	6	GALVANISED	STEPPED TUBULAR
46102086	WEST COMMON GARDENS	Scunthorpe	488993.65	409221.92	10	7009	00201130	01/04/2001 00:00	5	4	LESS THAN 30MPH	BACK OF FOOTPATH	300	SINGLE ARM	NOT APPLICABLE	RIGID COLUMN	URBIS	AXIA 2 S1	MALLATITE	TUBULAR STEEL	6	GALVANISED	STEPPED TUBULAR
46102086	WEST COMMON GARDENS	Scunthorpe	488996.37	409194.4	11	7010	00201131	01/04/2001 00:00	5	4	LESS THAN 30MPH	BACK OF FOOTPATH	300	SINGLE ARM	NOT APPLICABLE	RIGID COLUMN	URBIS	AXIA 2 S1	MALLATITE	TUBULAR STEEL	6	GALVANISED	STEPPED TUBULAR
46102086	WEST COMMON GARDENS	Scunthorpe	488997.46	409168.04	12	7011	00201132	01/04/2001 00:00	5	4	LESS THAN 30MPH	BACK OF FOOTPATH	300	SINGLE ARM	NOT APPLICABLE	RIGID COLUMN	URBIS	AXIA 2 S1	MALLATITE	TUBULAR STEEL	6	GALVANISED	STEPPED TUBULAR
46102086	WEST COMMON GARDENS	Scunthorpe	489001.31	409140.75	13	7012	00201133	01/04/2001 00:00	5	4	LESS THAN 30MPH	BACK OF FOOTPATH	300	SINGLE ARM	NOT APPLICABLE	RIGID COLUMN	URBIS	AXIA 2 S1	MALLATITE	TUBULAR STEEL	6	GALVANISED	STEPPED TUBULAR
46102086	WEST COMMON GARDENS	Scunthorpe	489004.66	409113.78	14	7013	00201134	01/04/2001 00:00	5	4	LESS THAN 30MPH	BACK OF FOOTPATH	300	SINGLE ARM	NOT APPLICABLE	RIGID COLUMN	URBIS	AXIA 2 S1	MALLATITE	TUBULAR STEEL	6	GALVANISED	STEPPED TUBULAR
46102086	WEST COMMON GARDENS	Scunthorpe	489008.53	409089.74	15	7014	00201135	01/04/2001 00:00	5	4	LESS THAN 30MPH	BACK OF FOOTPATH	300	SINGLE ARM	NOT APPLICABLE	RIGID COLUMN	URBIS	AXIA 2 S1	MALLATITE	TUBULAR STEEL	6	GALVANISED	STEPPED TUBULAR
46102086	WEST COMMON GARDENS	Scunthorpe	489011.59	409066.17	16	7015	00201136	01/04/2001 00:00	5	4	LESS THAN 30MPH	BACK OF FOOTPATH	300	SINGLE ARM	NOT APPLICABLE	RIGID COLUMN	URBIS	AXIA 2 S1	MALLATITE	TUBULAR STEEL	6	GALVANISED	STEPPED TUBULAR
46102086	WEST COMMON GARDENS	Scunthorpe	489022.47	409035.92	17	7016	00201137	01/04/2001 00:00	5	4	LESS THAN 30MPH	BACK OF FOOTPATH	300	SINGLE ARM	NOT APPLICABLE	RIGID COLUMN	URBIS	AXIA 2 S1	MALLATITE	TUBULAR STEEL	6	GALVANISED	STEPPED TUBULAR
46102086	WEST COMMON GARDENS	Scunthorpe	488999.37	409022.34	18	7017	00201138	01/04/2001 00:00	5	4	LESS THAN 30MPH	BACK OF FOOTPATH	300	SINGLE ARM	NOT APPLICABLE	RIGID COLUMN	URBIS	AXIA 2 S1	MALLATITE	TUBULAR STEEL	6	GALVANISED	STEPPED TUBULAR
46102086	WEST COMMON GARDENS	Scunthorpe	488971.5	409018.51	19	7018	00201139	01/04/2001 00:00	5	4	LESS THAN 30MPH	BACK OF FOOTPATH	300	SINGLE ARM	NOT APPLICABLE	RIGID COLUMN	URBIS	AXIA 2 S1	MALLATITE	TUBULAR STEEL	6	GALVANISED	STEPPED TUBULAR
46102086	WEST COMMON GARDENS	Scunthorpe	488942.33	409464.43	2	7001	00201122	01/04/2001 00:00	5	4	LESS THAN 30MPH	BACK OF FOOTPATH	300	SINGLE ARM	NOT APPLICABLE	RIGID COLUMN	URBIS	AXIA 2 S1	MALLATITE	TUBULAR STEEL	6	GALVANISED	STEPPED TUBULAR
46102086	WEST COMMON GARDENS	Scunthorpe	488946.18	409014.97	20	7019	00201140	01/04/2001 00:00	5	4	LESS THAN 30MPH	BACK OF FOOTPATH	300	SINGLE ARM	NOT APPLICABLE	RIGID COLUMN	URBIS	AXIA 2 S1	MALLATITE	TUBULAR STEEL	6	GALVANISED	STEPPED TUBULAR
46102086	WEST COMMON GARDENS	Scunthorpe	488917.53	409022.71	21	7020	00201141	01/04/2001 00:00	5	4	LESS THAN 30MPH	BACK OF FOOTPATH	300	SINGLE ARM	NOT APPLICABLE	RIGID COLUMN	URBIS	AXIA 2 S1	MALLATITE	TUBULAR STEEL	6	GALVANISED	STEPPED TUBULAR
46102086	WEST COMMON GARDENS	Scunthorpe	488889.47	409006.77	22	7021	00201142	01/04/2001 00:00	5	4	LESS THAN 30MPH	BACK OF FOOTPATH	300	SINGLE ARM	NOT APPLICABLE	RIGID COLUMN	URBIS	AXIA 2 S1	MALLATITE	TUBULAR STEEL	6	GALVANISED	STEPPED TUBULAR
46102086	WEST COMMON GARDENS	Scunthorpe	488863.65	409015.3	23	7022	00201143	01/04/2001 00:00	5	4	LESS THAN 30MPH	BACK OF FOOTPATH	300	SINGLE ARM	NOT APPLICABLE	RIGID COLUMN	URBIS	AXIA 2 S1	MALLATITE	TUBULAR STEEL	6	GALVANISED	STEPPED TUBULAR
46102086	WEST COMMON GARDENS	Scunthorpe	488837.16	409011.77	24	7023	00201144	01/04/2001 00:00	5	4	LESS THAN 30MPH	BACK OF FOOTPATH	300	SINGLE ARM	NOT APPLICABLE	RIGID COLUMN	URBIS	AXIA 2 S1	MALLATITE	TUBULAR STEEL	6	GALVANISED	STEPPED TUBULAR
46102086	WEST COMMON GARDENS	Scunthorpe	488809.44	409007.68	25	7024	00201145	01/04/2001 00:00	5	4	LESS THAN 30MPH	BACK OF FOOTPATH	300	SINGLE ARM	NOT APPLICABLE	RIGID COLUMN	URBIS	AXIA 2 S1	MALLATITE	TUBULAR STEEL	6	GALVANISED	STEPPED TUBULAR
46102086	WEST COMMON GARDENS	Scunthorpe	488784.76	408992.23	26	7025	00201146	01/04/2001 00:00	5	4	LESS THAN 30MPH	BACK OF FOOTPATH	300	SINGLE ARM	NOT APPLICABLE	RIGID COLUMN	URBIS	AXIA 2 S1	MALLATITE	TUBULAR STEEL	6	GALVANISED	STEPPED TUBULAR
46102086	WEST COMMON GARDENS	Scunthorpe	488750.84	408999.61	27	7026	00201147	01/04/2001 00:00	5	4	LESS THAN 30MPH	BACK OF FOOTPATH	300	SINGLE ARM	NOT APPLICABLE	RIGID COLUMN	URBIS	AXIA 2 S1	MALLATITE	TUBULAR STEEL	6	GALVANISED	STEPPED TUBULAR
46102086	WEST COMMON GARDENS	Scunthorpe	488958.9	409440.79	3	7002	00201123	01/04/2001 00:00	5	4	LESS THAN 30MPH	BACK OF FOOTPATH	300	SINGLE ARM	NOT APPLICABLE	RIGID COLUMN	URBIS	AXIA 2 S1	MALLATITE	TUBULAR STEEL	6	GALVANISED	STEPPED TUBULAR
46102086	WEST COMMON GARDENS	Scunthorpe	488960.48	409401	4	7003	00201124	01/04/2001 00:00	5	4	LESS THAN 30MPH	BACK OF FOOTPATH	300	SINGLE ARM	NOT APPLICABLE	RIGID COLUMN	URBIS	AXIA 2 S1	MALLATITE	TUBULAR STEEL	6	GALVANISED	STEPPED TUBULAR
46102086	WEST COMMON GARDENS	Scunthorpe	488968.24	409369.83	5	7004	00201125	01/04/2001 00:00	5	4	LESS THAN 30MPH	BACK OF FOOTPATH	300	SINGLE ARM	NOT APPLICABLE	RIGID COLUMN	URBIS	AXIA 2 S1	MALLATITE	TUBULAR STEEL	6	GALVANISED	STEPPED TUBULAR
46102086	WEST COMMON GARDENS	Scunthorpe	488973.17	409346.1	6	7005	00201126	01/04/2001 00:00	5	4	LESS THAN 30MPH	BACK OF FOOTPATH	300	SINGLE ARM	NOT APPLICABLE	RIGID COLUMN	URBIS	AXIA 2 S1	MALLATITE	TUBULAR STEEL	6	GALVANISED	STEPPED TUBULAR
46102086	WEST COMMON GARDENS	Scunthorpe	488990.33	409312.7	7	7006	00201127	01/04/2001 00:00	5	4	LESS THAN 30MPH	BACK OF FOOTPATH	300	SINGLE ARM	NOT APPLICABLE	RIGID COLUMN	URBIS	AXIA 2 S1	MALLATITE	TUBULAR STEEL	6	GALVANISED	STEPPED TUBULAR
46102086	WEST COMMON GARDENS	Scunthorpe	488987.29	409275.37	8	7007	00201128	01/04/2001 00:00	5	4	LESS THAN 30MPH	BACK OF FOOTPATH	300	SINGLE ARM	NOT APPLICABLE	RIGID COLUMN	URBIS	AXIA 2 S1	MALLATITE	TUBULAR STEEL	6	GALVANISED	STEPPED TUBULAR
46102086	WEST COMMON GARDENS	Scunthorpe	488990.26	409250.37	9	7008	00201129	01/04/2001 00:00	5	4	LESS THAN 30MPH	BACK OF FOOTPATH	300	SINGLE ARM	NOT APPLICABLE	RIGID COLUMN	URBIS	AXIA 2 S1	MALLATITE	TUBULAR STEEL	6	GALVANISED	STEPPED TUBULAR
46102087	WEST COMMON LANE	Scunthorpe	489065.61	409553.75	1	7000	00201148	01/04/1992 00:00	5	4	LESS THAN 30MPH	BACK OF FOOTPATH	1500	SINGLE ARM	LIGHT GREY	RIGID COLUMN	URBIS	AXIA 2 S1	PETITJEAN	SHEET STEEL	12	PAINTED	THAMES
46102087	WEST COMMON LANE	Scunthorpe	488770.85	409454.9	10	7011	00201159	01/04/1992 00:00	5	4	LESS THAN 30MPH	BACK OF FOOTPATH	1250	SINGLE ARM	LIGHT GREY	RIGID COLUMN	URBIS	AXIA 2 S1	PETITJEAN	SHEET STEEL	10	PAINTED	THAMES
46102087	WEST COMMON LANE	Scunthorpe	488732.46	409461.06	11FP	7012	00201160	01/04/1992 00:00	5	4	LESS THAN 30MPH	BACK OF FOOTPATH	1250	SINGLE ARM	LIGHT GREY	RIGID COLUMN	URBIS	AXIA 2 S1	PETITJEAN	SHEET STEEL	10	PAINTED	THAMES
46102087	WEST COMMON LANE	Scunthorpe	488704.26	409442.95	12	7013	00201161	01/04/1992 00:00	5	4	LESS THAN 30MPH	BACK OF FOOTPATH	1250	SINGLE ARM	LIGHT GREY	RIGID COLUMN	URBIS	AXIA 2 S1	PETITJEAN	SHEET STEEL	10	PAINTED	THAMES
46102087	WEST COMMON LANE	Scunthorpe	488672.79	409450.67	13	7014	00201162	01/04/1992 00:00	5	4	LESS THAN 30MPH	BACK OF FOOTPATH	1250	SINGLE ARM	LIGHT GREY	RIGID COLUMN	URBIS	AXIA 2 S1	PETITJEAN	SHEET STEEL	10	PAINTED	THAMES
46102087	WEST COMMON LANE	Scunthorpe	488649.47	409431.76	14FP	7015	00201163	01/04/1992 00:00	5	4	LESS THAN 30MPH	BACK OF FOOTPATH	1250	SINGLE ARM	LIGHT GREY	RIGID COLUMN	URBIS	AXIA 2 S1	PETITJEAN	SHEET STEEL	10	PAINTED	THAMES
46102087	WEST COMMON LANE	Scunthorpe	488610.62	409437.92	15	7016	00201164	01/04/1992 00:00	5	4	LESS THAN 30MPH	BACK OF FOOTPATH	1250	SINGLE ARM	LIGHT GREY	RIGID COLUMN	URBIS	AXIA 2 S1	PETITJEAN	SHEET STEEL	10	PAINTED	THAMES
46102087	WEST COMMON LANE	Scunthorpe	488583.21	409418.07	16	7017	00201165	01/04/1992 00:00	5	4	LESS THAN 30MPH	BACK OF FOOTPATH	1250	SINGLE ARM	LIGHT GREY	RIGID COLUMN	URBIS	AXIA 2 S1	PETITJEAN	SHEET STEEL	10	PAINTED	THAMES
46102087	WEST COMMON LANE	Scunthorpe	488550.34	409410.3	17FP	7018	00201166	01/04/1992 00:00	5	4	LESS THAN 30MPH	BACK OF FOOTPATH	1250	SINGLE ARM	LIGHT GREY	RIGID COLUMN	URBIS	AXIA 2 S1	PETITJEAN	SHEET STEEL	10	PAINTED	THAMES
46102087	WEST COMMON LANE	Scunthorpe	488512.89	409416.77	18FP	7019	00201167	01/04/1992 00:00	5	4	LESS THAN 30MPH	BACK OF FOOTPATH	500	SINGLE ARM	NOT APPLICABLE	RIGID COLUMN	URBIS	AXIA 2 S1	PETITJEAN	SHEET STEEL	10	GALVANISED	THAMES
46102087	WEST COMMON LANE	Scunthorpe	488493.67	409399.76	19FP	7020	00201168	01/04/1992 00:00	5	4	LESS THAN 30MPH	BACK OF FOOTPATH	500	SINGLE ARM	NOT APPLICABLE	RIGID COLUMN	URBIS	AXIA 2 S1	PETITJEAN	SHEET STEEL	10	GALVANISED	THAMES
46102087	WEST COMMON LANE	Scunthorpe	488252.8	409434.4	1BB	7001	00201149	01/04/2013 00:00	2	2	LESS THAN 30MPH	FRONT OF FOOTPATH	0	POST TOP	BLACKWHITE	RIGID COLUMN	WRTL	STELA WIDE 52 LED	MALLATITE	TUBULAR STEEL	6	GALVANISED	TUBULAR
46102087	WEST COMMON LANE	Scunthorpe	489034.59	409557.11	2	7002	00201150	01/04/1992 00:00	5	4	LESS THAN 30MPH	BACK OF FOOTPATH	1500	SINGLE ARM	LIGHT GREY	RIGID COLUMN	URBIS	AXIA 2 S1	PETITJEAN	SHEET STEEL	12	PAINTED	THAMES
46102087	WEST COMMON LANE	Scunthorpe	488470.65	409412.77	20	7021	00201169	01/04/1992 00:00	5	4	LESS THAN 30MPH	FRONT OF FOOTPATH	500	SINGLE ARM	NOT APPLICABLE	RIGID COLUMN	URBIS	AXIA 2 S1	PETITJEAN	SHEET STEEL	10	GALVANISED	THAMES
46102087	WEST COMMON LANE	Scunthorpe	488443.15	409397.74	21	7022	00201170	01/04/1992 00:00	5	4	LESS THAN 30MPH	BACK OF FOOTPATH	500	SINGLE ARM	NOT APPLICABLE	RIGID COLUMN	URBIS	AXIA 2 S1	PETITJEAN	SHEET STEEL	10	GALVANISED	THAMES
46102087	WEST COMMON LANE	Scunthorpe	488411.64	409404.36	22	7023	00201171	01/04/2012 00:00	5	4	LESS THAN 30MPH	BACK OF FOOTPATH	1000	SINGLE ARM	NOT APPLICABLE	RIGID COLUMN	URBIS	AXIA 2 S1	VALMONT ST	SHEET STEEL	10	GALVANISED	THAMES
46102087	WEST COMMON LANE	Scunthorpe	488382.76	409423.02	23	7024	00201172	01/04/1992 00:00	5	4	LESS THAN 30MPH	FRONT OF FOOTPATH	2000	SINGLE ARM	NOT APPLICABLE	RIGID COLUMN	URBIS	AXIA 2 S1	PETITJEAN	SHEET STEEL	10	GALVANISED	THAMES
46102087	WEST COMMON LANE	Scunthorpe	488346.78	409419.22	24	7025	00201173	01/04/2012 00:00	5	4	LESS THAN 30MPH	BACK OF FOOTPATH	1000	SINGLE ARM	NOT APPLICABLE	RIGID COLUMN	URBIS	AXIA 2 S1	VALMONT ST	SHEET STEEL	10	GALVANISED	THAMES
46102087	WEST COMMON LANE	Scunthorpe	488315.29	409440.42	25	7026	00201174	01/04/1992 00:00	5	4	LESS THAN 30MPH	FRONT OF FOOTPATH	2000	SINGLE ARM	NOT APPLICABLE	RIGID COLUMN	URBIS	AXIA 2 S1	PETITJEAN	SHEET STEEL	10	GALVANISED	THAMES
46102087	WEST COMMON LANE	Scunthorpe	488277.03	409433.23	26FP	7027	00201175	01/04/2012 00:00	5	4	LESS THAN 30MPH	BACK OF FOOTPATH	1000	SINGLE ARM	NOT APPLICABLE	RIGID COLUMN	URBIS	AXIA 2 S1	VALMONT ST	SHEET STEEL	10	GALVANISED	THAMES
46102087	WEST COMMON LANE	Scunthorpe	488247.38	409448.8	27	7028	00201176	01/04/2012 00:00	5	4	LESS THAN 30MPH	VERGE	1000	SINGLE ARM	NOT APPLICABLE	RIGID COLUMN	URBIS	AXIA 2 S1	V

46102095	WHARF ROAD	Crowle Parish	477382.91	412584.81	28	7027	00201337	01/04/1999 00:00	5	1	LESS THAN 30MPH	BACK OF FOOTPATH	1000	SINGLE ARM	NOT APPLICABLE	RIGID COLUMN	URBIS	AXIA 2 S1	PETITJEAN	SHEET STEEL	8	GALVANISED	THAMES
46102095	WHARF ROAD	Crowle Parish	477373.5	412606.86	29	7028	00201338	01/04/1999 00:00	5	1	LESS THAN 30MPH	BACK OF FOOTPATH	1000	SINGLE ARM	NOT APPLICABLE	RIGID COLUMN	URBIS	AXIA 2 S1	PETITJEAN	SHEET STEEL	8	GALVANISED	THAMES
46102095	WHARF ROAD	Crowle Parish	477885	411942.27	3	7002	00201312	01/04/1999 00:00	5	1	LESS THAN 30MPH	BACK OF FOOTPATH	1000	SINGLE ARM	NOT APPLICABLE	RIGID COLUMN	URBIS	AXIA 2 S1	PETITJEAN	SHEET STEEL	8	GALVANISED	THAMES
46102095	WHARF ROAD	Crowle Parish	477847.02	411954.79	4	7003	00201313	01/04/1999 00:00	5	1	LESS THAN 30MPH	BACK OF FOOTPATH	1000	SINGLE ARM	NOT APPLICABLE	RIGID COLUMN	URBIS	AXIA 2 S1	PETITJEAN	SHEET STEEL	8	GALVANISED	THAMES
46102095	WHARF ROAD	Crowle Parish	477816.08	411979.08	5	7004	00201314	01/04/1999 00:00	5	1	LESS THAN 30MPH	BACK OF FOOTPATH	1000	SINGLE ARM	NOT APPLICABLE	RIGID COLUMN	URBIS	AXIA 2 S1	PETITJEAN	SHEET STEEL	8	GALVANISED	THAMES
46102095	WHARF ROAD	Crowle Parish	477786.73	412003.93	6	7005	00201315	01/04/1999 00:00	5	1	LESS THAN 30MPH	BACK OF FOOTPATH	1000	SINGLE ARM	NOT APPLICABLE	RIGID COLUMN	URBIS	AXIA 2 S1	PETITJEAN	SHEET STEEL	8	GALVANISED	THAMES
46102095	WHARF ROAD	Crowle Parish	477766	412030.07	7	7006	00201316	01/04/1999 00:00	5	1	LESS THAN 30MPH	BACK OF FOOTPATH	1000	SINGLE ARM	NOT APPLICABLE	RIGID COLUMN	URBIS	AXIA 2 S1	PETITJEAN	SHEET STEEL	8	GALVANISED	THAMES
46102095	WHARF ROAD	Crowle Parish	477755.78	412064.21	8	7007	00201317	01/04/1999 00:00	5	1	LESS THAN 30MPH	BACK OF FOOTPATH	1000	SINGLE ARM	NOT APPLICABLE	RIGID COLUMN	URBIS	AXIA 2 S1	PETITJEAN	SHEET STEEL	8	GALVANISED	THAMES
46102095	WHARF ROAD	Crowle Parish	477739.26	412095.84	9	7008	00201318	01/04/1999 00:00	5	1	LESS THAN 30MPH	BACK OF FOOTPATH	1000	SINGLE ARM	NOT APPLICABLE	RIGID COLUMN	URBIS	AXIA 2 S1	PETITJEAN	SHEET STEEL	8	GALVANISED	THAMES
46102096	WHEATFIELD CLOSE	Epworth Parish	478976.17	403757.03	1	7000	00201339	01/04/1995 00:00	5	3	LESS THAN 30MPH	BACK OF FOOTPATH	0	POST TOP	NOT APPLICABLE	RIGID COLUMN	URBIS	AXIA 2 S1	MALLATITE	TUBULAR STEEL	5	GALVANISED	STEPPED TUBULAR
46102096	WHEATFIELD CLOSE	Epworth Parish	479003.3	403770.28	2	7001	00201340	01/04/1995 00:00	5	3	LESS THAN 30MPH	VERGE	0	POST TOP	NOT APPLICABLE	RIGID COLUMN	URBIS	AXIA 2 S1	MALLATITE	TUBULAR STEEL	5	GALVANISED	STEPPED TUBULAR
46102096	WHEATFIELD CLOSE	Epworth Parish	478979.98	403773.56	3	7002	00201341	01/04/1995 00:00	5	3	LESS THAN 30MPH	VERGE	0	POST TOP	NOT APPLICABLE	RIGID COLUMN	URBIS	AXIA 2 S1	MALLATITE	TUBULAR STEEL	5	GALVANISED	STEPPED TUBULAR
46102096	WHEATFIELD CLOSE	Epworth Parish	478980.4	403802.74	4	7003	00201342	01/04/1995 00:00	5	3	LESS THAN 30MPH	VERGE	0	POST TOP	NOT APPLICABLE	RIGID COLUMN	URBIS	AXIA 2 S1	MALLATITE	TUBULAR STEEL	5	GALVANISED	STEPPED TUBULAR
46102096	WHEATFIELD CLOSE	Epworth Parish	478977.78	403829.49	5	7004	00201343	01/04/1995 00:00	5	3	LESS THAN 30MPH	VERGE	0	POST TOP	NOT APPLICABLE	RIGID COLUMN	URBIS	AXIA 2 S1	MALLATITE	TUBULAR STEEL	5	GALVANISED	STEPPED TUBULAR
46102097	WILLOUGHBY ROAD	Scunthorpe	488444.98	408568.11	1	7000	00201344	01/04/2002 00:00	3	4	LESS THAN 30MPH	BACK OF FOOTPATH	1500	SINGLE ARM	NOT APPLICABLE	RIGID COLUMN	URBIS	AXIA 2 S1	PETITJEAN	SHEET STEEL	10	GALVANISED	THAMES
46102097	WILLOUGHBY ROAD	Scunthorpe	488551.29	408275.46	1	7036	00201380	14/07/2021 00:00	3	4	NOT ON A ROAD	BACK OF FOOTPATH	0	POST TOP	NOT APPLICABLE	MID HINGED	URBIS	AXIA 2 S1	MALLATITE	TUBULAR STEEL	6	GALVANISED	LEVEN
46102097	WILLOUGHBY ROAD	Scunthorpe	488497.37	408296.8	10	7009	00201353	01/04/2010 00:00	3	4	LESS THAN 30MPH	FRONT OF FOOTPATH	500	SINGLE ARM	NOT APPLICABLE	RIGID COLUMN	URBIS	AXIA 2 S1	VALMONT ST	SHEET STEEL	8	GALVANISED	THAMES
46102097	WILLOUGHBY ROAD	Scunthorpe	488493.22	408270.36	11	7010	00201354	01/04/1985 00:00	3	4	LESS THAN 30MPH	BACK OF FOOTPATH	800	SINGLE ARM	NOT APPLICABLE	RIGID COLUMN	URBIS	AXIA 2 S1	PETITJEAN	SHEET STEEL	8	GALVANISED	THAMES
46102097	WILLOUGHBY ROAD	Scunthorpe	488510	408239.24	12	7011	00201355	24/03/2021 00:00	3	4	LESS THAN 30MPH	BACK OF FOOTPATH	500	SINGLE ARM	NOT APPLICABLE	RIGID COLUMN	URBIS	AXIA 2 S1	MALLATITE	TUBULAR STEEL	8	GALVANISED	TUBULAR
46102097	WILLOUGHBY ROAD	Scunthorpe	488498.24	408210.96	13FP	7012	00201356	01/04/2003 00:00	3	4	LESS THAN 30MPH	BACK OF FOOTPATH	1250	SINGLE ARM	NOT APPLICABLE	RIGID COLUMN	URBIS	AXIA 2 S1	PETITJEAN	SHEET STEEL	8	GALVANISED	THAMES
46102097	WILLOUGHBY ROAD	Scunthorpe	488491.63	408183.81	14	7013	00201357	01/04/2006 00:00	3	4	LESS THAN 30MPH	FRONT OF FOOTPATH	800	SINGLE ARM	NOT APPLICABLE	RIGID COLUMN	URBIS	AXIA 2 S1	PETITJEAN	SHEET STEEL	8	GALVANISED	THAMES
46102097	WILLOUGHBY ROAD	Scunthorpe	488482.45	408163.38	15	7014	00201358	01/04/2006 00:00	3	4	LESS THAN 30MPH	FRONT OF FOOTPATH	800	SINGLE ARM	NOT APPLICABLE	RIGID COLUMN	URBIS	AXIA 2 S1	PETITJEAN	SHEET STEEL	8	GALVANISED	THAMES
46102097	WILLOUGHBY ROAD	Scunthorpe	488481.58	408134.73	16	7015	00201359	01/04/2006 00:00	3	4	LESS THAN 30MPH	VERGE	1500	DOUBLE ARM	NOT APPLICABLE	RIGID COLUMN	URBIS	AXIA 2 S1	PETITJEAN	SHEET STEEL	8	GALVANISED	THAMES
46102097	WILLOUGHBY ROAD	Scunthorpe	488486.47	408100.67	17	7016	00201360	01/04/2006 00:00	3	4	LESS THAN 30MPH	VERGE	1500	DOUBLE ARM	NOT APPLICABLE	RIGID COLUMN	URBIS	AXIA 2 S1	PETITJEAN	SHEET STEEL	8	GALVANISED	THAMES
46102097	WILLOUGHBY ROAD	Scunthorpe	488485.76	408073.51	18	7017	00201361	01/04/2006 00:00	3	4	LESS THAN 30MPH	FRONT OF FOOTPATH	800	SINGLE ARM	NOT APPLICABLE	RIGID COLUMN	URBIS	AXIA 2 S1	PETITJEAN	SHEET STEEL	8	GALVANISED	THAMES
46102097	WILLOUGHBY ROAD	Scunthorpe	488495.17	408046.65	19	7018	00201362	01/04/2006 00:00	3	4	LESS THAN 30MPH	FRONT OF FOOTPATH	800	SINGLE ARM	NOT APPLICABLE	RIGID COLUMN	URBIS	AXIA 2 S1	PETITJEAN	SHEET STEEL	8	GALVANISED	THAMES
46102097	WILLOUGHBY ROAD	Scunthorpe	488756.75	407775.67	1X	7037	00201381	26/07/2021 00:00	3	4	LESS THAN 30MPH	BACK OF FOOTPATH	500	SINGLE ARM	NOT APPLICABLE	RIGID COLUMN	URBIS	AXIA 2 S1	MALLATITE	TUBULAR STEEL	8	GALVANISED	TUBULAR
46102097	WILLOUGHBY ROAD	Scunthorpe	488437.03	408537.42	2	7001	00201345	01/04/2003 00:00	3	4	LESS THAN 30MPH	BACK OF FOOTPATH	1500	SINGLE ARM	NOT APPLICABLE	RIGID COLUMN	URBIS	AXIA 2 S1	PETITJEAN	SHEET STEEL	8	GALVANISED	THAMES
46102097	WILLOUGHBY ROAD	Scunthorpe	488501.57	408097.33	20	7019	00201363	01/04/2005 00:00	3	4	LESS THAN 30MPH	FRONT OF FOOTPATH	1000	SINGLE ARM	BLACK	RIGID COLUMN	URBIS	SATURN	URBIS	TUBULAR STEEL	8	PAINTED	STEPPED TUBULAR
46102097	WILLOUGHBY ROAD	Scunthorpe	488511.6	408066.61	21	7020	00201364	01/04/2005 00:00	3	4	LESS THAN 30MPH	FRONT OF FOOTPATH	1000	SINGLE ARM	BLACK	RIGID COLUMN	URBIS	SATURN	URBIS	TUBULAR STEEL	8	PAINTED	STEPPED TUBULAR
46102097	WILLOUGHBY ROAD	Scunthorpe	488510.42	408027.3	22	7021	00201365	01/04/2006 00:00	3	4	LESS THAN 30MPH	VERGE	1500	DOUBLE ARM	NOT APPLICABLE	RIGID COLUMN	URBIS	AXIA 2 S1	PETITJEAN	SHEET STEEL	8	GALVANISED	THAMES
46102097	WILLOUGHBY ROAD	Scunthorpe	488522.56	407997.58	23	7022	00201366	01/04/2006 00:00	3	4	LESS THAN 30MPH	VERGE	1500	DOUBLE ARM	NOT APPLICABLE	RIGID COLUMN	URBIS	AXIA 2 S1	PETITJEAN	SHEET STEEL	8	GALVANISED	THAMES
46102097	WILLOUGHBY ROAD	Scunthorpe	488531.51	407972.44	24	7023	00201367	01/04/2006 00:00	3	4	LESS THAN 30MPH	VERGE	1500	DOUBLE ARM	NOT APPLICABLE	RIGID COLUMN	URBIS	AXIA 2 S1	PETITJEAN	SHEET STEEL	8	GALVANISED	THAMES
46102097	WILLOUGHBY ROAD	Scunthorpe	488549.73	407942.24	25	7024	00201368	01/04/2006 00:00	3	4	LESS THAN 30MPH	FRONT OF FOOTPATH	800	SINGLE ARM	NOT APPLICABLE	RIGID COLUMN	URBIS	AXIA 2 S1	PETITJEAN	SHEET STEEL	8	GALVANISED	THAMES
46102097	WILLOUGHBY ROAD	Scunthorpe	488533.56	407938.73	26	7025	00201369	01/04/2006 00:00	3	4	LESS THAN 30MPH	BACK OF FOOTPATH	800	SINGLE ARM	NOT APPLICABLE	RIGID COLUMN	URBIS	AXIA 2 S1	PETITJEAN	SHEET STEEL	8	GALVANISED	THAMES
46102097	WILLOUGHBY ROAD	Scunthorpe	488552.57	407907.14	27	7026	00201370	01/04/2006 00:00	3	4	LESS THAN 30MPH	FRONT OF FOOTPATH	800	SINGLE ARM	NOT APPLICABLE	RIGID COLUMN	URBIS	AXIA 2 S1	PETITJEAN	SHEET STEEL	8	GALVANISED	THAMES
46102097	WILLOUGHBY ROAD	Scunthorpe	488562.04	407891.23	28FP	7027	00201371	01/04/2003 00:00	3	4	LESS THAN 30MPH	BACK OF FOOTPATH	1250	SINGLE ARM	NOT APPLICABLE	RIGID COLUMN	URBIS	AXIA 2 S1	PETITJEAN	SHEET STEEL	8	GALVANISED	THAMES
46102097	WILLOUGHBY ROAD	Scunthorpe	488581.09	407884.25	29FP	7028	00201372	01/04/2003 00:00	3	4	LESS THAN 30MPH	BACK OF FOOTPATH	1250	SINGLE ARM	NOT APPLICABLE	RIGID COLUMN	URBIS	AXIA 2 S1	PETITJEAN	SHEET STEEL	8	GALVANISED	THAMES
46102097	WILLOUGHBY ROAD	Scunthorpe	488784.91	407760.91	2X	7038	00201382	26/07/2021 00:00	3	4	LESS THAN 30MPH	VERGE	500	SINGLE ARM	NOT APPLICABLE	RIGID COLUMN	URBIS	AXIA 2 S1	MALLATITE	TUBULAR STEEL	8	GALVANISED	TUBULAR
46102097	WILLOUGHBY ROAD	Scunthorpe	488452.67	408505.99	3	7002	00201346	01/04/2012 00:00	3	4	LESS THAN 30MPH	BACK OF FOOTPATH	1000	SINGLE ARM	NOT APPLICABLE	RIGID COLUMN	URBIS	AXIA 2 S1	VALMONT ST	SHEET STEEL	8	GALVANISED	THAMES
46102097	WILLOUGHBY ROAD	Scunthorpe	488579.83	407866.12	30FP	7029	00201373	01/04/2003 00:00	3	4	LESS THAN 30MPH	BACK OF FOOTPATH	1250	SINGLE ARM	NOT APPLICABLE	RIGID COLUMN	URBIS	AXIA 2 S1	PETITJEAN	SHEET STEEL	8	GALVANISED	THAMES
46102097	WILLOUGHBY ROAD	Scunthorpe	488591.06	407856.24	31	7030	00201374	24/03/2021 00:00	3	4	LESS THAN 30MPH	BACK OF FOOTPATH	500	SINGLE ARM	NOT APPLICABLE	RIGID COLUMN	URBIS	AXIA 2 S1	MALLATITE	TUBULAR STEEL	8	GALVANISED	TUBULAR
46102097	WILLOUGHBY ROAD	Scunthorpe	488617.46	407840.02	32	7031	00201375	24/03/2021 00:00	3	4	LESS THAN 30MPH	BACK OF FOOTPATH	500	SINGLE ARM	NOT APPLICABLE	RIGID COLUMN	URBIS	AXIA 2 S1	MALLATITE	TUBULAR STEEL	8	GALVANISED	TUBULAR
46102097	WILLOUGHBY ROAD	Scunthorpe	488640.06	407812.09	33	7032	00201376	24/03/2021 00:00	3	4	LESS THAN 30MPH	BACK OF FOOTPATH	500	SINGLE ARM	NOT APPLICABLE	RIGID COLUMN	URBIS	AXIA 2 S1	MALLATITE	TUBULAR STEEL	8	GALVANISED	TUBULAR
46102097	WILLOUGHBY ROAD	Scunthorpe	488674	407800.06	34	7033	00201377	24/03/2021 00:00	3	4	LESS THAN 30MPH	BACK OF FOOTPATH	500	SINGLE ARM	NOT APPLICABLE	RIGID COLUMN	URBIS	AXIA 2 S1	MALLATITE	TUBULAR STEEL	8	GALVANISED	TUBULAR
46102097	WILLOUGHBY ROAD	Scunthorpe	488701.4	407777.69	35	7034	00201378	24/03/2021 00:00	3	4	LESS THAN 30MPH	BACK OF FOOTPATH	500	SINGLE ARM	NOT APPLICABLE	RIGID COLUMN	URBIS	AXIA 2 S1	MALLATITE	TUBULAR STEEL	8	GALVANISED	TUBULAR
46102097	WILLOUGHBY ROAD	Scunthorpe	488734.2	407771.12	36	7035	00201379	24/03/2021 00:00	3	4	LESS THAN 30MPH	BACK OF FOOTPATH	500	SINGLE ARM	NOT APPLICABLE	RIGID COLUMN	URBIS	AXIA 2 S1	MALLATITE	TUBULAR STEEL	8	GALVANISED	TUBULAR
46102097	WILLOUGHBY ROAD	Scunthorpe	488772.26	407731.26	3X	7039	00201383	26/07/2021 00:00	3	4	LESS THAN 30MPH	VERGE	500	SINGLE ARM	NOT APPLICABLE	RIGID COLUMN	URBIS	AXIA 2 S1	MALLATITE	TUBULAR STEEL	8	GALVANISED	TUBULAR
46102097	WILLOUGHBY ROAD	Scunthorpe	488450.54	408470.94	4	7003	00201347	01/04/2012 00:00	3	4	LESS THAN 30MPH	BACK OF FOOTPATH	1000	SINGLE ARM	NOT APPLICABLE	RIGID COLUMN	URBIS	AXIA 2 S1	VALMONT ST	SHEET STEEL	8	GALVANISED	THAMES
46102097	WILLOUGHBY ROAD	Scunthorpe	488739.82	407744.78	4X	7040	00201384	26/07/2021 00:00	3	4	LESS THAN 30MPH	BACK OF FOOTPATH	500	SINGLE ARM	NOT APPLICABLE	RIGID COLUMN	URBIS	AXIA 2 S1	MALLATITE	TUBULAR STEEL	8	GALVANISED	TUBULAR
46102097	WILLOUGHBY ROAD	Scunthorpe	488466.78	408438.08	5	7004	00201348	24/03/2021 00:00	3	4	LESS THAN 30MPH	BACK OF FOOTPATH	500	SINGLE ARM	NOT APPLICABLE	RIGID COLUMN	URBIS	AXIA 2 S1	MALLATITE	TUBULAR STEEL	8	GALVANISED	TUBULAR
46102097	WILLOUGHBY ROAD	Scunthorpe	488471.77	408414.91	6	7005	00201349	01/04/2012 00:00	3	4	LESS THAN 30MPH	BACK OF FOOTPATH	1000	SINGLE ARM	NOT APPLICABLE	RIGID COLUMN	URBIS	AXIA 2 S1	VALMONT ST	SHEET STEEL	8	NOT APPLICABI	THAMES
46102097	WILLOUGHBY ROAD	Scunthorpe	488468.37	408389.97	7	7006	00201350	01/04/2012 00:00	3	4	LESS THAN 30MPH	BACK OF FOOTPATH	1000	SINGLE ARM	NOT APPLICABLE	RIGID COLUMN	URBIS	AXIA 2 S1	VALMONT ST	SHEET STEEL	8	GALVANISED	THAMES
46102097	WILLOUGHBY ROAD	Scunthorpe	488483.97	408360.07	8	7007	00201351	24/03/2021 00:00	3	4	LESS THAN 30MPH	BACK OF FOOTPATH	500	SINGLE ARM	NOT APPLICABLE	RIGID COLUMN	URBIS	AXIA 2 S1	MALLATITE	TUBULAR STEEL	8	GALVANISED	TUBULAR
46102097	WILLOUGHBY ROAD	Scunthorpe	488483.77	408321.74	9	7008	00201352	01/04/2012 00:00	3	4	LESS THAN 30MPH	BACK OF FOOTPATH	1000	SINGLE ARM	NOT APPLICABLE	RIGID COLUMN	URBIS	AXIA 2 S1	VALMONT ST	SHEET STEEL	8	GALVANISED	THAMES
46102098	WILTSHIRE AVENUE	Burton upon Stather Parish	487508.42	417965.71	1	7000	00201386	01/04/1980 00:00	2	3	LESS THAN 30MPH	VERGE	0	POST TOP	NOT APPLICABLE	RIGID COLUMN	URBIS	AXIA 2 S1	PETITJEAN	SHEET STEEL	5	GALVANISED	NIDD
46102098	WILTSHIRE AVENUE	Burton upon Stather Parish	487367.22	417721.47	10	7009	00201395	01/04/1980 00:00	2	3	LESS THAN 30MPH	FRONT OF FOOTPATH	0	POST TOP	NOT APPLICABLE	RIGID COLUMN	URBIS	AXIA 2 S1	PETITJEAN	SHEET STEEL	5	GALVANISED	NIDD
46102098	WILTSHIRE AVENUE	Burton upon Stather Parish	487371.88	417688.58	11	7010	00201396	01/04/1980 00:00	2	3	LESS THAN 30MPH	BACK OF FOOTPATH	0	POST TOP	NOT APPLICABLE	RIGID COLUMN	URBIS	AXIA 2 S1	PETITJEAN	SHEET STEEL	5	GALVANISED	NIDD
46102098	WILTSHIRE AVENUE	Burton upon Stather Parish	487369.71	417660.1	12	7011	00201397	12/12/2018 00:00	2	3	LESS THAN 30MPH	FRONT OF FOOTPATH	0	POST TOP	NOT APPLICABLE	RIGID COLUMN	URBIS	AXIA 2 S1	MALLATITE	TUBULAR STEEL	6	GALVANISED	TUBULAR
46102098	WILTSHIRE AVENUE	Burton upon Stather Parish	487356.2	417617.65	13	7012	00201398	01/04/1980 00:00	2	3	LESS THAN 30MPH	FRONT OF FOOTPATH	0	POST TOP	MID GREY	RIGID COLUMN	URBIS	AXIA 2 S1	PETITJEAN	SHEET STEEL	5	PAINTED	NIDD
46102098	WILTSHIRE AVENUE	Burton upon Stather Parish	487351.63	417588.88	14	7013	00201399	01/04/1980 00:00	2	3	LESS THAN 30MPH	BACK OF FOOTPATH	0	POST TOP	NOT APPLICABLE	RIGID COLUMN	URBIS	AXIA 2 S1	PETITJEAN	SHEET STEEL	5	GALVANISED	NIDD
46102098	WILTSHIRE AVENUE	Burton upon Stather Parish	487348.1	417555.51	15	7014	00201400	01/04/1980 00:00	2	3	LESS THAN 30MPH	BACK OF FOOTPATH	0	POST TOP	NOT APPLICABLE	RIGID COLUMN	URBIS	AXIA 2 S1	MALLATITE	TUBULAR STEEL	5	GALVANISED	STEPPED TUBULAR
46102098	WILTSHIRE AVENUE	Burton upon Stather Parish	487354.89	417527.21	16	7015	00201401	01/04/2008 00:00	2	3	LESS THAN 30MPH	BACK OF FOOTPATH	0	POST TOP	NOT APPLICABLE	RIGID COLUMN	URBIS	AXIA 2 S1	BRITISH STEE	TUBULAR STEEL	6	GALVANISED	ASH
46102098	WILTSHIRE AVENUE	Burton upon Stather Parish	487378.76	417505.24	17	7016	00201402	01/04/1980 00:00	2	3	LESS THAN 30MPH	VERGE	0	POST TOP	NOT APPLICABLE	RIGID COLUMN	URBIS	AXIA 2 S1	PETITJEAN	SHEET STEEL	5	GALVANISED	NIDD
46102098	WILTSHIRE AVENUE	Burton upon Stather Parish	487357.79	417493.95	18	7017	00201403	19/08/2019 00:00	2	3	LESS THAN 30MPH	BACK OF FOOTPATH	0	POST TOP	NOT APPLICABLE	RIGID COLUMN	URBIS	AXIA 2 S1	MALLATITE	TUBULAR STEEL	6	GALVANISED	TUBULAR
46102098	WILTSHIRE AVENUE	Burton upon Stather Parish	487371.17	417466.84	19	7018	00201404	01/04/1980 00:00	2	3	LESS THAN 30MPH	BACK OF FOOTPATH	0	POST TOP	NOT APPLICABLE	RIGID COLUMN	URBIS	AXIA 2 S1	PETITJEAN	SHEET STEEL	5	GALVANISED	NIDD
46102098	WILTSHIRE AVENUE	Burton upon Stather Parish	487496.05	417931.65	2	7001	00201387	01/04/2010 00:00	2	3	LESS THAN 30MPH	BACK OF FOOTPATH	0	POST TOP	NOT APPLICABLE	RIGID COLUMN	URBIS	AXIA 2 S1	MALLATITE	TUBULAR STEEL	6	GALVANISED	TUBULAR
46102098	WILTSHIRE AVENUE	Burton upon Stather Parish	487396.17	417484.04	20	7019	00201405	01/04/2002 00:00	2	3	LESS THAN 30MPH	VERGE	0	POST TOP	NOT APPLICABLE	RIGID COLUMN	URBIS	AXIA 2 S1	PETITJEAN	SHEET STEEL	5	GALVANISED	NIDD
46102098	WILTSHIRE AVENUE	Burton upon Stather Parish	487410.69	417458.24	21	7020	00201406	01/04/2008 00:00	2	3	LESS THAN 30MPH	FRONT OF FOOTPATH	0	POST TOP	NOT APPLICABLE	RIGID COLUMN	URBIS	AXIA 2 S1	BRITISH STEE	TUBULAR STEEL	6	GALVANISED	ASH
46102098	WILTSHIRE AVENUE	Burton upon Stather Parish	487440.48	417425.74	22	7021	00201407	01/04/2008 00:00	2	3	LESS THAN 30MPH	VERGE	0	POST TOP	NOT APPLICABLE	RIGID COLUMN	URBIS	AXIA 2 S1	BRITISH STEE	TUBULAR STEEL	6	GALVANISED	ASH
46102098	WILTSHIRE AVENUE	Burton upon Stather Parish	487451.87	417392.08	23	7022	00201408	01/04/1980 00:00	2	3	LESS THAN 30MPH	VERGE	0	POST TOP	NOT APPLICABLE	RIGID COLUMN	URBIS	AXIA 2 S1	PETITJEAN	SHEET STEEL	5	GALVANISED	NIDD
46102098	WILTSHIRE AVENUE	Burton upon Stather Parish	487470.11	417348.63	24	7023	00201409	01/04/2008 00:00	2	3	LESS THAN 30MPH	VERGE	0	POST TOP	NOT APPLICABLE	RIGID COLUMN	URBIS	AXIA 2 S1	BRITISH STEE	TUBULAR STEEL	6	GALVANISED	ASH
46102098	WILTSHIRE AVENUE	Burton upon Stather Parish	487466.59	417309.94	25	7024	00201410	01/04/1999 00:00	2	3	LESS THAN 30MPH	VERGE	0	POST TOP	NOT APPLICABLE	RIGID COLUMN	URBIS	AXIA 2 S1	PETITJEAN	SHEET STEEL	5	GALVANISED	NIDD
46102098	WILTSHIRE AVENUE	Burton upon Stather Parish	487506.73	417902.59	3	7002	00201388	01/04/1980 00:00	2	3	LESS THAN 30MPH	BACK OF FOOTPATH	0	POST TOP	NOT APPLICABLE	RIGID COLUMN	URBIS	AXIA 2 S1	MALLATITE	TUBULAR STEEL	5	GALVANISED	STEPPED TUBULAR
46102098	WILTSHIRE AVENUE	Burton upon Stather Parish	487475.61	417864.28	4	7003	00201389	01/04/2010 00:00	2	3	LESS THAN 30MPH	BACK OF FOOTPATH	0	POST TOP	NOT APPLICABLE	RIGID COLUMN	URBIS	AXIA 2 S1	MALLATITE	TUBULAR STEEL	6	GALVANISED	TUBULAR
46102098	WILTSHIRE AVENUE	Burton upon Stather Parish	487442.79	417843.6	5	7004	00201390	01/04/2001 00:00	2	3	LESS THAN 30MPH	BACK OF FOOTPATH	0	POST TOP	NOT APPLICABLE	RIGID COLUMN	URBIS	AXIA 2 S1	MALLATITE	TUBULAR STEEL	5	GALVANISED	STEPPED TUBULAR
46102098	WILTSHIRE AVENUE	Burton upon Stather Parish	487401.33	417842.34	6	7005	00201391	01/04/1980 00:00	2	3	LESS THAN 30MPH	VERGE	0	POST TOP	NOT APPLICABLE	RIGID COLUMN	URBIS	AXIA 2 S1	PETITJEAN	SHEET STEEL	5	GALVANISED	NIDD
46102098	WILTSHIRE AVENUE	Burton upon Stather Parish	487368.67	417827.96	7	7006	00201392	01/04/1980 00:00	2	3	LESS THAN 30MPH	BACK OF FOOTPATH	0	POST TOP	NOT APPLICABLE	RIGID COLUMN	URBIS	AXIA 2 S1	PETITJEAN	SHEET STEEL	5	GALVANISED	NIDD
46102098	WILTSHIRE AVENUE	Burton upon Stather Parish	487352.02	417803.35	8	7007	00201393	01/04/1980 00:00	2	3	LESS THAN 30MPH	VERGE	0	POST TOP	NOT APPLICABLE	RIGID COLUMN	URBIS	AXIA 2 S1	PETITJEAN	SHEET STEEL	5	GALVANISED	NIDD
46102098	WILTSHIRE AVENUE	Burton upon Stather Parish	487347.77	417766.36	9	7008	00201394	01/04/2008 00:00	2	3	LESS THAN 30MPH	BACK OF FOOTPATH	0	POST TOP	NOT APPLICABLE	RIGID COLUMN	URBIS	AXIA 2 S1	BRITISH STEE	TUBULAR STEEL	6	GALVANISED	ASH
46102099	WILLOUGHBY ROAD	Bottesford Parish	488794.49	407746.72	1	7000	00201411	10/10/2019 00:00	3	1	LESS THAN 30MPH	VERGE	0	POST TOP	NOT APPLICABLE	RIGID COLUMN	URBIS	AXIA 2 S1	MALLATITE	TUBULAR STEEL	6	GALVANISED	TUBULAR
46102099	WILLOUGHBY ROAD	Bottesford Parish	489001.96	407787.23	10	7009	00201420	01/04/1994 00:00	3	1	LESS THAN 30MPH	VERGE	800	SINGLE ARM	NOT APPLICABLE	RIGID COLUMN	URBIS	AXIA 2 S1	PETITJEAN	SHEET STEEL	6	GALVANISED	DAER
46102099	WILLOUGHBY ROAD	Bottesford Parish	489027.94	407778.72	11	7010	00201421	01/04/1994 00:00	3	1	LESS THAN 30MPH	VERGE	800	SINGLE ARM	NOT APPLICABLE	RIGID COLUMN	URBIS	AXIA 2 S1	PETITJEAN	SHEET STEEL	6	GALVANISED	DAER
46102099	WILLOUGHBY ROAD	Bottesford Parish	489052.13	407789.47	12	7011	00201422	01/04/1994 00:00	3	1	LESS THAN 30MPH	VERGE	800	SINGLE ARM	NOT APPLICABLE	RIGID COLUMN	URBIS	AXIA 2 S1	PETITJEAN	SHEET STEEL	6	GALVANISED	DAER
46102099	WILLOUGHBY ROAD	Bottesford Parish	489071.25	407780.84	13	7012	00201423	01/04/1994 00:00	3	1	LESS THAN 30MPH	VERGE	800	SINGLE ARM	NOT APPLICABLE	RIGID COLUMN	URBIS	AXIA 2 S1	PETITJEAN	SHEET STEEL	6	GALVANISED	DAER
46102099	WILLOUGHBY ROAD	Bottesford Parish

46102111	ANCHOLME WAY	Brigg Parish	499712.63	407269.68	13	7012	00201591	01/06/2022 00:00	2	3	LESS THAN 30MPH	VERGE	1000	SINGLE ARM	NOT APPLICABLE	RIGID COLUMN	URBIS	AXIA 2 S1	MALLATITE	TUBULAR STEEL	8	GALVANISED	TUBULAR
46102111	ANCHOLME WAY	Brigg Parish	499727.68	407265.92	14	7013	00201592	01/04/1993 00:00	2	3	LESS THAN 30MPH	BACK OF FOOTPATH	0	POST TOP	MID GREY	RIGID COLUMN	URBIS	AXIA 2 S1	PETITJEAN	TUBULAR STEEL	8	PAINTED	CONICAL
46102111	ANCHOLME WAY	Brigg Parish	499721.32	407248.78	15	7014	00201593	01/04/1993 00:00	2	3	LESS THAN 30MPH	BACK OF FOOTPATH	0	POST TOP	MID GREY	RIGID COLUMN	URBIS	AXIA 2 S1	PETITJEAN	TUBULAR STEEL	8	PAINTED	CONICAL
46102111	ANCHOLME WAY	Brigg Parish	499734.76	407252	16	7015	00201594	01/04/1993 00:00	2	3	LESS THAN 30MPH	BACK OF FOOTPATH	0	POST TOP	MID GREY	RIGID COLUMN	URBIS	AXIA 2 S1	PETITJEAN	TUBULAR STEEL	8	PAINTED	CONICAL
46102111	ANCHOLME WAY	Brigg Parish	499734.36	407225.73	17	7016	00201595	01/04/1993 00:00	2	3	LESS THAN 30MPH	BACK OF FOOTPATH	0	POST TOP	MID GREY	RIGID COLUMN	URBIS	AXIA 2 S1	PETITJEAN	TUBULAR STEEL	8	PAINTED	CONICAL
46102111	ANCHOLME WAY	Brigg Parish	499749.95	407223.04	18	7017	00201596	01/04/1993 00:00	2	3	LESS THAN 30MPH	BACK OF FOOTPATH	0	POST TOP	MID GREY	RIGID COLUMN	URBIS	AXIA 2 S1	PETITJEAN	TUBULAR STEEL	8	PAINTED	CONICAL
46102111	ANCHOLME WAY	Brigg Parish	499741.84	407200.95	19	7018	00201597	01/04/1993 00:00	2	3	LESS THAN 30MPH	BACK OF FOOTPATH	0	POST TOP	MID GREY	RIGID COLUMN	URBIS	AXIA 2 S1	PETITJEAN	TUBULAR STEEL	8	PAINTED	CONICAL
46102111	ANCHOLME WAY	Brigg Parish	499729.42	407406.07	2	7001	00201580	01/04/1993 00:00	2	3	LESS THAN 30MPH	BACK OF FOOTPATH	1250	SINGLE ARM	MID GREY	RIGID COLUMN	URBIS	AXIA 2 S1	PETITJEAN	SHEET STEEL	10	PAINTED	THAMES
46102111	ANCHOLME WAY	Brigg Parish	499755.28	407200.41	20	7019	00201598	01/04/1993 00:00	2	3	LESS THAN 30MPH	BACK OF FOOTPATH	0	POST TOP	MID GREY	RIGID COLUMN	URBIS	AXIA 2 S1	PETITJEAN	TUBULAR STEEL	8	PAINTED	CONICAL
46102111	ANCHOLME WAY	Brigg Parish	499756.89	407170.84	21	7020	00201599	01/04/1993 00:00	2	3	LESS THAN 30MPH	BACK OF FOOTPATH	1250	SINGLE ARM	NOT APPLICABLE	RIGID COLUMN	URBIS	AXIA 2 S1	PETITJEAN	SHEET STEEL	10	GALVANISED	THAMES
46102111	ANCHOLME WAY	Brigg Parish	499739.15	407160.62	22	7021	00201600	01/04/1993 00:00	2	3	LESS THAN 30MPH	BACK OF FOOTPATH	1250	SINGLE ARM	NOT APPLICABLE	RIGID COLUMN	URBIS	AXIA 2 S1	PETITJEAN	SHEET STEEL	10	GALVANISED	THAMES
46102111	ANCHOLME WAY	Brigg Parish	499705	407382.48	3	7002	00201581	01/04/1993 00:00	2	3	LESS THAN 30MPH	BACK OF FOOTPATH	0	POST TOP	MID GREY	RIGID COLUMN	URBIS	AXIA 2 S1	PETITJEAN	TUBULAR STEEL	8	PAINTED	CONICAL
46102111	ANCHOLME WAY	Brigg Parish	499718.44	407375.49	4	7003	00201582	01/04/1993 00:00	2	3	LESS THAN 30MPH	BACK OF FOOTPATH	0	POST TOP	MID GREY	RIGID COLUMN	URBIS	AXIA 2 S1	PETITJEAN	TUBULAR STEEL	8	PAINTED	CONICAL
46102111	ANCHOLME WAY	Brigg Parish	499702.59	407368.29	5	7004	00201583	01/04/1993 00:00	2	3	LESS THAN 30MPH	BACK OF FOOTPATH	0	POST TOP	MID GREY	RIGID COLUMN	URBIS	AXIA 2 S1	PETITJEAN	TUBULAR STEEL	8	PAINTED	CONICAL
46102111	ANCHOLME WAY	Brigg Parish	499716.03	407358.61	6	7005	00201584	01/04/1993 00:00	2	3	LESS THAN 30MPH	BACK OF FOOTPATH	0	POST TOP	MID GREY	RIGID COLUMN	URBIS	AXIA 2 S1	PETITJEAN	TUBULAR STEEL	8	PAINTED	CONICAL
46102111	ANCHOLME WAY	Brigg Parish	499699.36	407348.39	7	7006	00201585	01/04/1993 00:00	2	3	LESS THAN 30MPH	BACK OF FOOTPATH	0	POST TOP	MID GREY	RIGID COLUMN	URBIS	AXIA 2 S1	PETITJEAN	TUBULAR STEEL	8	PAINTED	CONICAL
46102111	ANCHOLME WAY	Brigg Parish	499713.88	407335.49	8	7007	00201586	01/04/1993 00:00	2	3	LESS THAN 30MPH	BACK OF FOOTPATH	0	POST TOP	MID GREY	RIGID COLUMN	URBIS	AXIA 2 S1	PETITJEAN	TUBULAR STEEL	8	PAINTED	CONICAL
46102111	ANCHOLME WAY	Brigg Parish	499699.45	407318.14	9	7008	00201587	01/04/1993 00:00	2	3	LESS THAN 30MPH	BACK OF FOOTPATH	0	POST TOP	MID GREY	RIGID COLUMN	URBIS	AXIA 2 S1	PETITJEAN	TUBULAR STEEL	8	PAINTED	CONICAL
46102112	BARTON ROAD	Wrawby Parish	501363.02	408285.25	1	7023	00201624	01/04/1993 00:00	6	4	GREATER THAN 50MPH	SPLITTER ISLAND	300	SINGLE ARM	NOT APPLICABLE	RIGID COLUMN	URBIS	AXIA 2 S1	PETITJEAN	SHEET STEEL	6	GALVANISED	DAER
46102112	BARTON ROAD	Wrawby Parish	501526.94	408966.25	1	7000	00201601	01/04/1994 00:00	6	4	BETWEEN 30-50 MPH	BACK OF FOOTPATH	800	SINGLE ARM	NOT APPLICABLE	RIGID COLUMN	URBIS	AXIA 2 S1	PETITJEAN	SHEET STEEL	6	GALVANISED	DAER
46102112	BARTON ROAD	Wrawby Parish	501612.18	409235.24	10	7009	00201610	01/04/1989 00:00	6	4	BETWEEN 30-50 MPH	BACK OF FOOTPATH	800	SINGLE ARM	NOT APPLICABLE	RIGID COLUMN	URBIS	AXIA 2 S1	PETITJEAN	SHEET STEEL	6	GALVANISED	DAER
46102112	BARTON ROAD	Wrawby Parish	501623.95	409271	11	7010	00201611	01/04/1989 00:00	6	4	BETWEEN 30-50 MPH	BACK OF FOOTPATH	800	SINGLE ARM	NOT APPLICABLE	RIGID COLUMN	URBIS	AXIA 2 S1	PETITJEAN	SHEET STEEL	6	GALVANISED	DAER
46102112	BARTON ROAD	Wrawby Parish	501633.31	409299.42	12	7011	00201612	01/04/1989 00:00	6	4	BETWEEN 30-50 MPH	BACK OF FOOTPATH	800	SINGLE ARM	NOT APPLICABLE	RIGID COLUMN	URBIS	AXIA 2 S1	PETITJEAN	SHEET STEEL	6	GALVANISED	DAER
46102112	BARTON ROAD	Wrawby Parish	501643	409330.51	13	7012	00201613	01/04/1989 00:00	6	4	BETWEEN 30-50 MPH	BACK OF FOOTPATH	800	SINGLE ARM	NOT APPLICABLE	RIGID COLUMN	URBIS	AXIA 2 S1	PETITJEAN	SHEET STEEL	6	GALVANISED	DAER
46102112	BARTON ROAD	Wrawby Parish	501652.36	409360.26	14	7013	00201614	01/04/1989 00:00	6	4	BETWEEN 30-50 MPH	BACK OF FOOTPATH	800	SINGLE ARM	NOT APPLICABLE	RIGID COLUMN	URBIS	AXIA 2 S1	PETITJEAN	SHEET STEEL	6	GALVANISED	DAER
46102112	BARTON ROAD	Wrawby Parish	501662.69	409392.32	15	7014	00201615	01/04/1989 00:00	6	4	BETWEEN 30-50 MPH	BACK OF FOOTPATH	800	SINGLE ARM	NOT APPLICABLE	RIGID COLUMN	URBIS	AXIA 2 S1	PETITJEAN	SHEET STEEL	6	GALVANISED	DAER
46102112	BARTON ROAD	Wrawby Parish	501681.24	409413.37	16	7015	00201616	01/04/1989 00:00	6	4	BETWEEN 30-50 MPH	BACK OF FOOTPATH	800	SINGLE ARM	NOT APPLICABLE	RIGID COLUMN	URBIS	AXIA 2 S1	PETITJEAN	SHEET STEEL	6	GALVANISED	DAER
46102112	BARTON ROAD	Wrawby Parish	501678.52	409440.62	17	7016	00201617	01/04/1989 00:00	6	4	BETWEEN 30-50 MPH	BACK OF FOOTPATH	800	SINGLE ARM	NOT APPLICABLE	RIGID COLUMN	URBIS	AXIA 2 S1	PETITJEAN	SHEET STEEL	6	GALVANISED	DAER
46102112	BARTON ROAD	Wrawby Parish	501686.88	409472.05	18	7017	00201618	01/04/1989 00:00	6	4	BETWEEN 30-50 MPH	BACK OF FOOTPATH	800	SINGLE ARM	NOT APPLICABLE	RIGID COLUMN	URBIS	AXIA 2 S1	PETITJEAN	SHEET STEEL	6	GALVANISED	DAER
46102112	BARTON ROAD	Wrawby Parish	501695.57	409497.79	19	7018	00201619	01/04/1989 00:00	6	4	BETWEEN 30-50 MPH	BACK OF FOOTPATH	800	SINGLE ARM	NOT APPLICABLE	RIGID COLUMN	URBIS	AXIA 2 S1	PETITJEAN	SHEET STEEL	6	GALVANISED	DAER
46102112	BARTON ROAD	Wrawby Parish	501535.77	408996.76	2	7001	00201602	01/04/1994 00:00	6	4	BETWEEN 30-50 MPH	BACK OF FOOTPATH	800	SINGLE ARM	NOT APPLICABLE	RIGID COLUMN	URBIS	AXIA 2 S1	PETITJEAN	SHEET STEEL	6	GALVANISED	DAER
46102112	BARTON ROAD	Wrawby Parish	501362.6	408313.85	2	7024	00201625	01/04/1994 00:00	6	4	GREATER THAN 50MPH	BACK OF FOOTPATH	1250	SINGLE ARM	NOT APPLICABLE	RIGID COLUMN	URBIS	AXIA 2 S1	PETITJEAN	SHEET STEEL	8	GALVANISED	THAMES
46102112	BARTON ROAD	Wrawby Parish	501704.93	409530.22	20	7019	00201620	01/04/1989 00:00	6	4	BETWEEN 30-50 MPH	BACK OF FOOTPATH	800	SINGLE ARM	NOT APPLICABLE	RIGID COLUMN	URBIS	AXIA 2 S1	PETITJEAN	SHEET STEEL	6	GALVANISED	DAER
46102112	BARTON ROAD	Wrawby Parish	501714.29	409562.65	21	7020	00201621	01/04/1989 00:00	6	4	BETWEEN 30-50 MPH	BACK OF FOOTPATH	800	SINGLE ARM	NOT APPLICABLE	RIGID COLUMN	URBIS	AXIA 2 S1	PETITJEAN	SHEET STEEL	6	GALVANISED	DAER
46102112	BARTON ROAD	Wrawby Parish	501720.15	409586.28	22	7021	00201622	01/04/1989 00:00	6	4	BETWEEN 30-50 MPH	BACK OF FOOTPATH	800	SINGLE ARM	NOT APPLICABLE	RIGID COLUMN	URBIS	AXIA 2 S1	PETITJEAN	SHEET STEEL	6	GALVANISED	DAER
46102112	BARTON ROAD	Wrawby Parish	501728.08	409620.4	23	7022	00201623	01/04/1989 00:00	6	4	BETWEEN 30-50 MPH	BACK OF FOOTPATH	800	SINGLE ARM	NOT APPLICABLE	RIGID COLUMN	URBIS	AXIA 2 S1	PETITJEAN	SHEET STEEL	6	GALVANISED	DAER
46102112	BARTON ROAD	Wrawby Parish	501378.73	408307.02	3	7025	00201626	01/04/1994 00:00	6	4	GREATER THAN 50MPH	SPLITTER ISLAND	1250	SINGLE ARM	NOT APPLICABLE	RIGID COLUMN	URBIS	AXIA 2 S1	PETITJEAN	SHEET STEEL	8	GALVANISED	THAMES
46102112	BARTON ROAD	Wrawby Parish	501545.95	409024.08	3	7002	00201603	01/04/1994 00:00	6	4	BETWEEN 30-50 MPH	BACK OF FOOTPATH	800	SINGLE ARM	NOT APPLICABLE	RIGID COLUMN	URBIS	AXIA 2 S1	PETITJEAN	SHEET STEEL	6	GALVANISED	DAER
46102112	BARTON ROAD	Wrawby Parish	501397.5	408321.56	4	7026	00201627	01/04/1994 00:00	6	4	GREATER THAN 50MPH	FRONT OF FOOTPATH	1250	SINGLE ARM	NOT APPLICABLE	RIGID COLUMN	URBIS	AXIA 2 S1	PETITJEAN	SHEET STEEL	8	GALVANISED	THAMES
46102112	BARTON ROAD	Wrawby Parish	501552.23	409047.53	4	7003	00201604	14/11/2018 00:00	6	4	BETWEEN 30-50 MPH	BACK OF FOOTPATH	0	POST TOP	NOT APPLICABLE	RIGID COLUMN	URBIS	AXIA 2 S1	MALLATITE	TUBULAR STEEL	6	GALVANISED	TUBULAR
46102112	BARTON ROAD	Wrawby Parish	501562.26	409077.62	5	7004	00201605	01/04/1994 00:00	6	4	BETWEEN 30-50 MPH	BACK OF FOOTPATH	800	SINGLE ARM	NOT APPLICABLE	RIGID COLUMN	URBIS	AXIA 2 S1	PETITJEAN	SHEET STEEL	6	GALVANISED	DAER
46102112	BARTON ROAD	Wrawby Parish	501372.08	408345	5	7027	00201628	01/04/1994 00:00	6	4	GREATER THAN 50MPH	BACK OF FOOTPATH	1250	SINGLE ARM	NOT APPLICABLE	RIGID COLUMN	URBIS	AXIA 2 S1	PETITJEAN	SHEET STEEL	8	GALVANISED	THAMES
46102112	BARTON ROAD	Wrawby Parish	501378.12	408376.43	6	7028	00201629	01/04/1989 00:00	6	4	GREATER THAN 50MPH	BACK OF FOOTPATH	1250	SINGLE ARM	NOT APPLICABLE	RIGID COLUMN	URBIS	AXIA 2 S1	PETITJEAN	SHEET STEEL	8	GALVANISED	THAMES
46102112	BARTON ROAD	Wrawby Parish	501574.63	409115.73	6	7005	00201606	01/04/1989 00:00	6	4	BETWEEN 30-50 MPH	BACK OF FOOTPATH	800	SINGLE ARM	NOT APPLICABLE	RIGID COLUMN	URBIS	AXIA 2 S1	PETITJEAN	SHEET STEEL	6	GALVANISED	DAER
46102112	BARTON ROAD	Wrawby Parish	501585.05	409149.8	7	7006	00201607	01/04/1989 00:00	6	4	BETWEEN 30-50 MPH	BACK OF FOOTPATH	800	SINGLE ARM	NOT APPLICABLE	RIGID COLUMN	URBIS	AXIA 2 S1	PETITJEAN	SHEET STEEL	6	GALVANISED	DAER
46102112	BARTON ROAD	Wrawby Parish	501592.77	409171.96	8	7007	00201608	01/04/1989 00:00	6	4	BETWEEN 30-50 MPH	BACK OF FOOTPATH	800	SINGLE ARM	NOT APPLICABLE	RIGID COLUMN	URBIS	AXIA 2 S1	PETITJEAN	SHEET STEEL	6	GALVANISED	DAER
46102112	BARTON ROAD	Wrawby Parish	501603.82	409206.99	9	7008	00201609	01/04/1989 00:00	6	4	BETWEEN 30-50 MPH	BACK OF FOOTPATH	800	SINGLE ARM	NOT APPLICABLE	RIGID COLUMN	URBIS	AXIA 2 S1	PETITJEAN	SHEET STEEL	6	GALVANISED	DAER
46102113	BURRINGHAM ROAD	Scunthorpe	489220.49	408627.15	1	7000	00201630	01/04/1990 00:00	3	4	LESS THAN 30MPH	BACK OF FOOTPATH	1250	SINGLE ARM	NOT APPLICABLE	RIGID COLUMN	URBIS	AXIA 2 S1	PETITJEAN	SHEET STEEL	10	GALVANISED	THAMES
46102113	BURRINGHAM ROAD	Scunthorpe	488927.68	408636.39	10	7013	00201643	22/01/2021 00:00	3	4	LESS THAN 30MPH	BACK OF FOOTPATH	500	SINGLE ARM	NOT APPLICABLE	RIGID COLUMN	URBIS	AXIA 2 S1	MALLATITE	TUBULAR STEEL	8	GALVANISED	TUBULAR
46102113	BURRINGHAM ROAD	Scunthorpe	488889.15	408623.99	11	7014	00201644	22/01/2021 00:00	3	4	LESS THAN 30MPH	BACK OF FOOTPATH	500	SINGLE ARM	NOT APPLICABLE	RIGID COLUMN	URBIS	AXIA 2 S1	MALLATITE	TUBULAR STEEL	8	GALVANISED	TUBULAR
46102113	BURRINGHAM ROAD	Scunthorpe	488849.7	408634.77	12	7015	00201645	22/01/2021 00:00	3	4	LESS THAN 30MPH	BACK OF FOOTPATH	500	SINGLE ARM	NOT APPLICABLE	RIGID COLUMN	URBIS	AXIA 2 S1	MALLATITE	TUBULAR STEEL	8	GALVANISED	TUBULAR
46102113	BURRINGHAM ROAD	Scunthorpe	488815.76	408623.8	13	7016	00201646	01/04/1980 00:00	3	4	LESS THAN 30MPH	FRONT OF FOOTPATH	1250	SINGLE ARM	NOT APPLICABLE	RIGID COLUMN	URBIS	AXIA 2 S1	PETITJEAN	SHEET STEEL	8	GALVANISED	THAMES
46102113	BURRINGHAM ROAD	Scunthorpe	488786.68	408633.2	14	7017	00201647	22/01/2021 00:00	3	4	LESS THAN 30MPH	BACK OF FOOTPATH	500	SINGLE ARM	NOT APPLICABLE	RIGID COLUMN	URBIS	AXIA 2 S1	MALLATITE	TUBULAR STEEL	8	GALVANISED	TUBULAR
46102113	BURRINGHAM ROAD	Scunthorpe	488757.44	408621.19	15	7018	00201648	22/01/2021 00:00	3	4	LESS THAN 30MPH	BACK OF FOOTPATH	500	SINGLE ARM	NOT APPLICABLE	RIGID COLUMN	URBIS	AXIA 2 S1	MALLATITE	TUBULAR STEEL	8	GALVANISED	TUBULAR
46102113	BURRINGHAM ROAD	Scunthorpe	488721.41	408630.07	16	7019	00201649	01/04/1988 00:00	3	4	LESS THAN 30MPH	FRONT OF FOOTPATH	500	SINGLE ARM	NOT APPLICABLE	RIGID COLUMN	URBIS	AXIA 2 S1	PETITJEAN	SHEET STEEL	8	GALVANISED	THAMES
46102113	BURRINGHAM ROAD	Scunthorpe	488696.27	408614.3	17	7020	00201650	22/01/2021 00:00	3	4	LESS THAN 30MPH	BACK OF FOOTPATH	500	SINGLE ARM	NOT APPLICABLE	RIGID COLUMN	URBIS	AXIA 2 S1	MALLATITE	TUBULAR STEEL	8	GALVANISED	TUBULAR
46102113	BURRINGHAM ROAD	Scunthorpe	488655.48	408618.01	18	7021	00201651	22/01/2021 00:00	3	4	LESS THAN 30MPH	BACK OF FOOTPATH	500	SINGLE ARM	NOT APPLICABLE	RIGID COLUMN	URBIS	AXIA 2 S1	MALLATITE	TUBULAR STEEL	8	GALVANISED	TUBULAR
46102113	BURRINGHAM ROAD	Scunthorpe	488615.67	408602.8	19	7022	00201652	01/04/1980 00:00	3	4	LESS THAN 30MPH	BACK OF FOOTPATH	1250	SINGLE ARM	NOT APPLICABLE	RIGID COLUMN	URBIS	AXIA 2 S1	PETITJEAN	SHEET STEEL	8	GALVANISED	THAMES
46102113	BURRINGHAM ROAD	Scunthorpe	487344.42	408393.74	1X	7001	00201631	01/04/2000 00:00	3	4	BETWEEN 30-50 MPH	VERGE	800	SINGLE ARM	NOT APPLICABLE	RIGID COLUMN	URBIS	AXIA 2 S1	PETITJEAN	SHEET STEEL	12	GALVANISED	THAMES
46102113	BURRINGHAM ROAD	Scunthorpe	489214.13	408645.65	2	7002	00201632	01/04/1990 00:00	3	4	LESS THAN 30MPH	BACK OF FOOTPATH	1250	SINGLE ARM	MID GREY	RIGID COLUMN	URBIS	AXIA 2 S1	PETITJEAN	SHEET STEEL	10	PAINTED	THAMES
46102113	BURRINGHAM ROAD	Scunthorpe	488580.27	408610.06	20	7023	00201653	22/01/2021 00:00	3	4	LESS THAN 30MPH	BACK OF FOOTPATH	500	SINGLE ARM	NOT APPLICABLE	RIGID COLUMN	URBIS	AXIA 2 S1	MALLATITE	TUBULAR STEEL	8	GALVANISED	TUBULAR
46102113	BURRINGHAM ROAD	Scunthorpe	488547.9	408594.4	21	7024	00201654	01/04/2013 00:00	3	4	LESS THAN 30MPH	BACK OF FOOTPATH	1000	SINGLE ARM	NOT APPLICABLE	RIGID COLUMN	URBIS	AXIA 2 S1	VALMONT ST	SHEET STEEL	8	GALVANISED	THAMES
46102113	BURRINGHAM ROAD	Scunthorpe	488521.36	408589.22	22	7025	00201655	01/04/1985 00:00	3	4	LESS THAN 30MPH	BACK OF FOOTPATH	1250	SINGLE ARM	NOT APPLICABLE	RIGID COLUMN	URBIS	AXIA 2 S1	PETITJEAN	SHEET STEEL	8	GALVANISED	THAMES
46102113	BURRINGHAM ROAD	Scunthorpe	488495.78	408598.1	23	7026	00201656	01/04/2010 00:00	3	4	LESS THAN 30MPH	BACK OF FOOTPATH	1000	SINGLE ARM	NOT APPLICABLE	RIGID COLUMN	URBIS	AXIA 2 S1	VALMONT ST	SHEET STEEL	8	GALVANISED	THAMES
46102113	BURRINGHAM ROAD	Scunthorpe	488478.84	408583.98	24FP	7027	00201657	01/04/1988 00:00	3	4	LESS THAN 30MPH	BACK OF FOOTPATH	1500	SINGLE ARM	NOT APPLICABLE	RIGID COLUMN	URBIS	AXIA 2 S1	PETITJEAN	SHEET STEEL	8	GALVANISED	THAMES
46102113	BURRINGHAM ROAD	Scunthorpe	488459.4	408580.28	25FP	7028	00201658	01/04/1988 00:00	3	4	LESS THAN 30MPH	BACK OF FOOTPATH	1500	SINGLE ARM	NOT APPLICABLE	RIGID COLUMN	URBIS	AXIA 2 S1	PETITJEAN	SHEET STEEL	8	GALVANISED	THAMES
46102113	BURRINGHAM ROAD	Scunthorpe	488434.9	408589.55	26FP	7029	00201659	01/04/1988 00:00	3	4	LESS THAN 30MPH	BACK OF FOOTPATH	1500	SINGLE ARM	NOT APPLICABLE	RIGID COLUMN	URBIS	AXIA 2 S1	PETITJEAN	SHEET STEEL	8	GALVANISED	THAMES
46102113	BURRINGHAM ROAD	Scunthorpe	488418.26	408573.55	27FP	7030	00201660	01/04/1988 00:00	3	4	LESS THAN 30MPH	BACK OF FOOTPATH	1500	SINGLE ARM	NOT APPLICABLE	RIGID COLUMN	URBIS	AXIA 2 S1	PETITJEAN	SHEET STEEL	8	GALVANISED	THAMES
46102113	BURRINGHAM ROAD	Scunthorpe	488392.37	408581.55	28FP	7031	00201661	01/04/1988 00:00	3	4	LESS THAN 30MPH	BACK OF FOOTPATH	1500	SINGLE ARM	NOT APPLICABLE	RIGID COLUMN	URBIS	AXIA 2 S1	PETITJEAN	SHEET STEEL	8	GALVANISED	THAMES
46102113	BURRINGHAM ROAD	Scunthorpe	488377.04	408564.43	29FP	7032	00201662	01/04/1988 00:00	3	4	LESS THAN 30MPH	BACK OF FOOTPATH	1500	SINGLE ARM	NOT APPLICABLE	RIGID COLUMN	URBIS	AXIA 2 S1	PETITJEAN	SHEET STEEL	8	GALVANISED	THAMES
46102113	BURRINGHAM ROAD	Scunthorpe	487389.86	408394.15	2X	7003	00201633	01/04/2000 00:00	3	4	BETWEEN 30-50 MPH	BACK OF FOOTPATH	800	SINGLE ARM	NOT APPLICABLE	RIGID COLUMN	URBIS	AXIA 2 S1	PETITJEAN	SHEET STEEL	12	GALVANISED	THAMES
46102113	BURRINGHAM ROAD	Scunthorpe	489180.81	408628.99	3	7004	00201634	01/04/1990 00:00	3	4	LESS THAN 30MPH	BACK OF FOOTPATH	1250	SINGLE ARM	NOT APPLICABLE	RIGID COLUMN	URBIS	AXIA 2 S1	PETITJEAN	SHEET STEEL	10	GALVANISED	THAMES
46102113	BURRINGHAM ROAD	Scunthorpe	488358.66	408559.88	30	7033	00201663	01/04/1988 00:00	3	4	LESS THAN 30MPH	BACK OF FOOTPATH	1500	SINGLE ARM	NOT APPLICABLE	RIGID COLUMN	URBIS	AXIA 2 S1	PETITJEAN	SHEET STEEL	8	GALVANISED	THAMES
46102113	BURRINGHAM ROAD	Scunthorpe	488332.02	408566	31	7034	00201664	01/04/1988 00:00	3	4	LESS THAN 30MPH	BACK OF FOOTPATH	1500	SINGLE ARM	NOT APPLICABLE	RIGID COLUMN	URBIS	AXIA 2 S1	PETITJEAN	SHEET STEEL	8	GALVANISED	THAMES
46102113	BURRINGHAM ROAD	Scunthorpe	488306.62	408559.07	32	7035	00201665	22/01/2021 00:00	3	4	LESS THAN 30MPH	BACK OF FOOTPATH	500	SINGLE ARM	NOT APPLICABLE	RIGID COLUMN	URBIS	AXIA 2 S1	MALLATITE	TUBULAR STEEL	8	GALVANISED	TUBULAR
46102113	BURRINGHAM ROAD	Scunthorpe	488264.46	408544.89	33	7036	00201666	22/01/2021 00:00	3	4	LESS THAN 30MPH	VERGE	500	SINGLE ARM	NOT APPLICABLE	RIGID COLUMN	URBIS	AXIA 2 S1	MALLATITE	TUBULAR STEEL	8	GALVANISED	TUBULAR
46102113	BURRINGHAM ROAD	Scunthorpe	488231.21	408532.74	34	7037	00201667	22/01/2021 00:00	3	4	LESS THAN 30MPH	VERGE	500	SINGLE ARM	NOT APPLICABLE	RIGID COLUMN	URBIS	AXIA 2 S1	MALLATITE	TUBULAR STEEL	8	GALVANISED	TUBULAR
46102113	BURRINGHAM ROAD	Scunthorpe	488199.38	408506.54	35	7038	00201668	22/01/2021 00:00	3	4	LESS THAN 30MPH	BACK OF FOOTPATH	500	SINGLE ARM	NOT APPLICABLE	RIGID COLUMN	URBIS	AXIA 2 S1	MALLATITE	TUBULAR STEEL	8	GALVANISED	TUBULAR
46102113	BURRINGHAM ROAD	Scunthorpe	488158.36	408502.15	36FP	7039	00201669	22/01/2021 00:00	3	4	LESS THAN 30MPH	VERGE	500	SINGLE ARM	NOT APPLICABLE	RIGID COLUMN	URBIS	AXIA 2 S1	MALLATITE	TUBULAR STEEL	8	GALVANISED	TUBULAR
46102113	BURRINGHAM ROAD	Scunthorpe	488128.19	408489.88	37FP	7040	00201670	22/01/2021 00:00	3	4	LESS THAN 30MPH	VERGE	500	SINGLE ARM	NOT APPLICABLE	RIGID COLUMN	URBIS	AXIA 2 S1	MALLATITE	TUBULAR STEEL	8	GALVANISED	TUBULAR
46102113	BURRINGHAM ROAD	Scunthorpe	488094.23	408466.59	38	7041	00201671	22/01/2021 00:00	3	4	LESS THAN 30MPH	BACK OF FOOTPATH	500	SINGLE ARM	NOT APPLICABLE	RIGID COLUMN	URBIS	AXIA 2 S1	MALLATITE	TUBULAR STEEL	8	GALVANISED	TUBULAR
46102113	BURRINGHAM ROAD	Scunthorpe	488057.51	408461.19	39	7042	00201672	22/01/2021 00:00	3	4	LESS THAN 30MPH	VERGE	500	SINGLE ARM	NOT APPLICABLE	RIGID COLUMN	URBIS	AXIA 2 S1	MALLATITE	TUBULAR STEEL	8	GALVANISED	TUBULAR
46102113	BURRINGHAM ROAD	Scunthorpe	487389	408350.06	3X	7005	00201635	01/04/2000 00:00	3	4	BETWEEN 30-50 MPH	BACK OF FOOTPATH	800	SINGLE ARM	NOT APPLICABLE	RIGID COLUMN	URBIS	AXIA 2 S1	PETITJEAN	SHEET STEEL	12	GALVANISED	THAMES
46102113	BURRINGHAM ROAD	Scunthorpe	489151.06	408627.54	4	7006	00201636	01/04/1990 00:00	3	4	LESS THAN 30MPH	BACK OF FOOTPATH	1250	SINGLE ARM	NOT APPLICABLE	RIGID COLUMN	URBIS	AXIA 2 S1	PETITJEAN	SHEET STEEL	10	GALVANISED	THAMES
46102113	BURRINGHAM ROAD	Scunthorpe	488023.64	408437.09	40FP	7043	00201673	22/01/2021 00:00	3	4	LESS THAN 30MPH	BACK OF FOOTPATH	500	SINGLE ARM	NOT APPLICABLE	RIGID COLUMN	URBIS	AXIA 2 S1	MALLATITE	TUBULAR STEEL	8	GALVANISED	TUBULAR
46102113	BURRINGHAM ROAD	Scunthorpe	487990.95	408441.01	41FP	7044	00201674	22/01/2021 00:00	3	4	LESS THAN 30MPH	BACK OF FOOTPATH	500	SINGLE ARM	NOT APPLICABLE	RIGID COLUMN	URBIS	AXIA 2 S1	MALLATITE	TUB

46102117	PHOENIX PARKWAY	Scunthorpe	488387.39	412982.58	42	7022	00201818	01/04/1990 00:00	4	4	GREATER THAN 50MPH	VERGE	300	SINGLE ARM	NOT APPLICABLE	RIGID COLUMN	URBIS	AXIA 2 S1	PETITJEAN	STAINLESS STEEL	5	NOT APPLICABI	SEVERN				
46102117	PHOENIX PARKWAY	Scunthorpe	488405.6	412978.21	43	7023	00201819	01/04/1990 00:00	4	4	GREATER THAN 50MPH	VERGE	300	SINGLE ARM	NOT APPLICABLE	RIGID COLUMN	URBIS	AXIA 2 S1	PETITJEAN	STAINLESS STEEL	5	NOT APPLICABI	SEVERN				
46102117	PHOENIX PARKWAY	Scunthorpe	488428.3	412971.67	44	7024	00201820	01/04/1990 00:00	4	4	GREATER THAN 50MPH	VERGE	300	SINGLE ARM	NOT APPLICABLE	RIGID COLUMN	URBIS	AXIA 2 S1	PETITJEAN	STAINLESS STEEL	5	NOT APPLICABI	SEVERN				
46102117	PHOENIX PARKWAY	Scunthorpe	488450.63	412965.92	45	7025	00201821	01/04/1990 00:00	4	4	GREATER THAN 50MPH	VERGE	300	SINGLE ARM	NOT APPLICABLE	RIGID COLUMN	URBIS	AXIA 2 S1	PETITJEAN	STAINLESS STEEL	5	NOT APPLICABI	SEVERN				
46102117	PHOENIX PARKWAY	Scunthorpe	488472.12	412959.73	46	7026	00201822	01/04/1990 00:00	4	4	GREATER THAN 50MPH	VERGE	300	SINGLE ARM	NOT APPLICABLE	RIGID COLUMN	URBIS	AXIA 2 S1	PETITJEAN	STAINLESS STEEL	5	NOT APPLICABI	SEVERN				
46102117	PHOENIX PARKWAY	Scunthorpe	488492.51	412953.9	47	7027	00201823	01/04/1990 00:00	4	4	GREATER THAN 50MPH	VERGE	300	SINGLE ARM	NOT APPLICABLE	RIGID COLUMN	URBIS	AXIA 2 S1	PETITJEAN	STAINLESS STEEL	5	NOT APPLICABI	SEVERN				
46102117	PHOENIX PARKWAY	Scunthorpe	488514	412947.71	48	7028	00201824	01/04/1990 00:00	4	4	GREATER THAN 50MPH	VERGE	300	SINGLE ARM	NOT APPLICABLE	RIGID COLUMN	URBIS	AXIA 2 S1	PETITJEAN	STAINLESS STEEL	5	NOT APPLICABI	SEVERN				
46102117	PHOENIX PARKWAY	Scunthorpe	488534.65	412942.2	49	7029	00201825	01/04/1990 00:00	4	4	GREATER THAN 50MPH	VERGE	300	SINGLE ARM	NOT APPLICABLE	RIGID COLUMN	URBIS	AXIA 2 S1	PETITJEAN	STAINLESS STEEL	5	NOT APPLICABI	SEVERN				
46102117	PHOENIX PARKWAY	Scunthorpe	488690.73	412907.48	4X	7085	00201881	01/04/1990 00:00	4	4	LESS THAN 30MPH	SPLITTER ISLAND	300	SINGLE ARM	NOT APPLICABLE	RIGID COLUMN	URBIS	AXIA 2 S1	PETITJEAN	STAINLESS STEEL	5	NOT APPLICABI	SEVERN				
46102117	PHOENIX PARKWAY	Scunthorpe	487597.74	412926.84	5	7067	00201863	01/04/1990 00:00	4	4	GREATER THAN 50MPH	VERGE	300	SINGLE ARM	NOT APPLICABLE	RIGID COLUMN	URBIS	AXIA 2 S1	PETITJEAN	STAINLESS STEEL	5	NOT APPLICABI	SEVERN				
46102117	PHOENIX PARKWAY	Scunthorpe	488555.7	412937.28	50	7030	00201826	01/04/1990 00:00	4	4	GREATER THAN 50MPH	VERGE	300	SINGLE ARM	NOT APPLICABLE	RIGID COLUMN	URBIS	AXIA 2 S1	PETITJEAN	STAINLESS STEEL	5	NOT APPLICABI	SEVERN				
46102117	PHOENIX PARKWAY	Scunthorpe	488577.91	412931.09	51	7031	00201827	01/04/1990 00:00	4	4	GREATER THAN 50MPH	VERGE	300	SINGLE ARM	NOT APPLICABLE	RIGID COLUMN	URBIS	AXIA 2 S1	PETITJEAN	STAINLESS STEEL	5	NOT APPLICABI	SEVERN				
46102117	PHOENIX PARKWAY	Scunthorpe	488598.55	412924.8	52	7032	00201828	01/04/1990 00:00	4	4	GREATER THAN 50MPH	VERGE	300	SINGLE ARM	NOT APPLICABLE	RIGID COLUMN	URBIS	AXIA 2 S1	PETITJEAN	STAINLESS STEEL	5	NOT APPLICABI	SEVERN				
46102117	PHOENIX PARKWAY	Scunthorpe	488616.93	412918.18	53	7033	00201829	19/04/2021 00:00	4	4	LESS THAN 30MPH	VERGE	300	SINGLE ARM	NOT APPLICABLE	RIGID COLUMN	URBIS	AXIA 2 S1	PETITJEAN	STAINLESS STEEL	5	NOT APPLICABI	SEVERN				
46102117	PHOENIX PARKWAY	Scunthorpe	488628.58	412932.75	54	7034	00201830	01/04/1990 00:00	4	4	LESS THAN 30MPH	BACK OF FOOTPATH	300	SINGLE ARM	NOT APPLICABLE	RIGID COLUMN	URBIS	AXIA 2 S1	PETITJEAN	STAINLESS STEEL	5	NOT APPLICABI	SEVERN				
46102117	PHOENIX PARKWAY	Scunthorpe	488631.49	412911.26	55	7035	00201831	01/04/1990 00:00	4	4	LESS THAN 30MPH	VERGE	300	SINGLE ARM	NOT APPLICABLE	RIGID COLUMN	URBIS	AXIA 2 S1	PETITJEAN	STAINLESS STEEL	5	NOT APPLICABI	SEVERN				
46102117	PHOENIX PARKWAY	Scunthorpe	488693.5	412898.42	56	7036	00201832	01/04/1990 00:00	4	4	LESS THAN 30MPH	VERGE	300	SINGLE ARM	NOT APPLICABLE	RIGID COLUMN	URBIS	AXIA 2 S1	PETITJEAN	STAINLESS STEEL	5	NOT APPLICABI	SEVERN				
46102117	PHOENIX PARKWAY	Scunthorpe	488705.15	412914.81	57	7037	00201833	01/04/1990 00:00	4	4	LESS THAN 30MPH	BACK OF FOOTPATH	300	SINGLE ARM	NOT APPLICABLE	RIGID COLUMN	URBIS	AXIA 2 S1	PETITJEAN	STAINLESS STEEL	5	NOT APPLICABI	SEVERN				
46102117	PHOENIX PARKWAY	Scunthorpe	488716.85	412895.94	58	7038	00201834	01/04/1990 00:00	4	4	GREATER THAN 50MPH	VERGE	300	SINGLE ARM	NOT APPLICABLE	RIGID COLUMN	URBIS	AXIA 2 S1	PETITJEAN	STAINLESS STEEL	5	NOT APPLICABI	SEVERN				
46102117	PHOENIX PARKWAY	Scunthorpe	488737.69	412892.46	59	7039	00201835	01/04/1990 00:00	4	4	GREATER THAN 50MPH	VERGE	300	SINGLE ARM	NOT APPLICABLE	RIGID COLUMN	URBIS	AXIA 2 S1	PETITJEAN	STAINLESS STEEL	5	NOT APPLICABI	SEVERN				
46102117	PHOENIX PARKWAY	Scunthorpe	488678.99	412890.53	5X	7086	00201882	01/04/1990 00:00	4	4	LESS THAN 30MPH	VERGE	300	SINGLE ARM	NOT APPLICABLE	RIGID COLUMN	URBIS	AXIA 2 S1	PETITJEAN	STAINLESS STEEL	5	NOT APPLICABI	SEVERN				
46102117	PHOENIX PARKWAY	Scunthorpe	487617.49	412932.67	6	7068	00201864	01/04/1990 00:00	4	4	GREATER THAN 50MPH	VERGE	300	SINGLE ARM	NOT APPLICABLE	RIGID COLUMN	URBIS	AXIA 2 S1	PETITJEAN	STAINLESS STEEL	5	NOT APPLICABI	SEVERN				
46102117	PHOENIX PARKWAY	Scunthorpe	488760.07	412888.27	60	7040	00201836	01/04/1990 00:00	4	4	GREATER THAN 50MPH	VERGE	300	SINGLE ARM	NOT APPLICABLE	RIGID COLUMN	URBIS	AXIA 2 S1	PETITJEAN	STAINLESS STEEL	5	NOT APPLICABI	SEVERN				
46102117	PHOENIX PARKWAY	Scunthorpe	488780.83	412884.27	61	7041	00201837	01/04/1990 00:00	4	4	GREATER THAN 50MPH	VERGE	300	SINGLE ARM	NOT APPLICABLE	RIGID COLUMN	URBIS	AXIA 2 S1	PETITJEAN	STAINLESS STEEL	5	NOT APPLICABI	SEVERN				
46102117	PHOENIX PARKWAY	Scunthorpe	488803.59	412879.86	62	7042	00201838	01/04/1990 00:00	4	4	GREATER THAN 50MPH	VERGE	300	SINGLE ARM	NOT APPLICABLE	RIGID COLUMN	URBIS	AXIA 2 S1	PETITJEAN	STAINLESS STEEL	5	NOT APPLICABI	SEVERN				
46102117	PHOENIX PARKWAY	Scunthorpe	488824.72	412875.85	63	7043	00201839	01/04/1990 00:00	4	4	GREATER THAN 50MPH	VERGE	300	SINGLE ARM	NOT APPLICABLE	RIGID COLUMN	URBIS	AXIA 2 S1	PETITJEAN	STAINLESS STEEL	5	NOT APPLICABI	SEVERN				
46102117	PHOENIX PARKWAY	Scunthorpe	488845.53	412871.12	64	7044	00201840	01/04/1990 00:00	4	4	GREATER THAN 50MPH	VERGE	300	SINGLE ARM	NOT APPLICABLE	RIGID COLUMN	URBIS	AXIA 2 S1	PETITJEAN	STAINLESS STEEL	5	NOT APPLICABI	SEVERN				
46102117	PHOENIX PARKWAY	Scunthorpe	488867.82	412866.47	65	7045	00201841	01/04/1990 00:00	4	4	GREATER THAN 50MPH	VERGE	300	SINGLE ARM	NOT APPLICABLE	RIGID COLUMN	URBIS	AXIA 2 S1	PETITJEAN	STAINLESS STEEL	5	NOT APPLICABI	SEVERN				
46102117	PHOENIX PARKWAY	Scunthorpe	488890.04	412861	66	7046	00201842	01/04/1990 00:00	4	4	GREATER THAN 50MPH	VERGE	300	SINGLE ARM	NOT APPLICABLE	RIGID COLUMN	URBIS	AXIA 2 S1	PETITJEAN	STAINLESS STEEL	5	NOT APPLICABI	SEVERN				
46102117	PHOENIX PARKWAY	Scunthorpe	488910.46	412856.55	67	7047	00201843	01/04/1990 00:00	4	4	GREATER THAN 50MPH	VERGE	300	SINGLE ARM	NOT APPLICABLE	RIGID COLUMN	URBIS	AXIA 2 S1	PETITJEAN	STAINLESS STEEL	5	NOT APPLICABI	SEVERN				
46102117	PHOENIX PARKWAY	Scunthorpe	488932.2	412851.76	68	7048	00201844	01/04/1990 00:00	4	4	GREATER THAN 50MPH	VERGE	300	SINGLE ARM	NOT APPLICABLE	RIGID COLUMN	URBIS	AXIA 2 S1	PETITJEAN	STAINLESS STEEL	5	NOT APPLICABI	SEVERN				
46102117	PHOENIX PARKWAY	Scunthorpe	488953.69	412845.21	69	7049	00201845	01/04/1990 00:00	4	4	GREATER THAN 50MPH	VERGE	300	SINGLE ARM	NOT APPLICABLE	RIGID COLUMN	URBIS	AXIA 2 S1	PETITJEAN	STAINLESS STEEL	5	NOT APPLICABI	SEVERN				
46102117	PHOENIX PARKWAY	Scunthorpe	488657.8	412887.92	6X	7087	00201883	01/04/1990 00:00	4	4	LESS THAN 30MPH	SPLITTER ISLAND	300	SINGLE ARM	NOT APPLICABLE	RIGID COLUMN	URBIS	AXIA 2 S1	PETITJEAN	STAINLESS STEEL	5	NOT APPLICABI	SEVERN				
46102117	PHOENIX PARKWAY	Scunthorpe	487638.57	412938	7	7069	00201865	01/04/1990 00:00	4	4	GREATER THAN 50MPH	VERGE	300	SINGLE ARM	NOT APPLICABLE	RIGID COLUMN	URBIS	AXIA 2 S1	PETITJEAN	STAINLESS STEEL	5	NOT APPLICABI	SEVERN				
46102117	PHOENIX PARKWAY	Scunthorpe	488975.63	412839.51	70	7050	00201846	01/04/1990 00:00	4	4	GREATER THAN 50MPH	VERGE	300	SINGLE ARM	NOT APPLICABLE	RIGID COLUMN	URBIS	AXIA 2 S1	PETITJEAN	STAINLESS STEEL	5	NOT APPLICABI	SEVERN				
46102117	PHOENIX PARKWAY	Scunthorpe	488997.06	412832.25	71	7051	00201847	01/04/1990 00:00	4	4	GREATER THAN 50MPH	VERGE	300	SINGLE ARM	NOT APPLICABLE	RIGID COLUMN	URBIS	AXIA 2 S1	PETITJEAN	STAINLESS STEEL	5	NOT APPLICABI	SEVERN				
46102117	PHOENIX PARKWAY	Scunthorpe	489015.33	412828.16	72	7052	00201848	01/04/1990 00:00	4	4	GREATER THAN 50MPH	VERGE	300	SINGLE ARM	NOT APPLICABLE	RIGID COLUMN	URBIS	AXIA 2 S1	PETITJEAN	STAINLESS STEEL	5	NOT APPLICABI	SEVERN				
46102117	PHOENIX PARKWAY	Scunthorpe	489038.65	412821.2	73	7053	00201849	01/04/1990 00:00	4	4	GREATER THAN 50MPH	VERGE	300	SINGLE ARM	NOT APPLICABLE	RIGID COLUMN	URBIS	AXIA 2 S1	PETITJEAN	STAINLESS STEEL	5	NOT APPLICABI	SEVERN				
46102117	PHOENIX PARKWAY	Scunthorpe	489059.78	412815.01	74	7054	00201850	01/04/1990 00:00	4	4	GREATER THAN 50MPH	VERGE	300	SINGLE ARM	NOT APPLICABLE	RIGID COLUMN	URBIS	AXIA 2 S1	PETITJEAN	STAINLESS STEEL	5	NOT APPLICABI	SEVERN				
46102117	PHOENIX PARKWAY	Scunthorpe	489081.11	412809.46	75	7055	00201851	01/04/1990 00:00	4	4	GREATER THAN 50MPH	VERGE	300	SINGLE ARM	NOT APPLICABLE	RIGID COLUMN	URBIS	AXIA 2 S1	PETITJEAN	STAINLESS STEEL	5	NOT APPLICABI	SEVERN				
46102117	PHOENIX PARKWAY	Scunthorpe	489101.87	412805.82	76	7056	00201852	01/04/1990 00:00	4	4	GREATER THAN 50MPH	VERGE	300	SINGLE ARM	NOT APPLICABLE	RIGID COLUMN	URBIS	AXIA 2 S1	PETITJEAN	STAINLESS STEEL	5	NOT APPLICABI	SEVERN				
46102117	PHOENIX PARKWAY	Scunthorpe	489123.46	412801.55	77	7057	00201853	01/04/1990 00:00	4	4	GREATER THAN 50MPH	VERGE	300	SINGLE ARM	NOT APPLICABLE	RIGID COLUMN	URBIS	AXIA 2 S1	PETITJEAN	STAINLESS STEEL	5	NOT APPLICABI	SEVERN				
46102117	PHOENIX PARKWAY	Scunthorpe	489143.85	412799	78	7058	00201854	01/04/1990 00:00	4	4	GREATER THAN 50MPH	VERGE	300	SINGLE ARM	NOT APPLICABLE	RIGID COLUMN	URBIS	AXIA 2 S1	PETITJEAN	STAINLESS STEEL	5	NOT APPLICABI	SEVERN				
46102117	PHOENIX PARKWAY	Scunthorpe	489167.41	412797.88	79	7059	00201855	01/04/1990 00:00	4	4	GREATER THAN 50MPH	VERGE	300	SINGLE ARM	NOT APPLICABLE	RIGID COLUMN	URBIS	AXIA 2 S1	PETITJEAN	STAINLESS STEEL	5	NOT APPLICABI	SEVERN				
46102117	PHOENIX PARKWAY	Scunthorpe	488642.16	412896.07	7X	7088	00201884	01/04/1990 00:00	4	4	LESS THAN 30MPH	VERGE	300	SINGLE ARM	NOT APPLICABLE	RIGID COLUMN	URBIS	AXIA 2 S1	PETITJEAN	STAINLESS STEEL	5	NOT APPLICABI	SEVERN				
46102117	PHOENIX PARKWAY	Scunthorpe	487659.01	412943.53	8	7070	00201866	01/04/1990 00:00	4	4	GREATER THAN 50MPH	VERGE	300	SINGLE ARM	NOT APPLICABLE	RIGID COLUMN	URBIS	AXIA 2 S1	PETITJEAN	STAINLESS STEEL	5	NOT APPLICABI	SEVERN				
46102117	PHOENIX PARKWAY	Scunthorpe	489192.38	412797.78	80	7060	00201856	01/04/1990 00:00	4	4	GREATER THAN 50MPH	VERGE	300	SINGLE ARM	NOT APPLICABLE	RIGID COLUMN	URBIS	AXIA 2 S1	PETITJEAN	STAINLESS STEEL	5	NOT APPLICABI	SEVERN				
46102117	PHOENIX PARKWAY	Scunthorpe	489220.74	412797.81	81	7061	00201857	01/04/1990 00:00	4	4	BETWEEN 30-50 MPH	BACK OF FOOTPATH	0	POST TOP	MID GREY	RIGID COLUMN	URBIS	AXIA 2 S1	PETITJEAN	SHEET STEEL	10	PAINTED	THAMES				
46102117	PHOENIX PARKWAY	Scunthorpe	489217.47	412813.47	82	7062	00201858	01/04/1990 00:00	4	4	BETWEEN 30-50 MPH	BACK OF FOOTPATH	0	POST TOP	MID GREY	RIGID COLUMN	URBIS	AXIA 2 S1	PETITJEAN	SHEET STEEL	10	PAINTED	THAMES				
46102117	PHOENIX PARKWAY	Scunthorpe	488637.92	412920.2	8X	7089	00201885	31/08/2017 00:00	4	4	LESS THAN 30MPH	SPLITTER ISLAND	300	SINGLE ARM	NOT APPLICABLE	RIGID COLUMN	URBIS	AXIA 2 S1	PETITJEAN	STAINLESS STEEL	5	NOT APPLICABI	SEVERN				
46102117	PHOENIX PARKWAY	Scunthorpe	487678.89	412949.07	9	7071	00201867	01/04/1990 00:00	4	4	GREATER THAN 50MPH	VERGE	300	SINGLE ARM	NOT APPLICABLE	RIGID COLUMN	URBIS	AXIA 2 S1	PETITJEAN	STAINLESS STEEL	5	NOT APPLICABI	SEVERN				
46102118	FOOTWAY BETWEEN GLOUCESTER COURT AND GRA	Scunthorpe	489099	412528	1	7000	00201888	01/04/2006 00:00	4	4	NOT ON A ROAD	BACK OF FOOTPATH	0	POST TOP	NOT APPLICABLE	MID HINGED	URBIS	AXIA 2 S1	STANTON	SHEET STEEL	6	GALVANISED	LEVEN				
46102119	ASHBY HIGH STREET	Scunthorpe	490644.08	408631.19	1	7000	00201889	01/04/2004 00:00	1	3	LESS THAN 30MPH	BACK OF FOOTPATH	1500	SINGLE ARM	NOT APPLICABLE	RIGID COLUMN	URBIS	AXIA 2 S1	PETITJEAN	SHEET STEEL	10	GALVANISED	THAMES				
46102119	ASHBY HIGH STREET	Scunthorpe	489344	408648	1	7058	04200125	01/03/2017 00:00	1	3	LESS THAN 30MPH	BACK OF FOOTPATH	500	SINGLE ARM	NOT APPLICABLE	RIGID COLUMN	HOLOPHANE	VMAX V2 L064 LED	VALMONT ST	SHEET STEEL	8	GALVANISED	THAMES				
46102119	ASHBY HIGH STREET	Scunthorpe	490409.71	408647.03	10	7009	00201898	01/04/2012 00:00	1	3	LESS THAN 30MPH	BACK OF FOOTPATH	1000	SINGLE ARM	NOT APPLICABLE	RIGID COLUMN	URBIS	AXIA 2 S1	STANTON	SHEET STEEL	8	NOT APPLICABI	THAMES				
46102119	ASHBY HIGH STREET	Scunthorpe	490370.54	408637.52	11FP	7010	00201899	01/04/1984 00:00	1	3	LESS THAN 30MPH	BACK OF FOOTPATH	1000	SINGLE ARM	NOT APPLICABLE	RIGID COLUMN	URBIS	AXIA 2 S1	PETITJEAN	SHEET STEEL	8	GALVANISED	THAMES				
46102119	ASHBY HIGH STREET	Scunthorpe	490342.53	408640.04	12FP	7011	00201900	01/04/1984 00:00	1	3	LESS THAN 30MPH	BACK OF FOOTPATH	1250	SINGLE ARM	NOT APPLICABLE	RIGID COLUMN	URBIS	AXIA 2 S1	PETITJEAN	SHEET STEEL	8	GALVANISED	THAMES				
46102119	ASHBY HIGH STREET	Scunthorpe	490314.82	408642.87	13FP	7012	00201901	26/06/2019 00:00	1	3	LESS THAN 30MPH	BACK OF FOOTPATH	1000	SINGLE ARM	NOT APPLICABLE	RIGID COLUMN	URBIS	AXIA 2 S1	MALLATITE	TUBULAR STEEL	8	GALVANISED	TUBULAR				
46102119	ASHBY HIGH STREET	Scunthorpe	490281.68	408660.55	14	7013	00201902	01/04/2012 00:00	1	3	LESS THAN 30MPH	BACK OF FOOTPATH	1000	SINGLE ARM	NOT APPLICABLE	RIGID COLUMN	URBIS	AXIA 2 S1	STANTON	SHEET STEEL	8	NOT APPLICABI	THAMES				
46102119	ASHBY HIGH STREET	Scunthorpe	490253.81	408649.5	15FP	7014	00201903	01/04/2012 00:00	1	3	LESS THAN 30MPH	BACK OF FOOTPATH	1000	SINGLE ARM	NOT APPLICABLE	RIGID COLUMN	URBIS	AXIA 2 S1	STANTON	SHEET STEEL	8	NOT APPLICABI	THAMES				
46102119	ASHBY HIGH STREET	Scunthorpe	490222.08	408652.93	16	7015	00201904	01/04/2012 00:00	1	3	LESS THAN 30MPH	BACK OF FOOTPATH	1000	SINGLE ARM	NOT APPLICABLE	RIGID COLUMN	URBIS	AXIA 2 S1	STANTON	SHEET STEEL	8	NOT APPLICABI	THAMES				
46102119	ASHBY HIGH STREET	Scunthorpe	490195.15	408665.86	17FP	7016	00201905	01/04/1999 00:00	1	3	LESS THAN 30MPH	BACK OF FOOTPATH	300	SINGLE ARM	GREEN	RIGID COLUMN	NORAL	HORIZON	FABRIKAT	TUBULAR STEEL	10	PAINTED	STEPPED TUBULAR				
46102119	ASHBY HIGH STREET	Scunthorpe	490167.48	408654.21	18	7017	00201906	01/04/1999 00:00	1	3	LESS THAN 30MPH	BACK OF FOOTPATH	300	SINGLE ARM	GREEN	RIGID COLUMN	NORAL	HORIZON	FABRIKAT	TUBULAR STEEL	10	PAINTED	STEPPED TUBULAR				
46102119	ASHBY HIGH STREET	Scunthorpe	490141.27	408667.18	19	7018	00201907	01/04/1999 00:00	1	3	LESS THAN 30MPH	BACK OF FOOTPATH	300	SINGLE ARM	GREEN	RIGID COLUMN	NORAL	HORIZON	FABRIKAT	TUBULAR STEEL	10	PAINTED	STEPPED TUBULAR				
46102119	ASHBY HIGH STREET	Scunthorpe	489446.71	408634.8	1BB	7056	00201945	01/04/2013 00:00	1	3	LESS THAN 30MPH	FRONT OF FOOTPATH	0	POST TOP	BLACKWHITE	RIGID COLUMN	WRTL	STELA WIDE 52 LED	MALLATITE	TUBULAR STEEL	6	GALVANISED	TUBULAR				
46102119	ASHBY HIGH STREET	Scunthorpe	490618.95	408635.14	2	7001	00201890	01/04/2012 00:00	1	3	LESS THAN 30MPH	BACK OF FOOTPATH	1000	SINGLE ARM	NOT APPLICABLE	RIGID COLUMN	URBIS	AXIA 2 S1	STANTON	SHEET STEEL	8	GALVANISED	THAMES				
46102119	ASHBY HIGH STREET	Scunthorpe	489332	408656	2	7059	04200126	01/03/2017 00:00	1	3	LESS THAN 30MPH	VERGE	500	SINGLE ARM	NOT APPLICABLE	RIGID COLUMN	HOLOPHANE	VMAX V2 L064 LED	VALMONT ST	SHEET STEEL	8	GALVANISED	THAMES				
46102119	ASHBY HIGH STREET	Scunthorpe	490112.91	408654.25	20	7019	00201908	01/04/1999 00:00	1	3	LESS THAN 30MPH	BACK OF FOOTPATH	300	SINGLE ARM	GREEN	RIGID COLUMN	NORAL	HORIZON	FABRIKAT	TUBULAR STEEL	10	PAINTED	STEPPED TUBULAR				
46102119	ASHBY HIGH STREET	Scunthorpe	490085.59	408667.53	21FP	7020	00201909	01/04/1999 00:00	1	3	LESS THAN 30MPH	BACK OF FOOTPATH	300	SINGLE ARM	GREEN	RIGID COLUMN	NORAL	HORIZON	FABRIKAT	TUBULAR STEEL	10	PAINTED	STEPPED TUBULAR				
46102119	ASHBY HIGH STREET	Scunthorpe	490055.13	408651.5	22	7021	00201910	01/04/1999 00:00	1	3	LESS THAN 30MPH	BACK OF FOOTPATH	300	SINGLE ARM	GREEN	RIGID COLUMN	NORAL	HORIZON	FABRIKAT	TUBULAR STEEL	10	PAINTED	STEPPED TUBULAR				
46102119	ASHBY HIGH STREET	Scunthorpe	490020.3	408658.94	23FP	7022	00201911	01/04/1999 00:00	1	3	LESS THAN 30MPH	BACK OF FOOTPATH	300	SINGLE ARM	GREEN	RIGID COLUMN	NORAL	HORIZON	FABRIKAT	TUBULAR STEEL	10	PAINTED	STEPPED TUBULAR				
46102119	ASHBY HIGH STREET	Scunthorpe	489987.23	408644.72	24	7023	00201912	01/04/1999 00:00	1	3	LESS THAN 30MPH	BACK OF FOOTPATH	300	SINGLE ARM	GREEN	RIGID COLUMN	NORAL	HORIZON	FABRIKAT	TUBULAR STEEL	10	PAINTED	STEPPED TUBULAR				
46102119	ASHBY HIGH STREET	Scunthorpe	489952.45	408651.89	25	7024	00201913	01/04/1999 00:00	1	3	LESS THAN 30MPH	BACK OF FOOTPATH	300	SINGLE ARM	GREEN	RIGID COLUMN	NORAL	HORIZON	FABRIKAT	TUBULAR STEEL	10	PAINTED	STEPPED TUBULAR				
46102119	ASHBY HIGH STREET	Scunthorpe	489921	408649.98	26	7025	00201914	01/04/1999 00:00	1	3	LESS THAN 30MPH	BACK OF FOOTPATH	300	SINGLE ARM	GREEN	RIGID COLUMN	NORAL	HORIZON	FABRIKAT	TUBULAR STEEL	10	PAINTED	STEPPED TUBULAR				
46102119	ASHBY HIGH STREET	Scunthorpe	489884.06	408646.7	27FP	7026	00201915	01/04/1999 00:00	1	3	LESS THAN 30MPH	BACK OF FOOTPATH	300	SINGLE ARM	GREEN	RIGID COLUMN	NORAL	HORIZON	FABRIKAT	TUBULAR STEEL	10	PAINTED	STEPPED TUBULAR				
46102119	ASHBY HIGH STREET	Scunthorpe	489858.21	408634.49	28FP	7027	00201916	01/04/1999 00:00	1	3	LESS THAN 30MPH	FRONT OF FOOTPATH	300	SINGLE ARM	GREEN	RIGID COLUMN	NORAL	HORIZON	FABRIKAT	TUBULAR STEEL	10	PAINTED	STEPPED TUBULAR				
46102119	ASHBY HIGH STREET	Scunthorpe	489829.03	408644.27	29	7028	00201917	01/04/1999 00:00	1	3	LESS THAN 30MPH	BACK OF FOOTPATH	300	SINGLE ARM	GREEN	RIGID COLUMN	NORAL	HORIZON	FABRIKAT	TUBULAR STEEL	10	PAINTED	STEPPED TUBULAR				
46102119	ASHBY HIGH STREET	Scunthorpe	489446.71	408645.94	2BB	7057	00201946	01/04/2013 00:00	1	3	LESS THAN 30MPH	FRONT OF FOOTPATH	0	POST TOP	BLACKWHITE	RIGID COLUMN	WRTL	STELA WIDE 52 LED	MALLATITE	TUBULAR STEEL	6	GALVANISED	TUBULAR				
46102119	ASHBY HIGH STREET	Scunthorpe	490596.42	408636.14	3	7002	00201891	01/04/2012 00:00	1	3	LESS THAN 30MPH	BACK OF FOOTPATH	1000	SINGLE ARM	NOT APPLICABLE	RIGID COLUMN	URBIS	AXIA 2 S1	STANTON	SHEET STEEL	8	NOT APPLICABI	THAMES				
46102119	ASHBY HIGH STREET	Scunthorpe	489331	408674	3	7060	04200127	01/03/2017 00:00	1	3	LESS THAN 30MPH	VERGE	500	SINGLE ARM	NOT APPLICABLE	RIGID COLUMN	HOLOPHANE	VMAX V2 L064 LED	VALMONT ST	SHEET STEEL	8	GALVANISED	THAMES				
46102119	ASHBY HIGH STREET	Scunthorpe	489801.44	408645.66	30	7029	00201918	01/04/1999 00:00	1	3	LESS THAN 30MPH	BACK OF FOOTPATH	300	SINGLE ARM	GREEN	RIGID COLUMN	NORAL	HORIZON	FABRIKAT	TUBULAR STEEL	10	PAINTED	STEPPED TUBULAR				
46102119	ASHBY HIGH STREET	Scunthorpe	489768.2	408646.76	31FP	7030	00201919	01/04/1999 00:00	1	3	LESS THAN 30MPH	BACK OF FOOTPATH	300	SINGLE ARM	GREEN	RIGID COLUMN	NORAL	HORIZON	FABRIKAT	TUBULAR STEEL	10	PAINTED	STEPPED TUBULAR				
46102119	ASHBY HIGH STREET	Scunthorpe	489744.86	408634.55	32	7031	00201920	01/04/1999 00:00	1	3	LESS THAN 30MPH	FRONT OF FOOTPATH	300	SINGLE ARM	GREEN	RIGID COLUMN	NORAL	HORIZON	FABRIKAT	TUBULAR STEEL	10	PAINTED	STEPPED TUBULAR				
46102119	ASHBY HIGH STREET	Scunthorpe	489714.06	408645.94	33	7032	00201921	01/04/1999 00:00	1	3	LESS THAN 30MPH	FRONT OF FOOTPATH	300	SINGLE ARM	GREEN	RIGID COLUMN

46102130	EASTOFT ROAD	Luddington and Haldenby Parish	482744.82	416364.56	15	7004	00202081	01/04/2006 00:00	4	2	BETWEEN 30-50 MPH	BACK OF FOOTPATH	0	POST TOP	NOT APPLICABLE	RIGID COLUMN	URBIS	AXIA 2 S1	MALLATITE	TUBULAR STEEL	6	GALVANISED	STEPPED TUBULAR
46102130	EASTOFT ROAD	Luddington and Haldenby Parish	482710.63	416320.86	16	7005	00202082	01/04/2006 00:00	4	2	BETWEEN 30-50 MPH	BACK OF FOOTPATH	0	POST TOP	NOT APPLICABLE	RIGID COLUMN	URBIS	AXIA 2 S1	MALLATITE	TUBULAR STEEL	6	GALVANISED	STEPPED TUBULAR
46102130	EASTOFT ROAD	Luddington and Haldenby Parish	482699.31	416280.77	17	7025	00202102	21/11/2018 00:00	4	2	LESS THAN 30MPH	ON POLE	300	SINGLE ARM	DARK GREY	POLE MOUNTED	URBIS	AXIA 2 S1	WOODEN PO	WOOD	5	PAINTED	PUDSEY DIAMOND
46102130	EASTOFT ROAD	Luddington and Haldenby Parish	482693.78	416234.83	18	7026	00202103	21/11/2018 00:00	4	2	LESS THAN 30MPH	ON POLE	300	SINGLE ARM	DARK GREY	POLE MOUNTED	URBIS	AXIA 2 S1	WOODEN PO	WOOD	5	PAINTED	PUDSEY DIAMOND
46102130	EASTOFT ROAD	Luddington and Haldenby Parish	482688.39	416189.68	19	7027	00202104	21/11/2018 00:00	4	2	LESS THAN 30MPH	ON POLE	300	SINGLE ARM	DARK GREY	POLE MOUNTED	URBIS	AXIA 2 S1	WOODEN PO	WOOD	5	PAINTED	PUDSEY DIAMOND
46102130	EASTOFT ROAD	Luddington and Haldenby Parish	482969.94	416685.02	2	7029	00202106	01/04/1993 00:00	4	2	LESS THAN 30MPH	BACK OF FOOTPATH	800	SINGLE ARM	NOT APPLICABLE	RIGID COLUMN	URBIS	AXIA 2 S1	PETITJEAN	SHEET STEEL	6	GALVANISED	DAER
46102130	EASTOFT ROAD	Luddington and Haldenby Parish	482683.09	416143.44	20	7008	00202085	21/11/2018 00:00	4	2	LESS THAN 30MPH	ON POLE	300	SINGLE ARM	DARK GREY	POLE MOUNTED	URBIS	AXIA 2 S1	WOODEN PO	WOOD	5	PAINTED	PUDSEY DIAMOND
46102130	EASTOFT ROAD	Luddington and Haldenby Parish	482675.07	416096.55	21	7018	00202095	21/11/2018 00:00	4	2	LESS THAN 30MPH	ON POLE	300	SINGLE ARM	DARK GREY	POLE MOUNTED	URBIS	AXIA 2 S1	WOODEN PO	WOOD	5	PAINTED	PUDSEY DIAMOND
46102130	EASTOFT ROAD	Luddington and Haldenby Parish	482665.6	416053.7	22	7006	00202083	21/11/2018 00:00	4	2	LESS THAN 30MPH	ON POLE	300	SINGLE ARM	DARK GREY	POLE MOUNTED	URBIS	AXIA 2 S1	WOODEN PO	WOOD	5	PAINTED	PUDSEY DIAMOND
46102130	EASTOFT ROAD	Luddington and Haldenby Parish	482656.37	416009.92	23	7007	00202084	21/11/2018 00:00	4	2	LESS THAN 30MPH	ON POLE	300	SINGLE ARM	DARK GREY	POLE MOUNTED	URBIS	AXIA 2 S1	WOODEN PO	WOOD	5	PAINTED	PUDSEY DIAMOND
46102130	EASTOFT ROAD	Luddington and Haldenby Parish	482666.31	416001.31	24	7009	00202086	21/11/2018 00:00	4	2	LESS THAN 30MPH	ON POLE	300	SINGLE ARM	DARK GREY	POLE MOUNTED	URBIS	AXIA 2 S1	WOODEN PO	WOOD	5	PAINTED	PUDSEY DIAMOND
46102130	EASTOFT ROAD	Luddington and Haldenby Parish	482635.57	415955.22	25	7010	00202087	21/11/2018 00:00	4	2	LESS THAN 30MPH	ON POLE	300	SINGLE ARM	DARK GREY	POLE MOUNTED	URBIS	AXIA 2 S1	WOODEN PO	WOOD	5	PAINTED	PUDSEY DIAMOND
46102130	EASTOFT ROAD	Luddington and Haldenby Parish	482609.56	415912.31	26	7011	00202088	01/04/2004 00:00	4	2	LESS THAN 30MPH	ON POLE	500	SINGLE ARM	NOT APPLICABLE	POLE MOUNTED	URBIS	AXIA 2 S1	WOODEN PO	WOOD	5	NOT APPLICABI	Not Applicable
46102130	EASTOFT ROAD	Luddington and Haldenby Parish	482574.57	415873.13	27	7012	00202089	01/04/2004 00:00	4	2	LESS THAN 30MPH	ON POLE	500	SINGLE ARM	NOT APPLICABLE	POLE MOUNTED	URBIS	AXIA 2 S1	WOODEN PO	WOOD	5	NOT APPLICABI	Not Applicable
46102130	EASTOFT ROAD	Luddington and Haldenby Parish	482541.38	415833.19	28	7013	00202090	22/11/2018 00:00	4	2	LESS THAN 30MPH	ON POLE	300	SINGLE ARM	DARK GREY	POLE MOUNTED	URBIS	AXIA 2 S1	WOODEN PO	WOOD	5	PAINTED	PUDSEY DIAMOND
46102130	EASTOFT ROAD	Luddington and Haldenby Parish	482509.99	415790.86	29	7014	00202091	22/11/2018 00:00	4	2	LESS THAN 30MPH	ON POLE	300	SINGLE ARM	DARK GREY	POLE MOUNTED	URBIS	AXIA 2 S1	WOODEN PO	WOOD	5	PAINTED	PUDSEY DIAMOND
46102130	EASTOFT ROAD	Luddington and Haldenby Parish	482958.25	416661.05	3	7030	00202107	01/04/1993 00:00	4	2	LESS THAN 30MPH	BACK OF FOOTPATH	800	SINGLE ARM	NOT APPLICABLE	RIGID COLUMN	URBIS	AXIA 2 S1	PETITJEAN	SHEET STEEL	6	GALVANISED	DAER
46102130	EASTOFT ROAD	Luddington and Haldenby Parish	482479.89	415748.8	30	7015	00202092	22/11/2018 00:00	4	2	LESS THAN 30MPH	ON POLE	300	SINGLE ARM	DARK GREY	POLE MOUNTED	URBIS	AXIA 2 S1	WOODEN PO	WOOD	5	PAINTED	PUDSEY DIAMOND
46102130	EASTOFT ROAD	Luddington and Haldenby Parish	482451.72	415705.92	31	7016	00202093	22/11/2018 00:00	4	2	LESS THAN 30MPH	ON POLE	300	SINGLE ARM	DARK GREY	POLE MOUNTED	URBIS	AXIA 2 S1	WOODEN PO	WOOD	5	PAINTED	PUDSEY DIAMOND
46102130	EASTOFT ROAD	Luddington and Haldenby Parish	482383.75	415625.97	32	7017	00202094	01/04/2004 00:00	4	2	LESS THAN 30MPH	ON POLE	500	SINGLE ARM	NOT APPLICABLE	POLE MOUNTED	URBIS	AXIA 2 S1	WOODEN PO	WOOD	5	NOT APPLICABI	Not Applicable
46102130	EASTOFT ROAD	Luddington and Haldenby Parish	482945.89	416644.18	4	7031	00202108	01/04/1993 00:00	4	2	LESS THAN 30MPH	BACK OF FOOTPATH	800	SINGLE ARM	NOT APPLICABLE	RIGID COLUMN	URBIS	AXIA 2 S1	PETITJEAN	SHEET STEEL	6	GALVANISED	DAER
46102130	EASTOFT ROAD	Luddington and Haldenby Parish	482929.97	416623.67	5	7019	00202096	01/04/1993 00:00	4	2	LESS THAN 30MPH	BACK OF FOOTPATH	800	SINGLE ARM	NOT APPLICABLE	RIGID COLUMN	URBIS	AXIA 2 S1	PETITJEAN	SHEET STEEL	6	GALVANISED	DAER
46102130	EASTOFT ROAD	Luddington and Haldenby Parish	482905.01	416607.76	6	7020	00202097	01/04/1993 00:00	4	2	LESS THAN 30MPH	VERGE	800	SINGLE ARM	NOT APPLICABLE	RIGID COLUMN	URBIS	AXIA 2 S1	PETITJEAN	SHEET STEEL	6	GALVANISED	DAER
46102130	EASTOFT ROAD	Luddington and Haldenby Parish	482882	416585	7	7032	04200024	01/04/1993 00:00	4	2	LESS THAN 30MPH	VERGE	800	SINGLE ARM	NOT APPLICABLE	RIGID COLUMN	URBIS	AXIA 2 S1	PETITJEAN	SHEET STEEL	6	GALVANISED	DAER
46102130	EASTOFT ROAD	Luddington and Haldenby Parish	482857	416556	8	7033	04200025	01/04/1993 00:00	4	2	LESS THAN 30MPH	VERGE	800	SINGLE ARM	NOT APPLICABLE	RIGID COLUMN	URBIS	AXIA 2 S1	PETITJEAN	SHEET STEEL	6	GALVANISED	DAER
46102130	EASTOFT ROAD	Luddington and Haldenby Parish	482843	416536	9	7034	04200026	01/04/1993 00:00	4	2	LESS THAN 30MPH	VERGE	800	SINGLE ARM	NOT APPLICABLE	RIGID COLUMN	URBIS	AXIA 2 S1	PETITJEAN	SHEET STEEL	6	GALVANISED	DAER
46102132	FERRY ROAD EAST	Barrow upon Humber Parish	507134.85	421639.86	1	7000	00202109	01/04/1973 00:00	4	1	LESS THAN 30MPH	BACK OF FOOTPATH	800	SINGLE ARM	LIGHT GREY	RIGID COLUMN	URBIS	AXIA 2 S1	PETITJEAN	SHEET STEEL	6	PAINTED	DAER
46102132	FERRY ROAD EAST	Barrow upon Humber Parish	506814.87	421724.94	10	7009	00202118	17/04/2018 00:00	4	1	LESS THAN 30MPH	ON POLE	300	SINGLE ARM	NOT APPLICABLE	POLE MOUNTED	URBIS	AXIA 2 S1	WOODEN PO	WOOD	6	NOT APPLICABI	PUDSEY DIAMOND
46102132	FERRY ROAD EAST	Barrow upon Humber Parish	506778.4	421732.05	11	7010	00202119	17/04/2018 00:00	4	1	LESS THAN 30MPH	ON POLE	300	SINGLE ARM	NOT APPLICABLE	POLE MOUNTED	URBIS	AXIA 2 S1	WOODEN PO	WOOD	6	NOT APPLICABI	PUDSEY DIAMOND
46102132	FERRY ROAD EAST	Barrow upon Humber Parish	506747.61	421737.59	12	7011	00202120	11/04/2019 00:00	4	1	GREATER THAN 50MPH	BACK OF FOOTPATH	0	POST TOP	NOT APPLICABLE	RIGID COLUMN	URBIS	AXIA 2 S1	MALLATITE	TUBULAR STEEL	6	GALVANISED	TUBULAR
46102132	FERRY ROAD EAST	Barrow upon Humber Parish	506710.75	421728.53	13	7012	00202121	01/04/1973 00:00	4	1	GREATER THAN 50MPH	VERGE	800	SINGLE ARM	MID GREY	RIGID COLUMN	URBIS	AXIA 2 S1	PETITJEAN	SHEET STEEL	6	PAINTED	DAER
46102132	FERRY ROAD EAST	Barrow upon Humber Parish	506723.36	421744.03	14	7013	00202122	01/04/1973 00:00	4	1	GREATER THAN 50MPH	VERGE	800	SINGLE ARM	MID GREY	RIGID COLUMN	URBIS	AXIA 2 S1	PETITJEAN	SHEET STEEL	6	PAINTED	DAER
46102132	FERRY ROAD EAST	Barrow upon Humber Parish	506702.16	421776.39	15	7014	00202123	01/04/1993 00:00	4	1	GREATER THAN 50MPH	VERGE	800	SINGLE ARM	NOT APPLICABLE	RIGID COLUMN	URBIS	AXIA 2 S1	PETITJEAN	SHEET STEEL	6	GALVANISED	DAER
46102132	FERRY ROAD EAST	Barrow upon Humber Parish	507104.86	421640.55	2	7001	00202110	01/04/1973 00:00	4	1	LESS THAN 30MPH	BACK OF FOOTPATH	800	SINGLE ARM	LIGHT GREY	RIGID COLUMN	URBIS	AXIA 2 S1	PETITJEAN	SHEET STEEL	5	PAINTED	DAER
46102132	FERRY ROAD EAST	Barrow upon Humber Parish	507077.32	421659.24	3	7002	00202111	01/04/1973 00:00	4	1	LESS THAN 30MPH	BACK OF FOOTPATH	800	SINGLE ARM	MID GREY	RIGID COLUMN	URBIS	AXIA 2 S1	PETITJEAN	SHEET STEEL	6	PAINTED	DAER
46102132	FERRY ROAD EAST	Barrow upon Humber Parish	507050.56	421658.79	4FP	7003	00202112	01/04/1973 00:00	4	1	LESS THAN 30MPH	BACK OF FOOTPATH	800	SINGLE ARM	LIGHT GREY	RIGID COLUMN	URBIS	AXIA 2 S1	PETITJEAN	SHEET STEEL	6	PAINTED	DAER
46102132	FERRY ROAD EAST	Barrow upon Humber Parish	507021.1	421674.08	5	7004	00202113	01/04/1973 00:00	4	1	LESS THAN 30MPH	VERGE	800	SINGLE ARM	NOT APPLICABLE	RIGID COLUMN	URBIS	AXIA 2 S1	PETITJEAN	SHEET STEEL	6	GALVANISED	DAER
46102132	FERRY ROAD EAST	Barrow upon Humber Parish	506990.92	421691.61	6	7005	00202114	01/04/1973 00:00	4	1	LESS THAN 30MPH	BACK OF FOOTPATH	800	SINGLE ARM	LIGHT GREY	RIGID COLUMN	URBIS	AXIA 2 S1	PETITJEAN	SHEET STEEL	6	PAINTED	DAER
46102132	FERRY ROAD EAST	Barrow upon Humber Parish	506951.94	421698.67	7	7006	00202115	01/04/1973 00:00	4	1	LESS THAN 30MPH	BACK OF FOOTPATH	800	SINGLE ARM	LIGHT GREY	RIGID COLUMN	URBIS	AXIA 2 S1	PETITJEAN	SHEET STEEL	6	PAINTED	DAER
46102132	FERRY ROAD EAST	Barrow upon Humber Parish	506911.33	421707.4	8	7007	00202116	01/04/1973 00:00	4	1	LESS THAN 30MPH	BACK OF FOOTPATH	800	SINGLE ARM	LIGHT GREY	RIGID COLUMN	URBIS	AXIA 2 S1	PETITJEAN	SHEET STEEL	6	PAINTED	DAER
46102132	FERRY ROAD EAST	Barrow upon Humber Parish	506866.27	421715.01	9	7008	00202117	01/04/1973 00:00	4	1	LESS THAN 30MPH	BACK OF FOOTPATH	800	SINGLE ARM	LIGHT GREY	RIGID COLUMN	URBIS	AXIA 2 S1	PETITJEAN	SHEET STEEL	6	PAINTED	DAER
46102133	FLEETGATE	Barton upon Humber Parish	502863.51	422438.78	1	7000	00202124	01/04/1970 00:00	5	2	LESS THAN 30MPH	BACK OF FOOTPATH	0	POST TOP	BLACK	RIGID COLUMN	URBIS	AXIA 2 S1	CU	TUBULAR STEEL	5	PAINTED	STEPPED TUBULAR
46102133	FLEETGATE	Barton upon Humber Parish	502846.03	422314.08	1	7018	00202142	01/04/1988 00:00	5	2	LESS THAN 30MPH	BACK OF FOOTPATH	0	POST TOP	BLACK	RIGID COLUMN	DW WINDSOR	STREET	VICT	CAST IRON	5	PAINTED	GASCON
46102133	FLEETGATE	Barton upon Humber Parish	502809.5	422225	1	7017	00202141	01/04/1988 00:00	5	2	LESS THAN 30MPH	BACK OF FOOTPATH	0	POST TOP	BLACK	RIGID COLUMN	DW WINDSOR	STREET	VICT	CAST IRON	5	PAINTED	GASCON
46102133	FLEETGATE	Barton upon Humber Parish	502816.45	422219.69	10	7009	00202133	01/04/1988 00:00	5	2	LESS THAN 30MPH	WALL	300	SINGLE ARM	NOT APPLICABLE	WALL MOUNTED	URBIS	AXIA 2 S1	WALL MOUN	NOT APPLICABLE	5	NOT APPLICABI	Not Applicable
46102133	FLEETGATE	Barton upon Humber Parish	502809.27	422179.13	11	7010	00202134	01/04/1988 00:00	5	2	LESS THAN 30MPH	BACK OF FOOTPATH	800	SINGLE ARM	BLACK	RIGID COLUMN	URBIS	AXIA 2 S1	MALLATITE	TUBULAR STEEL	5	PAINTED	STEPPED TUBULAR
46102133	FLEETGATE	Barton upon Humber Parish	502791.21	422152.19	12	7011	00202135	01/04/2001 00:00	5	2	LESS THAN 30MPH	BACK OF FOOTPATH	0	POST TOP	NOT APPLICABLE	RIGID COLUMN	URBIS	AXIA 2 S1	MALLATITE	TUBULAR STEEL	6	GALVANISED	STEPPED TUBULAR
46102133	FLEETGATE	Barton upon Humber Parish	502783.53	422117.32	13	7012	00202136	01/04/2015 00:00	5	2	LESS THAN 30MPH	BACK OF FOOTPATH	0	POST TOP	NOT APPLICABLE	RIGID COLUMN	URBIS	AXIA 2 S1	MALLATITE	TUBULAR STEEL	6	GALVANISED	TUBULAR
46102133	FLEETGATE	Barton upon Humber Parish	502804.15	422212.1	1X	7013	00202137	01/04/1994 00:00	5	2	LESS THAN 30MPH	BACK OF FOOTPATH	800	SINGLE ARM	BLACK	RIGID COLUMN	SUGG	ROCHESTER MED	CU	TUBULAR STEEL	5	PAINTED	STEPPED TUBULAR
46102133	FLEETGATE	Barton upon Humber Parish	502866.85	422414.68	2	7001	00202125	01/04/1988 00:00	5	2	LESS THAN 30MPH	WALL	300	SINGLE ARM	NOT APPLICABLE	WALL MOUNTED	URBIS	AXIA 2 S1	WALL MOUN	NOT APPLICABLE	5	NOT APPLICABI	Not Applicable
46102133	FLEETGATE	Barton upon Humber Parish	502813.21	422196.31	2XFP	7014	00202138	01/04/1994 00:00	5	2	LESS THAN 30MPH	BACK OF FOOTPATH	800	SINGLE ARM	BLACK	RIGID COLUMN	SUGG	ROCHESTER MED	CU	TUBULAR STEEL	5	PAINTED	STEPPED TUBULAR
46102133	FLEETGATE	Barton upon Humber Parish	502855.69	422396.3	3	7002	00202126	01/04/1988 00:00	5	2	LESS THAN 30MPH	WALL	300	SINGLE ARM	NOT APPLICABLE	WALL MOUNTED	URBIS	AXIA 2 S1	WALL MOUN	NOT APPLICABLE	5	NOT APPLICABI	Not Applicable
46102133	FLEETGATE	Barton upon Humber Parish	502797.05	422201.46	3X	7015	00202139	01/04/1994 00:00	5	2	LESS THAN 30MPH	BACK OF FOOTPATH	800	SINGLE ARM	BLACK	RIGID COLUMN	SUGG	ROCHESTER MED	CU	TUBULAR STEEL	5	PAINTED	STEPPED TUBULAR
46102133	FLEETGATE	Barton upon Humber Parish	502859.32	422369.58	4	7003	00202127	01/04/1988 00:00	5	2	LESS THAN 30MPH	WALL	300	SINGLE ARM	NOT APPLICABLE	WALL MOUNTED	URBIS	AXIA 2 S1	WALL MOUN	NOT APPLICABLE	5	NOT APPLICABI	Not Applicable
46102133	FLEETGATE	Barton upon Humber Parish	502845.24	422339.65	5	7004	00202128	01/04/1988 00:00	5	2	LESS THAN 30MPH	WALL	300	SINGLE ARM	NOT APPLICABLE	WALL MOUNTED	URBIS	AXIA 2 S1	WALL MOUN	NOT APPLICABLE	5	NOT APPLICABI	Not Applicable
46102133	FLEETGATE	Barton upon Humber Parish	502841.2	422322.08	6	7005	00202129	01/04/1970 00:00	5	2	LESS THAN 30MPH	WALL	300	SINGLE ARM	NOT APPLICABLE	POLE MOUNTED	URBIS	AXIA 2 S1	WALL MOUN	NOT APPLICABLE	5	NOT APPLICABI	Not Applicable
46102133	FLEETGATE	Barton upon Humber Parish	502839.99	422298.61	7	7006	00202130	01/04/1988 00:00	5	2	LESS THAN 30MPH	WALL	300	SINGLE ARM	NOT APPLICABLE	WALL MOUNTED	URBIS	AXIA 2 S1	WALL MOUN	NOT APPLICABLE	5	NOT APPLICABI	Not Applicable
46102133	FLEETGATE	Barton upon Humber Parish	502831.56	422274.02	8	7007	00202131	01/04/1988 00:00	5	2	LESS THAN 30MPH	WALL	300	SINGLE ARM	NOT APPLICABLE	WALL MOUNTED	URBIS	AXIA 2 S1	WALL MOUN	NOT APPLICABLE	5	NOT APPLICABI	Not Applicable
46102133	FLEETGATE	Barton upon Humber Parish	502817.05	422247.98	9	7008	00202132	01/04/1988 00:00	5	2	LESS THAN 30MPH	WALL	300	SINGLE ARM	NOT APPLICABLE	WALL MOUNTED	URBIS	AXIA 2 S1	WALL MOUN	NOT APPLICABLE	5	NOT APPLICABI	Not Applicable
46102134	GAINSBOROUGH ROAD	Kirton in Lindsey Parish	493400.7	398071.61	1	7000	00202143	01/04/1977 00:00	1	3	LESS THAN 30MPH	ON POLE	800	SINGLE ARM	NOT APPLICABLE	POLE MOUNTED	URBIS	AXIA 2 S1	WOODEN PO	WOOD	5	NOT APPLICABI	Not Applicable
46102134	GAINSBOROUGH ROAD	Kirton in Lindsey Parish	493379.01	398042.02	2FP	7001	00202144	01/04/2004 00:00	1	3	LESS THAN 30MPH	VERGE	500	SINGLE ARM	LIGHT GREY	RIGID COLUMN	URBIS	AXIA 2 S1	PETITJEAN	SHEET STEEL	5	PAINTED	DAER
46102135	GUNNESS LANE	Flixborough Parish	486093.18	413232.3	1	7000	00202145	01/04/2010 00:00	2	1	GREATER THAN 50MPH	VERGE	0	POST TOP	NOT APPLICABLE	RIGID COLUMN	URBIS	AXIA 2 S1	MALLATITE	TUBULAR STEEL	6	GALVANISED	TUBULAR
46102136	HART LANE	Winterton Parish	493108.92	418454.86	1	7000	00202146	01/04/1988 00:00	1	1	LESS THAN 30MPH	BACK OF FOOTPATH	300	SINGLE ARM	MID GREY	RIGID COLUMN	URBIS	AXIA 2 S1	PETITJEAN	SHEET STEEL	5	PAINTED	DAER
46102136	HART LANE	Winterton Parish	493118.86	418477.71	2	7001	00202147	01/04/1990 00:00	1	1	LESS THAN 30MPH	BACK OF FOOTPATH	300	SINGLE ARM	MID GREY	RIGID COLUMN	URBIS	AXIA 2 S1	PETITJEAN	SHEET STEEL	5	PAINTED	DAER
46102136	HART LANE	Winterton Parish	493118.73	418501.29	3	7002	00202148	01/04/1990 00:00	1	1	LESS THAN 30MPH	BACK OF FOOTPATH	300	SINGLE ARM	MID GREY	RIGID COLUMN	URBIS	AXIA 2 S1	PETITJEAN	SHEET STEEL	5	PAINTED	DAER
46102136	HART LANE	Winterton Parish	493119.27	418531.67	4	7003	00202149	01/04/1990 00:00	1	1	LESS THAN 30MPH	BACK OF FOOTPATH	300	SINGLE ARM	MID GREY	RIGID COLUMN	URBIS	AXIA 2 S1	PETITJEAN	SHEET STEEL	5	PAINTED	DAER
46102136	HART LANE	Winterton Parish	493120.39	418556.86	5	7004	00202150	01/04/1990 00:00	1	1	LESS THAN 30MPH	BACK OF FOOTPATH	300	SINGLE ARM	MID GREY	RIGID COLUMN	URBIS	AXIA 2 S1	PETITJEAN	SHEET STEEL	5	PAINTED	DAER
46102137	HAXEY LANE	Haxey Parish	477412.87	399705.17	1	7000	00202151	01/04/1991 00:00	6	2	LESS THAN 30MPH	BACK OF FOOTPATH	1000	SINGLE ARM	NOT APPLICABLE	RIGID COLUMN	URBIS	AXIA 2 S1	PETITJEAN	SHEET STEEL	8	GALVANISED	THAMES
46102137	HAXEY LANE	Haxey Parish	477379.41	399402.3	10	7009	00202160	01/04/1999 00:00	6	2	LESS THAN 30MPH	BACK OF FOOTPATH	1000	SINGLE ARM	NOT APPLICABLE	RIGID COLUMN	URBIS	AXIA 2 S1	PETITJEAN	SHEET STEEL	8	GALVANISED	THAMES
46102137	HAXEY LANE	Haxey Parish	477370.79	399360.11	11	7010	00202161	01/04/1999 00:00	6	2	LESS THAN 30MPH	BACK OF FOOTPATH	1000	SINGLE ARM	NOT APPLICABLE	RIGID COLUMN	URBIS	AXIA 2 S1	PETITJEAN	SHEET STEEL	8	GALVANISED	THAMES
46102137	HAXEY LANE	Haxey Parish	477362.66	399321.67	12	7011	00202162	01/04/1999 00:00	6	2	LESS THAN 30MPH	BACK OF FOOTPATH	1000	SINGLE ARM	NOT APPLICABLE	RIGID COLUMN	URBIS	AXIA 2 S1	PETITJEAN	SHEET STEEL	8	GALVANISED	THAMES
46102137	HAXEY LANE	Haxey Parish	477360.8	399299.64	13	7012	00202163	01/04/1999 00:00	6	2	LESS THAN 30MPH	BACK OF FOOTPATH	1000	SINGLE ARM	NOT APPLICABLE	RIGID COLUMN	URBIS	AXIA 2 S1	PETITJEAN	SHEET STEEL	8	GALVANISED	THAMES
46102137	HAXEY LANE	Haxey Parish	477343.37	399262.39	14	7013	00202164	01/04/1999 00:00	6	2	LESS THAN 30MPH	BACK OF FOOTPATH	1000	SINGLE ARM	NOT APPLICABLE	RIGID COLUMN	URBIS	AXIA 2 S1	PETITJEAN	SHEET STEEL	8	GALVANISED	THAMES
46102137	HAXEY LANE	Haxey Parish	477345.37	399221.86	15	7014	00202165	01/04/1999 00:00	6	2	LESS THAN 30MPH	BACK OF FOOTPATH	1000	SINGLE ARM	NOT APPLICABLE	RIGID COLUMN	URBIS	AXIA 2 S1	PETITJEAN	SHEET STEEL	8	GALVANISED	THAMES
46102137	HAXEY LANE	Haxey Parish	477330.84	399189.53	16	7015	00202166	01/04/1999 00:00	6	2	LESS THAN 30MPH	BACK OF FOOTPATH	1000	SINGLE ARM	NOT APPLICABLE	RIGID COLUMN	URBIS	AXIA 2 S1	PETITJEAN	SHEET STEEL	8	GALVANISED	THAMES
46102137	HAXEY LANE	Haxey Parish	477333.31	399154.7	17	7016	00202167	01/04/1999 00:00	6	2	LESS THAN 30MPH	BACK OF FOOTPATH	1000	SINGLE ARM	NOT APPLICABLE	RIGID COLUMN	URBIS	AXIA 2 S1	PETITJEAN	SHEET STEEL	8	GALVANISED	THAMES
46102137	HAXEY LANE	Haxey Parish	477328.06	399125.56	18	7017	00202168	01/04/1999 00:00	6	2	LESS THAN 30MPH	BACK OF FOOTPATH	1000	SINGLE ARM	NOT APPLICABLE	RIGID COLUMN	URBIS	AXIA 2 S1	PETITJEAN	SHEET STEEL	8	GALVANISED	THAMES
46102137	HAXEY LANE	Haxey Parish	477321.01	399083.42	19	7018	00202169	01/04/1999 00:00	6	2	LESS THAN 30MPH	BACK OF FOOTPATH	1000	SINGLE ARM	NOT APPLICABLE	RIGID COLUMN	URBIS	AXIA 2 S1	PETITJEAN	SHEET STEEL	8	GALVANISED	THAMES
46102137	HAXEY LANE	Haxey Parish	477429.08	399670.52	2	7001	00202152	01/04/1991 00:00	6	2	LESS THAN 30MPH	VERGE	1000	SINGLE ARM	NOT APPLICABLE	RIGID COLUMN	URBIS	AXIA 2 S1	PETITJEAN	SHEET STEEL	8	GALVANISED	THAMES
46102137	HAXEY LANE	Haxey Parish	477316.1	399055.13	20	7019	00202170	01/04/1999 00:00	6	2	LESS THAN 30MPH	BACK OF FOOTPATH	1000	SINGLE ARM	NOT APPLICABLE	RIGID COLUMN	URBIS	AXIA 2 S1	PETITJEAN	SHEET STEEL	8	GALVANISED	THAMES
46102137	HAXEY LANE	Haxey Parish	477310.19	399019.18	21	7020	00202171	01/04/1999 00:00	6	2	LESS THAN 30MPH	BACK OF FOOTPATH	1000	SINGLE ARM	NOT APPLICABLE	RIGID COLUMN	URBIS	AXIA 2 S1	PETITJEAN	SHEET STEEL	8	GALVANISED	THAMES
46102137	HAXEY LANE	Haxey Parish	477303.63	398982.41	22	7021	00202172	01/04/1999 00:00	6	2	LESS THAN 30MPH	BACK OF FOOTPATH	1000	SINGLE ARM	NOT APPLICABLE	RIGID COLUMN	URBIS	AXIA 2 S1	PETITJEAN	SHEET STEEL	8	GALVANISED	THAMES
46102137	HAXEY LANE	Haxey Parish	477299.43	398944.39	23	7022	00202173	01/04/1999 00:00	6	2	LESS THAN 30MPH	BACK OF FOOTPATH	1000	SINGLE ARM	NOT APPLICABLE	RIGID COLUMN	URBIS	AXIA 2 S1	PETITJEAN	SHEET STEEL	8	GALVANISED	THAMES
46102137	HAXEY LANE	Haxey Parish	477293.18	398906.5	24	7023	00202174	01/04/1999 00:00	6	2	LESS THAN 30MPH	BACK OF FOOTPATH	1000	SINGLE ARM	NOT APPLICABLE	RIGID COLUMN	URBIS	AXIA 2 S1	PETITJEAN	SHEET STEEL	8	GALVANISED	THAMES
46102137	HAXEY LANE	Haxey Parish	477286.84	398876.57	25	7024	00202175	01/04/1999 00:00	6	2	LESS THAN 30MPH	BACK OF FOOTPATH	1000	SINGLE ARM	NOT APPLICABLE	RIGID COLUMN	URBIS	AXIA 2 S1	PETITJEAN	SHEET STEEL	8	GALVANISED	THAMES
46102137	HAXEY LANE	Haxey Parish	477279.39	398847.54	26	7025	00202176	01/04/1998 00:00	6	2	LESS THAN 30MPH	BACK OF FOOTPATH	1000	SINGLE ARM	NOT APPLICABLE	RIGID COLUMN	URBIS	AXIA 2 S1	PETITJEAN	SHEET STEEL	8	GALVANISED	THAMES
46102137	HAXEY LANE	Haxey Parish	477430.65	399634.53	3	7002	00202153	01/04/1991 00:00	6	2	LESS THAN 30MPH	VERGE	1000	SINGLE ARM	NOT APPLICABLE	RIGID COLUMN	URBIS	AXIA 2 S1	PETIT

46102152	SLUICE ROAD	South Ferriby Parish	497660.08	421052.15	5	7004	00202288	01/04/1999 00:00	6	3	BETWEEN 30-50 MPH	BACK OF FOOTPATH	800	SINGLE ARM	NOT APPLICABLE	RIGID COLUMN	URBIS	AXIA 2 S1	PETITJEAN	SHEET STEEL	10	GALVANISED	THAMES
46102152	SLUICE ROAD	South Ferriby Parish	498864.81	421004.65	50	7049	00202333	01/04/1973 00:00	6	3	LESS THAN 30MPH	BACK OF FOOTPATH	1250	SINGLE ARM	MID GREY	RIGID COLUMN	URBIS	AXIA 2 S1	PETITJEAN	SHEET STEEL	10	PAINTED	THAMES
46102152	SLUICE ROAD	South Ferriby Parish	498875.54	421020.51	51	7050	00202334	01/04/1973 00:00	6	3	LESS THAN 30MPH	BACK OF FOOTPATH	1250	SINGLE ARM	MID GREY	RIGID COLUMN	URBIS	AXIA 2 S1	PETITJEAN	SHEET STEEL	10	PAINTED	THAMES
46102152	SLUICE ROAD	South Ferriby Parish	498892.63	421046.27	52	7051	00202335	01/04/1973 00:00	6	3	LESS THAN 30MPH	BACK OF FOOTPATH	1250	SINGLE ARM	MID GREY	RIGID COLUMN	URBIS	AXIA 2 S1	PETITJEAN	SHEET STEEL	10	PAINTED	THAMES
46102152	SLUICE ROAD	South Ferriby Parish	498904.68	421062.15	53	7052	00202336	01/04/1973 00:00	6	3	LESS THAN 30MPH	BACK OF FOOTPATH	1250	SINGLE ARM	MID GREY	RIGID COLUMN	URBIS	AXIA 2 S1	PETITJEAN	SHEET STEEL	10	PAINTED	THAMES
46102152	SLUICE ROAD	South Ferriby Parish	498920.93	421097.17	54FP	7053	00202337	01/04/1973 00:00	6	3	LESS THAN 30MPH	BACK OF FOOTPATH	1250	SINGLE ARM	MID GREY	RIGID COLUMN	URBIS	AXIA 2 S1	PETITJEAN	SHEET STEEL	10	PAINTED	THAMES
46102152	SLUICE ROAD	South Ferriby Parish	498932.41	421109.61	55	7054	00202338	01/04/1973 00:00	6	3	GREATER THAN 50MPH	BACK OF FOOTPATH	1000	SINGLE ARM	MID GREY	RIGID COLUMN	URBIS	AXIA 2 S1	PETITJEAN	SHEET STEEL	10	PAINTED	THAMES
46102152	SLUICE ROAD	South Ferriby Parish	498954.3	421135.84	56	7055	00202339	01/04/1973 00:00	6	3	GREATER THAN 50MPH	BACK OF FOOTPATH	1250	SINGLE ARM	MID GREY	RIGID COLUMN	URBIS	AXIA 2 S1	PETITJEAN	SHEET STEEL	10	PAINTED	THAMES
46102152	SLUICE ROAD	South Ferriby Parish	498972.1	421162.68	57	7056	00202340	01/04/1973 00:00	6	3	GREATER THAN 50MPH	BACK OF FOOTPATH	1250	SINGLE ARM	MID GREY	RIGID COLUMN	URBIS	AXIA 2 S1	PETITJEAN	SHEET STEEL	10	PAINTED	THAMES
46102152	SLUICE ROAD	South Ferriby Parish	498989.38	421188.77	58	7057	00202341	01/04/1973 00:00	6	3	GREATER THAN 50MPH	BACK OF FOOTPATH	1250	SINGLE ARM	MID GREY	RIGID COLUMN	URBIS	AXIA 2 S1	PETITJEAN	SHEET STEEL	10	PAINTED	THAMES
46102152	SLUICE ROAD	South Ferriby Parish	499013.42	421210.7	59	7058	00202342	01/04/1973 00:00	6	3	GREATER THAN 50MPH	BACK OF FOOTPATH	1250	SINGLE ARM	MID GREY	RIGID COLUMN	URBIS	AXIA 2 S1	PETITJEAN	SHEET STEEL	10	PAINTED	THAMES
46102152	SLUICE ROAD	South Ferriby Parish	497682.9	421049.89	6	7005	00202289	01/04/1999 00:00	6	3	BETWEEN 30-50 MPH	BACK OF FOOTPATH	800	SINGLE ARM	NOT APPLICABLE	RIGID COLUMN	URBIS	AXIA 2 S1	PETITJEAN	SHEET STEEL	10	GALVANISED	THAMES
46102152	SLUICE ROAD	South Ferriby Parish	499037.39	421224.56	60	7059	00202343	01/04/1973 00:00	6	3	GREATER THAN 50MPH	BACK OF FOOTPATH	1250	SINGLE ARM	MID GREY	RIGID COLUMN	URBIS	AXIA 2 S1	PETITJEAN	SHEET STEEL	10	PAINTED	THAMES
46102152	SLUICE ROAD	South Ferriby Parish	499062.25	421228.01	61	7060	00202344	01/04/1973 00:00	6	3	GREATER THAN 50MPH	BACK OF FOOTPATH	1250	SINGLE ARM	MID GREY	RIGID COLUMN	URBIS	AXIA 2 S1	PETITJEAN	SHEET STEEL	10	PAINTED	THAMES
46102152	SLUICE ROAD	South Ferriby Parish	499089.15	421225.15	62	7061	00202345	01/04/1973 00:00	6	3	GREATER THAN 50MPH	BACK OF FOOTPATH	1250	SINGLE ARM	NOT APPLICABLE	RIGID COLUMN	URBIS	AXIA 2 S1	PETITJEAN	SHEET STEEL	10	GALVANISED	THAMES
46102152	SLUICE ROAD	South Ferriby Parish	499117.02	421219.35	63	7062	00202346	20/12/2021 00:00	6	3	GREATER THAN 50MPH	VERGE	1000	SINGLE ARM	NOT APPLICABLE	RIGID COLUMN	URBIS	AXIA 2 S1	MALLATITE	TUBULAR STEEL	10	GALVANISED	TUBULAR
46102152	SLUICE ROAD	South Ferriby Parish	499145.68	421216.23	64	7063	00202347	01/04/1973 00:00	6	3	GREATER THAN 50MPH	BACK OF FOOTPATH	1250	SINGLE ARM	MID GREY	RIGID COLUMN	URBIS	AXIA 2 S1	PETITJEAN	SHEET STEEL	10	PAINTED	THAMES
46102152	SLUICE ROAD	South Ferriby Parish	499172.99	421215.41	65	7064	00202348	01/04/1973 00:00	6	3	GREATER THAN 50MPH	BACK OF FOOTPATH	1250	SINGLE ARM	MID GREY	RIGID COLUMN	URBIS	AXIA 2 S1	PETITJEAN	SHEET STEEL	10	PAINTED	THAMES
46102152	SLUICE ROAD	South Ferriby Parish	499202.73	421214.37	66	7065	00202349	16/04/2020 00:00	6	3	GREATER THAN 50MPH	VERGE	1000	SINGLE ARM	NOT APPLICABLE	RIGID COLUMN	URBIS	AXIA 2 S1	MALLATITE	TUBULAR STEEL	10	GALVANISED	TUBULAR
46102152	SLUICE ROAD	South Ferriby Parish	499235.09	421213.99	67	7066	00202350	01/04/1973 00:00	6	3	GREATER THAN 50MPH	VERGE	1250	SINGLE ARM	MID GREY	RIGID COLUMN	URBIS	AXIA 2 S1	PETITJEAN	SHEET STEEL	10	PAINTED	THAMES
46102152	SLUICE ROAD	South Ferriby Parish	499264.72	421208.91	68	7067	00202351	01/04/1973 00:00	6	3	GREATER THAN 50MPH	FRONT OF FOOTPATH	1250	SINGLE ARM	MID GREY	RIGID COLUMN	URBIS	AXIA 2 S1	PETITJEAN	SHEET STEEL	10	PAINTED	THAMES
46102152	SLUICE ROAD	South Ferriby Parish	499292.59	421192.02	69	7068	00202352	01/04/1973 00:00	6	3	GREATER THAN 50MPH	VERGE	1250	SINGLE ARM	MID GREY	RIGID COLUMN	URBIS	AXIA 2 S1	PETITJEAN	SHEET STEEL	10	PAINTED	THAMES
46102152	SLUICE ROAD	South Ferriby Parish	497711.41	421048.26	7	7006	00202290	01/04/1999 00:00	6	3	BETWEEN 30-50 MPH	BACK OF FOOTPATH	800	SINGLE ARM	NOT APPLICABLE	RIGID COLUMN	URBIS	AXIA 2 S1	PETITJEAN	SHEET STEEL	10	GALVANISED	THAMES
46102152	SLUICE ROAD	South Ferriby Parish	499323.35	421183.68	70	7069	00202353	01/04/1973 00:00	6	3	GREATER THAN 50MPH	VERGE	1250	SINGLE ARM	MID GREY	RIGID COLUMN	URBIS	AXIA 2 S1	PETITJEAN	SHEET STEEL	10	PAINTED	THAMES
46102152	SLUICE ROAD	South Ferriby Parish	499350	421177.72	71	7070	00202354	01/04/1973 00:00	6	3	GREATER THAN 50MPH	VERGE	1250	SINGLE ARM	MID GREY	RIGID COLUMN	URBIS	AXIA 2 S1	PETITJEAN	SHEET STEEL	10	PAINTED	THAMES
46102152	SLUICE ROAD	South Ferriby Parish	499379.15	421171.73	72	7071	00202355	01/04/1973 00:00	6	3	GREATER THAN 50MPH	VERGE	1250	SINGLE ARM	MID GREY	RIGID COLUMN	URBIS	AXIA 2 S1	PETITJEAN	SHEET STEEL	10	PAINTED	THAMES
46102152	SLUICE ROAD	South Ferriby Parish	499407.25	421165.34	73	7072	00202356	01/04/1973 00:00	6	3	GREATER THAN 50MPH	VERGE	1250	SINGLE ARM	MID GREY	RIGID COLUMN	URBIS	AXIA 2 S1	PETITJEAN	SHEET STEEL	10	PAINTED	THAMES
46102152	SLUICE ROAD	South Ferriby Parish	499437.33	421158.19	74	7073	00202357	01/04/1973 00:00	6	3	GREATER THAN 50MPH	VERGE	1250	SINGLE ARM	MID GREY	RIGID COLUMN	URBIS	AXIA 2 S1	PETITJEAN	SHEET STEEL	10	PAINTED	THAMES
46102152	SLUICE ROAD	South Ferriby Parish	499466.08	421151.56	75	7074	00202358	01/04/1973 00:00	6	3	GREATER THAN 50MPH	VERGE	1250	SINGLE ARM	MID GREY	RIGID COLUMN	URBIS	AXIA 2 S1	PETITJEAN	SHEET STEEL	10	PAINTED	THAMES
46102152	SLUICE ROAD	South Ferriby Parish	497736.42	421046.97	8	7007	00202291	01/04/1999 00:00	6	3	BETWEEN 30-50 MPH	BACK OF FOOTPATH	800	SINGLE ARM	NOT APPLICABLE	RIGID COLUMN	URBIS	AXIA 2 S1	PETITJEAN	SHEET STEEL	10	GALVANISED	THAMES
46102152	SLUICE ROAD	South Ferriby Parish	497765.36	421045.76	9	7008	00202292	01/04/1999 00:00	6	3	BETWEEN 30-50 MPH	BACK OF FOOTPATH	800	SINGLE ARM	NOT APPLICABLE	RIGID COLUMN	URBIS	AXIA 2 S1	PETITJEAN	SHEET STEEL	10	GALVANISED	THAMES
46102153	SPA HILL	Kirton in Lindsey Parish	493669.84	398737.81	1	7000	00202359	01/04/1973 00:00	1	3	LESS THAN 30MPH	VERGE	800	SINGLE ARM	LIGHT GREY	RIGID COLUMN	URBIS	AXIA 2 S1	PETITJEAN	SHEET STEEL	6	PAINTED	DAER
46102153	SPA HILL	Kirton in Lindsey Parish	493648.6	398767.62	2	7001	00202360	01/04/1973 00:00	1	3	LESS THAN 30MPH	BACK OF FOOTPATH	800	SINGLE ARM	LIGHT GREY	RIGID COLUMN	URBIS	AXIA 2 S1	PETITJEAN	SHEET STEEL	6	PAINTED	DAER
46102153	SPA HILL	Kirton in Lindsey Parish	493646.08	398801.85	3	7002	00202361	01/04/1973 00:00	1	3	LESS THAN 30MPH	VERGE	800	SINGLE ARM	LIGHT GREY	RIGID COLUMN	URBIS	AXIA 2 S1	PETITJEAN	SHEET STEEL	6	PAINTED	DAER
46102153	SPA HILL	Kirton in Lindsey Parish	493627.61	398827.94	4	7003	00202362	01/04/1973 00:00	1	3	LESS THAN 30MPH	BACK OF FOOTPATH	800	SINGLE ARM	LIGHT GREY	RIGID COLUMN	URBIS	AXIA 2 S1	PETITJEAN	SHEET STEEL	6	PAINTED	DAER
46102153	SPA HILL	Kirton in Lindsey Parish	493596.38	398848.16	5	7004	00202363	01/04/1973 00:00	1	3	LESS THAN 30MPH	VERGE	800	SINGLE ARM	LIGHT GREY	RIGID COLUMN	URBIS	AXIA 2 S1	PETITJEAN	SHEET STEEL	6	PAINTED	DAER
46102153	SPA HILL	Kirton in Lindsey Parish	493563.25	398870.17	6	7005	00202364	01/04/1973 00:00	1	3	LESS THAN 30MPH	VERGE	800	SINGLE ARM	LIGHT GREY	RIGID COLUMN	URBIS	AXIA 2 S1	PETITJEAN	SHEET STEEL	6	PAINTED	DAER
46102153	SPA HILL	Kirton in Lindsey Parish	493533.07	398888.8	7	7006	00202365	01/04/1973 00:00	1	3	LESS THAN 30MPH	VERGE	800	SINGLE ARM	LIGHT GREY	RIGID COLUMN	URBIS	AXIA 2 S1	PETITJEAN	SHEET STEEL	6	PAINTED	DAER
46102153	SPA HILL	Kirton in Lindsey Parish	493503.62	398907.83	8	7007	00202366	01/04/1973 00:00	1	3	LESS THAN 30MPH	VERGE	800	SINGLE ARM	LIGHT GREY	RIGID COLUMN	URBIS	AXIA 2 S1	PETITJEAN	SHEET STEEL	6	PAINTED	DAER
46102154	SPRUCE LANE	Ulceby Parish	510534.68	414762.93	1	7000	00202367	01/04/1980 00:00	3	1	LESS THAN 30MPH	BACK OF FOOTPATH	1500	SINGLE ARM	LIGHT GREY	RIGID COLUMN	URBIS	AXIA 2 S1	PETITJEAN	SHEET STEEL	10	PAINTED	THAMES
46102154	SPRUCE LANE	Ulceby Parish	510862.65	414803.25	10	7009	00202376	01/04/1980 00:00	3	1	LESS THAN 30MPH	VERGE	1500	SINGLE ARM	LIGHT GREY	RIGID COLUMN	URBIS	AXIA 2 S1	PETITJEAN	SHEET STEEL	10	PAINTED	THAMES
46102154	SPRUCE LANE	Ulceby Parish	510893.97	414816.95	11	7010	00202377	01/04/1980 00:00	3	1	LESS THAN 30MPH	FRONT OF FOOTPATH	1500	SINGLE ARM	LIGHT GREY	RIGID COLUMN	URBIS	AXIA 2 S1	PETITJEAN	SHEET STEEL	10	PAINTED	THAMES
46102154	SPRUCE LANE	Ulceby Parish	510911.91	414825.39	12	7011	00202378	01/04/1980 00:00	3	1	LESS THAN 30MPH	FRONT OF FOOTPATH	1500	SINGLE ARM	LIGHT GREY	RIGID COLUMN	URBIS	AXIA 2 S1	PETITJEAN	SHEET STEEL	10	PAINTED	THAMES
46102154	SPRUCE LANE	Ulceby Parish	510931.97	414835.95	13	7012	00202379	01/04/1980 00:00	3	1	LESS THAN 30MPH	BACK OF FOOTPATH	1500	SINGLE ARM	LIGHT GREY	RIGID COLUMN	URBIS	AXIA 2 S1	PETITJEAN	SHEET STEEL	10	PAINTED	THAMES
46102154	SPRUCE LANE	Ulceby Parish	510963.1	414840.2	14	7013	00202380	01/04/1980 00:00	3	1	LESS THAN 30MPH	BACK OF FOOTPATH	1500	SINGLE ARM	LIGHT GREY	RIGID COLUMN	URBIS	AXIA 2 S1	PETITJEAN	SHEET STEEL	10	PAINTED	THAMES
46102154	SPRUCE LANE	Ulceby Parish	510573.22	414767.88	2	7001	00202368	01/04/1980 00:00	3	1	LESS THAN 30MPH	BACK OF FOOTPATH	1500	SINGLE ARM	LIGHT GREY	RIGID COLUMN	URBIS	AXIA 2 S1	PETITJEAN	SHEET STEEL	10	PAINTED	THAMES
46102154	SPRUCE LANE	Ulceby Parish	510607.97	414772.07	3	7002	00202369	01/04/1980 00:00	3	1	LESS THAN 30MPH	VERGE	1500	SINGLE ARM	LIGHT GREY	RIGID COLUMN	URBIS	AXIA 2 S1	PETITJEAN	SHEET STEEL	10	PAINTED	THAMES
46102154	SPRUCE LANE	Ulceby Parish	510645.5	414777.2	4	7003	00202370	01/04/1980 00:00	3	1	LESS THAN 30MPH	VERGE	1500	SINGLE ARM	LIGHT GREY	RIGID COLUMN	URBIS	AXIA 2 S1	PETITJEAN	SHEET STEEL	10	PAINTED	THAMES
46102154	SPRUCE LANE	Ulceby Parish	510692.63	414779.29	5	7004	00202371	01/04/1980 00:00	3	1	LESS THAN 30MPH	VERGE	1500	SINGLE ARM	LIGHT GREY	RIGID COLUMN	URBIS	AXIA 2 S1	PETITJEAN	SHEET STEEL	10	PAINTED	THAMES
46102154	SPRUCE LANE	Ulceby Parish	510722.51	414784.09	6	7005	00202372	01/04/1980 00:00	3	1	LESS THAN 30MPH	VERGE	1500	SINGLE ARM	LIGHT GREY	RIGID COLUMN	URBIS	AXIA 2 S1	PETITJEAN	SHEET STEEL	10	PAINTED	THAMES
46102154	SPRUCE LANE	Ulceby Parish	510755.2	414789.6	7	7006	00202373	01/04/1980 00:00	3	1	LESS THAN 30MPH	VERGE	1500	SINGLE ARM	LIGHT GREY	RIGID COLUMN	URBIS	AXIA 2 S1	PETITJEAN	SHEET STEEL	10	PAINTED	THAMES
46102154	SPRUCE LANE	Ulceby Parish	510784.92	414792.93	8	7007	00202374	01/04/1980 00:00	3	1	LESS THAN 30MPH	VERGE	1500	SINGLE ARM	LIGHT GREY	RIGID COLUMN	URBIS	AXIA 2 S1	PETITJEAN	SHEET STEEL	10	PAINTED	THAMES
46102154	SPRUCE LANE	Ulceby Parish	510827.7	414799.1	9	7008	00202375	01/04/1980 00:00	3	1	LESS THAN 30MPH	VERGE	1500	SINGLE ARM	LIGHT GREY	RIGID COLUMN	URBIS	AXIA 2 S1	PETITJEAN	SHEET STEEL	10	PAINTED	THAMES
46102155	STONE LANE	Burringham Parish	483658.2	409415.89	1FP	7007	00202388	01/04/1997 00:00	2	1	LESS THAN 30MPH	VERGE	300	SINGLE ARM	MID GREY	RIGID COLUMN	URBIS	AXIA 2 S1	PETITJEAN	SHEET STEEL	5	PAINTED	NIDD
46102155	STONE LANE	Burringham Parish	483697.29	409398.43	2	7000	00202381	01/04/1985 00:00	2	1	LESS THAN 30MPH	BACK OF FOOTPATH	300	SINGLE ARM	MID GREY	RIGID COLUMN	URBIS	AXIA 2 S1	PETITJEAN	SHEET STEEL	5	PAINTED	NIDD
46102155	STONE LANE	Burringham Parish	483733.12	409387.15	3	7001	00202382	01/04/2010 00:00	2	1	LESS THAN 30MPH	BACK OF FOOTPATH	0	POST TOP	NOT APPLICABLE	RIGID COLUMN	URBIS	AXIA 2 S1	MALLATITE	TUBULAR STEEL	6	GALVANISED	TUBULAR
46102155	STONE LANE	Burringham Parish	483762.32	409377.81	4	7002	00202383	01/04/2010 00:00	2	1	LESS THAN 30MPH	BACK OF FOOTPATH	0	POST TOP	NOT APPLICABLE	RIGID COLUMN	URBIS	AXIA 2 S1	MALLATITE	TUBULAR STEEL	6	GALVANISED	TUBULAR
46102155	STONE LANE	Burringham Parish	483798.25	409356.76	5	7003	00202384	01/04/1980 00:00	2	1	LESS THAN 30MPH	BACK OF FOOTPATH	300	SINGLE ARM	NOT APPLICABLE	RIGID COLUMN	URBIS	AXIA 2 S1	MALLATITE	TUBULAR STEEL	5	GALVANISED	STEPPED TUBULAR
46102155	STONE LANE	Burringham Parish	483849.76	409353.93	6	7004	00202385	14/11/2018 00:00	2	1	LESS THAN 30MPH	ON POLE	300	SINGLE ARM	DARK GREY	POLE MOUNTED	URBIS	AXIA 2 S1	WOODEN PO	WOOD	5	PAINTED	PUDSEY DIAMOND
46102155	STONE LANE	Burringham Parish	483876.65	409347.48	7	7005	00202386	14/11/2018 00:00	2	1	LESS THAN 30MPH	ON POLE	300	SINGLE ARM	DARK GREY	POLE MOUNTED	URBIS	AXIA 2 S1	WOODEN PO	WOOD	5	PAINTED	PUDSEY DIAMOND
46102155	STONE LANE	Burringham Parish	483917.82	409336.62	8	7006	00202387	14/11/2018 00:00	2	1	LESS THAN 30MPH	ON POLE	300	SINGLE ARM	DARK GREY	POLE MOUNTED	URBIS	AXIA 2 S1	WOODEN PO	WOOD	5	PAINTED	PUDSEY DIAMOND
46102157	THORNTON STREET	Barrow upon Humber Parish	506992.03	420952.52	1	7000	00202389	01/04/1974 00:00	4	1	LESS THAN 30MPH	BACK OF FOOTPATH	1500	SINGLE ARM	LIGHT GREY	RIGID COLUMN	URBIS	AXIA 2 S1	PETITJEAN	SHEET STEEL	10	PAINTED	RIBBLE
46102157	THORNTON STREET	Barrow upon Humber Parish	507132.9	420751.79	10	7009	00202398	01/04/1974 00:00	4	1	LESS THAN 30MPH	BACK OF FOOTPATH	2000	SINGLE ARM	LIGHT GREY	RIGID COLUMN	URBIS	AXIA 2 S1	PETITJEAN	SHEET STEEL	10	PAINTED	RIBBLE
46102157	THORNTON STREET	Barrow upon Humber Parish	507131.78	420727.05	11	7010	00202399	01/04/1974 00:00	4	1	GREATER THAN 50MPH	VERGE	1500	SINGLE ARM	LIGHT GREY	RIGID COLUMN	URBIS	AXIA 2 S1	PETITJEAN	SHEET STEEL	10	PAINTED	RIBBLE
46102157	THORNTON STREET	Barrow upon Humber Parish	507175.65	420698.07	12	7011	00202400	01/04/1974 00:00	4	1	GREATER THAN 50MPH	BACK OF FOOTPATH	2000	SINGLE ARM	LIGHT GREY	RIGID COLUMN	URBIS	AXIA 2 S1	PETITJEAN	SHEET STEEL	8	PAINTED	RIBBLE
46102157	THORNTON STREET	Barrow upon Humber Parish	507199.77	420669.29	13	7012	00202401	01/04/1974 00:00	4	1	GREATER THAN 50MPH	BACK OF FOOTPATH	2000	SINGLE ARM	LIGHT GREY	RIGID COLUMN	URBIS	AXIA 2 S1	PETITJEAN	SHEET STEEL	8	PAINTED	RIBBLE
46102157	THORNTON STREET	Barrow upon Humber Parish	507217.31	420647.36	14	7013	00202402	01/04/1974 00:00	4	1	GREATER THAN 50MPH	BACK OF FOOTPATH	2000	SINGLE ARM	LIGHT GREY	RIGID COLUMN	URBIS	AXIA 2 S1	PETITJEAN	SHEET STEEL	8	PAINTED	RIBBLE
46102157	THORNTON STREET	Barrow upon Humber Parish	507232.83	420624.08	15	7014	00202403	01/04/1974 00:00	4	1	GREATER THAN 50MPH	BACK OF FOOTPATH	2000	SINGLE ARM	LIGHT GREY	RIGID COLUMN	URBIS	AXIA 2 S1	PETITJEAN	SHEET STEEL	8	PAINTED	RIBBLE
46102157	THORNTON STREET	Barrow upon Humber Parish	507250.21	420599.54	16	7015	00202404	01/04/1974 00:00	4	1	GREATER THAN 50MPH	BACK OF FOOTPATH	2000	SINGLE ARM	LIGHT GREY	RIGID COLUMN	URBIS	AXIA 2 S1	PETITJEAN	SHEET STEEL	8	PAINTED	RIBBLE
46102157	THORNTON STREET	Barrow upon Humber Parish	506991.82	420926.5	2	7001	00202390	01/04/1974 00:00	4	1	LESS THAN 30MPH	BACK OF FOOTPATH	1500	SINGLE ARM	LIGHT GREY	RIGID COLUMN	URBIS	AXIA 2 S1	PETITJEAN	SHEET STEEL	10	PAINTED	RIBBLE
46102157	THORNTON STREET	Barrow upon Humber Parish	507010.65	420897.88	3	7002	00202391	01/04/1974 00:00	4	1	LESS THAN 30MPH	BACK OF FOOTPATH	1500	SINGLE ARM	LIGHT GREY	RIGID COLUMN	URBIS	AXIA 2 S1	PETITJEAN	SHEET STEEL	10	PAINTED	RIBBLE
46102157	THORNTON STREET	Barrow upon Humber Parish	507034.91	420870.16	4	7003	00202392	01/04/1974 00:00	4	1	LESS THAN 30MPH	BACK OF FOOTPATH	1500	SINGLE ARM	LIGHT GREY	RIGID COLUMN	URBIS	AXIA 2 S1	PETITJEAN	SHEET STEEL	10	PAINTED	RIBBLE
46102157	THORNTON STREET	Barrow upon Humber Parish	507043.43	420834.66	5	7004	00202393	01/04/1974 00:00	4	1	LESS THAN 30MPH	BACK OF FOOTPATH	1500	SINGLE ARM	LIGHT GREY	RIGID COLUMN	URBIS	AXIA 2 S1	PETITJEAN	SHEET STEEL	10	PAINTED	RIBBLE
46102157	THORNTON STREET	Barrow upon Humber Parish	507059.28	420807.24	6	7005	00202394	01/04/1974 00:00	4	1	LESS THAN 30MPH	BACK OF FOOTPATH	1500	SINGLE ARM	LIGHT GREY	RIGID COLUMN	URBIS	AXIA 2 S1	PETITJEAN	SHEET STEEL	10	PAINTED	RIBBLE
46102157	THORNTON STREET	Barrow upon Humber Parish	507076.61	420785.5	7	7006	00202395	01/04/1974 00:00	4	1	LESS THAN 30MPH	BACK OF FOOTPATH	1500	SINGLE ARM	LIGHT GREY	RIGID COLUMN	URBIS	AXIA 2 S1	PETITJEAN	SHEET STEEL	10	PAINTED	RIBBLE
46102157	THORNTON STREET	Barrow upon Humber Parish	507087.88	420762.82	8	7007	00202396	07/12/2020 00:00	4	1	LESS THAN 30MPH	BACK OF FOOTPATH	1000	SINGLE ARM	NOT APPLICABLE	RIGID COLUMN	URBIS	AXIA 2 S1	MALLATITE	TUBULAR STEEL	10	GALVANISED	TUBULAR
46102157	THORNTON STREET	Barrow upon Humber Parish	507117.52	420741.05	9FP	7008	00202397	01/04/1984 00:00	4	1	LESS THAN 30MPH	VERGE	1500	SINGLE ARM	LIGHT GREY	RIGID COLUMN	URBIS	AXIA 2 S1	PETITJEAN	SHEET STEEL	10	PAINTED	THAMES
46102160	TOWN STREET	South Killingholme Parish	515306	416059	1	7053	00211925	01/04/2017 00:00	3	1	LESS THAN 30MPH	BACK OF FOOTPATH	0	POST TOP	NOT APPLICABLE	RIGID COLUMN	PHILIPS	MINI LUMA 6.8 KL	VALMONT ST	TUBULAR STEEL	6	GALVANISED	TUBULAR
46102160	TOWN STREET	South Killingholme Parish	515217	416128	1	7049	00211921	01/04/2017 00:00	3	1	LESS THAN 30MPH	VERGE	0	POST TOP	NOT APPLICABLE	RIGID COLUMN	PHILIPS	MINI LUMA 6.8 KL	VALMONT ST	TUBULAR STEEL	6	GALVANISED	TUBULAR
46102160	TOWN STREET	South Killingholme Parish	515011	416370.2	1	7009	00202414	01/04/1973 00:00	3	1	LESS THAN 30MPH	BACK OF FOOTPATH	1000	SINGLE ARM	LIGHT GREY	RIGID COLUMN	URBIS	AXIA 2 S1	PETITJEAN	SHEET STEEL	6	PAINTED	NIDD
46102160	TOWN STREET	South Killingholme Parish	515421.89	415899.01	10	7031	00202436	01/04/1980 00:00	3	1	LESS THAN 30MPH	VERGE	0	POST TOP	MID GREY	RIGID COLUMN	URBIS	AXIA 2 S1	FABRIKAT	TUBULAR STEEL	5	PAINTED	5M01A
46102160	TOWN STREET	South Killingholme Parish	515317	416247	10B	7067	00211967	01/04/2017 00:00	3	1	LESS THAN 30MPH	FRONT OF FOOTPATH	0	POST TOP	BLACK	NOT APPLICABLE	OT APPLICABL	AL9000	ABACUS	NOT APPLICABLE	09M	POLYESTER PC	Not Applicable
46102160	TOWN STREET	South Killingholme Parish	515389	416169	10X	7099	00211999	01/04/2017 00:00	3	1	LESS THAN 30MPH	STEPS	0	POST TOP	BLACK	NOT APPLICABLE	OT APPLICABL	AL9000	ABACUS	NOT APPLICABLE	09M	POLYESTER PC	Not Applicable
46102160	TOWN STREET	South Killingholme Parish	515415	416080	10Y	7115	00212015	01/04/2017 00:00	3	1	LESS THAN 30MPH	STEPS	0	POST TOP	BLACK	NOT APPLICABLE	OT APPLICABL	AL9000	ABACUS	NOT APPLICABLE	09M	POLYESTER PC	Not Applicable
46102160	TOWN STREET	South Killingholme Parish	515418	415870.17	11	7032	00202437	01/04/1980 00:00	3	1	LESS THAN 30MPH	VERGE	0	POST TOP	MID GREY	RIGID COLUMN	URBIS	AXIA 2 S1	FABRIKAT	TUBULAR STEEL	5	PAINTED	5M01A
46102160	TOWN STREET	South Killingholme Parish	515338	416246	11B	7068	00211968	01/04/2017 00:00	3	1	LESS THAN 30MPH	FRONT OF FOOTPATH	0	POST TOP	BLACK	NOT APPLICABLE	OT APPLICABL	AL9000	ABACUS	NOT APPLICABLE	09M	POLYESTER PC	Not Applicable
46102160	TOWN STREET	South Killingholme Parish	515388	416172	11X	7100	00212000	01/04/2017 00:00	3	1	LESS THAN 30MPH	STEPS	0	POST TOP	BLACK	NOT APPLICABLE	OT APPLICABL	AL9000	ABACUS	NOT APPLICABLE	09M	POLYESTER PC	Not Applicable
46102160	TOWN STREET	South Killingholme Parish	515414	416083	11Y	7116	00212016	01/04/2017 00:00	3	1	LESS THAN 30MPH	STEPS	0	POST TOP	BLACK	NOT APPLICABLE	OT APPLICABL	AL9000	ABACUS	NOT APPLICABLE	09M	POLYESTER PC	Not Applicable
46102160	TOWN STREET	South Killingholme Parish	515431.6	415839.94	12	7033	00202438	01/04/1980 00:00	3

46102173	HIGH STREET	Eastoft Parish	480648.34	416538.21	12	7010	00202541	01/04/1993 00:00	4	3	LESS THAN 30MPH	BACK OF FOOTPATH	300	SINGLE ARM	NOT APPLICABLE	RIGID COLUMN	URBIS	AXIA 2 S1	PETITJEAN	SHEET STEEL	6	GALVANISED	DAER
46102173	HIGH STREET	Eastoft Parish	480663.85	416572.04	13	7011	00202542	01/04/1993 00:00	4	3	LESS THAN 30MPH	BACK OF FOOTPATH	300	SINGLE ARM	NOT APPLICABLE	RIGID COLUMN	URBIS	AXIA 2 S1	PETITJEAN	SHEET STEEL	6	GALVANISED	DAER
46102173	HIGH STREET	Eastoft Parish	480486.2	416232.78	1FP	7012	00202543	01/04/1993 00:00	4	3	LESS THAN 30MPH	VERGE	300	SINGLE ARM	NOT APPLICABLE	RIGID COLUMN	URBIS	AXIA 2 S1	PETITJEAN	SHEET STEEL	6	GALVANISED	DAER
46102173	HIGH STREET	Eastoft Parish	480497.19	416254.33	2	7000	00202531	01/04/1993 00:00	4	3	LESS THAN 30MPH	VERGE	300	SINGLE ARM	NOT APPLICABLE	RIGID COLUMN	URBIS	AXIA 2 S1	PETITJEAN	SHEET STEEL	6	GALVANISED	DAER
46102173	HIGH STREET	Eastoft Parish	480523.03	416292.92	3	7001	00202532	01/04/1993 00:00	4	3	LESS THAN 30MPH	VERGE	300	SINGLE ARM	NOT APPLICABLE	RIGID COLUMN	URBIS	AXIA 2 S1	PETITJEAN	SHEET STEEL	6	GALVANISED	DAER
46102173	HIGH STREET	Eastoft Parish	480536.03	416311.1	4	7002	00202533	01/04/1993 00:00	4	3	LESS THAN 30MPH	VERGE	300	SINGLE ARM	NOT APPLICABLE	RIGID COLUMN	URBIS	AXIA 2 S1	PETITJEAN	SHEET STEEL	6	GALVANISED	DAER
46102173	HIGH STREET	Eastoft Parish	480558.28	416329	5	7003	00202534	01/04/1993 00:00	4	3	LESS THAN 30MPH	BACK OF FOOTPATH	300	SINGLE ARM	NOT APPLICABLE	RIGID COLUMN	URBIS	AXIA 2 S1	PETITJEAN	SHEET STEEL	6	GALVANISED	DAER
46102173	HIGH STREET	Eastoft Parish	480572.89	416356.08	6	7004	00202535	01/04/1993 00:00	4	3	LESS THAN 30MPH	BACK OF FOOTPATH	300	SINGLE ARM	NOT APPLICABLE	RIGID COLUMN	URBIS	AXIA 2 S1	PETITJEAN	SHEET STEEL	6	GALVANISED	DAER
46102173	HIGH STREET	Eastoft Parish	480581.95	416396.87	7	7005	00202536	01/04/1993 00:00	4	3	LESS THAN 30MPH	BACK OF FOOTPATH	300	SINGLE ARM	NOT APPLICABLE	RIGID COLUMN	URBIS	AXIA 2 S1	PETITJEAN	SHEET STEEL	6	GALVANISED	DAER
46102173	HIGH STREET	Eastoft Parish	480599.47	416421.99	8	7006	00202537	01/04/1993 00:00	4	3	LESS THAN 30MPH	BACK OF FOOTPATH	300	SINGLE ARM	NOT APPLICABLE	RIGID COLUMN	URBIS	AXIA 2 S1	PETITJEAN	SHEET STEEL	6	GALVANISED	DAER
46102173	HIGH STREET	Eastoft Parish	480612.94	416452.78	9	7007	00202538	01/04/1993 00:00	4	3	LESS THAN 30MPH	BACK OF FOOTPATH	300	SINGLE ARM	NOT APPLICABLE	RIGID COLUMN	URBIS	AXIA 2 S1	PETITJEAN	SHEET STEEL	6	GALVANISED	DAER
46102174	GREEN LANE	Barrow upon Humber Parish	507076.98	421071.44	1	7000	00202544	01/04/1973 00:00	4	1	LESS THAN 30MPH	BACK OF FOOTPATH	800	SINGLE ARM	LIGHT GREY	RIGID COLUMN	URBIS	AXIA 2 S1	PETITJEAN	SHEET STEEL	5	PAINTED	DAER
46102174	GREEN LANE	Barrow upon Humber Parish	507281.41	420949.38	10	7009	00202553	01/04/1973 00:00	4	1	LESS THAN 30MPH	VERGE	800	SINGLE ARM	MID GREY	RIGID COLUMN	URBIS	AXIA 2 S1	PETITJEAN	SHEET STEEL	5	PAINTED	DAER
46102174	GREEN LANE	Barrow upon Humber Parish	507097.61	421064.98	2	7001	00202545	01/04/1973 00:00	4	1	LESS THAN 30MPH	WALL	500	SINGLE ARM	NOT APPLICABLE	WALL MOUNTED	URBIS	AXIA 2 S1	WALL MOUN	NOT APPLICABLE	5	NOT APPLICABI	OTHER
46102174	GREEN LANE	Barrow upon Humber Parish	507131.59	421053.42	3	7002	00202546	29/06/2018 00:00	4	1	LESS THAN 30MPH	ON POLE	300	SINGLE ARM	NOT APPLICABLE	POLE MOUNTED	URBIS	AXIA 2 S1	WOODEN PO	WOOD	5	NOT APPLICABI	PUDSEY DIAMOND
46102174	GREEN LANE	Barrow upon Humber Parish	507165	421040.27	4	7003	00202547	18/06/2018 00:00	4	1	LESS THAN 30MPH	ON POLE	300	SINGLE ARM	NOT APPLICABLE	POLE MOUNTED	URBIS	AXIA 2 S1	WOODEN PO	WOOD	5	NOT APPLICABI	PUDSEY DIAMOND
46102174	GREEN LANE	Barrow upon Humber Parish	507193.43	421031.35	5	7004	00202548	18/06/2018 00:00	4	1	LESS THAN 30MPH	ON POLE	300	SINGLE ARM	NOT APPLICABLE	POLE MOUNTED	URBIS	AXIA 2 S1	WOODEN PO	WOOD	5	NOT APPLICABI	PUDSEY DIAMOND
46102174	GREEN LANE	Barrow upon Humber Parish	507224.95	421031.31	6	7005	00202549	01/04/1973 00:00	4	1	LESS THAN 30MPH	BACK OF FOOTPATH	800	SINGLE ARM	MID GREY	RIGID COLUMN	URBIS	AXIA 2 S1	PETITJEAN	SHEET STEEL	5	PAINTED	DAER
46102174	GREEN LANE	Barrow upon Humber Parish	507241.07	421017.67	7	7006	00202550	18/06/2018 00:00	4	1	LESS THAN 30MPH	ON POLE	300	SINGLE ARM	NOT APPLICABLE	POLE MOUNTED	URBIS	AXIA 2 S1	WOODEN PO	WOOD	5	NOT APPLICABI	PUDSEY DIAMOND
46102174	GREEN LANE	Barrow upon Humber Parish	507258.45	420980.55	8	7007	00202551	18/06/2018 00:00	4	1	LESS THAN 30MPH	ON POLE	300	SINGLE ARM	NOT APPLICABLE	POLE MOUNTED	URBIS	AXIA 2 S1	WOODEN PO	WOOD	5	NOT APPLICABI	PUDSEY DIAMOND
46102174	GREEN LANE	Barrow upon Humber Parish	507269.48	420940.93	9	7008	00202552	18/06/2018 00:00	4	1	LESS THAN 30MPH	ON POLE	300	SINGLE ARM	NOT APPLICABLE	POLE MOUNTED	URBIS	AXIA 2 S1	WOODEN PO	WOOD	5	NOT APPLICABI	PUDSEY DIAMOND
46102175	GREEN LANE	Broughton Parish	496592.88	408992.1	1	7000	00202554	01/04/1980 00:00	1	1	LESS THAN 30MPH	VERGE	0	POST TOP	NOT APPLICABLE	RIGID COLUMN	URBIS	AXIA 2 S1	PETITJEAN	SHEET STEEL	5	GALVANISED	NIDD
46102175	GREEN LANE	Broughton Parish	496614.92	408971.09	2	7001	00202555	01/04/1980 00:00	1	1	LESS THAN 30MPH	VERGE	0	POST TOP	NOT APPLICABLE	RIGID COLUMN	URBIS	AXIA 2 S1	PETITJEAN	SHEET STEEL	5	GALVANISED	NIDD
46102175	GREEN LANE	Broughton Parish	496631.5	408955.69	3	7002	00202556	01/04/1980 00:00	1	1	LESS THAN 30MPH	VERGE	0	POST TOP	NOT APPLICABLE	RIGID COLUMN	URBIS	AXIA 2 S1	PETITJEAN	SHEET STEEL	5	GALVANISED	NIDD
46102175	GREEN LANE	Broughton Parish	496654.13	408934.07	4	7003	00202557	01/04/1980 00:00	1	1	LESS THAN 30MPH	VERGE	0	POST TOP	NOT APPLICABLE	RIGID COLUMN	URBIS	AXIA 2 S1	PETITJEAN	SHEET STEEL	5	GALVANISED	NIDD
46102176	HUNTSMAN CLOSE	Goxhill Parish	509861.18	421263.97	1	7001	04200549	01/04/2018 00:00	4	4	LESS THAN 30MPH	BACK OF FOOTPATH	0	POST TOP	NOT APPLICABLE	RIGID COLUMN	PHILIPS	MINI LUMA 2 KL	MALLATITE	TUBULAR STEEL	6	GALVANISED	TUBULAR
46102176	HUNTSMAN CLOSE	Goxhill Parish	509862.69	421228.23	2	7002	04200550	01/04/2018 00:00	4	4	LESS THAN 30MPH	BACK OF FOOTPATH	0	POST TOP	NOT APPLICABLE	RIGID COLUMN	PHILIPS	MINI LUMA 2 KL	MALLATITE	TUBULAR STEEL	6	GALVANISED	TUBULAR
46102176	HUNTSMAN CLOSE	Goxhill Parish	509840.52	421209.96	3	7003	04200551	01/04/2018 00:00	4	4	LESS THAN 30MPH	BACK OF FOOTPATH	0	POST TOP	NOT APPLICABLE	RIGID COLUMN	PHILIPS	MINI LUMA 2 KL	MALLATITE	TUBULAR STEEL	6	GALVANISED	TUBULAR
46102176	HUNTSMAN CLOSE	Goxhill Parish	509864.14	421203.76	4	7004	04200552	01/04/2018 00:00	4	4	LESS THAN 30MPH	BACK OF FOOTPATH	0	POST TOP	NOT APPLICABLE	RIGID COLUMN	PHILIPS	MINI LUMA 2 KL	MALLATITE	TUBULAR STEEL	6	GALVANISED	TUBULAR
46102177	EPWORTH ROAD	Owston Ferry Parish	480896.18	400336.35	1	7000	00202558	01/04/1993 00:00	6	2	LESS THAN 30MPH	BACK OF FOOTPATH	800	SINGLE ARM	NOT APPLICABLE	RIGID COLUMN	URBIS	AXIA 2 S1	PETITJEAN	SHEET STEEL	6	GALVANISED	DAER
46102177	EPWORTH ROAD	Owston Ferry Parish	480901.82	400559.09	10	7009	00202567	01/04/1993 00:00	6	2	LESS THAN 30MPH	BACK OF FOOTPATH	800	SINGLE ARM	NOT APPLICABLE	RIGID COLUMN	URBIS	AXIA 2 S1	PETITJEAN	SHEET STEEL	6	GALVANISED	DAER
46102177	EPWORTH ROAD	Owston Ferry Parish	480900.82	400591.24	11	7010	00202568	01/04/1993 00:00	6	2	LESS THAN 30MPH	BACK OF FOOTPATH	800	SINGLE ARM	NOT APPLICABLE	RIGID COLUMN	URBIS	AXIA 2 S1	PETITJEAN	SHEET STEEL	6	GALVANISED	DAER
46102177	EPWORTH ROAD	Owston Ferry Parish	480899.54	400626.5	12	7011	00202569	01/04/1993 00:00	6	2	LESS THAN 30MPH	BACK OF FOOTPATH	800	SINGLE ARM	NOT APPLICABLE	RIGID COLUMN	URBIS	AXIA 2 S1	PETITJEAN	SHEET STEEL	6	GALVANISED	DAER
46102177	EPWORTH ROAD	Owston Ferry Parish	480898.89	400655.2	13	7012	00202570	01/04/1993 00:00	6	2	LESS THAN 30MPH	BACK OF FOOTPATH	800	SINGLE ARM	NOT APPLICABLE	RIGID COLUMN	URBIS	AXIA 2 S1	PETITJEAN	SHEET STEEL	6	GALVANISED	DAER
46102177	EPWORTH ROAD	Owston Ferry Parish	480898.18	400680.2	14	7013	00202571	01/04/1993 00:00	6	2	LESS THAN 30MPH	VERGE	800	SINGLE ARM	NOT APPLICABLE	RIGID COLUMN	URBIS	AXIA 2 S1	PETITJEAN	SHEET STEEL	6	GALVANISED	DAER
46102177	EPWORTH ROAD	Owston Ferry Parish	480897.38	400713.48	15	7014	00202572	01/04/1993 00:00	6	2	LESS THAN 30MPH	ON POLE	300	SINGLE ARM	NOT APPLICABLE	POLE MOUNTED	URBIS	AXIA 2 S1	WOODEN PO	WOOD	6	NOT APPLICABI	Not Applicable
46102177	EPWORTH ROAD	Owston Ferry Parish	480896.72	400754.85	16	7015	00202573	01/04/1993 00:00	6	2	GREATER THAN 50MPH	ON POLE	300	SINGLE ARM	NOT APPLICABLE	POLE MOUNTED	URBIS	AXIA 2 S1	WOODEN PO	WOOD	6	NOT APPLICABI	Not Applicable
46102177	EPWORTH ROAD	Owston Ferry Parish	480895.54	400789.04	17	7016	00202574	01/04/1993 00:00	6	2	GREATER THAN 50MPH	ON POLE	300	SINGLE ARM	NOT APPLICABLE	POLE MOUNTED	URBIS	AXIA 2 S1	WOODEN PO	WOOD	6	NOT APPLICABI	Not Applicable
46102177	EPWORTH ROAD	Owston Ferry Parish	480889.61	400843.46	18	7017	00202575	01/04/1993 00:00	6	2	GREATER THAN 50MPH	ON POLE	300	SINGLE ARM	NOT APPLICABLE	POLE MOUNTED	URBIS	AXIA 2 S1	WOODEN PO	WOOD	6	NOT APPLICABI	Not Applicable
46102177	EPWORTH ROAD	Owston Ferry Parish	480883.31	400875.66	19	7018	00202576	01/04/1993 00:00	6	2	GREATER THAN 50MPH	ON POLE	300	SINGLE ARM	NOT APPLICABLE	POLE MOUNTED	URBIS	AXIA 2 S1	WOODEN PO	WOOD	6	NOT APPLICABI	Not Applicable
46102177	EPWORTH ROAD	Owston Ferry Parish	480896.99	400357.32	2	7001	00202559	01/04/1993 00:00	6	2	LESS THAN 30MPH	BACK OF FOOTPATH	800	SINGLE ARM	NOT APPLICABLE	RIGID COLUMN	URBIS	AXIA 2 S1	PETITJEAN	SHEET STEEL	6	GALVANISED	DAER
46102177	EPWORTH ROAD	Owston Ferry Parish	480898.08	400384.14	3	7002	00202560	01/04/1993 00:00	6	2	LESS THAN 30MPH	BACK OF FOOTPATH	800	SINGLE ARM	NOT APPLICABLE	RIGID COLUMN	URBIS	AXIA 2 S1	PETITJEAN	SHEET STEEL	6	GALVANISED	DAER
46102177	EPWORTH ROAD	Owston Ferry Parish	480898.69	400402.97	4	7003	00202561	01/04/1993 00:00	6	2	LESS THAN 30MPH	BACK OF FOOTPATH	800	SINGLE ARM	NOT APPLICABLE	RIGID COLUMN	URBIS	AXIA 2 S1	PETITJEAN	SHEET STEEL	6	GALVANISED	DAER
46102177	EPWORTH ROAD	Owston Ferry Parish	480896.29	400435.65	5	7004	00202562	01/04/1993 00:00	6	2	LESS THAN 30MPH	BACK OF FOOTPATH	800	SINGLE ARM	NOT APPLICABLE	RIGID COLUMN	URBIS	AXIA 2 S1	PETITJEAN	SHEET STEEL	6	GALVANISED	DAER
46102177	EPWORTH ROAD	Owston Ferry Parish	480893.55	400465.19	6	7005	00202563	01/04/1993 00:00	6	2	LESS THAN 30MPH	BACK OF FOOTPATH	800	SINGLE ARM	NOT APPLICABLE	RIGID COLUMN	URBIS	AXIA 2 S1	PETITJEAN	SHEET STEEL	6	GALVANISED	DAER
46102177	EPWORTH ROAD	Owston Ferry Parish	480895.97	400482.12	7	7006	00202564	01/04/1993 00:00	6	2	LESS THAN 30MPH	BACK OF FOOTPATH	800	SINGLE ARM	NOT APPLICABLE	RIGID COLUMN	URBIS	AXIA 2 S1	PETITJEAN	SHEET STEEL	6	GALVANISED	DAER
46102177	EPWORTH ROAD	Owston Ferry Parish	480901.58	400512.49	8	7007	00202565	01/04/1993 00:00	6	2	LESS THAN 30MPH	BACK OF FOOTPATH	800	SINGLE ARM	NOT APPLICABLE	RIGID COLUMN	URBIS	AXIA 2 S1	PETITJEAN	SHEET STEEL	6	GALVANISED	DAER
46102177	EPWORTH ROAD	Owston Ferry Parish	480902.66	400536.41	9	7008	00202566	01/04/1993 00:00	6	2	LESS THAN 30MPH	BACK OF FOOTPATH	800	SINGLE ARM	NOT APPLICABLE	RIGID COLUMN	URBIS	AXIA 2 S1	PETITJEAN	SHEET STEEL	6	GALVANISED	DAER
46102178	BRIGG ROAD	Broughton Parish	496328.03	408708.63	1	7000	00202577	01/04/1977 00:00	1	1	LESS THAN 30MPH	ON POLE	500	SINGLE ARM	NOT APPLICABLE	POLE MOUNTED	URBIS	AXIA 2 S1	WOODEN PO	WOOD	5	NOT APPLICABI	Not Applicable
46102178	BRIGG ROAD	Broughton Parish	496717.55	408659.72	10	7009	00202586	01/04/1977 00:00	1	1	LESS THAN 30MPH	ON POLE	500	SINGLE ARM	NOT APPLICABLE	POLE MOUNTED	URBIS	AXIA 2 S1	WOODEN PO	WOOD	5	NOT APPLICABI	Not Applicable
46102178	BRIGG ROAD	Broughton Parish	496760.86	408659.94	11	7010	00202587	01/04/1977 00:00	1	1	LESS THAN 30MPH	ON POLE	500	SINGLE ARM	NOT APPLICABLE	POLE MOUNTED	URBIS	AXIA 2 S1	WOODEN PO	WOOD	5	NOT APPLICABI	Not Applicable
46102178	BRIGG ROAD	Broughton Parish	496347.13	408681.73	2	7001	00202578	01/04/1977 00:00	1	1	LESS THAN 30MPH	ON POLE	500	SINGLE ARM	NOT APPLICABLE	POLE MOUNTED	URBIS	AXIA 2 S1	WOODEN PO	WOOD	5	NOT APPLICABI	Not Applicable
46102178	BRIGG ROAD	Broughton Parish	496405.18	408668.07	3	7002	00202579	01/04/1977 00:00	1	1	LESS THAN 30MPH	ON POLE	500	SINGLE ARM	NOT APPLICABLE	POLE MOUNTED	URBIS	AXIA 2 S1	WOODEN PO	WOOD	5	NOT APPLICABI	Not Applicable
46102178	BRIGG ROAD	Broughton Parish	496440.3	408660.52	4	7003	00202580	01/04/1977 00:00	1	1	LESS THAN 30MPH	ON POLE	500	SINGLE ARM	NOT APPLICABLE	POLE MOUNTED	URBIS	AXIA 2 S1	WOODEN PO	WOOD	5	NOT APPLICABI	Not Applicable
46102178	BRIGG ROAD	Broughton Parish	496487.45	408671.02	5	7004	00202581	01/04/1977 00:00	1	1	LESS THAN 30MPH	ON POLE	500	SINGLE ARM	NOT APPLICABLE	POLE MOUNTED	URBIS	AXIA 2 S1	WOODEN PO	WOOD	5	NOT APPLICABI	Not Applicable
46102178	BRIGG ROAD	Broughton Parish	496538.52	408658.99	6	7005	00202582	01/04/1977 00:00	1	1	LESS THAN 30MPH	ON POLE	500	SINGLE ARM	NOT APPLICABLE	POLE MOUNTED	URBIS	AXIA 2 S1	WOODEN PO	WOOD	5	NOT APPLICABI	Not Applicable
46102178	BRIGG ROAD	Broughton Parish	496586.76	408658.79	7	7006	00202583	01/04/1977 00:00	1	1	LESS THAN 30MPH	ON POLE	500	SINGLE ARM	NOT APPLICABLE	POLE MOUNTED	URBIS	AXIA 2 S1	WOODEN PO	WOOD	5	NOT APPLICABI	Not Applicable
46102178	BRIGG ROAD	Broughton Parish	496632.02	408658.84	8	7007	00202584	01/04/1977 00:00	1	1	LESS THAN 30MPH	ON POLE	500	SINGLE ARM	NOT APPLICABLE	POLE MOUNTED	URBIS	AXIA 2 S1	WOODEN PO	WOOD	5	NOT APPLICABI	Not Applicable
46102178	BRIGG ROAD	Broughton Parish	496673.34	408659.04	9	7008	00202585	01/04/1977 00:00	1	1	LESS THAN 30MPH	ON POLE	500	SINGLE ARM	NOT APPLICABLE	POLE MOUNTED	URBIS	AXIA 2 S1	WOODEN PO	WOOD	5	NOT APPLICABI	Not Applicable
46102180	BARNETBY LANE	Elsham Parish	503457.23	412200.3	1	7000	00202588	01/04/1988 00:00	6	1	LESS THAN 30MPH	BACK OF FOOTPATH	500	SINGLE ARM	LIGHT GREY	RIGID COLUMN	URBIS	AXIA 2 S1	PETITJEAN	SHEET STEEL	6	PAINTED	DAER
46102180	BARNETBY LANE	Elsham Parish	503486.7	412182.04	2	7001	00202589	01/04/1988 00:00	6	1	LESS THAN 30MPH	ON POLE	300	SINGLE ARM	NOT APPLICABLE	POLE MOUNTED	URBIS	AXIA 2 S1	WOODEN PO	WOOD	5	NOT APPLICABI	Not Applicable
46102180	BARNETBY LANE	Elsham Parish	503509.59	412155.67	3	7002	00202590	01/04/1988 00:00	6	1	LESS THAN 30MPH	ON POLE	300	SINGLE ARM	NOT APPLICABLE	POLE MOUNTED	URBIS	AXIA 2 S1	WOODEN PO	WOOD	5	NOT APPLICABI	Not Applicable
46102180	BARNETBY LANE	Elsham Parish	503539.49	412124.7	4	7003	00202591	01/04/1988 00:00	6	1	LESS THAN 30MPH	ON POLE	300	SINGLE ARM	NOT APPLICABLE	POLE MOUNTED	URBIS	AXIA 2 S1	WOODEN PO	WOOD	5	NOT APPLICABI	Not Applicable
46102180	BARNETBY LANE	Elsham Parish	503562.04	412103.33	5	7004	00202592	01/04/1988 00:00	6	1	LESS THAN 30MPH	ON POLE	300	SINGLE ARM	NOT APPLICABLE	POLE MOUNTED	URBIS	AXIA 2 S1	WOODEN PO	WOOD	5	NOT APPLICABI	Not Applicable
46102182	BEECH AVENUE	Gunness Parish	484158.35	411487.91	1	7000	00202596	01/05/2019 00:00	2	2	LESS THAN 30MPH	VERGE	0	POST TOP	NOT APPLICABLE	RIGID COLUMN	URBIS	AXIA 2 S1	MALLATITE	TUBULAR STEEL	6	GALVANISED	TUBULAR
46102182	BEECH AVENUE	Gunness Parish	484189.87	411485.41	2	7001	00202597	01/05/2019 00:00	2	2	LESS THAN 30MPH	BACK OF FOOTPATH	0	POST TOP	NOT APPLICABLE	RIGID COLUMN	URBIS	AXIA 2 S1	MALLATITE	TUBULAR STEEL	6	GALVANISED	TUBULAR
46102182	BEECH AVENUE	Gunness Parish	484218.7	411495.69	3	7002	00202598	01/05/2019 00:00	2	2	LESS THAN 30MPH	BACK OF FOOTPATH	0	POST TOP	NOT APPLICABLE	RIGID COLUMN	URBIS	AXIA 2 S1	MALLATITE	TUBULAR STEEL	6	GALVANISED	TUBULAR
46102182	BEECH AVENUE	Gunness Parish	484248.31	411501.81	4	7003	00202599	01/04/1994 00:00	2	2	LESS THAN 30MPH	BACK OF FOOTPATH	0	POST TOP	NOT APPLICABLE	RIGID COLUMN	URBIS	AXIA 2 S1	MALLATITE	TUBULAR STEEL	5	GALVANISED	STEPPED TUBULAR
46102182	BEECH AVENUE	Gunness Parish	484245.09	411476.54	5	7004	00202600	01/04/1994 00:00	2	2	LESS THAN 30MPH	BACK OF FOOTPATH	0	POST TOP	NOT APPLICABLE	RIGID COLUMN	URBIS	AXIA 2 S1	MALLATITE	TUBULAR STEEL	5	GALVANISED	STEPPED TUBULAR
46102182	BEECH AVENUE	Gunness Parish	484279.76	411489.71	6	7005	00202601	01/04/1980 00:00	2	2	NOT ON A ROAD	BACK OF FOOTPATH	0	POST TOP	NOT APPLICABLE	RIGID COLUMN	URBIS	AXIA 2 S1	PETITJEAN	SHEET STEEL	5	GALVANISED	NIDD
46102187	EARLSGATE	Winterton Parish	492492.1	418508.4	1	7000	00202602	01/04/2012 00:00	1	1	LESS THAN 30MPH	BACK OF FOOTPATH	500	SINGLE ARM	NOT APPLICABLE	RIGID COLUMN	URBIS	AXIA 2 S1	VALMONT ST	SHEET STEEL	8	GALVANISED	THAMES
46102187	EARLSGATE	Winterton Parish	492241.4	418427	10	7012	00202614	01/04/2012 00:00	1	1	LESS THAN 30MPH	VERGE	500	SINGLE ARM	NOT APPLICABLE	RIGID COLUMN	URBIS	AXIA 2 S1	VALMONT ST	SHEET STEEL	8	GALVANISED	THAMES
46102187	EARLSGATE	Winterton Parish	492206.58	418419.43	11	7013	00202615	01/04/2012 00:00	1	1	LESS THAN 30MPH	VERGE	500	SINGLE ARM	NOT APPLICABLE	RIGID COLUMN	URBIS	AXIA 2 S1	VALMONT ST	SHEET STEEL	8	GALVANISED	THAMES
46102187	EARLSGATE	Winterton Parish	492182.3	418404.46	12	7014	00202616	01/04/2012 00:00	1	1	LESS THAN 30MPH	VERGE	500	SINGLE ARM	NOT APPLICABLE	RIGID COLUMN	URBIS	AXIA 2 S1	VALMONT ST	SHEET STEEL	8	GALVANISED	THAMES
46102187	EARLSGATE	Winterton Parish	492152.91	418408.44	13	7015	00202617	01/04/2012 00:00	1	1	LESS THAN 30MPH	VERGE	500	SINGLE ARM	NOT APPLICABLE	RIGID COLUMN	URBIS	AXIA 2 S1	VALMONT ST	SHEET STEEL	8	GALVANISED	THAMES
46102187	EARLSGATE	Winterton Parish	492124.91	418391.74	14FP	7024	00202626	01/04/2012 00:00	1	1	LESS THAN 30MPH	VERGE	500	SINGLE ARM	NOT APPLICABLE	RIGID COLUMN	URBIS	AXIA 2 S1	VALMONT ST	SHEET STEEL	8	GALVANISED	THAMES
46102187	EARLSGATE	Winterton Parish	492087.68	418395.38	15	7016	00202618	01/04/2012 00:00	1	1	LESS THAN 30MPH	VERGE	500	SINGLE ARM	NOT APPLICABLE	RIGID COLUMN	URBIS	AXIA 2 S1	VALMONT ST	SHEET STEEL	8	GALVANISED	THAMES
46102187	EARLSGATE	Winterton Parish	492055.14	418376.68	16	7017	00202619	01/04/2012 00:00	1	1	LESS THAN 30MPH	VERGE	500	SINGLE ARM	NOT APPLICABLE	RIGID COLUMN	URBIS	AXIA 2 S1	VALMONT ST	SHEET STEEL	8	GALVANISED	THAMES
46102187	EARLSGATE	Winterton Parish	492026.69	418382.39	17	7018	00202620	01/04/2012 00:00	1	1	LESS THAN 30MPH	VERGE	500	SINGLE ARM	NOT APPLICABLE	RIGID COLUMN	URBIS	AXIA 2 S1	VALMONT ST	SHEET STEEL	8	GALVANISED	THAMES
46102187	EARLSGATE	Winterton Parish	491995.51	418365.67	18	7019	00202621	01/04/2012 00:00	1	1	LESS THAN 30MPH	VERGE	500	SINGLE ARM	NOT APPLICABLE	RIGID COLUMN	URBIS	AXIA 2 S1	VALMONT ST	SHEET STEEL	8	GALVANISED	THAMES
46102187	EARLSGATE	Winterton Parish	491964.48	418370.3	19FP	7025	00202627	01/04/2012 00:00	1	1	LESS THAN 30MPH	VERGE	500	SINGLE ARM	NOT APPLICABLE	RIGID COLUMN	URBIS	AXIA 2 S1	VALMONT ST	SHEET STEEL	8	GALVANISED	THAMES
46102187	EARLSGATE	Winterton Parish	492469.2	418489.7	2	7001	00202603	01/04/2012 00:00	1	1	LESS THAN 30MPH	BACK OF FOOTPATH	500	SINGLE ARM	NOT APPLICABLE	RIGID COLUMN	URBIS	AXIA 2 S1	VALMONT ST	SHEET STEEL	8	GALVANISED	THAMES
46102187	EARLSGATE	Winterton Parish	491939.2	418364.2	20FP	7026	00202628	01/04/2012 00:00	1	1	LESS THAN 30MPH	VERGE	500	SINGLE ARM	NOT APPLICABLE	RIGID COLUMN	URBIS	AXIA 2 S1	VALMONT ST	SHEET STEEL	8	GALVANISED	THAMES
46102187	EARLSGATE	Winterton Parish	491912.7	418358	21	7020	00202622	01/04/2012 00:00	1	1	LESS THAN 30MPH	VERGE	500	SINGLE ARM	NOT APPLICABLE	RIGID COLUMN	URBIS	AXIA 2 S1	VALMONT ST	SHEET STEEL	8	GALVANISED	THAMES
46102187	EARLSGATE	Winterton Parish	491883.4	418342.9	22FP	7027	00202629	01/04/2012 00:00	1	1	LESS THAN 30MPH	VERGE	500	SINGLE ARM	NOT APPLICABLE	RIGID COLUMN	URBIS	AXIA 2 S1	VALMONT ST	SHEET STEEL	8	GALVANISED	THAMES
46102187	EARLSGATE	Winterton Parish	491855.8	418337.4	23	7021	00202623	01/04/2012 00:00	1	1	LESS THAN 30MPH	VERGE	500	SINGLE ARM	NOT APPLICABLE	RIGID COLUMN	URBIS	AXIA 2 S1	VALMONT ST	SHEET STEEL	8	GALVANISED	THAMES
46102187	EARLSGATE	Winterton Parish	491826.8	418331.1	24	7022	00202624	01/04/2012 00:00	1	1	LESS THAN 30MPH	VERGE	500	SINGLE ARM	NOT APPLICABLE	RIGID COLUMN	URBIS	AXIA 2 S1	VALMONT ST	SHEET STEEL	8	GALVANISED	THAMES
46102187	EARLSGATE	Winterton Parish	492437.66	418487.92	3	7003	00202605	01/04/2012 00:00	1	1	LESS THAN 30MPH	BACK OF FOOTPATH	500	SINGLE ARM	NOT APPLICABLE	RIGID COLUMN	URBIS	AXIA 2 S1	VALMONT ST	SHEET STEEL	8	GALVANISED	THAMES
46102187	EARLSGATE	Winterton Parish

46102206	CONNECT 2 CYCLEWAY	Scunthorpe	488015.2	408697	8	7007	00202766	01/04/2010 00:00	3	4	NOT ON A ROAD	VERGE	0	POST TOP	NOT APPLICABLE	RIGID COLUMN	WRTL	ELA SQUARE 18 LED 57C	SAPA	ALUMINIUM	5	ALUMINIUM	CONICAL
46102206	CONNECT 2 CYCLEWAY	Scunthorpe	488056.2	409385.9	8	7025	00202784	01/04/2010 00:00	3	4	NOT ON A ROAD	VERGE	0	POST TOP	NOT APPLICABLE	RIGID COLUMN	WRTL	ELA SQUARE 18 LED 57C	SAPA	ALUMINIUM	5	ALUMINIUM	CONICAL
46102206	CONNECT 2 CYCLEWAY	Scunthorpe	488024.8	408735.1	9	7008	00202767	01/04/2010 00:00	3	4	NOT ON A ROAD	VERGE	0	POST TOP	NOT APPLICABLE	RIGID COLUMN	WRTL	ELA SQUARE 18 LED 57C	SAPA	ALUMINIUM	5	ALUMINIUM	CONICAL
46102206	CONNECT 2 CYCLEWAY	Scunthorpe	488046.5	409414.3	9	7026	00202785	01/04/2010 00:00	3	4	NOT ON A ROAD	VERGE	0	POST TOP	NOT APPLICABLE	RIGID COLUMN	WRTL	ELA SQUARE 18 LED 57C	SAPA	ALUMINIUM	5	ALUMINIUM	CONICAL
46102207	FOOTPATH SOUTH OF WEST COMMON LANE	Scunthorpe	488063	409417.3	10	7000	00202787	01/04/2010 00:00	3	4	NOT ON A ROAD	VERGE	0	POST TOP	NOT APPLICABLE	RIGID COLUMN	WRTL	ELA SQUARE 18 LED 57C	SAPA	ALUMINIUM	5	ALUMINIUM	CONICAL
46102207	FOOTPATH SOUTH OF WEST COMMON LANE	Scunthorpe	488095.6	409418.2	11	7001	00202788	01/04/2010 00:00	3	4	NOT ON A ROAD	VERGE	0	POST TOP	NOT APPLICABLE	RIGID COLUMN	WRTL	ELA SQUARE 18 LED 57C	SAPA	ALUMINIUM	5	ALUMINIUM	CONICAL
46102207	FOOTPATH SOUTH OF WEST COMMON LANE	Scunthorpe	488127.5	409420.8	12	7002	00202789	01/04/2010 00:00	3	4	NOT ON A ROAD	VERGE	0	POST TOP	NOT APPLICABLE	RIGID COLUMN	WRTL	ELA SQUARE 18 LED 57C	SAPA	ALUMINIUM	5	ALUMINIUM	CONICAL
46102207	FOOTPATH SOUTH OF WEST COMMON LANE	Scunthorpe	488162.4	409421.9	13	7003	00202790	01/04/2010 00:00	3	4	NOT ON A ROAD	VERGE	0	POST TOP	NOT APPLICABLE	RIGID COLUMN	WRTL	ELA SQUARE 18 LED 57C	SAPA	ALUMINIUM	5	ALUMINIUM	CONICAL
46102207	FOOTPATH SOUTH OF WEST COMMON LANE	Scunthorpe	488192.2	409421.7	14	7004	00202791	01/04/2010 00:00	3	4	NOT ON A ROAD	VERGE	0	POST TOP	NOT APPLICABLE	RIGID COLUMN	WRTL	ELA SQUARE 18 LED 57C	SAPA	ALUMINIUM	5	ALUMINIUM	CONICAL
46102207	FOOTPATH SOUTH OF WEST COMMON LANE	Scunthorpe	488228.1	409421.9	15	7005	00202792	01/04/2010 00:00	3	4	NOT ON A ROAD	VERGE	0	POST TOP	NOT APPLICABLE	RIGID COLUMN	WRTL	ELA SQUARE 18 LED 57C	SAPA	ALUMINIUM	5	ALUMINIUM	CONICAL
46102208	FOOTPATH ADJACENT BLAKE AVENUE	Scunthorpe	488061.4	409052.5	19	7000	00202793	01/04/2010 00:00	3	4	NOT ON A ROAD	VERGE	0	POST TOP	NOT APPLICABLE	RIGID COLUMN	WRTL	ELA SQUARE 18 LED 57C	SAPA	ALUMINIUM	5	ALUMINIUM	CONICAL
46102208	FOOTPATH ADJACENT BLAKE AVENUE	Scunthorpe	488102.9	409058.9	20	7001	00202794	01/04/2010 00:00	3	4	NOT ON A ROAD	VERGE	0	POST TOP	NOT APPLICABLE	RIGID COLUMN	WRTL	ELA SQUARE 18 LED 57C	SAPA	ALUMINIUM	5	ALUMINIUM	CONICAL
46102208	FOOTPATH ADJACENT BLAKE AVENUE	Scunthorpe	488131.3	409055.6	21	7002	00202795	01/04/2010 00:00	3	4	NOT ON A ROAD	VERGE	0	POST TOP	NOT APPLICABLE	RIGID COLUMN	WRTL	ELA SQUARE 18 LED 57C	SAPA	ALUMINIUM	5	ALUMINIUM	CONICAL
46102208	FOOTPATH ADJACENT BLAKE AVENUE	Scunthorpe	488053.4	409067.2	22	7003	00202796	01/04/2010 00:00	3	4	NOT ON A ROAD	VERGE	0	POST TOP	NOT APPLICABLE	RIGID COLUMN	WRTL	ELA SQUARE 18 LED 57C	SAPA	ALUMINIUM	5	ALUMINIUM	CONICAL
46102208	FOOTPATH ADJACENT BLAKE AVENUE	Scunthorpe	488057.4	409103.5	23	7004	00202797	01/04/2010 00:00	3	4	NOT ON A ROAD	VERGE	0	POST TOP	NOT APPLICABLE	RIGID COLUMN	WRTL	STELA WIDE 52 LED	SAPA	ALUMINIUM	5	ALUMINIUM	CONICAL
46102209	EAST HALTON ROAD	South Killingholme Parish	514498	415895	1	7000	00212021	01/04/2017 00:00	3	1	BETWEEN 30-50 MPH	VERGE	0	POST TOP	NOT APPLICABLE	RIGID COLUMN	PHILIPS	LUMA 2A 7 KL	VALMONT ST	TUBULAR STEEL	8	GALVANISED	TUBULAR
46102209	EAST HALTON ROAD	South Killingholme Parish	514436	416104	10	7009	00212030	01/04/2017 00:00	3	1	BETWEEN 30-50 MPH	VERGE	0	POST TOP	NOT APPLICABLE	RIGID COLUMN	PHILIPS	LUMA 1A 6.8 KL	VALMONT ST	TUBULAR STEEL	8	GALVANISED	TUBULAR
46102209	EAST HALTON ROAD	South Killingholme Parish	514443	416124	11	7010	00212031	01/04/2017 00:00	3	1	BETWEEN 30-50 MPH	VERGE	0	POST TOP	NOT APPLICABLE	RIGID COLUMN	PHILIPS	LUMA 1A 6.8 KL	VALMONT ST	TUBULAR STEEL	8	GALVANISED	TUBULAR
46102209	EAST HALTON ROAD	South Killingholme Parish	514425	416145	12	7011	00212032	01/04/2017 00:00	3	1	BETWEEN 30-50 MPH	VERGE	0	POST TOP	NOT APPLICABLE	RIGID COLUMN	PHILIPS	LUMA 1A 6.8 KL	VALMONT ST	TUBULAR STEEL	8	GALVANISED	TUBULAR
46102209	EAST HALTON ROAD	South Killingholme Parish	514418	416168	13	7012	00212033	01/04/2017 00:00	3	1	BETWEEN 30-50 MPH	VERGE	0	POST TOP	NOT APPLICABLE	RIGID COLUMN	PHILIPS	LUMA 2A 7 KL	VALMONT ST	TUBULAR STEEL	8	GALVANISED	TUBULAR
46102209	EAST HALTON ROAD	South Killingholme Parish	514413	416196	14	7013	00212034	01/04/2017 00:00	3	1	BETWEEN 30-50 MPH	VERGE	0	POST TOP	NOT APPLICABLE	RIGID COLUMN	PHILIPS	LUMA 2A 7 KL	VALMONT ST	TUBULAR STEEL	8	GALVANISED	TUBULAR
46102209	EAST HALTON ROAD	South Killingholme Parish	514407	416225	15	7014	00212035	01/04/2017 00:00	3	1	BETWEEN 30-50 MPH	VERGE	0	POST TOP	NOT APPLICABLE	RIGID COLUMN	PHILIPS	LUMA 2A 7 KL	VALMONT ST	TUBULAR STEEL	8	GALVANISED	TUBULAR
46102209	EAST HALTON ROAD	South Killingholme Parish	514404	416253	16	7015	00212036	01/04/2017 00:00	3	1	BETWEEN 30-50 MPH	VERGE	0	POST TOP	NOT APPLICABLE	RIGID COLUMN	PHILIPS	LUMA 2A 7 KL	VALMONT ST	TUBULAR STEEL	8	GALVANISED	TUBULAR
46102209	EAST HALTON ROAD	South Killingholme Parish	514401	416280	17	7016	00212037	01/04/2017 00:00	3	1	BETWEEN 30-50 MPH	VERGE	0	POST TOP	NOT APPLICABLE	RIGID COLUMN	PHILIPS	LUMA 2A 7 KL	VALMONT ST	TUBULAR STEEL	8	GALVANISED	TUBULAR
46102209	EAST HALTON ROAD	South Killingholme Parish	514399	416308	18	7017	00212038	01/04/2017 00:00	3	1	BETWEEN 30-50 MPH	VERGE	0	POST TOP	NOT APPLICABLE	RIGID COLUMN	PHILIPS	LUMA 2A 7 KL	VALMONT ST	TUBULAR STEEL	8	GALVANISED	TUBULAR
46102209	EAST HALTON ROAD	South Killingholme Parish	514397	416337	19	7018	00212039	01/04/2017 00:00	3	1	BETWEEN 30-50 MPH	VERGE	0	POST TOP	NOT APPLICABLE	RIGID COLUMN	PHILIPS	LUMA 2A 7 KL	VALMONT ST	TUBULAR STEEL	8	GALVANISED	TUBULAR
46102209	EAST HALTON ROAD	South Killingholme Parish	514493	415923	2	7001	00212022	01/04/2017 00:00	3	1	BETWEEN 30-50 MPH	VERGE	0	POST TOP	NOT APPLICABLE	RIGID COLUMN	PHILIPS	LUMA 2A 7 KL	VALMONT ST	TUBULAR STEEL	8	GALVANISED	TUBULAR
46102209	EAST HALTON ROAD	South Killingholme Parish	514393	416365	20	7019	00212040	01/04/2017 00:00	3	1	BETWEEN 30-50 MPH	VERGE	0	POST TOP	NOT APPLICABLE	RIGID COLUMN	PHILIPS	LUMA 2A 7 KL	VALMONT ST	TUBULAR STEEL	8	GALVANISED	TUBULAR
46102209	EAST HALTON ROAD	South Killingholme Parish	514389	416393	21	7020	00212041	01/04/2017 00:00	3	1	BETWEEN 30-50 MPH	VERGE	0	POST TOP	NOT APPLICABLE	RIGID COLUMN	PHILIPS	LUMA 2A 7 KL	VALMONT ST	TUBULAR STEEL	8	GALVANISED	TUBULAR
46102209	EAST HALTON ROAD	South Killingholme Parish	514383	416420	22	7021	00212042	01/04/2017 00:00	3	1	BETWEEN 30-50 MPH	VERGE	0	POST TOP	NOT APPLICABLE	RIGID COLUMN	PHILIPS	LUMA 2A 7 KL	VALMONT ST	TUBULAR STEEL	8	GALVANISED	TUBULAR
46102209	EAST HALTON ROAD	South Killingholme Parish	514377	416448	23	7022	00212043	01/04/2017 00:00	3	1	BETWEEN 30-50 MPH	VERGE	0	POST TOP	NOT APPLICABLE	RIGID COLUMN	PHILIPS	LUMA 2A 7 KL	VALMONT ST	TUBULAR STEEL	8	GALVANISED	TUBULAR
46102209	EAST HALTON ROAD	South Killingholme Parish	514488	415951	3	7002	00212023	01/04/2017 00:00	3	1	BETWEEN 30-50 MPH	VERGE	0	POST TOP	NOT APPLICABLE	RIGID COLUMN	PHILIPS	LUMA 2A 7 KL	VALMONT ST	TUBULAR STEEL	8	GALVANISED	TUBULAR
46102209	EAST HALTON ROAD	South Killingholme Parish	514481	415977	4	7003	00212024	01/04/2017 00:00	3	1	BETWEEN 30-50 MPH	VERGE	0	POST TOP	NOT APPLICABLE	RIGID COLUMN	PHILIPS	LUMA 2A 7 KL	VALMONT ST	TUBULAR STEEL	8	GALVANISED	TUBULAR
46102209	EAST HALTON ROAD	South Killingholme Parish	514484	416003	5	7004	00212025	01/04/2017 00:00	3	1	BETWEEN 30-50 MPH	VERGE	0	POST TOP	NOT APPLICABLE	RIGID COLUMN	PHILIPS	LUMA 1A 6.8 KL	VALMONT ST	TUBULAR STEEL	8	GALVANISED	TUBULAR
46102209	EAST HALTON ROAD	South Killingholme Parish	514465	416022	6	7005	00212026	01/04/2017 00:00	3	1	BETWEEN 30-50 MPH	VERGE	0	POST TOP	NOT APPLICABLE	RIGID COLUMN	PHILIPS	LUMA 1A 6.8 KL	VALMONT ST	TUBULAR STEEL	8	GALVANISED	TUBULAR
46102209	EAST HALTON ROAD	South Killingholme Parish	514471	416046	7	7006	00212027	01/04/2017 00:00	3	1	BETWEEN 30-50 MPH	VERGE	0	POST TOP	NOT APPLICABLE	RIGID COLUMN	PHILIPS	LUMA 1A 6.8 KL	VALMONT ST	TUBULAR STEEL	8	GALVANISED	TUBULAR
46102209	EAST HALTON ROAD	South Killingholme Parish	514450	416063	8	7007	00212028	01/04/2017 00:00	3	1	BETWEEN 30-50 MPH	VERGE	0	POST TOP	NOT APPLICABLE	RIGID COLUMN	PHILIPS	LUMA 1A 6.8 KL	VALMONT ST	TUBULAR STEEL	8	GALVANISED	TUBULAR
46102209	EAST HALTON ROAD	South Killingholme Parish	514456	416089	9	7008	00212029	01/04/2017 00:00	3	1	BETWEEN 30-50 MPH	VERGE	0	POST TOP	NOT APPLICABLE	RIGID COLUMN	PHILIPS	LUMA 1A 6.8 KL	VALMONT ST	TUBULAR STEEL	8	GALVANISED	TUBULAR
46102215	DARCY CLOSE	Winterton Parish	492588	418633	1	7001	04200337	02/02/2016 00:00	1	1	LESS THAN 30MPH	FRONT OF FOOTPATH	0	POST TOP	NOT APPLICABLE	RIGID COLUMN	URBIS	AXIA 2 S1	MALLATITE	TUBULAR STEEL	5	GALVANISED	TUBULAR
46102215	DARCY CLOSE	Winterton Parish	492588	418598	2	7002	04200338	01/02/2016 00:00	1	1	LESS THAN 30MPH	BACK OF FOOTPATH	0	POST TOP	NOT APPLICABLE	RIGID COLUMN	URBIS	AXIA 2 S1	MALLATITE	TUBULAR STEEL	5	GALVANISED	TUBULAR
46102215	DARCY CLOSE	Winterton Parish	492586	418577	3	7003	04200339	02/02/2016 00:00	1	1	LESS THAN 30MPH	BACK OF FOOTPATH	0	POST TOP	NOT APPLICABLE	RIGID COLUMN	URBIS	AXIA 2 S1	MALLATITE	TUBULAR STEEL	5	GALVANISED	TUBULAR
46102220	LONGS GARDEN	Barton upon Humber Parish	503145	422150	1	7001	04200521	16/06/2020 00:00	5	2	LESS THAN 30MPH	BACK OF FOOTPATH	0	POST TOP	BLACK	RIGID COLUMN	METCRAFT	VICTORIA	MALLATITE	TUBULAR STEEL	5	PAINTED	TUBULAR
46102220	LONGS GARDEN	Barton upon Humber Parish	503112	422163	2	7002	04200522	16/06/2020 00:00	5	2	LESS THAN 30MPH	VERGE	0	POST TOP	BLACK	RIGID COLUMN	METCRAFT	VICTORIA	MALLATITE	TUBULAR STEEL	5	PAINTED	TUBULAR
46102220	LONGS GARDEN	Barton upon Humber Parish	503100	422155	3	7003	04200523	16/06/2020 00:00	5	2	LESS THAN 30MPH	VERGE	0	POST TOP	BLACK	RIGID COLUMN	METCRAFT	VICTORIA	MALLATITE	TUBULAR STEEL	5	PAINTED	TUBULAR
46102220	LONGS GARDEN	Barton upon Humber Parish	503101	422179	4	7004	04200524	16/06/2020 00:00	5	2	LESS THAN 30MPH	SPLITTER ISLAND	0	POST TOP	BLACK	RIGID COLUMN	METCRAFT	VICTORIA	MALLATITE	TUBULAR STEEL	5	PAINTED	TUBULAR
46102221	FOOTPATH BETWEEN CORNWALL ROAD AND STATI	Keadby with Althorpe Parish	483520.84	411066.94	1	7001	00186260	01/04/1980 00:00	4	3	LESS THAN 30MPH	BACK OF FOOTPATH	300	SINGLE ARM	NOT APPLICABLE	RIGID COLUMN	URBIS	AXIA 2 S1	PETITJEAN	SHEET STEEL	5	GALVANISED	DAER
46102221	FOOTPATH BETWEEN CORNWALL ROAD AND STATI	Keadby with Althorpe Parish	483552.27	411066.41	2	7002	00186261	01/04/1980 00:00	4	3	LESS THAN 30MPH	BACK OF FOOTPATH	300	SINGLE ARM	NOT APPLICABLE	RIGID COLUMN	URBIS	AXIA 2 S1	PETITJEAN	SHEET STEEL	5	GALVANISED	DAER
46102221	FOOTPATH BETWEEN CORNWALL ROAD AND STATI	Keadby with Althorpe Parish	483584.73	411066.2	3	7003	00186262	01/04/1980 00:00	4	3	LESS THAN 30MPH	BACK OF FOOTPATH	300	SINGLE ARM	NOT APPLICABLE	RIGID COLUMN	URBIS	AXIA 2 S1	PETITJEAN	SHEET STEEL	5	GALVANISED	DAER
46102222	FOOTPATH FROM COLLUM LANE TO LINCOLN GAR	Scunthorpe	489662.42	408823.3	10	7009	00198873	01/04/1993 00:00	2	4	NOT ON A ROAD	BACK OF FOOTPATH	300	SINGLE ARM	NOT APPLICABLE	RIGID COLUMN	URBIS	AXIA 2 S1	PETITJEAN	SHEET STEEL	5	GALVANISED	DAER
46102222	FOOTPATH FROM COLLUM LANE TO LINCOLN GAR	Scunthorpe	489694.93	408824.98	11	7010	00198874	01/04/1993 00:00	2	4	NOT ON A ROAD	BACK OF FOOTPATH	300	SINGLE ARM	NOT APPLICABLE	RIGID COLUMN	URBIS	AXIA 2 S1	PETITJEAN	SHEET STEEL	5	GALVANISED	DAER
46102222	FOOTPATH FROM COLLUM LANE TO LINCOLN GAR	Scunthorpe	489526.59	408992.73	1FP	7000	00198864	01/04/1993 00:00	2	4	NOT ON A ROAD	BACK OF FOOTPATH	300	SINGLE ARM	NOT APPLICABLE	RIGID COLUMN	URBIS	AXIA 2 S1	PETITJEAN	SHEET STEEL	5	GALVANISED	DAER
46102222	FOOTPATH FROM COLLUM LANE TO LINCOLN GAR	Scunthorpe	489537.23	408971.86	2	7001	00198865	01/04/1993 00:00	2	4	NOT ON A ROAD	VERGE	300	SINGLE ARM	NOT APPLICABLE	RIGID COLUMN	URBIS	AXIA 2 S1	PETITJEAN	SHEET STEEL	5	GALVANISED	DAER
46102222	FOOTPATH FROM COLLUM LANE TO LINCOLN GAR	Scunthorpe	489540.84	408940.87	3	7002	00198866	01/04/1993 00:00	2	4	NOT ON A ROAD	BACK OF FOOTPATH	300	SINGLE ARM	NOT APPLICABLE	RIGID COLUMN	URBIS	AXIA 2 S1	PETITJEAN	SHEET STEEL	5	GALVANISED	DAER
46102222	FOOTPATH FROM COLLUM LANE TO LINCOLN GAR	Scunthorpe	489546.62	408922.09	4	7003	00198867	01/04/1993 00:00	2	4	NOT ON A ROAD	BACK OF FOOTPATH	300	SINGLE ARM	NOT APPLICABLE	RIGID COLUMN	URBIS	AXIA 2 S1	PETITJEAN	SHEET STEEL	5	GALVANISED	DAER
46102222	FOOTPATH FROM COLLUM LANE TO LINCOLN GAR	Scunthorpe	489555.11	408893.02	5	7004	00198868	01/04/1993 00:00	2	4	NOT ON A ROAD	BACK OF FOOTPATH	300	SINGLE ARM	NOT APPLICABLE	RIGID COLUMN	URBIS	AXIA 2 S1	PETITJEAN	SHEET STEEL	5	GALVANISED	DAER
46102222	FOOTPATH FROM COLLUM LANE TO LINCOLN GAR	Scunthorpe	489564.39	408863.46	6	7005	00198869	01/04/1993 00:00	2	4	NOT ON A ROAD	BACK OF FOOTPATH	300	SINGLE ARM	NOT APPLICABLE	RIGID COLUMN	URBIS	AXIA 2 S1	PETITJEAN	SHEET STEEL	5	GALVANISED	DAER
46102222	FOOTPATH FROM COLLUM LANE TO LINCOLN GAR	Scunthorpe	489575.79	408827.71	7	7006	00198870	01/04/1993 00:00	2	4	NOT ON A ROAD	BACK OF FOOTPATH	300	SINGLE ARM	NOT APPLICABLE	RIGID COLUMN	URBIS	AXIA 2 S1	PETITJEAN	SHEET STEEL	5	GALVANISED	DAER
46102222	FOOTPATH FROM COLLUM LANE TO LINCOLN GAR	Scunthorpe	489605.51	408821.17	8	7007	00198871	01/04/1993 00:00	2	4	NOT ON A ROAD	BACK OF FOOTPATH	300	SINGLE ARM	NOT APPLICABLE	RIGID COLUMN	URBIS	AXIA 2 S1	PETITJEAN	SHEET STEEL	5	GALVANISED	DAER
46102222	FOOTPATH FROM COLLUM LANE TO LINCOLN GAR	Scunthorpe	489631.88	408821.86	9	7008	00198872	01/04/1993 00:00	2	4	NOT ON A ROAD	BACK OF FOOTPATH	300	SINGLE ARM	NOT APPLICABLE	RIGID COLUMN	URBIS	AXIA 2 S1	PETITJEAN	SHEET STEEL	5	GALVANISED	DAER
46102223	FOOTPATH BETWEEN HURDS FARM AND MAIN STR	Worlaby Parish	501516.27	413805.41	1	7000	00206984	01/04/2001 00:00	6	3	NOT ON A ROAD	BACK OF FOOTPATH	0	POST TOP	NOT APPLICABLE	MID HINGED	URBIS	AXIA 2 S1	PETITJEAN	SHEET STEEL	5	GALVANISED	LEVEN
46102223	FOOTPATH BETWEEN HURDS FARM AND MAIN STR	Worlaby Parish	501485.81	413831.9	2	7001	00206985	01/04/2001 00:00	6	3	NOT ON A ROAD	BACK OF FOOTPATH	0	POST TOP	NOT APPLICABLE	MID HINGED	URBIS	AXIA 2 S1	PETITJEAN	SHEET STEEL	5	GALVANISED	LEVEN
46102224	FOOTPATH BETWEEN HURDS FARM AND TOP ROAD	Worlaby Parish	501558.14	413800.36	1	7000	00206986	01/04/2001 00:00	6	3	NOT ON A ROAD	BACK OF FOOTPATH	0	POST TOP	NOT APPLICABLE	MID HINGED	URBIS	AXIA 2 S1	PETITJEAN	SHEET STEEL	5	GALVANISED	LEVEN
46102224	FOOTPATH BETWEEN HURDS FARM AND TOP ROAD	Worlaby Parish	501578.83	413829.02	2	7001	00206987	01/04/2001 00:00	6	3	NOT ON A ROAD	BACK OF FOOTPATH	0	POST TOP	NOT APPLICABLE	MID HINGED	URBIS	AXIA 2 S1	PETITJEAN	SHEET STEEL	5	GALVANISED	LEVEN
46102225	FOOTPATHS WITHIN CENTRAL PARK	Scunthorpe	488887.61	409987.09	1	7000	00187489	01/04/1995 00:00	6	3	NOT ON A ROAD	BACK OF FOOTPATH	0	POST TOP	NOT APPLICABLE	RIGID COLUMN	URBIS	AXIA 2 S1	PETITJEAN	SHEET STEEL	5	GALVANISED	NIDD
46102225	FOOTPATHS WITHIN CENTRAL PARK	Scunthorpe	489166.14	410127.43	10	7009	00187480	01/04/1995 00:00	6	3	NOT ON A ROAD	BACK OF FOOTPATH	0	POST TOP	NOT APPLICABLE	RIGID COLUMN	URBIS	AXIA 2 S1	PETITJEAN	SHEET STEEL	5	GALVANISED	NIDD
46102225	FOOTPATHS WITHIN CENTRAL PARK	Scunthorpe	488919.25	410000.8	2	7001	00187488	01/04/1995 00:00	6	3	NOT ON A ROAD	BACK OF FOOTPATH	0	POST TOP	NOT APPLICABLE	RIGID COLUMN	URBIS	AXIA 2 S1	PETITJEAN	SHEET STEEL	5	GALVANISED	NIDD
46102225	FOOTPATHS WITHIN CENTRAL PARK	Scunthorpe	488964.93	410015.25	3	7002	00187487	01/04/1995 00:00	6	3	NOT ON A ROAD	BACK OF FOOTPATH	0	POST TOP	NOT APPLICABLE	RIGID COLUMN	URBIS	AXIA 2 S1	PETITJEAN	SHEET STEEL	5	GALVANISED	NIDD
46102225	FOOTPATHS WITHIN CENTRAL PARK	Scunthorpe	488999.15	410026.39	4	7003	00187486	01/04/1995 00:00	6	3	NOT ON A ROAD	BACK OF FOOTPATH	0	POST TOP	NOT APPLICABLE	RIGID COLUMN	URBIS	AXIA 2 S1	PETITJEAN	SHEET STEEL	5	GALVANISED	NIDD
46102225	FOOTPATHS WITHIN CENTRAL PARK	Scunthorpe	489028.74	410038.77	5	7004	00187485	01/04/1995 00:00	6	3	NOT ON A ROAD	BACK OF FOOTPATH	0	POST TOP	NOT APPLICABLE	RIGID COLUMN	URBIS	AXIA 2 S1	PETITJEAN	SHEET STEEL	5	GALVANISED	NIDD
46102225	FOOTPATHS WITHIN CENTRAL PARK	Scunthorpe	489060.8	410056.18	6	7005	00187484	01/04/1995 00:00	6	3	NOT ON A ROAD	BACK OF FOOTPATH	0	POST TOP	NOT APPLICABLE	RIGID COLUMN	URBIS	AXIA 2 S1	PETITJEAN	SHEET STEEL	5	GALVANISED	NIDD
46102225	FOOTPATHS WITHIN CENTRAL PARK	Scunthorpe	489089.29	410074.61	7	7006	00187483	01/04/1995 00:00	6	3	NOT ON A ROAD	BACK OF FOOTPATH	0	POST TOP	NOT APPLICABLE	RIGID COLUMN	URBIS	AXIA 2 S1	PETITJEAN	SHEET STEEL	5	GALVANISED	NIDD
46102225	FOOTPATHS WITHIN CENTRAL PARK	Scunthorpe	489117.36	410098	8	7007	00187482	01/04/1995 00:00	6	3	NOT ON A ROAD	BACK OF FOOTPATH	0	POST TOP	NOT APPLICABLE	RIGID COLUMN	URBIS	AXIA 2 S1	PETITJEAN	SHEET STEEL	5	GALVANISED	NIDD
46102225	FOOTPATHS WITHIN CENTRAL PARK	Scunthorpe	489143.37	410116.2	9	7008	00187481	01/04/1995 00:00	6	3	NOT ON A ROAD	BACK OF FOOTPATH	0	POST TOP	NOT APPLICABLE	RIGID COLUMN	URBIS	AXIA 2 S1	PETITJEAN	SHEET STEEL	5	GALVANISED	NIDD
46102226	A15 LINK BETWEEN A18 AND M180	Broughton Parish	495687.12	406630.84	1	7000	00202798	01/04/1978 00:00	1	1	GREATER THAN 50MPH	CENTRAL RESERVATION	1500	SINGLE ARM	DARK GREY	RIGID COLUMN	URBIS	AXIA 2 S1	PETITJEAN	SHEET STEEL	10	PAINTED	THAMES
46102226	A15 LINK BETWEEN A18 AND M180	Broughton Parish	495641.72	406383.77	10	7009	00202807	01/04/1990 00:00	1	1	GREATER THAN 50MPH	VERGE	1250	SINGLE ARM	DARK GREY	RIGID COLUMN	URBIS	AXIA 2 S1	PETITJEAN	SHEET STEEL	10	PAINTED	THAMES
46102226	A15 LINK BETWEEN A18 AND M180	Broughton Parish	495684.37	406364.95	11	7010	00202808	01/04/1994 00:00	1	1	GREATER THAN 50MPH	VERGE	1250	SINGLE ARM	DARK GREY	RIGID COLUMN	URBIS	AXIA 2 S1	PETITJEAN	SHEET STEEL	10	PAINTED	THAMES
46102226	A15 LINK BETWEEN A18 AND M180	Broughton Parish	495626.81	406365.48	12	7011	00202809	01/04/1990 00:00	1	1	GREATER THAN 50MPH	VERGE	1250	SINGLE ARM	DARK GREY	RIGID COLUMN	URBIS	AXIA 2 S1	PETITJEAN	SHEET STEEL	10	PAINTED	THAMES
46102226	A15 LINK BETWEEN A18 AND M180	Broughton Parish	495678.96	406627.01	2	7001	00202799	01/04/1978 00:00	1	1	GREATER THAN 50MPH	CENTRAL RESERVATION	1500	SINGLE ARM	DARK GREY	RIGID COLUMN	URBIS	AXIA 2 S1	PETITJEAN	SHEET STEEL	10	PAINTED	THAMES
46102226	A15 LINK BETWEEN A18 AND M180	Broughton Parish	495678.66	406591.93	3	7002	00202800	01/04/1978 00:00	1	1	GREATER THAN 50MPH	CENTRAL RESERVATION	1250	DOUBLE ARM	DARK GREY	RIGID COLUMN	URBIS	AXIA 2 S1	PETITJEAN	SHEET STEEL	10	PAINTED	THAMES
46102226	A15 LINK BETWEEN A18 AND M180	Broughton Parish	495675.8	406554.35	4	7003	00202801	01/04/1978 00:00	1	1	GREATER THAN 50MPH	CENTRAL RESERVATION	1250	DOUBLE ARM	DARK GREY	RIGID COLUMN	URBIS	AXIA 2 S1	PETITJEAN	SHEET STEEL	10	PAINTED	THAMES
46102226	A15 LINK BETWEEN A18 AND M180	Broughton Parish	495672.1	406516.59	5	7004	00202802	01/04/1990 00:00	1	1	GREATER THAN 50MPH	CENTRAL RESERVATION	800	DOUBLE ARM	NOT APPLICABLE	RIGID COLUMN	URBIS	AXIA 2 S1	PETITJEAN	SHEET STEEL	10	GALVANISED	THAMES
46102226	A15 LINK BETWEEN A18 AND M180	Broughton Parish	495668.84	406479.16	6	7005	00202803	01/04/1990 00:00	1	1	GREATER THAN 50MPH	CENTRAL RESERVATION	800	DOUBLE ARM	NOT APPLICABLE	RIGID COLUMN	URBIS	AXIA 2 S1	PETITJEAN	SHEET STEEL	10	GALVANISED	THAMES
46102226	A15 LINK BETWEEN A18 AND M180	Broughton Parish	495665.45	406445.4	7	7006	00202804	01/04/1990 00:00	1	1	GREATER THAN 50MPH	CENTRAL RESERVATION	1250	DOUBLE ARM	NOT APPLICABLE	RIGID COLUMN	URBIS	AXIA 2 S1	PETITJEAN	SHEET STEEL	10	GALVANISED	THAMES
46102226	A15 LINK BETWEEN A18 AND M180	Broughton Parish	495661.44	406409.78	8	7007	00202805	01/04/1990 00:00	1	1	GREATER THAN 50MPH	CENTRAL RESERVATION	1250	DOUB

46102254	A15 FROM HUMBER BRIDGE TO A1077	Barton upon Humber Parish	502057.41	422174.72	18NE	7047	00202924	01/04/1979 00:00	5	2	GREATER THAN 50MPH	VERGE	1250	SINGLE ARM	MID GREY	RIGID COLUMN	URBIS	AXIA 2 S1	CU	SHEET STEEL	10	PAINTED	MOTORWAY
46102254	A15 FROM HUMBER BRIDGE TO A1077	Barton upon Humber Parish	501988.78	422157.59	18NW	7081	00202958	01/04/1979 00:00	5	2	GREATER THAN 50MPH	VERGE	1250	SINGLE ARM	MID GREY	RIGID COLUMN	URBIS	AXIA 2 S1	CU	SHEET STEEL	10	PAINTED	MOTORWAY
46102254	A15 FROM HUMBER BRIDGE TO A1077	Barton upon Humber Parish	502001.26	422101.15	19M	7018	00202895	01/04/2022 00:00	5	2	GREATER THAN 50MPH	BACK OF FOOTPATH	1000	DOUBLE ARM	NOT APPLICABLE	RIGID COLUMN	PHILIPS	LUMA 1 80 LED	MALLATITE	TUBULAR STEEL	10	GALVANISED	TUBULAR
46102254	A15 FROM HUMBER BRIDGE TO A1077	Barton upon Humber Parish	502050.58	422148.3	19NE	7048	00202925	01/04/1979 00:00	5	2	GREATER THAN 50MPH	VERGE	1250	SINGLE ARM	MID GREY	RIGID COLUMN	URBIS	AXIA 2 S1	CU	SHEET STEEL	10	PAINTED	MOTORWAY
46102254	A15 FROM HUMBER BRIDGE TO A1077	Barton upon Humber Parish	501996.88	422182.8	19NW	7082	00202959	01/04/1979 00:00	5	2	GREATER THAN 50MPH	VERGE	1250	SINGLE ARM	MID GREY	RIGID COLUMN	URBIS	AXIA 2 S1	CU	SHEET STEEL	10	PAINTED	MOTORWAY
46102254	A15 FROM HUMBER BRIDGE TO A1077	Barton upon Humber Parish	502307.6	422645.72	1M	7000	00202877	01/04/2022 00:00	5	2	GREATER THAN 50MPH	BACK OF FOOTPATH	1000	DOUBLE ARM	NOT APPLICABLE	RIGID COLUMN	PHILIPS	LUMA 1 80 LED	MALLATITE	TUBULAR STEEL	10	GALVANISED	TUBULAR
46102254	A15 FROM HUMBER BRIDGE TO A1077	Barton upon Humber Parish	502299.18	422613.97	1NE	7030	00202907	01/04/1979 00:00	5	2	GREATER THAN 50MPH	VERGE	1250	SINGLE ARM	MID GREY	RIGID COLUMN	URBIS	AXIA 2 S1	CU	SHEET STEEL	10	PAINTED	MOTORWAY
46102254	A15 FROM HUMBER BRIDGE TO A1077	Barton upon Humber Parish	501897.65	421657.25	1NW	7064	00202941	01/04/1979 00:00	5	2	GREATER THAN 50MPH	VERGE	1250	SINGLE ARM	MID GREY	RIGID COLUMN	URBIS	AXIA 2 S1	CU	SHEET STEEL	10	PAINTED	MOTORWAY
46102254	A15 FROM HUMBER BRIDGE TO A1077	Barton upon Humber Parish	501995.3	422066.59	20M	7019	00202896	01/04/2022 00:00	5	2	GREATER THAN 50MPH	BACK OF FOOTPATH	1000	DOUBLE ARM	NOT APPLICABLE	RIGID COLUMN	PHILIPS	LUMA 1 80 LED	MALLATITE	TUBULAR STEEL	10	GALVANISED	TUBULAR
46102254	A15 FROM HUMBER BRIDGE TO A1077	Barton upon Humber Parish	502043	422115.19	20NE	7049	00202926	01/04/1985 00:00	5	2	GREATER THAN 50MPH	VERGE	1000	SINGLE ARM	NOT APPLICABLE	RIGID COLUMN	URBIS	AXIA 2 S1	PETITJEAN	SHEET STEEL	10	GALVANISED	THAMES
46102254	A15 FROM HUMBER BRIDGE TO A1077	Barton upon Humber Parish	502008.84	422212.32	20NW	7083	00202960	01/04/1979 00:00	5	2	GREATER THAN 50MPH	VERGE	1250	SINGLE ARM	MID GREY	RIGID COLUMN	URBIS	AXIA 2 S1	CU	SHEET STEEL	10	PAINTED	MOTORWAY
46102254	A15 FROM HUMBER BRIDGE TO A1077	Barton upon Humber Parish	501989.99	422033.56	21M	7020	00202897	01/04/2022 00:00	5	2	GREATER THAN 50MPH	BACK OF FOOTPATH	1000	DOUBLE ARM	NOT APPLICABLE	RIGID COLUMN	PHILIPS	LUMA 1 80 LED	MALLATITE	TUBULAR STEEL	10	GALVANISED	TUBULAR
46102254	A15 FROM HUMBER BRIDGE TO A1077	Barton upon Humber Parish	502037.01	422085.61	21NE	7050	00202927	01/04/1979 00:00	5	2	GREATER THAN 50MPH	VERGE	1250	SINGLE ARM	MID GREY	RIGID COLUMN	URBIS	AXIA 2 S1	CU	SHEET STEEL	10	PAINTED	MOTORWAY
46102254	A15 FROM HUMBER BRIDGE TO A1077	Barton upon Humber Parish	502021.27	422242.74	21NW	7084	00202961	01/04/1979 00:00	5	2	GREATER THAN 50MPH	VERGE	1250	SINGLE ARM	MID GREY	RIGID COLUMN	URBIS	AXIA 2 S1	CU	SHEET STEEL	10	PAINTED	MOTORWAY
46102254	A15 FROM HUMBER BRIDGE TO A1077	Barton upon Humber Parish	501986.4	421997.26	22M	7021	00202898	01/04/2022 00:00	5	2	GREATER THAN 50MPH	BACK OF FOOTPATH	1000	DOUBLE ARM	NOT APPLICABLE	RIGID COLUMN	PHILIPS	LUMA 1 80 LED	MALLATITE	TUBULAR STEEL	10	GALVANISED	TUBULAR
46102254	A15 FROM HUMBER BRIDGE TO A1077	Barton upon Humber Parish	502033.79	422058.03	22NE	7051	00202928	01/04/1979 00:00	5	2	GREATER THAN 50MPH	VERGE	1250	SINGLE ARM	MID GREY	RIGID COLUMN	URBIS	AXIA 2 S1	CU	SHEET STEEL	10	PAINTED	MOTORWAY
46102254	A15 FROM HUMBER BRIDGE TO A1077	Barton upon Humber Parish	502033.56	422270.26	22NW	7085	00202962	01/04/1979 00:00	5	2	GREATER THAN 50MPH	VERGE	1250	SINGLE ARM	MID GREY	RIGID COLUMN	URBIS	AXIA 2 S1	CU	SHEET STEEL	10	PAINTED	MOTORWAY
46102254	A15 FROM HUMBER BRIDGE TO A1077	Barton upon Humber Parish	501984.5	421962.23	23M	7022	00202899	01/04/2022 00:00	5	2	GREATER THAN 50MPH	BACK OF FOOTPATH	1000	DOUBLE ARM	NOT APPLICABLE	RIGID COLUMN	PHILIPS	LUMA 1 80 LED	MALLATITE	TUBULAR STEEL	10	GALVANISED	TUBULAR
46102254	A15 FROM HUMBER BRIDGE TO A1077	Barton upon Humber Parish	502029.8	422028.12	23NE	7052	00202929	01/04/1985 00:00	5	2	GREATER THAN 50MPH	VERGE	1000	SINGLE ARM	NOT APPLICABLE	RIGID COLUMN	URBIS	AXIA 2 S1	PETITJEAN	SHEET STEEL	10	GALVANISED	THAMES
46102254	A15 FROM HUMBER BRIDGE TO A1077	Barton upon Humber Parish	502045.68	422298.23	23NW	7086	00202963	01/04/1979 00:00	5	2	GREATER THAN 50MPH	VERGE	1250	SINGLE ARM	MID GREY	RIGID COLUMN	URBIS	AXIA 2 S1	CU	SHEET STEEL	10	PAINTED	MOTORWAY
46102254	A15 FROM HUMBER BRIDGE TO A1077	Barton upon Humber Parish	501982.51	421925.14	24M	7023	00202900	01/04/2022 00:00	5	2	GREATER THAN 50MPH	BACK OF FOOTPATH	1000	DOUBLE ARM	NOT APPLICABLE	RIGID COLUMN	PHILIPS	LUMA 1 80 LED	MALLATITE	TUBULAR STEEL	10	GALVANISED	TUBULAR
46102254	A15 FROM HUMBER BRIDGE TO A1077	Barton upon Humber Parish	502027.11	421999.17	24NE	7053	00202930	01/04/1979 00:00	5	2	GREATER THAN 50MPH	VERGE	1250	SINGLE ARM	MID GREY	RIGID COLUMN	URBIS	AXIA 2 S1	CU	SHEET STEEL	10	PAINTED	MOTORWAY
46102254	A15 FROM HUMBER BRIDGE TO A1077	Barton upon Humber Parish	502058.85	422325.35	24NW	7087	00202964	01/04/1979 00:00	5	2	GREATER THAN 50MPH	VERGE	1250	SINGLE ARM	MID GREY	RIGID COLUMN	URBIS	AXIA 2 S1	CU	SHEET STEEL	10	PAINTED	MOTORWAY
46102254	A15 FROM HUMBER BRIDGE TO A1077	Barton upon Humber Parish	501983.1	421891.11	25M	7024	00202901	01/04/2022 00:00	5	2	GREATER THAN 50MPH	BACK OF FOOTPATH	1000	DOUBLE ARM	NOT APPLICABLE	RIGID COLUMN	PHILIPS	LUMA 1 80 LED	MALLATITE	TUBULAR STEEL	10	GALVANISED	TUBULAR
46102254	A15 FROM HUMBER BRIDGE TO A1077	Barton upon Humber Parish	502025.27	421968.99	25NE	7054	00202931	01/04/1979 00:00	5	2	GREATER THAN 50MPH	VERGE	1250	SINGLE ARM	MID GREY	RIGID COLUMN	URBIS	AXIA 2 S1	CU	SHEET STEEL	10	PAINTED	MOTORWAY
46102254	A15 FROM HUMBER BRIDGE TO A1077	Barton upon Humber Parish	502072.39	422350.94	25NW	7088	00202965	01/04/1979 00:00	5	2	GREATER THAN 50MPH	VERGE	1250	SINGLE ARM	MID GREY	RIGID COLUMN	URBIS	AXIA 2 S1	CU	SHEET STEEL	10	PAINTED	MOTORWAY
46102254	A15 FROM HUMBER BRIDGE TO A1077	Barton upon Humber Parish	501983.91	421852.97	26M	7025	00202902	01/04/2022 00:00	5	2	GREATER THAN 50MPH	BACK OF FOOTPATH	1000	DOUBLE ARM	NOT APPLICABLE	RIGID COLUMN	PHILIPS	LUMA 1 80 LED	MALLATITE	TUBULAR STEEL	10	GALVANISED	TUBULAR
46102254	A15 FROM HUMBER BRIDGE TO A1077	Barton upon Humber Parish	502025.92	421936.18	26NE	7055	00202932	01/04/1979 00:00	5	2	GREATER THAN 50MPH	VERGE	1250	SINGLE ARM	MID GREY	RIGID COLUMN	URBIS	AXIA 2 S1	CU	SHEET STEEL	10	PAINTED	MOTORWAY
46102254	A15 FROM HUMBER BRIDGE TO A1077	Barton upon Humber Parish	502087.63	422378.85	26NW	7089	00202966	01/04/1979 00:00	5	2	GREATER THAN 50MPH	VERGE	1250	SINGLE ARM	MID GREY	RIGID COLUMN	URBIS	AXIA 2 S1	CU	SHEET STEEL	10	PAINTED	MOTORWAY
46102254	A15 FROM HUMBER BRIDGE TO A1077	Barton upon Humber Parish	501985.76	421815.04	27M	7026	00202903	01/04/2022 00:00	5	2	GREATER THAN 50MPH	BACK OF FOOTPATH	1000	DOUBLE ARM	NOT APPLICABLE	RIGID COLUMN	PHILIPS	LUMA 1 80 LED	MALLATITE	TUBULAR STEEL	10	GALVANISED	TUBULAR
46102254	A15 FROM HUMBER BRIDGE TO A1077	Barton upon Humber Parish	502024.93	421910.96	27NE	7056	00202933	01/04/1979 00:00	5	2	GREATER THAN 50MPH	VERGE	1250	SINGLE ARM	MID GREY	RIGID COLUMN	URBIS	AXIA 2 S1	CU	SHEET STEEL	10	PAINTED	MOTORWAY
46102254	A15 FROM HUMBER BRIDGE TO A1077	Barton upon Humber Parish	502102.39	422404.38	27NW	7090	00202967	01/04/1979 00:00	5	2	GREATER THAN 50MPH	VERGE	1250	SINGLE ARM	MID GREY	RIGID COLUMN	URBIS	AXIA 2 S1	CU	SHEET STEEL	10	PAINTED	MOTORWAY
46102254	A15 FROM HUMBER BRIDGE TO A1077	Barton upon Humber Parish	501989.64	421778.12	28M	7027	00202904	01/04/2022 00:00	5	2	GREATER THAN 50MPH	BACK OF FOOTPATH	1000	DOUBLE ARM	NOT APPLICABLE	RIGID COLUMN	PHILIPS	LUMA 1 80 LED	MALLATITE	TUBULAR STEEL	10	GALVANISED	TUBULAR
46102254	A15 FROM HUMBER BRIDGE TO A1077	Barton upon Humber Parish	502026.2	421878.54	28NE	7057	00202934	01/04/1979 00:00	5	2	GREATER THAN 50MPH	VERGE	1250	SINGLE ARM	MID GREY	RIGID COLUMN	URBIS	AXIA 2 S1	CU	SHEET STEEL	10	PAINTED	MOTORWAY
46102254	A15 FROM HUMBER BRIDGE TO A1077	Barton upon Humber Parish	502119.36	422430.17	28NW	7091	00202968	01/04/1979 00:00	5	2	GREATER THAN 50MPH	VERGE	1250	SINGLE ARM	MID GREY	RIGID COLUMN	URBIS	AXIA 2 S1	CU	SHEET STEEL	10	PAINTED	MOTORWAY
46102254	A15 FROM HUMBER BRIDGE TO A1077	Barton upon Humber Parish	501994.02	421743.06	29M	7028	00202905	01/04/2022 00:00	5	2	GREATER THAN 50MPH	BACK OF FOOTPATH	1000	DOUBLE ARM	NOT APPLICABLE	RIGID COLUMN	PHILIPS	LUMA 1 80 LED	MALLATITE	TUBULAR STEEL	10	GALVANISED	TUBULAR
46102254	A15 FROM HUMBER BRIDGE TO A1077	Barton upon Humber Parish	502029.1	421848.71	29NE	7058	00202935	01/04/1979 00:00	5	2	GREATER THAN 50MPH	VERGE	1250	SINGLE ARM	MID GREY	RIGID COLUMN	URBIS	AXIA 2 S1	CU	SHEET STEEL	10	PAINTED	MOTORWAY
46102254	A15 FROM HUMBER BRIDGE TO A1077	Barton upon Humber Parish	502136.7	422454.67	29NW	7092	00202969	01/04/1979 00:00	5	2	GREATER THAN 50MPH	VERGE	1250	SINGLE ARM	MID GREY	RIGID COLUMN	URBIS	AXIA 2 S1	CU	SHEET STEEL	10	PAINTED	MOTORWAY
46102254	A15 FROM HUMBER BRIDGE TO A1077	Barton upon Humber Parish	502286.46	422621.78	2M	7001	00202878	01/04/2022 00:00	5	2	GREATER THAN 50MPH	BACK OF FOOTPATH	1000	DOUBLE ARM	NOT APPLICABLE	RIGID COLUMN	PHILIPS	LUMA 1 80 LED	MALLATITE	TUBULAR STEEL	10	GALVANISED	TUBULAR
46102254	A15 FROM HUMBER BRIDGE TO A1077	Barton upon Humber Parish	502279.23	422591.23	2NE	7031	00202908	01/04/1979 00:00	5	2	GREATER THAN 50MPH	VERGE	1250	SINGLE ARM	MID GREY	RIGID COLUMN	URBIS	AXIA 2 S1	CU	SHEET STEEL	10	PAINTED	MOTORWAY
46102254	A15 FROM HUMBER BRIDGE TO A1077	Barton upon Humber Parish	501900.88	421687.09	2NW	7065	00202942	01/04/1979 00:00	5	2	GREATER THAN 50MPH	VERGE	1250	SINGLE ARM	MID GREY	RIGID COLUMN	URBIS	AXIA 2 S1	CU	SHEET STEEL	10	PAINTED	MOTORWAY
46102254	A15 FROM HUMBER BRIDGE TO A1077	Barton upon Humber Parish	502000.19	421705.07	30M	7029	00202906	01/04/2022 00:00	5	2	GREATER THAN 50MPH	BACK OF FOOTPATH	1000	DOUBLE ARM	NOT APPLICABLE	RIGID COLUMN	PHILIPS	LUMA 1 80 LED	MALLATITE	TUBULAR STEEL	10	GALVANISED	TUBULAR
46102254	A15 FROM HUMBER BRIDGE TO A1077	Barton upon Humber Parish	502031.5	421818	30NE	7059	00202936	01/04/1979 00:00	5	2	GREATER THAN 50MPH	VERGE	1250	SINGLE ARM	MID GREY	RIGID COLUMN	URBIS	AXIA 2 S1	CU	SHEET STEEL	10	PAINTED	MOTORWAY
46102254	A15 FROM HUMBER BRIDGE TO A1077	Barton upon Humber Parish	502155.85	422479.8	30NW	7093	00202970	01/04/1979 00:00	5	2	GREATER THAN 50MPH	VERGE	1250	SINGLE ARM	MID GREY	RIGID COLUMN	URBIS	AXIA 2 S1	CU	SHEET STEEL	10	PAINTED	MOTORWAY
46102254	A15 FROM HUMBER BRIDGE TO A1077	Barton upon Humber Parish	502035.34	421787.59	31NE	7060	00202937	01/04/1979 00:00	5	2	GREATER THAN 50MPH	VERGE	1250	SINGLE ARM	MID GREY	RIGID COLUMN	URBIS	AXIA 2 S1	CU	SHEET STEEL	10	PAINTED	MOTORWAY
46102254	A15 FROM HUMBER BRIDGE TO A1077	Barton upon Humber Parish	502173.76	422502.52	31NW	7094	00202971	01/04/1979 00:00	5	2	GREATER THAN 50MPH	VERGE	1250	SINGLE ARM	MID GREY	RIGID COLUMN	URBIS	AXIA 2 S1	CU	SHEET STEEL	10	PAINTED	MOTORWAY
46102254	A15 FROM HUMBER BRIDGE TO A1077	Barton upon Humber Parish	502039.65	421760.55	32NE	7061	00202938	01/04/1979 00:00	5	2	GREATER THAN 50MPH	VERGE	1250	SINGLE ARM	MID GREY	RIGID COLUMN	URBIS	AXIA 2 S1	CU	SHEET STEEL	10	PAINTED	MOTORWAY
46102254	A15 FROM HUMBER BRIDGE TO A1077	Barton upon Humber Parish	502044.44	421736.22	33NE	7062	00202939	01/04/1979 00:00	5	2	GREATER THAN 50MPH	VERGE	1250	SINGLE ARM	MID GREY	RIGID COLUMN	URBIS	AXIA 2 S1	CU	SHEET STEEL	10	PAINTED	MOTORWAY
46102254	A15 FROM HUMBER BRIDGE TO A1077	Barton upon Humber Parish	502055.31	421713.83	34NE	7063	00202940	01/04/1979 00:00	5	2	GREATER THAN 50MPH	VERGE	1250	SINGLE ARM	MID GREY	RIGID COLUMN	URBIS	AXIA 2 S1	CU	SHEET STEEL	10	PAINTED	MOTORWAY
46102254	A15 FROM HUMBER BRIDGE TO A1077	Barton upon Humber Parish	502262.07	422593.58	3M	7002	00202879	01/04/2022 00:00	5	2	GREATER THAN 50MPH	BACK OF FOOTPATH	1000	DOUBLE ARM	NOT APPLICABLE	RIGID COLUMN	PHILIPS	LUMA 1 80 LED	MALLATITE	TUBULAR STEEL	10	GALVANISED	TUBULAR
46102254	A15 FROM HUMBER BRIDGE TO A1077	Barton upon Humber Parish	502260.09	422567.3	3NE	7032	00202909	01/04/1979 00:00	5	2	GREATER THAN 50MPH	VERGE	1250	SINGLE ARM	MID GREY	RIGID COLUMN	URBIS	AXIA 2 S1	CU	SHEET STEEL	10	PAINTED	MOTORWAY
46102254	A15 FROM HUMBER BRIDGE TO A1077	Barton upon Humber Parish	501904.91	421716.13	3NW	7066	00202943	01/04/1979 00:00	5	2	GREATER THAN 50MPH	VERGE	1250	SINGLE ARM	MID GREY	RIGID COLUMN	URBIS	AXIA 2 S1	CU	SHEET STEEL	10	PAINTED	MOTORWAY
46102254	A15 FROM HUMBER BRIDGE TO A1077	Barton upon Humber Parish	502241.33	422568.05	4M	7003	00202880	01/04/2022 00:00	5	2	GREATER THAN 50MPH	BACK OF FOOTPATH	1000	DOUBLE ARM	NOT APPLICABLE	RIGID COLUMN	PHILIPS	LUMA 1 80 LED	MALLATITE	TUBULAR STEEL	10	GALVANISED	TUBULAR
46102254	A15 FROM HUMBER BRIDGE TO A1077	Barton upon Humber Parish	502241.67	422543.27	4NE	7033	00202910	01/04/1985 00:00	5	2	GREATER THAN 50MPH	VERGE	1250	SINGLE ARM	MID GREY	RIGID COLUMN	URBIS	AXIA 2 S1	PETITJEAN	SHEET STEEL	10	PAINTED	THAMES
46102254	A15 FROM HUMBER BRIDGE TO A1077	Barton upon Humber Parish	501906.91	421746.23	4NW	7067	00202944	01/04/1979 00:00	5	2	GREATER THAN 50MPH	VERGE	1250	SINGLE ARM	MID GREY	RIGID COLUMN	URBIS	AXIA 2 S1	CU	SHEET STEEL	10	PAINTED	MOTORWAY
46102254	A15 FROM HUMBER BRIDGE TO A1077	Barton upon Humber Parish	502216.18	422539.31	5M	7004	00202881	01/04/2022 00:00	5	2	GREATER THAN 50MPH	BACK OF FOOTPATH	1000	DOUBLE ARM	NOT APPLICABLE	RIGID COLUMN	PHILIPS	LUMA 1 80 LED	MALLATITE	TUBULAR STEEL	10	GALVANISED	TUBULAR
46102254	A15 FROM HUMBER BRIDGE TO A1077	Barton upon Humber Parish	502222.32	422518.76	5NE	7034	00202911	01/04/1985 00:00	5	2	GREATER THAN 50MPH	VERGE	1250	SINGLE ARM	MID GREY	RIGID COLUMN	URBIS	AXIA 2 S1	PETITJEAN	SHEET STEEL	10	PAINTED	THAMES
46102254	A15 FROM HUMBER BRIDGE TO A1077	Barton upon Humber Parish	501909.33	421775.26	5NW	7068	00202945	01/04/1979 00:00	5	2	GREATER THAN 50MPH	VERGE	1250	SINGLE ARM	MID GREY	RIGID COLUMN	URBIS	AXIA 2 S1	CU	SHEET STEEL	10	PAINTED	MOTORWAY
46102254	A15 FROM HUMBER BRIDGE TO A1077	Barton upon Humber Parish	502196.7	422515.06	6M	7005	00202882	01/04/2022 00:00	5	2	GREATER THAN 50MPH	BACK OF FOOTPATH	1000	DOUBLE ARM	NOT APPLICABLE	RIGID COLUMN	PHILIPS	LUMA 1 80 LED	MALLATITE	TUBULAR STEEL	10	GALVANISED	TUBULAR
46102254	A15 FROM HUMBER BRIDGE TO A1077	Barton upon Humber Parish	502206.74	422498.81	6NE	7035	00202912	01/04/1979 00:00	5	2	GREATER THAN 50MPH	VERGE	1250	SINGLE ARM	MID GREY	RIGID COLUMN	URBIS	AXIA 2 S1	CU	SHEET STEEL	10	PAINTED	MOTORWAY
46102254	A15 FROM HUMBER BRIDGE TO A1077	Barton upon Humber Parish	501912.77	421804.36	6NW	7069	00202946	01/04/1979 00:00	5	2	GREATER THAN 50MPH	VERGE	1250	SINGLE ARM	MID GREY	RIGID COLUMN	URBIS	AXIA 2 S1	CU	SHEET STEEL	10	PAINTED	MOTORWAY
46102254	A15 FROM HUMBER BRIDGE TO A1077	Barton upon Humber Parish	502172.63	422483.93	7M	7006	00202883	01/04/2022 00:00	5	2	GREATER THAN 50MPH	BACK OF FOOTPATH	1000	DOUBLE ARM	NOT APPLICABLE	RIGID COLUMN	PHILIPS	LUMA 1 80 LED	MALLATITE	TUBULAR STEEL	10	GALVANISED	TUBULAR
46102254	A15 FROM HUMBER BRIDGE TO A1077	Barton upon Humber Parish	502188.79	422470.49	7NE	7036	00202913	01/04/1979 00:00	5	2	GREATER THAN 50MPH	VERGE	1250	SINGLE ARM	MID GREY	RIGID COLUMN	URBIS	AXIA 2 S1	CU	SHEET STEEL	10	PAINTED	MOTORWAY
46102254	A15 FROM HUMBER BRIDGE TO A1077	Barton upon Humber Parish	501915.99	421835	7NW	7070	00202947	01/04/1979 00:00	5	2	GREATER THAN 50MPH	VERGE	1250	SINGLE ARM	MID GREY	RIGID COLUMN	URBIS	AXIA 2 S1	CU	SHEET STEEL	10	PAINTED	MOTORWAY
46102254	A15 FROM HUMBER BRIDGE TO A1077	Barton upon Humber Parish	502152.68	422456.41	8M	7007	00202884	01/04/2022 00:00	5	2	GREATER THAN 50MPH	BACK OF FOOTPATH	1000	DOUBLE ARM	NOT APPLICABLE	RIGID COLUMN	PHILIPS	LUMA 1 80 LED	MALLATITE	TUBULAR STEEL	10	GALVANISED	TUBULAR
46102254	A15 FROM HUMBER BRIDGE TO A1077	Barton upon Humber Parish	502172.83	422444.96	8NE	7037	00202914	01/04/1979 00:00	5	2	GREATER THAN 50MPH	VERGE	1250	SINGLE ARM	MID GREY	RIGID COLUMN	URBIS	AXIA 2 S1	CU	SHEET STEEL	10	PAINTED	MOTORWAY
46102254	A15 FROM HUMBER BRIDGE TO A1077	Barton upon Humber Parish	501919.91	421864.59	8NW	7071	00202948	01/04/1979 00:00	5	2	GREATER THAN 50MPH	VERGE	1250	SINGLE ARM	MID GREY	RIGID COLUMN	URBIS	AXIA 2 S1	CU	SHEET STEEL	10	PAINTED	MOTORWAY
46102254	A15 FROM HUMBER BRIDGE TO A1077	Barton upon Humber Parish	502133.36	422426.22	9M	7008	00202885	01/04/2022 00:00	5	2	GREATER THAN 50MPH	BACK OF FOOTPATH	1000	DOUBLE ARM	NOT APPLICABLE	RIGID COLUMN	PHILIPS	LUMA 1 80 LED	MALLATITE	TUBULAR STEEL	10	GALVANISED	TUBULAR
46102254	A15 FROM HUMBER BRIDGE TO A1077	Barton upon Humber Parish	502155.74	422417.73	9NE	7038	00202915	01/04/1979 00:00	5	2	GREATER THAN 50MPH	VERGE	1250	SINGLE ARM	MID GREY	RIGID COLUMN	URBIS	AXIA 2 S1	CU	SHEET STEEL	10	PAINTED	MOTORWAY
46102254	A15 FROM HUMBER BRIDGE TO A1077	Barton upon Humber Parish	501924.47	421892.67	9NW	7072	00202949	01/04/1979 00:00	5	2	GREATER THAN 50MPH	VERGE	1250	SINGLE ARM	MID GREY	RIGID COLUMN	URBIS	AXIA 2 S1	CU	SHEET STEEL	10	PAINTED	MOTORWAY
46102255	A15 FROM A1077 TO B1206	Barton upon Humber Parish	502130.49	421308.31	10SE	7035	00203007	01/04/1979 00:00	5	2	GREATER THAN 50MPH	VERGE	1250	SINGLE ARM	MID GREY	RIGID COLUMN	URBIS	AXIA 2 S1	CU	SHEET STEEL	10	PAINTED	MOTORWAY
46102255	A15 FROM A1077 TO B1206	Barton upon Humber Parish	502140.45	421116.62	10SW	7059	00203031	01/04/1979 00:00	5	2	GREATER THAN 50MPH	VERGE	1250	SINGLE ARM	MID GREY	RIGID COLUMN	URBIS	AXIA 2 S1	CU	SHEET STEEL	10	PAINTED	MOTORWAY
46102255	A15 FROM A1077 TO B1206	Barton upon Humber Parish	502137.12	421277.24	11SE	7036	00203008	01/04/1979 00:00	5	2	GREATER THAN 50MPH	VERGE	1250	SINGLE ARM	MID GREY	RIGID COLUMN	URBIS	AXIA 2 S1	CU	SHEET STEEL	10	PAINTED	MOTORWAY
46102255	A15 FROM A1077 TO B1206	Barton upon Humber Parish	502127.01	421143.5	11SW	7060	00203032	01/04/1979 00:00	5	2	GREATER THAN 50MPH	VERGE	1250	SINGLE ARM	MID GREY	RIGID COLUMN	URBIS	AXIA 2 S1	CU	SHEET STEEL	10	PAINTED	MOTORWAY
46102255	A15 FROM A1077 TO B1206	Barton upon Humber Parish	502144	421247.84	12SE	7037	00203009	01/04/1979 00:00	5	2	GREATER THAN 50MPH	VERGE	1250	SINGLE ARM	MID GREY	RIGID COLUMN	URBIS	AXIA 2 S1	CU	SHEET STEEL	10	PAINTED	MOTORWAY
46102255	A15 FROM A1077 TO B1206	Barton upon Humber Parish	502113.84	421169.35	12SW	7061	00203033	01/04/1985 00:00	5	2	GREATER THAN 50MPH	VERGE	1000	SINGLE ARM	MID GREY	RIGID COLUMN	URBIS	AXIA 2 S1	PETITJEAN	SHEET STEEL	10	PAINTED	THAMES
46102255	A15 FROM A1077 TO B1206	Barton upon Humber Parish	502149.54	421219.03	13SE	7038	00203010	01/04/1979 00:00	5	2	GREATER THAN 50MPH	VERGE	1250	SINGLE ARM	MID GREY	RIGID COLUMN	URBIS	AXIA 2 S1	CU	SHEET STEEL	10	PAINTED	MOTORWAY
46102255	A15 FROM A1077 TO B1206	Barton upon Humber Parish	502101.47	421197.84	13SW	7062	00203034	01/04/1979 00:00	5	2	GREATER THAN 50MPH	VERGE	1250	SINGLE ARM	MID GREY	RIGID COLUMN	URBIS	AXIA 2 S1	CU	SHEET STEEL	10	PAINTED	MOTORWAY
46102255	A15 FROM A1077 TO B1206	Barton upon Humber Parish	502159.22	421186.9	14SE	7039	00203011	01/04/1979 00:00	5	2	GREATER THAN 50MPH	VERGE	1250	SINGLE ARM	MID GREY	RIGID COLUMN	URBIS	AXIA 2 S1	CU	SHEET STEEL	10	PAINTED	MOTORWAY
46102255	A15 FROM A1077 TO B1206	Barton upon Humber Parish	502089	421226.54	14SW	7063	00203035	01/04/1979 00:00	5	2	GREATER THAN 50MPH	VERGE	1250	SINGLE ARM	MID GREY	RIGID COLUMN	URBIS	AXIA 2 S1	CU	SHEET STEEL	10	PAINTED	MOTORWAY
46102255	A15 FROM A1077 TO B1206	Barton upon Humber Parish	502167.62	421160.18	15SE	7040	00203012	01/04/1979 00:00	5	2	GREATER THAN 50MPH	VERGE	1250	SINGLE ARM	MID GREY	RIGID COLUMN	URBIS	AXIA 2 S1	CU	SHEET STEEL	10	PAINTED	MOTORWAY
46102255	A15 FROM A1077 TO B1206	Barton upon Humber Parish	502078.17	421251.26	15SW	7064	00203036	01/04/1979 00:00	5	2	GREATER THAN 50MPH	VERGE	1250	SINGLE ARM	MID GREY	RIGID COLUMN	URBIS	AXIA 2 S1	CU	SHEET STEEL	10	PAINTED	MOTORWAY
46102255	A15 FROM A1077 TO B1206	Barton upon Humber Parish

46102278	ALPINA CLOSE	Scunthorpe	490655	407842	3	7003	00212391		NA	NA	NOT APPLICABLE	NOT APPLICABLE	NA	NOT APPLICA	NOT APPLICABLE	NOT APPLICABLE	OT APPLICABL	NOT APPLICABLE	NOT APPLICA	NOT APPLICABLE	NA	NOT APPLICABI	Not Applicable		
46102278	ALPINA CLOSE	Scunthorpe	490630.47	407835.88	4	7004	00212392		NA	NA	NOT APPLICABLE	NOT APPLICABLE	NA	NOT APPLICA	NOT APPLICABLE	NOT APPLICABLE	OT APPLICABL	NOT APPLICABLE	NOT APPLICA	NOT APPLICABLE	NA	NOT APPLICABI	Not Applicable		
46102289	B1400 FROM B1398 TO B1205	Kirton in Lindsey Parish	494112.89	398027.87	1	7000	00203099	01/04/1973 00:00	1	3	BETWEEN 30-50 MPH	FRONT OF FOOTPATH	800	SINGLE ARM	NOT APPLICABLE	RIGID COLUMN	URBIS	AXIA 2 S1	THORN	ALUMINIUM	8	ALUMINIUM	QC8		
46102289	B1400 FROM B1398 TO B1205	Kirton in Lindsey Parish	494395.21	397863.7	10	7009	00203108	25/02/2022 00:00	1	3	BETWEEN 30-50 MPH	VERGE	1000	SINGLE ARM	NOT APPLICABLE	RIGID COLUMN	URBIS	AXIA 2 S1	MALLATITE	TUBULAR STEEL	8	GALVANISED	TUBULAR		
46102289	B1400 FROM B1398 TO B1205	Kirton in Lindsey Parish	494433.03	397855.24	11	7010	00203109	25/02/2022 00:00	1	3	BETWEEN 30-50 MPH	VERGE	1000	SINGLE ARM	NOT APPLICABLE	RIGID COLUMN	URBIS	AXIA 2 S1	MALLATITE	TUBULAR STEEL	8	GALVANISED	TUBULAR		
46102289	B1400 FROM B1398 TO B1205	Kirton in Lindsey Parish	494458.78	397830.03	12	7011	00203110	25/02/2022 00:00	1	3	BETWEEN 30-50 MPH	VERGE	1000	SINGLE ARM	NOT APPLICABLE	RIGID COLUMN	URBIS	AXIA 2 S1	MALLATITE	TUBULAR STEEL	8	GALVANISED	TUBULAR		
46102289	B1400 FROM B1398 TO B1205	Kirton in Lindsey Parish	494490.62	397812.78	13	7012	00203111	25/02/2022 00:00	1	3	BETWEEN 30-50 MPH	VERGE	1000	SINGLE ARM	NOT APPLICABLE	RIGID COLUMN	URBIS	AXIA 2 S1	MALLATITE	TUBULAR STEEL	8	GALVANISED	TUBULAR		
46102289	B1400 FROM B1398 TO B1205	Kirton in Lindsey Parish	494523.72	397794.14	14	7013	00203112	25/02/2022 00:00	1	3	BETWEEN 30-50 MPH	VERGE	1000	SINGLE ARM	NOT APPLICABLE	RIGID COLUMN	URBIS	AXIA 2 S1	MALLATITE	TUBULAR STEEL	8	GALVANISED	TUBULAR		
46102289	B1400 FROM B1398 TO B1205	Kirton in Lindsey Parish	494143.27	398000.49	2FP	7001	00203100	01/04/1973 00:00	1	3	BETWEEN 30-50 MPH	VERGE	1000	SINGLE ARM	MID GREY	RIGID COLUMN	URBIS	AXIA 2 S1	PETITJEAN	SHEET STEEL	8	PAINTED	THAMES		
46102289	B1400 FROM B1398 TO B1205	Kirton in Lindsey Parish	494180.24	397993.08	3FP	7002	00203101	01/04/1973 00:00	1	3	BETWEEN 30-50 MPH	FRONT OF FOOTPATH	800	SINGLE ARM	NOT APPLICABLE	RIGID COLUMN	URBIS	AXIA 2 S1	THORN	ALUMINIUM	8	ALUMINIUM	QC8		
46102289	B1400 FROM B1398 TO B1205	Kirton in Lindsey Parish	494204.12	397966.98	4	7003	00203102	25/02/2022 00:00	1	3	BETWEEN 30-50 MPH	VERGE	1000	SINGLE ARM	NOT APPLICABLE	RIGID COLUMN	URBIS	AXIA 2 S1	MALLATITE	TUBULAR STEEL	8	GALVANISED	TUBULAR		
46102289	B1400 FROM B1398 TO B1205	Kirton in Lindsey Parish	494238.87	397961.11	5	7004	00203103	25/02/2022 00:00	1	3	BETWEEN 30-50 MPH	VERGE	1000	SINGLE ARM	NOT APPLICABLE	RIGID COLUMN	URBIS	AXIA 2 S1	MALLATITE	TUBULAR STEEL	8	GALVANISED	TUBULAR		
46102289	B1400 FROM B1398 TO B1205	Kirton in Lindsey Parish	494262.65	397936.02	6	7005	00203104	13/03/2020 00:00	1	3	BETWEEN 30-50 MPH	VERGE	1000	POST TOP	NOT APPLICABLE	RIGID COLUMN	URBIS	AXIA 2 S1	MALLATITE	TUBULAR STEEL	8	GALVANISED	TUBULAR		
46102289	B1400 FROM B1398 TO B1205	Kirton in Lindsey Parish	494303.72	397926.67	7	7006	00203105	25/02/2022 00:00	1	3	BETWEEN 30-50 MPH	VERGE	1000	SINGLE ARM	NOT APPLICABLE	RIGID COLUMN	URBIS	AXIA 2 S1	MALLATITE	TUBULAR STEEL	8	GALVANISED	TUBULAR		
46102289	B1400 FROM B1398 TO B1205	Kirton in Lindsey Parish	494331.3	397898.06	8	7007	00203106	25/02/2022 00:00	1	3	BETWEEN 30-50 MPH	VERGE	1000	SINGLE ARM	NOT APPLICABLE	RIGID COLUMN	URBIS	AXIA 2 S1	MALLATITE	TUBULAR STEEL	8	GALVANISED	TUBULAR		
46102289	B1400 FROM B1398 TO B1205	Kirton in Lindsey Parish	494371.62	397888.6	9	7008	00203107	25/02/2022 00:00	1	3	BETWEEN 30-50 MPH	VERGE	1000	SINGLE ARM	NOT APPLICABLE	RIGID COLUMN	URBIS	AXIA 2 S1	MALLATITE	TUBULAR STEEL	8	GALVANISED	TUBULAR		
46102295	RYE WALK	Hibaldstow Parish	497983.23	402493.41	1	7001	04200653	15/02/2018 00:00	1	4	LESS THAN 30MPH	BACK OF FOOTPATH	0	POST TOP	NOT APPLICABLE	RIGID COLUMN	PHILIPS	STELA LONG 18 LED	MALLATITE	TUBULAR STEEL	6	GALVANISED	TUBULAR		
46102295	RYE WALK	Hibaldstow Parish	498016.81	402495.23	2	7002	04200654	15/02/2018 00:00	1	4	LESS THAN 30MPH	BACK OF FOOTPATH	NA	POST TOP	NOT APPLICABLE	RIGID COLUMN	PHILIPS	STELA LONG 18 LED	MALLATITE	TUBULAR STEEL	6	GALVANISED	TUBULAR		
46102295	RYE WALK	Hibaldstow Parish	498045.39	402504.9	3	7003	04200655	15/02/2018 00:00	1	4	LESS THAN 30MPH	BACK OF FOOTPATH	0	POST TOP	NOT APPLICABLE	RIGID COLUMN	PHILIPS	STELA LONG 18 LED	MALLATITE	TUBULAR STEEL	6	GALVANISED	TUBULAR		
46102296	WHEAT LANE	Hibaldstow Parish	498094.66	402434.79	1	7001	04200656	15/02/2018 00:00	1	4	LESS THAN 30MPH	BACK OF FOOTPATH	0	POST TOP	NOT APPLICABLE	RIGID COLUMN	PHILIPS	STELA LONG 18 LED	MALLATITE	TUBULAR STEEL	6	GALVANISED	TUBULAR		
46102296	WHEAT LANE	Hibaldstow Parish	498056.75	402443.18	2	7002	04200657	15/02/2018 00:00	1	4	LESS THAN 30MPH	BACK OF FOOTPATH	0	POST TOP	NOT APPLICABLE	RIGID COLUMN	PHILIPS	STELA LONG 18 LED	MALLATITE	TUBULAR STEEL	6	GALVANISED	TUBULAR		
46102296	WHEAT LANE	Hibaldstow Parish	498046.81	402428.78	3	7003	04200658	15/02/2018 00:00	1	4	LESS THAN 30MPH	BACK OF FOOTPATH	0	POST TOP	NOT APPLICABLE	RIGID COLUMN	PHILIPS	STELA LONG 18 LED	MALLATITE	TUBULAR STEEL	6	GALVANISED	TUBULAR		
46102296	WHEAT LANE	Hibaldstow Parish	498053.53	402393.94	4	7004	04200659	15/02/2018 00:00	1	4	LESS THAN 30MPH	BACK OF FOOTPATH	0	POST TOP	NOT APPLICABLE	RIGID COLUMN	PHILIPS	STELA LONG 18 LED	MALLATITE	TUBULAR STEEL	6	GALVANISED	TUBULAR		
46102303	ACCESS ROAD TO STATION ROAD INDUSTRIAL E	Epworth Parish	477546.7	404418.26	1	7000	00194054	01/11/2023 00:00	5	3	LESS THAN 30MPH	BACK OF FOOTPATH	500	SINGLE ARM	NOT APPLICABLE	RIGID COLUMN	URBIS	AXIA 2 S1	MALLATITE	TUBULAR STEEL	8	GALVANISED	MALLATITE		
46102303	ACCESS ROAD TO STATION ROAD INDUSTRIAL E	Epworth Parish	477586.3	404448.01	2	7001	00194057	01/11/2023 00:00	5	3	LESS THAN 30MPH	BACK OF FOOTPATH	500	SINGLE ARM	NOT APPLICABLE	RIGID COLUMN	URBIS	AXIA 2 S1	MALLATITE	TUBULAR STEEL	8	GALVANISED	MALLATITE		
46102303	ACCESS ROAD TO STATION ROAD INDUSTRIAL E	Epworth Parish	477599.27	404484.54	3	7002	00194059	01/11/2023 00:00	5	3	LESS THAN 30MPH	BACK OF FOOTPATH	500	SINGLE ARM	NOT APPLICABLE	RIGID COLUMN	URBIS	AXIA 2 S1	MALLATITE	TUBULAR STEEL	8	GALVANISED	MALLATITE		
46102303	ACCESS ROAD TO STATION ROAD INDUSTRIAL E	Epworth Parish	477584.19	404513.1	4	7003	00194061	01/11/2023 00:00	5	3	LESS THAN 30MPH	BACK OF FOOTPATH	500	SINGLE ARM	NOT APPLICABLE	RIGID COLUMN	URBIS	AXIA 2 S1	MALLATITE	TUBULAR STEEL	6	GALVANISED	MALLATITE		
46102303	ACCESS ROAD TO STATION ROAD INDUSTRIAL E	Epworth Parish	477603.93	404527.61	5	7004	00194063	01/11/2023 00:00	5	3	LESS THAN 30MPH	BACK OF FOOTPATH	500	SINGLE ARM	NOT APPLICABLE	RIGID COLUMN	URBIS	AXIA 2 S1	MALLATITE	TUBULAR STEEL	8	GALVANISED	MALLATITE		
46102308	UNNAMED ROAD AT SOUTH END OF WHARF ROAD	Crowle Parish	478372.8	411206.9	1	7006	04200012	11/10/2018 00:00	5	1	LESS THAN 30MPH	VERGE	500	POST TOP	NOT APPLICABLE	RIGID COLUMN	URBIS	AXIA 2 S1	MALLATITE	TUBULAR STEEL	8	GALVANISED	TUBULAR		
46102308	UNNAMED ROAD AT SOUTH END OF WHARF ROAD	Crowle Parish	478353.3	411211.9	2	7005	04200011	11/10/2018 00:00	5	1	LESS THAN 30MPH	VERGE	500	POST TOP	NOT APPLICABLE	RIGID COLUMN	URBIS	AXIA 2 S1	MALLATITE	TUBULAR STEEL	8	GALVANISED	TUBULAR		
46102308	UNNAMED ROAD AT SOUTH END OF WHARF ROAD	Crowle Parish	478326.5	411218.5	3	7002	04200009	11/10/2018 00:00	5	1	LESS THAN 30MPH	VERGE	0	POST TOP	NOT APPLICABLE	RIGID COLUMN	URBIS	AXIA 2 S1	MALLATITE	TUBULAR STEEL	8	GALVANISED	TUBULAR		
46102309	ACCESS ROAD TO LEISURE COMPLEX AND INDUS	Crowle Parish	478256.77	411216.01	1FP	7000	00203113	01/04/1989 00:00	5	1	LESS THAN 30MPH	BACK OF FOOTPATH	1000	SINGLE ARM	NOT APPLICABLE	RIGID COLUMN	URBIS	AXIA 2 S1	PETITJEAN	SHEET STEEL	8	GALVANISED	THAMES		
46102309	ACCESS ROAD TO LEISURE COMPLEX AND INDUS	Crowle Parish	478230.96	411236.71	2FP	7001	00203114	01/04/1989 00:00	5	1	LESS THAN 30MPH	VERGE	1000	SINGLE ARM	NOT APPLICABLE	RIGID COLUMN	URBIS	AXIA 2 S1	PETITJEAN	SHEET STEEL	8	GALVANISED	THAMES		
46102324	OWSTON FERRY ROAD	Haxey Parish	478037.44	402148.29	1	7000	00203115	22/11/2018 00:00	6	2	LESS THAN 30MPH	ON POLE	300	SINGLE ARM	DARK GREY	POLE MOUNTED	URBIS	AXIA 2 S1	WOODEN PO	WOOD	5	PAINTED	PUDSEY DIAMOND		
46102324	OWSTON FERRY ROAD	Haxey Parish	478060.31	402098.47	2	7001	00203116	22/11/2018 00:00	6	2	LESS THAN 30MPH	ON POLE	300	SINGLE ARM	DARK GREY	POLE MOUNTED	URBIS	AXIA 2 S1	WOODEN PO	WOOD	5	PAINTED	PUDSEY DIAMOND		
46102324	OWSTON FERRY ROAD	Haxey Parish	478067.27	402056.95	3	7002	00203117	22/11/2018 00:00	6	2	LESS THAN 30MPH	ON POLE	300	SINGLE ARM	DARK GREY	POLE MOUNTED	URBIS	AXIA 2 S1	WOODEN PO	WOOD	5	PAINTED	PUDSEY DIAMOND		
46102324	OWSTON FERRY ROAD	Haxey Parish	478061.74	402027.96	4	7003	00203118	01/04/2016 00:00	6	2	LESS THAN 30MPH	ON POLE	300	SINGLE ARM	NOT APPLICABLE	POLE MOUNTED	URBIS	AXIA 2 S1	WOODEN PO	WOOD	5	NOT APPLICABI	Not Applicable		
46102327	BURTON UPON STATHER ROAD	Alkborough Parish	487960.1	421016.3	1	7000	00203119	01/04/1973 00:00	1	2	NOT ON A ROAD	WALL	800	SINGLE ARM	NOT APPLICABLE	WALL MOUNTED	URBIS	AXIA 2 S1	WALL MOUN	NOT APPLICABLE	5	NOT APPLICABI	Not Applicable		
46102327	BURTON UPON STATHER ROAD	Alkborough Parish	487844.1	420969.4	2	7001	00203120	01/04/1973 00:00	1	2	BETWEEN 30-50 MPH	ON POLE	800	SINGLE ARM	NOT APPLICABLE	POLE MOUNTED	URBIS	AXIA 2 S1	WOODEN PO	WOOD	5	NOT APPLICABI	Not Applicable		
46102327	BURTON UPON STATHER ROAD	Alkborough Parish	487755.3	420703.5	3	7002	00203121	01/04/1973 00:00	1	2	LESS THAN 30MPH	ON POLE	800	SINGLE ARM	NOT APPLICABLE	POLE MOUNTED	URBIS	AXIA 2 S1	WOODEN PO	WOOD	5	NOT APPLICABI	Not Applicable		
46102327	BURTON UPON STATHER ROAD	Alkborough Parish	487758.7	420626.6	4	7003	00203122	01/04/1973 00:00	1	2	LESS THAN 30MPH	ON POLE	800	SINGLE ARM	NOT APPLICABLE	POLE MOUNTED	URBIS	AXIA 2 S1	WOODEN PO	WOOD	5	NOT APPLICABI	Not Applicable		
46102327	BURTON UPON STATHER ROAD	Alkborough Parish	487759.5	420574.4	5	7004	00203123	01/04/1973 00:00	1	2	LESS THAN 30MPH	ON POLE	800	SINGLE ARM	NOT APPLICABLE	POLE MOUNTED	URBIS	AXIA 2 S1	WOODEN PO	WOOD	5	NOT APPLICABI	Not Applicable		
46102327	BURTON UPON STATHER ROAD	Alkborough Parish	487765.3	420519.8	6	7005	00203124	01/04/1973 00:00	1	2	LESS THAN 30MPH	ON POLE	800	SINGLE ARM	NOT APPLICABLE	POLE MOUNTED	URBIS	AXIA 2 S1	WOODEN PO	WOOD	5	NOT APPLICABI	Not Applicable		
46102329	THEALBY ROAD	Burton upon Stather Parish	488400.1	416757.17	1FP	7001	00203126	01/04/1990 00:00	2	3	GREATER THAN 50MPH	VERGE	800	SINGLE ARM	NOT APPLICABLE	RIGID COLUMN	URBIS	AXIA 2 S1	PETITJEAN	SHEET STEEL	8	NOT APPLICABI	THAMES		
46102329	THEALBY ROAD	Burton upon Stather Parish	488409.97	416789.08	2	7000	00203125	01/04/1990 00:00	2	3	GREATER THAN 50MPH	VERGE	800	SINGLE ARM	NOT APPLICABLE	RIGID COLUMN	URBIS	AXIA 2 S1	PETITJEAN	SHEET STEEL	8	NOT APPLICABI	THAMES		
46102336	WEST HALTON ROAD	West Halton Parish	489917.37	419503.75	1	7000	00203127	01/04/1980 00:00	1	3	LESS THAN 30MPH	VERGE	300	SINGLE ARM	NOT APPLICABLE	RIGID COLUMN	URBIS	AXIA 2 S1	PETITJEAN	SHEET STEEL	5	GALVANISED	DAER		
46102336	WEST HALTON ROAD	West Halton Parish	489984.79	419890.72	10	7009	00203136	02/09/2020 00:00	1	3	LESS THAN 30MPH	ON POLE	300	SINGLE ARM	NOT APPLICABLE	POLE MOUNTED	URBIS	AXIA 2 S1	WOODEN PO	WOOD	5	NOT APPLICABI	Not Applicable		
46102336	WEST HALTON ROAD	West Halton Parish	489906.59	419540.4	2	7001	00203128	01/04/1980 00:00	1	3	LESS THAN 30MPH	VERGE	300	SINGLE ARM	NOT APPLICABLE	RIGID COLUMN	URBIS	AXIA 2 S1	PETITJEAN	SHEET STEEL	5	GALVANISED	DAER		
46102336	WEST HALTON ROAD	West Halton Parish	489893.35	419597.75	3	7002	00203129	01/04/1980 00:00	1	3	LESS THAN 30MPH	VERGE	0	POST TOP	NOT APPLICABLE	RIGID COLUMN	URBIS	AXIA 2 S1	PETITJEAN	SHEET STEEL	5	GALVANISED	NIDD		
46102336	WEST HALTON ROAD	West Halton Parish	489871.46	419643.68	4	7003	00203130	11/06/2019 00:00	1	3	LESS THAN 30MPH	BACK OF FOOTPATH	0	POST TOP	NOT APPLICABLE	RIGID COLUMN	URBIS	AXIA 2 S1	MALLATITE	TUBULAR STEEL	6	GALVANISED	TUBULAR		
46102336	WEST HALTON ROAD	West Halton Parish	489873.07	419701.56	5	7004	00203131	01/04/1980 00:00	1	3	LESS THAN 30MPH	ON POLE	300	SINGLE ARM	NOT APPLICABLE	POLE MOUNTED	URBIS	AXIA 2 S1	WOODEN PO	WOOD	5	NOT APPLICABI	Not Applicable		
46102336	WEST HALTON ROAD	West Halton Parish	489869.92	419734.33	6	7005	00203132	01/04/1980 00:00	1	3	LESS THAN 30MPH	ON POLE	300	SINGLE ARM	NOT APPLICABLE	POLE MOUNTED	URBIS	AXIA 2 S1	WOODEN PO	WOOD	5	NOT APPLICABI	Not Applicable		
46102336	WEST HALTON ROAD	West Halton Parish	489883.79	419759.55	7	7006	00203133	01/04/1980 00:00	1	3	LESS THAN 30MPH	ON POLE	300	SINGLE ARM	NOT APPLICABLE	POLE MOUNTED	URBIS	AXIA 2 S1	WOODEN PO	WOOD	5	NOT APPLICABI	Not Applicable		
46102336	WEST HALTON ROAD	West Halton Parish	489909.63	419781.61	8	7007	00203134	01/04/1980 00:00	1	3	LESS THAN 30MPH	ON POLE	300	SINGLE ARM	NOT APPLICABLE	POLE MOUNTED	URBIS	AXIA 2 S1	WOODEN PO	WOOD	5	NOT APPLICABI	Not Applicable		
46102336	WEST HALTON ROAD	West Halton Parish	489938	419809.34	9	7008	00203135	01/04/1980 00:00	1	3	LESS THAN 30MPH	ON POLE	300	SINGLE ARM	NOT APPLICABLE	POLE MOUNTED	URBIS	AXIA 2 S1	WOODEN PO	WOOD	5	NOT APPLICABI	Not Applicable		
46102363	CAISTOR ROAD	Barnetby Le Wold Parish	507285.68	410679.57	1	7000	00205891	01/04/1973 00:00	3	1	GREATER THAN 50MPH	ON POLE	500	SINGLE ARM	NOT APPLICABLE	POLE MOUNTED	URBIS	AXIA 2 S1	WOODEN PO	WOOD	5	NOT APPLICABI	Not Applicable		
46102363	CAISTOR ROAD	Barnetby Le Wold Parish	507340.32	410363.11	10	7009	00205900	01/04/1973 00:00	3	1	GREATER THAN 50MPH	ON POLE	500	SINGLE ARM	NOT APPLICABLE	POLE MOUNTED	URBIS	AXIA 2 S1	WOODEN PO	WOOD	5	NOT APPLICABI	Not Applicable		
46102363	CAISTOR ROAD	Barnetby Le Wold Parish	507347.05	410324.32	11	7010	00205901	02/10/2018 00:00	3	1	GREATER THAN 50MPH	VERGE	0	POST TOP	NOT APPLICABLE	RIGID COLUMN	URBIS	AXIA 2 S1	MALLATITE	TUBULAR STEEL	6	GALVANISED	TUBULAR		
46102363	CAISTOR ROAD	Barnetby Le Wold Parish	507342.77	410280.97	12	7011	00205902	01/04/1973 00:00	3	1	GREATER THAN 50MPH	ON POLE	500	SINGLE ARM	NOT APPLICABLE	POLE MOUNTED	URBIS	AXIA 2 S1	WOODEN PO	WOOD	5	NOT APPLICABI	Not Applicable		
46102363	CAISTOR ROAD	Barnetby Le Wold Parish	507349.96	410241.29	13	7012	00205903	01/04/1973 00:00	3	1	GREATER THAN 50MPH	ON POLE	500	SINGLE ARM	NOT APPLICABLE	POLE MOUNTED	URBIS	AXIA 2 S1	WOODEN PO	WOOD	5	NOT APPLICABI	Not Applicable		
46102363	CAISTOR ROAD	Barnetby Le Wold Parish	507357.72	410204.93	14	7013	00205904	01/04/1973 00:00	3	1	GREATER THAN 50MPH	ON POLE	500	SINGLE ARM	NOT APPLICABLE	POLE MOUNTED	URBIS	AXIA 2 S1	WOODEN PO	WOOD	5	NOT APPLICABI	Not Applicable		
46102363	CAISTOR ROAD	Barnetby Le Wold Parish	507364.84	410162.6	15	7014	00205905	01/04/1973 00:00	3	1	GREATER THAN 50MPH	ON POLE	500	SINGLE ARM	NOT APPLICABLE	POLE MOUNTED	URBIS	AXIA 2 S1	WOODEN PO	WOOD	5	NOT APPLICABI	Not Applicable		
46102363	CAISTOR ROAD	Barnetby Le Wold Parish	507373.58	410121.08	16	7015	00205906	01/04/1973 00:00	3	1	GREATER THAN 50MPH	ON POLE	500	SINGLE ARM	NOT APPLICABLE	POLE MOUNTED	URBIS	AXIA 2 S1	WOODEN PO	WOOD	5	NOT APPLICABI	Not Applicable		
46102363	CAISTOR ROAD	Barnetby Le Wold Parish	507381.75	410073.52	17	7016	00205907	01/04/1973 00:00	3	1	GREATER THAN 50MPH	ON POLE	500	SINGLE ARM	NOT APPLICABLE	POLE MOUNTED	URBIS	AXIA 2 S1	WOODEN PO	WOOD	5	NOT APPLICABI	Not Applicable		
46102363	CAISTOR ROAD	Barnetby Le Wold Parish	507290.93	410649.64	2	7001	00205892	01/04/1973 00:00	3	1	GREATER THAN 50MPH	ON POLE	500	SINGLE ARM	NOT APPLICABLE	POLE MOUNTED	URBIS	AXIA 2 S1	WOODEN PO	WOOD	5	NOT APPLICABI	Not Applicable		
46102363	CAISTOR ROAD	Barnetby Le Wold Parish	507299.32	410609.14	3	7002	00205893	01/04/1973 00:00	3	1	GREATER THAN 50MPH	ON POLE	500	SINGLE ARM	NOT APPLICABLE	POLE MOUNTED	URBIS	AXIA 2 S1	WOODEN PO	WOOD	5	NOT APPLICABI	Not Applicable		
46102363	CAISTOR ROAD	Barnetby Le Wold Parish	507306.31	410576.74	4	7003	00205894	01/04/1973 00:00	3	1	GREATER THAN 50MPH	ON POLE	500	SINGLE ARM	NOT APPLICABLE	POLE MOUNTED	URBIS	AXIA 2 S1	WOODEN PO	WOOD	5	NOT APPLICABI	Not Applicable		
46102363	CAISTOR ROAD	Barnetby Le Wold Parish	507325.09	410528.84	6	7005	00205896	01/04/1973 00:00	3	1	GREATER THAN 50MPH	ON POLE	500	SINGLE ARM	NOT APPLICABLE	POLE MOUNTED	URBIS	AXIA 2 S1	WOODEN PO	WOOD	5	NOT APPLICABI	Not Applicable		
46102363	CAISTOR ROAD	Barnetby Le Wold Parish	507323.98	410492.21	7	7006	00205897	02/10/2018 00:00	3	1	GREATER THAN 50MPH	FRONT OF FOOTPATH	0	POST TOP	NOT APPLICABLE	RIGID COLUMN	URBIS	AXIA 2 S1	MALLATITE	TUBULAR STEEL	6	GALVANISED	TUBULAR		
46102363	CAISTOR ROAD	Barnetby Le Wold Parish	507325.64	410442.28	8	7007	00205898	02/10/2018 00:00	3	1	GREATER THAN 50MPH	VERGE	0	POST TOP	NOT APPLICABLE	RIGID COLUMN	URBIS	AXIA 2 S1	MALLATITE	TUBULAR STEEL	6	GALVANISED	TUBULAR		
46102363	CAISTOR ROAD	Barnetby Le Wold Parish	507333.22	410399.13	9	7008	00205899	01/04/1973 00:00	3	1	GREATER THAN 50MPH	ON POLE	500	SINGLE ARM	NOT APPLICABLE	POLE MOUNTED	URBIS	AXIA 2 S1	WOODEN PO	WOOD	5	NOT APPLICABI	Not Applicable		
46102375	ACCESS ROADS IN DISUSED AIRFIELD	Elsham Parish	504681.4	413013.57	1	7001	00202810	01/04/1981 00:00	6	1	LESS THAN 30MPH	VERGE	1500	SINGLE ARM	MID GREY	RIGID COLUMN	URBIS	AXIA 2 S1	PETITJEAN	SHEET STEEL	8	PAINTED	THAMES		
46102375	ACCESS ROADS IN DISUSED AIRFIELD	Elsham Parish	504685.25	413045.29	2	7002	00202811	01/04/1981 00:00	6	1	LESS THAN 30MPH	VERGE	1500	SINGLE ARM	MID GREY	RIGID COLUMN	URBIS	AXIA 2 S1	PETITJEAN	SHEET STEEL	8	PAINTED	THAMES		
46102375	ACCESS ROADS IN DISUSED AIRFIELD	Elsham Parish	504666.6	413068.24	3	7003	00202812	01/04/1981 00:00	6	1	LESS THAN 30MPH	VERGE	1500	SINGLE ARM	MID GREY	RIGID COLUMN	URBIS	AXIA 2 S1	PETITJEAN	SHEET STEEL	8	PAINTED	THAMES		
46102381	BEECHCROFT DRIVE	Kirton in Lindsey Parish	493304.01	399203.15	1	7001	04200715	27/06/2022 00:00	2	4	LESS THAN 30MPH	BACK OF FOOTPATH	NA	POST TOP	NOT APPLICABLE	RIGID COLUMN	URBIS	AXIA 2 S1	MALLATITE	TUBULAR STEEL	6	GALVANISED	MALLATITE		
46102381	BEECHCROFT DRIVE	Kirton in Lindsey Parish	493341.06	399210.84	2	7002	04200716	27/06/2022 00:00	2	4	LESS THAN 30MPH	BACK OF FOOTPATH	NA	POST TOP	NOT APPLICABLE	RIGID COLUMN	URBIS	AXIA 2 S1	MALLATITE	TUBULAR STEEL	6	GALVANISED	MALLATITE		
46102381	BEECHCROFT DRIVE	Kirton in Lindsey Parish	493379.26	399213.28	3	7003	04200717	27/06/2022 00:00	2	4	LESS THAN 30MPH	BACK OF FOOTPATH	NA	POST TOP	NOT APPLICABLE	RIGID COLUMN	URBIS	AXIA 2 S1	MALLATITE	TUBULAR STEEL	6	GALVANISED	MALLATITE		
46102381	BEECHCROFT DRIVE	Kirton in Lindsey Parish	493415.81	399215.23	4	7004	04200718	27/06/2022 00:00	2	4	LESS THAN 30MPH	BACK OF FOOTPATH	NA	POST TOP	NOT APPLICABLE	RIGID COLUMN	URBIS	AXIA 2 S1	MALLATITE	TUBULAR STEEL	6	GALVANISED	MALLATITE		
46102381	BEECHCROFT DRIVE	Kirton in Lindsey Parish	493453.58	399228.7	5	7005	04200719	27/06/2022 00:00	2	4	LESS THAN 30MPH	BACK OF FOOTPATH	NA	POST TOP	NOT APPLICABLE	RIGID COLUMN	URBIS	AXIA 2 S1	MALLATITE	TUBULAR STEEL	6	GALVANISED	MALLATITE		
46102381	BEECHCROFT DRIVE	Kirton in Lindsey Parish	493473.83	399230.47	6	7006	04200720	27/06/2022 00:00	2	4	LESS THAN 30MPH	BACK OF FOOTPATH	NA	POST TOP	NOT APPLICABLE	RIGID COLUMN	URBIS	AXIA 2 S1	MALLATITE	TUBULAR STEEL	6	GALVANISED	MALLATITE		
46102381	BEECHCROFT DRIVE	Kirton in Lindsey Parish	493480.24	399194.33	7	7007	04200721	27/06/2022 00:00	2	4	LESS THAN 30MPH	BACK OF FOOTPATH	NA	POST TOP	NOT APPLICABLE	RIGID COLUMN	URBIS	AXIA 2 S1	MALLATITE	TUBULAR STEEL	6	GALVANISED	MALLATITE		
46102381	BEECHCROFT DRIVE	Kirton in Lindsey Parish	493478	399166	8	7008	04200722	27/06/2022 00:00	2	4	LESS THAN 30MPH	BACK OF FOOTPATH	NA	POST TOP	NOT APPLICABLE	RIGID COLUMN	URBIS	AXIA 2 S1	MALLATITE	TUBULAR STEEL	6	GALVANISED	MALLATITE		
46102381	BEECHCROFT DRIVE	Kirton in Lindsey Parish	493461.62	399143.51	9	7009	04200723	27/06/2022 00:00	2	4	LESS THAN 30MPH	BACK OF FOOTPATH	NA	POST TOP	NOT APPLICABLE	RIGID COLUMN	URBIS	AXIA 2 S1	MALLATITE	TUBULAR STEEL	6	GALVANISED	MALLATITE		
46102387	FOOTPATH FROM BARROW ROAD CANBERRA VIEW	Barton upon Humber

46102464	LIBRARY SQUARE	Scunthorpe	489849.7	411473.92	9	7008	00203266	01/04/1980 00:00	4	4	NOT ON A ROAD	OTHER	800	TRIPLE ARM	BLUE	RIGID COLUMN	PHILIPS	HPP133	SCUN	CAST IRON	5	PAINTED	SPECIAL
46102470	LAKESIDE PARKWAY	Scunthorpe	491738.2	408586.72	1	7000	00203272	01/04/1992 00:00	3	2	LESS THAN 30MPH	BACK OF FOOTPATH	1250	SINGLE ARM	NOT APPLICABLE	RIGID COLUMN	URBIS	AXIA 2 S1	PETITJEAN	SHEET STEEL	8	GALVANISED	THAMES
46102470	LAKESIDE PARKWAY	Scunthorpe	491736.04	408348.41	10	7013	00203285	01/04/1992 00:00	3	2	LESS THAN 30MPH	BACK OF FOOTPATH	1250	SINGLE ARM	NOT APPLICABLE	RIGID COLUMN	URBIS	AXIA 2 S1	PETITJEAN	SHEET STEEL	10	GALVANISED	THAMES
46102470	LAKESIDE PARKWAY	Scunthorpe	491420	407865	10X	7047	00203319	01/04/2005 00:00	3	2	LESS THAN 30MPH	BACK OF FOOTPATH	1000	SINGLE ARM	NOT APPLICABLE	RIGID COLUMN	URBIS	AXIA 2 S1	VALMONT ST	SHEET STEEL	10	GALVANISED	THAMES
46102470	LAKESIDE PARKWAY	Scunthorpe	491735.35	408313.94	11	7014	00203286	01/04/1992 00:00	3	2	LESS THAN 30MPH	BACK OF FOOTPATH	1250	SINGLE ARM	NOT APPLICABLE	RIGID COLUMN	URBIS	AXIA 2 S1	PETITJEAN	SHEET STEEL	10	GALVANISED	THAMES
46102470	LAKESIDE PARKWAY	Scunthorpe	491413	407898	11X	7048	00203320	01/04/2005 00:00	3	2	LESS THAN 30MPH	BACK OF FOOTPATH	1000	SINGLE ARM	NOT APPLICABLE	RIGID COLUMN	URBIS	AXIA 2 S1	VALMONT ST	SHEET STEEL	10	GALVANISED	THAMES
46102470	LAKESIDE PARKWAY	Scunthorpe	491735.56	408283.66	12	7015	00203287	01/04/1992 00:00	3	2	LESS THAN 30MPH	BACK OF FOOTPATH	1250	SINGLE ARM	NOT APPLICABLE	RIGID COLUMN	URBIS	AXIA 2 S1	PETITJEAN	SHEET STEEL	10	GALVANISED	THAMES
46102470	LAKESIDE PARKWAY	Scunthorpe	491445	407900	12X	7049	00203321	01/04/2005 00:00	3	2	LESS THAN 30MPH	BACK OF FOOTPATH	1000	SINGLE ARM	NOT APPLICABLE	RIGID COLUMN	URBIS	AXIA 2 S1	VALMONT ST	SHEET STEEL	10	GALVANISED	THAMES
46102470	LAKESIDE PARKWAY	Scunthorpe	491735.32	408257.04	13	7016	00203288	01/04/1992 00:00	3	2	LESS THAN 30MPH	BACK OF FOOTPATH	1250	SINGLE ARM	NOT APPLICABLE	RIGID COLUMN	URBIS	AXIA 2 S1	PETITJEAN	SHEET STEEL	10	GALVANISED	THAMES
46102470	LAKESIDE PARKWAY	Scunthorpe	491732	408219	14	7017	00203289	01/04/2005 00:00	3	2	LESS THAN 30MPH	BACK OF FOOTPATH	1000	SINGLE ARM	NOT APPLICABLE	RIGID COLUMN	URBIS	AXIA 2 S1	VALMONT ST	SHEET STEEL	10	GALVANISED	THAMES
46102470	LAKESIDE PARKWAY	Scunthorpe	491747	408158	15	7018	00203290	01/04/2005 00:00	3	2	LESS THAN 30MPH	BACK OF FOOTPATH	1000	SINGLE ARM	NOT APPLICABLE	RIGID COLUMN	URBIS	AXIA 2 S1	VALMONT ST	SHEET STEEL	10	GALVANISED	THAMES
46102470	LAKESIDE PARKWAY	Scunthorpe	491736.5	408148.5	16	7019	00203291	01/04/2005 00:00	3	2	LESS THAN 30MPH	BACK OF FOOTPATH	1000	SINGLE ARM	NOT APPLICABLE	RIGID COLUMN	URBIS	AXIA 2 S1	VALMONT ST	SHEET STEEL	10	GALVANISED	THAMES
46102470	LAKESIDE PARKWAY	Scunthorpe	491726	408087	17	7020	00203292	01/04/2005 00:00	3	2	LESS THAN 30MPH	BACK OF FOOTPATH	1000	SINGLE ARM	NOT APPLICABLE	RIGID COLUMN	URBIS	AXIA 2 S1	VALMONT ST	SHEET STEEL	10	GALVANISED	THAMES
46102470	LAKESIDE PARKWAY	Scunthorpe	491725	408043	18	7021	00203293	01/04/2005 00:00	3	2	LESS THAN 30MPH	BACK OF FOOTPATH	1000	SINGLE ARM	NOT APPLICABLE	RIGID COLUMN	URBIS	AXIA 2 S1	VALMONT ST	SHEET STEEL	10	GALVANISED	THAMES
46102470	LAKESIDE PARKWAY	Scunthorpe	491701	408008	19	7022	00203294	01/04/2005 00:00	3	2	LESS THAN 30MPH	BACK OF FOOTPATH	1000	SINGLE ARM	NOT APPLICABLE	RIGID COLUMN	URBIS	AXIA 2 S1	VALMONT ST	SHEET STEEL	10	GALVANISED	THAMES
46102470	LAKESIDE PARKWAY	Scunthorpe	491753.23	408486.22	1BB	7001	00203273	01/04/2013 00:00	3	2	LESS THAN 30MPH	FRONT OF FOOTPATH	0	POST TOP	BLACKWHITE	RIGID COLUMN	WRTL	STELA WIDE 52 LED	MALLATITE	TUBULAR STEEL	6	GALVANISED	TUBULAR
46102470	LAKESIDE PARKWAY	Scunthorpe	491757	408202	1X	7038	00203310	01/04/2005 00:00	3	2	LESS THAN 30MPH	BACK OF FOOTPATH	1000	SINGLE ARM	NOT APPLICABLE	RIGID COLUMN	URBIS	AXIA 2 S1	VALMONT ST	SHEET STEEL	10	GALVANISED	THAMES
46102470	LAKESIDE PARKWAY	Scunthorpe	491744.7	408439.31	1Y	7050	00203322	01/04/1990 00:00	3	2	LESS THAN 30MPH	SPLITTER ISLAND	1250	SINGLE ARM	NOT APPLICABLE	RIGID COLUMN	URBIS	AXIA 2 S1	PETITJEAN	SHEET STEEL	10	GALVANISED	THAMES
46102470	LAKESIDE PARKWAY	Scunthorpe	491754.88	408584.49	2	7002	00203274	01/04/1992 00:00	3	2	LESS THAN 30MPH	BACK OF FOOTPATH	1250	SINGLE ARM	NOT APPLICABLE	RIGID COLUMN	URBIS	AXIA 2 S1	PETITJEAN	SHEET STEEL	10	GALVANISED	THAMES
46102470	LAKESIDE PARKWAY	Scunthorpe	491686	407988	20	7023	00203295	01/04/2005 00:00	3	2	LESS THAN 30MPH	BACK OF FOOTPATH	1000	SINGLE ARM	NOT APPLICABLE	RIGID COLUMN	URBIS	AXIA 2 S1	VALMONT ST	SHEET STEEL	10	GALVANISED	THAMES
46102470	LAKESIDE PARKWAY	Scunthorpe	491674	407921	21	7024	00203296	08/01/2021 00:00	3	2	LESS THAN 30MPH	BACK OF FOOTPATH	1000	SINGLE ARM	NOT APPLICABLE	RIGID COLUMN	URBIS	AXIA 2 S1	MALLATITE	TUBULAR STEEL	10	GALVANISED	TUBULAR
46102470	LAKESIDE PARKWAY	Scunthorpe	491646	407895	22	7025	00203297	01/04/2005 00:00	3	2	LESS THAN 30MPH	BACK OF FOOTPATH	1000	SINGLE ARM	NOT APPLICABLE	RIGID COLUMN	URBIS	AXIA 2 S1	VALMONT ST	SHEET STEEL	10	GALVANISED	THAMES
46102470	LAKESIDE PARKWAY	Scunthorpe	491610	407883	23	7026	00203298	01/04/2005 00:00	3	2	LESS THAN 30MPH	BACK OF FOOTPATH	1000	SINGLE ARM	NOT APPLICABLE	RIGID COLUMN	URBIS	AXIA 2 S1	VALMONT ST	SHEET STEEL	10	GALVANISED	THAMES
46102470	LAKESIDE PARKWAY	Scunthorpe	491576	407877	24	7027	00203299	01/04/2005 00:00	3	2	LESS THAN 30MPH	BACK OF FOOTPATH	1000	SINGLE ARM	NOT APPLICABLE	RIGID COLUMN	URBIS	AXIA 2 S1	VALMONT ST	SHEET STEEL	10	GALVANISED	THAMES
46102470	LAKESIDE PARKWAY	Scunthorpe	491535	407876	25	7028	00203300	01/04/2005 00:00	3	2	LESS THAN 30MPH	BACK OF FOOTPATH	1000	SINGLE ARM	NOT APPLICABLE	RIGID COLUMN	URBIS	AXIA 2 S1	VALMONT ST	SHEET STEEL	10	GALVANISED	THAMES
46102470	LAKESIDE PARKWAY	Scunthorpe	491500	407879	26	7029	00203301	01/04/2005 00:00	3	2	LESS THAN 30MPH	BACK OF FOOTPATH	1000	SINGLE ARM	NOT APPLICABLE	RIGID COLUMN	URBIS	AXIA 2 S1	VALMONT ST	SHEET STEEL	10	GALVANISED	THAMES
46102470	LAKESIDE PARKWAY	Scunthorpe	491462	407894	27	7030	00203302	01/04/2005 00:00	3	2	LESS THAN 30MPH	BACK OF FOOTPATH	1000	SINGLE ARM	NOT APPLICABLE	RIGID COLUMN	URBIS	AXIA 2 S1	VALMONT ST	SHEET STEEL	10	GALVANISED	THAMES
46102470	LAKESIDE PARKWAY	Scunthorpe	491401	407872	28	7031	00203303	06/12/2017 00:00	3	2	LESS THAN 30MPH	BACK OF FOOTPATH	1000	SINGLE ARM	NOT APPLICABLE	RIGID COLUMN	URBIS	AXIA 2 S1	VALMONT ST	SHEET STEEL	10	GALVANISED	THAMES
46102470	LAKESIDE PARKWAY	Scunthorpe	491360	407883	29	7032	00203304	01/04/2005 00:00	3	2	LESS THAN 30MPH	BACK OF FOOTPATH	1000	SINGLE ARM	NOT APPLICABLE	RIGID COLUMN	URBIS	AXIA 2 S1	VALMONT ST	SHEET STEEL	10	GALVANISED	THAMES
46102470	LAKESIDE PARKWAY	Scunthorpe	491742.87	408485.31	2BB	7003	00203275	01/04/2013 00:00	3	2	LESS THAN 30MPH	FRONT OF FOOTPATH	0	POST TOP	BLACKWHITE	RIGID COLUMN	WRTL	STELA WIDE 52 LED	MALLATITE	TUBULAR STEEL	6	GALVANISED	TUBULAR
46102470	LAKESIDE PARKWAY	Scunthorpe	491758	408175	2X	7039	00203311	01/04/2005 00:00	3	2	LESS THAN 30MPH	BACK OF FOOTPATH	1000	SINGLE ARM	NOT APPLICABLE	RIGID COLUMN	URBIS	AXIA 2 S1	VALMONT ST	SHEET STEEL	10	GALVANISED	THAMES
46102470	LAKESIDE PARKWAY	Scunthorpe	491760.71	408429.84	2Y	7051	00203323	01/04/1990 00:00	3	2	LESS THAN 30MPH	BACK OF FOOTPATH	1250	SINGLE ARM	NOT APPLICABLE	RIGID COLUMN	URBIS	AXIA 2 S1	PETITJEAN	SHEET STEEL	10	GALVANISED	THAMES
46102470	LAKESIDE PARKWAY	Scunthorpe	491753.38	408553.93	3	7004	00203276	01/04/1992 00:00	3	2	LESS THAN 30MPH	BACK OF FOOTPATH	1250	SINGLE ARM	NOT APPLICABLE	RIGID COLUMN	URBIS	AXIA 2 S1	PETITJEAN	SHEET STEEL	10	GALVANISED	THAMES
46102470	LAKESIDE PARKWAY	Scunthorpe	491319	407873	30	7033	00203305	01/04/2005 00:00	3	2	LESS THAN 30MPH	BACK OF FOOTPATH	1000	SINGLE ARM	NOT APPLICABLE	RIGID COLUMN	URBIS	AXIA 2 S1	VALMONT ST	SHEET STEEL	10	GALVANISED	THAMES
46102470	LAKESIDE PARKWAY	Scunthorpe	491286	407881	31	7034	00203306	01/04/2005 00:00	3	2	LESS THAN 30MPH	BACK OF FOOTPATH	1000	SINGLE ARM	NOT APPLICABLE	RIGID COLUMN	URBIS	AXIA 2 S1	VALMONT ST	SHEET STEEL	10	GALVANISED	THAMES
46102470	LAKESIDE PARKWAY	Scunthorpe	491252	407869	32	7035	00203307	01/04/2005 00:00	3	2	LESS THAN 30MPH	BACK OF FOOTPATH	1000	SINGLE ARM	NOT APPLICABLE	RIGID COLUMN	URBIS	AXIA 2 S1	VALMONT ST	SHEET STEEL	10	GALVANISED	THAMES
46102470	LAKESIDE PARKWAY	Scunthorpe	491217	407873	33	7036	00203308	01/04/2005 00:00	3	2	LESS THAN 30MPH	BACK OF FOOTPATH	1000	SINGLE ARM	NOT APPLICABLE	RIGID COLUMN	URBIS	AXIA 2 S1	VALMONT ST	SHEET STEEL	10	GALVANISED	THAMES
46102470	LAKESIDE PARKWAY	Scunthorpe	491179	407854	34	7037	00203309	01/04/2005 00:00	3	2	LESS THAN 30MPH	BACK OF FOOTPATH	1000	SINGLE ARM	NOT APPLICABLE	RIGID COLUMN	URBIS	AXIA 2 S1	VALMONT ST	SHEET STEEL	10	GALVANISED	THAMES
46102470	LAKESIDE PARKWAY	Scunthorpe	491159.3	407860.91	35	7058	00201446	01/04/1998 00:00	3	2	LESS THAN 30MPH	BACK OF FOOTPATH	1500	SINGLE ARM	NOT APPLICABLE	RIGID COLUMN	URBIS	AXIA 2 S1	PETITJEAN	SHEET STEEL	8	GALVANISED	THAMES
46102470	LAKESIDE PARKWAY	Scunthorpe	491737.6	408335.7	3BB	7005	00203277	01/04/2014 00:00	3	2	LESS THAN 30MPH	FRONT OF FOOTPATH	0	POST TOP	BLACKWHITE	RIGID COLUMN	WRTL	STELA WIDE 52 LED	MALLATITE	TUBULAR STEEL	6	GALVANISED	TUBULAR
46102470	LAKESIDE PARKWAY	Scunthorpe	491724	408174	3X	7040	00203312	01/04/2005 00:00	3	2	LESS THAN 30MPH	BACK OF FOOTPATH	1000	SINGLE ARM	NOT APPLICABLE	RIGID COLUMN	URBIS	AXIA 2 S1	VALMONT ST	SHEET STEEL	10	GALVANISED	THAMES
46102470	LAKESIDE PARKWAY	Scunthorpe	491763	408417.1	3Y	7052	00203324	01/04/1990 00:00	3	2	LESS THAN 30MPH	SPLITTER ISLAND	1250	SINGLE ARM	NOT APPLICABLE	RIGID COLUMN	URBIS	AXIA 2 S1	PETITJEAN	SHEET STEEL	10	GALVANISED	THAMES
46102470	LAKESIDE PARKWAY	Scunthorpe	491753.83	408523.78	4	7006	00203278	01/04/1992 00:00	3	2	LESS THAN 30MPH	BACK OF FOOTPATH	1250	SINGLE ARM	NOT APPLICABLE	RIGID COLUMN	URBIS	AXIA 2 S1	PETITJEAN	SHEET STEEL	10	GALVANISED	THAMES
46102470	LAKESIDE PARKWAY	Scunthorpe	491745.7	408335.7	4BB	7007	00203279	01/04/2014 00:00	3	2	LESS THAN 30MPH	FRONT OF FOOTPATH	0	POST TOP	BLACKWHITE	RIGID COLUMN	WRTL	STELA WIDE 52 LED	MALLATITE	TUBULAR STEEL	6	GALVANISED	TUBULAR
46102470	LAKESIDE PARKWAY	Scunthorpe	491726	408204	4X	7041	00203313	01/04/2005 00:00	3	2	LESS THAN 30MPH	BACK OF FOOTPATH	1000	SINGLE ARM	NOT APPLICABLE	RIGID COLUMN	URBIS	AXIA 2 S1	VALMONT ST	SHEET STEEL	10	GALVANISED	THAMES
46102470	LAKESIDE PARKWAY	Scunthorpe	491757.77	408403.06	4Y	7053	00203325	01/04/1990 00:00	3	2	LESS THAN 30MPH	BACK OF FOOTPATH	1250	SINGLE ARM	NOT APPLICABLE	RIGID COLUMN	URBIS	AXIA 2 S1	PETITJEAN	SHEET STEEL	10	GALVANISED	THAMES
46102470	LAKESIDE PARKWAY	Scunthorpe	491755.76	408491.97	5	7008	00203280	01/04/1992 00:00	3	2	LESS THAN 30MPH	BACK OF FOOTPATH	1250	SINGLE ARM	NOT APPLICABLE	RIGID COLUMN	URBIS	AXIA 2 S1	PETITJEAN	SHEET STEEL	10	GALVANISED	THAMES
46102470	LAKESIDE PARKWAY	Scunthorpe	491703	407967	5X	7042	00203314	01/04/2005 00:00	3	2	LESS THAN 30MPH	BACK OF FOOTPATH	1000	SINGLE ARM	NOT APPLICABLE	RIGID COLUMN	URBIS	AXIA 2 S1	VALMONT ST	SHEET STEEL	10	GALVANISED	THAMES
46102470	LAKESIDE PARKWAY	Scunthorpe	491743.07	408397.18	5Y	7054	00203326	01/04/1990 00:00	3	2	LESS THAN 30MPH	SPLITTER ISLAND	1250	SINGLE ARM	NOT APPLICABLE	RIGID COLUMN	URBIS	AXIA 2 S1	PETITJEAN	SHEET STEEL	10	GALVANISED	THAMES
46102470	LAKESIDE PARKWAY	Scunthorpe	491752.27	408466.48	6	7009	00203281	01/04/1992 00:00	3	2	LESS THAN 30MPH	BACK OF FOOTPATH	1250	SINGLE ARM	NOT APPLICABLE	RIGID COLUMN	URBIS	AXIA 2 S1	PETITJEAN	SHEET STEEL	10	GALVANISED	THAMES
46102470	LAKESIDE PARKWAY	Scunthorpe	491695	407939	6X	7043	00203315	01/04/2005 00:00	3	2	LESS THAN 30MPH	BACK OF FOOTPATH	1000	SINGLE ARM	NOT APPLICABLE	RIGID COLUMN	URBIS	AXIA 2 S1	VALMONT ST	SHEET STEEL	10	GALVANISED	THAMES
46102470	LAKESIDE PARKWAY	Scunthorpe	491727.72	408401.42	6Y	7055	00203327	01/04/1990 00:00	3	2	LESS THAN 30MPH	BACK OF FOOTPATH	1250	SINGLE ARM	NOT APPLICABLE	RIGID COLUMN	URBIS	AXIA 2 S1	PETITJEAN	SHEET STEEL	10	GALVANISED	THAMES
46102470	LAKESIDE PARKWAY	Scunthorpe	491737.34	408449.41	7	7010	00203282	01/04/1992 00:00	3	2	LESS THAN 30MPH	BACK OF FOOTPATH	800	SINGLE ARM	NOT APPLICABLE	RIGID COLUMN	URBIS	AXIA 2 S1	PETITJEAN	SHEET STEEL	10	GALVANISED	THAMES
46102470	LAKESIDE PARKWAY	Scunthorpe	491661	407952	7X	7044	00203316	01/04/2005 00:00	3	2	LESS THAN 30MPH	BACK OF FOOTPATH	1000	SINGLE ARM	NOT APPLICABLE	RIGID COLUMN	URBIS	AXIA 2 S1	VALMONT ST	SHEET STEEL	10	GALVANISED	THAMES
46102470	LAKESIDE PARKWAY	Scunthorpe	491721.15	408417.15	7Y	7056	00203328	01/04/1990 00:00	3	2	LESS THAN 30MPH	SPLITTER ISLAND	1250	SINGLE ARM	NOT APPLICABLE	RIGID COLUMN	URBIS	AXIA 2 S1	PETITJEAN	SHEET STEEL	10	GALVANISED	THAMES
46102470	LAKESIDE PARKWAY	Scunthorpe	491735.72	408384.56	8	7011	00203283	01/04/1992 00:00	3	2	LESS THAN 30MPH	BACK OF FOOTPATH	1250	SINGLE ARM	NOT APPLICABLE	RIGID COLUMN	URBIS	AXIA 2 S1	PETITJEAN	SHEET STEEL	10	GALVANISED	THAMES
46102470	LAKESIDE PARKWAY	Scunthorpe	491674	407978	8X	7045	00203317	01/04/2005 00:00	3	2	LESS THAN 30MPH	BACK OF FOOTPATH	1000	SINGLE ARM	NOT APPLICABLE	RIGID COLUMN	URBIS	AXIA 2 S1	VALMONT ST	SHEET STEEL	10	GALVANISED	THAMES
46102470	LAKESIDE PARKWAY	Scunthorpe	491726.09	408433.11	8Y	7057	00203329	01/04/1990 00:00	3	2	LESS THAN 30MPH	BACK OF FOOTPATH	1250	SINGLE ARM	NOT APPLICABLE	RIGID COLUMN	URBIS	AXIA 2 S1	PETITJEAN	SHEET STEEL	10	GALVANISED	THAMES
46102470	LAKESIDE PARKWAY	Scunthorpe	491748.91	408384.96	9	7012	00203284	01/04/1992 00:00	3	2	LESS THAN 30MPH	BACK OF FOOTPATH	1250	SINGLE ARM	NOT APPLICABLE	RIGID COLUMN	URBIS	AXIA 2 S1	PETITJEAN	SHEET STEEL	10	GALVANISED	THAMES
46102470	LAKESIDE PARKWAY	Scunthorpe	491449	407872	9X	7046	00203318	01/04/2005 00:00	3	2	LESS THAN 30MPH	BACK OF FOOTPATH	1000	SINGLE ARM	NOT APPLICABLE	RIGID COLUMN	URBIS	AXIA 2 S1	VALMONT ST	SHEET STEEL	10	GALVANISED	THAMES
46102472	LAKESIDE RETAIL PARK	Scunthorpe	491707.71	408411.58	1	7000	00203330	01/04/1992 00:00	3	2	LESS THAN 30MPH	BACK OF FOOTPATH	1250	SINGLE ARM	NOT APPLICABLE	RIGID COLUMN	URBIS	AXIA 2 S1	PETITJEAN	SHEET STEEL	8	GALVANISED	THAMES
46102472	LAKESIDE RETAIL PARK	Scunthorpe	491708.2	408424.64	2	7001	00203331	01/04/1992 00:00	3	2	LESS THAN 30MPH	BACK OF FOOTPATH	1250	SINGLE ARM	NOT APPLICABLE	RIGID COLUMN	URBIS	AXIA 2 S1	PETITJEAN	SHEET STEEL	8	GALVANISED	THAMES
46102472	LAKESIDE RETAIL PARK	Scunthorpe	491676.38	408413.49	3	7002	00203332	01/04/1992 00:00	3	2	LESS THAN 30MPH	BACK OF FOOTPATH	1250	SINGLE ARM	NOT APPLICABLE	RIGID COLUMN	URBIS	AXIA 2 S1	PETITJEAN	SHEET STEEL	8	GALVANISED	THAMES
46102472	LAKESIDE RETAIL PARK	Scunthorpe	491648.3	408424.53	4	7003	00203333	01/04/1992 00:00	3	2	LESS THAN 30MPH	BACK OF FOOTPATH	1250	SINGLE ARM	NOT APPLICABLE	RIGID COLUMN	URBIS	AXIA 2 S1	PETITJEAN	SHEET STEEL	8	GALVANISED	THAMES
46102472	LAKESIDE RETAIL PARK	Scunthorpe	491620.81	408424.57	5	7004	00203334	01/04/1992 00:00	3	2	LESS THAN 30MPH	BACK OF FOOTPATH	1250	SINGLE ARM	NOT APPLICABLE	RIGID COLUMN	URBIS	AXIA 2 S1	PETITJEAN	SHEET STEEL	8	GALVANISED	THAMES
46102472	LAKESIDE RETAIL PARK	Scunthorpe	491607.93	408413.56	6	7005	00203335	01/04/1992 00:00	3	2	LESS THAN 30MPH	BACK OF FOOTPATH	1250	SINGLE ARM	NOT APPLICABLE	RIGID COLUMN	URBIS	AXIA 2 S1	PETITJEAN	SHEET STEEL	8	GALVANISED	THAMES
46102478	HOLLAND AVENUE	Crowle Parish	477590.6	413035.4	1	7000	00203336	01/04/2001 00:00	5	1	LESS THAN 30MPH	BACK OF FOOTPATH	0	POST TOP	NOT APPLICABLE	RIGID COLUMN	URBIS	AXIA 2 S1	MALLATITE	TUBULAR STEEL	6	GALVANISED	STEPPED TUBULAR
46102478	HOLLAND AVENUE	Crowle Parish	477622.56	413037.81	2	7001	00203337	01/04/2001 00:00	5	1	LESS THAN 30MPH	BACK OF FOOTPATH	0	POST TOP	NOT APPLICABLE	RIGID COLUMN	URBIS	AXIA 2 S1	MALLATITE	TUBULAR STEEL	6	GALVANISED	STEPPED TUBULAR
46102478	HOLLAND AVENUE	Crowle Parish	477656.8	413050.32	3	7002	00203338	01/04/2001 00:00	5	1	LESS THAN 30MPH	BACK OF FOOTPATH	0	POST TOP	NOT APPLICABLE	RIGID COLUMN	URBIS	AXIA 2 S1	MALLATITE	TUBULAR STEEL	6	GALVANISED	STEPPED TUBULAR
46102478	HOLLAND AVENUE	Crowle Parish	477679.38	413044.94	4	7003	00203339	01/04/2001 00:00	5	1	LESS THAN 30MPH	BACK OF FOOTPATH	0	POST TOP	NOT APPLICABLE	RIGID COLUMN	URBIS	AXIA 2 S1	MALLATITE	TUBULAR STEEL	6	GALVANISED	STEPPED TUBULAR
46102479	CRANIDGE CLOSE	Crowle Parish	477332	413327	1	7002	04200139	01/04/2010 00:00	5	1	LESS THAN 30MPH	BACK OF FOOTPATH	0	POST TOP	NOT APPLICABLE	RIGID COLUMN	URBIS	AXIA 2 S1	MALLATITE	TUBULAR STEEL	6	GALVANISED	TUBULAR
46102479	CRANIDGE CLOSE	Crowle Parish	477299.74	413317.9	2	7000	00203340	01/04/1980 00:00	5	1	LESS THAN 30MPH	BACK OF FOOTPATH	0	POST TOP	NOT APPLICABLE	RIGID COLUMN	URBIS	AXIA 2 S1	T AND L	TUBULAR STEEL	5	GALVANISED	STEPPED TUBULAR
46102479	CRANIDGE CLOSE	Crowle Parish	477264.1	413307.81	3	7001	00203341	01/04/2010 00:00	5	1	LESS THAN 30MPH	BACK OF FOOTPATH	0	POST TOP	NOT APPLICABLE	RIGID COLUMN	URBIS	AXIA 2 S1	MALLATITE	TUBULAR STEEL	6	GALVANISED	TUBULAR
46102480	WESTFIELD GARTH	Crowle Parish	478348.38	411431.1	1	7000	00203342	01/04/2000 00:00	5	1	LESS THAN 30MPH	VERGE	0	POST TOP	NOT APPLICABLE	RIGID COLUMN	URBIS	AXIA 2 S1	PETITJEAN	TUBULAR STEEL	5	GALVANISED	METRO
46102480	WESTFIELD GARTH	Crowle Parish	478374.93	411444.77	2	7001	00203343	01/04/2000 00:00	5	1	LESS THAN 30MPH	VERGE	0	POST TOP	NOT APPLICABLE	RIGID COLUMN	URBIS	AXIA 2 S1	PETITJEAN	TUBULAR STEEL	5	GALVANISED	METRO
46102480	WESTFIELD GARTH	Crowle Parish	478374.93	411466.54	3	7002	00203344	01/04/2000 00:00	5	1	LESS THAN 30MPH	VERGE	0	POST TOP	NOT APPLICABLE	RIGID COLUMN	URBIS	AXIA 2 S1	PETITJEAN	TUBULAR STEEL	5	GALVANISED	METRO
46102480	WESTFIELD GARTH	Crowle Parish	478375.29	411489.57	4	7003	00203345	01/04/2000 00:00	5	1	LESS THAN 30MPH	VERGE	0	POST TOP	NOT APPLICABLE	RIGID COLUMN	URBIS	AXIA 2 S1	PETITJEAN	TUBULAR STEEL	5	GALVANISED	METRO
46102480	WESTFIELD GARTH	Crowle Parish	478348.62	411513.41	5	7004	00203346	01/04/2000 00:00	5	1	LESS THAN 30MPH	VERGE	0	POST TOP	NOT APPLICABLE	RIGID COLUMN	URBIS	AXIA 2 S1	PETITJEAN	TUBULAR STEEL	5	GALVANISED	METRO
46102480	WESTFIELD GARTH	Crowle Parish	478395.06	411467.44	6	7005	00203347	01/04/2000 00:00	5	1	LESS THAN 30MPH	VERGE	0	POST TOP	NOT APPLICABLE	RIGID COLUMN	URBIS	AXIA 2 S1	PETITJEAN	TUBULAR STEEL	5	GALVANISED	METRO
46102480	WESTFIELD GARTH	Crowle Parish	478416.38	411458.67	7	7006	00203348	01/04/2000 00:00	5	1	LESS THAN 30MPH	VERGE	0	POST TOP	NOT APPLICABLE	RIGID COLUMN	URBIS	AXIA 2 S1	PETITJEAN	TUBULAR STEEL	5	GALVANISED	METRO
46102480	WESTFIELD GARTH	Crowle Parish	478425.23	411493.6	8	7007	00203349	01/04/2000 00:00	5	1	LESS THAN 30MPH	VERGE	0	POST TOP	NOT APPLICABLE	RIGID COLUMN	URBIS	AXIA 2 S1	PETITJEAN	TUBULAR STEEL	5	GALVANISED	METRO
46102480	WESTFIELD GARTH	Crowle Parish	478442.23	411506.83	9	7008	00203350	01/04/2000 00:00	5	1	LESS THAN 30MPH	VERGE	0	POST TOP	NOT APPLICABLE	RIGID COLUMN	URBIS	AXIA 2 S1	PETITJEAN	TUBULAR STEEL	5	GALVANISED	METRO
46102485	CLARENCE COURT	Scunthorpe	488839	408992	1	7001	04200688	10/04/2021 00:00	2	4	LESS THAN 30MPH	BACK OF FOOTPATH	NA	POST TOP	NOT APPLICABLE	RIGID COLUMN	URBIS	AXIA 2 S1	MALLATITE	TUBULAR STEEL	6	GALVANISED	MALLATITE
46102485	CLARENCE COURT	Scunthorpe	488840	408953	2	7002	04200689	10/04/2021 00:00	2	4	LESS THAN 30MPH	BACK OF FOOTPATH	NA	POST TOP	NOT APPLICABLE	RIGID COLUMN	URBIS	AXIA 2 S1	MALLATITE	TUBULAR STEEL	6	GALVANISED	MALLATITE
46102485	CLARENCE COURT	Scunthorpe	488804.02	408927.18	3	7003	04200690	10/04/2021 00:00	2	4	LESS THAN 30MPH	BACK OF FOOTPATH	NA	POST TOP	NOT APPLICABLE	RIGID COLUMN	URBIS	AXIA 2 S1	MALLATITE	TUBULAR STEEL	6	GALVANISED	MALLATITE
46102485	CLARENCE COURT	Scunthorpe	488839.88	408931.68	4	7004	04200691		2	4	LESS THAN 30MPH	BACK OF FOOTPATH	NA	POST TOP	NOT APPLICABLE	RIGID COLUMN	URBIS	AXIA 2

46102918	STATION ROAD	Garthorpe and Fockerby Parish	484759.43	419023.36	7	7006	00203466	01/04/1988 00:00	6	1	LESS THAN 30MPH	VERGE	0	POST TOP	NOT APPLICABLE	RIGID COLUMN	URBIS	AXIA 2 S1	FABRIKAT	TUBULAR STEEL	5	GALVANISED	5M01A
46102918	STATION ROAD	Garthorpe and Fockerby Parish	484737.56	418995.41	8	7007	00203467	01/04/1988 00:00	6	1	LESS THAN 30MPH	VERGE	0	POST TOP	NOT APPLICABLE	RIGID COLUMN	URBIS	AXIA 2 S1	FABRIKAT	TUBULAR STEEL	5	GALVANISED	5M01A
46102918	STATION ROAD	Garthorpe and Fockerby Parish	484705.68	418983.12	9	7008	00203468	01/04/1988 00:00	6	1	LESS THAN 30MPH	VERGE	0	POST TOP	NOT APPLICABLE	RIGID COLUMN	URBIS	AXIA 2 S1	PETITJEAN	SHEET STEEL	5	GALVANISED	NIDD
46102925	ACCESS ROAD TO RECREATION GROUND OFF STA	Owston Ferry Parish	480895	400149	1H	7001	04200309	16/12/2022 00:00	6	2	NOT ON A ROAD	VERGE	0	POST TOP	NOT APPLICABLE	RIGID COLUMN	URBIS	AXIA 2 S1	MALLATITE	TUBULAR STEEL	6	GALVANISED	TUBULAR
46102925	ACCESS ROAD TO RECREATION GROUND OFF STA	Owston Ferry Parish	480914.98	400122.69	2H	7002	04200310	16/12/2022 00:00	6	2	NOT ON A ROAD	VERGE	0	POST TOP	NOT APPLICABLE	RIGID COLUMN	URBIS	AXIA 2 S1	MALLATITE	TUBULAR STEEL	6	GALVANISED	TUBULAR
46102925	ACCESS ROAD TO RECREATION GROUND OFF STA	Owston Ferry Parish	480926.92	400141.31	3H	7003	04200667	23/12/2022 00:00	6	2	LESS THAN 30MPH	BACK OF FOOTPATH	0	POST TOP	NOT APPLICABLE	RIGID COLUMN	URBIS	AXIA 2 S1	MALLATITE	TUBULAR STEEL	6	GALVANISED	TUBULAR
46102933	ACCESS ROAD TO HOP CLOSE VILLAS	Keadby with Althorpe Parish	483207.77	409778.45	1	7000	00203481	01/04/1987 00:00	4	3	LESS THAN 30MPH	VERGE	300	SINGLE ARM	MID GREY	RIGID COLUMN	URBIS	AXIA 2 S1	PETITJEAN	SHEET STEEL	5	PAINTED	DAER
46102933	ACCESS ROAD TO HOP CLOSE VILLAS	Keadby with Althorpe Parish	483175.51	409783.83	2	7001	00203482	01/04/1987 00:00	4	3	LESS THAN 30MPH	VERGE	300	SINGLE ARM	MID GREY	RIGID COLUMN	URBIS	AXIA 2 S1	PETITJEAN	SHEET STEEL	5	PAINTED	DAER
46102934	VERMUYDEN COURT	Keadby with Althorpe Parish	483240.41	409467.47	1	7000	00203486	01/04/1988 00:00	4	3	LESS THAN 30MPH	VERGE	0	POST TOP	MID GREY	RIGID COLUMN	URBIS	AXIA 2 S1	OTHER	SHEET STEEL	5	PAINTED	OTHER
46102934	VERMUYDEN COURT	Keadby with Althorpe Parish	483242.57	409498.55	2	7001	00203487	01/04/1988 00:00	4	3	LESS THAN 30MPH	VERGE	0	POST TOP	MID GREY	RIGID COLUMN	URBIS	AXIA 2 S1	OTHER	SHEET STEEL	5	PAINTED	OTHER
46102951	CHURCH SIDE	Belton Parish	478256.16	406337.17	1	7000	00203488	01/04/1993 00:00	5	3	LESS THAN 30MPH	BACK OF FOOTPATH	300	SINGLE ARM	NOT APPLICABLE	RIGID COLUMN	URBIS	AXIA 2 S1	PETITJEAN	SHEET STEEL	5	GALVANISED	DAER
46102951	CHURCH SIDE	Belton Parish	478249.55	406360.77	2	7001	00203489	01/04/1993 00:00	5	3	LESS THAN 30MPH	BACK OF FOOTPATH	300	SINGLE ARM	NOT APPLICABLE	RIGID COLUMN	URBIS	AXIA 2 S1	PETITJEAN	SHEET STEEL	5	GALVANISED	DAER
46102951	CHURCH SIDE	Belton Parish	478245.25	406379.58	3	7002	00203490	01/04/1993 00:00	5	3	LESS THAN 30MPH	BACK OF FOOTPATH	300	SINGLE ARM	NOT APPLICABLE	RIGID COLUMN	URBIS	AXIA 2 S1	PETITJEAN	SHEET STEEL	5	GALVANISED	DAER
46102953	THE FURLONG	Belton Parish	478089.06	406236.39	1	7000	00203491	29/11/2024 00:00	5	3	LESS THAN 30MPH	VERGE	300	SINGLE ARM	NOT APPLICABLE	RIGID COLUMN	URBIS	AXIA 2 S1	MALLATITE	TUBULAR STEEL	6	GALVANISED	TUBULAR
46102953	THE FURLONG	Belton Parish	478089.05	406269.39	2	7001	00203492	01/04/1993 00:00	5	3	LESS THAN 30MPH	VERGE	300	SINGLE ARM	NOT APPLICABLE	RIGID COLUMN	URBIS	AXIA 2 S1	PETITJEAN	SHEET STEEL	5	GALVANISED	DAER
46102953	THE FURLONG	Belton Parish	478102.01	406293.26	3	7002	00203493	01/04/1993 00:00	5	3	LESS THAN 30MPH	VERGE	300	SINGLE ARM	NOT APPLICABLE	RIGID COLUMN	URBIS	AXIA 2 S1	PETITJEAN	SHEET STEEL	5	GALVANISED	DAER
46102953	THE FURLONG	Belton Parish	478091.62	406330.76	4	7003	00203494	01/04/1993 00:00	5	3	LESS THAN 30MPH	VERGE	300	SINGLE ARM	NOT APPLICABLE	RIGID COLUMN	URBIS	AXIA 2 S1	PETITJEAN	SHEET STEEL	5	GALVANISED	DAER
46102954	JEFFREY LANE	Belton Parish	478508.25	406869.81	1	7000	00203495	26/03/2020 00:00	5	3	LESS THAN 30MPH	VERGE	0	POST TOP	NOT APPLICABLE	RIGID COLUMN	URBIS	AXIA 2 S1	MALLATITE	TUBULAR STEEL	6	GALVANISED	TUBULAR
46102954	JEFFREY LANE	Belton Parish	478725.7	406836.03	10	7008	00203503	10/07/2018 00:00	5	3	LESS THAN 30MPH	BACK OF FOOTPATH	0	POST TOP	NOT APPLICABLE	RIGID COLUMN	URBIS	AXIA 2 S1	MALLATITE	TUBULAR STEEL	6	GALVANISED	TUBULAR
46102954	JEFFREY LANE	Belton Parish	478759.28	406819.62	11	7009	00203504	10/07/2018 00:00	5	3	LESS THAN 30MPH	BACK OF FOOTPATH	0	POST TOP	NOT APPLICABLE	RIGID COLUMN	URBIS	AXIA 2 S1	MALLATITE	TUBULAR STEEL	6	GALVANISED	TUBULAR
46102954	JEFFREY LANE	Belton Parish	478794.18	406821.01	12	7010	00203505	10/07/2018 00:00	5	3	LESS THAN 30MPH	BACK OF FOOTPATH	0	POST TOP	NOT APPLICABLE	RIGID COLUMN	URBIS	AXIA 2 S1	MALLATITE	TUBULAR STEEL	6	GALVANISED	TUBULAR
46102954	JEFFREY LANE	Belton Parish	478840.13	406807.74	13	7011	00203506	10/07/2018 00:00	5	3	LESS THAN 30MPH	BACK OF FOOTPATH	0	POST TOP	NOT APPLICABLE	RIGID COLUMN	URBIS	AXIA 2 S1	MALLATITE	TUBULAR STEEL	6	GALVANISED	TUBULAR
46102954	JEFFREY LANE	Belton Parish	478888	406823.93	14	7012	00203507	01/04/2013 00:00	5	3	LESS THAN 30MPH	VERGE	0	POST TOP	NOT APPLICABLE	RIGID COLUMN	URBIS	AXIA 2 S1	MALLATITE	TUBULAR STEEL	6	NOT APPLICABI	TUBULAR
46102954	JEFFREY LANE	Belton Parish	478925.46	406859.67	15	7013	00203508	01/04/2013 00:00	5	3	LESS THAN 30MPH	VERGE	0	POST TOP	NOT APPLICABLE	RIGID COLUMN	URBIS	AXIA 2 S1	MALLATITE	TUBULAR STEEL	6	NOT APPLICABI	TUBULAR
46102954	JEFFREY LANE	Belton Parish	478956.02	406888.86	16	7014	00203509	01/04/2013 00:00	5	3	LESS THAN 30MPH	VERGE	0	POST TOP	NOT APPLICABLE	RIGID COLUMN	URBIS	AXIA 2 S1	MALLATITE	TUBULAR STEEL	6	NOT APPLICABI	TUBULAR
46102954	JEFFREY LANE	Belton Parish	478545.13	406854.93	2	7001	00203496	10/07/2018 00:00	5	3	LESS THAN 30MPH	BACK OF FOOTPATH	0	POST TOP	NOT APPLICABLE	RIGID COLUMN	URBIS	AXIA 2 S1	MALLATITE	TUBULAR STEEL	6	GALVANISED	TUBULAR
46102954	JEFFREY LANE	Belton Parish	478575.23	406862.34	3	7002	00203497	10/07/2018 00:00	5	3	LESS THAN 30MPH	BACK OF FOOTPATH	0	POST TOP	NOT APPLICABLE	RIGID COLUMN	URBIS	AXIA 2 S1	MALLATITE	TUBULAR STEEL	6	GALVANISED	TUBULAR
46102954	JEFFREY LANE	Belton Parish	478602.59	406867.36	4	7003	00203498	10/07/2018 00:00	5	3	LESS THAN 30MPH	BACK OF FOOTPATH	0	POST TOP	NOT APPLICABLE	RIGID COLUMN	URBIS	AXIA 2 S1	MALLATITE	TUBULAR STEEL	6	GALVANISED	TUBULAR
46102954	JEFFREY LANE	Belton Parish	478615.17	406902.4	5	7004	00203499	10/07/2018 00:00	5	3	LESS THAN 30MPH	BACK OF FOOTPATH	0	POST TOP	NOT APPLICABLE	RIGID COLUMN	URBIS	AXIA 2 S1	MALLATITE	TUBULAR STEEL	6	GALVANISED	TUBULAR
46102954	JEFFREY LANE	Belton Parish	478613.05	406847.79	6	7005	00203500	01/04/1985 00:00	5	3	LESS THAN 30MPH	BACK OF FOOTPATH	300	SINGLE ARM	NOT APPLICABLE	RIGID COLUMN	URBIS	AXIA 2 S1	PETITJEAN	SHEET STEEL	5	GALVANISED	DAER
46102954	JEFFREY LANE	Belton Parish	478634	406821	7	7015	04200167	18/09/2018 00:00	5	3	LESS THAN 30MPH	BACK OF FOOTPATH	0	POST TOP	NOT APPLICABLE	RIGID COLUMN	URBIS	AXIA 2 S1	MALLATITE	TUBULAR STEEL	6	GALVANISED	TUBULAR
46102954	JEFFREY LANE	Belton Parish	478638.65	406854.3	8	7006	00203501	10/07/2018 00:00	5	3	LESS THAN 30MPH	BACK OF FOOTPATH	0	POST TOP	NOT APPLICABLE	RIGID COLUMN	URBIS	AXIA 2 S1	MALLATITE	TUBULAR STEEL	6	GALVANISED	TUBULAR
46102954	JEFFREY LANE	Belton Parish	478679.83	406846.85	9	7007	00203502	10/07/2018 00:00	5	3	LESS THAN 30MPH	BACK OF FOOTPATH	0	POST TOP	NOT APPLICABLE	RIGID COLUMN	URBIS	AXIA 2 S1	MALLATITE	TUBULAR STEEL	6	GALVANISED	TUBULAR
46102960	TURBARY ROAD	Epworth Parish	475996.1	403562.9	1	7000	00204586	01/08/2017 00:00	5	3	LESS THAN 30MPH	VERGE	0	POST TOP	NOT APPLICABLE	RIGID COLUMN	HOLOPHANE	VMAX V1 L024	MALLATITE	TUBULAR STEEL	6	GALVANISED	TUBULAR
46102960	TURBARY ROAD	Epworth Parish	476075.64	403543.14	2	7001	00204587	01/08/2017 00:00	5	3	LESS THAN 30MPH	VERGE	0	POST TOP	NOT APPLICABLE	RIGID COLUMN	HOLOPHANE	VMAX V1 L024	MALLATITE	TUBULAR STEEL	6	GALVANISED	TUBULAR
46102960	TURBARY ROAD	Epworth Parish	476153.8	403526.3	3	7002	00204588	01/08/2017 00:00	5	3	LESS THAN 30MPH	VERGE	0	POST TOP	NOT APPLICABLE	RIGID COLUMN	HOLOPHANE	VMAX V1 L024	MALLATITE	TUBULAR STEEL	6	GALVANISED	TUBULAR
46102960	TURBARY ROAD	Epworth Parish	476241.57	403506.07	4	7003	00204589	01/08/2017 00:00	5	3	LESS THAN 30MPH	VERGE	0	POST TOP	NOT APPLICABLE	RIGID COLUMN	HOLOPHANE	VMAX V1 L024	MALLATITE	TUBULAR STEEL	6	GALVANISED	TUBULAR
46102960	TURBARY ROAD	Epworth Parish	476339.74	403483.43	5	7004	00204590	01/08/2017 00:00	5	3	LESS THAN 30MPH	VERGE	0	POST TOP	NOT APPLICABLE	RIGID COLUMN	HOLOPHANE	VMAX V1 L024	MALLATITE	TUBULAR STEEL	6	GALVANISED	TUBULAR
46102960	TURBARY ROAD	Epworth Parish	476397.68	403470.15	6	7005	00204591	01/08/2017 00:00	5	3	LESS THAN 30MPH	VERGE	0	POST TOP	NOT APPLICABLE	RIGID COLUMN	HOLOPHANE	VMAX V1 L024	MALLATITE	TUBULAR STEEL	6	GALVANISED	TUBULAR
46102976	OLD ROUTE OF A161 NEAR WOODHOUSE LANE	Belton Parish	478458.09	408230.52	2	7001	00188437	01/04/1980 00:00	5	3	GREATER THAN 50MPH	VERGE	500	SINGLE ARM	MID GREY	RIGID COLUMN	URBIS	AXIA 2 S1	BRITISH STEI	TUBULAR STEEL	4	PAINTED	OTHER
46102976	OLD ROUTE OF A161 NEAR WOODHOUSE LANE	Belton Parish	478466.69	408189.12	3	7002	00188438	01/04/1980 00:00	5	3	GREATER THAN 50MPH	VERGE	500	SINGLE ARM	MID GREY	RIGID COLUMN	URBIS	AXIA 2 S1	BRITISH STEI	TUBULAR STEEL	4	PAINTED	OTHER
46102976	OLD ROUTE OF A161 NEAR WOODHOUSE LANE	Belton Parish	478461.88	408148.62	4	7003	00188439	01/04/2016 00:00	5	3	GREATER THAN 50MPH	ON POLE	300	SINGLE ARM	NOT APPLICABLE	POLE MOUNTED	URBIS	AXIA 2 S1	WOODEN PO	WOOD	4	NOT APPLICABI	Not Applicable
46102976	OLD ROUTE OF A161 NEAR WOODHOUSE LANE	Belton Parish	478438.76	408120.13	5	7004	00188440	01/04/2016 00:00	5	3	GREATER THAN 50MPH	ON POLE	300	SINGLE ARM	NOT APPLICABLE	POLE MOUNTED	URBIS	AXIA 2 S1	WOODEN PO	WOOD	4	NOT APPLICABI	Not Applicable
46102976	OLD ROUTE OF A161 NEAR WOODHOUSE LANE	Belton Parish	478412.95	408084.65	6	7005	00188441	01/04/1975 00:00	5	3	GREATER THAN 50MPH	ON POLE	800	SINGLE ARM	NOT APPLICABLE	POLE MOUNTED	URBIS	AXIA 2 S1	WOODEN PO	WOOD	4	NOT APPLICABI	Not Applicable
46103000	THORNTON LANE	Ulceby Parish	510573.04	415216.98	1	7000	00203510	01/04/2016 00:00	3	1	LESS THAN 30MPH	VERGE	0	POST TOP	NOT APPLICABLE	RIGID COLUMN	URBIS	AXIA 2 S1	MALLATITE	TUBULAR STEEL	6	GALVANISED	TUBULAR
46103000	THORNTON LANE	Ulceby Parish	510590.52	415241.44	2	7001	00203511	01/04/2016 00:00	3	1	LESS THAN 30MPH	VERGE	0	POST TOP	NOT APPLICABLE	RIGID COLUMN	URBIS	AXIA 2 S1	MALLATITE	TUBULAR STEEL	6	GALVANISED	TUBULAR
46103000	THORNTON LANE	Ulceby Parish	510614.07	415263.56	3	7002	00203512	01/04/2016 00:00	3	1	LESS THAN 30MPH	VERGE	0	POST TOP	NOT APPLICABLE	RIGID COLUMN	URBIS	AXIA 2 S1	MALLATITE	TUBULAR STEEL	6	GALVANISED	TUBULAR
46103000	THORNTON LANE	Ulceby Parish	510637.72	415285.87	4	7003	00203513	01/04/2010 00:00	3	1	LESS THAN 30MPH	VERGE	0	POST TOP	NOT APPLICABLE	RIGID COLUMN	URBIS	AXIA 2 S1	MALLATITE	TUBULAR STEEL	6	GALVANISED	TUBULAR
46103004	HERON HOLT	Broughton Parish	495930.93	409414.11	1	7000	00203514	01/04/1993 00:00	1	1	LESS THAN 30MPH	VERGE	0	POST TOP	NOT APPLICABLE	RIGID COLUMN	URBIS	AXIA 2 S1	PETITJEAN	SHEET STEEL	5	GALVANISED	NIDD
46103004	HERON HOLT	Broughton Parish	495925.42	409383.23	2	7001	00203515	01/04/1993 00:00	1	1	LESS THAN 30MPH	VERGE	0	POST TOP	NOT APPLICABLE	RIGID COLUMN	URBIS	AXIA 2 S1	PETITJEAN	SHEET STEEL	5	GALVANISED	NIDD
46103004	HERON HOLT	Broughton Parish	495937.73	409367.58	3	7002	00203516	01/04/1993 00:00	1	1	LESS THAN 30MPH	VERGE	0	POST TOP	NOT APPLICABLE	RIGID COLUMN	URBIS	AXIA 2 S1	PETITJEAN	SHEET STEEL	5	GALVANISED	NIDD
46103049	UNNAMED CLOSE STARTING AT 19 ASHDOWN AVE	Scunthorpe	488431.18	411766.54	5	7000	00196314	01/04/1993 00:00	6	3	LESS THAN 30MPH	VERGE	0	POST TOP	NOT APPLICABLE	RIGID COLUMN	URBIS	AXIA 2 S1	PETITJEAN	SHEET STEEL	6	GALVANISED	THAMES
46103049	UNNAMED CLOSE STARTING AT 19 ASHDOWN AVE	Scunthorpe	488426.3	411793.8	6	7001	00196315	01/04/1993 00:00	6	3	LESS THAN 30MPH	VERGE	0	POST TOP	NOT APPLICABLE	RIGID COLUMN	URBIS	AXIA 2 S1	PETITJEAN	SHEET STEEL	6	GALVANISED	THAMES
46103049	UNNAMED CLOSE STARTING AT 19 ASHDOWN AVE	Scunthorpe	488422.93	411817.71	7	7002	00196316	01/04/1993 00:00	6	3	LESS THAN 30MPH	VERGE	0	POST TOP	NOT APPLICABLE	RIGID COLUMN	URBIS	AXIA 2 S1	PETITJEAN	SHEET STEEL	6	GALVANISED	THAMES
46103052	UNNAMED CLOSE STARTING AT 23 ASHDOWN AVE	Scunthorpe	488450.48	411648.16	1	7000	00196310	01/04/1993 00:00	6	3	LESS THAN 30MPH	BACK OF FOOTPATH	0	POST TOP	NOT APPLICABLE	RIGID COLUMN	URBIS	AXIA 2 S1	PETITJEAN	SHEET STEEL	6	GALVANISED	THAMES
46103052	UNNAMED CLOSE STARTING AT 23 ASHDOWN AVE	Scunthorpe	488444.44	411678.91	2	7001	00196311	01/04/1993 00:00	6	3	LESS THAN 30MPH	VERGE	0	POST TOP	NOT APPLICABLE	RIGID COLUMN	URBIS	AXIA 2 S1	PETITJEAN	SHEET STEEL	6	GALVANISED	THAMES
46103052	UNNAMED CLOSE STARTING AT 23 ASHDOWN AVE	Scunthorpe	488432.23	411690.05	3	7002	00196312	01/04/1993 00:00	6	3	LESS THAN 30MPH	VERGE	0	POST TOP	NOT APPLICABLE	RIGID COLUMN	URBIS	AXIA 2 S1	PETITJEAN	SHEET STEEL	6	GALVANISED	THAMES
46103052	UNNAMED CLOSE STARTING AT 23 ASHDOWN AVE	Scunthorpe	488405.1	411751.13	4	7003	00196313	01/04/1993 00:00	6	3	LESS THAN 30MPH	BACK OF FOOTPATH	0	POST TOP	NOT APPLICABLE	RIGID COLUMN	URBIS	AXIA 2 S1	PETITJEAN	SHEET STEEL	6	GALVANISED	THAMES
46103071	FOOTPATH FROM ASTERBY ROAD TO BURINGHAM	Scunthorpe	488729.81	408414.83	1	7000	00203517	01/04/1999 00:00	3	4	NOT ON A ROAD	BACK OF FOOTPATH	0	POST TOP	NOT APPLICABLE	MID HINGED	URBIS	AXIA 2 S1	PETITJEAN	SHEET STEEL	5	GALVANISED	LEVEN
46103071	FOOTPATH FROM ASTERBY ROAD TO BURINGHAM	Scunthorpe	488765.99	408430.29	2	7001	00203518	01/04/1999 00:00	3	4	NOT ON A ROAD	BACK OF FOOTPATH	0	POST TOP	NOT APPLICABLE	MID HINGED	URBIS	AXIA 2 S1	PETITJEAN	SHEET STEEL	5	GALVANISED	LEVEN
46103071	FOOTPATH FROM ASTERBY ROAD TO BURINGHAM	Scunthorpe	488751.87	408480.39	3	7002	00203519	01/04/1995 00:00	3	4	NOT ON A ROAD	BACK OF FOOTPATH	0	POST TOP	NOT APPLICABLE	RIGID COLUMN	URBIS	AXIA 2 S1	PETITJEAN	SHEET STEEL	5	GALVANISED	NIDD
46103071	FOOTPATH FROM ASTERBY ROAD TO BURINGHAM	Scunthorpe	488745.72	408531.58	4	7003	00203520	09/10/2018 00:00	3	4	NOT ON A ROAD	BACK OF FOOTPATH	0	POST TOP	NOT APPLICABLE	MID HINGED	URBIS	AXIA 2 S1	MALLATITE	SHEET STEEL	6	GALVANISED	MALLATITE
46103071	FOOTPATH FROM ASTERBY ROAD TO BURINGHAM	Scunthorpe	488740.07	408581.98	5	7004	00203521	01/04/1995 00:00	3	4	NOT ON A ROAD	BACK OF FOOTPATH	0	POST TOP	NOT APPLICABLE	RIGID COLUMN	URBIS	AXIA 2 S1	PETITJEAN	SHEET STEEL	5	GALVANISED	NIDD
46103072	FOOTPATH FROM AXHOLME ROAD TO NEWLAND DR	Scunthorpe	487878.78	410967.4	1	7002	00183926	23/09/2016 00:00	2	3	NOT ON A ROAD	BACK OF FOOTPATH	0	POST TOP	NOT APPLICABLE	MID HINGED	PHILIPS	UNISTREET 4.5 KLM	VALMONT ST	SHEET STEEL	5	GALVANISED	LEVEN
46103072	FOOTPATH FROM AXHOLME ROAD TO NEWLAND DR	Scunthorpe	487899	410968	2	7001	04200079	23/09/2016 00:00	2	3	NOT ON A ROAD	BACK OF FOOTPATH	0	POST TOP	NOT APPLICABLE	MID HINGED	PHILIPS	UNISTREET 4.5 KLM	VALMONT ST	SHEET STEEL	5	GALVANISED	LEVEN
46103072	FOOTPATH FROM AXHOLME ROAD TO NEWLAND DR	Scunthorpe	487920.15	410965.63	3	7003	00183924	01/04/1995 00:00	2	3	NOT ON A ROAD	VERGE	0	POST TOP	NOT APPLICABLE	MID HINGED	URBIS	AXIA 2 S1	PETITJEAN	SHEET STEEL	6	GALVANISED	LEVEN
46103072	FOOTPATH FROM AXHOLME ROAD TO NEWLAND DR	Scunthorpe	487930.55	411000.34	4	7004	00183925	01/04/2015 00:00	2	3	NOT ON A ROAD	BACK OF FOOTPATH	0	POST TOP	NOT APPLICABLE	MID HINGED	WRTL	STELA LONG 16 LED	VALMONT ST	SHEET STEEL	6	GALVANISED	LEVEN
46103073	FOOTPATH FROM BAYSDALE ROAD TO LUNEDALE	Scunthorpe	490804.17	408191.1	1	7001	00195599	01/04/1992 00:00	1	3	LESS THAN 30MPH	BACK OF FOOTPATH	0	POST TOP	NOT APPLICABLE	RIGID COLUMN	URBIS	AXIA 2 S1	PETITJEAN	SHEET STEEL	6	GALVANISED	THAMES
46103073	FOOTPATH FROM BAYSDALE ROAD TO LUNEDALE	Scunthorpe	490831.59	408192.71	2	7002	00195600	01/04/1992 00:00	1	3	LESS THAN 30MPH	BACK OF FOOTPATH	0	POST TOP	NOT APPLICABLE	RIGID COLUMN	URBIS	AXIA 2 S1	PETITJEAN	SHEET STEEL	6	GALVANISED	THAMES
46103074	FOOTPATH FROM BODMIN CLOSE TO PLYMOUTH R	Scunthorpe	487779.54	409778.71	1	7000	00184539	01/04/1980 00:00	5	2	NOT ON A ROAD	BACK OF FOOTPATH	0	POST TOP	NOT APPLICABLE	RIGID COLUMN	URBIS	AXIA 2 S1	PETITJEAN	SHEET STEEL	5	GALVANISED	NIDD
46103075	FOOTPATH FROM BROCKLESBY ROAD TO MESSING	Scunthorpe	489031.2	407896.17	1	7001	00196930	01/04/1980 00:00	3	4	NOT ON A ROAD	BACK OF FOOTPATH	0	POST TOP	NOT APPLICABLE	RIGID COLUMN	URBIS	AXIA 2 S1	PETITJEAN	SHEET STEEL	5	GALVANISED	NIDD
46103077	FOOTPATHS BETWEEN ASHBY HIGH STREET AND	Scunthorpe	490368.38	408584.37	10	7005	00185228	01/04/1980 00:00	1	3	NOT ON A ROAD	BACK OF FOOTPATH	0	POST TOP	NOT APPLICABLE	RIGID COLUMN	URBIS	AXIA 2 S1	PETITJEAN	SHEET STEEL	5	GALVANISED	NIDD
46103077	FOOTPATHS BETWEEN ASHBY HIGH STREET AND	Scunthorpe	490367.32	408619.52	11	7006	00185229	01/04/1980 00:00	1	3	NOT ON A ROAD	BACK OF FOOTPATH	0	POST TOP	NOT APPLICABLE	RIGID COLUMN	URBIS	AXIA 2 S1	PETITJEAN	SHEET STEEL	5	GALVANISED	NIDD
46103081	FOOTPATH FROM EAST COMMON LANE TO FOWLER	Scunthorpe	489849.48	409699.03	1	7000	00203522	01/04/2010 00:00	3	2	NOT ON A ROAD	BACK OF FOOTPATH	0	POST TOP	NOT APPLICABLE	RIGID COLUMN	URBIS	AXIA 2 S1	VALMONT ST	SHEET STEEL	6	GALVANISED	LEVEN
46103082	FOOTPATH FROM EASTFIELD ROAD TO LINDSEY	Epworth Parish	478784.83	403749.13	2	7000	00190150	01/04/1980 00:00	5	3	LESS THAN 30MPH	BACK OF FOOTPATH	0	POST TOP	NOT APPLICABLE	RIGID COLUMN	URBIS	AXIA 2 S1	PETITJEAN	SHEET STEEL	5	GALVANISED	NIDD
46103087	FOOTPATH FROM SPENCER AVENUE TO HENDERSO	Scunthorpe	488711.1	411501.09	1	7000	00198344	01/04/1994 00:00	6	3	NOT ON A ROAD	BACK OF FOOTPATH	0	POST TOP	NOT APPLICABLE	MID HINGED	URBIS	AXIA 2 S1	PETITJEAN	SHEET STEEL	5	GALVANISED	LEVEN
46103087	FOOTPATH FROM SPENCER AVENUE TO HENDERSO	Scunthorpe	488740.51	411508.54	2	7001	00198345	01/04/1994 00:00	6	3	NOT ON A ROAD	BACK OF FOOTPATH	0	POST TOP	NOT APPLICABLE	MID HINGED	URBIS	AXIA 2 S1	PETITJEAN	SHEET STEEL	5	GALVANISED	LEVEN
46103087	FOOTPATH FROM SPENCER AVENUE TO HENDERSO	Scunthorpe	488769.97	411516.33	3	7002	00198346	01/04/1994 00:00	6	3	NOT ON A ROAD	BACK OF FOOTPATH	0	POST TOP	NOT APPLICABLE	MID HINGED	URBIS	AXIA 2 S1	PETITJEAN	SHEET STEEL	5	GALVANISED	LEVEN
46103087	FOOTPATH FROM SPENCER AVENUE TO HENDERSO	Scunthorpe	488799.75	411522.72	4	7003	00198347	01/04/1994 00:00	6	3	NOT ON A ROAD	BACK OF FOOTPATH	0	POST TOP	NOT APPLICABLE	MID HINGED	URBIS	AXIA 2 S1	PETITJEAN	SHEET STEEL	5	GALVANISED	LEVEN
46103087	FOOTPATH FROM SPENCER AVENUE TO HENDERSO	Scunthorpe	488827.64	411530.49	5	7004	00198348	01/04/1994 00:00	6	3	NOT ON A ROAD	BACK OF FOOTPATH	0	POST TOP	NOT APPLICABLE	MID HINGED	URBIS	AXIA 2 S1	PETITJEAN	SHEET STEEL	5	GALVANISED	LEVEN
46103087	FOOTPATH FROM SPENCER AVENUE TO HENDERSO	Scunthorpe	488858.16	411537.46	6	7005	00198349	01/04/1994 00:00	6	3	NOT ON A ROAD	BACK OF FOOTPATH	0	POST TOP	NOT APPLICABLE	MID HINGED	URBIS	AXIA 2 S1	PETITJEAN	SHEET STEEL	5	GALVANISED	LEVEN
46103089	FOOTPATH FROM ROWAN CRESCENT TO HOLME HA	Bottesford Parish	490031.09	407333.87	6	7000	00192899	01/04/2010 00:00	3	1	NOT ON A ROAD	BACK OF FOOTPATH	0	POST TOP	NOT APPLICABLE	MID HINGED	URBIS	AXIA 2 S1	MALLATITE	STEEL	6	GALVANISED	LEVEN
46103090	FOOTPATH FROM JACKLINS APPROACH TO THORN	Bottesford Parish	489303.15	407240.31	4	7001	00194655	01/04/2010 00:00	3	1	NOT ON A ROAD	BACK OF FOOTPATH	0	POST TOP	NOT APPLICABLE	MID HINGED	URBIS	AXIA 2 S1	VALMONT ST	SHEET STEEL	5	GALVANISED	LEVEN
46103091	FOOTPATH FROM KNIGHTS COURT TO ST PETERS	Bottesford Parish	489575.24	407295.05	7	7000	00198747	01/04/1980 00:00	3	1	NOT ON A ROAD	BACK OF FOOTPATH	0	POST TOP	NOT APPLICABLE	RIGID COLUMN	URBIS	AXIA 2 S1	PETITJEAN	SHEET STEEL	5	GALVANISED	NIDD
46103092	FOOTPATH FROM LANCASTER ROAD TO ROCHDALE	Scunthorpe	489553.54	408286.18	1	7000	00198782	01/04/1989 00:00	1	3	NOT ON A ROAD	BACK OF FOOTPATH

46103422	COLLEGE ROAD	Thornton Curtis Parish	513525.47	419538.27	13	7012	00203666	01/04/2001 00:00	4	4	LESS THAN 30MPH	VERGE	500	SINGLE ARM	NOT APPLICABLE	RIGID COLUMN	URBIS	AXIA 2 S1	MALLATITE	TUBULAR STEEL	6	GALVANISED	STEPPED TUBULAR
46103422	COLLEGE ROAD	Thornton Curtis Parish	513492.58	419529.05	14	7013	00203667	01/04/2001 00:00	4	4	LESS THAN 30MPH	VERGE	500	SINGLE ARM	NOT APPLICABLE	RIGID COLUMN	URBIS	AXIA 2 S1	MALLATITE	TUBULAR STEEL	6	GALVANISED	STEPPED TUBULAR
46103422	COLLEGE ROAD	Thornton Curtis Parish	513876.17	419650.4	2	7001	00203655	01/04/2001 00:00	4	4	LESS THAN 30MPH	BACK OF FOOTPATH	500	SINGLE ARM	NOT APPLICABLE	RIGID COLUMN	URBIS	AXIA 2 S1	MALLATITE	TUBULAR STEEL	6	GALVANISED	STEPPED TUBULAR
46103422	COLLEGE ROAD	Thornton Curtis Parish	513844.51	419641.31	3	7002	00203656	01/04/2001 00:00	4	4	LESS THAN 30MPH	BACK OF FOOTPATH	500	SINGLE ARM	NOT APPLICABLE	RIGID COLUMN	URBIS	AXIA 2 S1	MALLATITE	TUBULAR STEEL	6	GALVANISED	STEPPED TUBULAR
46103422	COLLEGE ROAD	Thornton Curtis Parish	513809.33	419630.76	4	7003	00203657	01/04/2001 00:00	4	4	LESS THAN 30MPH	BACK OF FOOTPATH	500	SINGLE ARM	NOT APPLICABLE	RIGID COLUMN	URBIS	AXIA 2 S1	MALLATITE	TUBULAR STEEL	6	GALVANISED	STEPPED TUBULAR
46103422	COLLEGE ROAD	Thornton Curtis Parish	513777.87	419623.1	5	7004	00203658	01/04/2001 00:00	4	4	LESS THAN 30MPH	BACK OF FOOTPATH	500	SINGLE ARM	NOT APPLICABLE	RIGID COLUMN	URBIS	AXIA 2 S1	MALLATITE	TUBULAR STEEL	6	GALVANISED	STEPPED TUBULAR
46103422	COLLEGE ROAD	Thornton Curtis Parish	513751.63	419613.95	6	7005	00203659	01/04/2001 00:00	4	4	LESS THAN 30MPH	BACK OF FOOTPATH	500	SINGLE ARM	NOT APPLICABLE	RIGID COLUMN	URBIS	AXIA 2 S1	MALLATITE	TUBULAR STEEL	6	GALVANISED	STEPPED TUBULAR
46103422	COLLEGE ROAD	Thornton Curtis Parish	513711.43	419602.64	7	7006	00203660	01/04/2001 00:00	4	4	LESS THAN 30MPH	BACK OF FOOTPATH	500	SINGLE ARM	NOT APPLICABLE	RIGID COLUMN	URBIS	AXIA 2 S1	MALLATITE	TUBULAR STEEL	6	GALVANISED	STEPPED TUBULAR
46103422	COLLEGE ROAD	Thornton Curtis Parish	513683.11	419583.03	8	7007	00203661	01/04/2001 00:00	4	4	LESS THAN 30MPH	VERGE	500	SINGLE ARM	NOT APPLICABLE	RIGID COLUMN	URBIS	AXIA 2 S1	MALLATITE	TUBULAR STEEL	6	GALVANISED	STEPPED TUBULAR
46103422	COLLEGE ROAD	Thornton Curtis Parish	513647.2	419583.8	9	7008	00203662	01/04/2001 00:00	4	4	LESS THAN 30MPH	BACK OF FOOTPATH	500	SINGLE ARM	NOT APPLICABLE	RIGID COLUMN	URBIS	AXIA 2 S1	MALLATITE	TUBULAR STEEL	6	GALVANISED	STEPPED TUBULAR
46103423	LUDDINGTON ROAD	Eastoft Parish	480475.59	416222.5	1	7000	00203668	01/04/1993 00:00	4	3	LESS THAN 30MPH	VERGE	500	SINGLE ARM	NOT APPLICABLE	RIGID COLUMN	URBIS	AXIA 2 S1	PETITJEAN	SHEET STEEL	6	GALVANISED	DAER
46103423	LUDDINGTON ROAD	Eastoft Parish	480487.43	416204.33	2	7001	00203669	01/04/1993 00:00	4	3	LESS THAN 30MPH	BACK OF FOOTPATH	500	SINGLE ARM	NOT APPLICABLE	RIGID COLUMN	URBIS	AXIA 2 S1	PETITJEAN	SHEET STEEL	6	GALVANISED	DAER
46103423	LUDDINGTON ROAD	Eastoft Parish	480503.82	416211.49	3	7002	00203670	01/04/1993 00:00	4	3	LESS THAN 30MPH	BACK OF FOOTPATH	500	SINGLE ARM	NOT APPLICABLE	RIGID COLUMN	URBIS	AXIA 2 S1	PETITJEAN	SHEET STEEL	6	GALVANISED	DAER
46103423	LUDDINGTON ROAD	Eastoft Parish	480520.85	416191.23	4	7003	00203671	01/04/1993 00:00	4	3	LESS THAN 30MPH	BACK OF FOOTPATH	500	SINGLE ARM	NOT APPLICABLE	RIGID COLUMN	URBIS	AXIA 2 S1	PETITJEAN	SHEET STEEL	6	GALVANISED	DAER
46103423	LUDDINGTON ROAD	Eastoft Parish	480550.4	416188.73	5	7004	00203672	01/04/1993 00:00	4	3	LESS THAN 30MPH	VERGE	500	SINGLE ARM	NOT APPLICABLE	RIGID COLUMN	URBIS	AXIA 2 S1	PETITJEAN	SHEET STEEL	6	GALVANISED	DAER
46103423	LUDDINGTON ROAD	Eastoft Parish	480574.38	416183.85	6	7005	00203673	01/04/1993 00:00	4	3	LESS THAN 30MPH	VERGE	500	SINGLE ARM	NOT APPLICABLE	RIGID COLUMN	URBIS	AXIA 2 S1	PETITJEAN	SHEET STEEL	6	GALVANISED	DAER
46103445	HOLME LANE	Messingham Parish	489576.71	405066.52	10	7008	00203682	31/10/2023 00:00	4	1	LESS THAN 30MPH	BACK OF FOOTPATH	0	POST TOP	NOT APPLICABLE	RIGID COLUMN	URBIS	AXIA 2 S1	MALLATITE	TUBULAR STEEL	6	GALVANISED	TUBULAR
46103445	HOLME LANE	Messingham Parish	489607.01	405070.71	11	7009	00203683	31/10/2023 00:00	4	1	LESS THAN 30MPH	BACK OF FOOTPATH	0	POST TOP	NOT APPLICABLE	RIGID COLUMN	URBIS	AXIA 2 S1	MALLATITE	TUBULAR STEEL	6	GALVANISED	TUBULAR
46103445	HOLME LANE	Messingham Parish	489635.96	405075.55	12	7010	00203684	31/10/2023 00:00	4	1	LESS THAN 30MPH	BACK OF FOOTPATH	0	POST TOP	NOT APPLICABLE	RIGID COLUMN	URBIS	AXIA 2 S1	MALLATITE	TUBULAR STEEL	6	GALVANISED	TUBULAR
46103445	HOLME LANE	Messingham Parish	489670.12	405080.1	13	7011	00203685	31/10/2023 00:00	4	1	LESS THAN 30MPH	BACK OF FOOTPATH	0	POST TOP	NOT APPLICABLE	RIGID COLUMN	URBIS	AXIA 2 S1	MALLATITE	TUBULAR STEEL	6	GALVANISED	TUBULAR
46103445	HOLME LANE	Messingham Parish	489696.28	405084.2	14	7012	00203686	31/10/2023 00:00	4	1	LESS THAN 30MPH	BACK OF FOOTPATH	0	POST TOP	NOT APPLICABLE	RIGID COLUMN	URBIS	AXIA 2 S1	MALLATITE	TUBULAR STEEL	6	GALVANISED	TUBULAR
46103445	HOLME LANE	Messingham Parish	489723.04	405088.8	15	7013	00203687	31/10/2023 00:00	4	1	LESS THAN 30MPH	BACK OF FOOTPATH	0	POST TOP	NOT APPLICABLE	RIGID COLUMN	URBIS	AXIA 2 S1	MALLATITE	TUBULAR STEEL	6	GALVANISED	TUBULAR
46103445	HOLME LANE	Messingham Parish	489749.25	405092.31	16	7014	00203688	31/10/2023 00:00	4	1	LESS THAN 30MPH	BACK OF FOOTPATH	0	POST TOP	NOT APPLICABLE	RIGID COLUMN	URBIS	AXIA 2 S1	MALLATITE	TUBULAR STEEL	6	GALVANISED	TUBULAR
46103445	HOLME LANE	Messingham Parish	489323.53	405042.91	1FP	7015	00203689	31/10/2023 00:00	4	1	LESS THAN 30MPH	BACK OF FOOTPATH	0	POST TOP	NOT APPLICABLE	RIGID COLUMN	URBIS	AXIA 2 S1	MALLATITE	TUBULAR STEEL	6	GALVANISED	TUBULAR
46103445	HOLME LANE	Messingham Parish	489360.09	405036.46	2	7000	00203674	31/10/2023 00:00	4	1	LESS THAN 30MPH	BACK OF FOOTPATH	0	POST TOP	NOT APPLICABLE	RIGID COLUMN	URBIS	AXIA 2 S1	MALLATITE	TUBULAR STEEL	6	GALVANISED	TUBULAR
46103445	HOLME LANE	Messingham Parish	489386.65	405039.9	3	7001	00203675	31/10/2023 00:00	4	1	LESS THAN 30MPH	BACK OF FOOTPATH	0	POST TOP	NOT APPLICABLE	RIGID COLUMN	URBIS	AXIA 2 S1	MALLATITE	TUBULAR STEEL	6	GALVANISED	TUBULAR
46103445	HOLME LANE	Messingham Parish	489417.24	405043.66	4	7002	00203676	31/10/2023 00:00	4	1	LESS THAN 30MPH	BACK OF FOOTPATH	0	POST TOP	NOT APPLICABLE	RIGID COLUMN	URBIS	AXIA 2 S1	MALLATITE	TUBULAR STEEL	6	GALVANISED	TUBULAR
46103445	HOLME LANE	Messingham Parish	489442.97	405047.1	5	7003	00203677	31/10/2023 00:00	4	1	LESS THAN 30MPH	BACK OF FOOTPATH	0	POST TOP	NOT APPLICABLE	RIGID COLUMN	URBIS	AXIA 2 S1	MALLATITE	TUBULAR STEEL	6	GALVANISED	TUBULAR
46103445	HOLME LANE	Messingham Parish	489466.89	405050.87	6	7004	00203678	31/10/2023 00:00	4	1	LESS THAN 30MPH	BACK OF FOOTPATH	0	POST TOP	NOT APPLICABLE	RIGID COLUMN	URBIS	AXIA 2 S1	MALLATITE	TUBULAR STEEL	6	GALVANISED	TUBULAR
46103445	HOLME LANE	Messingham Parish	489494.69	405054.99	7	7005	00203679	31/10/2023 00:00	4	1	LESS THAN 30MPH	BACK OF FOOTPATH	0	POST TOP	NOT APPLICABLE	RIGID COLUMN	URBIS	AXIA 2 S1	MALLATITE	TUBULAR STEEL	6	GALVANISED	TUBULAR
46103445	HOLME LANE	Messingham Parish	489521.46	405058.58	8	7006	00203680	31/10/2023 00:00	4	1	LESS THAN 30MPH	BACK OF FOOTPATH	0	POST TOP	NOT APPLICABLE	RIGID COLUMN	URBIS	AXIA 2 S1	MALLATITE	TUBULAR STEEL	6	GALVANISED	TUBULAR
46103445	HOLME LANE	Messingham Parish	489550.61	405063.56	9	7007	00203681	31/10/2023 00:00	4	1	LESS THAN 30MPH	BACK OF FOOTPATH	0	POST TOP	NOT APPLICABLE	RIGID COLUMN	URBIS	AXIA 2 S1	MALLATITE	TUBULAR STEEL	6	GALVANISED	TUBULAR
46103461	OUTMILL	West Butterwick Parish	482886.35	408103.69	1	7000	00203690	01/04/1970 00:00	4	3	GREATER THAN 50MPH	VERGE	300	SINGLE ARM	MID GREY	RIGID COLUMN	URBIS	AXIA 2 S1	CU	TUBULAR STEEL	5	PAINTED	STEPPED TUBULAR
46103461	OUTMILL	West Butterwick Parish	482844.08	408110.33	2	7001	00203691	01/04/1970 00:00	4	3	GREATER THAN 50MPH	VERGE	300	SINGLE ARM	MID GREY	RIGID COLUMN	URBIS	AXIA 2 S1	CU	TUBULAR STEEL	5	PAINTED	STEPPED TUBULAR
46103473	MAIN STREET	Worlaby Parish	501424.74	413748.16	1	7000	00203692	01/04/1973 00:00	6	3	LESS THAN 30MPH	BACK OF FOOTPATH	500	SINGLE ARM	MID GREY	RIGID COLUMN	URBIS	AXIA 2 S1	PETITJEAN	SHEET STEEL	5	PAINTED	DAER
46103473	MAIN STREET	Worlaby Parish	501444.18	413779.45	2	7001	00203693	01/04/1973 00:00	6	3	LESS THAN 30MPH	BACK OF FOOTPATH	500	SINGLE ARM	MID GREY	RIGID COLUMN	URBIS	AXIA 2 S1	PETITJEAN	SHEET STEEL	5	PAINTED	DAER
46103473	MAIN STREET	Worlaby Parish	501449.2	413820.44	3	7002	00203694	01/04/1973 00:00	6	3	LESS THAN 30MPH	BACK OF FOOTPATH	500	SINGLE ARM	MID GREY	RIGID COLUMN	URBIS	AXIA 2 S1	PETITJEAN	SHEET STEEL	5	PAINTED	DAER
46103473	MAIN STREET	Worlaby Parish	501459.63	413839.44	4	7003	00203695	01/04/1973 00:00	6	3	LESS THAN 30MPH	BACK OF FOOTPATH	500	SINGLE ARM	MID GREY	RIGID COLUMN	URBIS	AXIA 2 S1	PETITJEAN	SHEET STEEL	5	PAINTED	DAER
46103473	MAIN STREET	Worlaby Parish	501476.54	413870.55	5	7004	00203696	01/04/1973 00:00	6	3	LESS THAN 30MPH	BACK OF FOOTPATH	500	SINGLE ARM	MID GREY	RIGID COLUMN	URBIS	AXIA 2 S1	PETITJEAN	SHEET STEEL	5	PAINTED	DAER
46103473	MAIN STREET	Worlaby Parish	501502.13	413868.77	6	7005	00203697	01/04/1973 00:00	6	3	LESS THAN 30MPH	BACK OF FOOTPATH	500	SINGLE ARM	MID GREY	RIGID COLUMN	URBIS	AXIA 2 S1	PETITJEAN	SHEET STEEL	5	PAINTED	DAER
46103478	MESSINGHAM ROAD	Scunthorpe	489066.51	408310.51	10	7009	00203707	01/04/1975 00:00	3	4	LESS THAN 30MPH	BACK OF FOOTPATH	1250	SINGLE ARM	LIGHT GREY	RIGID COLUMN	URBIS	AXIA 2 S1	PETITJEAN	SHEET STEEL	10	PAINTED	THAMES
46103478	MESSINGHAM ROAD	Scunthorpe	489081.03	408280.53	11	7010	00203708	01/04/1975 00:00	3	4	LESS THAN 30MPH	BACK OF FOOTPATH	1250	SINGLE ARM	LIGHT GREY	RIGID COLUMN	URBIS	AXIA 2 S1	PETITJEAN	SHEET STEEL	10	PAINTED	THAMES
46103478	MESSINGHAM ROAD	Scunthorpe	489068.52	408248.37	12	7011	00203709	01/04/1975 00:00	3	4	LESS THAN 30MPH	BACK OF FOOTPATH	1250	SINGLE ARM	LIGHT GREY	RIGID COLUMN	URBIS	AXIA 2 S1	PETITJEAN	SHEET STEEL	10	PAINTED	THAMES
46103478	MESSINGHAM ROAD	Scunthorpe	489083.17	408220.14	13	7012	00203710	01/04/1975 00:00	3	4	LESS THAN 30MPH	BACK OF FOOTPATH	1250	SINGLE ARM	LIGHT GREY	RIGID COLUMN	URBIS	AXIA 2 S1	PETITJEAN	SHEET STEEL	10	PAINTED	THAMES
46103478	MESSINGHAM ROAD	Scunthorpe	489070.13	408188.1	14	7013	00203711	01/04/1975 00:00	3	4	LESS THAN 30MPH	BACK OF FOOTPATH	1250	SINGLE ARM	LIGHT GREY	RIGID COLUMN	URBIS	AXIA 2 S1	PETITJEAN	SHEET STEEL	10	PAINTED	THAMES
46103478	MESSINGHAM ROAD	Scunthorpe	489084.76	408158.77	15	7014	00203712	01/04/1975 00:00	3	4	LESS THAN 30MPH	BACK OF FOOTPATH	1250	SINGLE ARM	LIGHT GREY	RIGID COLUMN	URBIS	AXIA 2 S1	PETITJEAN	SHEET STEEL	10	PAINTED	THAMES
46103478	MESSINGHAM ROAD	Scunthorpe	489071.9	408132.33	16	7015	00203713	01/04/1975 00:00	3	4	LESS THAN 30MPH	BACK OF FOOTPATH	1250	SINGLE ARM	LIGHT GREY	RIGID COLUMN	URBIS	AXIA 2 S1	PETITJEAN	SHEET STEEL	10	PAINTED	THAMES
46103478	MESSINGHAM ROAD	Scunthorpe	489086.55	408110.18	17	7016	00203714	01/04/1975 00:00	3	4	LESS THAN 30MPH	BACK OF FOOTPATH	1250	SINGLE ARM	LIGHT GREY	RIGID COLUMN	URBIS	AXIA 2 S1	PETITJEAN	SHEET STEEL	10	PAINTED	THAMES
46103478	MESSINGHAM ROAD	Scunthorpe	489073.16	408082.76	18	7017	00203715	01/04/1975 00:00	3	4	LESS THAN 30MPH	BACK OF FOOTPATH	1250	SINGLE ARM	LIGHT GREY	RIGID COLUMN	URBIS	AXIA 2 S1	PETITJEAN	SHEET STEEL	10	PAINTED	THAMES
46103478	MESSINGHAM ROAD	Scunthorpe	489088.46	408045.15	19	7018	00203716	01/04/1975 00:00	3	4	LESS THAN 30MPH	BACK OF FOOTPATH	1250	SINGLE ARM	LIGHT GREY	RIGID COLUMN	URBIS	AXIA 2 S1	PETITJEAN	SHEET STEEL	10	PAINTED	THAMES
46103478	MESSINGHAM ROAD	Scunthorpe	489070.94	408613.76	1FP	7000	00203698	01/04/1994 00:00	3	4	LESS THAN 30MPH	BACK OF FOOTPATH	1250	SINGLE ARM	LIGHT GREY	RIGID COLUMN	URBIS	AXIA 2 S1	PETITJEAN	SHEET STEEL	10	PAINTED	THAMES
46103478	MESSINGHAM ROAD	Scunthorpe	489057.7	408582.96	2	7001	00203699	01/04/1975 00:00	3	4	LESS THAN 30MPH	BACK OF FOOTPATH	1250	SINGLE ARM	LIGHT GREY	RIGID COLUMN	URBIS	AXIA 2 S1	PETITJEAN	SHEET STEEL	10	PAINTED	THAMES
46103478	MESSINGHAM ROAD	Scunthorpe	489077.08	408008.67	20	7019	00203717	01/04/1975 00:00	3	4	LESS THAN 30MPH	VERGE	1250	SINGLE ARM	LIGHT GREY	RIGID COLUMN	URBIS	AXIA 2 S1	PETITJEAN	SHEET STEEL	10	PAINTED	THAMES
46103478	MESSINGHAM ROAD	Scunthorpe	489089.98	407967.69	21	7020	00203718	01/04/1975 00:00	3	4	LESS THAN 30MPH	BACK OF FOOTPATH	1250	SINGLE ARM	LIGHT GREY	RIGID COLUMN	URBIS	AXIA 2 S1	PETITJEAN	SHEET STEEL	10	PAINTED	THAMES
46103478	MESSINGHAM ROAD	Scunthorpe	489078.31	407931.29	22	7021	00203719	01/04/1975 00:00	3	4	LESS THAN 30MPH	VERGE	1250	SINGLE ARM	LIGHT GREY	RIGID COLUMN	URBIS	AXIA 2 S1	PETITJEAN	SHEET STEEL	10	PAINTED	THAMES
46103478	MESSINGHAM ROAD	Scunthorpe	489092.7	407892.84	23	7022	00203720	01/04/1975 00:00	3	4	LESS THAN 30MPH	BACK OF FOOTPATH	1250	SINGLE ARM	LIGHT GREY	RIGID COLUMN	URBIS	AXIA 2 S1	PETITJEAN	SHEET STEEL	10	PAINTED	THAMES
46103478	MESSINGHAM ROAD	Scunthorpe	489093.88	407862.81	24	7023	00203721	01/04/1975 00:00	3	4	LESS THAN 30MPH	BACK OF FOOTPATH	1250	SINGLE ARM	LIGHT GREY	RIGID COLUMN	URBIS	AXIA 2 S1	PETITJEAN	SHEET STEEL	10	PAINTED	THAMES
46103478	MESSINGHAM ROAD	Scunthorpe	489081.4	407831.24	25	7024	00203722	01/04/1975 00:00	3	4	LESS THAN 30MPH	VERGE	1250	SINGLE ARM	LIGHT GREY	RIGID COLUMN	URBIS	AXIA 2 S1	PETITJEAN	SHEET STEEL	10	PAINTED	THAMES
46103478	MESSINGHAM ROAD	Scunthorpe	489071.99	408546.67	3	7002	00203700	01/04/1975 00:00	3	4	LESS THAN 30MPH	BACK OF FOOTPATH	1250	SINGLE ARM	LIGHT GREY	RIGID COLUMN	URBIS	AXIA 2 S1	PETITJEAN	SHEET STEEL	10	PAINTED	THAMES
46103478	MESSINGHAM ROAD	Scunthorpe	489059.84	408513.44	4	7003	00203701	01/04/1975 00:00	3	4	LESS THAN 30MPH	BACK OF FOOTPATH	1250	SINGLE ARM	LIGHT GREY	RIGID COLUMN	URBIS	AXIA 2 S1	PETITJEAN	SHEET STEEL	10	PAINTED	THAMES
46103478	MESSINGHAM ROAD	Scunthorpe	489074.86	408485.86	5	7004	00203702	01/04/1975 00:00	3	4	LESS THAN 30MPH	BACK OF FOOTPATH	1250	SINGLE ARM	LIGHT GREY	RIGID COLUMN	URBIS	AXIA 2 S1	PETITJEAN	SHEET STEEL	10	PAINTED	THAMES
46103478	MESSINGHAM ROAD	Scunthorpe	489062.36	408451.2	6	7005	00203703	01/04/1975 00:00	3	4	LESS THAN 30MPH	BACK OF FOOTPATH	1250	SINGLE ARM	LIGHT GREY	RIGID COLUMN	URBIS	AXIA 2 S1	PETITJEAN	SHEET STEEL	10	PAINTED	THAMES
46103478	MESSINGHAM ROAD	Scunthorpe	489077.23	408413.41	7	7006	00203704	01/04/1975 00:00	3	4	LESS THAN 30MPH	BACK OF FOOTPATH	1250	SINGLE ARM	LIGHT GREY	RIGID COLUMN	URBIS	AXIA 2 S1	PETITJEAN	SHEET STEEL	10	PAINTED	THAMES
46103478	MESSINGHAM ROAD	Scunthorpe	489064.36	408379.79	8	7007	00203705	01/04/1975 00:00	3	4	LESS THAN 30MPH	BACK OF FOOTPATH	1250	SINGLE ARM	LIGHT GREY	RIGID COLUMN	URBIS	AXIA 2 S1	PETITJEAN	SHEET STEEL	10	PAINTED	THAMES
46103478	MESSINGHAM ROAD	Scunthorpe	489079.48	408347.67	9	7008	00203706	01/04/1975 00:00	3	4	LESS THAN 30MPH	BACK OF FOOTPATH	1250	SINGLE ARM	LIGHT GREY	RIGID COLUMN	URBIS	AXIA 2 S1	PETITJEAN	SHEET STEEL	10	PAINTED	THAMES
46103479	WOODHOUSE ROAD	Belton Parish	478355.8	407949.02	10	7003	00188445	19/01/2022 00:00	5	3	BETWEEN 30-50 MPH	VERGE	0	POST TOP	NOT APPLICABLE	RIGID COLUMN	URBIS	AXIA 2 S1	MALLATITE	TUBULAR STEEL	6	GALVANISED	TUBULAR
46103479	WOODHOUSE ROAD	Belton Parish	478346.81	407922.73	11	7004	00188446	19/01/2022 00:00	5	3	BETWEEN 30-50 MPH	VERGE	0	POST TOP	NOT APPLICABLE	RIGID COLUMN	URBIS	AXIA 2 S1	MALLATITE	TUBULAR STEEL	6	GALVANISED	TUBULAR
46103479	WOODHOUSE ROAD	Belton Parish	478338.3	407895.32	12	7005	00188447	19/01/2022 00:00	5	3	BETWEEN 30-50 MPH	VERGE	0	POST TOP	NOT APPLICABLE	RIGID COLUMN	URBIS	AXIA 2 S1	MALLATITE	TUBULAR STEEL	6	GALVANISED	TUBULAR
46103479	WOODHOUSE ROAD	Belton Parish	478333.14	407868.47	13	7006	00188448	19/01/2022 00:00	5	3	BETWEEN 30-50 MPH	VERGE	0	POST TOP	NOT APPLICABLE	RIGID COLUMN	URBIS	AXIA 2 S1	MALLATITE	TUBULAR STEEL	6	GALVANISED	TUBULAR
46103479	WOODHOUSE ROAD	Belton Parish	478335.7	407840.43	14	7007	00188449	19/01/2022 00:00	5	3	BETWEEN 30-50 MPH	VERGE	0	POST TOP	NOT APPLICABLE	RIGID COLUMN	URBIS	AXIA 2 S1	MALLATITE	TUBULAR STEEL	6	GALVANISED	TUBULAR
46103479	WOODHOUSE ROAD	Belton Parish	478328.92	407813.21	15	7008	00188450	19/01/2022 00:00	5	3	BETWEEN 30-50 MPH	VERGE	0	POST TOP	NOT APPLICABLE	RIGID COLUMN	URBIS	AXIA 2 S1	MALLATITE	TUBULAR STEEL	6	GALVANISED	TUBULAR
46103479	WOODHOUSE ROAD	Belton Parish	478385.19	408047.88	7	7000	00188442	04/09/2020 00:00	5	3	GREATER THAN 50MPH	ON POLE	300	SINGLE ARM	NOT APPLICABLE	POLE MOUNTED	URBIS	AXIA 2 S1	WOODEN PO	WOOD	4	NOT APPLICABI	Not Applicable
46103479	WOODHOUSE ROAD	Belton Parish	478358.69	408009.49	8	7001	00188443	19/01/2022 00:00	5	3	BETWEEN 30-50 MPH	VERGE	0	POST TOP	NOT APPLICABLE	RIGID COLUMN	URBIS	AXIA 2 S1	MALLATITE	TUBULAR STEEL	6	GALVANISED	TUBULAR
46103479	WOODHOUSE ROAD	Belton Parish	478362.69	407973.55	9	7002	00188444	19/01/2022 00:00	5	3	BETWEEN 30-50 MPH	VERGE	0	POST TOP	NOT APPLICABLE	RIGID COLUMN	URBIS	AXIA 2 S1	MALLATITE	TUBULAR STEEL	6	GALVANISED	TUBULAR
46103481	ACCESS ROAD TO WEST SIDE OF HEREWARD PLA	Scunthorpe	490939.8	409140.34	1	7000	00203723	01/04/2006 00:00	3	2	LESS THAN 30MPH	BACK OF FOOTPATH	0	POST TOP	NOT APPLICABLE	RIGID COLUMN	URBIS	AXIA 2 S1	MALLATITE	TUBULAR STEEL	5	GALVANISED	STEPPED TUBULAR
46103481	ACCESS ROAD TO WEST SIDE OF HEREWARD PLA	Scunthorpe	490947.11	409172.49	2	7001	00203724	01/04/2006 00:00	3	2	LESS THAN 30MPH	BACK OF FOOTPATH	0	POST TOP	NOT APPLICABLE	RIGID COLUMN	URBIS	AXIA 2 S1	MALLATITE	TUBULAR STEEL	5	GALVANISED	STEPPED TUBULAR
46103481	ACCESS ROAD TO WEST SIDE OF HEREWARD PLA	Scunthorpe	490953.81	409201.15	3	7002	00203725	01/04/2006 00:00	3	2	LESS THAN 30MPH	BACK OF FOOTPATH	0	POST TOP	NOT APPLICABLE	RIGID COLUMN	URBIS	AXIA 2 S1	MALLATITE	TUBULAR STEEL	5	GALVANISED	STEPPED TUBULAR
46103481	ACCESS ROAD TO WEST SIDE OF HEREWARD PLA	Scunthorpe	490960.93	409232.79	4	7003	00203726	01/04/2006 00:00	3	2	LESS THAN 30MPH	BACK OF FOOTPATH	0	POST TOP	NOT APPLICABLE	RIGID COLUMN	URBIS	AXIA 2 S1	MALLATITE	TUBULAR STEEL	5	GALVANISED	STEPPED TUBULAR
46103487	HOOK ROAD	Amcotts Parish	485380.84	414108.61	1	7003	00203730	01/04/1993 00:00	4	2	LESS THAN 30MPH	VERGE	800	SINGLE ARM	NOT APPLICABLE	RIGID COLUMN	URBIS	AXIA 2 S1	PETITJEAN	SHEET STEEL	6	GALVANISED	DAER
46103487	HOOK ROAD	Amcotts Parish	485382.69	414078.6	2	7004	00203731	01/04/1993 00:00	4	2	LESS THAN 30MPH	VERGE	800	SINGLE ARM	NOT APPLICABLE	RIGID COLUMN	URBIS	AXIA 2 S1	PETITJEAN	SHEET STEEL	6	GALVANISED	DAER
46103487	HOOK ROAD	Amcotts Parish	485386.08	414052.62	3	7005	00203732	01/04/1993 00:00	4	2	LESS THAN 30MPH	VERGE	800	SINGLE ARM	NOT APPLICABLE	RIGID COLUMN	URBIS	AXIA 2 S1	PETITJEAN	SHEET STEEL	6	GALVANISED	DAER
46103487	HOOK ROAD	Amcotts Parish	485383.54	414021.41	4	7000	00203727	01/04/1993 00:00	4	2	LESS THAN 30MPH	VERGE	800	SINGLE ARM	NOT APPLICABLE	RIGID COLUMN	URBIS	AXIA 2 S1	PETITJEAN	SHEET STEEL	6	GALVANISED	DAER
46103487	HOOK ROAD	Amcotts Parish	485372.43	413980.59	5	7001	00203728	01/04/1993 00:00	4	2	LESS THAN 30MPH	VERGE	800	SINGLE ARM	NOT APPLICABLE	RIGID COLUMN	URBIS	AXIA 2 S1	PETITJEAN	SHEET STEEL	6	GALVANISED	DAER
46103487	HOOK ROAD	Amcotts Parish	485370.31	413954.96	6	7002	00203729	31/10/2023 00:00	4	2	GREATER THAN 50MPH	VERGE	NA	POST TOP	NOT APPLICABLE	RIGID COLUMN	URBIS	AXIA 2 S1	MALLATITE	TUBULAR STEEL	6	GALVANISED	MALLATITE
46103489	ACRE LANE	Crowle Parish	477311.37	413258.68	1	7000	00203733	01/04/1980 00:00	5	1	LESS THAN 30MPH	BACK OF FOOTPATH	0	POST TOP	NOT APPLICABLE	RIGID COLUMN	URBIS	AXIA 2 S1	MALLATITE	TUBULAR STEEL	5	GALVANISED	STEPPED TUBULAR
46103489	ACRE LANE	Crowle Parish	477250.01	413282.52	2	7001	00203734	01/04/1980 00:00	5	1	LESS THAN 30MPH	BACK OF FOOTPATH	300	SINGLE ARM	NOT APPLICABLE	RIGID COLUMN	URBIS	AXIA 2 S1	PETITJEAN	SHEET STEEL	5	GALVANISED	DAER
46103489	ACRE LANE	Crowle Parish	477200.89	413272.39	3	7002	00203735	01/04/2008 00:00	5	1	N

46103536	TOWER HILL	Haxey Parish	476286.28	399821.86	5	7004	00203884	01/04/2004 00:00	6	2	BETWEEN 30-50 MPH	BACK OF FOOTPATH	0	POST TOP	NOT APPLICABLE	RIGID COLUMN	URBIS	AXIA 2 S1	MALLATITE	TUBULAR STEEL	5	GALVANISED	STEPPED TUBULAR
46103536	TOWER HILL	Haxey Parish	476258.74	399816.67	6	7005	00203885	01/04/2004 00:00	6	2	BETWEEN 30-50 MPH	BACK OF FOOTPATH	0	POST TOP	NOT APPLICABLE	RIGID COLUMN	URBIS	AXIA 2 S1	MALLATITE	TUBULAR STEEL	5	GALVANISED	STEPPED TUBULAR
46103536	TOWER HILL	Haxey Parish	476227.05	399810.81	7	7006	00203886	01/04/2004 00:00	6	2	BETWEEN 30-50 MPH	BACK OF FOOTPATH	0	POST TOP	NOT APPLICABLE	RIGID COLUMN	URBIS	AXIA 2 S1	MALLATITE	TUBULAR STEEL	5	GALVANISED	STEPPED TUBULAR
46103536	TOWER HILL	Haxey Parish	476198.92	399804.75	8	7007	00203887	01/04/2004 00:00	6	2	BETWEEN 30-50 MPH	BACK OF FOOTPATH	0	POST TOP	NOT APPLICABLE	RIGID COLUMN	URBIS	AXIA 2 S1	MALLATITE	TUBULAR STEEL	5	GALVANISED	STEPPED TUBULAR
46103536	TOWER HILL	Haxey Parish	476158.37	399796.91	9	7008	00203888	01/04/2004 00:00	6	2	BETWEEN 30-50 MPH	BACK OF FOOTPATH	0	POST TOP	NOT APPLICABLE	RIGID COLUMN	URBIS	AXIA 2 S1	MALLATITE	TUBULAR STEEL	5	GALVANISED	STEPPED TUBULAR
46103539	CHURCH FARM MEWS	Burton upon Stather Parish	487071.38	417883.79	1	7000	00203901	01/04/2002 00:00	2	3	LESS THAN 30MPH	VERGE	0	POST TOP	BLACK	RIGID COLUMN	DW WINDSOR	STREET	WINDSOR	TUBULAR STEEL	5	PAINTED	OXFORD
46103539	CHURCH FARM MEWS	Burton upon Stather Parish	487066.01	417895.38	2	7001	00203902	01/04/2002 00:00	2	3	LESS THAN 30MPH	VERGE	0	POST TOP	BLACK	RIGID COLUMN	DW WINDSOR	STREET	WINDSOR	TUBULAR STEEL	5	PAINTED	OXFORD
46103539	CHURCH FARM MEWS	Burton upon Stather Parish	487083.56	417906.97	3	7002	00203903	01/04/2002 00:00	2	3	LESS THAN 30MPH	VERGE	0	POST TOP	BLACK	RIGID COLUMN	DW WINDSOR	STREET	WINDSOR	TUBULAR STEEL	5	PAINTED	OXFORD
46103543	THE OLD ESTATE YARD	Burton upon Stather Parish	488309.09	416744.37	1	7000	00203904	01/04/1990 00:00	2	3	LESS THAN 30MPH	VERGE	0	POST TOP	BLACK	RIGID COLUMN	URBIS	PILZEO 16 LED 3.19 KLM	BRITISH STEE	TUBULAR STEEL	5	PAINTED	ASH
46103543	THE OLD ESTATE YARD	Burton upon Stather Parish	488299.1	416729.19	2	7001	00203905	01/04/1990 00:00	2	3	LESS THAN 30MPH	VERGE	0	POST TOP	BLACK	RIGID COLUMN	URBIS	PILZEO 16 LED 3.19 KLM	BRITISH STEE	TUBULAR STEEL	5	PAINTED	ASH
46103543	THE OLD ESTATE YARD	Burton upon Stather Parish	488304.42	416704.4	3	7002	00203906	01/04/1990 00:00	2	3	LESS THAN 30MPH	VERGE	0	POST TOP	BLACK	RIGID COLUMN	URBIS	PILZEO 16 LED 3.19 KLM	BRITISH STEE	TUBULAR STEEL	5	PAINTED	ASH
46103543	THE OLD ESTATE YARD	Burton upon Stather Parish	488325.65	416698.22	4	7003	00203907	01/04/1990 00:00	2	3	LESS THAN 30MPH	VERGE	0	POST TOP	BLACK	RIGID COLUMN	URBIS	PILZEO 16 LED 3.19 KLM	BRITISH STEE	TUBULAR STEEL	5	PAINTED	ASH
46103543	THE OLD ESTATE YARD	Burton upon Stather Parish	488285.33	416702.79	5	7004	00203908	01/04/1990 00:00	2	3	LESS THAN 30MPH	VERGE	0	POST TOP	BLACK	RIGID COLUMN	URBIS	PILZEO 16 LED 3.19 KLM	BRITISH STEE	TUBULAR STEEL	5	PAINTED	ASH
46103543	THE OLD ESTATE YARD	Burton upon Stather Parish	488287.75	416679.67	6	7005	00203909	01/04/1990 00:00	2	3	LESS THAN 30MPH	VERGE	0	POST TOP	BLACK	RIGID COLUMN	URBIS	PILZEO 16 LED 3.19 KLM	BRITISH STEE	TUBULAR STEEL	5	PAINTED	ASH
46103549	PRIMROSE WAY	Flixborough Parish	487316.59	412778.9	1	7000	00203910	01/04/1995 00:00	2	1	LESS THAN 30MPH	BACK OF FOOTPATH	0	POST TOP	NOT APPLICABLE	RIGID COLUMN	URBIS	AXIA 2 S1	PETITJEAN	SHEET STEEL	5	GALVANISED	NIDD
46103549	PRIMROSE WAY	Flixborough Parish	487319.72	412809.73	2	7001	00203911	01/04/1995 00:00	2	1	LESS THAN 30MPH	BACK OF FOOTPATH	0	POST TOP	NOT APPLICABLE	RIGID COLUMN	URBIS	AXIA 2 S1	PETITJEAN	SHEET STEEL	5	GALVANISED	NIDD
46103549	PRIMROSE WAY	Flixborough Parish	487264.02	412825.62	3	7002	00203912	01/04/1995 00:00	2	1	LESS THAN 30MPH	BACK OF FOOTPATH	0	POST TOP	NOT APPLICABLE	RIGID COLUMN	URBIS	AXIA 2 S1	PETITJEAN	SHEET STEEL	5	GALVANISED	NIDD
46103549	PRIMROSE WAY	Flixborough Parish	487286.33	412817.56	4	7003	00203913	01/04/1995 00:00	2	1	LESS THAN 30MPH	BACK OF FOOTPATH	0	POST TOP	NOT APPLICABLE	RIGID COLUMN	URBIS	AXIA 2 S1	PETITJEAN	SHEET STEEL	5	GALVANISED	NIDD
46103549	PRIMROSE WAY	Flixborough Parish	487314.51	412829.76	5	7004	00203914	01/04/1995 00:00	2	1	LESS THAN 30MPH	BACK OF FOOTPATH	0	POST TOP	NOT APPLICABLE	RIGID COLUMN	URBIS	AXIA 2 S1	PETITJEAN	SHEET STEEL	5	GALVANISED	NIDD
46103549	PRIMROSE WAY	Flixborough Parish	487340.67	412823.67	6	7005	00203915	01/04/1995 00:00	2	1	LESS THAN 30MPH	BACK OF FOOTPATH	0	POST TOP	NOT APPLICABLE	RIGID COLUMN	URBIS	AXIA 2 S1	PETITJEAN	SHEET STEEL	5	GALVANISED	NIDD
46103549	PRIMROSE WAY	Flixborough Parish	487359.22	412827.7	7	7006	00203916	01/04/1995 00:00	2	1	LESS THAN 30MPH	VERGE	0	POST TOP	NOT APPLICABLE	RIGID COLUMN	URBIS	AXIA 2 S1	PETITJEAN	SHEET STEEL	5	GALVANISED	NIDD
46103550	BURRINGHAM ROAD	Burringham Parish	487113.76	408363.26	1	7000	00203917	01/04/1989 00:00	2	1	BETWEEN 30-50 MPH	VERGE	1000	SINGLE ARM	NOT APPLICABLE	RIGID COLUMN	URBIS	AXIA 2 S1	PETITJEAN	SHEET STEEL	8	GALVANISED	THAMES
46103550	BURRINGHAM ROAD	Burringham Parish	484265.48	410828.98	1	7022	00203939	01/04/2015 00:00	2	1	BETWEEN 30-50 MPH	FRONT OF FOOTPATH	500	SINGLE ARM	NOT APPLICABLE	RIGID COLUMN	URBIS	AXIA 2 S1	VALMONT ST	SHEET STEEL	8	GALVANISED	THAMES
46103550	BURRINGHAM ROAD	Burringham Parish	484246.89	410713.19	10	7031	00203948	01/04/1989 00:00	2	1	BETWEEN 30-50 MPH	FRONT OF FOOTPATH	1000	SINGLE ARM	NOT APPLICABLE	RIGID COLUMN	URBIS	AXIA 2 S1	PETITJEAN	SHEET STEEL	8	GALVANISED	THAMES
46103550	BURRINGHAM ROAD	Burringham Parish	486837.13	408358.21	10	7009	00203926	01/04/1989 00:00	2	1	BETWEEN 30-50 MPH	VERGE	1000	SINGLE ARM	NOT APPLICABLE	RIGID COLUMN	URBIS	AXIA 2 S1	PETITJEAN	SHEET STEEL	8	GALVANISED	THAMES
46103550	BURRINGHAM ROAD	Burringham Parish	486807.27	408358.07	11	7010	00203927	01/04/1989 00:00	2	1	BETWEEN 30-50 MPH	VERGE	1000	SINGLE ARM	NOT APPLICABLE	RIGID COLUMN	URBIS	AXIA 2 S1	PETITJEAN	SHEET STEEL	8	GALVANISED	THAMES
46103550	BURRINGHAM ROAD	Burringham Parish	484236.5	410675.58	11	7032	00203949	01/04/2014 00:00	2	1	BETWEEN 30-50 MPH	BACK OF FOOTPATH	500	SINGLE ARM	NOT APPLICABLE	RIGID COLUMN	URBIS	AXIA 2 S1	VALMONT ST	SHEET STEEL	8	GALVANISED	THAMES
46103550	BURRINGHAM ROAD	Burringham Parish	486781.71	408357.49	12	7011	00203928	01/04/1989 00:00	2	1	BETWEEN 30-50 MPH	VERGE	1000	SINGLE ARM	NOT APPLICABLE	RIGID COLUMN	URBIS	AXIA 2 S1	PETITJEAN	SHEET STEEL	8	GALVANISED	THAMES
46103550	BURRINGHAM ROAD	Burringham Parish	484242.59	410646.66	12	7033	00203950	01/04/1985 00:00	2	1	BETWEEN 30-50 MPH	BACK OF FOOTPATH	800	SINGLE ARM	MID GREY	RIGID COLUMN	URBIS	AXIA 2 S1	PETITJEAN	SHEET STEEL	6	PAINTED	DAER
46103550	BURRINGHAM ROAD	Burringham Parish	486756.73	408357.49	13	7012	00203929	01/04/1989 00:00	2	1	BETWEEN 30-50 MPH	VERGE	1000	SINGLE ARM	NOT APPLICABLE	RIGID COLUMN	URBIS	AXIA 2 S1	PETITJEAN	SHEET STEEL	8	GALVANISED	THAMES
46103550	BURRINGHAM ROAD	Burringham Parish	484241.21	410610.69	13	7034	00203951	01/04/1973 00:00	2	1	BETWEEN 30-50 MPH	BACK OF FOOTPATH	800	SINGLE ARM	MID GREY	RIGID COLUMN	URBIS	AXIA 2 S1	PETITJEAN	SHEET STEEL	6	PAINTED	DAER
46103550	BURRINGHAM ROAD	Burringham Parish	486724.99	408356.94	14	7013	00203930	01/04/1989 00:00	2	1	BETWEEN 30-50 MPH	VERGE	1000	SINGLE ARM	NOT APPLICABLE	RIGID COLUMN	URBIS	AXIA 2 S1	PETITJEAN	SHEET STEEL	8	GALVANISED	THAMES
46103550	BURRINGHAM ROAD	Burringham Parish	484245.34	410578.35	14	7035	00203952	01/04/1973 00:00	2	1	BETWEEN 30-50 MPH	BACK OF FOOTPATH	800	SINGLE ARM	MID GREY	RIGID COLUMN	URBIS	AXIA 2 S1	PETITJEAN	SHEET STEEL	6	PAINTED	DAER
46103550	BURRINGHAM ROAD	Burringham Parish	484246.28	410541.13	15	7036	00203953	01/04/1973 00:00	2	1	BETWEEN 30-50 MPH	BACK OF FOOTPATH	800	SINGLE ARM	MID GREY	RIGID COLUMN	URBIS	AXIA 2 S1	PETITJEAN	SHEET STEEL	6	PAINTED	DAER
46103550	BURRINGHAM ROAD	Burringham Parish	486698.85	408357.52	15	7014	00203931	01/04/1989 00:00	2	1	BETWEEN 30-50 MPH	VERGE	1000	SINGLE ARM	NOT APPLICABLE	RIGID COLUMN	URBIS	AXIA 2 S1	PETITJEAN	SHEET STEEL	8	GALVANISED	THAMES
46103550	BURRINGHAM ROAD	Burringham Parish	486664.49	408356.88	16	7015	00203932	01/04/1989 00:00	2	1	BETWEEN 30-50 MPH	VERGE	1000	SINGLE ARM	NOT APPLICABLE	RIGID COLUMN	URBIS	AXIA 2 S1	PETITJEAN	SHEET STEEL	8	GALVANISED	THAMES
46103550	BURRINGHAM ROAD	Burringham Parish	484244.14	410503.77	16	7037	00203954	25/01/2024 00:00	2	1	BETWEEN 30-50 MPH	BACK OF FOOTPATH	800	SINGLE ARM	NOT APPLICABLE	RIGID COLUMN	URBIS	AXIA 2 S1	MALLATITE	TUBULAR STEEL	6	GALVANISED	TUBULAR
46103550	BURRINGHAM ROAD	Burringham Parish	486628.66	408356.51	17	7016	00203933	01/04/1989 00:00	2	1	BETWEEN 30-50 MPH	VERGE	1000	SINGLE ARM	NOT APPLICABLE	RIGID COLUMN	URBIS	AXIA 2 S1	PETITJEAN	SHEET STEEL	8	GALVANISED	THAMES
46103550	BURRINGHAM ROAD	Burringham Parish	484240.34	410465.71	17	7038	00203955	01/04/1973 00:00	2	1	BETWEEN 30-50 MPH	BACK OF FOOTPATH	800	SINGLE ARM	MID GREY	RIGID COLUMN	URBIS	AXIA 2 S1	PETITJEAN	SHEET STEEL	6	PAINTED	DAER
46103550	BURRINGHAM ROAD	Burringham Parish	484236.01	410428.29	18	7039	00203956	01/04/1973 00:00	2	1	BETWEEN 30-50 MPH	VERGE	800	SINGLE ARM	MID GREY	RIGID COLUMN	URBIS	AXIA 2 S1	PETITJEAN	SHEET STEEL	6	PAINTED	DAER
46103550	BURRINGHAM ROAD	Burringham Parish	486598.44	408355.35	18	7017	00203934	01/04/1989 00:00	2	1	BETWEEN 30-50 MPH	VERGE	1000	SINGLE ARM	NOT APPLICABLE	RIGID COLUMN	URBIS	AXIA 2 S1	PETITJEAN	SHEET STEEL	8	GALVANISED	THAMES
46103550	BURRINGHAM ROAD	Burringham Parish	484234.16	410388.91	19	7040	00203957	01/04/1973 00:00	2	1	BETWEEN 30-50 MPH	VERGE	800	SINGLE ARM	MID GREY	RIGID COLUMN	URBIS	AXIA 2 S1	PETITJEAN	SHEET STEEL	6	PAINTED	DAER
46103550	BURRINGHAM ROAD	Burringham Parish	486567.29	408355.35	19	7018	00203935	01/04/1989 00:00	2	1	BETWEEN 30-50 MPH	VERGE	1000	SINGLE ARM	NOT APPLICABLE	RIGID COLUMN	URBIS	AXIA 2 S1	PETITJEAN	SHEET STEEL	8	GALVANISED	THAMES
46103550	BURRINGHAM ROAD	Burringham Parish	484255.31	410816.25	2	7023	00203940	01/04/2015 00:00	2	1	BETWEEN 30-50 MPH	SPLITTER ISLAND	1000	SINGLE ARM	NOT APPLICABLE	RIGID COLUMN	URBIS	AXIA 2 S1	VALMONT ST	SHEET STEEL	8	GALVANISED	THAMES
46103550	BURRINGHAM ROAD	Burringham Parish	487085.98	408362.28	2	7001	00203918	01/04/1989 00:00	2	1	BETWEEN 30-50 MPH	VERGE	1000	SINGLE ARM	NOT APPLICABLE	RIGID COLUMN	URBIS	AXIA 2 S1	PETITJEAN	SHEET STEEL	8	GALVANISED	THAMES
46103550	BURRINGHAM ROAD	Burringham Parish	486534.76	408355.93	20	7019	00203936	01/04/1989 00:00	2	1	BETWEEN 30-50 MPH	VERGE	1000	SINGLE ARM	NOT APPLICABLE	RIGID COLUMN	URBIS	AXIA 2 S1	PETITJEAN	SHEET STEEL	8	GALVANISED	THAMES
46103550	BURRINGHAM ROAD	Burringham Parish	484231.59	410351.43	20	7041	00203958	01/04/1973 00:00	2	1	BETWEEN 30-50 MPH	BACK OF FOOTPATH	800	SINGLE ARM	MID GREY	RIGID COLUMN	URBIS	AXIA 2 S1	PETITJEAN	SHEET STEEL	6	PAINTED	DAER
46103550	BURRINGHAM ROAD	Burringham Parish	486508.74	408353.99	21	7020	00203937	01/04/1989 00:00	2	1	BETWEEN 30-50 MPH	VERGE	1000	SINGLE ARM	NOT APPLICABLE	RIGID COLUMN	URBIS	AXIA 2 S1	PETITJEAN	SHEET STEEL	8	GALVANISED	THAMES
46103550	BURRINGHAM ROAD	Burringham Parish	484226.73	410307.37	21	7042	00203959	01/04/1973 00:00	2	1	BETWEEN 30-50 MPH	VERGE	800	SINGLE ARM	MID GREY	RIGID COLUMN	URBIS	AXIA 2 S1	PETITJEAN	SHEET STEEL	6	PAINTED	DAER
46103550	BURRINGHAM ROAD	Burringham Parish	484221.06	410270.26	22	7043	00203960	01/04/1973 00:00	2	1	BETWEEN 30-50 MPH	VERGE	800	SINGLE ARM	MID GREY	RIGID COLUMN	URBIS	AXIA 2 S1	PETITJEAN	SHEET STEEL	6	PAINTED	DAER
46103550	BURRINGHAM ROAD	Burringham Parish	486476.21	408353.41	22	7021	00203938	01/04/1989 00:00	2	1	BETWEEN 30-50 MPH	VERGE	1000	SINGLE ARM	NOT APPLICABLE	RIGID COLUMN	URBIS	AXIA 2 S1	PETITJEAN	SHEET STEEL	8	GALVANISED	THAMES
46103550	BURRINGHAM ROAD	Burringham Parish	484214.71	410230.74	23	7044	00203961	01/04/1973 00:00	2	1	BETWEEN 30-50 MPH	VERGE	800	SINGLE ARM	MID GREY	RIGID COLUMN	URBIS	AXIA 2 S1	PETITJEAN	SHEET STEEL	6	PAINTED	DAER
46103550	BURRINGHAM ROAD	Burringham Parish	484205.81	410189.55	24	7045	00203962	01/04/1973 00:00	2	1	BETWEEN 30-50 MPH	VERGE	800	SINGLE ARM	MID GREY	RIGID COLUMN	URBIS	AXIA 2 S1	PETITJEAN	SHEET STEEL	6	PAINTED	DAER
46103550	BURRINGHAM ROAD	Burringham Parish	484193.06	410147.43	25	7046	00203963	01/04/1973 00:00	2	1	BETWEEN 30-50 MPH	BACK OF FOOTPATH	800	SINGLE ARM	MID GREY	RIGID COLUMN	URBIS	AXIA 2 S1	PETITJEAN	SHEET STEEL	6	PAINTED	DAER
46103550	BURRINGHAM ROAD	Burringham Parish	484174.62	410109.3	26	7047	00203964	01/04/1973 00:00	2	1	BETWEEN 30-50 MPH	VERGE	800	SINGLE ARM	MID GREY	RIGID COLUMN	URBIS	AXIA 2 S1	PETITJEAN	SHEET STEEL	6	PAINTED	DAER
46103550	BURRINGHAM ROAD	Burringham Parish	484149.45	410062.19	27	7048	00203965	16/02/2017 00:00	2	1	BETWEEN 30-50 MPH	VERGE	0	POST TOP	NOT APPLICABLE	RIGID COLUMN	URBIS	AXIA 2 S1	MALLATITE	TUBULAR STEEL	6	GALVANISED	TUBULAR
46103550	BURRINGHAM ROAD	Burringham Parish	484141.6	410041.4	28	7049	00203966	01/04/1973 00:00	2	1	BETWEEN 30-50 MPH	VERGE	800	SINGLE ARM	MID GREY	RIGID COLUMN	URBIS	AXIA 2 S1	PETITJEAN	SHEET STEEL	6	PAINTED	DAER
46103550	BURRINGHAM ROAD	Burringham Parish	484117.9	409997.6	29	7050	00203967	01/04/1973 00:00	2	1	BETWEEN 30-50 MPH	VERGE	800	SINGLE ARM	MID GREY	RIGID COLUMN	URBIS	AXIA 2 S1	PETITJEAN	SHEET STEEL	6	PAINTED	DAER
46103550	BURRINGHAM ROAD	Burringham Parish	484249.06	410799.33	3	7024	00203941	01/04/2015 00:00	2	1	BETWEEN 30-50 MPH	VERGE	500	SINGLE ARM	NOT APPLICABLE	RIGID COLUMN	URBIS	AXIA 2 S1	VALMONT ST	SHEET STEEL	8	GALVANISED	THAMES
46103550	BURRINGHAM ROAD	Burringham Parish	487066.52	408362.12	3	7002	00203919	01/04/1989 00:00	2	1	BETWEEN 30-50 MPH	VERGE	1000	SINGLE ARM	NOT APPLICABLE	RIGID COLUMN	URBIS	AXIA 2 S1	PETITJEAN	SHEET STEEL	8	GALVANISED	THAMES
46103550	BURRINGHAM ROAD	Burringham Parish	484100.07	409966.07	30	7051	00203968	01/04/1973 00:00	2	1	BETWEEN 30-50 MPH	VERGE	800	SINGLE ARM	MID GREY	RIGID COLUMN	URBIS	AXIA 2 S1	PETITJEAN	SHEET STEEL	6	PAINTED	DAER
46103550	BURRINGHAM ROAD	Burringham Parish	484081.42	409942.85	31	7052	00203969	12/05/2017 00:00	2	1	BETWEEN 30-50 MPH	VERGE	0	POST TOP	NOT APPLICABLE	RIGID COLUMN	URBIS	AXIA 2 S1	VALMONT ST	TUBULAR STEEL	6	GALVANISED	TUBULAR
46103550	BURRINGHAM ROAD	Burringham Parish	484053.19	409902.37	32	7053	00203970	01/04/1985 00:00	2	1	BETWEEN 30-50 MPH	VERGE	800	SINGLE ARM	NOT APPLICABLE	RIGID COLUMN	URBIS	AXIA 2 S1	PETITJEAN	SHEET STEEL	6	GALVANISED	DAER
46103550	BURRINGHAM ROAD	Burringham Parish	487024.76	408361.53	4	7003	00203920	01/04/1989 00:00	2	1	BETWEEN 30-50 MPH	VERGE	1000	SINGLE ARM	NOT APPLICABLE	RIGID COLUMN	URBIS	AXIA 2 S1	PETITJEAN	SHEET STEEL	8	GALVANISED	THAMES
46103550	BURRINGHAM ROAD	Burringham Parish	484271.13	410803.52	4	7025	00203942	01/04/2015 00:00	2	1	BETWEEN 30-50 MPH	VERGE	500	SINGLE ARM	NOT APPLICABLE	RIGID COLUMN	URBIS	AXIA 2 S1	VALMONT ST	SHEET STEEL	8	NOT APPLICABI	THAMES
46103550	BURRINGHAM ROAD	Burringham Parish	484254.28	410783.08	5	7026	00203943	09/07/2021 00:00	2	1	BETWEEN 30-50 MPH	VERGE	500	SINGLE ARM	NOT APPLICABLE	RIGID COLUMN	URBIS	AXIA 2 S1	MALLATITE	TUBULAR STEEL	8	GALVANISED	TUBULAR
46103550	BURRINGHAM ROAD	Burringham Parish	486986.48	408360.79	5	7004	00203921	01/04/1989 00:00	2	1	BETWEEN 30-50 MPH	VERGE	1000	SINGLE ARM	NOT APPLICABLE	RIGID COLUMN	URBIS	AXIA 2 S1	PETITJEAN	SHEET STEEL	8	GALVANISED	THAMES
46103550	BURRINGHAM ROAD	Burringham Parish	486954.63	408360.03	6	7005	00203922	01/04/1989 00:00	2	1	BETWEEN 30-50 MPH	VERGE	1000	SINGLE ARM	NOT APPLICABLE	RIGID COLUMN	URBIS	AXIA 2 S1	PETITJEAN	SHEET STEEL	8	GALVANISED	THAMES
46103550	BURRINGHAM ROAD	Burringham Parish	484268.07	410783.26	6	7027	00203944	25/01/2024 00:00	2	1	BETWEEN 30-50 MPH	FRONT OF FOOTPATH	1250	SINGLE ARM	NOT APPLICABLE	RIGID COLUMN	URBIS	AXIA 2 S1	MALLATITE	TUBULAR STEEL	8	GALVANISED	TUBULAR
46103550	BURRINGHAM ROAD	Burringham Parish	484257.8	410758.91	7	7028	00203945	01/04/2015 00:00	2	1	BETWEEN 30-50 MPH	VERGE	1000	SINGLE ARM	NOT APPLICABLE	RIGID COLUMN	URBIS	AXIA 2 S1	VALMONT ST	SHEET STEEL	8	NOT APPLICABI	THAMES
46103550	BURRINGHAM ROAD	Burringham Parish	486916.57	408359.24	7	7006	00203923	01/04/1989 00:00	2	1	BETWEEN 30-50 MPH	VERGE	1000	SINGLE ARM	NOT APPLICABLE	RIGID COLUMN	URBIS	AXIA 2 S1	PETITJEAN	SHEET STEEL	8	GALVANISED	THAMES
46103550	BURRINGHAM ROAD	Burringham Parish	484247.9	410763.09	8	7029	00203946	01/04/2015 00:00	2	1	BETWEEN 30-50 MPH	VERGE	500	SINGLE ARM	NOT APPLICABLE	RIGID COLUMN	URBIS	AXIA 2 S1	VALMONT ST	SHEET STEEL	8	GALVANISED	THAMES
46103550	BURRINGHAM ROAD	Burringham Parish	486891.03	408358.16	8	7007	00203924	01/04/1989 00:00	2	1	BETWEEN 30-50 MPH	VERGE	1000	SINGLE ARM	NOT APPLICABLE	RIGID COLUMN	URBIS	AXIA 2 S1	PETITJEAN	SHEET STEEL	8	GALVANISED	THAMES
46103550	BURRINGHAM ROAD	Burringham Parish	484240.42	410736.41	9	7030	00203947	01/04/1989 00:00	2	1	BETWEEN 30-50 MPH	FRONT OF FOOTPATH	1000	SINGLE ARM	NOT APPLICABLE	RIGID COLUMN	URBIS	AXIA 2 S1	PETITJEAN	SHEET STEEL	8	GALVANISED	DAER
46103550	BURRINGHAM ROAD	Burringham Parish	486860.92	408358.64	9FP	7008	00203925	01/04/1989 00:00	2	1	BETWEEN 30-50 MPH	VERGE	1000	SINGLE ARM	NOT APPLICABLE	RIGID COLUMN	URBIS	AXIA 2 S1	PETITJEAN	SHEET STEEL	8	GALVANISED	THAMES
46103557	GLANFORD WAY	Gunness Parish	486790.93	411267.11	1	7000	00203971	01/04/1994 00:00	2	2	LESS THAN 30MPH	BACK OF FOOTPATH	0	POST TOP	LIGHT GREY	RIGID COLUMN	URBIS	AXIA 2 S1	PETITJEAN	SHEET STEEL	5	PAINTED	NIDD
46103557	GLANFORD WAY	Gunness Parish	486770.57	411269.1	2	7001	00203972	01/04/1994 00:00	2	2	LESS THAN 30MPH	BACK OF FOOTPATH	0	POST TOP	LIGHT GREY	RIGID COLUMN	URBIS	AXIA 2 S1	PETITJEAN	SHEET STEEL	5	PAINTED	NIDD
46103557	GLANFORD WAY	Gunness Parish	486749.6	411271.24	3	7002	00203973	01/04/1994 00:00	2	2	LESS THAN 30MPH	BACK OF FOOTPATH	0	POST TOP	LIGHT GREY	RIGID COLUMN	URBIS	AXIA 2 S1	PETITJEAN	SHEET STEEL	5	PAINTED	NIDD
46103557	GLANFORD WAY	Gunness Parish	486758.14	411282.08	4	7003	00203974	01/04/1994 00:00	2	2	LESS THAN 30MPH	BACK OF FOOTPATH	0	POST TOP	LIGHT GREY	RIGID COLUMN	URBIS	AXIA 2 S1	PETITJEAN	SHEET STEEL	5	PAINTED	NIDD
46103565	CADNEY ROAD	Cadney Parish	504625.29	404218.48	1	7000	00203975	07/11/2021 00:00	3	4	BETWEEN 30-50 MPH	ON POLE	300	SINGLE ARM	NOT APPLICABLE	POLE MOUNTED	URBIS	AXIA 2 S1	WOODEN PO	WOOD	5	NOT APPLICABI	PUDSEY DIAMOND
46103565	CADNEY ROAD	Cadney Parish	504250.46	404058.7	10	7009	00203984	01/04/1986 00:00	3	4	BETWEEN 30-50 MPH	ON POLE	300	SINGLE ARM	NOT APPLICABLE	POLE MOUNTED	URBIS	AXIA 2 S1	WOODEN PO	WOOD	5	NOT APPLICABI	Not Applicable
46103565	CADNEY ROAD	Cadney Parish	504212.16	404056.01	11	7010	00203985	01/04/1986 00:00	3	4	BETWEEN 30-50 MPH	ON POLE	300	SINGLE ARM	NOT APPLICABLE	POLE MOUNTED	URBIS	AXIA 2 S1	WOODEN PO	WOOD	5	NOT APPLICABI	Not Applicable
46103565	CADNEY ROAD	Cadney Parish	504169.34	404044.84	12	7011	00203986	01/04/1986 00:00	3	4	BETWEEN 30-50 MPH	ON POLE	300	SINGLE ARM	NOT APPLICABLE	POLE MOUNTED	URBIS	AXIA 2 S1	WOODEN PO	WOOD	5	NOT APPLICABI	Not Applicable
46103565	CADNEY ROAD	Cadney Parish	504128.45	404038.95	13	7012	00203987	01/04/1986 00:00	3	4	BETWEEN 30-50 MPH	ON POLE	300	SINGLE ARM	NOT APPLICABLE	POLE MOUNTED	URBIS	AXIA 2 S1	WOODEN PO	WOOD	5	NOT APPLICABI	Not Applicable
46103565	CADNEY ROAD	Cadney Parish	504045.98	404016.34	14	7013	00203988	01/04/1986 00:00	3	4	BETWEEN 30-50 MPH	ON POLE	300	SINGLE ARM	NOT APPLICABLE	POLE MOUNTED	URBIS	AXIA 2 S1	WOODEN PO	WOOD	5	NOT APPLICABI	Not Applicable
46103565	CADNEY ROAD	Cadney Parish	504582.19	404196.59	2	7001	00203976	01/04/1986 00:00	3	4	BETWEEN 30-50 MPH	ON POLE	500	SINGLE ARM	NOT APPLICABLE	POLE MOUNTED	URBIS	AXIA 2 S1	WOODEN PO	WOOD	5	NOT APPLICABI	Not Applicable
46103565	CADNEY ROAD	Cadney Parish	504545.27	404177.77	3	7002	00203977	01/04/1986 00:00	3	4	BETWEEN 30-50 MPH	ON POLE	500	SINGLE ARM	NOT APPLICABLE	POLE MOUNTED	URBIS	AXIA 2 S1	WOODEN PO	WOOD	5	NOT APPLICABI	Not Applicable
46103565	CADNEY ROAD	Cadney Parish	504502.76	404156.91	4	7003

46103646	FERRY ROAD	Barrow upon Humber Parish	506686.63	421574.76	21	7020	00204131	01/04/1973 00:00	4	1	GREATER THAN 50MPH	VERGE	2000	SINGLE ARM	MID GREY	RIGID COLUMN	URBIS	AXIA 2 S1	PETITJEAN	SHEET STEEL	10	PAINTED	RIBBLE	
46103646	FERRY ROAD	Barrow upon Humber Parish	506691.86	421603.63	22	7021	00204132	01/04/1973 00:00	4	1	GREATER THAN 50MPH	VERGE	2000	SINGLE ARM	MID GREY	RIGID COLUMN	URBIS	AXIA 2 S1	PETITJEAN	SHEET STEEL	10	PAINTED	RIBBLE	
46103646	FERRY ROAD	Barrow upon Humber Parish	506696.58	421632.31	23	7022	00204133	01/04/1973 00:00	4	1	GREATER THAN 50MPH	VERGE	2000	SINGLE ARM	MID GREY	RIGID COLUMN	URBIS	AXIA 2 S1	PETITJEAN	SHEET STEEL	10	PAINTED	RIBBLE	
46103646	FERRY ROAD	Barrow upon Humber Parish	506702.62	421669.57	24	7023	00204134	01/04/1973 00:00	4	1	GREATER THAN 50MPH	VERGE	800	SINGLE ARM	MID GREY	RIGID COLUMN	URBIS	AXIA 2 S1	PETITJEAN	SHEET STEEL	6	PAINTED	DAER	
46103646	FERRY ROAD	Barrow upon Humber Parish	506706.21	421699.76	25	7024	00204135	01/04/1973 00:00	4	1	GREATER THAN 50MPH	VERGE	300	SINGLE ARM	NOT APPLICABLE	RIGID COLUMN	URBIS	AXIA 2 S1	T AND L	TUBULAR STEEL	6	GALVANISED	STEPPED TUBULAR	
46103646	FERRY ROAD	Barrow upon Humber Parish	506663.55	420903.92	3	7006	00204117	14/05/2020 00:00	4	1	LESS THAN 30MPH	BACK OF FOOTPATH	0	POST TOP	NOT APPLICABLE	RIGID COLUMN	URBIS	AXIA 2 S1	MALLATITE	TUBULAR STEEL	6	GALVANISED	TUBULAR	
46103646	FERRY ROAD	Barrow upon Humber Parish	506661.07	420933.66	4	7005	00204116	01/04/1973 00:00	4	1	LESS THAN 30MPH	FRONT OF FOOTPATH	500	SINGLE ARM	MID GREY	RIGID COLUMN	URBIS	AXIA 2 S1	PETITJEAN	SHEET STEEL	5	PAINTED	DAER	
46103646	FERRY ROAD	Barrow upon Humber Parish	506652.82	420988.99	5	7004	00204115	14/05/2020 00:00	4	1	LESS THAN 30MPH	VERGE	0	POST TOP	NOT APPLICABLE	RIGID COLUMN	URBIS	AXIA 2 S1	MALLATITE	TUBULAR STEEL	6	GALVANISED	TUBULAR	
46103646	FERRY ROAD	Barrow upon Humber Parish	506648.52	421033.63	6	7003	00204114	01/04/1973 00:00	4	1	LESS THAN 30MPH	FRONT OF FOOTPATH	500	SINGLE ARM	MID GREY	RIGID COLUMN	URBIS	AXIA 2 S1	PETITJEAN	SHEET STEEL	5	PAINTED	DAER	
46103646	FERRY ROAD	Barrow upon Humber Parish	506634.36	421072.1	7	7002	00204113	02/09/2020 00:00	4	1	LESS THAN 30MPH	ON POLE	300	SINGLE ARM	NOT APPLICABLE	POLE MOUNTED	URBIS	AXIA 2 S1	WOODEN PO	WOOD	5	NOT APPLICABI	Not Applicable	
46103646	FERRY ROAD	Barrow upon Humber Parish	506630.5	421113.34	8	7001	00204112	25/08/2020 00:00	4	1	LESS THAN 30MPH	VERGE	0	POST TOP	NOT APPLICABLE	RIGID COLUMN	URBIS	AXIA 2 S1	MALLATITE	TUBULAR STEEL	6	GALVANISED	TUBULAR	
46103646	FERRY ROAD	Barrow upon Humber Parish	506623.86	421156.91	9	7000	00204111	25/01/2017 00:00	4	1	LESS THAN 30MPH	ON POLE	300	SINGLE ARM	NOT APPLICABLE	POLE MOUNTED	URBIS	AXIA 2 S1	WOODEN PO	WOOD	5	NOT APPLICABI	PUDSEY DIAMOND	
46103650	HEDGEROW CLOSE	Barrow upon Humber Parish	506794.57	421279.92	1	7000	00204136	01/04/1995 00:00	4	1	LESS THAN 30MPH	BACK OF FOOTPATH	0	POST TOP	NOT APPLICABLE	RIGID COLUMN	URBIS	AXIA 2 S1	PETITJEAN	SHEET STEEL	5	GALVANISED	NIDD	
46103650	HEDGEROW CLOSE	Barrow upon Humber Parish	506815.26	421267.08	2	7001	00204137	01/04/1995 00:00	4	1	LESS THAN 30MPH	VERGE	0	POST TOP	NOT APPLICABLE	RIGID COLUMN	URBIS	AXIA 2 S1	PETITJEAN	SHEET STEEL	5	GALVANISED	NIDD	
46103650	HEDGEROW CLOSE	Barrow upon Humber Parish	506834.62	421250.21	3	7002	00204138	01/04/1995 00:00	4	1	LESS THAN 30MPH	VERGE	0	POST TOP	NOT APPLICABLE	RIGID COLUMN	URBIS	AXIA 2 S1	PETITJEAN	SHEET STEEL	5	GALVANISED	NIDD	
46103650	HEDGEROW CLOSE	Barrow upon Humber Parish	506849.57	421262.77	4	7003	00204139	01/04/1995 00:00	4	1	LESS THAN 30MPH	VERGE	0	POST TOP	NOT APPLICABLE	RIGID COLUMN	URBIS	AXIA 2 S1	PETITJEAN	SHEET STEEL	5	GALVANISED	NIDD	
46103651	HIGHFIELDS	Barrow upon Humber Parish	506662.32	421027.7	1	7000	00204140	01/04/1992 00:00	4	1	LESS THAN 30MPH	BACK OF FOOTPATH	0	POST TOP	NOT APPLICABLE	RIGID COLUMN	URBIS	AXIA 2 S1	PETITJEAN	TUBULAR STEEL	5	GALVANISED	STEPPED TUBULAR	
46103651	HIGHFIELDS	Barrow upon Humber Parish	506724.3	420960.87	10	7009	00204149	01/04/1992 00:00	4	1	LESS THAN 30MPH	VERGE	0	POST TOP	NOT APPLICABLE	RIGID COLUMN	URBIS	AXIA 2 S1	T AND L	TUBULAR STEEL	5	GALVANISED	STEPPED TUBULAR	
46103651	HIGHFIELDS	Barrow upon Humber Parish	506687.83	421030.39	2	7001	00204141	01/04/1992 00:00	4	1	LESS THAN 30MPH	BACK OF FOOTPATH	0	POST TOP	NOT APPLICABLE	RIGID COLUMN	URBIS	AXIA 2 S1	PETITJEAN	TUBULAR STEEL	5	GALVANISED	STEPPED TUBULAR	
46103651	HIGHFIELDS	Barrow upon Humber Parish	506710.78	421024.01	3	7002	00204142	01/04/1992 00:00	4	1	LESS THAN 30MPH	BACK OF FOOTPATH	0	POST TOP	NOT APPLICABLE	RIGID COLUMN	URBIS	AXIA 2 S1	PETITJEAN	TUBULAR STEEL	5	GALVANISED	STEPPED TUBULAR	
46103651	HIGHFIELDS	Barrow upon Humber Parish	506736.22	421027.03	4	7003	00204143	01/04/1992 00:00	4	1	LESS THAN 30MPH	BACK OF FOOTPATH	0	POST TOP	NOT APPLICABLE	RIGID COLUMN	URBIS	AXIA 2 S1	PETITJEAN	TUBULAR STEEL	5	GALVANISED	STEPPED TUBULAR	
46103651	HIGHFIELDS	Barrow upon Humber Parish	506753.59	421010.18	5	7004	00204144	01/04/1992 00:00	4	1	LESS THAN 30MPH	BACK OF FOOTPATH	0	POST TOP	NOT APPLICABLE	RIGID COLUMN	URBIS	AXIA 2 S1	PETITJEAN	TUBULAR STEEL	5	GALVANISED	STEPPED TUBULAR	
46103651	HIGHFIELDS	Barrow upon Humber Parish	506774.19	421000.94	6	7005	00204145	01/04/1992 00:00	4	1	LESS THAN 30MPH	VERGE	0	POST TOP	NOT APPLICABLE	RIGID COLUMN	URBIS	AXIA 2 S1	PETITJEAN	TUBULAR STEEL	5	GALVANISED	STEPPED TUBULAR	
46103651	HIGHFIELDS	Barrow upon Humber Parish	506760.71	420984.4	7	7006	00204146	01/04/1992 00:00	4	1	LESS THAN 30MPH	VERGE	0	POST TOP	NOT APPLICABLE	RIGID COLUMN	URBIS	AXIA 2 S1	PETITJEAN	TUBULAR STEEL	5	GALVANISED	STEPPED TUBULAR	
46103651	HIGHFIELDS	Barrow upon Humber Parish	506746.46	420960.04	8	7007	00204147	01/04/1992 00:00	4	1	LESS THAN 30MPH	VERGE	0	POST TOP	NOT APPLICABLE	RIGID COLUMN	URBIS	AXIA 2 S1	T AND L	TUBULAR STEEL	5	GALVANISED	STEPPED TUBULAR	
46103651	HIGHFIELDS	Barrow upon Humber Parish	506727.01	420972.96	9	7008	00204148	01/04/1992 00:00	4	1	LESS THAN 30MPH	VERGE	0	POST TOP	NOT APPLICABLE	RIGID COLUMN	URBIS	AXIA 2 S1	T AND L	TUBULAR STEEL	5	GALVANISED	STEPPED TUBULAR	
46103653	MIDDLEGATE CLOSE	Barrow upon Humber Parish	506754.11	421030.78	1	7000	00204150	01/04/1991 00:00	4	1	LESS THAN 30MPH	BACK OF FOOTPATH	0	POST TOP	NOT APPLICABLE	RIGID COLUMN	URBIS	AXIA 2 S1	PETITJEAN	TUBULAR STEEL	5	GALVANISED	STEPPED TUBULAR	
46103653	MIDDLEGATE CLOSE	Barrow upon Humber Parish	506774.18	421043.15	2	7001	00204151	01/04/1991 00:00	4	1	LESS THAN 30MPH	VERGE	0	POST TOP	NOT APPLICABLE	RIGID COLUMN	URBIS	AXIA 2 S1	PETITJEAN	TUBULAR STEEL	5	GALVANISED	STEPPED TUBULAR	
46103653	MIDDLEGATE CLOSE	Barrow upon Humber Parish	506778.47	421058.04	3	7002	00204152	01/04/1991 00:00	4	1	LESS THAN 30MPH	VERGE	0	POST TOP	NOT APPLICABLE	RIGID COLUMN	URBIS	AXIA 2 S1	PETITJEAN	TUBULAR STEEL	5	GALVANISED	STEPPED TUBULAR	
46103654	MILLFIELDS WAY	Barrow upon Humber Parish	506802.29	421135.89	1	7000	00204153	01/04/1995 00:00	4	1	LESS THAN 30MPH	BACK OF FOOTPATH	0	POST TOP	NOT APPLICABLE	RIGID COLUMN	URBIS	AXIA 2 S1	PETITJEAN	SHEET STEEL	5	GALVANISED	NIDD	
46103654	MILLFIELDS WAY	Barrow upon Humber Parish	506952.94	421239.6	10	7009	00204162	01/04/1992 00:00	4	1	LESS THAN 30MPH	BACK OF FOOTPATH	0	POST TOP	NOT APPLICABLE	RIGID COLUMN	URBIS	AXIA 2 S1	PETITJEAN	TUBULAR STEEL	5	GALVANISED	STEPPED TUBULAR	
46103654	MILLFIELDS WAY	Barrow upon Humber Parish	506964.9	421256.57	11	7010	00204163	01/04/1992 00:00	4	1	LESS THAN 30MPH	BACK OF FOOTPATH	0	POST TOP	NOT APPLICABLE	RIGID COLUMN	URBIS	AXIA 2 S1	PETITJEAN	TUBULAR STEEL	5	GALVANISED	TUBULAR	
46103654	MILLFIELDS WAY	Barrow upon Humber Parish	506979.6	421288.91	12	7011	00204164	01/04/1992 00:00	4	1	LESS THAN 30MPH	BACK OF FOOTPATH	0	POST TOP	NOT APPLICABLE	RIGID COLUMN	URBIS	AXIA 2 S1	PETITJEAN	TUBULAR STEEL	5	GALVANISED	TUBULAR	
46103654	MILLFIELDS WAY	Barrow upon Humber Parish	506991.23	421321.14	13	7012	00204165	01/04/1992 00:00	4	1	LESS THAN 30MPH	BACK OF FOOTPATH	0	POST TOP	NOT APPLICABLE	RIGID COLUMN	URBIS	AXIA 2 S1	PETITJEAN	TUBULAR STEEL	5	GALVANISED	TUBULAR	
46103654	MILLFIELDS WAY	Barrow upon Humber Parish	506813.02	421157.35	2	7001	00204154	01/04/1995 00:00	4	1	LESS THAN 30MPH	BACK OF FOOTPATH	0	POST TOP	NOT APPLICABLE	RIGID COLUMN	URBIS	AXIA 2 S1	PETITJEAN	SHEET STEEL	5	GALVANISED	NIDD	
46103654	MILLFIELDS WAY	Barrow upon Humber Parish	506831	421168.4	3	7002	00204155	01/04/1995 00:00	4	1	LESS THAN 30MPH	BACK OF FOOTPATH	0	POST TOP	NOT APPLICABLE	RIGID COLUMN	URBIS	AXIA 2 S1	PETITJEAN	SHEET STEEL	5	GALVANISED	NIDD	
46103654	MILLFIELDS WAY	Barrow upon Humber Parish	506841	421183.6	4	7003	00204156	01/04/1995 00:00	4	1	LESS THAN 30MPH	BACK OF FOOTPATH	0	POST TOP	NOT APPLICABLE	RIGID COLUMN	URBIS	AXIA 2 S1	PETITJEAN	SHEET STEEL	5	GALVANISED	NIDD	
46103654	MILLFIELDS WAY	Barrow upon Humber Parish	506859.31	421191.16	5	7004	00204157	01/04/1995 00:00	4	1	LESS THAN 30MPH	BACK OF FOOTPATH	0	POST TOP	NOT APPLICABLE	RIGID COLUMN	URBIS	AXIA 2 S1	PETITJEAN	SHEET STEEL	5	GALVANISED	NIDD	
46103654	MILLFIELDS WAY	Barrow upon Humber Parish	506891.08	421202.96	6	7005	00204158	01/04/1992 00:00	4	1	LESS THAN 30MPH	BACK OF FOOTPATH	0	POST TOP	NOT APPLICABLE	RIGID COLUMN	URBIS	AXIA 2 S1	PETITJEAN	TUBULAR STEEL	5	GALVANISED	STEPPED TUBULAR	
46103654	MILLFIELDS WAY	Barrow upon Humber Parish	506902.06	421228.02	7	7006	00204159	01/04/1992 00:00	4	1	LESS THAN 30MPH	BACK OF FOOTPATH	0	POST TOP	NOT APPLICABLE	RIGID COLUMN	URBIS	AXIA 2 S1	PETITJEAN	TUBULAR STEEL	5	GALVANISED	STEPPED TUBULAR	
46103654	MILLFIELDS WAY	Barrow upon Humber Parish	506921.01	421223.23	8	7007	00204160	01/04/1992 00:00	4	1	LESS THAN 30MPH	BACK OF FOOTPATH	0	POST TOP	NOT APPLICABLE	RIGID COLUMN	URBIS	AXIA 2 S1	PETITJEAN	TUBULAR STEEL	5	GALVANISED	STEPPED TUBULAR	
46103654	MILLFIELDS WAY	Barrow upon Humber Parish	506928.4	421235	9	7008	00204161	01/04/1992 00:00	4	1	LESS THAN 30MPH	BACK OF FOOTPATH	0	POST TOP	NOT APPLICABLE	RIGID COLUMN	URBIS	AXIA 2 S1	PETITJEAN	TUBULAR STEEL	5	GALVANISED	STEPPED TUBULAR	
46103655	PADDOCK RISE	Barrow upon Humber Parish	506709.09	421048.8	1	7000	00204166	01/04/1993 00:00	4	1	LESS THAN 30MPH	VERGE	0	POST TOP	NOT APPLICABLE	RIGID COLUMN	URBIS	AXIA 2 S1	PETITJEAN	TUBULAR STEEL	5	GALVANISED	STEPPED TUBULAR	
46103655	PADDOCK RISE	Barrow upon Humber Parish	506714.62	421067.17	2	7001	00204167	01/04/1993 00:00	4	1	LESS THAN 30MPH	VERGE	0	POST TOP	NOT APPLICABLE	RIGID COLUMN	URBIS	AXIA 2 S1	PETITJEAN	TUBULAR STEEL	5	GALVANISED	STEPPED TUBULAR	
46103655	PADDOCK RISE	Barrow upon Humber Parish	506724.48	421081.2	3	7002	00204168	01/04/1993 00:00	4	1	LESS THAN 30MPH	VERGE	0	POST TOP	NOT APPLICABLE	RIGID COLUMN	URBIS	AXIA 2 S1	PETITJEAN	TUBULAR STEEL	5	GALVANISED	STEPPED TUBULAR	
46103656	ROWAN CLOSE	Barrow upon Humber Parish	506763.87	421277.05	1	7000	00204169	01/04/1995 00:00	4	1	LESS THAN 30MPH	BACK OF FOOTPATH	0	POST TOP	NOT APPLICABLE	RIGID COLUMN	URBIS	AXIA 2 S1	PETITJEAN	SHEET STEEL	5	GALVANISED	NIDD	
46103656	ROWAN CLOSE	Barrow upon Humber Parish	506739.66	421288.04	2	7001	00204170	01/04/1995 00:00	4	1	LESS THAN 30MPH	VERGE	0	POST TOP	NOT APPLICABLE	RIGID COLUMN	URBIS	AXIA 2 S1	PETITJEAN	SHEET STEEL	5	GALVANISED	NIDD	
46103656	ROWAN CLOSE	Barrow upon Humber Parish	506726.28	421305.27	3	7002	00204171	01/04/1995 00:00	4	1	LESS THAN 30MPH	VERGE	0	POST TOP	NOT APPLICABLE	RIGID COLUMN	URBIS	AXIA 2 S1	PETITJEAN	SHEET STEEL	5	GALVANISED	NIDD	
46103657	SCHOFIELD CLOSE	Barrow upon Humber Parish	506753.71	421224.92	1	7000	00204172	01/04/1995 00:00	4	1	LESS THAN 30MPH	BACK OF FOOTPATH	0	POST TOP	NOT APPLICABLE	RIGID COLUMN	URBIS	AXIA 2 S1	PETITJEAN	SHEET STEEL	5	GALVANISED	NIDD	
46103657	SCHOFIELD CLOSE	Barrow upon Humber Parish	506719.97	421222.91	2	7001	00204173	01/04/1995 00:00	4	1	LESS THAN 30MPH	VERGE	0	POST TOP	NOT APPLICABLE	RIGID COLUMN	URBIS	AXIA 2 S1	PETITJEAN	SHEET STEEL	5	GALVANISED	NIDD	
46103660	BARROW ROAD	Goxhill Parish	509662.97	420871.77	1	7000	00204174	01/04/1975 00:00	4	4	LESS THAN 30MPH	FRONT OF FOOTPATH	800	SINGLE ARM	MID GREY	RIGID COLUMN	URBIS	AXIA 2 S1	PETITJEAN	SHEET STEEL	6	PAINTED	DAER	
46103660	BARROW ROAD	Goxhill Parish	509143.3	421010.07	10	7009	00204183	01/04/1975 00:00	4	4	GREATER THAN 50MPH	VERGE	500	SINGLE ARM	NOT APPLICABLE	POLE MOUNTED	URBIS	AXIA 2 S1	WOODEN PO	WOOD	5	NOT APPLICABI	Not Applicable	
46103660	BARROW ROAD	Goxhill Parish	509632.42	420879.89	2	7001	00204175	01/04/1975 00:00	4	4	LESS THAN 30MPH	FRONT OF FOOTPATH	800	SINGLE ARM	MID GREY	RIGID COLUMN	URBIS	AXIA 2 S1	PETITJEAN	SHEET STEEL	6	PAINTED	DAER	
46103660	BARROW ROAD	Goxhill Parish	509597.24	420888.85	3	7002	00204176	01/04/1975 00:00	4	4	LESS THAN 30MPH	FRONT OF FOOTPATH	800	SINGLE ARM	MID GREY	RIGID COLUMN	URBIS	AXIA 2 S1	PETITJEAN	SHEET STEEL	6	PAINTED	DAER	
46103660	BARROW ROAD	Goxhill Parish	509560.9	420898.05	4	7003	00204177	01/04/1975 00:00	4	4	LESS THAN 30MPH	FRONT OF FOOTPATH	800	SINGLE ARM	MID GREY	RIGID COLUMN	URBIS	AXIA 2 S1	PETITJEAN	SHEET STEEL	6	PAINTED	DAER	
46103660	BARROW ROAD	Goxhill Parish	509528.49	420906.73	5	7004	00204178	01/04/1975 00:00	4	4	LESS THAN 30MPH	FRONT OF FOOTPATH	800	SINGLE ARM	MID GREY	RIGID COLUMN	URBIS	AXIA 2 S1	PETITJEAN	SHEET STEEL	6	PAINTED	DAER	
46103660	BARROW ROAD	Goxhill Parish	509492.12	420916.04	6	7005	00204179	01/04/2001 00:00	4	4	LESS THAN 30MPH	FRONT OF FOOTPATH	0	POST TOP	NOT APPLICABLE	RIGID COLUMN	URBIS	AXIA 2 S1	MALLATITE	TUBULAR STEEL	6	GALVANISED	STEPPED TUBULAR	
46103660	BARROW ROAD	Goxhill Parish	509457.35	420925.32	7	7006	00204180	01/04/1975 00:00	4	4	LESS THAN 30MPH	FRONT OF FOOTPATH	800	SINGLE ARM	MID GREY	RIGID COLUMN	URBIS	AXIA 2 S1	PETITJEAN	SHEET STEEL	6	PAINTED	DAER	
46103660	BARROW ROAD	Goxhill Parish	509425.13	420933.9	8	7007	00204181	01/04/1975 00:00	4	4	GREATER THAN 50MPH	FRONT OF FOOTPATH	800	SINGLE ARM	MID GREY	RIGID COLUMN	URBIS	AXIA 2 S1	PETITJEAN	SHEET STEEL	6	PAINTED	DAER	
46103660	BARROW ROAD	Goxhill Parish	509342.16	420960.56	9	7008	00204182	01/04/1975 00:00	4	4	GREATER THAN 50MPH	VERGE	300	SINGLE ARM	NOT APPLICABLE	POLE MOUNTED	URBIS	AXIA 2 S1	WOODEN PO	WOOD	5	NOT APPLICABI	Not Applicable	
46103668	KIRMINGTON ROAD	Croxton Parish	509371.05	412463.58	1	7000	00204184	01/04/1988 00:00	3	2	LESS THAN 30MPH	VERGE	800	SINGLE ARM	MID GREY	RIGID COLUMN	URBIS	AXIA 2 S1	PETITJEAN	SHEET STEEL	6	PAINTED	DAER	
46103668	KIRMINGTON ROAD	Croxton Parish	509535.62	412183.95	10	7009	00204193	01/04/1988 00:00	3	2	LESS THAN 30MPH	VERGE	300	SINGLE ARM	NOT APPLICABLE	POLE MOUNTED	URBIS	AXIA 2 S1	WOODEN PO	WOOD	4	NOT APPLICABI	Not Applicable	
46103668	KIRMINGTON ROAD	Croxton Parish	509389.76	412435.91	2	7001	00204185	01/04/1988 00:00	3	2	LESS THAN 30MPH	VERGE	800	SINGLE ARM	MID GREY	RIGID COLUMN	URBIS	AXIA 2 S1	PETITJEAN	SHEET STEEL	6	PAINTED	DAER	
46103668	KIRMINGTON ROAD	Croxton Parish	509408.07	412408.25	3	7002	00204186	01/04/1988 00:00	3	2	LESS THAN 30MPH	VERGE	800	SINGLE ARM	MID GREY	RIGID COLUMN	URBIS	AXIA 2 S1	PETITJEAN	SHEET STEEL	6	PAINTED	DAER	
46103668	KIRMINGTON ROAD	Croxton Parish	509429.19	412374.59	4	7003	00204187	01/04/1988 00:00	3	2	LESS THAN 30MPH	VERGE	800	SINGLE ARM	MID GREY	RIGID COLUMN	URBIS	AXIA 2 S1	PETITJEAN	SHEET STEEL	6	PAINTED	DAER	
46103668	KIRMINGTON ROAD	Croxton Parish	509446.69	412347.74	5	7004	00204188	01/04/1988 00:00	3	2	LESS THAN 30MPH	VERGE	800	SINGLE ARM	MID GREY	RIGID COLUMN	URBIS	AXIA 2 S1	PETITJEAN	SHEET STEEL	6	PAINTED	DAER	
46103668	KIRMINGTON ROAD	Croxton Parish	509466.91	412312.82	6	7005	00204189	01/04/1988 00:00	3	2	LESS THAN 30MPH	VERGE	800	SINGLE ARM	MID GREY	RIGID COLUMN	URBIS	AXIA 2 S1	PETITJEAN	SHEET STEEL	6	PAINTED	DAER	
46103668	KIRMINGTON ROAD	Croxton Parish	509484.4	412280.28	7	7006	00204190	01/04/1988 00:00	3	2	LESS THAN 30MPH	VERGE	800	SINGLE ARM	MID GREY	RIGID COLUMN	URBIS	AXIA 2 S1	PETITJEAN	SHEET STEEL	6	PAINTED	DAER	
46103668	KIRMINGTON ROAD	Croxton Parish	509489.29	412244.88	8	7007	00204191	01/04/1988 00:00	3	2	LESS THAN 30MPH	VERGE	300	SINGLE ARM	NOT APPLICABLE	POLE MOUNTED	URBIS	AXIA 2 S1	WOODEN PO	WOOD	4	NOT APPLICABI	Not Applicable	
46103668	KIRMINGTON ROAD	Croxton Parish	509509.68	412216.84	9	7008	00204192	01/04/1988 00:00	3	2	LESS THAN 30MPH	VERGE	300	SINGLE ARM	NOT APPLICABLE	POLE MOUNTED	URBIS	AXIA 2 S1	WOODEN PO	WOOD	4	NOT APPLICABI	Not Applicable	
46103710	WINDSOR WAY	Barnetby Le Wold Parish	505471.1	410143.5	1	7004	00183968	01/04/1978 00:00	3	2	LESS THAN 30MPH	BACK OF FOOTPATH	0	POST TOP	LIGHT GREY	RIGID COLUMN	URBIS	AXIA 2 S1	PETITJEAN	SHEET STEEL	5	PAINTED	NIDD	
46103710	WINDSOR WAY	Barnetby Le Wold Parish	505523.77	410178.85	1	7000	00204194	01/04/1995 00:00	3	2	LESS THAN 30MPH	VERGE	0	POST TOP	NOT APPLICABLE	RIGID COLUMN	URBIS	AXIA 2 S1	PETITJEAN	SHEET STEEL	5	GALVANISED	NIDD	
46103710	WINDSOR WAY	Barnetby Le Wold Parish	505544.66	410204.36	2	7001	00204195	01/04/1995 00:00	3	2	LESS THAN 30MPH	VERGE	0	POST TOP	NOT APPLICABLE	RIGID COLUMN	URBIS	AXIA 2 S1	PETITJEAN	SHEET STEEL	5	GALVANISED	NIDD	
46103710	WINDSOR WAY	Barnetby Le Wold Parish	505497.12	410159.1	2	7005	00183969	01/04/1978 00:00	3	2	LESS THAN 30MPH	BACK OF FOOTPATH	0	POST TOP	LIGHT GREY	RIGID COLUMN	URBIS	AXIA 2 S1	PETITJEAN	SHEET STEEL	5	PAINTED	NIDD	
46103710	WINDSOR WAY	Barnetby Le Wold Parish	505569.8	410214.27	3	7002	00204196	01/04/1995 00:00	3	2	LESS THAN 30MPH	VERGE	0	POST TOP	NOT APPLICABLE	RIGID COLUMN	URBIS	AXIA 2 S1	PETITJEAN	SHEET STEEL	5	GALVANISED	NIDD	
46103710	WINDSOR WAY	Barnetby Le Wold Parish	505582.51	410232.58	4	7003	00204197	01/04/1995 00:00	3	2	LESS THAN 30MPH	VERGE	0	POST TOP	NOT APPLICABLE	RIGID COLUMN	URBIS	AXIA 2 S1	PETITJEAN	SHEET STEEL	5	GALVANISED	NIDD	
46103712	SCHOOL CLOSE	Epworth Parish	477943.79	403912.79	1	7000	00204198	01/04/1995 00:00	5	3	NOT ON A ROAD	BACK OF FOOTPATH	0	POST TOP	NOT APPLICABLE	RIGID COLUMN	URBIS	AXIA 2 S1	PETITJEAN	SHEET STEEL	5	GALVANISED	NIDD	
46103712	SCHOOL CLOSE	Epworth Parish	477955.64	403927.05	2	7001	00204199	01/04/1995 00:00	5	3	NOT ON A ROAD	BACK OF FOOTPATH	0	POST TOP	NOT APPLICABLE	RIGID COLUMN	URBIS	AXIA 2 S1	PETITJEAN	SHEET STEEL	5	GALVANISED	NIDD	
46103713	GOXHILL ROAD	Barrow upon Humber Parish	507865.72	421371.95	1	7000	00204200	01/04/1975 00:00	4	1	GREATER THAN 50MPH	BACK OF FOOTPATH	1000	SINGLE ARM	NOT APPLICABLE	RIGID COLUMN	URBIS	AXIA 2 S1	PETITJEAN	SHEET STEEL	8	GALVANISED	THAMES	
46103713	GOXHILL ROAD	Barrow upon Humber Parish	508180.89	421269.56	10	7009	00204209	17/04/2020 00:00	4	1	GREATER THAN 50MPH	VERGE	0	POST TOP	NOT APPLICABLE	RIGID COLUMN	URBIS	AXIA 2 S1	MALLATITE	TUBULAR STEEL	6	GALVANISED	TUBULAR	
46103713	GOXHILL ROAD	Barrow upon Humber Parish	508221.06	421258.2	11	7010	00204210	01/04/1975 00:00	4	1	GREATER THAN 50MPH	VERGE	300	SINGLE ARM	MID GREY	RIGID COLUMN	URBIS	AXIA 2 S1	PETITJEAN	SHEET STEEL	5	PAINTED	DAER	
46103713	GOXHILL ROAD	Barrow upon Humber Parish	508257.14	421247.31	12FP	7011	00204211	01/04/1975 00:00	4	1	GREATER THAN 50MPH	VERGE	300	SINGLE ARM	MID GREY	RIGID COLUMN	URBIS	AXIA 2 S1	PETITJEAN	SHEET STEEL	5	PAINTED	DAER	
46103713	GOXHILL ROAD	Barrow upon Humber Parish	508294.97	421235.66	13	7012	00204212	24/07/2018 00:00	4	1	GREATER THAN 50MPH	ON POLE	300	SINGLE ARM	NOT APPLICABLE	POLE MOUNTED	URBIS	AXIA 2 S1	WOODEN PO	ALUMINIUM	5	NOT APPLICABI	PUDSEY DIAMOND	
46103713	GOXHILL ROAD	Barrow upon Humber Parish	508338.52	421222.75	14	7013	00204213	24/07/2018 00:00	4	1	GREATER THAN 50MPH	ON POLE	300	SINGLE ARM	NOT APPLICABLE	POLE MOUNTED	URBIS	AXIA 2 S1	WOODEN PO	WOOD	5	NOT APPLICABI	PUDSEY DIAMOND	
46103713	GOXHILL ROAD	Barrow upon Humber Parish	508380.62	421210.57	15	7014	00204214	24/07/2018 00:00	4	1	GREATER THAN 50MPH	ON POLE	300	SINGLE ARM	NOT APPLICABLE	POLE MOUNTED	URBIS	AXIA 2 S1	WOODEN PO	WOOD	5	NOT APPLICABI	PUDSEY DIAMOND	
46103713	GOXHILL ROAD	Barrow upon Humber Parish	508426.58	421197.76	16	7015	00204215	24/07/2018 00:00	4	1	GREATER THAN 50MPH	ON POLE	300	SINGLE ARM	NOT APPLICABLE	POLE MOUNTED	URBIS	AXIA 2 S1	WOODEN PO	WOOD	5	NOT APPLICABI

46103852	THE NARROW BOATS	Broughton Parish	499283.74	407179.58	3	7002	00204366	11/03/2022 00:00	1	1	LESS THAN 30MPH	VERGE	0	POST TOP	NOT APPLICABLE	RIGID COLUMN	URBIS	AXIA 2 S1	MALLATITE	TUBULAR STEEL	6	GALVANISED	TUBULAR	
46103852	THE NARROW BOATS	Broughton Parish	499279.94	407210.16	4	7003	00204367	01/04/2002 00:00	1	1	LESS THAN 30MPH	VERGE	0	POST TOP	NOT APPLICABLE	RIGID COLUMN	URBIS	AXIA 2 S1	PETITJEAN	TUBULAR STEEL	5	GALVANISED	STEPPED TUBULAR	
46103852	THE NARROW BOATS	Broughton Parish	499264.38	407211.74	5	7004	00204368	01/04/2002 00:00	1	1	LESS THAN 30MPH	VERGE	0	POST TOP	NOT APPLICABLE	RIGID COLUMN	URBIS	AXIA 2 S1	PETITJEAN	TUBULAR STEEL	5	GALVANISED	STEPPED TUBULAR	
46103853	EARLS WALK	Scunthorpe	489816.49	410495.64	10E	7014	00204383	01/04/2002 00:00	2	4	NOT ON A ROAD	OTHER	0	POST TOP	NOT APPLICABLE	MID HINGED	URBIS	AXIA 2 S1	PETITJEAN	SHEET STEEL	5	GALVANISED	LEVEN	
46103853	EARLS WALK	Scunthorpe	489812.7	410569.77	1B	7000	00204369	01/04/2001 00:00	2	4	LESS THAN 30MPH	VERGE	300	SINGLE ARM	NOT APPLICABLE	RIGID COLUMN	URBIS	AXIA 2 S1	MALLATITE	TUBULAR STEEL	6	GALVANISED	STEPPED TUBULAR	
46103853	EARLS WALK	Scunthorpe	489915.14	410488.49	1T	7001	00204370	01/04/2002 00:00	2	4	NOT ON A ROAD	BACK OF FOOTPATH	0	POST TOP	NOT APPLICABLE	MID HINGED	URBIS	AXIA 2 S1	PETITJEAN	SHEET STEEL	5	GALVANISED	LEVEN	
46103853	EARLS WALK	Scunthorpe	489837.68	410571.82	2B	7002	00204371	01/04/2001 00:00	2	4	LESS THAN 30MPH	VERGE	300	SINGLE ARM	NOT APPLICABLE	RIGID COLUMN	URBIS	AXIA 2 S1	MALLATITE	TUBULAR STEEL	6	GALVANISED	STEPPED TUBULAR	
46103853	EARLS WALK	Scunthorpe	489912.43	410515.9	2T	7003	00204372	01/04/2002 00:00	2	4	NOT ON A ROAD	BACK OF FOOTPATH	0	POST TOP	NOT APPLICABLE	MID HINGED	URBIS	AXIA 2 S1	PETITJEAN	SHEET STEEL	5	GALVANISED	LEVEN	
46103853	EARLS WALK	Scunthorpe	489838.8	410595.42	3B	7004	00204373	01/04/2001 00:00	2	4	LESS THAN 30MPH	BACK OF FOOTPATH	300	SINGLE ARM	NOT APPLICABLE	RIGID COLUMN	URBIS	AXIA 2 S1	MALLATITE	TUBULAR STEEL	6	GALVANISED	STEPPED TUBULAR	
46103853	EARLS WALK	Scunthorpe	489909.31	410536.39	3T	7007	00204376	01/04/2002 00:00	2	4	NOT ON A ROAD	BACK OF FOOTPATH	0	POST TOP	NOT APPLICABLE	MID HINGED	URBIS	AXIA 2 S1	PETITJEAN	SHEET STEEL	5	GALVANISED	LEVEN	
46103853	EARLS WALK	Scunthorpe	489853.69	410569.89	4B	7005	00204374	01/04/2001 00:00	2	4	LESS THAN 30MPH	BACK OF FOOTPATH	300	SINGLE ARM	NOT APPLICABLE	RIGID COLUMN	URBIS	AXIA 2 S1	MALLATITE	TUBULAR STEEL	6	GALVANISED	STEPPED TUBULAR	
46103853	EARLS WALK	Scunthorpe	489827.95	410538.07	4E	7017	04200801	01/04/2002 00:00	2	4	NOT ON A ROAD	BACK OF FOOTPATH	0	POST TOP	NOT APPLICABLE	MID HINGED	URBIS	AXIA 2 S1	PETITJEAN	SHEET STEEL	5	GALVANISED	LEVEN	
46103853	EARLS WALK	Scunthorpe	489882.46	410533.82	4T	7006	00204375	01/04/2002 00:00	2	4	NOT ON A ROAD	BACK OF FOOTPATH	0	POST TOP	NOT APPLICABLE	MID HINGED	URBIS	AXIA 2 S1	PETITJEAN	SHEET STEEL	5	GALVANISED	LEVEN	
46103853	EARLS WALK	Scunthorpe	489829.5	410553.1	5E	7008	00204377	01/04/2002 00:00	2	4	NOT ON A ROAD	BACK OF FOOTPATH	0	POST TOP	NOT APPLICABLE	MID HINGED	URBIS	AXIA 2 S1	PETITJEAN	SHEET STEEL	5	GALVANISED	LEVEN	
46103853	EARLS WALK	Scunthorpe	489813.29	410554.61	6E	7009	00204378	01/04/2002 00:00	2	4	NOT ON A ROAD	BACK OF FOOTPATH	0	POST TOP	NOT APPLICABLE	MID HINGED	URBIS	AXIA 2 S1	PETITJEAN	SHEET STEEL	5	GALVANISED	LEVEN	
46103853	EARLS WALK	Scunthorpe	489884.41	410508.72	6T	7010	00204379	01/04/2002 00:00	2	4	NOT ON A ROAD	BACK OF FOOTPATH	0	POST TOP	NOT APPLICABLE	MID HINGED	URBIS	AXIA 2 S1	PETITJEAN	SHEET STEEL	5	GALVANISED	LEVEN	
46103853	EARLS WALK	Scunthorpe	489841.11	410535.31	7E	7016	04200800	01/04/2002 00:00	2	4	NOT ON A ROAD	BACK OF FOOTPATH	0	POST TOP	NOT APPLICABLE	MID HINGED	URBIS	AXIA 2 S1	PETITJEAN	SHEET STEEL	5	GALVANISED	LEVEN	
46103853	EARLS WALK	Scunthorpe	489863.42	410537.11	8E	7011	00204380	01/04/2002 00:00	2	4	NOT ON A ROAD	BACK OF FOOTPATH	0	POST TOP	NOT APPLICABLE	MID HINGED	URBIS	AXIA 2 S1	PETITJEAN	SHEET STEEL	5	GALVANISED	LEVEN	
46103853	EARLS WALK	Scunthorpe	489814.31	410524.38	9E	7015	00204384	01/04/2002 00:00	2	4	NOT ON A ROAD	OTHER	0	POST TOP	NOT APPLICABLE	MID HINGED	URBIS	AXIA 2 S1	PETITJEAN	SHEET STEEL	5	GALVANISED	LEVEN	
46103857	MANOR GARDENS	Crowle Parish	477172.6	412847.7	1	7000	00204385	01/04/1980 00:00	5	1	LESS THAN 30MPH	VERGE	0	POST TOP	NOT APPLICABLE	RIGID COLUMN	URBIS	AXIA 2 S1	PETITJEAN	SHEET STEEL	5	GALVANISED	DAER	
46103857	MANOR GARDENS	Crowle Parish	477137.8	412837.6	2	7001	00204386	01/04/1980 00:00	5	1	LESS THAN 30MPH	VERGE	0	POST TOP	NOT APPLICABLE	RIGID COLUMN	URBIS	AXIA 2 S1	PETITJEAN	STEEL	6	GALVANISED	NIDD	
46103857	MANOR GARDENS	Crowle Parish	477124	412848	3	7002	00204387	01/05/2024 00:00	5	1	LESS THAN 30MPH	BACK OF FOOTPATH	0	POST TOP	NOT APPLICABLE	RIGID COLUMN	URBIS	AXIA 2 S1	MALLATITE	TUBULAR STEEL	6	GALVANISED	TUBULAR	
46103862	HALL LANE	Elsham Parish	503414.43	412185.23	1	7000	00204388	01/04/1980 00:00	6	1	LESS THAN 30MPH	ON POLE	300	SINGLE ARM	NOT APPLICABLE	POLE MOUNTED	URBIS	AXIA 2 S1	WOODEN PO	WOOD	5	NOT APPLICABI	Not Applicable	
46103862	HALL LANE	Elsham Parish	503378.94	412149.31	2	7001	00204389	01/04/1980 00:00	6	1	LESS THAN 30MPH	ON POLE	300	SINGLE ARM	NOT APPLICABLE	POLE MOUNTED	URBIS	AXIA 2 S1	WOODEN PO	WOOD	5	NOT APPLICABI	Not Applicable	
46103862	HALL LANE	Elsham Parish	503344.4	412111.93	3	7002	00204390	01/04/1980 00:00	6	1	LESS THAN 30MPH	ON POLE	300	SINGLE ARM	NOT APPLICABLE	POLE MOUNTED	URBIS	AXIA 2 S1	WOODEN PO	WOOD	5	NOT APPLICABI	Not Applicable	
46103862	HALL LANE	Elsham Parish	503310.69	412074.86	4	7003	00204391	01/04/1980 00:00	6	1	LESS THAN 30MPH	ON POLE	300	SINGLE ARM	NOT APPLICABLE	POLE MOUNTED	URBIS	AXIA 2 S1	WOODEN PO	WOOD	5	NOT APPLICABI	Not Applicable	
46103864	SOUTH FURLONG CROFT	Epworth Parish	478419.45	403543.36	1	7000	00204392	01/04/1995 00:00	5	3	LESS THAN 30MPH	VERGE	0	POST TOP	NOT APPLICABLE	RIGID COLUMN	URBIS	AXIA 2 S1	PETITJEAN	SHEET STEEL	5	GALVANISED	NIDD	
46103864	SOUTH FURLONG CROFT	Epworth Parish	478407.57	403516.83	2	7001	00204393	01/04/1995 00:00	5	3	LESS THAN 30MPH	VERGE	0	POST TOP	NOT APPLICABLE	RIGID COLUMN	URBIS	AXIA 2 S1	PETITJEAN	SHEET STEEL	5	GALVANISED	NIDD	
46103864	SOUTH FURLONG CROFT	Epworth Parish	478413.06	403490.68	3	7002	00204394	01/04/1995 00:00	5	3	LESS THAN 30MPH	VERGE	0	POST TOP	NOT APPLICABLE	RIGID COLUMN	URBIS	AXIA 2 S1	PETITJEAN	SHEET STEEL	5	GALVANISED	NIDD	
46103864	SOUTH FURLONG CROFT	Epworth Parish	478397.1	403467.11	4	7003	00204395	01/04/1995 00:00	5	3	LESS THAN 30MPH	VERGE	0	POST TOP	NOT APPLICABLE	RIGID COLUMN	URBIS	AXIA 2 S1	PETITJEAN	SHEET STEEL	5	GALVANISED	NIDD	
46103864	SOUTH FURLONG CROFT	Epworth Parish	478372.24	403467.37	5	7004	00204396	01/04/1995 00:00	5	3	LESS THAN 30MPH	VERGE	0	POST TOP	NOT APPLICABLE	RIGID COLUMN	URBIS	AXIA 2 S1	PETITJEAN	SHEET STEEL	5	GALVANISED	NIDD	
46103864	SOUTH FURLONG CROFT	Epworth Parish	478403.97	403452.3	6	7005	00204397	01/04/1995 00:00	5	3	LESS THAN 30MPH	VERGE	0	POST TOP	NOT APPLICABLE	RIGID COLUMN	URBIS	AXIA 2 S1	PETITJEAN	SHEET STEEL	5	GALVANISED	NIDD	
46103864	SOUTH FURLONG CROFT	Epworth Parish	478396.3	403429.29	7	7006	00204398	01/04/1995 00:00	5	3	LESS THAN 30MPH	VERGE	0	POST TOP	NOT APPLICABLE	RIGID COLUMN	URBIS	AXIA 2 S1	PETITJEAN	SHEET STEEL	5	GALVANISED	NIDD	
46103867	GREENFIELDS	Goxhill Parish	510138.68	421455.16	1	7000	00204399	01/04/2004 00:00	4	4	NOT ON A ROAD	BACK OF FOOTPATH	0	POST TOP	NOT APPLICABLE	MID HINGED	URBIS	AXIA 2 S1	PETITJEAN	SHEET STEEL	5	GALVANISED	LEVEN	
46103867	GREENFIELDS	Goxhill Parish	510085.61	421430.15	10	7009	00204408	01/04/2000 00:00	4	4	NOT ON A ROAD	BACK OF FOOTPATH	0	POST TOP	NOT APPLICABLE	MID HINGED	URBIS	AXIA 2 S1	PETITJEAN	SHEET STEEL	5	GALVANISED	LEVEN	
46103867	GREENFIELDS	Goxhill Parish	510075.05	421441.66	11	7010	00204409	01/04/2000 00:00	4	4	NOT ON A ROAD	BACK OF FOOTPATH	0	POST TOP	NOT APPLICABLE	MID HINGED	URBIS	AXIA 2 S1	PETITJEAN	SHEET STEEL	5	GALVANISED	LEVEN	
46103867	GREENFIELDS	Goxhill Parish	510112.33	421455.57	2	7001	00204400	01/04/2004 00:00	4	4	NOT ON A ROAD	BACK OF FOOTPATH	0	POST TOP	NOT APPLICABLE	MID HINGED	URBIS	AXIA 2 S1	PETITJEAN	SHEET STEEL	5	GALVANISED	LEVEN	
46103867	GREENFIELDS	Goxhill Parish	510106.21	421477.32	3	7002	00204401	01/04/2004 00:00	4	4	NOT ON A ROAD	BACK OF FOOTPATH	0	POST TOP	NOT APPLICABLE	MID HINGED	URBIS	AXIA 2 S1	PETITJEAN	SHEET STEEL	5	GALVANISED	LEVEN	
46103867	GREENFIELDS	Goxhill Parish	510088.49	421498.53	4	7003	00204402	01/04/2004 00:00	4	4	NOT ON A ROAD	BACK OF FOOTPATH	0	POST TOP	NOT APPLICABLE	MID HINGED	URBIS	AXIA 2 S1	PETITJEAN	SHEET STEEL	5	GALVANISED	LEVEN	
46103867	GREENFIELDS	Goxhill Parish	510072.66	421523.56	5	7004	00204403	01/04/2004 00:00	4	4	NOT ON A ROAD	BACK OF FOOTPATH	0	POST TOP	NOT APPLICABLE	MID HINGED	URBIS	AXIA 2 S1	PETITJEAN	SHEET STEEL	5	GALVANISED	LEVEN	
46103867	GREENFIELDS	Goxhill Parish	510082.95	421471.56	6	7005	00204404	01/04/2004 00:00	4	4	NOT ON A ROAD	BACK OF FOOTPATH	0	POST TOP	NOT APPLICABLE	MID HINGED	URBIS	AXIA 2 S1	PETITJEAN	SHEET STEEL	5	GALVANISED	LEVEN	
46103867	GREENFIELDS	Goxhill Parish	510063.07	421450.55	7	7006	00204405	01/04/2004 00:00	4	4	NOT ON A ROAD	BACK OF FOOTPATH	0	POST TOP	NOT APPLICABLE	MID HINGED	URBIS	AXIA 2 S1	PETITJEAN	SHEET STEEL	5	GALVANISED	LEVEN	
46103867	GREENFIELDS	Goxhill Parish	510106.58	421430.74	8	7007	00204406	01/04/2004 00:00	4	4	NOT ON A ROAD	BACK OF FOOTPATH	0	POST TOP	NOT APPLICABLE	MID HINGED	URBIS	AXIA 2 S1	PETITJEAN	SHEET STEEL	5	GALVANISED	LEVEN	
46103867	GREENFIELDS	Goxhill Parish	510086.21	421414.78	9	7008	00204407	01/04/2004 00:00	4	4	NOT ON A ROAD	BACK OF FOOTPATH	0	POST TOP	NOT APPLICABLE	MID HINGED	URBIS	AXIA 2 S1	PETITJEAN	SHEET STEEL	5	GALVANISED	LEVEN	
46103874	LOWCROFT MEADOW	Haxey Parish	477376.68	399938.86	1	7000	00204410	13/09/2018 00:00	6	2	LESS THAN 30MPH	VERGE	0	POST TOP	NOT APPLICABLE	RIGID COLUMN	URBIS	AXIA 2 S1	MALLATITE	TUBULAR STEEL	6	GALVANISED	TUBULAR	
46103874	LOWCROFT MEADOW	Haxey Parish	477402.05	399946.22	2	7001	00204411	01/04/1988 00:00	6	2	LESS THAN 30MPH	VERGE	0	POST TOP	NOT APPLICABLE	RIGID COLUMN	URBIS	AXIA 2 S1	PETITJEAN	SHEET STEEL	5	GALVANISED	NIDD	
46103874	LOWCROFT MEADOW	Haxey Parish	477406.62	399965.85	3	7002	00204412	01/04/1988 00:00	6	2	LESS THAN 30MPH	VERGE	0	POST TOP	NOT APPLICABLE	RIGID COLUMN	URBIS	AXIA 2 S1	PETITJEAN	SHEET STEEL	5	GALVANISED	NIDD	
46103874	LOWCROFT MEADOW	Haxey Parish	477400.48	400006.13	4	7003	00204413	01/04/1988 00:00	6	2	LESS THAN 30MPH	VERGE	0	POST TOP	NOT APPLICABLE	RIGID COLUMN	URBIS	AXIA 2 S1	PETITJEAN	SHEET STEEL	5	GALVANISED	NIDD	
46103874	LOWCROFT MEADOW	Haxey Parish	477419.46	399937.38	5	7004	00204414	01/04/1988 00:00	6	2	LESS THAN 30MPH	VERGE	0	POST TOP	NOT APPLICABLE	RIGID COLUMN	URBIS	AXIA 2 S1	PETITJEAN	SHEET STEEL	5	GALVANISED	NIDD	
46103874	LOWCROFT MEADOW	Haxey Parish	477425.12	399925.73	6	7005	00204415	01/04/1988 00:00	6	2	LESS THAN 30MPH	VERGE	0	POST TOP	NOT APPLICABLE	RIGID COLUMN	URBIS	AXIA 2 S1	PETITJEAN	SHEET STEEL	5	GALVANISED	NIDD	
46103874	LOWCROFT MEADOW	Haxey Parish	477423.77	399895.09	7	7006	00204416	01/04/1988 00:00	6	2	LESS THAN 30MPH	VERGE	0	POST TOP	NOT APPLICABLE	RIGID COLUMN	URBIS	AXIA 2 S1	PETITJEAN	SHEET STEEL	5	GALVANISED	NIDD	
46103875	THE GOLDINGS	Haxey Parish	477576.81	399521.14	1	7000	00204417	01/04/1993 00:00	6	2	LESS THAN 30MPH	VERGE	0	POST TOP	NOT APPLICABLE	RIGID COLUMN	URBIS	AXIA 2 S1	PETITJEAN	SHEET STEEL	5	GALVANISED	DAER	
46103875	THE GOLDINGS	Haxey Parish	477592.37	399527.89	2	7001	00204418	01/04/1993 00:00	6	2	LESS THAN 30MPH	VERGE	0	POST TOP	NOT APPLICABLE	RIGID COLUMN	URBIS	AXIA 2 S1	PETITJEAN	SHEET STEEL	5	GALVANISED	DAER	
46103875	THE GOLDINGS	Haxey Parish	477612.53	399514.45	3	7002	00204419	01/04/1993 00:00	6	2	LESS THAN 30MPH	VERGE	0	POST TOP	NOT APPLICABLE	RIGID COLUMN	URBIS	AXIA 2 S1	PETITJEAN	SHEET STEEL	5	GALVANISED	DAER	
46103877	FUCHSIA CROFT	Scunthorpe	488755.99	410702.1	1	7000	00204420	01/04/1993 00:00	6	3	LESS THAN 30MPH	VERGE	800	SINGLE ARM	NOT APPLICABLE	RIGID COLUMN	URBIS	AXIA 2 S1	PETITJEAN	SHEET STEEL	6	GALVANISED	DAER	
46103877	FUCHSIA CROFT	Scunthorpe	488752.95	410678.27	2	7001	00204421	01/04/1993 00:00	6	3	LESS THAN 30MPH	VERGE	800	SINGLE ARM	NOT APPLICABLE	RIGID COLUMN	URBIS	AXIA 2 S1	PETITJEAN	SHEET STEEL	6	GALVANISED	DAER	
46103878	ETHEL COURT	Scunthorpe	489686.4	411142.69	1	7000	00204422	01/04/2000 00:00	4	4	LESS THAN 30MPH	BACK OF FOOTPATH	0	POST TOP	MID GREY	RIGID COLUMN	URBIS	AXIA 2 S1	OTHER	TUBULAR STEEL	4	PAINTED	OTHER	
46103878	ETHEL COURT	Scunthorpe	489668.39	411159.29	2	7001	00204423	01/04/2001 00:00	4	4	LESS THAN 30MPH	VERGE	300	SINGLE ARM	NOT APPLICABLE	RIGID COLUMN	URBIS	AXIA 2 S1	MALLATITE	TUBULAR STEEL	6	GALVANISED	STEPPED TUBULAR	
46103878	ETHEL COURT	Scunthorpe	489682.64	411180.81	3	7002	00204424	01/04/2001 00:00	4	4	LESS THAN 30MPH	BACK OF FOOTPATH	300	SINGLE ARM	NOT APPLICABLE	RIGID COLUMN	URBIS	AXIA 2 S1	MALLATITE	TUBULAR STEEL	6	GALVANISED	STEPPED TUBULAR	
46103878	ETHEL COURT	Scunthorpe	489675.86	411204.26	4	7003	00204425	01/04/2001 00:00	4	4	LESS THAN 30MPH	BACK OF FOOTPATH	300	SINGLE ARM	NOT APPLICABLE	RIGID COLUMN	URBIS	AXIA 2 S1	MALLATITE	TUBULAR STEEL	6	GALVANISED	STEPPED TUBULAR	
46103878	ETHEL COURT	Scunthorpe	489661.48	411226.89	5	7004	00204426	01/04/2001 00:00	4	4	LESS THAN 30MPH	BACK OF FOOTPATH	300	SINGLE ARM	NOT APPLICABLE	RIGID COLUMN	URBIS	AXIA 2 S1	MALLATITE	TUBULAR STEEL	6	GALVANISED	STEPPED TUBULAR	
46103878	ETHEL COURT	Scunthorpe	489670.63	411250.48	6	7005	00204427	01/04/2001 00:00	4	4	LESS THAN 30MPH	VERGE	300	SINGLE ARM	NOT APPLICABLE	RIGID COLUMN	URBIS	AXIA 2 S1	MALLATITE	TUBULAR STEEL	6	GALVANISED	STEPPED TUBULAR	
46103878	ETHEL COURT	Scunthorpe	489685.32	411240.36	7	7006	00204428	01/04/1995 00:00	4	4	NOT ON A ROAD	BACK OF FOOTPATH	0	POST TOP	NOT APPLICABLE	RIGID COLUMN	URBIS	AXIA 2 S1	MALLATITE	TUBULAR STEEL	5	GALVANISED	STEPPED TUBULAR	
46103900	ASH TREE DRIVE	Haxey Parish	477336.57	399828.85	1	7000	00204429	13/05/2018 00:00	6	2	LESS THAN 30MPH	BACK OF FOOTPATH	0	POST TOP	NOT APPLICABLE	RIGID COLUMN	URBIS	AXIA 2 S1	MALLATITE	TUBULAR STEEL	6	GALVANISED	TUBULAR	
46103900	ASH TREE DRIVE	Haxey Parish	477390.69	399840.93	2	7001	00204430	30/08/2018 00:00	6	2	LESS THAN 30MPH	BACK OF FOOTPATH	0	POST TOP	NOT APPLICABLE	RIGID COLUMN	URBIS	AXIA 2 S1	VALMONT ST	TUBULAR STEEL	6	GALVANISED	TUBULAR	
46103900	ASH TREE DRIVE	Haxey Parish	477378.78	399893.21	3	7002	00204431	30/08/2018 00:00	6	2	LESS THAN 30MPH	BACK OF FOOTPATH	0	POST TOP	NOT APPLICABLE	RIGID COLUMN	URBIS	AXIA 2 S1	VALMONT ST	TUBULAR STEEL	6	GALVANISED	TUBULAR	
46103900	ASH TREE DRIVE	Haxey Parish	477369.92	399915.39	4	7003	00204432	30/08/2018 00:00	6	2	LESS THAN 30MPH	BACK OF FOOTPATH	0	POST TOP	NOT APPLICABLE	RIGID COLUMN	URBIS	AXIA 2 S1	VALMONT ST	TUBULAR STEEL	6	GALVANISED	TUBULAR	
46103900	ASH TREE DRIVE	Haxey Parish	477358.48	399942.53	5	7004	00204433	30/08/2018 00:00	6	2	LESS THAN 30MPH	BACK OF FOOTPATH	0	POST TOP	NOT APPLICABLE	RIGID COLUMN	URBIS	AXIA 2 S1	VALMONT ST	TUBULAR STEEL	6	GALVANISED	TUBULAR	
46103900	ASH TREE DRIVE	Haxey Parish	477352.74	399974.09	6	7005	00204434	30/08/2018 00:00	6	2	LESS THAN 30MPH	BACK OF FOOTPATH	0	POST TOP	NOT APPLICABLE	RIGID COLUMN	URBIS	AXIA 2 S1	VALMONT ST	TUBULAR STEEL	6	GALVANISED	TUBULAR	
46103901	FIELD VIEW	Haxey Parish	477573.47	399474.18	1	7000	00204435	01/04/1993 00:00	6	2	LESS THAN 30MPH	VERGE	0	POST TOP	NOT APPLICABLE	RIGID COLUMN	URBIS	AXIA 2 S1	PETITJEAN	SHEET STEEL	5	GALVANISED	DAER	
46103901	FIELD VIEW	Haxey Parish	477561.96	399466.11	2	7001	00204436	01/04/1993 00:00	6	2	LESS THAN 30MPH	VERGE	0	POST TOP	NOT APPLICABLE	RIGID COLUMN	URBIS	AXIA 2 S1	PETITJEAN	SHEET STEEL	5	GALVANISED	DAER	
46103901	FIELD VIEW	Haxey Parish	477541.72	399479.74	3	7002	00204437	01/04/1993 00:00	6	2	LESS THAN 30MPH	VERGE	0	POST TOP	NOT APPLICABLE	RIGID COLUMN	URBIS	AXIA 2 S1	PETITJEAN	SHEET STEEL	5	GALVANISED	DAER	
46103905	HOPGARTH	Haxey Parish	477668.51	399483.22	1	7000	00204438	01/04/1993 00:00	6	2	LESS THAN 30MPH	BACK OF FOOTPATH	0	POST TOP	NOT APPLICABLE	RIGID COLUMN	URBIS	AXIA 2 S1	PETITJEAN	SHEET STEEL	5	GALVANISED	DAER	
46103905	HOPGARTH	Haxey Parish	477537.37	399589.12	10	7009	00204447	01/04/1993 00:00	6	2	LESS THAN 30MPH	VERGE	0	POST TOP	NOT APPLICABLE	RIGID COLUMN	URBIS	AXIA 2 S1	PETITJEAN	SHEET STEEL	5	GALVANISED	DAER	
46103905	HOPGARTH	Haxey Parish	477649.96	399482.95	2	7001	00204439	01/04/1993 00:00	6	2	LESS THAN 30MPH	BACK OF FOOTPATH	0	POST TOP	NOT APPLICABLE	RIGID COLUMN	URBIS	AXIA 2 S1	PETITJEAN	SHEET STEEL	5	GALVANISED	DAER	
46103905	HOPGARTH	Haxey Parish	477616.41	399485.48	3	7002	00204440	01/04/1993 00:00	6	2	LESS THAN 30MPH	BACK OF FOOTPATH	0	POST TOP	NOT APPLICABLE	RIGID COLUMN	URBIS	AXIA 2 S1	PETITJEAN	SHEET STEEL	5	GALVANISED	DAER	
46103905	HOPGARTH	Haxey Parish	477596.52	399472.04	4	7003	00204441	01/04/1993 00:00	6	2	LESS THAN 30MPH	BACK OF FOOTPATH	0	POST TOP	NOT APPLICABLE	RIGID COLUMN	URBIS	AXIA 2 S1	PETITJEAN	SHEET STEEL	5	GALVANISED	DAER	
46103905	HOPGARTH	Haxey Parish	477590.93	399481.42	5	7004	00204442	01/04/1993 00:00	6	2	LESS THAN 30MPH	BACK OF FOOTPATH	0	POST TOP	NOT APPLICABLE	RIGID COLUMN	URBIS	AXIA 2 S1	PETITJEAN	SHEET STEEL	5	GALVANISED	DAER	
46103905	HOPGARTH	Haxey Parish	477569.15	399493.78	6	7005	00204443	01/04/1993 00:00	6	2	LESS THAN 30MPH	BACK OF FOOTPATH	0	POST TOP	NOT APPLICABLE	RIGID COLUMN	URBIS	AXIA 2 S1	PETITJEAN	SHEET STEEL	5	GALVANISED	DAER	
46103905	HOPGARTH	Haxey Parish	477566.03	399523.46	7	7006	00204444	01/04/1993 00:00	6	2	LESS THAN 30MPH	VERGE	0	POST TOP	NOT APPLICABLE	RIGID COLUMN	URBIS	AXIA 2 S1	PETITJEAN	SHEET STEEL	5	GALVANISED	DAER	
46103905	HOPGARTH	Haxey Parish	477548.12	399534.01	8	7007	00204445	01/04/1993 00:00	6	2	LESS THAN 30MPH	VERGE	0	POST TOP	NOT APPLICABLE	RIGID COLUMN	URBIS	AXIA 2 S1	PETITJEAN	SHEET STEEL	5	GALVANISED	DAER	
46103905	HOPGARTH	Haxey Parish	477543.01	399564.12	9	7008	00204446	01/04/1993 00:00	6	2	LESS THAN 30MPH	VERGE	0	POST TOP	NOT APPLICABLE	RIGID COLUMN	URBIS	AXIA 2 S1	PETITJEAN	SHEET STEEL	5	GALVANISED	DAER	
46103907	LUNEBURG PLACE	Scunthorpe	487452.39	412382.23	1	7000	00204448	01/04/1995 00:00	2	3	LESS THAN 30MPH	BACK OF FOOTPATH	0	POST TOP	NOT APPLICABLE	RIGID COLUMN	URBIS	AXIA 2 S1	PETITJEAN	SHEET STEEL	5	GALVANISED	NIDD	
46103907	LUNEBURG PLACE	Scunthorpe	487476.2	412251.54	10	7009	00204457	01/04/1995 00:00	2	3	LESS THAN 30MPH	VERGE	0	POST TOP	NOT APPLICABLE	RIGID COLUMN	URBIS	AXIA 2 S1	PETITJEAN	SHEET STEEL	5	GALVANISED	NIDD	
46103907	LUNEBURG PLACE	Scunthorpe	487463.74	412251.18	11	7010	00204458	01/04/1995 00:00	2	3	LESS THAN 30MPH	VERGE	0	POST TOP	NOT APPLICABLE	RIGID COLUMN	URBIS	AXIA 2 S1	PETITJEAN	SHEET STEEL	5	GALVANISED	NIDD	
46103907	LUNEBURG PLACE	Scunthorpe	487427.8	412374.75	2	7001	00204449	01/04/1995 00:00	2	3	LESS THAN 30MPH	BACK OF FOOTPATH	0	POST TOP	NOT APPLICABLE	RIGID COLUMN	URBIS	AXIA 2 S1	PETITJEAN	SHEET STEEL	5	GALVANISED	NIDD	
46103907	LUNEBURG PLACE	Scunthorpe	487430	412347.39	3	7002	00204450	01/04/1995 00:00	2	3	LESS THAN 30MPH	BACK OF FOOTPATH	0	POST TOP	NOT APPLICABLE	RIGID COLUMN	URBIS	AXIA 2 S1	PETITJEAN	SHEET STEEL	5	GALVANISED	NIDD	
46103907	LUNEBURG PLACE	Scunthorpe	487445.05	412328.04	4	7003	00204451	01/04/1995 00:00	2	3	LESS THAN 30MPH	BACK OF FOOTPATH	0	POST TOP	NOT APPLICABLE	RIGID COLUMN	URBIS	AXIA 2 S1	PETITJEAN	SHEET STEEL	5	GALVANISED	NIDD	
46103907	LUNEBURG PLACE	Scunthorpe	487459.39	412311.92	5	7004	00204452	01/04/1995 00:00	2	3	LESS THAN 30MPH	VERGE	0	POST TOP	NOT APPLICABLE	RIGID COLUMN	URBIS	AXIA 2 S1	PETITJEAN	SHEET STEEL

46104055	ORCHARD CROFT	Epworth Parish	477522.8	404110.23	1	7000	00204644	01/04/1990 00:00	5	3	LESS THAN 30MPH	VERGE	0	POST TOP	NOT APPLICABLE	RIGID COLUMN	URBIS	AXIA 2 S1	PETITJEAN	SHEET STEEL	5	GALVANISED	NIDD
46104055	ORCHARD CROFT	Epworth Parish	477507.36	404117.77	2	7001	00204645	01/04/1990 00:00	5	3	LESS THAN 30MPH	VERGE	0	POST TOP	NOT APPLICABLE	RIGID COLUMN	URBIS	AXIA 2 S1	PETITJEAN	SHEET STEEL	5	GALVANISED	NIDD
46104055	ORCHARD CROFT	Epworth Parish	477479.33	404120.12	3	7002	00204646	01/04/1990 00:00	5	3	LESS THAN 30MPH	VERGE	0	POST TOP	NOT APPLICABLE	RIGID COLUMN	URBIS	AXIA 2 S1	PETITJEAN	SHEET STEEL	5	GALVANISED	NIDD
46104055	ORCHARD CROFT	Epworth Parish	477459	404132	4	7003	04200162	01/04/1990 00:00	5	3	LESS THAN 30MPH	VERGE	0	POST TOP	NOT APPLICABLE	RIGID COLUMN	URBIS	AXIA 2 S1	PETITJEAN	SHEET STEEL	5	GALVANISED	NIDD
46104056	PASTURES COURT	Messingham Parish	489239.74	404073.39	1	7000	00204647	01/04/1995 00:00	4	1	LESS THAN 30MPH	BACK OF FOOTPATH	0	POST TOP	NOT APPLICABLE	RIGID COLUMN	URBIS	AXIA 2 S1	PETITJEAN	SHEET STEEL	5	GALVANISED	NIDD
46104056	PASTURES COURT	Messingham Parish	489244.07	404104.3	2	7001	00204648	01/04/1995 00:00	4	1	LESS THAN 30MPH	BACK OF FOOTPATH	0	POST TOP	NOT APPLICABLE	RIGID COLUMN	URBIS	AXIA 2 S1	PETITJEAN	SHEET STEEL	5	GALVANISED	NIDD
46104056	PASTURES COURT	Messingham Parish	489262.85	404096.2	3	7002	00204649	01/04/1995 00:00	4	1	LESS THAN 30MPH	BACK OF FOOTPATH	0	POST TOP	NOT APPLICABLE	RIGID COLUMN	URBIS	AXIA 2 S1	PETITJEAN	SHEET STEEL	5	GALVANISED	NIDD
46104057	PEAR TREE CLOSE	Epworth Parish	477923.98	403967.33	1	7000	00204650	01/04/2001 00:00	5	3	LESS THAN 30MPH	VERGE	0	POST TOP	NOT APPLICABLE	RIGID COLUMN	URBIS	AXIA 2 S1	MALLATITE	TUBULAR STEEL	5	GALVANISED	STEPPED TUBULAR
46104057	PEAR TREE CLOSE	Epworth Parish	477905.79	403950.74	2	7001	00204651	01/04/2001 00:00	5	3	LESS THAN 30MPH	VERGE	0	POST TOP	NOT APPLICABLE	RIGID COLUMN	URBIS	AXIA 2 S1	MALLATITE	TUBULAR STEEL	5	GALVANISED	STEPPED TUBULAR
46104057	PEAR TREE CLOSE	Epworth Parish	477895.58	403965.1	3	7002	00204652	01/04/2001 00:00	5	3	LESS THAN 30MPH	BACK OF FOOTPATH	0	POST TOP	NOT APPLICABLE	RIGID COLUMN	URBIS	AXIA 2 S1	MALLATITE	TUBULAR STEEL	5	GALVANISED	STEPPED TUBULAR
46104059	PIPPIN COURT	Flixborough Parish	487323.63	412470.98	1	7000	00204653	01/04/2000 00:00	2	1	LESS THAN 30MPH	BACK OF FOOTPATH	0	POST TOP	NOT APPLICABLE	RIGID COLUMN	PHILIPS	STELA LONG 18 LED	FABRIKAT	TUBULAR STEEL	5	GALVANISED	STEPPED TUBULAR
46104059	PIPPIN COURT	Flixborough Parish	487291.37	412468.02	2	7001	00204654	01/04/2000 00:00	2	1	LESS THAN 30MPH	BACK OF FOOTPATH	0	POST TOP	NOT APPLICABLE	RIGID COLUMN	PHILIPS	STELA LONG 18 LED	FABRIKAT	TUBULAR STEEL	5	GALVANISED	STEPPED TUBULAR
46104059	PIPPIN COURT	Flixborough Parish	487289.76	412489.26	3	7002	00204655	01/04/2000 00:00	2	1	LESS THAN 30MPH	BACK OF FOOTPATH	0	POST TOP	NOT APPLICABLE	RIGID COLUMN	PHILIPS	STELA LONG 18 LED	FABRIKAT	TUBULAR STEEL	5	GALVANISED	STEPPED TUBULAR
46104059	PIPPIN COURT	Flixborough Parish	487271.24	412505.12	4	7003	00204656	01/04/2000 00:00	2	1	LESS THAN 30MPH	VERGE	0	POST TOP	NOT APPLICABLE	RIGID COLUMN	PHILIPS	STELA LONG 18 LED	FABRIKAT	TUBULAR STEEL	5	GALVANISED	STEPPED TUBULAR
46104062	THE PRECINCT	Scunthorpe	487729.91	409131.78	1	7000	00204657	01/04/1985 00:00	5	2	NOT ON A ROAD	OTHER	1000	SINGLE ARM	NOT APPLICABLE	RIGID COLUMN	PHILIPS	UNISTREET 4.5 KLM	PETITJEAN	SHEET STEEL	8	GALVANISED	THAMES
46104066	GLOSSOP ROAD	Gunness Parish	486760.32	410968.34	1FP	7000	00204664	01/04/1980 00:00	2	2	LESS THAN 30MPH	BACK OF FOOTPATH	0	POST TOP	LIGHT GREY	RIGID COLUMN	URBIS	AXIA 2 S1	PETITJEAN	SHEET STEEL	5	PAINTED	NIDD
46104066	GLOSSOP ROAD	Gunness Parish	486770.23	410985.99	2FP	7001	00204665	01/04/1980 00:00	2	2	LESS THAN 30MPH	BACK OF FOOTPATH	0	POST TOP	LIGHT GREY	RIGID COLUMN	URBIS	AXIA 2 S1	PETITJEAN	SHEET STEEL	5	PAINTED	NIDD
46104066	GLOSSOP ROAD	Gunness Parish	486763.84	411025.84	3FP	7002	00204666	01/04/1980 00:00	2	2	LESS THAN 30MPH	BACK OF FOOTPATH	0	POST TOP	LIGHT GREY	RIGID COLUMN	URBIS	AXIA 2 S1	PETITJEAN	SHEET STEEL	5	PAINTED	NIDD
46104066	GLOSSOP ROAD	Gunness Parish	486767.6	411040.63	4FP	7003	00204667	15/10/2024 00:00	2	2	LESS THAN 30MPH	VERGE	0	POST TOP	NOT APPLICABLE	RIGID COLUMN	URBIS	AXIA 2 S1	MALLATITE	TUBULAR STEEL	6	GALVANISED	TUBULAR
46104071	ACACIA WAY	Messingham Parish	489065.61	404031.06	1	7000	00204668	01/04/1995 00:00	4	1	LESS THAN 30MPH	BACK OF FOOTPATH	0	POST TOP	NOT APPLICABLE	RIGID COLUMN	URBIS	AXIA 2 S1	PETITJEAN	SHEET STEEL	5	GALVANISED	NIDD
46104071	ACACIA WAY	Messingham Parish	489034.04	404027.79	2	7001	00204669	01/04/1995 00:00	4	1	LESS THAN 30MPH	BACK OF FOOTPATH	0	POST TOP	NOT APPLICABLE	RIGID COLUMN	URBIS	AXIA 2 S1	PETITJEAN	SHEET STEEL	5	GALVANISED	NIDD
46104071	ACACIA WAY	Messingham Parish	489003.77	404039.9	3	7002	00204670	01/04/1995 00:00	4	1	LESS THAN 30MPH	BACK OF FOOTPATH	0	POST TOP	NOT APPLICABLE	RIGID COLUMN	URBIS	AXIA 2 S1	PETITJEAN	SHEET STEEL	5	GALVANISED	NIDD
46104071	ACACIA WAY	Messingham Parish	488982.96	404032.28	4	7003	00204671	01/04/1995 00:00	4	1	LESS THAN 30MPH	BACK OF FOOTPATH	0	POST TOP	NOT APPLICABLE	RIGID COLUMN	URBIS	AXIA 2 S1	PETITJEAN	SHEET STEEL	5	GALVANISED	NIDD
46104072	PROSPECT LANE	Alkborough Parish	488273	421943	1	7001	04200329	01/04/1980 00:00	1	2	LESS THAN 30MPH	VERGE	300	SINGLE ARM	NOT APPLICABLE	RIGID COLUMN	URBIS	AXIA 2 S1	VALMONT ST	SHEET STEEL	5	GALVANISED	THAMES
46104077	CONEY COURT	Brigg Parish	499963	407250	1	7001	04200313	01/04/1986 00:00	2	3	NOT ON A ROAD	WALL	300	SINGLE ARM	NOT APPLICABLE	WALL MOUNTED	URBIS	AXIA 2 S1	WALL MOUNT	NOT APPLICABLE	NA	NOT APPLICABI	Not Applicable
46104078	CORNWALL CLOSE	Kirton in Lindsey Parish	493340.26	398549.57	4	7000	00204673	01/04/1995 00:00	1	3	NOT ON A ROAD	BACK OF FOOTPATH	0	POST TOP	LIGHT GREY	RIGID COLUMN	URBIS	AXIA 2 S1	MALLATITE	TUBULAR STEEL	5	PAINTED	STEPPED TUBULAR
46104078	CORNWALL CLOSE	Kirton in Lindsey Parish	493315.85	398553.08	5	7001	00204674	01/04/1995 00:00	1	3	LESS THAN 30MPH	BACK OF FOOTPATH	0	POST TOP	LIGHT GREY	RIGID COLUMN	URBIS	AXIA 2 S1	MALLATITE	TUBULAR STEEL	5	PAINTED	STEPPED TUBULAR
46104079	DANESGATE	New Holland Parish	508269.62	423905.79	1	7000	00204675	01/04/2001 00:00	4	1	LESS THAN 30MPH	BACK OF FOOTPATH	300	SINGLE ARM	NOT APPLICABLE	RIGID COLUMN	URBIS	AXIA 2 S1	MALLATITE	TUBULAR STEEL	6	GALVANISED	STEPPED TUBULAR
46104079	DANESGATE	New Holland Parish	508283.22	423923.51	2	7001	00204676	01/04/2001 00:00	4	1	LESS THAN 30MPH	BACK OF FOOTPATH	300	SINGLE ARM	NOT APPLICABLE	RIGID COLUMN	URBIS	AXIA 2 S1	MALLATITE	TUBULAR STEEL	6	GALVANISED	STEPPED TUBULAR
46104079	DANESGATE	New Holland Parish	508252.62	423925.94	3	7002	00204677	01/04/2008 00:00	4	1	LESS THAN 30MPH	FRONT OF FOOTPATH	0	POST TOP	NOT APPLICABLE	RIGID COLUMN	URBIS	AXIA 2 S1	BRITISH STEE	TUBULAR STEEL	6	GALVANISED	ASH
46104079	DANESGATE	New Holland Parish	508300.7	423981.58	6	7005	00204680	05/03/2021 00:00	4	1	LESS THAN 30MPH	BACK OF FOOTPATH	0	POST TOP	NOT APPLICABLE	RIGID COLUMN	URBIS	AXIA 2 S1	MALLATITE	TUBULAR STEEL	6	GALVANISED	TUBULAR
46104079	DANESGATE	New Holland Parish	508266.5	423974.87	7	7006	00204681	05/03/2021 00:00	4	1	LESS THAN 30MPH	BACK OF FOOTPATH	0	POST TOP	NOT APPLICABLE	RIGID COLUMN	URBIS	AXIA 2 S1	MALLATITE	TUBULAR STEEL	6	GALVANISED	TUBULAR
46104079	DANESGATE	New Holland Parish	508230.88	423981.87	8	7007	00204682	01/04/2003 00:00	4	1	LESS THAN 30MPH	VERGE	0	POST TOP	NOT APPLICABLE	RIGID COLUMN	URBIS	AXIA 2 S1	VALMONT ST	TUBULAR STEEL	6	GALVANISED	TUBULAR
46104080	ELM WAY	Messingham Parish	489045.73	404086.87	1	7001	00204684	01/04/2000 00:00	4	1	NOT ON A ROAD	BACK OF FOOTPATH	0	POST TOP	NOT APPLICABLE	MID HINGED	URBIS	AXIA 2 S1	PETITJEAN	SHEET STEEL	5	GALVANISED	LEVEN
46104080	ELM WAY	Messingham Parish	489093.51	404011.1	1	7000	00204683	01/04/1995 00:00	4	1	LESS THAN 30MPH	BACK OF FOOTPATH	0	POST TOP	NOT APPLICABLE	RIGID COLUMN	URBIS	AXIA 2 S1	PETITJEAN	SHEET STEEL	5	GALVANISED	NIDD
46104080	ELM WAY	Messingham Parish	489017	404080	2	7007	04200063	01/04/2000 00:00	4	1	NOT ON A ROAD	BACK OF FOOTPATH	0	POST TOP	NOT APPLICABLE	MID HINGED	URBIS	AXIA 2 S1	PETITJEAN	SHEET STEEL	5	GALVANISED	LEVEN
46104080	ELM WAY	Messingham Parish	489086.51	404041.01	2	7002	00204685	01/04/1995 00:00	4	1	LESS THAN 30MPH	BACK OF FOOTPATH	0	POST TOP	NOT APPLICABLE	RIGID COLUMN	URBIS	AXIA 2 S1	PETITJEAN	SHEET STEEL	5	GALVANISED	NIDD
46104080	ELM WAY	Messingham Parish	489067.82	404072.15	3	7003	00204686	01/04/1995 00:00	4	1	LESS THAN 30MPH	BACK OF FOOTPATH	0	POST TOP	NOT APPLICABLE	RIGID COLUMN	URBIS	AXIA 2 S1	PETITJEAN	SHEET STEEL	5	GALVANISED	NIDD
46104080	ELM WAY	Messingham Parish	489063.3	404104.57	4	7004	00204687	01/04/1995 00:00	4	1	LESS THAN 30MPH	BACK OF FOOTPATH	0	POST TOP	NOT APPLICABLE	RIGID COLUMN	URBIS	AXIA 2 S1	PETITJEAN	SHEET STEEL	5	GALVANISED	NIDD
46104080	ELM WAY	Messingham Parish	489043.58	404130.35	5	7005	00204688	01/04/1995 00:00	4	1	LESS THAN 30MPH	BACK OF FOOTPATH	0	POST TOP	NOT APPLICABLE	RIGID COLUMN	URBIS	AXIA 2 S1	PETITJEAN	SHEET STEEL	5	GALVANISED	NIDD
46104080	ELM WAY	Messingham Parish	489044.85	404157.63	6	7006	00204689	01/04/1995 00:00	4	1	LESS THAN 30MPH	BACK OF FOOTPATH	0	POST TOP	NOT APPLICABLE	RIGID COLUMN	URBIS	AXIA 2 S1	PETITJEAN	SHEET STEEL	5	GALVANISED	NIDD
46104081	GELDER BECK ROAD	Messingham Parish	489345.87	404051.02	1	7000	00204690	01/04/1997 00:00	4	1	LESS THAN 30MPH	BACK OF FOOTPATH	800	SINGLE ARM	NOT APPLICABLE	RIGID COLUMN	URBIS	AXIA 2 S1	PETITJEAN	SHEET STEEL	8	GALVANISED	THAMES
46104081	GELDER BECK ROAD	Messingham Parish	489324.95	404063.54	2	7001	00204691	01/04/1995 00:00	4	1	LESS THAN 30MPH	BACK OF FOOTPATH	0	POST TOP	NOT APPLICABLE	RIGID COLUMN	URBIS	AXIA 2 S1	PETITJEAN	SHEET STEEL	5	GALVANISED	NIDD
46104081	GELDER BECK ROAD	Messingham Parish	489321.72	404023.75	3	7002	00204692	01/04/1995 00:00	4	1	LESS THAN 30MPH	BACK OF FOOTPATH	0	POST TOP	NOT APPLICABLE	RIGID COLUMN	URBIS	AXIA 2 S1	PETITJEAN	SHEET STEEL	5	GALVANISED	NIDD
46104081	GELDER BECK ROAD	Messingham Parish	489334.49	403997.39	4	7003	00204693	01/04/1995 00:00	4	1	LESS THAN 30MPH	BACK OF FOOTPATH	0	POST TOP	NOT APPLICABLE	RIGID COLUMN	URBIS	AXIA 2 S1	PETITJEAN	SHEET STEEL	5	GALVANISED	NIDD
46104081	GELDER BECK ROAD	Messingham Parish	489315	403993.13	5	7004	00204694	01/04/1995 00:00	4	1	LESS THAN 30MPH	BACK OF FOOTPATH	0	POST TOP	NOT APPLICABLE	RIGID COLUMN	URBIS	AXIA 2 S1	PETITJEAN	SHEET STEEL	5	GALVANISED	NIDD
46104081	GELDER BECK ROAD	Messingham Parish	489312.07	404053.61	6	7005	00204695	01/04/1995 00:00	4	1	LESS THAN 30MPH	BACK OF FOOTPATH	0	POST TOP	NOT APPLICABLE	RIGID COLUMN	URBIS	AXIA 2 S1	PETITJEAN	SHEET STEEL	5	GALVANISED	NIDD
46104081	GELDER BECK ROAD	Messingham Parish	489319.75	404086.43	7	7006	00204696	01/04/1995 00:00	4	1	LESS THAN 30MPH	BACK OF FOOTPATH	0	POST TOP	NOT APPLICABLE	RIGID COLUMN	URBIS	AXIA 2 S1	PETITJEAN	SHEET STEEL	5	GALVANISED	NIDD
46104081	GELDER BECK ROAD	Messingham Parish	489310.63	404101.99	8	7007	00204697	01/04/1995 00:00	4	1	LESS THAN 30MPH	BACK OF FOOTPATH	0	POST TOP	NOT APPLICABLE	RIGID COLUMN	URBIS	AXIA 2 S1	PETITJEAN	SHEET STEEL	5	GALVANISED	NIDD
46104084	GOXHILL ROAD	Thornton Curtis Parish	508553.11	418194.16	1	7000	00204698	01/04/1989 00:00	4	1	GREATER THAN 50MPH	VERGE	300	SINGLE ARM	LIGHT GREY	RIGID COLUMN	URBIS	AXIA 2 S1	PETITJEAN	SHEET STEEL	5	PAINTED	DAER
46104088	GARDEN VILLAGE	North Killingholme Parish	514297.9	417062.7	1	7000	00204699	01/04/2004 00:00	4	1	LESS THAN 30MPH	FRONT OF FOOTPATH	0	POST TOP	NOT APPLICABLE	RIGID COLUMN	URBIS	AXIA 2 S1	MALLATITE	TUBULAR STEEL	6	GALVANISED	STEPPED TUBULAR
46104088	GARDEN VILLAGE	North Killingholme Parish	514263.49	417044.28	1	7005	00204704	01/04/2004 00:00	4	1	LESS THAN 30MPH	FRONT OF FOOTPATH	0	POST TOP	NOT APPLICABLE	RIGID COLUMN	URBIS	AXIA 2 S1	MALLATITE	TUBULAR STEEL	6	GALVANISED	STEPPED TUBULAR
46104088	GARDEN VILLAGE	North Killingholme Parish	514291.8	417097.9	2	7001	00204700	01/04/2004 00:00	4	1	LESS THAN 30MPH	FRONT OF FOOTPATH	0	POST TOP	NOT APPLICABLE	RIGID COLUMN	URBIS	AXIA 2 S1	MALLATITE	TUBULAR STEEL	6	GALVANISED	STEPPED TUBULAR
46104088	GARDEN VILLAGE	North Killingholme Parish	514286.6	417046.8	2	7006	00204705	01/04/2004 00:00	4	1	LESS THAN 30MPH	BACK OF FOOTPATH	0	POST TOP	NOT APPLICABLE	RIGID COLUMN	URBIS	AXIA 2 S1	MALLATITE	TUBULAR STEEL	6	GALVANISED	STEPPED TUBULAR
46104088	GARDEN VILLAGE	North Killingholme Parish	514366.5	417075	3	7002	00204701	01/04/2004 00:00	4	1	LESS THAN 30MPH	FRONT OF FOOTPATH	0	POST TOP	NOT APPLICABLE	RIGID COLUMN	URBIS	AXIA 2 S1	MALLATITE	TUBULAR STEEL	6	GALVANISED	STEPPED TUBULAR
46104088	GARDEN VILLAGE	North Killingholme Parish	514318	417046.8	3	7007	00204706	01/04/2004 00:00	4	1	LESS THAN 30MPH	BACK OF FOOTPATH	0	POST TOP	NOT APPLICABLE	RIGID COLUMN	URBIS	AXIA 2 S1	MALLATITE	TUBULAR STEEL	6	GALVANISED	STEPPED TUBULAR
46104088	GARDEN VILLAGE	North Killingholme Parish	514364.3	417109.9	4	7003	00204702	01/04/2004 00:00	4	1	LESS THAN 30MPH	FRONT OF FOOTPATH	0	POST TOP	NOT APPLICABLE	RIGID COLUMN	URBIS	AXIA 2 S1	MALLATITE	TUBULAR STEEL	6	GALVANISED	STEPPED TUBULAR
46104088	GARDEN VILLAGE	North Killingholme Parish	514345.8	417059.1	4	7008	00204707	01/04/2004 00:00	4	1	LESS THAN 30MPH	BACK OF FOOTPATH	0	POST TOP	NOT APPLICABLE	RIGID COLUMN	URBIS	AXIA 2 S1	MALLATITE	TUBULAR STEEL	6	GALVANISED	STEPPED TUBULAR
46104088	GARDEN VILLAGE	North Killingholme Parish	514352.9	417115.7	5	7004	00204703	01/04/2004 00:00	4	1	LESS THAN 30MPH	FRONT OF FOOTPATH	0	POST TOP	NOT APPLICABLE	RIGID COLUMN	URBIS	AXIA 2 S1	MALLATITE	TUBULAR STEEL	6	GALVANISED	STEPPED TUBULAR
46104088	GARDEN VILLAGE	North Killingholme Parish	514367.5	417056.2	5	7009	00204708	01/04/2004 00:00	4	1	LESS THAN 30MPH	BACK OF FOOTPATH	0	POST TOP	NOT APPLICABLE	RIGID COLUMN	URBIS	AXIA 2 S1	MALLATITE	TUBULAR STEEL	6	GALVANISED	STEPPED TUBULAR
46104088	GARDEN VILLAGE	North Killingholme Parish	514412.5	417065.9	6	7010	00204709	01/04/2004 00:00	4	1	LESS THAN 30MPH	BACK OF FOOTPATH	0	POST TOP	NOT APPLICABLE	RIGID COLUMN	URBIS	AXIA 2 S1	MALLATITE	TUBULAR STEEL	6	GALVANISED	STEPPED TUBULAR
46104092	MAIN STREET	Burton upon Stather Parish	488135.8	416786.92	10	7009	00204719	01/04/1990 00:00	2	3	GREATER THAN 50MPH	BACK OF FOOTPATH	300	SINGLE ARM	NOT APPLICABLE	RIGID COLUMN	URBIS	AXIA 2 S1	PETITJEAN	SHEET STEEL	6	NOT APPLICABI	DAER
46104092	MAIN STREET	Burton upon Stather Parish	488109.78	416792.48	11	7010	00204720	01/04/1990 00:00	2	3	GREATER THAN 50MPH	BACK OF FOOTPATH	300	SINGLE ARM	NOT APPLICABLE	RIGID COLUMN	URBIS	AXIA 2 S1	PETITJEAN	SHEET STEEL	6	NOT APPLICABI	DAER
46104092	MAIN STREET	Burton upon Stather Parish	488090.69	416820.34	12	7011	00204721	01/04/1990 00:00	2	3	GREATER THAN 50MPH	BACK OF FOOTPATH	300	SINGLE ARM	NOT APPLICABLE	RIGID COLUMN	URBIS	AXIA 2 S1	PETITJEAN	SHEET STEEL	6	NOT APPLICABI	DAER
46104092	MAIN STREET	Burton upon Stather Parish	488099.98	416837.36	13	7012	00204722	23/10/2019 00:00	2	3	GREATER THAN 50MPH	ON POLE	300	SINGLE ARM	NOT APPLICABLE	POLE MOUNTED	URBIS	AXIA 2 S1	WOODEN PO	WOOD	5	NOT APPLICABI	PUDSEY DIAMOND
46104092	MAIN STREET	Burton upon Stather Parish	488091.91	416880.52	14	7013	00204723	01/04/1990 00:00	2	3	GREATER THAN 50MPH	BACK OF FOOTPATH	300	SINGLE ARM	NOT APPLICABLE	RIGID COLUMN	URBIS	AXIA 2 S1	PETITJEAN	SHEET STEEL	6	NOT APPLICABI	DAER
46104092	MAIN STREET	Burton upon Stather Parish	488075.78	416903.1	15	7014	00204724	01/04/1990 00:00	2	3	GREATER THAN 50MPH	BACK OF FOOTPATH	300	SINGLE ARM	NOT APPLICABLE	RIGID COLUMN	URBIS	AXIA 2 S1	PETITJEAN	SHEET STEEL	6	NOT APPLICABI	DAER
46104092	MAIN STREET	Burton upon Stather Parish	488049.25	416923.63	16	7015	00204725	23/10/2019 00:00	2	3	GREATER THAN 50MPH	ON POLE	300	SINGLE ARM	NOT APPLICABLE	POLE MOUNTED	URBIS	AXIA 2 S1	WOODEN PO	WOOD	5	NOT APPLICABI	PUDSEY DIAMOND
46104092	MAIN STREET	Burton upon Stather Parish	488381.36	416749.69	1FP	7000	00204710	01/04/1990 00:00	2	3	GREATER THAN 50MPH	VERGE	800	SINGLE ARM	NOT APPLICABLE	RIGID COLUMN	URBIS	AXIA 2 S1	PETITJEAN	SHEET STEEL	8	NOT APPLICABI	THAMES
46104092	MAIN STREET	Burton upon Stather Parish	488380.74	416730.02	2FP	7001	00204711	01/04/1990 00:00	2	3	GREATER THAN 50MPH	VERGE	800	SINGLE ARM	NOT APPLICABLE	RIGID COLUMN	URBIS	AXIA 2 S1	PETITJEAN	SHEET STEEL	8	NOT APPLICABI	THAMES
46104092	MAIN STREET	Burton upon Stather Parish	488368.65	416738.63	3FP	7002	00204712	07/09/2017 00:00	2	3	GREATER THAN 50MPH	VERGE	500	SINGLE ARM	NOT APPLICABLE	RIGID COLUMN	URBIS	AXIA 2 S1	VALMONT ST	SHEET STEEL	8	GALVANISED	THAMES
46104092	MAIN STREET	Burton upon Stather Parish	488346.87	416754.49	4	7003	00204713	01/04/1990 00:00	2	3	GREATER THAN 50MPH	BACK OF FOOTPATH	300	SINGLE ARM	NOT APPLICABLE	RIGID COLUMN	URBIS	AXIA 2 S1	PETITJEAN	SHEET STEEL	6	NOT APPLICABI	DAER
46104092	MAIN STREET	Burton upon Stather Parish	488314.24	416759.43	5	7004	00204714	01/04/1990 00:00	2	3	GREATER THAN 50MPH	BACK OF FOOTPATH	300	SINGLE ARM	NOT APPLICABLE	RIGID COLUMN	URBIS	AXIA 2 S1	PETITJEAN	SHEET STEEL	6	NOT APPLICABI	DAER
46104092	MAIN STREET	Burton upon Stather Parish	488283.95	416760.47	6	7005	00204715	01/04/1990 00:00	2	3	GREATER THAN 50MPH	BACK OF FOOTPATH	300	SINGLE ARM	NOT APPLICABLE	RIGID COLUMN	URBIS	AXIA 2 S1	PETITJEAN	SHEET STEEL	6	NOT APPLICABI	DAER
46104092	MAIN STREET	Burton upon Stather Parish	488240.61	416753.77	7	7006	00204716	01/04/1990 00:00	2	3	GREATER THAN 50MPH	BACK OF FOOTPATH	300	SINGLE ARM	NOT APPLICABLE	RIGID COLUMN	URBIS	AXIA 2 S1	PETITJEAN	SHEET STEEL	6	NOT APPLICABI	DAER
46104092	MAIN STREET	Burton upon Stather Parish	488208.7	416762	8	7007	00204717	01/04/1990 00:00	2	3	GREATER THAN 50MPH	BACK OF FOOTPATH	300	SINGLE ARM	NOT APPLICABLE	RIGID COLUMN	URBIS	AXIA 2 S1	PETITJEAN	SHEET STEEL	6	NOT APPLICABI	DAER
46104092	MAIN STREET	Burton upon Stather Parish	488170.89	416773.5	9	7008	00204718	01/04/1990 00:00	2	3	GREATER THAN 50MPH	BACK OF FOOTPATH	300	SINGLE ARM	NOT APPLICABLE	RIGID COLUMN	URBIS	AXIA 2 S1	PETITJEAN	SHEET STEEL	6	NOT APPLICABI	DAER
46104094	ORCHARD CLOSE	Kirton in Lindsey Parish	493189.8	398981.25	1	7000	00204726	01/04/2001 00:00	1	3	LESS THAN 30MPH	VERGE	0	POST TOP	NOT APPLICABLE	RIGID COLUMN	URBIS	AXIA 2 S1	MALLATITE	TUBULAR STEEL	5	GALVANISED	STEPPED TUBULAR
46104094	ORCHARD CLOSE	Kirton in Lindsey Parish	493212.59	398972.46	2	7001	00204727	01/04/2001 00:00	1	3	LESS THAN 30MPH	VERGE	0	POST TOP	NOT APPLICABLE	RIGID COLUMN	URBIS	AXIA 2 S1	MALLATITE	TUBULAR STEEL	5	GALVANISED	STEPPED TUBULAR
46104094	ORCHARD CLOSE	Kirton in Lindsey Parish	493236.08	398961.11	3	7002	00204728	01/04/2001 00:00	1	3	LESS THAN 30MPH	VERGE	0	POST TOP	NOT APPLICABLE	RIGID COLUMN	URBIS	AXIA 2 S1	MALLATITE	TUBULAR STEEL	5	GALVANISED	STEPPED TUBULAR
46104094	ORCHARD CLOSE	Kirton in Lindsey Parish	493266.5	398951.7	4	7003	00204729	01/04/2001 00:00	1	3	LESS THAN 30MPH	VERGE	0	POST TOP	NOT APPLICABLE	RIGID COLUMN	URBIS	AXIA 2 S1	MALLATITE	TUBULAR STEEL	5	GALVANISED	STEPPED TUBULAR
46104094	ORCHARD CLOSE	Kirton in Lindsey Parish	493273.37	398933.58	5	7004	00204730	01/04/2001 00:00	1	3	LESS THAN 30MPH	VERGE	0	POST TOP	NOT APPLICABLE	RIGID COLUMN	URBIS	AXIA 2 S1	MALLATITE	TUBULAR STEEL	5	GALVANISED	STEPPED TUBULAR
46104095	ANCHORS WAY	Broughton Parish	499279.66	407044.4	1	7000	00204731	01/04/1996 00:00	1	1	LESS THAN 30MPH	BACK OF FOOTPATH	0	POST TOP	NOT APPLICABLE	RIGID COLUMN	URBIS	AXIA 2 S1	PETITJEAN	TUBULAR STEEL	5	GALVANISED	STEPPED TUBULAR
46104095	ANCHORS WAY	Broughton Parish	499300.41	407050.03	2	7001	00204732	01/04/1996 00:00	1	1	LESS THAN 30MPH	VERGE	0	POST TOP	NOT APPLICABLE	RIGID COLUMN	URBIS	AXIA 2 S1	PETITJEAN	TUBULAR STEEL	5	GALVANISED	STEPPED TUBULAR
46104095	ANCHORS WAY	Broughton Parish	499301.84	407023.68	3	7002	00204733	01/04/1996 00:00	1	1	LESS THAN 30MPH	VERGE	0	POST TOP	NOT APPLICABLE	RIGID COLUMN	URBIS	AXIA 2 S1	PETITJEAN	TUBULAR STEEL	5	GALVANISED	STEPPED TUBULAR
46104095	ANCHORS WAY	Broughton Parish	499297.86	407004.42	4	7003	00204734	01/04/1996 00:00	1	1	LESS THAN 30MPH	VERGE	0	POST TOP	NOT APPLICABLE	RIGID COLUMN	URBIS	AXIA 2 S1	PETITJEAN	TUBULAR STEEL	5	GALVANISED	STEPPED TUBULAR
46104095	ANCHORS WAY	Broughton Parish	499295.83	407067.89	5	7004	00204

46104202	LYCH GATE	Broughton Parish	495749.05	408474.89	2	7001	00204897	01/04/1993 00:00	1	1	LESS THAN 30MPH	BACK OF FOOTPATH	0	POST TOP	NOT APPLICABLE	RIGID COLUMN	URBIS	AXIA 2 S1	PETITJEAN	SHEET STEEL	6	GALVANISED	DAER
46104202	LYCH GATE	Broughton Parish	495784.63	408475.44	3	7002	00204898	01/04/1993 00:00	1	1	LESS THAN 30MPH	BACK OF FOOTPATH	0	POST TOP	NOT APPLICABLE	RIGID COLUMN	URBIS	AXIA 2 S1	PETITJEAN	SHEET STEEL	6	GALVANISED	DAER
46104202	LYCH GATE	Broughton Parish	495771.95	408470.18	4	7003	00204899	01/04/1993 00:00	1	1	LESS THAN 30MPH	BACK OF FOOTPATH	0	POST TOP	NOT APPLICABLE	RIGID COLUMN	URBIS	AXIA 2 S1	PETITJEAN	SHEET STEEL	6	GALVANISED	DAER
46104205	PEACH TREE CLOSE	Scunthorpe	490612.97	407635.08	1	7000	00204900	01/04/2001 00:00	1	3	LESS THAN 30MPH	BACK OF FOOTPATH	0	POST TOP	NOT APPLICABLE	RIGID COLUMN	URBIS	AXIA 2 S1	MALLATITE	TUBULAR STEEL	6	GALVANISED	STEPPED TUBULAR
46104205	PEACH TREE CLOSE	Scunthorpe	490610.98	407657.35	2	7001	00204901	01/04/2001 00:00	1	3	LESS THAN 30MPH	BACK OF FOOTPATH	0	POST TOP	NOT APPLICABLE	RIGID COLUMN	URBIS	AXIA 2 S1	MALLATITE	TUBULAR STEEL	6	GALVANISED	STEPPED TUBULAR
46104205	PEACH TREE CLOSE	Scunthorpe	490584.45	407673.72	3	7002	00204902	01/04/2001 00:00	1	3	LESS THAN 30MPH	BACK OF FOOTPATH	0	POST TOP	NOT APPLICABLE	RIGID COLUMN	URBIS	AXIA 2 S1	MALLATITE	TUBULAR STEEL	6	GALVANISED	STEPPED TUBULAR
46104205	PEACH TREE CLOSE	Scunthorpe	490587.83	407708.18	4	7003	00204903	01/04/2001 00:00	1	3	LESS THAN 30MPH	BACK OF FOOTPATH	0	POST TOP	NOT APPLICABLE	RIGID COLUMN	URBIS	AXIA 2 S1	MALLATITE	TUBULAR STEEL	6	GALVANISED	STEPPED TUBULAR
46104205	PEACH TREE CLOSE	Scunthorpe	490615.19	407714.07	5	7004	00204904	01/04/2001 00:00	1	3	LESS THAN 30MPH	BACK OF FOOTPATH	0	POST TOP	NOT APPLICABLE	RIGID COLUMN	URBIS	AXIA 2 S1	MALLATITE	TUBULAR STEEL	6	GALVANISED	STEPPED TUBULAR
46104205	PEACH TREE CLOSE	Scunthorpe	490635.47	407729.69	6	7005	00204905	01/04/2001 00:00	1	3	LESS THAN 30MPH	BACK OF FOOTPATH	0	POST TOP	NOT APPLICABLE	RIGID COLUMN	URBIS	AXIA 2 S1	MALLATITE	TUBULAR STEEL	6	GALVANISED	STEPPED TUBULAR
46104205	PEACH TREE CLOSE	Scunthorpe	490661.36	407747.67	7	7006	00204906	01/04/2001 00:00	1	3	LESS THAN 30MPH	BACK OF FOOTPATH	0	POST TOP	NOT APPLICABLE	RIGID COLUMN	URBIS	AXIA 2 S1	MALLATITE	TUBULAR STEEL	6	GALVANISED	STEPPED TUBULAR
46104205	PEACH TREE CLOSE	Scunthorpe	490689.87	407758.72	8	7007	00204907	01/04/2001 00:00	1	3	LESS THAN 30MPH	BACK OF FOOTPATH	0	POST TOP	NOT APPLICABLE	RIGID COLUMN	URBIS	AXIA 2 S1	MALLATITE	TUBULAR STEEL	6	GALVANISED	STEPPED TUBULAR
46104207	POPPY CLOSE	Flixborough Parish	487195.74	412784.74	1	7000	00204908	01/04/1995 00:00	2	1	LESS THAN 30MPH	VERGE	0	POST TOP	NOT APPLICABLE	RIGID COLUMN	URBIS	AXIA 2 S1	PETITJEAN	SHEET STEEL	5	GALVANISED	NIDD
46104207	POPPY CLOSE	Flixborough Parish	487206.5	412801.91	2	7001	00204909	01/04/1995 00:00	2	1	LESS THAN 30MPH	VERGE	0	POST TOP	NOT APPLICABLE	RIGID COLUMN	URBIS	AXIA 2 S1	PETITJEAN	SHEET STEEL	5	GALVANISED	NIDD
46104207	POPPY CLOSE	Flixborough Parish	487200.32	412815.35	3	7002	00204910	01/04/1995 00:00	2	1	LESS THAN 30MPH	VERGE	0	POST TOP	NOT APPLICABLE	RIGID COLUMN	URBIS	AXIA 2 S1	PETITJEAN	SHEET STEEL	5	GALVANISED	NIDD
46104208	POTTERS CLOSE	Goxhill Parish	510351.79	421619.35	1	7000	00204911	01/04/2001 00:00	4	4	LESS THAN 30MPH	BACK OF FOOTPATH	0	POST TOP	NOT APPLICABLE	RIGID COLUMN	URBIS	AXIA 2 S1	MALLATITE	TUBULAR STEEL	5	GALVANISED	STEPPED TUBULAR
46104208	POTTERS CLOSE	Goxhill Parish	510341.43	421645.1	2	7001	00204912	01/04/2001 00:00	4	4	LESS THAN 30MPH	BACK OF FOOTPATH	0	POST TOP	NOT APPLICABLE	RIGID COLUMN	URBIS	AXIA 2 S1	MALLATITE	TUBULAR STEEL	5	GALVANISED	STEPPED TUBULAR
46104208	POTTERS CLOSE	Goxhill Parish	510335.79	421667.15	3	7002	00204913	01/04/2001 00:00	4	4	LESS THAN 30MPH	BACK OF FOOTPATH	0	POST TOP	NOT APPLICABLE	RIGID COLUMN	URBIS	AXIA 2 S1	MALLATITE	TUBULAR STEEL	5	GALVANISED	STEPPED TUBULAR
46104209	ROBIN CLOSE	Bottesford Parish	489861.54	406728.34	1	7000	00204914	01/04/2001 00:00	3	1	LESS THAN 30MPH	BACK OF FOOTPATH	0	POST TOP	NOT APPLICABLE	RIGID COLUMN	URBIS	AXIA 2 S1	MALLATITE	TUBULAR STEEL	5	GALVANISED	STEPPED TUBULAR
46104209	ROBIN CLOSE	Bottesford Parish	489842.23	406736.77	2	7001	00204915	01/04/2001 00:00	3	1	LESS THAN 30MPH	BACK OF FOOTPATH	0	POST TOP	NOT APPLICABLE	RIGID COLUMN	URBIS	AXIA 2 S1	MALLATITE	TUBULAR STEEL	5	GALVANISED	STEPPED TUBULAR
46104209	ROBIN CLOSE	Bottesford Parish	489852.68	406754.89	3	7002	00204916	01/04/2001 00:00	3	1	LESS THAN 30MPH	BACK OF FOOTPATH	0	POST TOP	NOT APPLICABLE	RIGID COLUMN	URBIS	AXIA 2 S1	MALLATITE	TUBULAR STEEL	5	GALVANISED	STEPPED TUBULAR
46104210	ROSE WALK	Scunthorpe	490017.6	411118.05	1	7000	00204917	01/04/1996 00:00	4	4	LESS THAN 30MPH	BACK OF FOOTPATH	0	POST TOP	NOT APPLICABLE	RIGID COLUMN	URBIS	AXIA 2 S1	FABRIKAT	TUBULAR STEEL	6	GALVANISED	STEPPED TUBULAR
46104210	ROSE WALK	Scunthorpe	490036.93	411093.82	2	7001	00204918	01/04/1996 00:00	4	4	LESS THAN 30MPH	BACK OF FOOTPATH	0	POST TOP	NOT APPLICABLE	RIGID COLUMN	URBIS	AXIA 2 S1	FABRIKAT	TUBULAR STEEL	6	GALVANISED	STEPPED TUBULAR
46104210	ROSE WALK	Scunthorpe	490034.98	411060.25	3	7002	00204919	01/04/1996 00:00	4	4	LESS THAN 30MPH	BACK OF FOOTPATH	0	POST TOP	NOT APPLICABLE	RIGID COLUMN	URBIS	AXIA 2 S1	FABRIKAT	TUBULAR STEEL	6	GALVANISED	STEPPED TUBULAR
46104210	ROSE WALK	Scunthorpe	490041.03	411045.26	4	7003	00204920	01/04/1996 00:00	4	4	LESS THAN 30MPH	BACK OF FOOTPATH	0	POST TOP	NOT APPLICABLE	RIGID COLUMN	URBIS	AXIA 2 S1	FABRIKAT	TUBULAR STEEL	6	GALVANISED	STEPPED TUBULAR
46104210	ROSE WALK	Scunthorpe	490073.23	411055.24	5	7004	00204921	01/04/1996 00:00	4	4	LESS THAN 30MPH	BACK OF FOOTPATH	0	POST TOP	NOT APPLICABLE	RIGID COLUMN	URBIS	AXIA 2 S1	FABRIKAT	TUBULAR STEEL	6	GALVANISED	STEPPED TUBULAR
46104210	ROSE WALK	Scunthorpe	490104.47	411073.44	6	7005	00204922	01/04/1996 00:00	4	4	LESS THAN 30MPH	BACK OF FOOTPATH	0	POST TOP	NOT APPLICABLE	RIGID COLUMN	URBIS	AXIA 2 S1	FABRIKAT	TUBULAR STEEL	6	GALVANISED	STEPPED TUBULAR
46104210	ROSE WALK	Scunthorpe	490131.73	411069.5	7	7006	00204923	01/04/1996 00:00	4	4	LESS THAN 30MPH	BACK OF FOOTPATH	0	POST TOP	NOT APPLICABLE	RIGID COLUMN	URBIS	AXIA 2 S1	FABRIKAT	TUBULAR STEEL	6	GALVANISED	STEPPED TUBULAR
46104211	ROWAN COURT	Goxhill Parish	510039	421899.26	1	7000	00204924	01/04/1995 00:00	4	4	LESS THAN 30MPH	VERGE	0	POST TOP	NOT APPLICABLE	RIGID COLUMN	URBIS	AXIA 2 S1	PETITJEAN	SHEET STEEL	5	GALVANISED	NIDD
46104211	ROWAN COURT	Goxhill Parish	510039.17	421875	2	7001	00204925	01/04/1995 00:00	4	4	LESS THAN 30MPH	VERGE	0	POST TOP	NOT APPLICABLE	RIGID COLUMN	URBIS	AXIA 2 S1	PETITJEAN	SHEET STEEL	5	GALVANISED	NIDD
46104213	ST JOHNS CLOSE	Goxhill Parish	510049.49	421183.61	1	7000	00204926	01/04/1980 00:00	4	4	LESS THAN 30MPH	BACK OF FOOTPATH	0	POST TOP	NOT APPLICABLE	RIGID COLUMN	URBIS	AXIA 2 S1	PETITJEAN	SHEET STEEL	5	GALVANISED	NIDD
46104213	ST JOHNS CLOSE	Goxhill Parish	510077.1	421192.14	2	7001	00204927	01/04/1980 00:00	4	4	LESS THAN 30MPH	BACK OF FOOTPATH	0	POST TOP	NOT APPLICABLE	RIGID COLUMN	URBIS	AXIA 2 S1	PETITJEAN	SHEET STEEL	5	GALVANISED	NIDD
46104213	ST JOHNS CLOSE	Goxhill Parish	510079.46	421174.38	3	7002	00204928	01/04/1980 00:00	4	4	LESS THAN 30MPH	BACK OF FOOTPATH	0	POST TOP	NOT APPLICABLE	RIGID COLUMN	URBIS	AXIA 2 S1	PETITJEAN	SHEET STEEL	5	GALVANISED	NIDD
46104213	ST JOHNS CLOSE	Goxhill Parish	510096.39	421189.16	4	7003	00204929	01/04/1980 00:00	4	4	LESS THAN 30MPH	BACK OF FOOTPATH	0	POST TOP	NOT APPLICABLE	RIGID COLUMN	URBIS	AXIA 2 S1	PETITJEAN	SHEET STEEL	5	GALVANISED	NIDD
46104214	SCHOOL COURT	Brigg Parish	500109.71	407260.94	1	7000	00204930	01/04/2001 00:00	2	3	NOT ON A ROAD	WALL	300	SINGLE ARM	BLACK	WALL MOUNTED	URBIS	ABBEY	WALL MOUN1	CAST IRON	5	PAINTED	Not Applicable
46104214	SCHOOL COURT	Brigg Parish	500106.01	407276.11	2	7001	00204931	01/04/1994 00:00	2	3	NOT ON A ROAD	BACK OF FOOTPATH	0	POST TOP	BLACK	RIGID COLUMN	URBIS	ABBEY	MALLATITE	TUBULAR STEEL	5	PAINTED	STEPPED TUBULAR
46104214	SCHOOL COURT	Brigg Parish	500100.46	407300.48	3	7002	00204932	01/04/1994 00:00	2	3	NOT ON A ROAD	BACK OF FOOTPATH	0	POST TOP	BLACK	RIGID COLUMN	URBIS	ABBEY	MALLATITE	TUBULAR STEEL	5	PAINTED	STEPPED TUBULAR
46104216	SISKIN CRESCENT	Bottesford Parish	489797.51	406684.03	1	7000	00204933	01/04/2001 00:00	3	1	LESS THAN 30MPH	BACK OF FOOTPATH	0	POST TOP	NOT APPLICABLE	RIGID COLUMN	URBIS	AXIA 2 S1	MALLATITE	TUBULAR STEEL	6	GALVANISED	STEPPED TUBULAR
46104216	SISKIN CRESCENT	Bottesford Parish	489801.19	406706.65	2	7001	00204934	01/04/2001 00:00	3	1	LESS THAN 30MPH	BACK OF FOOTPATH	0	POST TOP	NOT APPLICABLE	RIGID COLUMN	URBIS	AXIA 2 S1	MALLATITE	TUBULAR STEEL	6	GALVANISED	STEPPED TUBULAR
46104216	SISKIN CRESCENT	Bottesford Parish	489780.76	406728.96	3	7002	00204935	01/04/2001 00:00	3	1	LESS THAN 30MPH	BACK OF FOOTPATH	0	POST TOP	NOT APPLICABLE	RIGID COLUMN	URBIS	AXIA 2 S1	MALLATITE	TUBULAR STEEL	6	GALVANISED	STEPPED TUBULAR
46104216	SISKIN CRESCENT	Bottesford Parish	489789.79	406754.85	4	7003	00204936	01/04/2001 00:00	3	1	LESS THAN 30MPH	BACK OF FOOTPATH	0	POST TOP	NOT APPLICABLE	RIGID COLUMN	URBIS	AXIA 2 S1	MALLATITE	TUBULAR STEEL	6	GALVANISED	STEPPED TUBULAR
46104216	SISKIN CRESCENT	Bottesford Parish	489797.19	406784.91	5	7004	00204937	01/04/2001 00:00	3	1	LESS THAN 30MPH	BACK OF FOOTPATH	0	POST TOP	NOT APPLICABLE	RIGID COLUMN	URBIS	AXIA 2 S1	MALLATITE	TUBULAR STEEL	6	GALVANISED	STEPPED TUBULAR
46104216	SISKIN CRESCENT	Bottesford Parish	489820.31	406802.66	6	7005	00204938	01/04/2001 00:00	3	1	LESS THAN 30MPH	BACK OF FOOTPATH	0	POST TOP	NOT APPLICABLE	RIGID COLUMN	URBIS	AXIA 2 S1	MALLATITE	TUBULAR STEEL	6	GALVANISED	STEPPED TUBULAR
46104216	SISKIN CRESCENT	Bottesford Parish	489829.89	406827.8	7	7006	00204939	01/04/2001 00:00	3	1	LESS THAN 30MPH	BACK OF FOOTPATH	0	POST TOP	NOT APPLICABLE	RIGID COLUMN	URBIS	AXIA 2 S1	MALLATITE	TUBULAR STEEL	6	GALVANISED	STEPPED TUBULAR
46104216	SISKIN CRESCENT	Bottesford Parish	489857.04	406840.42	8	7007	00204940	01/04/2001 00:00	3	1	LESS THAN 30MPH	BACK OF FOOTPATH	0	POST TOP	NOT APPLICABLE	RIGID COLUMN	URBIS	AXIA 2 S1	MALLATITE	TUBULAR STEEL	6	GALVANISED	STEPPED TUBULAR
46104216	SISKIN CRESCENT	Bottesford Parish	489887.02	406833.34	9	7008	00204941	01/04/2001 00:00	3	1	LESS THAN 30MPH	BACK OF FOOTPATH	0	POST TOP	NOT APPLICABLE	RIGID COLUMN	URBIS	AXIA 2 S1	MALLATITE	TUBULAR STEEL	6	GALVANISED	STEPPED TUBULAR
46104217	SKYLARK DRIVE	Bottesford Parish	489869.29	406679.53	1	7000	00204942	01/04/2001 00:00	3	1	LESS THAN 30MPH	BACK OF FOOTPATH	0	POST TOP	NOT APPLICABLE	RIGID COLUMN	URBIS	AXIA 2 S1	MALLATITE	TUBULAR STEEL	5	GALVANISED	STEPPED TUBULAR
46104217	SKYLARK DRIVE	Bottesford Parish	489894.52	406670.32	2	7001	00204943	01/04/2001 00:00	3	1	LESS THAN 30MPH	BACK OF FOOTPATH	0	POST TOP	NOT APPLICABLE	RIGID COLUMN	URBIS	AXIA 2 S1	MALLATITE	TUBULAR STEEL	5	GALVANISED	STEPPED TUBULAR
46104217	SKYLARK DRIVE	Bottesford Parish	489881.57	406660.51	3	7002	00204944	01/04/2001 00:00	3	1	LESS THAN 30MPH	BACK OF FOOTPATH	0	POST TOP	NOT APPLICABLE	RIGID COLUMN	URBIS	AXIA 2 S1	MALLATITE	TUBULAR STEEL	5	GALVANISED	STEPPED TUBULAR
46104218	SYCAMORE CLOSE	Barnetby Le Wold Parish	505984.47	409950.88	1	7000	00204945	01/04/1978 00:00	3	2	LESS THAN 30MPH	BACK OF FOOTPATH	0	POST TOP	NOT APPLICABLE	RIGID COLUMN	URBIS	AXIA 2 S1	FABRIKAT	SHEET STEEL	6	GALVANISED	6M03B
46104218	SYCAMORE CLOSE	Barnetby Le Wold Parish	505964.57	409970.25	2	7001	00204946	01/04/1978 00:00	3	2	LESS THAN 30MPH	VERGE	0	POST TOP	NOT APPLICABLE	RIGID COLUMN	URBIS	AXIA 2 S1	FABRIKAT	SHEET STEEL	6	GALVANISED	6M03B
46104218	SYCAMORE CLOSE	Barnetby Le Wold Parish	505956.57	409978.08	3	7002	00204947	01/04/1978 00:00	3	2	LESS THAN 30MPH	VERGE	0	POST TOP	NOT APPLICABLE	RIGID COLUMN	URBIS	AXIA 2 S1	FABRIKAT	SHEET STEEL	6	GALVANISED	6M03B
46104219	THE BLACKTHORNS	Broughton Parish	495749.84	409347.55	1	7000	00204948	01/04/1995 00:00	1	1	LESS THAN 30MPH	BACK OF FOOTPATH	500	SINGLE ARM	NOT APPLICABLE	RIGID COLUMN	URBIS	AXIA 2 S1	PETITJEAN	SHEET STEEL	5	GALVANISED	NIDD
46104219	THE BLACKTHORNS	Broughton Parish	495776.67	409340.45	2	7001	00204949	01/04/1995 00:00	1	1	LESS THAN 30MPH	BACK OF FOOTPATH	500	SINGLE ARM	NOT APPLICABLE	RIGID COLUMN	URBIS	AXIA 2 S1	PETITJEAN	SHEET STEEL	5	GALVANISED	NIDD
46104219	THE BLACKTHORNS	Broughton Parish	495804.59	409345.97	3	7002	00204950	01/04/1995 00:00	1	1	LESS THAN 30MPH	BACK OF FOOTPATH	500	SINGLE ARM	NOT APPLICABLE	RIGID COLUMN	URBIS	AXIA 2 S1	PETITJEAN	SHEET STEEL	5	GALVANISED	NIDD
46104219	THE BLACKTHORNS	Broughton Parish	495825.5	409344.67	4	7003	00204951	01/04/1995 00:00	1	1	LESS THAN 30MPH	BACK OF FOOTPATH	500	SINGLE ARM	NOT APPLICABLE	RIGID COLUMN	URBIS	AXIA 2 S1	PETITJEAN	SHEET STEEL	5	GALVANISED	NIDD
46104219	THE BLACKTHORNS	Broughton Parish	495848.86	409353.45	5	7004	00204952	01/04/1995 00:00	1	1	LESS THAN 30MPH	BACK OF FOOTPATH	500	SINGLE ARM	NOT APPLICABLE	RIGID COLUMN	URBIS	AXIA 2 S1	PETITJEAN	SHEET STEEL	5	GALVANISED	NIDD
46104219	THE BLACKTHORNS	Broughton Parish	495871.42	409351.75	6	7005	00204953	01/04/1995 00:00	1	1	LESS THAN 30MPH	BACK OF FOOTPATH	500	SINGLE ARM	NOT APPLICABLE	RIGID COLUMN	URBIS	AXIA 2 S1	PETITJEAN	SHEET STEEL	5	GALVANISED	NIDD
46104219	THE BLACKTHORNS	Broughton Parish	495866.95	409332.29	7	7006	00204954	01/04/1995 00:00	1	1	LESS THAN 30MPH	BACK OF FOOTPATH	500	SINGLE ARM	NOT APPLICABLE	RIGID COLUMN	URBIS	AXIA 2 S1	PETITJEAN	SHEET STEEL	5	GALVANISED	NIDD
46104221	WALNUT WAY	Messingham Parish	489033.67	404138.84	1	7000	00204955	01/04/1995 00:00	4	1	LESS THAN 30MPH	BACK OF FOOTPATH	0	POST TOP	NOT APPLICABLE	RIGID COLUMN	URBIS	AXIA 2 S1	PETITJEAN	SHEET STEEL	5	GALVANISED	NIDD
46104221	WALNUT WAY	Messingham Parish	489002.53	404130.47	2	7001	00204956	01/04/1995 00:00	4	1	LESS THAN 30MPH	BACK OF FOOTPATH	0	POST TOP	NOT APPLICABLE	RIGID COLUMN	URBIS	AXIA 2 S1	PETITJEAN	SHEET STEEL	5	GALVANISED	NIDD
46104221	WALNUT WAY	Messingham Parish	488964.88	404126.31	3	7002	00204957	01/04/1995 00:00	4	1	LESS THAN 30MPH	BACK OF FOOTPATH	0	POST TOP	NOT APPLICABLE	RIGID COLUMN	URBIS	AXIA 2 S1	PETITJEAN	SHEET STEEL	5	GALVANISED	NIDD
46104222	WOODLAND VIEW	Barnetby Le Wold Parish	506036.04	409911.63	1	7000	00204958	01/04/2001 00:00	3	2	LESS THAN 30MPH	VERGE	0	POST TOP	NOT APPLICABLE	RIGID COLUMN	URBIS	AXIA 2 S1	FABRIKAT	SHEET STEEL	6	GALVANISED	6M03B
46104222	WOODLAND VIEW	Barnetby Le Wold Parish	505821.45	410021.9	10	7010	00204968	01/04/2001 00:00	3	2	LESS THAN 30MPH	BACK OF FOOTPATH	0	POST TOP	NOT APPLICABLE	RIGID COLUMN	URBIS	AXIA 2 S1	PETITJEAN	TUBULAR STEEL	6	GALVANISED	STEPPED TUBULAR
46104222	WOODLAND VIEW	Barnetby Le Wold Parish	505793.16	410031.18	11	7011	00204969	01/04/2001 00:00	3	2	LESS THAN 30MPH	VERGE	0	POST TOP	NOT APPLICABLE	RIGID COLUMN	URBIS	AXIA 2 S1	PETITJEAN	TUBULAR STEEL	6	GALVANISED	STEPPED TUBULAR
46104222	WOODLAND VIEW	Barnetby Le Wold Parish	505770	410035.89	12	7012	00204970	01/04/2001 00:00	3	2	LESS THAN 30MPH	VERGE	0	POST TOP	NOT APPLICABLE	RIGID COLUMN	URBIS	AXIA 2 S1	PETITJEAN	TUBULAR STEEL	6	GALVANISED	STEPPED TUBULAR
46104222	WOODLAND VIEW	Barnetby Le Wold Parish	505745.81	410039.35	13	7020	00204967	01/04/2001 00:00	3	2	LESS THAN 30MPH	BACK OF FOOTPATH	0	POST TOP	NOT APPLICABLE	RIGID COLUMN	URBIS	AXIA 2 S1	PETITJEAN	TUBULAR STEEL	6	GALVANISED	STEPPED TUBULAR
46104222	WOODLAND VIEW	Barnetby Le Wold Parish	506005.87	409915.63	2	7001	00204959	01/04/2001 00:00	3	2	LESS THAN 30MPH	BACK OF FOOTPATH	0	POST TOP	NOT APPLICABLE	RIGID COLUMN	URBIS	AXIA 2 S1	FABRIKAT	SHEET STEEL	6	GALVANISED	6M03B
46104222	WOODLAND VIEW	Barnetby Le Wold Parish	505986.83	409901.97	3	7002	00204960	01/04/2001 00:00	3	2	LESS THAN 30MPH	BACK OF FOOTPATH	0	POST TOP	NOT APPLICABLE	RIGID COLUMN	URBIS	AXIA 2 S1	FABRIKAT	SHEET STEEL	6	GALVANISED	6M03B
46104222	WOODLAND VIEW	Barnetby Le Wold Parish	505955.85	409897.93	4	7003	00204961	01/04/2001 00:00	3	2	LESS THAN 30MPH	BACK OF FOOTPATH	0	POST TOP	NOT APPLICABLE	RIGID COLUMN	URBIS	AXIA 2 S1	FABRIKAT	SHEET STEEL	6	GALVANISED	6M03B
46104222	WOODLAND VIEW	Barnetby Le Wold Parish	505929.35	409907.23	5	7004	00204962	01/04/2001 00:00	3	2	LESS THAN 30MPH	BACK OF FOOTPATH	0	POST TOP	NOT APPLICABLE	RIGID COLUMN	URBIS	AXIA 2 S1	PETITJEAN	TUBULAR STEEL	6	GALVANISED	STEPPED TUBULAR
46104222	WOODLAND VIEW	Barnetby Le Wold Parish	505908.8	409916.68	6	7005	00204963	01/04/2001 00:00	3	2	LESS THAN 30MPH	BACK OF FOOTPATH	0	POST TOP	NOT APPLICABLE	RIGID COLUMN	URBIS	AXIA 2 S1	PETITJEAN	TUBULAR STEEL	6	GALVANISED	STEPPED TUBULAR
46104222	WOODLAND VIEW	Barnetby Le Wold Parish	505883.68	409938.16	7	7006	00204964	01/04/2001 00:00	3	2	LESS THAN 30MPH	BACK OF FOOTPATH	0	POST TOP	NOT APPLICABLE	RIGID COLUMN	URBIS	AXIA 2 S1	FABRIKAT	SHEET STEEL	6	GALVANISED	6M03B
46104222	WOODLAND VIEW	Barnetby Le Wold Parish	505868.88	409965.99	8	7007	00204965	01/04/2001 00:00	3	2	LESS THAN 30MPH	BACK OF FOOTPATH	0	POST TOP	NOT APPLICABLE	RIGID COLUMN	URBIS	AXIA 2 S1	FABRIKAT	SHEET STEEL	6	GALVANISED	6M03B
46104222	WOODLAND VIEW	Barnetby Le Wold Parish	505852.23	409993.32	9	7008	00204966	01/04/2001 00:00	3	2	LESS THAN 30MPH	BACK OF FOOTPATH	0	POST TOP	NOT APPLICABLE	RIGID COLUMN	URBIS	AXIA 2 S1	FABRIKAT	SHEET STEEL	6	GALVANISED	6M03B
46104223	TRINITY WALK	Barton upon Humber Parish	502995.79	422918.93	1	7000	00204971	01/04/2001 00:00	5	2	LESS THAN 30MPH	VERGE	0	POST TOP	NOT APPLICABLE	RIGID COLUMN	URBIS	AXIA 2 S1	MALLATITE	TUBULAR STEEL	6	GALVANISED	STEPPED TUBULAR
46104223	TRINITY WALK	Barton upon Humber Parish	502979.96	422906.1	2	7001	00204972	01/04/2001 00:00	5	2	LESS THAN 30MPH	VERGE	0	POST TOP	NOT APPLICABLE	RIGID COLUMN	URBIS	AXIA 2 S1	MALLATITE	TUBULAR STEEL	6	GALVANISED	STEPPED TUBULAR
46104223	TRINITY WALK	Barton upon Humber Parish	502982.31	422882.61	3	7002	00204973	01/04/2001 00:00	5	2	LESS THAN 30MPH	BACK OF FOOTPATH	0	POST TOP	NOT APPLICABLE	RIGID COLUMN	URBIS	AXIA 2 S1	MALLATITE	TUBULAR STEEL	6	GALVANISED	STEPPED TUBULAR
46104226	WREN CLOSE	Bottesford Parish	489773.9	406752.93	1	7000	00204974	01/04/2001 00:00	3	1	LESS THAN 30MPH	BACK OF FOOTPATH	0	POST TOP	NOT APPLICABLE	RIGID COLUMN	URBIS	AXIA 2 S1	MALLATITE	TUBULAR STEEL	5	GALVANISED	STEPPED TUBULAR
46104226	WREN CLOSE	Bottesford Parish	489742	406776	2	7001	00204975	01/04/2001 00:00	3	1	LESS THAN 30MPH	BACK OF FOOTPATH	0	POST TOP	NOT APPLICABLE	RIGID COLUMN	URBIS	AXIA 2 S1	MALLATITE	TUBULAR STEEL	5	GALVANISED	STEPPED TUBULAR
46104226	WREN CLOSE	Bottesford Parish	489761.09	406778.96	3	7002	00204976	01/04/2001 00:00	3	1	LESS THAN 30MPH	BACK OF FOOTPATH	0	POST TOP	NOT APPLICABLE	RIGID COLUMN	URBIS	AXIA 2 S1	MALLATITE	TUBULAR STEEL	5	GALVANISED	STEPPED TUBULAR
46104229	STANIWELLS DRIVE	Broughton Parish	495615.73	408516.41	1	7000	00204977	01/04/1993 00:00	1	1	LESS THAN 30MPH	BACK OF FOOTPATH	0	POST TOP	NOT APPLICABLE	RIGID COLUMN	URBIS	AXIA 2 S1	PETITJEAN	SHEET STEEL	6	GALVANISED	DAER
46104229	STANIWELLS DRIVE	Broughton Parish	495651.05	408517.6	2	7001	00204978	01/04/1993 00:00	1	1	LESS THAN 30MPH	BACK OF FOOTPATH	0	POST TOP	NOT APPLICABLE	RIGID COLUMN	URBIS	AXIA 2 S1	PETITJEAN	SHEET STEEL	6	GALVANISED	DAER
46104229	STANIWELLS DRIVE	Broughton Parish	495684.48	408519.41	3	7002	00204979	01/04/1993 00:00	1	1	LESS THAN 30MPH	BACK OF FOOTPATH	0	POST TOP	NOT APPLICABLE	RIGID COLUMN	URBIS	AXIA 2 S1	PETITJEAN	SHEET STEEL	6	GALVANISED	DAER
46104229	STANIWELLS DRIVE	Broughton Parish	495702.11	408508.9	4	7003	00204980	01/04/1993 00:00	1	1	LESS THAN 30MPH	BACK OF FOOTPATH	0	POST TOP	NOT APPLICABLE	RIGID COLUMN	URBIS	AXIA 2 S1	PETITJEAN	SHEET STEEL	6	GALVANISED	DAER
46104229	STANIWELLS DRIVE	Broughton Parish	495691.84	408468.3	5	7004	00204981	01/04/1993 00:00	1	1	LESS THAN 30MPH	BACK OF FOOTPATH	0	POST TOP	NOT APPLICABLE	RIGID COLUMN	URBIS	AXIA 2 S1	PETITJEAN	SHEET STEEL	6	GALVANISED	DAER
46104229	STANIWELLS DRIVE	Broughton Parish	495711.86	408454.53	6	7005

46105032	MORTAL ASH HILL	Scunthorpe	492401.8	408379.5	38	7049	00205160	01/04/2015 00:00	3	2	BETWEEN 30-50 MPH	VERGE	1000	SINGLE ARM	NOT APPLICABLE	RIGID COLUMN	PHILIPS	LUMA 2 15 KLM 140 LED	VALMONT ST	SHEET STEEL	12	GALVANISED	THAMES
46105032	MORTAL ASH HILL	Scunthorpe	492414.6	408407.3	39	7050	00205161	01/04/2015 00:00	3	2	BETWEEN 30-50 MPH	VERGE	1000	SINGLE ARM	NOT APPLICABLE	RIGID COLUMN	PHILIPS	LUMA 2 15 KLM 140 LED	VALMONT ST	SHEET STEEL	12	GALVANISED	THAMES
46105032	MORTAL ASH HILL	Scunthorpe	491778.65	408662.47	3X	7002	00205113	01/04/2015 00:00	3	2	BETWEEN 30-50 MPH	VERGE	1000	SINGLE ARM	NOT APPLICABLE	RIGID COLUMN	PHILIPS	LUMA 2 15 KLM 100 LED	VALMONT ST	SHEET STEEL	12	GALVANISED	THAMES
46105032	MORTAL ASH HILL	Scunthorpe	491844.79	408612.54	4	7015	00205126	01/04/2015 00:00	3	2	BETWEEN 30-50 MPH	VERGE	1000	SINGLE ARM	NOT APPLICABLE	RIGID COLUMN	PHILIPS	LUMA 2 15 KLM 140 LED	VALMONT ST	SHEET STEEL	12	GALVANISED	THAMES
46105032	MORTAL ASH HILL	Scunthorpe	492427.8	408368.1	40	7051	00205162	31/03/2023 00:00	3	2	BETWEEN 30-50 MPH	VERGE	1000	SINGLE ARM	NOT APPLICABLE	RIGID COLUMN	PHILIPS	LUMA 2 15 KLM 140 LED	MALLATITE	TUBULAR STEEL	12	GALVANISED	TUBULAR
46105032	MORTAL ASH HILL	Scunthorpe	492444.8	408394.5	41	7052	00205163	01/04/2015 00:00	3	2	BETWEEN 30-50 MPH	VERGE	1000	SINGLE ARM	NOT APPLICABLE	RIGID COLUMN	PHILIPS	LUMA 2 15 KLM 140 LED	VALMONT ST	SHEET STEEL	12	GALVANISED	THAMES
46105032	MORTAL ASH HILL	Scunthorpe	492460.4	408353.2	42	7053	00205164	01/04/2015 00:00	3	2	BETWEEN 30-50 MPH	VERGE	1000	SINGLE ARM	NOT APPLICABLE	RIGID COLUMN	PHILIPS	LUMA 2 15 KLM 140 LED	VALMONT ST	SHEET STEEL	12	GALVANISED	THAMES
46105032	MORTAL ASH HILL	Scunthorpe	492471.9	408379.3	43	7054	00205165	01/04/2015 00:00	3	2	BETWEEN 30-50 MPH	VERGE	1000	SINGLE ARM	NOT APPLICABLE	RIGID COLUMN	PHILIPS	LUMA 2 15 KLM 140 LED	VALMONT ST	SHEET STEEL	12	GALVANISED	THAMES
46105032	MORTAL ASH HILL	Scunthorpe	491781.56	408641.62	4X	7003	00205114	01/04/1978 00:00	3	2	BETWEEN 30-50 MPH	CENTRAL RESERVATION	1250	SINGLE ARM	DARK GREY	RIGID COLUMN	PHILIPS	LUMA 2 15 KLM 100 LED	PETITJEAN	SHEET STEEL	12	PAINTED	THAMES
46105032	MORTAL ASH HILL	Scunthorpe	491901.92	408622.91	5	7016	00205127	01/04/1975 00:00	3	2	BETWEEN 30-50 MPH	BACK OF FOOTPATH	1000	SINGLE ARM	DARK GREY	RIGID COLUMN	PHILIPS	LUMA 2 15 KLM 140 LED	PETITJEAN	SHEET STEEL	12	PAINTED	THAMES
46105032	MORTAL ASH HILL	Scunthorpe	491775.74	408620.77	5X	7004	00205115	01/04/1978 00:00	3	2	BETWEEN 30-50 MPH	VERGE	1500	SINGLE ARM	DARK GREY	RIGID COLUMN	PHILIPS	LUMA 2 15 KLM 100 LED	PETITJEAN	SHEET STEEL	12	PAINTED	THAMES
46105032	MORTAL ASH HILL	Scunthorpe	491898.06	408596.85	6	7017	00205128	01/04/2015 00:00	3	2	BETWEEN 30-50 MPH	VERGE	1000	SINGLE ARM	NOT APPLICABLE	RIGID COLUMN	PHILIPS	LUMA 2 15 KLM 140 LED	VALMONT ST	SHEET STEEL	12	GALVANISED	THAMES
46105032	MORTAL ASH HILL	Scunthorpe	491762.65	408611.07	6X	7005	00205116	01/04/1978 00:00	3	2	BETWEEN 30-50 MPH	VERGE	1250	SINGLE ARM	NOT APPLICABLE	RIGID COLUMN	PHILIPS	LUMA 2 15 KLM 100 LED	PETITJEAN	SHEET STEEL	12	GALVANISED	THAMES
46105032	MORTAL ASH HILL	Scunthorpe	491961.69	408595.93	7	7018	00205129	01/04/2015 00:00	3	2	BETWEEN 30-50 MPH	BACK OF FOOTPATH	1000	SINGLE ARM	NOT APPLICABLE	RIGID COLUMN	PHILIPS	LUMA 2 15 KLM 140 LED	VALMONT ST	SHEET STEEL	12	GALVANISED	THAMES
46105032	MORTAL ASH HILL	Scunthorpe	491745.68	408608.65	7X	7006	00205117	01/04/1978 00:00	3	2	BETWEEN 30-50 MPH	SPLITTER ISLAND	1250	SINGLE ARM	NOT APPLICABLE	RIGID COLUMN	PHILIPS	LUMA 2 15 KLM 100 LED	PETITJEAN	SHEET STEEL	12	GALVANISED	THAMES
46105032	MORTAL ASH HILL	Scunthorpe	491947.85	408576.87	8	7019	00205130	01/04/2015 00:00	3	2	BETWEEN 30-50 MPH	VERGE	1000	SINGLE ARM	NOT APPLICABLE	RIGID COLUMN	PHILIPS	LUMA 2 15 KLM 140 LED	VALMONT ST	SHEET STEEL	12	GALVANISED	THAMES
46105032	MORTAL ASH HILL	Scunthorpe	491725.8	408611.56	8X	7007	00205118	01/04/1978 00:00	3	2	BETWEEN 30-50 MPH	BACK OF FOOTPATH	1250	SINGLE ARM	NOT APPLICABLE	RIGID COLUMN	PHILIPS	LUMA 2 15 KLM 100 LED	PETITJEAN	SHEET STEEL	12	GALVANISED	THAMES
46105032	MORTAL ASH HILL	Scunthorpe	492010.03	408577.56	9	7020	00205131	01/04/2015 00:00	3	2	BETWEEN 30-50 MPH	BACK OF FOOTPATH	1000	SINGLE ARM	NOT APPLICABLE	RIGID COLUMN	PHILIPS	LUMA 2 15 KLM 140 LED	VALMONT ST	SHEET STEEL	12	GALVANISED	THAMES
46105032	MORTAL ASH HILL	Scunthorpe	491712.22	408625.13	9X	7008	00205119	11/03/2021 00:00	3	2	BETWEEN 30-50 MPH	VERGE	1000	SINGLE ARM	NOT APPLICABLE	RIGID COLUMN	PHILIPS	LUMA 2 15 KLM 100 LED	MALLATITE	TUBULAR STEEL	12	GALVANISED	TUBULAR
46105033	MORTAL ASH HILL	Holme Parish	492536.5	408345.81	1	7000	00205166	01/04/1973 00:00	1	4	GREATER THAN 50MPH	BACK OF FOOTPATH	3000	SINGLE ARM	LIGHT GREY	RIGID COLUMN	URBIS	AXIA 2 S1	PETITJEAN	SHEET STEEL	10	PAINTED	FRANCE
46105033	MORTAL ASH HILL	Holme Parish	492694.33	408218.26	10	7009	00205175	01/04/1973 00:00	1	4	GREATER THAN 50MPH	VERGE	3000	SINGLE ARM	LIGHT GREY	RIGID COLUMN	URBIS	AXIA 2 S1	PETITJEAN	SHEET STEEL	10	PAINTED	FRANCE
46105033	MORTAL ASH HILL	Holme Parish	494467.28	407158.51	100	7099	00205265	01/04/1973 00:00	1	4	GREATER THAN 50MPH	VERGE	3000	SINGLE ARM	LIGHT GREY	RIGID COLUMN	URBIS	AXIA 2 S1	PETITJEAN	SHEET STEEL	10	PAINTED	FRANCE
46105033	MORTAL ASH HILL	Holme Parish	494476.96	407185.72	101	7100	00205266	01/04/1973 00:00	1	4	GREATER THAN 50MPH	VERGE	3000	SINGLE ARM	LIGHT GREY	RIGID COLUMN	URBIS	AXIA 2 S1	PETITJEAN	SHEET STEEL	10	PAINTED	FRANCE
46105033	MORTAL ASH HILL	Holme Parish	494508.68	407144.25	102	7101	00205267	01/04/1973 00:00	1	4	GREATER THAN 50MPH	VERGE	3000	SINGLE ARM	LIGHT GREY	RIGID COLUMN	URBIS	AXIA 2 S1	PETITJEAN	SHEET STEEL	10	PAINTED	FRANCE
46105033	MORTAL ASH HILL	Holme Parish	494518.53	407173.13	103	7102	00205268	01/04/1973 00:00	1	4	GREATER THAN 50MPH	VERGE	3000	SINGLE ARM	LIGHT GREY	RIGID COLUMN	URBIS	AXIA 2 S1	PETITJEAN	SHEET STEEL	10	PAINTED	FRANCE
46105033	MORTAL ASH HILL	Holme Parish	494549.8	407130.31	104	7103	00205269	01/04/1973 00:00	1	4	GREATER THAN 50MPH	VERGE	3000	SINGLE ARM	LIGHT GREY	RIGID COLUMN	URBIS	AXIA 2 S1	PETITJEAN	SHEET STEEL	10	PAINTED	FRANCE
46105033	MORTAL ASH HILL	Holme Parish	494560.89	407159.38	105	7104	00205270	01/04/1973 00:00	1	4	GREATER THAN 50MPH	VERGE	3000	SINGLE ARM	LIGHT GREY	RIGID COLUMN	URBIS	AXIA 2 S1	PETITJEAN	SHEET STEEL	10	PAINTED	FRANCE
46105033	MORTAL ASH HILL	Holme Parish	494578.39	407120.55	106	7105	00205271	01/04/1973 00:00	1	4	GREATER THAN 50MPH	VERGE	3000	SINGLE ARM	LIGHT GREY	RIGID COLUMN	URBIS	AXIA 2 S1	PETITJEAN	SHEET STEEL	10	PAINTED	FRANCE
46105033	MORTAL ASH HILL	Holme Parish	494589.38	407148.63	107	7106	00205272	01/04/1973 00:00	1	4	GREATER THAN 50MPH	VERGE	3000	SINGLE ARM	LIGHT GREY	RIGID COLUMN	URBIS	AXIA 2 S1	PETITJEAN	SHEET STEEL	10	PAINTED	FRANCE
46105033	MORTAL ASH HILL	Holme Parish	494606.27	407111.48	108	7107	00205273	01/04/1973 00:00	1	4	GREATER THAN 50MPH	VERGE	3000	SINGLE ARM	LIGHT GREY	RIGID COLUMN	URBIS	AXIA 2 S1	PETITJEAN	SHEET STEEL	10	PAINTED	FRANCE
46105033	MORTAL ASH HILL	Holme Parish	494614.29	407141.04	109FP	7108	00205274	01/04/1973 00:00	1	4	GREATER THAN 50MPH	VERGE	3000	SINGLE ARM	LIGHT GREY	RIGID COLUMN	URBIS	AXIA 2 S1	PETITJEAN	SHEET STEEL	10	PAINTED	FRANCE
46105033	MORTAL ASH HILL	Holme Parish	492754.15	408220.87	11	7010	00205176	01/04/1973 00:00	1	4	GREATER THAN 50MPH	BACK OF FOOTPATH	1500	SINGLE ARM	LIGHT GREY	RIGID COLUMN	URBIS	AXIA 2 S1	PETITJEAN	SHEET STEEL	10	PAINTED	THAMES
46105033	MORTAL ASH HILL	Holme Parish	494637.64	407100.96	110	7109	00205275	01/04/1973 00:00	1	4	GREATER THAN 50MPH	VERGE	3000	SINGLE ARM	LIGHT GREY	RIGID COLUMN	URBIS	AXIA 2 S1	PETITJEAN	SHEET STEEL	10	PAINTED	FRANCE
46105033	MORTAL ASH HILL	Holme Parish	494648.16	407136.74	111	7110	00205276	21/03/2018 00:00	1	4	GREATER THAN 50MPH	VERGE	1000	SINGLE ARM	NOT APPLICABLE	RIGID COLUMN	URBIS	AXIA 2 S1	VALMONT ST	SHEET STEEL	10	GALVANISED	THAMES
46105033	MORTAL ASH HILL	Holme Parish	494669.01	407090.5	112	7111	00205277	01/04/1973 00:00	1	4	GREATER THAN 50MPH	VERGE	3000	SINGLE ARM	LIGHT GREY	RIGID COLUMN	URBIS	AXIA 2 S1	PETITJEAN	SHEET STEEL	10	PAINTED	FRANCE
46105033	MORTAL ASH HILL	Holme Parish	494679.47	407121.05	113	7112	00205278	01/04/1973 00:00	1	4	GREATER THAN 50MPH	VERGE	3000	SINGLE ARM	LIGHT GREY	RIGID COLUMN	URBIS	AXIA 2 S1	PETITJEAN	SHEET STEEL	10	PAINTED	FRANCE
46105033	MORTAL ASH HILL	Holme Parish	494697.24	407082.36	114	7113	00205279	01/04/1973 00:00	1	4	GREATER THAN 50MPH	VERGE	3000	SINGLE ARM	LIGHT GREY	RIGID COLUMN	URBIS	AXIA 2 S1	PETITJEAN	SHEET STEEL	10	PAINTED	FRANCE
46105033	MORTAL ASH HILL	Holme Parish	494705.27	407108.14	115	7114	00205280	01/04/1973 00:00	1	4	GREATER THAN 50MPH	VERGE	3000	SINGLE ARM	LIGHT GREY	RIGID COLUMN	URBIS	AXIA 2 S1	PETITJEAN	SHEET STEEL	10	PAINTED	FRANCE
46105033	MORTAL ASH HILL	Holme Parish	494728.61	407069.81	116	7115	00205281	01/04/1973 00:00	1	4	GREATER THAN 50MPH	VERGE	3000	SINGLE ARM	LIGHT GREY	RIGID COLUMN	URBIS	AXIA 2 S1	PETITJEAN	SHEET STEEL	10	PAINTED	FRANCE
46105033	MORTAL ASH HILL	Holme Parish	494737.23	407091.73	117	7116	00205282	01/04/1973 00:00	1	4	GREATER THAN 50MPH	VERGE	3000	SINGLE ARM	LIGHT GREY	RIGID COLUMN	URBIS	AXIA 2 S1	PETITJEAN	SHEET STEEL	10	PAINTED	FRANCE
46105033	MORTAL ASH HILL	Holme Parish	494766.25	407058.66	118	7117	00205283	01/04/1973 00:00	1	4	GREATER THAN 50MPH	VERGE	3000	SINGLE ARM	LIGHT GREY	RIGID COLUMN	URBIS	AXIA 2 S1	PETITJEAN	SHEET STEEL	10	PAINTED	FRANCE
46105033	MORTAL ASH HILL	Holme Parish	494773.65	407073.61	119	7118	00205284	01/04/1973 00:00	1	4	GREATER THAN 50MPH	VERGE	1250	SINGLE ARM	NOT APPLICABLE	RIGID COLUMN	URBIS	AXIA 2 S1	PETITJEAN	SHEET STEEL	10	GALVANISED	THAMES
46105033	MORTAL ASH HILL	Holme Parish	492737.81	408192.21	12	7011	00205177	01/04/1973 00:00	1	4	GREATER THAN 50MPH	VERGE	3000	SINGLE ARM	LIGHT GREY	RIGID COLUMN	URBIS	AXIA 2 S1	PETITJEAN	SHEET STEEL	10	PAINTED	FRANCE
46105033	MORTAL ASH HILL	Holme Parish	494802.5	407045.41	120	7119	00205285	01/04/1973 00:00	1	4	GREATER THAN 50MPH	VERGE	3000	SINGLE ARM	LIGHT GREY	RIGID COLUMN	URBIS	AXIA 2 S1	PETITJEAN	SHEET STEEL	10	PAINTED	FRANCE
46105033	MORTAL ASH HILL	Holme Parish	494835.96	407034.26	121	7120	00205286	19/02/2021 00:00	1	4	GREATER THAN 50MPH	BACK OF FOOTPATH	1000	SINGLE ARM	NOT APPLICABLE	RIGID COLUMN	URBIS	AXIA 2 S1	MALLATITE	TUBULAR STEEL	10	GALVANISED	TUBULAR
46105033	MORTAL ASH HILL	Holme Parish	494883.36	407033.56	122	7121	00205287	01/04/1973 00:00	1	4	GREATER THAN 50MPH	VERGE	3000	SINGLE ARM	LIGHT GREY	RIGID COLUMN	URBIS	AXIA 2 S1	PETITJEAN	SHEET STEEL	10	PAINTED	FRANCE
46105033	MORTAL ASH HILL	Holme Parish	494918.91	407007.07	123	7122	00205288	01/04/1973 00:00	1	4	GREATER THAN 50MPH	VERGE	3000	SINGLE ARM	LIGHT GREY	RIGID COLUMN	URBIS	AXIA 2 S1	PETITJEAN	SHEET STEEL	10	PAINTED	FRANCE
46105033	MORTAL ASH HILL	Holme Parish	494963.35	407005.54	124	7123	00205289	01/04/1973 00:00	1	4	GREATER THAN 50MPH	VERGE	3000	SINGLE ARM	LIGHT GREY	RIGID COLUMN	URBIS	AXIA 2 S1	PETITJEAN	SHEET STEEL	10	PAINTED	FRANCE
46105033	MORTAL ASH HILL	Holme Parish	494998.97	406979.89	125	7124	00205290	01/04/1973 00:00	1	4	GREATER THAN 50MPH	VERGE	1500	SINGLE ARM	LIGHT GREY	RIGID COLUMN	URBIS	AXIA 2 S1	PETITJEAN	SHEET STEEL	10	PAINTED	FRANCE
46105033	MORTAL ASH HILL	Holme Parish	495033.92	406980.43	126	7125	00205291	01/04/1973 00:00	1	4	GREATER THAN 50MPH	VERGE	2000	SINGLE ARM	LIGHT GREY	RIGID COLUMN	URBIS	AXIA 2 S1	PETITJEAN	SHEET STEEL	10	PAINTED	THAMES
46105033	MORTAL ASH HILL	Holme Parish	495054.77	406956.3	127	7126	00205292	01/04/1973 00:00	1	4	GREATER THAN 50MPH	VERGE	1500	SINGLE ARM	LIGHT GREY	RIGID COLUMN	URBIS	AXIA 2 S1	PETITJEAN	SHEET STEEL	10	PAINTED	THAMES
46105033	MORTAL ASH HILL	Holme Parish	495098.74	406959.65	128	7127	00205293	01/04/1973 00:00	1	4	GREATER THAN 50MPH	VERGE	1500	SINGLE ARM	LIGHT GREY	RIGID COLUMN	URBIS	AXIA 2 S1	PETITJEAN	SHEET STEEL	10	PAINTED	THAMES
46105033	MORTAL ASH HILL	Holme Parish	495128.85	406934.92	129	7128	00205294	01/04/1973 00:00	1	4	GREATER THAN 50MPH	VERGE	1250	SINGLE ARM	LIGHT GREY	RIGID COLUMN	URBIS	AXIA 2 S1	PETITJEAN	SHEET STEEL	10	PAINTED	THAMES
46105033	MORTAL ASH HILL	Holme Parish	492799.85	408192.91	13	7012	00205178	01/04/1973 00:00	1	4	GREATER THAN 50MPH	BACK OF FOOTPATH	3000	SINGLE ARM	LIGHT GREY	RIGID COLUMN	URBIS	AXIA 2 S1	PETITJEAN	SHEET STEEL	10	PAINTED	FRANCE
46105033	MORTAL ASH HILL	Holme Parish	495170.85	406937.66	130	7129	00205295	28/05/2024 00:00	1	4	GREATER THAN 50MPH	VERGE	2000	SINGLE ARM	LIGHT GREY	RIGID COLUMN	URBIS	AXIA 2 S1	MALLATITE	TUBULAR STEEL	10	GALVANISED	MALLATITE
46105033	MORTAL ASH HILL	Holme Parish	495202	406910.88	131	7130	00205296	01/04/1973 00:00	1	4	GREATER THAN 50MPH	VERGE	1250	SINGLE ARM	LIGHT GREY	RIGID COLUMN	URBIS	AXIA 2 S1	PETITJEAN	SHEET STEEL	10	PAINTED	THAMES
46105033	MORTAL ASH HILL	Holme Parish	495252.53	406903.36	132	7131	00205297	01/04/1973 00:00	1	4	GREATER THAN 50MPH	VERGE	2000	SINGLE ARM	LIGHT GREY	RIGID COLUMN	URBIS	AXIA 2 S1	PETITJEAN	SHEET STEEL	10	PAINTED	THAMES
46105033	MORTAL ASH HILL	Holme Parish	495274.3	406881.05	133	7132	00205298	01/04/1973 00:00	1	4	GREATER THAN 50MPH	VERGE	1250	SINGLE ARM	LIGHT GREY	RIGID COLUMN	URBIS	AXIA 2 S1	PETITJEAN	SHEET STEEL	10	PAINTED	THAMES
46105033	MORTAL ASH HILL	Holme Parish	495313.31	406878.71	134	7133	00205299	01/04/1973 00:00	1	4	GREATER THAN 50MPH	VERGE	1500	SINGLE ARM	LIGHT GREY	RIGID COLUMN	URBIS	AXIA 2 S1	PETITJEAN	SHEET STEEL	10	PAINTED	THAMES
46105033	MORTAL ASH HILL	Holme Parish	495342.88	406852.9	135	7134	00205300	01/04/1973 00:00	1	4	GREATER THAN 50MPH	VERGE	1250	SINGLE ARM	NOT APPLICABLE	RIGID COLUMN	URBIS	AXIA 2 S1	PETITJEAN	SHEET STEEL	10	GALVANISED	THAMES
46105033	MORTAL ASH HILL	Holme Parish	495385.1	406851.37	136	7135	00205301	01/04/1973 00:00	1	4	GREATER THAN 50MPH	VERGE	1500	SINGLE ARM	LIGHT GREY	RIGID COLUMN	URBIS	AXIA 2 S1	PETITJEAN	SHEET STEEL	10	PAINTED	THAMES
46105033	MORTAL ASH HILL	Holme Parish	495381.33	406835.24	137	7136	00205302	01/04/1973 00:00	1	4	GREATER THAN 50MPH	VERGE	1250	SINGLE ARM	LIGHT GREY	RIGID COLUMN	URBIS	AXIA 2 S1	PETITJEAN	SHEET STEEL	10	PAINTED	THAMES
46105033	MORTAL ASH HILL	Holme Parish	495426.93	406836.02	138	7137	00205303	01/04/1973 00:00	1	4	GREATER THAN 50MPH	VERGE	1500	SINGLE ARM	LIGHT GREY	RIGID COLUMN	URBIS	AXIA 2 S1	PETITJEAN	SHEET STEEL	10	PAINTED	THAMES
46105033	MORTAL ASH HILL	Holme Parish	495414.56	406819.35	139	7138	00205304	01/04/1973 00:00	1	4	GREATER THAN 50MPH	VERGE	1250	SINGLE ARM	LIGHT GREY	RIGID COLUMN	URBIS	AXIA 2 S1	PETITJEAN	SHEET STEEL	10	PAINTED	THAMES
46105033	MORTAL ASH HILL	Holme Parish	492778.56	408167.09	14	7013	00205179	01/04/1973 00:00	1	4	GREATER THAN 50MPH	VERGE	3000	SINGLE ARM	LIGHT GREY	RIGID COLUMN	URBIS	AXIA 2 S1	PETITJEAN	SHEET STEEL	10	PAINTED	FRANCE
46105033	MORTAL ASH HILL	Holme Parish	495461.34	406821.5	140	7139	00205305	01/04/1973 00:00	1	4	GREATER THAN 50MPH	VERGE	1500	SINGLE ARM	LIGHT GREY	RIGID COLUMN	URBIS	AXIA 2 S1	PETITJEAN	SHEET STEEL	10	PAINTED	THAMES
46105033	MORTAL ASH HILL	Holme Parish	495452.73	406802.15	141	7140	00205306	01/04/1973 00:00	1	4	GREATER THAN 50MPH	VERGE	1250	SINGLE ARM	LIGHT GREY	RIGID COLUMN	URBIS	AXIA 2 S1	PETITJEAN	SHEET STEEL	10	PAINTED	THAMES
46105033	MORTAL ASH HILL	Holme Parish	495502.2	406803.76	142	7141	00205307	01/04/1973 00:00	1	4	GREATER THAN 50MPH	VERGE	1500	SINGLE ARM	LIGHT GREY	RIGID COLUMN	URBIS	AXIA 2 S1	PETITJEAN	SHEET STEEL	10	PAINTED	THAMES
46105033	MORTAL ASH HILL	Holme Parish	495490.91	406782.79	143	7142	00205308	01/04/1973 00:00	1	4	GREATER THAN 50MPH	VERGE	1250	SINGLE ARM	LIGHT GREY	RIGID COLUMN	URBIS	AXIA 2 S1	PETITJEAN	SHEET STEEL	10	PAINTED	THAMES
46105033	MORTAL ASH HILL	Holme Parish	495539.36	406786.6	144	7143	00205309	01/04/1973 00:00	1	4	GREATER THAN 50MPH	VERGE	1500	SINGLE ARM	LIGHT GREY	RIGID COLUMN	URBIS	AXIA 2 S1	PETITJEAN	SHEET STEEL	10	PAINTED	THAMES
46105033	MORTAL ASH HILL	Holme Parish	495526.99	406764.56	145	7144	00205310	01/04/1973 00:00	1	4	GREATER THAN 50MPH	VERGE	1250	SINGLE ARM	LIGHT GREY	RIGID COLUMN	URBIS	AXIA 2 S1	PETITJEAN	SHEET STEEL	10	PAINTED	THAMES
46105033	MORTAL ASH HILL	Holme Parish	495575.38	406766.17	146	7145	00205311	01/04/1973 00:00	1	4	GREATER THAN 50MPH	VERGE	1500	SINGLE ARM	LIGHT GREY	RIGID COLUMN	URBIS	AXIA 2 S1	PETITJEAN	SHEET STEEL	10	PAINTED	THAMES
46105033	MORTAL ASH HILL	Holme Parish	495563.02	406745.2	147	7146	00205312	01/04/1973 00:00	1	4	GREATER THAN 50MPH	VERGE	1000	SINGLE ARM	LIGHT GREY	RIGID COLUMN	URBIS	AXIA 2 S1	PETITJEAN	SHEET STEEL	10	PAINTED	THAMES
46105033	MORTAL ASH HILL	Holme Parish	495605	406751.61	148	7147	00205313	01/04/1973 00:00	1	4	GREATER THAN 50MPH	VERGE	1500	SINGLE ARM	LIGHT GREY	RIGID COLUMN	URBIS	AXIA 2 S1	PETITJEAN	SHEET STEEL	10	PAINTED	THAMES
46105033	MORTAL ASH HILL	Holme Parish	495588.87	406729.03	149	7148	00205314	01/04/1973 00:00	1	4	GREATER THAN 50MPH	VERGE	1250	SINGLE ARM	LIGHT GREY	RIGID COLUMN	URBIS	AXIA 2 S1	PETITJEAN	SHEET STEEL	10	PAINTED	THAMES
46105033	MORTAL ASH HILL	Holme Parish	492838.77	408167.51	15	7014	00205180	01/04/1973 00:00	1	4	GREATER THAN 50MPH	BACK OF FOOTPATH	3000	SINGLE ARM	LIGHT GREY	RIGID COLUMN	URBIS	AXIA 2 S1	PETITJEAN	SHEET STEEL	10	PAINTED	FRANCE
46105033	MORTAL ASH HILL	Holme Parish	495631.88	406740.85	150	7149	00205315	01/04/1973 00:00	1	4	GREATER THAN 50MPH	VERGE	1500	SINGLE ARM	LIGHT GREY	RIGID COLUMN	URBIS	AXIA 2 S1	PETITJEAN	SHEET STEEL	10	PAINTED	THAMES
46105033	MORTAL ASH HILL	Holme Parish	495610.38	406706.45	151	7150	00205316	01/04/1973 00:00	1	4	GREATER THAN 50MPH	VERGE	1250	SINGLE ARM	LIGHT GREY	RIGID COLUMN	URBIS	AXIA 2 S1	PETITJEAN	SHEET STEEL	10	PAINTED	THAMES
46105033	MORTAL ASH HILL	Holme Parish	492821.09	408141.1	16	7015	00205181	01/04/1973 00:00	1	4	GREATER THAN 50MPH	VERGE	3000	SINGLE ARM	LIGHT GREY	RIGID COLUMN	URBIS	AXIA 2 S1	PETITJEAN	SHEET STEEL	10	PAINTED	FRANCE
46105033	MORTAL ASH HILL	Holme Parish	492882.64	408140.24	17	7016	00205182	01/04/1973 00:00	1	4	GREATER THAN 50MPH	BACK OF FOOTPATH	3000	SINGLE ARM	LIGHT GREY	RIGID COLUMN	URBIS	AXIA 2 S1	PETITJEAN	SHEET STEEL	10	PAINTED	FRANCE
46105033	MORTAL ASH HILL	Holme Parish	492861.38	408115.45	18	7017	00205183	01/04/1973 00:00	1	4	GREATER THAN 50MPH	VERGE	3000	SINGLE ARM	LIGHT GREY	RIGID COLUMN	URBIS	AXIA 2 S1	PETITJEAN	SHEET STEEL	10	PAINTED	FRANCE
46105033	MORTAL ASH HILL	Holme Parish	492923.8	408111.07	19	7018	00205184	14/01/2022 00:00	1	4	GREATER THAN 50MPH	VERGE	1000	SINGLE ARM	NOT APPLICABLE	RIGID COLUMN	URBIS	AXIA 2 S1	MALLATITE	TUBULAR STEEL	10	GALVANISED	TUBULAR
46105033	MORTAL ASH HILL	Holme Parish	492516.15	408321.57	2	7001	00205167	01/04/1973 00:00	1	4	GREATER THAN 50MPH	VERGE	3000	SINGLE ARM	LIGHT GREY	RIGID COLUMN	URBIS	AXIA 2 S1	PETITJEAN	SHEET STEEL	10	PAINTED	FRANCE
46105033	MORTAL ASH HILL	Holme Parish	492901.34	408086.9	20	7019	00205185	01/04/1973 00:00	1	4	GREATER THAN 50MPH	VERGE	3000	SINGLE ARM	LIGHT GREY	RIGID COLUMN	URBIS	AXIA 2 S1	PETITJEAN	SHEET STEEL	10	PAINTED	FRANCE
46105033	MORTAL ASH HILL	Holme Parish	492965.77	408079.49	21	7020	00205186	01/04/1973 00:00	1	4	GREATER THAN 50MPH	BACK OF FOOTPATH	3000	SINGLE ARM	LIGHT GREY	RIGID COLUMN	URBIS	AXIA 2 S1	PETITJEAN	SHEET STEEL	10	PAINTED	FRANCE
46105033	MORTAL ASH HILL	Holme Parish	492947.87	408055.87	22	7021	00205187	01/04/1973 00:00	1	4	GREATER THAN 50MPH	VERGE	1500	SINGLE ARM	LIGHT GREY	RIGID COLUMN	URBIS	AXIA 2 S1	PETITJEAN	SHEET STEEL	10	PAINTED	THAMES
46105033	MORTAL ASH HILL	Holme Parish	493009.1	408046.57	23	7022	00205188	01/04/1973 00:00	1	4	GREATER THAN 50MPH	BACK OF FOOTPATH	3000	SINGLE ARM	LIGHT GREY	RIGID COLUMN	URBIS	AXIA 2 S1	PETITJEAN	SHEET STEEL	10	PAINTED	FRANCE
46105033	MORTAL ASH HILL	Holme Parish	492991.72	408024.53	24	7023	00205189	01/04/1973 00:00	1	4	GREATER THAN 50MPH	VERGE	3000	SINGLE ARM	LIGHT GREY	RIGID COLUMN	URBIS	AXIA 2 S1	PETITJEAN	SHEET STEEL	10

46105046	ERMINE STREET	Appleby Parish	495217.63	413087.37	11	7025	00205442	01/04/1982 00:00	1	2	GREATER THAN 50MPH	BACK OF FOOTPATH	800	SINGLE ARM	MID GREY	RIGID COLUMN	HOLOPHANE	VMAX V1 L044 LED	PETITJEAN	SHEET STEEL	5	PAINTED	DAER
46105046	ERMINE STREET	Appleby Parish	494922.91	414833.29	11	7010	00205427	01/06/2018 00:00	1	2	LESS THAN 30MPH	ON POLE	300	SINGLE ARM	NOT APPLICABLE	POLE MOUNTED	URBIS	AXIA 2 S1	WOODEN PO	WOOD	5	NOT APPLICABI	PUDSEY DIAMOND
46105046	ERMINE STREET	Appleby Parish	495211.79	413116.68	12	7026	00205443	01/04/1982 00:00	1	2	GREATER THAN 50MPH	BACK OF FOOTPATH	800	SINGLE ARM	MID GREY	RIGID COLUMN	HOLOPHANE	VMAX V1 L044 LED	PETITJEAN	SHEET STEEL	5	PAINTED	DAER
46105046	ERMINE STREET	Appleby Parish	494917.04	414874.03	12	7011	00205428	01/06/2018 00:00	1	2	LESS THAN 30MPH	ON POLE	300	SINGLE ARM	NOT APPLICABLE	POLE MOUNTED	URBIS	AXIA 2 S1	WOODEN PO	WOOD	5	NOT APPLICABI	PUDSEY DIAMOND
46105046	ERMINE STREET	Appleby Parish	495205.81	413147.14	13	7027	00205444	01/04/1982 00:00	1	2	GREATER THAN 50MPH	BACK OF FOOTPATH	800	SINGLE ARM	MID GREY	RIGID COLUMN	HOLOPHANE	VMAX V1 L044 LED	PETITJEAN	SHEET STEEL	5	PAINTED	DAER
46105046	ERMINE STREET	Appleby Parish	494916.97	414904.07	13	7012	00205429	01/04/1982 00:00	1	2	LESS THAN 30MPH	VERGE	300	SINGLE ARM	NOT APPLICABLE	RIGID COLUMN	URBIS	AXIA 2 S1	PETITJEAN	SHEET STEEL	5	GALVANISED	DAER
46105046	ERMINE STREET	Appleby Parish	495189.62	413172.15	14	7028	00205445	01/04/1982 00:00	1	2	GREATER THAN 50MPH	VERGE	800	SINGLE ARM	MID GREY	RIGID COLUMN	HOLOPHANE	VMAX V1 L044 LED	PETITJEAN	SHEET STEEL	5	PAINTED	DAER
46105046	ERMINE STREET	Appleby Parish	494910.92	414939.62	14FP	7013	00205430	10/09/2018 00:00	1	2	LESS THAN 30MPH	VERGE	0	POST TOP	NOT APPLICABLE	RIGID COLUMN	URBIS	AXIA 2 S1	VALMONT ST	TUBULAR STEEL	6	GALVANISED	TUBULAR
46105046	ERMINE STREET	Appleby Parish	495183.96	413202.24	15	7029	00205446	01/04/1982 00:00	1	2	GREATER THAN 50MPH	VERGE	800	SINGLE ARM	MID GREY	RIGID COLUMN	HOLOPHANE	VMAX V1 L044 LED	PETITJEAN	SHEET STEEL	5	PAINTED	DAER
46105046	ERMINE STREET	Appleby Parish	494905.87	414967.64	15	7014	00205431	01/04/1982 00:00	1	2	LESS THAN 30MPH	VERGE	300	SINGLE ARM	MID GREY	RIGID COLUMN	URBIS	AXIA 2 S1	PETITJEAN	SHEET STEEL	5	PAINTED	DAER
46105046	ERMINE STREET	Appleby Parish	495177.75	413230.41	16	7030	00205447	01/04/1982 00:00	1	2	GREATER THAN 50MPH	VERGE	800	SINGLE ARM	MID GREY	RIGID COLUMN	HOLOPHANE	VMAX V1 L044 LED	PETITJEAN	SHEET STEEL	5	PAINTED	DAER
46105046	ERMINE STREET	Appleby Parish	495259.97	412781.66	1FP	7015	00205432	01/04/1990 00:00	1	2	GREATER THAN 50MPH	BACK OF FOOTPATH	1000	SINGLE ARM	NOT APPLICABLE	RIGID COLUMN	HOLOPHANE	VMAX V1 L044 LED	T AND L	TUBULAR STEEL	5	GALVANISED	STEPPED TUBULAR
46105046	ERMINE STREET	Appleby Parish	494970.32	414501.56	2	7001	00205418	01/04/1990 00:00	1	2	LESS THAN 30MPH	VERGE	800	SINGLE ARM	MID GREY	RIGID COLUMN	URBIS	AXIA 2 S1	PETITJEAN	SHEET STEEL	6	PAINTED	DAER
46105046	ERMINE STREET	Appleby Parish	495255.25	412813.95	2	7016	00205433	01/04/1990 00:00	1	2	GREATER THAN 50MPH	BACK OF FOOTPATH	800	SINGLE ARM	NOT APPLICABLE	RIGID COLUMN	HOLOPHANE	VMAX V1 L044 LED	PETITJEAN	SHEET STEEL	5	GALVANISED	DAER
46105046	ERMINE STREET	Appleby Parish	495251.94	412839.54	3	7017	00205434	01/04/1990 00:00	1	2	GREATER THAN 50MPH	BACK OF FOOTPATH	800	SINGLE ARM	MID GREY	RIGID COLUMN	HOLOPHANE	VMAX V1 L044 LED	PETITJEAN	SHEET STEEL	5	PAINTED	DAER
46105046	ERMINE STREET	Appleby Parish	494966.06	414527.87	3	7002	00205419	01/04/1990 00:00	1	2	LESS THAN 30MPH	VERGE	800	SINGLE ARM	MID GREY	RIGID COLUMN	URBIS	AXIA 2 S1	PETITJEAN	SHEET STEEL	6	PAINTED	DAER
46105046	ERMINE STREET	Appleby Parish	495250.51	412869.94	4	7018	00205435	01/04/2015 00:00	1	2	GREATER THAN 50MPH	VERGE	0	POST TOP	NOT APPLICABLE	RIGID COLUMN	HOLOPHANE	VMAX V1 L044 LED	MALLATITE	TUBULAR STEEL	6	GALVANISED	TUBULAR
46105046	ERMINE STREET	Appleby Parish	494961.6	414554.77	4FP	7003	00205420	01/04/1990 00:00	1	2	LESS THAN 30MPH	VERGE	800	SINGLE ARM	MID GREY	RIGID COLUMN	URBIS	AXIA 2 S1	PETITJEAN	SHEET STEEL	6	PAINTED	DAER
46105046	ERMINE STREET	Appleby Parish	494958.75	414576.46	5	7004	00205421	01/04/1993 00:00	1	2	LESS THAN 30MPH	VERGE	800	SINGLE ARM	MID GREY	RIGID COLUMN	URBIS	AXIA 2 S1	PETITJEAN	SHEET STEEL	6	PAINTED	DAER
46105046	ERMINE STREET	Appleby Parish	495243.96	412903.94	5	7019	00205436	01/04/1993 00:00	1	2	GREATER THAN 50MPH	BACK OF FOOTPATH	800	SINGLE ARM	MID GREY	RIGID COLUMN	HOLOPHANE	VMAX V1 L044 LED	PETITJEAN	SHEET STEEL	5	PAINTED	DAER
46105046	ERMINE STREET	Appleby Parish	495240.17	412935.22	6	7020	00205437	01/04/1982 00:00	1	2	GREATER THAN 50MPH	BACK OF FOOTPATH	800	SINGLE ARM	MID GREY	RIGID COLUMN	HOLOPHANE	VMAX V1 L044 LED	PETITJEAN	SHEET STEEL	5	PAINTED	DAER
46105046	ERMINE STREET	Appleby Parish	494952.71	414616.99	6	7005	00205422	01/06/2018 00:00	1	2	LESS THAN 30MPH	ON POLE	300	SINGLE ARM	NOT APPLICABLE	POLE MOUNTED	URBIS	AXIA 2 S1	WOODEN PO	WOOD	4	NOT APPLICABI	PUDSEY DIAMOND
46105046	ERMINE STREET	Appleby Parish	495235.61	412965.86	7	7021	00205438	01/04/1982 00:00	1	2	GREATER THAN 50MPH	BACK OF FOOTPATH	800	SINGLE ARM	NOT APPLICABLE	RIGID COLUMN	HOLOPHANE	VMAX V1 L044 LED	PETITJEAN	SHEET STEEL	5	GALVANISED	DAER
46105046	ERMINE STREET	Appleby Parish	494949.04	414666.81	7	7006	00205423	01/04/2015 00:00	1	2	LESS THAN 30MPH	ON POLE	500	SINGLE ARM	NOT APPLICABLE	POLE MOUNTED	URBIS	AXIA 2 S1	WOODEN PO	WOOD	4	NOT APPLICABI	Not Applicable
46105046	ERMINE STREET	Appleby Parish	494944.78	414704.49	8	7007	00205424	01/06/2018 00:00	1	2	LESS THAN 30MPH	ON POLE	300	SINGLE ARM	NOT APPLICABLE	POLE MOUNTED	URBIS	AXIA 2 S1	WOODEN PO	ALUMINIUM	5	NOT APPLICABI	PUDSEY DIAMOND
46105046	ERMINE STREET	Appleby Parish	495231.75	412993.84	8FP	7022	00205439	01/04/1982 00:00	1	2	GREATER THAN 50MPH	BACK OF FOOTPATH	800	SINGLE ARM	NOT APPLICABLE	RIGID COLUMN	HOLOPHANE	VMAX V1 L044 LED	PETITJEAN	SHEET STEEL	5	GALVANISED	DAER
46105046	ERMINE STREET	Appleby Parish	495226.96	413025.87	9	7023	00205440	01/04/1982 00:00	1	2	GREATER THAN 50MPH	BACK OF FOOTPATH	800	SINGLE ARM	MID GREY	RIGID COLUMN	HOLOPHANE	VMAX V1 L044 LED	PETITJEAN	SHEET STEEL	5	PAINTED	DAER
46105046	ERMINE STREET	Appleby Parish	494937	414753.25	9	7008	00205425	01/06/2018 00:00	1	2	LESS THAN 30MPH	ON POLE	300	SINGLE ARM	NOT APPLICABLE	POLE MOUNTED	URBIS	AXIA 2 S1	WOODEN PO	WOOD	5	NOT APPLICABI	PUDSEY DIAMOND
46105047	ERMINE STREET	Broughton Parish	495730.29	408637.94	1	7000	00205448	05/12/2018 00:00	1	1	LESS THAN 30MPH	ON POLE	300	SINGLE ARM	DARK GREY	POLE MOUNTED	URBIS	AXIA 2 S1	WOODEN PO	WOOD	6	PAINTED	PUDSEY DIAMOND
46105047	ERMINE STREET	Broughton Parish	495693.04	406752.55	1	7020	00205468	01/04/1978 00:00	1	1	GREATER THAN 50MPH	SPLITTER ISLAND	1000	DOUBLE ARM	MID GREY	RIGID COLUMN	URBIS	AXIA 2 S1	PETITJEAN	SHEET STEEL	10	PAINTED	THAMES
46105047	ERMINE STREET	Broughton Parish	495612.61	408403.47	10	7009	00205457	05/12/2018 00:00	1	1	LESS THAN 30MPH	ON POLE	300	SINGLE ARM	DARK GREY	POLE MOUNTED	URBIS	AXIA 2 S1	WOODEN PO	WOOD	6	PAINTED	PUDSEY DIAMOND
46105047	ERMINE STREET	Broughton Parish	495617.2	408358.11	11	7010	00205458	01/04/2019 00:00	1	1	LESS THAN 30MPH	VERGE	300	SINGLE ARM	NOT APPLICABLE	POLE MOUNTED	URBIS	AXIA 2 S1	WOODEN PO	WOOD	6	NOT APPLICABI	PUDSEY DIAMOND
46105047	ERMINE STREET	Broughton Parish	495624.41	408314.54	12	7011	00205459	05/12/2018 00:00	1	1	LESS THAN 30MPH	ON POLE	300	SINGLE ARM	DARK GREY	POLE MOUNTED	URBIS	AXIA 2 S1	WOODEN PO	WOOD	6	PAINTED	PUDSEY DIAMOND
46105047	ERMINE STREET	Broughton Parish	495626.54	408269.6	13	7012	00205460	01/04/2019 00:00	1	1	LESS THAN 30MPH	VERGE	300	SINGLE ARM	NOT APPLICABLE	POLE MOUNTED	URBIS	AXIA 2 S1	WOODEN PO	WOOD	6	NOT APPLICABI	PUDSEY DIAMOND
46105047	ERMINE STREET	Broughton Parish	495633.08	408218.61	14	7013	00205461	05/12/2018 00:00	1	1	LESS THAN 30MPH	ON POLE	300	SINGLE ARM	DARK GREY	POLE MOUNTED	URBIS	AXIA 2 S1	WOODEN PO	WOOD	6	PAINTED	PUDSEY DIAMOND
46105047	ERMINE STREET	Broughton Parish	495624	408170.19	15	7014	00205462	01/04/1980 00:00	1	1	LESS THAN 30MPH	VERGE	800	SINGLE ARM	MID GREY	RIGID COLUMN	URBIS	AXIA 2 S1	PETITJEAN	SHEET STEEL	6	PAINTED	DAER
46105047	ERMINE STREET	Broughton Parish	495635.78	408130.67	16	7015	00205463	01/04/1980 00:00	1	1	LESS THAN 30MPH	BACK OF FOOTPATH	800	SINGLE ARM	MID GREY	RIGID COLUMN	URBIS	AXIA 2 S1	PETITJEAN	SHEET STEEL	6	PAINTED	DAER
46105047	ERMINE STREET	Broughton Parish	495627.92	408096.79	17FP	7016	00205464	01/04/1980 00:00	1	1	LESS THAN 30MPH	VERGE	800	SINGLE ARM	MID GREY	RIGID COLUMN	URBIS	AXIA 2 S1	PETITJEAN	SHEET STEEL	6	PAINTED	DAER
46105047	ERMINE STREET	Broughton Parish	495641.17	408067.77	18	7017	00205465	01/04/1974 00:00	1	1	LESS THAN 30MPH	ON POLE	500	SINGLE ARM	NOT APPLICABLE	POLE MOUNTED	URBIS	AXIA 2 S1	WOODEN PO	WOOD	6	NOT APPLICABI	Not Applicable
46105047	ERMINE STREET	Broughton Parish	495632.05	408018.24	19	7018	00205466	01/04/1980 00:00	1	1	LESS THAN 30MPH	VERGE	800	SINGLE ARM	MID GREY	RIGID COLUMN	URBIS	AXIA 2 S1	PETITJEAN	SHEET STEEL	6	PAINTED	DAER
46105047	ERMINE STREET	Broughton Parish	495705.14	406775.36	2	7021	00205469	01/04/1978 00:00	1	1	GREATER THAN 50MPH	VERGE	1250	SINGLE ARM	MID GREY	RIGID COLUMN	URBIS	AXIA 2 S1	PETITJEAN	SHEET STEEL	10	PAINTED	THAMES
46105047	ERMINE STREET	Broughton Parish	495710.15	408642.66	2	7001	00205449	01/04/1980 00:00	1	1	LESS THAN 30MPH	VERGE	800	SINGLE ARM	MID GREY	RIGID COLUMN	URBIS	AXIA 2 S1	PETITJEAN	SHEET STEEL	6	PAINTED	DAER
46105047	ERMINE STREET	Broughton Parish	495645.26	407979.71	20	7019	00205467	01/04/1974 00:00	1	1	LESS THAN 30MPH	ON POLE	500	SINGLE ARM	NOT APPLICABLE	POLE MOUNTED	URBIS	AXIA 2 S1	WOODEN PO	WOOD	6	NOT APPLICABI	Not Applicable
46105047	ERMINE STREET	Broughton Parish	495673.82	408636.55	3	7002	00205450	01/04/1980 00:00	1	1	LESS THAN 30MPH	VERGE	800	SINGLE ARM	MID GREY	RIGID COLUMN	URBIS	AXIA 2 S1	PETITJEAN	SHEET STEEL	6	PAINTED	DAER
46105047	ERMINE STREET	Broughton Parish	495640.76	408623.58	4	7003	00205451	01/04/2016 00:00	1	1	LESS THAN 30MPH	VERGE	0	POST TOP	NOT APPLICABLE	RIGID COLUMN	URBIS	AXIA 2 S1	MALLATITE	TUBULAR STEEL	6	GALVANISED	TUBULAR
46105047	ERMINE STREET	Broughton Parish	495609.13	408595.11	5	7004	00205452	01/04/1980 00:00	1	1	LESS THAN 30MPH	VERGE	0	POST TOP	NOT APPLICABLE	RIGID COLUMN	URBIS	AXIA 2 S1	MALLATITE	TUBULAR STEEL	6	GALVANISED	TUBULAR
46105047	ERMINE STREET	Broughton Parish	495596.86	408559.93	6FP	7005	00205453	01/04/1980 00:00	1	1	LESS THAN 30MPH	VERGE	800	SINGLE ARM	MID GREY	RIGID COLUMN	URBIS	AXIA 2 S1	PETITJEAN	SHEET STEEL	6	PAINTED	DAER
46105047	ERMINE STREET	Broughton Parish	495595.55	408526.02	7FP	7006	00205454	01/04/1980 00:00	1	1	LESS THAN 30MPH	VERGE	800	SINGLE ARM	NOT APPLICABLE	RIGID COLUMN	URBIS	AXIA 2 S1	PETITJEAN	SHEET STEEL	6	GALVANISED	DAER
46105047	ERMINE STREET	Broughton Parish	495594.33	408495.3	8	7007	00205455	01/04/1980 00:00	1	1	LESS THAN 30MPH	VERGE	800	SINGLE ARM	NOT APPLICABLE	RIGID COLUMN	URBIS	AXIA 2 S1	PETITJEAN	SHEET STEEL	6	GALVANISED	DAER
46105047	ERMINE STREET	Broughton Parish	495605.39	408447.13	9	7008	00205456	01/04/2019 00:00	1	1	LESS THAN 30MPH	VERGE	300	SINGLE ARM	NOT APPLICABLE	POLE MOUNTED	URBIS	AXIA 2 S1	WOODEN PO	WOOD	6	NOT APPLICABI	PUDSEY DIAMOND
46105048	ERMINE STREET	Scawby Parish	495781.11	405359.59	1	7000	00205470	01/04/1990 00:00	2	2	GREATER THAN 50MPH	VERGE	0	POST TOP	NOT APPLICABLE	RIGID COLUMN	URBIS	AXIA 2 S1	PETITJEAN	SHEET STEEL	5	GALVANISED	NIDD
46105048	ERMINE STREET	Scawby Parish	495787.03	405383.24	2	7001	00205471	01/04/1990 00:00	2	2	GREATER THAN 50MPH	VERGE	0	POST TOP	NOT APPLICABLE	RIGID COLUMN	URBIS	AXIA 2 S1	PETITJEAN	SHEET STEEL	5	GALVANISED	NIDD
46105048	ERMINE STREET	Scawby Parish	495784.47	405418.38	3	7002	00205472	01/04/1990 00:00	2	2	GREATER THAN 50MPH	VERGE	0	POST TOP	NOT APPLICABLE	RIGID COLUMN	URBIS	AXIA 2 S1	PETITJEAN	SHEET STEEL	5	GALVANISED	NIDD
46105048	ERMINE STREET	Scawby Parish	495783.43	405447.65	4	7003	00205473	01/04/1990 00:00	2	2	GREATER THAN 50MPH	VERGE	0	POST TOP	NOT APPLICABLE	RIGID COLUMN	URBIS	AXIA 2 S1	PETITJEAN	SHEET STEEL	5	GALVANISED	NIDD
46105048	ERMINE STREET	Scawby Parish	495782.35	405476.68	5	7004	00205474	01/04/1990 00:00	2	2	GREATER THAN 50MPH	VERGE	0	POST TOP	NOT APPLICABLE	RIGID COLUMN	URBIS	AXIA 2 S1	PETITJEAN	SHEET STEEL	5	GALVANISED	NIDD
46105050	ERMINE STREET	Redbourne Parish	496115.62	399363.41	1	7000	00206306	01/04/1995 00:00	1	1	GREATER THAN 50MPH	VERGE	2000	SINGLE ARM	NOT APPLICABLE	RIGID COLUMN	URBIS	AXIA 2 S1	PETITJEAN	SHEET STEEL	10	GALVANISED	THAMES
46105050	ERMINE STREET	Redbourne Parish	496132.73	399145.86	10	7009	00206315	01/04/1998 00:00	1	1	GREATER THAN 50MPH	VERGE	2000	SINGLE ARM	NOT APPLICABLE	RIGID COLUMN	URBIS	AXIA 2 S1	PETITJEAN	SHEET STEEL	10	GALVANISED	THAMES
46105050	ERMINE STREET	Redbourne Parish	496153.3	399114.84	11	7010	00206316	01/04/1995 00:00	1	1	GREATER THAN 50MPH	VERGE	2000	SINGLE ARM	NOT APPLICABLE	RIGID COLUMN	URBIS	AXIA 2 S1	PETITJEAN	SHEET STEEL	10	GALVANISED	THAMES
46105050	ERMINE STREET	Redbourne Parish	496139.15	399082.96	12	7011	00206317	01/04/1995 00:00	1	1	GREATER THAN 50MPH	VERGE	2000	SINGLE ARM	NOT APPLICABLE	RIGID COLUMN	URBIS	AXIA 2 S1	PETITJEAN	SHEET STEEL	10	GALVANISED	THAMES
46105050	ERMINE STREET	Redbourne Parish	496156.45	399053.25	13	7012	00206318	01/04/1995 00:00	1	1	GREATER THAN 50MPH	VERGE	2000	SINGLE ARM	NOT APPLICABLE	RIGID COLUMN	URBIS	AXIA 2 S1	CU	SHEET STEEL	10	GALVANISED	THAMES
46105050	ERMINE STREET	Redbourne Parish	496132.54	399338.58	2	7001	00206307	01/04/1995 00:00	1	1	GREATER THAN 50MPH	VERGE	2000	SINGLE ARM	NOT APPLICABLE	RIGID COLUMN	URBIS	AXIA 2 S1	PETITJEAN	SHEET STEEL	10	GALVANISED	THAMES
46105050	ERMINE STREET	Redbourne Parish	496119.76	399303.22	3	7002	00206308	01/04/1995 00:00	1	1	GREATER THAN 50MPH	VERGE	2000	SINGLE ARM	NOT APPLICABLE	RIGID COLUMN	URBIS	AXIA 2 S1	PETITJEAN	SHEET STEEL	10	GALVANISED	THAMES
46105050	ERMINE STREET	Redbourne Parish	496137.69	399275.47	4	7003	00206309	01/04/1995 00:00	1	1	GREATER THAN 50MPH	VERGE	2000	SINGLE ARM	NOT APPLICABLE	RIGID COLUMN	URBIS	AXIA 2 S1	PETITJEAN	SHEET STEEL	10	GALVANISED	THAMES
46105050	ERMINE STREET	Redbourne Parish	496125.9	399247.06	5	7004	00206310	01/04/1995 00:00	1	1	GREATER THAN 50MPH	VERGE	1500	SINGLE ARM	DARK GREY	RIGID COLUMN	URBIS	AXIA 2 S1	PETITJEAN	SHEET STEEL	10	PAINTED	THAMES
46105050	ERMINE STREET	Redbourne Parish	496140.84	399236.08	6	7005	00206311	01/04/1995 00:00	1	1	GREATER THAN 50MPH	VERGE	2000	SINGLE ARM	NOT APPLICABLE	RIGID COLUMN	URBIS	AXIA 2 S1	PETITJEAN	SHEET STEEL	10	GALVANISED	THAMES
46105050	ERMINE STREET	Redbourne Parish	496146.11	399216.14	7	7006	00206312	01/04/1995 00:00	1	1	GREATER THAN 50MPH	VERGE	2000	SINGLE ARM	NOT APPLICABLE	RIGID COLUMN	URBIS	AXIA 2 S1	PETITJEAN	SHEET STEEL	10	GALVANISED	THAMES
46105050	ERMINE STREET	Redbourne Parish	496129.92	399187.26	8	7007	00206313	01/04/1998 00:00	1	1	GREATER THAN 50MPH	VERGE	2000	SINGLE ARM	NOT APPLICABLE	RIGID COLUMN	URBIS	AXIA 2 S1	PETITJEAN	SHEET STEEL	10	GALVANISED	THAMES
46105050	ERMINE STREET	Redbourne Parish	496147.54	399173.11	9	7008	00206314	01/04/1995 00:00	1	1	GREATER THAN 50MPH	VERGE	2000	SINGLE ARM	NOT APPLICABLE	RIGID COLUMN	URBIS	AXIA 2 S1	PETITJEAN	SHEET STEEL	10	GALVANISED	THAMES
46105054	THEALBY LANE	Burton upon Stather Parish	489511.65	418039.52	1	7000	00205475	01/04/1989 00:00	2	4	LESS THAN 30MPH	BACK OF FOOTPATH	800	SINGLE ARM	NOT APPLICABLE	RIGID COLUMN	URBIS	AXIA 2 S1	PETITJEAN	SHEET STEEL	6	GALVANISED	DAER
46105054	THEALBY LANE	Burton upon Stather Parish	490102.46	418671.11	1	7015	00205490	01/04/1989 00:00	2	4	LESS THAN 30MPH	VERGE	800	SINGLE ARM	NOT APPLICABLE	RIGID COLUMN	URBIS	AXIA 2 S1	PETITJEAN	SHEET STEEL	6	GALVANISED	DAER
46105054	THEALBY LANE	Burton upon Stather Parish	490048.36	418605.89	10FP	7009	00205484	01/04/1989 00:00	2	4	LESS THAN 30MPH	VERGE	800	SINGLE ARM	NOT APPLICABLE	RIGID COLUMN	URBIS	AXIA 2 S1	PETITJEAN	SHEET STEEL	6	GALVANISED	DAER
46105054	THEALBY LANE	Burton upon Stather Parish	490070.08	418628.91	11	7010	00205485	01/04/1989 00:00	2	4	LESS THAN 30MPH	VERGE	800	SINGLE ARM	NOT APPLICABLE	RIGID COLUMN	URBIS	AXIA 2 S1	PETITJEAN	SHEET STEEL	6	GALVANISED	DAER
46105054	THEALBY LANE	Burton upon Stather Parish	490095	418654.8	12	7011	00205486	01/04/1989 00:00	2	4	LESS THAN 30MPH	VERGE	800	SINGLE ARM	NOT APPLICABLE	RIGID COLUMN	URBIS	AXIA 2 S1	PETITJEAN	SHEET STEEL	6	GALVANISED	DAER
46105054	THEALBY LANE	Burton upon Stather Parish	490111.65	418660.56	13	7012	00205487	01/04/1989 00:00	2	4	LESS THAN 30MPH	ON POLE	300	SINGLE ARM	NOT APPLICABLE	POLE MOUNTED	URBIS	AXIA 2 S1	WOODEN PO	WOOD	5	NOT APPLICABI	Not Applicable
46105054	THEALBY LANE	Burton upon Stather Parish	490126.57	418679.36	14	7013	00205488	01/04/2010 00:00	2	4	LESS THAN 30MPH	VERGE	500	SINGLE ARM	NOT APPLICABLE	RIGID COLUMN	URBIS	AXIA 2 S1	MALLATITE	TUBULAR STEEL	6	GALVANISED	TUBULAR
46105054	THEALBY LANE	Burton upon Stather Parish	490157.77	418685.97	15	7014	00205489	01/04/2010 00:00	2	4	LESS THAN 30MPH	VERGE	0	POST TOP	NOT APPLICABLE	RIGID COLUMN	URBIS	AXIA 2 S1	MALLATITE	TUBULAR STEEL	6	GALVANISED	TUBULAR
46105054	THEALBY LANE	Burton upon Stather Parish	489528.16	418070.83	2	7001	00205476	01/05/2021 00:00	2	4	LESS THAN 30MPH	VERGE	0	POST TOP	NOT APPLICABLE	RIGID COLUMN	URBIS	AXIA 2 S1	MALLATITE	TUBULAR STEEL	6	GALVANISED	TUBULAR
46105054	THEALBY LANE	Burton upon Stather Parish	489886.26	418428.46	3	7002	00205477	01/04/1989 00:00	2	4	LESS THAN 30MPH	VERGE	800	SINGLE ARM	NOT APPLICABLE	RIGID COLUMN	URBIS	AXIA 2 S1	PETITJEAN	SHEET STEEL	6	GALVANISED	DAER
46105054	THEALBY LANE	Burton upon Stather Parish	489906.24	418449.49	4	7003	00205478	01/04/1989 00:00	2	4	LESS THAN 30MPH	VERGE	800	SINGLE ARM	NOT APPLICABLE	RIGID COLUMN	URBIS	AXIA 2 S1	PETITJEAN	SHEET STEEL	6	GALVANISED	DAER
46105054	THEALBY LANE	Burton upon Stather Parish	489929.58	418472.26	5	7004	00205479	01/04/1989 00:00	2	4	LESS THAN 30MPH	VERGE	800	SINGLE ARM	NOT APPLICABLE	RIGID COLUMN	URBIS	AXIA 2 S1	PETITJEAN	SHEET STEEL	6	GALVANISED	DAER
46105054	THEALBY LANE	Burton upon Stather Parish	489963.74	418505.85	6	7005	00205480	01/04/1989 00:00	2	4	LESS THAN 30MPH	VERGE	800	SINGLE ARM	NOT APPLICABLE	RIGID COLUMN	URBIS	AXIA 2 S1	PETITJEAN	SHEET STEEL	6	GALVANISED	DAER
46105054	THEALBY LANE	Burton upon Stather Parish	489986.89	418529.03	7	7006	00205481	01/04/1989 00:00	2	4	LESS THAN 30MPH	VERGE	800	SINGLE ARM	NOT APPLICABLE	RIGID COLUMN	URBIS	AXIA 2 S1	PETITJEAN	SHEET STEEL	6	GALVANISED	DAER
46105054	THEALBY LANE	Burton upon Stather Parish	490015.91	418559.2	8	7007	00205482	01/04/1989 00:00	2	4	LESS THAN 30MPH	VERGE	800	SINGLE ARM	NOT APPLICABLE	RIGID COLUMN	URBIS	AXIA 2 S1	PETITJEAN	SHEET STEEL	6	GALVANISED	DAER
46105054	THEALBY LANE	Burton upon Stather Parish	490037.54	418580.27	9FP	7008	00205483	01/04/1989 00:00	2	4	LESS THAN 30MPH	VERGE	800	SINGLE ARM	NOT APPLICABLE	RIGID COLUMN	URBIS	AXIA 2 S1	PETITJEAN	SHEET STEEL	6	GALVANISED	DAER
46105056	NORMANBY ROAD	Scunthorpe	489559.83	411732.71	1	7001	00205492	01/04/2001 00:00	4	4	LESS THAN 30MPH	BACK OF FOOTPATH	800	SINGLE ARM	NOT APPLICABLE	RIGID COLUMN	URBIS	AXIA 2 S1	PETITJEAN	SHEET STEEL	8	GALVANISED	THAMES
46105056	NORMANBY ROAD	Scunthorpe	489433.64	411928.57	10	7018	00205509	01/04/1990 00:00	4	4	LESS THAN 30MPH	BACK OF FOOTPATH	800	SINGLE ARM	NOT APPLICABLE	RIGID COLUMN	URBIS	AXIA 2 S1	PETITJEAN	SHEET STEEL	8	GALVANISED	THAMES
46105056	NORMANBY ROAD	Scunthorpe	488878.64	414186.05	100	7108	00205599	01/04/2010 00:00	4	4	BETWEEN 30-50 MPH	BACK OF FOOTPATH	1000	SINGLE ARM	NOT APPLICABLE	RIGID COLUMN	URBIS	AXIA 2 S1	VALMONT ST	SHEET STEEL	8	GALVANISED	THAMES
46105056	NORMANBY ROAD	Scunthorpe	488873.26	414208.09	101	7109	00205600	01/04/1997 00:00	4	4	BETWEEN 30-50 MPH	VERGE	800	SINGLE ARM	NOT APPLICABLE	RIGID COLUMN	URBIS	AXIA 2 S1	PETITJEAN	SHEET STEEL	10	GALVANISED	THAMES
46105056	NORMANBY ROAD	Scunthorpe	488890.3	414238.6	102	7110	00205601	01/04/1997 00:00	4	4	BETWEEN 30-50 MPH	VERGE	800	SINGLE ARM	NOT APPLICABLE	RIGID COLUMN	URBIS	AXIA 2 S1	PETITJEAN	SHEET STEEL	10	GALVANISED	THAMES
46105056	NORMANBY ROAD	Scunthorpe	488866.5	414234.7	103FP	7111	00205602	01/04/1997 00:00	4	4	BETWEEN 30-50 MPH

46105069	REDBOURNE MERE	Kirton in Lindsey Parish	493919.21	398777.33	2	7001	00205655	01/04/1973 00:00	1	3	LESS THAN 30MPH	BACK OF FOOTPATH	800	SINGLE ARM	NOT APPLICABLE	RIGID COLUMN	URBIS	AXIA 2 S1	THORN	ALUMINIUM	8	ALUMINIUM	QC8	
46105069	REDBOURNE MERE	Kirton in Lindsey Parish	493950.7	398780.38	3	7002	00205656	01/04/1973 00:00	1	3	LESS THAN 30MPH	BACK OF FOOTPATH	800	SINGLE ARM	NOT APPLICABLE	RIGID COLUMN	URBIS	AXIA 2 S1	THORN	ALUMINIUM	8	ALUMINIUM	QC8	
46105069	REDBOURNE MERE	Kirton in Lindsey Parish	493989.62	398785.01	4	7003	00205657	01/04/1973 00:00	1	3	LESS THAN 30MPH	BACK OF FOOTPATH	1000	SINGLE ARM	NOT APPLICABLE	RIGID COLUMN	URBIS	AXIA 2 S1	PETITJEAN	SHEET STEEL	8	GALVANISED	THAMES	
46105069	REDBOURNE MERE	Kirton in Lindsey Parish	494026.04	398789.54	5	7004	00205658	01/04/1973 00:00	1	3	LESS THAN 30MPH	BACK OF FOOTPATH	800	SINGLE ARM	NOT APPLICABLE	RIGID COLUMN	URBIS	AXIA 2 S1	THORN	ALUMINIUM	8	ALUMINIUM	QC8	
46105069	REDBOURNE MERE	Kirton in Lindsey Parish	494057.44	398793.52	6	7005	00205659	01/04/1973 00:00	1	3	LESS THAN 30MPH	BACK OF FOOTPATH	800	SINGLE ARM	NOT APPLICABLE	RIGID COLUMN	URBIS	AXIA 2 S1	THORN	ALUMINIUM	8	ALUMINIUM	QC8	
46105069	REDBOURNE MERE	Kirton in Lindsey Parish	494102.14	398798.13	7	7006	00205660	01/04/1973 00:00	1	3	LESS THAN 30MPH	BACK OF FOOTPATH	1000	SINGLE ARM	NOT APPLICABLE	RIGID COLUMN	URBIS	AXIA 2 S1	PETITJEAN	SHEET STEEL	8	GALVANISED	THAMES	
46105069	REDBOURNE MERE	Kirton in Lindsey Parish	494140.3	398802.53	8	7007	00205661	01/04/1973 00:00	1	3	LESS THAN 30MPH	BACK OF FOOTPATH	800	SINGLE ARM	NOT APPLICABLE	RIGID COLUMN	URBIS	AXIA 2 S1	THORN	ALUMINIUM	8	ALUMINIUM	QC8	
46105069	REDBOURNE MERE	Kirton in Lindsey Parish	494169.05	398805.18	9	7008	00205662	01/04/1973 00:00	1	3	LESS THAN 30MPH	VERGE	800	SINGLE ARM	NOT APPLICABLE	RIGID COLUMN	URBIS	AXIA 2 S1	THORN	ALUMINIUM	8	ALUMINIUM	QC8	
46105071	WOOTTON ROAD	Ulceby Parish	510018.18	414675.2	1	7000	00205666	01/04/1980 00:00	3	1	LESS THAN 30MPH	VERGE	1250	SINGLE ARM	LIGHT GREY	RIGID COLUMN	URBIS	AXIA 2 S1	PETITJEAN	SHEET STEEL	10	PAINTED	THAMES	
46105071	WOOTTON ROAD	Ulceby Parish	510008.73	414712.68	2	7001	00205667	01/04/1980 00:00	3	1	LESS THAN 30MPH	VERGE	1250	SINGLE ARM	LIGHT GREY	RIGID COLUMN	URBIS	AXIA 2 S1	PETITJEAN	SHEET STEEL	10	PAINTED	THAMES	
46105071	WOOTTON ROAD	Ulceby Parish	509998.35	414745.39	3	7002	00205668	01/04/1980 00:00	3	1	LESS THAN 30MPH	VERGE	1250	SINGLE ARM	LIGHT GREY	RIGID COLUMN	URBIS	AXIA 2 S1	PETITJEAN	SHEET STEEL	10	PAINTED	THAMES	
46105071	WOOTTON ROAD	Ulceby Parish	509986	414783.92	4	7003	00205669	01/04/1980 00:00	3	1	GREATER THAN 50MPH	VERGE	1250	SINGLE ARM	LIGHT GREY	RIGID COLUMN	URBIS	AXIA 2 S1	PETITJEAN	SHEET STEEL	10	PAINTED	THAMES	
46105073	THORNTON ROAD	Goxhill Parish	509732.25	421262.66	1	7000	00205670	01/04/1978 00:00	4	4	LESS THAN 30MPH	VERGE	500	SINGLE ARM	NOT APPLICABLE	POLE MOUNTED	URBIS	AXIA 2 S1	WOODEN PO	WOOD	6	NOT APPLICABI	Not Applicable	
46105073	THORNTON ROAD	Goxhill Parish	509693.72	420870.2	10	7009	00205679	01/04/1978 00:00	4	4	LESS THAN 30MPH	VERGE	500	SINGLE ARM	NOT APPLICABLE	POLE MOUNTED	URBIS	AXIA 2 S1	WOODEN PO	WOOD	6	NOT APPLICABI	Not Applicable	
46105073	THORNTON ROAD	Goxhill Parish	509684.39	420843.29	11	7010	00205680	01/04/1978 00:00	4	4	LESS THAN 30MPH	VERGE	800	SINGLE ARM	MID GREY	RIGID COLUMN	URBIS	AXIA 2 S1	PETITJEAN	SHEET STEEL	6	PAINTED	DAER	
46105073	THORNTON ROAD	Goxhill Parish	509679.17	420810.82	12	7011	00205681	01/04/1978 00:00	4	4	LESS THAN 30MPH	VERGE	800	SINGLE ARM	MID GREY	RIGID COLUMN	URBIS	AXIA 2 S1	PETITJEAN	SHEET STEEL	6	PAINTED	DAER	
46105073	THORNTON ROAD	Goxhill Parish	509674.31	420778.13	13	7012	00205682	01/04/1978 00:00	4	4	LESS THAN 30MPH	VERGE	800	SINGLE ARM	MID GREY	RIGID COLUMN	URBIS	AXIA 2 S1	PETITJEAN	SHEET STEEL	6	PAINTED	DAER	
46105073	THORNTON ROAD	Goxhill Parish	509748.77	421246.89	2	7001	00205671	01/04/1980 00:00	4	4	LESS THAN 30MPH	VERGE	300	SINGLE ARM	NOT APPLICABLE	POLE MOUNTED	URBIS	AXIA 2 S1	WOODEN PO	WOOD	6	NOT APPLICABI	Not Applicable	
46105073	THORNTON ROAD	Goxhill Parish	509738.8	421185.07	3	7002	00205672	01/04/1980 00:00	4	4	LESS THAN 30MPH	VERGE	300	SINGLE ARM	NOT APPLICABLE	POLE MOUNTED	URBIS	AXIA 2 S1	WOODEN PO	WOOD	6	NOT APPLICABI	Not Applicable	
46105073	THORNTON ROAD	Goxhill Parish	509730.75	421129.27	4	7003	00205673	01/04/1978 00:00	4	4	LESS THAN 30MPH	VERGE	500	SINGLE ARM	NOT APPLICABLE	POLE MOUNTED	URBIS	AXIA 2 S1	WOODEN PO	WOOD	6	NOT APPLICABI	Not Applicable	
46105073	THORNTON ROAD	Goxhill Parish	509724.62	421088.34	5	7004	00205674	01/04/1978 00:00	4	4	LESS THAN 30MPH	VERGE	500	SINGLE ARM	NOT APPLICABLE	POLE MOUNTED	URBIS	AXIA 2 S1	WOODEN PO	WOOD	6	NOT APPLICABI	Not Applicable	
46105073	THORNTON ROAD	Goxhill Parish	509717.31	421043.74	6	7005	00205675	01/04/1978 00:00	4	4	LESS THAN 30MPH	VERGE	500	SINGLE ARM	NOT APPLICABLE	POLE MOUNTED	URBIS	AXIA 2 S1	WOODEN PO	WOOD	6	NOT APPLICABI	Not Applicable	
46105073	THORNTON ROAD	Goxhill Parish	509711.31	421001.28	7	7006	00205676	01/04/1980 00:00	4	4	LESS THAN 30MPH	VERGE	300	SINGLE ARM	NOT APPLICABLE	POLE MOUNTED	URBIS	AXIA 2 S1	WOODEN PO	WOOD	6	NOT APPLICABI	Not Applicable	
46105073	THORNTON ROAD	Goxhill Parish	509704.49	420954.36	8	7007	00205677	01/04/1980 00:00	4	4	LESS THAN 30MPH	VERGE	300	SINGLE ARM	NOT APPLICABLE	POLE MOUNTED	URBIS	AXIA 2 S1	WOODEN PO	WOOD	6	NOT APPLICABI	Not Applicable	
46105073	THORNTON ROAD	Goxhill Parish	509698.04	420908.1	9	7008	00205678	01/04/1980 00:00	4	4	LESS THAN 30MPH	VERGE	300	SINGLE ARM	NOT APPLICABLE	POLE MOUNTED	URBIS	AXIA 2 S1	WOODEN PO	WOOD	6	NOT APPLICABI	Not Applicable	
46105075	EDGBASTON AVENUE	Bottesford Parish	488155.28	407091.06	1	7000	00205683	01/04/2001 00:00	3	1	LESS THAN 30MPH	BACK OF FOOTPATH	0	POST TOP	NOT APPLICABLE	RIGID COLUMN	URBIS	AXIA 2 S1	PETITJEAN	TUBULAR STEEL	5	GALVANISED	METRO	
46105075	EDGBASTON AVENUE	Bottesford Parish	488124.05	407081.04	2	7001	00205684	01/04/2001 00:00	3	1	LESS THAN 30MPH	BACK OF FOOTPATH	0	POST TOP	NOT APPLICABLE	RIGID COLUMN	URBIS	AXIA 2 S1	PETITJEAN	TUBULAR STEEL	5	GALVANISED	METRO	
46105076	CHESTNUT WAY	Goxhill Parish	509998.13	421932.24	1	7000	00205685	01/04/1995 00:00	4	4	LESS THAN 30MPH	BACK OF FOOTPATH	0	POST TOP	NOT APPLICABLE	RIGID COLUMN	URBIS	AXIA 2 S1	PETITJEAN	SHEET STEEL	5	GALVANISED	NIDD	
46105076	CHESTNUT WAY	Goxhill Parish	510027.85	421918.18	2	7001	00205686	01/04/1995 00:00	4	4	LESS THAN 30MPH	BACK OF FOOTPATH	0	POST TOP	NOT APPLICABLE	RIGID COLUMN	URBIS	AXIA 2 S1	PETITJEAN	SHEET STEEL	5	GALVANISED	NIDD	
46105076	CHESTNUT WAY	Goxhill Parish	510060.34	421909.94	3	7002	00205687	01/04/1995 00:00	4	4	LESS THAN 30MPH	BACK OF FOOTPATH	0	POST TOP	NOT APPLICABLE	RIGID COLUMN	URBIS	AXIA 2 S1	PETITJEAN	SHEET STEEL	5	GALVANISED	NIDD	
46105076	CHESTNUT WAY	Goxhill Parish	510093.8	421919.93	4	7003	00205688	01/04/1995 00:00	4	4	LESS THAN 30MPH	BACK OF FOOTPATH	0	POST TOP	NOT APPLICABLE	RIGID COLUMN	URBIS	AXIA 2 S1	PETITJEAN	SHEET STEEL	5	GALVANISED	NIDD	
46105076	CHESTNUT WAY	Goxhill Parish	510121.61	421909.23	5	7004	00205689	01/04/1995 00:00	4	4	LESS THAN 30MPH	BACK OF FOOTPATH	0	POST TOP	NOT APPLICABLE	RIGID COLUMN	URBIS	AXIA 2 S1	PETITJEAN	SHEET STEEL	5	GALVANISED	NIDD	
46105076	CHESTNUT WAY	Goxhill Parish	510137.93	421883.88	6	7005	00205690	01/04/1995 00:00	4	4	LESS THAN 30MPH	BACK OF FOOTPATH	0	POST TOP	NOT APPLICABLE	RIGID COLUMN	URBIS	AXIA 2 S1	PETITJEAN	SHEET STEEL	5	GALVANISED	NIDD	
46105077	WEEPING ELM WAY	Scunthorpe	490657.56	407649.15	1	7000	00205691	01/04/2001 00:00	1	3	LESS THAN 30MPH	BACK OF FOOTPATH	0	POST TOP	NOT APPLICABLE	RIGID COLUMN	URBIS	AXIA 2 S1	MALLATITE	TUBULAR STEEL	6	GALVANISED	STEPPED TUBULAR	
46105077	WEEPING ELM WAY	Scunthorpe	490646.31	407675.3	2	7001	00205692	01/04/2001 00:00	1	3	LESS THAN 30MPH	BACK OF FOOTPATH	0	POST TOP	NOT APPLICABLE	RIGID COLUMN	URBIS	AXIA 2 S1	MALLATITE	TUBULAR STEEL	6	GALVANISED	STEPPED TUBULAR	
46105077	WEEPING ELM WAY	Scunthorpe	490642.32	407708.06	3	7002	00205693	01/04/2001 00:00	1	3	LESS THAN 30MPH	BACK OF FOOTPATH	0	POST TOP	NOT APPLICABLE	RIGID COLUMN	URBIS	AXIA 2 S1	MALLATITE	TUBULAR STEEL	6	GALVANISED	STEPPED TUBULAR	
46105078	TILIA CLOSE	Scunthorpe	490606.43	407726.55	1	7000	00205694	01/04/2001 00:00	1	3	LESS THAN 30MPH	BACK OF FOOTPATH	0	POST TOP	NOT APPLICABLE	RIGID COLUMN	URBIS	AXIA 2 S1	MALLATITE	TUBULAR STEEL	6	GALVANISED	STEPPED TUBULAR	
46105078	TILIA CLOSE	Scunthorpe	490602.78	407756.68	2	7001	00205695	01/04/2001 00:00	1	3	LESS THAN 30MPH	VERGE	0	POST TOP	NOT APPLICABLE	RIGID COLUMN	URBIS	AXIA 2 S1	MALLATITE	TUBULAR STEEL	6	GALVANISED	STEPPED TUBULAR	
46105078	TILIA CLOSE	Scunthorpe	490593.14	407773.73	3	7002	00205696	01/04/2001 00:00	1	3	LESS THAN 30MPH	VERGE	0	POST TOP	NOT APPLICABLE	RIGID COLUMN	URBIS	AXIA 2 S1	MALLATITE	TUBULAR STEEL	6	GALVANISED	STEPPED TUBULAR	
46105079	IVY HOUSE COURT	Scunthorpe	490572.97	407691.87	1	7000	00205697	01/04/2001 00:00	1	3	LESS THAN 30MPH	BACK OF FOOTPATH	0	POST TOP	NOT APPLICABLE	RIGID COLUMN	URBIS	AXIA 2 S1	MALLATITE	TUBULAR STEEL	6	GALVANISED	STEPPED TUBULAR	
46105079	IVY HOUSE COURT	Scunthorpe	490558.87	407718.64	2	7001	00205698	01/04/2001 00:00	1	3	LESS THAN 30MPH	VERGE	0	POST TOP	NOT APPLICABLE	RIGID COLUMN	URBIS	AXIA 2 S1	MALLATITE	TUBULAR STEEL	6	GALVANISED	STEPPED TUBULAR	
46105079	IVY HOUSE COURT	Scunthorpe	490536.8	407736.48	3	7002	00205699	01/04/2001 00:00	1	3	LESS THAN 30MPH	VERGE	0	POST TOP	NOT APPLICABLE	RIGID COLUMN	URBIS	AXIA 2 S1	MALLATITE	TUBULAR STEEL	6	GALVANISED	STEPPED TUBULAR	
46105079	IVY HOUSE COURT	Scunthorpe	490528.73	407756.13	4	7003	00205700	01/04/2001 00:00	1	3	LESS THAN 30MPH	VERGE	0	POST TOP	NOT APPLICABLE	RIGID COLUMN	URBIS	AXIA 2 S1	MALLATITE	TUBULAR STEEL	6	GALVANISED	STEPPED TUBULAR	
46105080	HAWTHORNE GARDENS	Goxhill Parish	510305.18	421593.47	1	7000	00205701	01/04/2001 00:00	4	4	LESS THAN 30MPH	BACK OF FOOTPATH	0	POST TOP	NOT APPLICABLE	RIGID COLUMN	URBIS	AXIA 2 S1	MALLATITE	TUBULAR STEEL	5	GALVANISED	STEPPED TUBULAR	
46105080	HAWTHORNE GARDENS	Goxhill Parish	510334.75	421596.43	2	7001	00205702	01/04/2001 00:00	4	4	LESS THAN 30MPH	BACK OF FOOTPATH	0	POST TOP	NOT APPLICABLE	RIGID COLUMN	URBIS	AXIA 2 S1	MALLATITE	TUBULAR STEEL	5	GALVANISED	STEPPED TUBULAR	
46105080	HAWTHORNE GARDENS	Goxhill Parish	510362.29	421602.6	3	7002	00205703	01/04/2001 00:00	4	4	LESS THAN 30MPH	BACK OF FOOTPATH	0	POST TOP	NOT APPLICABLE	RIGID COLUMN	URBIS	AXIA 2 S1	MALLATITE	TUBULAR STEEL	5	GALVANISED	STEPPED TUBULAR	
46105080	HAWTHORNE GARDENS	Goxhill Parish	510376.81	421617.38	4	7003	00205704	01/04/2001 00:00	4	4	LESS THAN 30MPH	BACK OF FOOTPATH	0	POST TOP	NOT APPLICABLE	RIGID COLUMN	URBIS	AXIA 2 S1	MALLATITE	TUBULAR STEEL	5	GALVANISED	STEPPED TUBULAR	
46105081	KINGS CROFT	Crowle Parish	478557.57	411568.86	1	7000	00205705	01/04/2001 00:00	5	1	LESS THAN 30MPH	VERGE	0	POST TOP	NOT APPLICABLE	RIGID COLUMN	URBIS	AXIA 2 S1	PETITJEAN	TUBULAR STEEL	5	GALVANISED	METRO	
46105081	KINGS CROFT	Crowle Parish	478531.27	411583.36	2	7001	00205706	01/04/2001 00:00	5	1	LESS THAN 30MPH	VERGE	0	POST TOP	NOT APPLICABLE	RIGID COLUMN	URBIS	AXIA 2 S1	PETITJEAN	TUBULAR STEEL	5	GALVANISED	METRO	
46105081	KINGS CROFT	Crowle Parish	478505.64	411585.92	3	7002	00205707	01/04/2001 00:00	5	1	LESS THAN 30MPH	VERGE	0	POST TOP	NOT APPLICABLE	RIGID COLUMN	URBIS	AXIA 2 S1	PETITJEAN	TUBULAR STEEL	5	GALVANISED	METRO	
46105081	KINGS CROFT	Crowle Parish	478484.53	411597.46	4	7003	00205708	01/04/2001 00:00	5	1	LESS THAN 30MPH	VERGE	0	POST TOP	NOT APPLICABLE	RIGID COLUMN	URBIS	AXIA 2 S1	PETITJEAN	TUBULAR STEEL	5	GALVANISED	METRO	
46105081	KINGS CROFT	Crowle Parish	478451.11	411588.43	5	7004	00205709	01/04/2001 00:00	5	1	LESS THAN 30MPH	VERGE	0	POST TOP	NOT APPLICABLE	RIGID COLUMN	URBIS	AXIA 2 S1	PETITJEAN	TUBULAR STEEL	5	GALVANISED	METRO	
46105081	KINGS CROFT	Crowle Parish	478433.37	411607.52	6	7005	00205710	01/04/2001 00:00	5	1	LESS THAN 30MPH	VERGE	0	POST TOP	NOT APPLICABLE	RIGID COLUMN	URBIS	AXIA 2 S1	PETITJEAN	TUBULAR STEEL	5	GALVANISED	METRO	
46105081	KINGS CROFT	Crowle Parish	478410.22	411601.2	7	7006	00205711	01/04/2001 00:00	5	1	LESS THAN 30MPH	VERGE	0	POST TOP	NOT APPLICABLE	RIGID COLUMN	URBIS	AXIA 2 S1	PETITJEAN	TUBULAR STEEL	5	GALVANISED	METRO	
46105081	KINGS CROFT	Crowle Parish	478413.98	411617.33	8	7007	00205712	01/04/2001 00:00	5	1	LESS THAN 30MPH	VERGE	0	POST TOP	NOT APPLICABLE	RIGID COLUMN	URBIS	AXIA 2 S1	PETITJEAN	TUBULAR STEEL	5	GALVANISED	METRO	
46105082	MILLERS BROOK	Belton Parish	478435.9	406464.9	1	7000	00205713	01/04/1996 00:00	5	3	LESS THAN 30MPH	BACK OF FOOTPATH	0	POST TOP	NOT APPLICABLE	RIGID COLUMN	URBIS	AXIA 2 S1	PETITJEAN	SHEET STEEL	6	GALVANISED	DAER	
46105082	MILLERS BROOK	Belton Parish	478474.2	406454.8	2	7001	00205714	01/04/1996 00:00	5	3	LESS THAN 30MPH	BACK OF FOOTPATH	0	POST TOP	NOT APPLICABLE	RIGID COLUMN	URBIS	AXIA 2 S1	PETITJEAN	SHEET STEEL	6	GALVANISED	DAER	
46105082	MILLERS BROOK	Belton Parish	478509.3	406442.4	3	7002	00205715	01/04/1996 00:00	5	3	LESS THAN 30MPH	BACK OF FOOTPATH	0	POST TOP	NOT APPLICABLE	RIGID COLUMN	URBIS	AXIA 2 S1	PETITJEAN	SHEET STEEL	6	GALVANISED	DAER	
46105082	MILLERS BROOK	Belton Parish	478540.9	406446.1	4	7003	00205716	01/04/1996 00:00	5	3	LESS THAN 30MPH	BACK OF FOOTPATH	0	POST TOP	NOT APPLICABLE	RIGID COLUMN	URBIS	AXIA 2 S1	PETITJEAN	SHEET STEEL	6	GALVANISED	DAER	
46105082	MILLERS BROOK	Belton Parish	478557.7	406437.9	5	7004	00205717	01/04/1996 00:00	5	3	LESS THAN 30MPH	BACK OF FOOTPATH	0	POST TOP	NOT APPLICABLE	RIGID COLUMN	URBIS	AXIA 2 S1	PETITJEAN	SHEET STEEL	6	GALVANISED	DAER	
46105082	MILLERS BROOK	Belton Parish	478584.9	406437.9	6	7005	00205718	01/04/1996 00:00	5	3	LESS THAN 30MPH	BACK OF FOOTPATH	0	POST TOP	NOT APPLICABLE	RIGID COLUMN	URBIS	AXIA 2 S1	PETITJEAN	SHEET STEEL	6	GALVANISED	DAER	
46105084	ORCHARD CLOSE	Burringham Parish	483846.83	409482.88	1	7000	00205719	01/04/1995 00:00	2	1	LESS THAN 30MPH	BACK OF FOOTPATH	0	POST TOP	NOT APPLICABLE	RIGID COLUMN	URBIS	AXIA 2 S1	PETITJEAN	SHEET STEEL	5	GALVANISED	NIDD	
46105084	ORCHARD CLOSE	Burringham Parish	483830.43	409500.36	2	7001	00205720	01/04/1995 00:00	2	1	LESS THAN 30MPH	VERGE	0	POST TOP	NOT APPLICABLE	RIGID COLUMN	URBIS	AXIA 2 S1	PETITJEAN	SHEET STEEL	5	GALVANISED	NIDD	
46105084	ORCHARD CLOSE	Burringham Parish	483818.6	409514.87	3	7002	00205721	01/04/1995 00:00	2	1	LESS THAN 30MPH	BACK OF FOOTPATH	0	POST TOP	NOT APPLICABLE	RIGID COLUMN	URBIS	AXIA 2 S1	PETITJEAN	SHEET STEEL	5	GALVANISED	NIDD	
46105085	MILL LANE	South Ferriby Parish	498353.28	420966.5	1	7000	00205722	01/04/1995 00:00	6	3	LESS THAN 30MPH	VERGE	0	POST TOP	NOT APPLICABLE	RIGID COLUMN	URBIS	AXIA 2 S1	PETITJEAN	SHEET STEEL	5	GALVANISED	NIDD	
46105085	MILL LANE	South Ferriby Parish	498373.8	420961.55	2	7001	00205723	01/04/1995 00:00	6	3	LESS THAN 30MPH	VERGE	0	POST TOP	NOT APPLICABLE	RIGID COLUMN	URBIS	AXIA 2 S1	PETITJEAN	SHEET STEEL	5	GALVANISED	NIDD	
46105085	MILL LANE	South Ferriby Parish	498387.66	420968.03	3	7002	00205724	01/04/1995 00:00	6	3	LESS THAN 30MPH	VERGE	0	POST TOP	NOT APPLICABLE	RIGID COLUMN	URBIS	AXIA 2 S1	PETITJEAN	SHEET STEEL	5	GALVANISED	NIDD	
46105086	FEYZIN DRIVE	Barton upon Humber Parish	502241.65	421751.76	1	7000	00205725	01/04/1997 00:00	5	2	LESS THAN 30MPH	BACK OF FOOTPATH	0	POST TOP	NOT APPLICABLE	RIGID COLUMN	URBIS	AXIA 2 S1	PETITJEAN	TUBULAR STEEL	6	GALVANISED	STEPPED TUBULAR	
46105086	FEYZIN DRIVE	Barton upon Humber Parish	502246.7	421772.28	2	7001	00205726	01/04/1997 00:00	5	2	LESS THAN 30MPH	BACK OF FOOTPATH	0	POST TOP	NOT APPLICABLE	RIGID COLUMN	URBIS	AXIA 2 S1	PETITJEAN	TUBULAR STEEL	6	GALVANISED	STEPPED TUBULAR	
46105086	FEYZIN DRIVE	Barton upon Humber Parish	502242.52	421797.72	3	7002	00205727	01/04/1997 00:00	5	2	LESS THAN 30MPH	BACK OF FOOTPATH	0	POST TOP	NOT APPLICABLE	RIGID COLUMN	URBIS	AXIA 2 S1	PETITJEAN	TUBULAR STEEL	6	GALVANISED	STEPPED TUBULAR	
46105086	FEYZIN DRIVE	Barton upon Humber Parish	502225.73	421802.92	4	7003	00205728	01/04/1997 00:00	5	2	LESS THAN 30MPH	BACK OF FOOTPATH	0	POST TOP	NOT APPLICABLE	RIGID COLUMN	URBIS	AXIA 2 S1	PETITJEAN	TUBULAR STEEL	6	GALVANISED	STEPPED TUBULAR	
46105086	FEYZIN DRIVE	Barton upon Humber Parish	502192.16	421806.88	5	7004	00205729	01/04/1997 00:00	5	2	LESS THAN 30MPH	BACK OF FOOTPATH	0	POST TOP	NOT APPLICABLE	RIGID COLUMN	URBIS	AXIA 2 S1	PETITJEAN	TUBULAR STEEL	6	GALVANISED	STEPPED TUBULAR	
46105087	FURNISS COURT	Barton upon Humber Parish	502159.36	421770.73	1	7000	00205730	01/04/1997 00:00	5	2	LESS THAN 30MPH	VERGE	0	POST TOP	NOT APPLICABLE	RIGID COLUMN	URBIS	AXIA 2 S1	PETITJEAN	TUBULAR STEEL	6	GALVANISED	STEPPED TUBULAR	
46105087	FURNISS COURT	Barton upon Humber Parish	502141.88	421778.48	2	7001	00205731	01/04/1997 00:00	5	2	LESS THAN 30MPH	VERGE	0	POST TOP	NOT APPLICABLE	RIGID COLUMN	URBIS	AXIA 2 S1	PETITJEAN	TUBULAR STEEL	6	GALVANISED	STEPPED TUBULAR	
46105088	RIVERBANK RISE	Barton upon Humber Parish	502188.07	421732.74	1	7004	00205736	01/04/2001 00:00	5	2	LESS THAN 30MPH	VERGE	0	POST TOP	NOT APPLICABLE	RIGID COLUMN	URBIS	AXIA 2 S1	PETITJEAN	TUBULAR STEEL	6	GALVANISED	STEPPED TUBULAR	
46105088	RIVERBANK RISE	Barton upon Humber Parish	502119.06	421946.49	10	7013	00205745	01/04/2001 00:00	5	2	NOT ON A ROAD	BACK OF FOOTPATH	0	POST TOP	NOT APPLICABLE	BASE HINGED	URBIS	AXIA 2 S1	PETITJEAN	SHEET STEEL	5	GALVANISED	LEVEN	
46105088	RIVERBANK RISE	Barton upon Humber Parish	502138.42	421968.17	11	7014	00205746	01/04/2001 00:00	5	2	NOT ON A ROAD	BACK OF FOOTPATH	0	POST TOP	NOT APPLICABLE	BASE HINGED	URBIS	AXIA 2 S1	PETITJEAN	SHEET STEEL	5	GALVANISED	LEVEN	
46105088	RIVERBANK RISE	Barton upon Humber Parish	502153.74	421977.41	12	7015	00205747	01/04/2001 00:00	5	2	LESS THAN 30MPH	BACK OF FOOTPATH	0	POST TOP	NOT APPLICABLE	RIGID COLUMN	URBIS	AXIA 2 S1	PETITJEAN	TUBULAR STEEL	6	GALVANISED	STEPPED TUBULAR	
46105088	RIVERBANK RISE	Barton upon Humber Parish	502152.82	422004.55	13	7016	00205748	01/04/2001 00:00	5	2	LESS THAN 30MPH	BACK OF FOOTPATH	0	POST TOP	NOT APPLICABLE	RIGID COLUMN	URBIS	AXIA 2 S1	PETITJEAN	TUBULAR STEEL	6	GALVANISED	STEPPED TUBULAR	
46105088	RIVERBANK RISE	Barton upon Humber Parish	502164.2	422037.29	14	7017	00205749	01/04/2001 00:00	5	2	LESS THAN 30MPH	BACK OF FOOTPATH	0	POST TOP	NOT APPLICABLE	RIGID COLUMN	URBIS	AXIA 2 S1	PETITJEAN	TUBULAR STEEL	6	GALVANISED	STEPPED TUBULAR	
46105088	RIVERBANK RISE	Barton upon Humber Parish	502148.99	422053.35	15	7018	00205750	01/04/2001 00:00	5	2	LESS THAN 30MPH	BACK OF FOOTPATH	0	POST TOP	NOT APPLICABLE	RIGID COLUMN	URBIS	AXIA 2 S1	PETITJEAN	TUBULAR STEEL	6	GALVANISED	STEPPED TUBULAR	
46105088	RIVERBANK RISE	Barton upon Humber Parish	502115.36	422056.07	16	7019	00205751	01/04/2001 00:00	5	2	LESS THAN 30MPH	BACK OF FOOTPATH	0	POST TOP	NOT APPLICABLE	RIGID COLUMN	URBIS	AXIA 2 S1	PETITJEAN	TUBULAR STEEL	6	GALVANISED	STEPPED TUBULAR	
46105088	RIVERBANK RISE	Barton upon Humber Parish	502091.99	422037.06	17	7020	00205752	01/04/2001 00:00	5	2	LESS THAN 30MPH	BACK OF FOOTPATH	0	POST TOP	NOT APPLICABLE	RIGID COLUMN	URBIS	AXIA 2 S1	PETITJEAN	TUBULAR STEEL	6	GALVANISED	STEPPED TUBULAR	
46105088	RIVERBANK RISE	Barton upon Humber Parish	502086.99	422057.44	18	7021	00205753	01/04/2001 00:00	5	2	LESS THAN 30MPH	BACK OF FOOTPATH	0	POST TOP	NOT APPLICABLE	RIGID COLUMN	URBIS	AXIA 2 S1	PETITJEAN	TUBULAR STEEL	6	GALVANISED	STEPPED TUBULAR	
46105088	RIVERBANK RISE	Barton upon Humber Parish	502084.13	422079.52	19	7022	00205754	01/04/2001 00:00	5	2	LESS THAN 30MPH	BACK OF FOOTPATH	0	POST TOP	NOT APPLICABLE	RIGID COLUMN	URBIS	AXIA 2 S1	PETITJEAN	TUBULAR STEEL	6	GALVANISED	STEPPED TUBULAR	
46105088	RIVERBANK RISE	Barton upon Humber Parish	502178.59	421748.42	2	7005	00205737	01/04/2001 00:00	5	2	LESS THAN 30MPH	VERGE	0	POST TOP	NOT APPLICABLE	RIGID COLUMN	URBIS	AXIA 2 S1	PETITJEAN	TUBULAR STEEL	6	GALVANISED	STEPPED TUBULAR	
46105088	RIVERBANK RISE	Barton upon Humber Parish	502083.58	422105.1	20	7023	00

46105126	SCAWBY ROAD	Scawby Parish	499278.69	406966.41	3	7002	00205925	01/04/1983 00:00	2	2	LESS THAN 30MPH	BACK OF FOOTPATH	1500	SINGLE ARM	NOT APPLICABLE	RIGID COLUMN	URBIS	AXIA 2 S1	PETITJEAN	SHEET STEEL	10	GALVANISED	THAMES		
46105126	SCAWBY ROAD	Scawby Parish	498532.86	406693.96	30	7029	00205952	01/04/1983 00:00	2	2	BETWEEN 30-50 MPH	FRONT OF FOOTPATH	1250	SINGLE ARM	MID GREY	RIGID COLUMN	URBIS	AXIA 2 S1	PETITJEAN	SHEET STEEL	10	PAINTED	THAMES		
46105126	SCAWBY ROAD	Scawby Parish	498497.98	406678.54	31	7030	00205953	01/04/1983 00:00	2	2	BETWEEN 30-50 MPH	FRONT OF FOOTPATH	1250	SINGLE ARM	MID GREY	RIGID COLUMN	URBIS	AXIA 2 S1	PETITJEAN	SHEET STEEL	10	PAINTED	THAMES		
46105126	SCAWBY ROAD	Scawby Parish	498464.14	406664.23	32	7031	00205954	01/04/1983 00:00	2	2	BETWEEN 30-50 MPH	FRONT OF FOOTPATH	1250	SINGLE ARM	MID GREY	RIGID COLUMN	URBIS	AXIA 2 S1	PETITJEAN	SHEET STEEL	10	PAINTED	THAMES		
46105126	SCAWBY ROAD	Scawby Parish	498431.97	406649.11	33	7032	00205955	01/04/1983 00:00	2	2	BETWEEN 30-50 MPH	VERGE	1250	SINGLE ARM	MID GREY	RIGID COLUMN	URBIS	AXIA 2 S1	PETITJEAN	SHEET STEEL	10	PAINTED	THAMES		
46105126	SCAWBY ROAD	Scawby Parish	498396.98	406633.33	34	7033	00205956	01/04/1983 00:00	2	2	BETWEEN 30-50 MPH	VERGE	1250	SINGLE ARM	MID GREY	RIGID COLUMN	URBIS	AXIA 2 S1	PETITJEAN	SHEET STEEL	10	PAINTED	THAMES		
46105126	SCAWBY ROAD	Scawby Parish	498364.91	406617.36	35	7034	00205957	01/04/1983 00:00	2	2	BETWEEN 30-50 MPH	VERGE	1250	SINGLE ARM	MID GREY	RIGID COLUMN	URBIS	AXIA 2 S1	PETITJEAN	SHEET STEEL	10	PAINTED	THAMES		
46105126	SCAWBY ROAD	Scawby Parish	498334	406602.13	36	7035	00205958	01/04/1983 00:00	2	2	BETWEEN 30-50 MPH	VERGE	1250	SINGLE ARM	MID GREY	RIGID COLUMN	URBIS	AXIA 2 S1	PETITJEAN	SHEET STEEL	10	PAINTED	THAMES		
46105126	SCAWBY ROAD	Scawby Parish	498301.93	406586.82	37	7036	00205959	01/04/1983 00:00	2	2	BETWEEN 30-50 MPH	VERGE	1250	SINGLE ARM	MID GREY	RIGID COLUMN	URBIS	AXIA 2 S1	PETITJEAN	SHEET STEEL	10	PAINTED	THAMES		
46105126	SCAWBY ROAD	Scawby Parish	498267.01	406570.13	38FP	7037	00205960	01/04/1983 00:00	2	2	BETWEEN 30-50 MPH	VERGE	1250	SINGLE ARM	MID GREY	RIGID COLUMN	URBIS	AXIA 2 S1	PETITJEAN	SHEET STEEL	10	PAINTED	THAMES		
46105126	SCAWBY ROAD	Scawby Parish	498238.54	406553.86	39	7038	00205961	01/04/1983 00:00	2	2	BETWEEN 30-50 MPH	VERGE	1250	SINGLE ARM	MID GREY	RIGID COLUMN	URBIS	AXIA 2 S1	PETITJEAN	SHEET STEEL	10	PAINTED	THAMES		
46105126	SCAWBY ROAD	Scawby Parish	499239.81	406957.84	4	7003	00205926	25/06/2018 00:00	2	2	BETWEEN 30-50 MPH	FRONT OF FOOTPATH	0	POST TOP	NOT APPLICABLE	RIGID COLUMN	URBIS	AXIA 2 S1	VALMONT ST	TUBULAR STEEL	10	GALVANISED	TUBULAR		
46105126	SCAWBY ROAD	Scawby Parish	498207.6	406535.25	40	7039	00205962	01/04/1983 00:00	2	2	BETWEEN 30-50 MPH	BACK OF FOOTPATH	1250	SINGLE ARM	MID GREY	RIGID COLUMN	URBIS	AXIA 2 S1	PETITJEAN	SHEET STEEL	10	PAINTED	THAMES		
46105126	SCAWBY ROAD	Scawby Parish	498180.82	406519.66	41	7040	00205963	01/04/1983 00:00	2	2	BETWEEN 30-50 MPH	BACK OF FOOTPATH	1250	SINGLE ARM	MID GREY	RIGID COLUMN	URBIS	AXIA 2 S1	PETITJEAN	SHEET STEEL	10	PAINTED	THAMES		
46105126	SCAWBY ROAD	Scawby Parish	498157.44	406504.41	42	7041	00205964	01/04/1983 00:00	2	2	BETWEEN 30-50 MPH	VERGE	1250	SINGLE ARM	MID GREY	RIGID COLUMN	URBIS	AXIA 2 S1	PETITJEAN	SHEET STEEL	10	PAINTED	THAMES		
46105126	SCAWBY ROAD	Scawby Parish	498126.42	406472.31	43	7042	00205965	01/04/1983 00:00	2	2	BETWEEN 30-50 MPH	BACK OF FOOTPATH	1250	SINGLE ARM	MID GREY	RIGID COLUMN	URBIS	AXIA 2 S1	PETITJEAN	SHEET STEEL	10	PAINTED	THAMES		
46105126	SCAWBY ROAD	Scawby Parish	498116.51	406446.73	44	7043	00205966	01/04/1983 00:00	2	2	BETWEEN 30-50 MPH	BACK OF FOOTPATH	1250	SINGLE ARM	MID GREY	RIGID COLUMN	URBIS	AXIA 2 S1	PETITJEAN	SHEET STEEL	10	PAINTED	THAMES		
46105126	SCAWBY ROAD	Scawby Parish	498111.53	406412.94	45	7044	00205967	01/04/1983 00:00	2	2	BETWEEN 30-50 MPH	BACK OF FOOTPATH	1250	SINGLE ARM	NOT APPLICABLE	RIGID COLUMN	URBIS	AXIA 2 S1	PETITJEAN	SHEET STEEL	10	GALVANISED	THAMES		
46105126	SCAWBY ROAD	Scawby Parish	498103.93	406366.43	46	7045	00205968	01/04/1983 00:00	2	2	GREATER THAN 50MPH	BACK OF FOOTPATH	1250	SINGLE ARM	MID GREY	RIGID COLUMN	URBIS	AXIA 2 S1	PETITJEAN	SHEET STEEL	10	PAINTED	THAMES		
46105126	SCAWBY ROAD	Scawby Parish	498098.58	406326.62	47	7046	00205969	01/04/1983 00:00	2	2	GREATER THAN 50MPH	BACK OF FOOTPATH	1250	SINGLE ARM	MID GREY	RIGID COLUMN	URBIS	AXIA 2 S1	PETITJEAN	SHEET STEEL	10	PAINTED	THAMES		
46105126	SCAWBY ROAD	Scawby Parish	499203.45	406963.44	5	7004	00205927	26/02/2018 00:00	2	2	LESS THAN 30MPH	BACK OF FOOTPATH	1000	SINGLE ARM	NOT APPLICABLE	RIGID COLUMN	URBIS	AXIA 2 S1	VALMONT ST	SHEET STEEL	10	GALVANISED	THAMES		
46105126	SCAWBY ROAD	Scawby Parish	499169.38	406938.87	6	7005	00205928	26/02/2021 00:00	2	2	LESS THAN 30MPH	VERGE	1000	SINGLE ARM	NOT APPLICABLE	RIGID COLUMN	URBIS	AXIA 2 S1	MALLATITE	TUBULAR STEEL	10	GALVANISED	TUBULAR		
46105126	SCAWBY ROAD	Scawby Parish	499139.44	406929.27	7	7006	00205929	01/04/2001 00:00	2	2	BETWEEN 30-50 MPH	VERGE	1500	SINGLE ARM	NOT APPLICABLE	RIGID COLUMN	URBIS	AXIA 2 S1	PETITJEAN	SHEET STEEL	10	GALVANISED	THAMES		
46105126	SCAWBY ROAD	Scawby Parish	499110.13	406918.39	8	7007	00205930	01/04/2001 00:00	2	2	BETWEEN 30-50 MPH	FRONT OF FOOTPATH	1500	SINGLE ARM	NOT APPLICABLE	RIGID COLUMN	URBIS	AXIA 2 S1	PETITJEAN	SHEET STEEL	10	GALVANISED	THAMES		
46105126	SCAWBY ROAD	Scawby Parish	499083.01	406910.59	9	7008	00205931	01/04/2001 00:00	2	2	BETWEEN 30-50 MPH	FRONT OF FOOTPATH	1500	SINGLE ARM	NOT APPLICABLE	RIGID COLUMN	URBIS	AXIA 2 S1	PETITJEAN	SHEET STEEL	10	GALVANISED	THAMES		
46105127	SHOP LANE	Melton Ross Parish	507301	410355	1	7001	04200390	01/04/2012 00:00	3	1	LESS THAN 30MPH	ON POLE	300	SINGLE ARM	NOT APPLICABLE	POLE MOUNTED	HOLOPHANE	VMAX V1 L024	WOODEN PO	WOOD	5	NOT APPLICABI	TOFCO		
46105127	SHOP LANE	Melton Ross Parish	507255	410361	2	7002	04200391	01/04/2012 00:00	3	1	LESS THAN 30MPH	ON POLE	300	SINGLE ARM	NOT APPLICABLE	POLE MOUNTED	HOLOPHANE	VMAX V1 L024	WOODEN PO	WOOD	5	NOT APPLICABI	TOFCO		
46105127	SHOP LANE	Melton Ross Parish	507210	410365	3	7003	04200392	01/04/2012 00:00	3	1	LESS THAN 30MPH	ON POLE	300	SINGLE ARM	NOT APPLICABLE	POLE MOUNTED	HOLOPHANE	VMAX V1 L024	WOODEN PO	WOOD	5	NOT APPLICABI	TOFCO		
46105127	SHOP LANE	Melton Ross Parish	507192	410359	4	7004	04200393	01/04/1973 00:00	3	1	LESS THAN 30MPH	ON POLE	300	SINGLE ARM	NOT APPLICABLE	POLE MOUNTED	HOLOPHANE	VMAX V1 L024	WOODEN PO	WOOD	5	NOT APPLICABI	UNKNOWN		
46105127	SHOP LANE	Melton Ross Parish	507187	410309	5	7005	04200394	01/04/2012 00:00	3	1	LESS THAN 30MPH	ON POLE	300	SINGLE ARM	NOT APPLICABLE	POLE MOUNTED	HOLOPHANE	VMAX V1 L024	WOODEN PO	WOOD	5	NOT APPLICABI	TOFCO		
46105129	PASTURE ROAD SOUTH	Barton upon Humber Parish	503578.55	422388.2	1	7000	00205970	01/04/2000 00:00	5	2	LESS THAN 30MPH	BACK OF FOOTPATH	0	POST TOP	NOT APPLICABLE	RIGID COLUMN	URBIS	AXIA 2 S1	MALLATITE	TUBULAR STEEL	6	GALVANISED	STEPPED TUBULAR		
46105129	PASTURE ROAD SOUTH	Barton upon Humber Parish	503832.54	422414.42	10	7009	00205979	01/04/2002 00:00	5	2	NOT ON A ROAD	VERGE	0	POST TOP	NOT APPLICABLE	MID HINGED	URBIS	AXIA 2 S1	PETITJEAN	SHEET STEEL	5	GALVANISED	LEVEN		
46105129	PASTURE ROAD SOUTH	Barton upon Humber Parish	503885.32	422414.54	11	7010	00205980	01/04/2002 00:00	5	2	NOT ON A ROAD	VERGE	0	POST TOP	NOT APPLICABLE	MID HINGED	URBIS	AXIA 2 S1	PETITJEAN	SHEET STEEL	5	GALVANISED	LEVEN		
46105129	PASTURE ROAD SOUTH	Barton upon Humber Parish	503915.05	422415.42	12	7011	00205981	01/04/2002 00:00	5	2	NOT ON A ROAD	VERGE	0	POST TOP	NOT APPLICABLE	MID HINGED	URBIS	AXIA 2 S1	PETITJEAN	SHEET STEEL	5	GALVANISED	LEVEN		
46105129	PASTURE ROAD SOUTH	Barton upon Humber Parish	503945.62	422418.3	13	7012	00205982	01/04/2002 00:00	5	2	NOT ON A ROAD	VERGE	0	POST TOP	NOT APPLICABLE	MID HINGED	URBIS	AXIA 2 S1	PETITJEAN	SHEET STEEL	5	GALVANISED	LEVEN		
46105129	PASTURE ROAD SOUTH	Barton upon Humber Parish	503977.75	422423.1	14	7013	00205983	01/04/2002 00:00	5	2	NOT ON A ROAD	VERGE	0	POST TOP	NOT APPLICABLE	MID HINGED	URBIS	AXIA 2 S1	PETITJEAN	SHEET STEEL	5	GALVANISED	LEVEN		
46105129	PASTURE ROAD SOUTH	Barton upon Humber Parish	504012.24	422433.53	15	7014	00205984	01/04/1995 00:00	5	2	NOT ON A ROAD	BACK OF FOOTPATH	0	POST TOP	NOT APPLICABLE	MID HINGED	URBIS	AXIA 2 S1	PETITJEAN	SHEET STEEL	5	GALVANISED	NIDD		
46105129	PASTURE ROAD SOUTH	Barton upon Humber Parish	503610.19	422381.74	2	7001	00205971	01/04/2000 00:00	5	2	LESS THAN 30MPH	BACK OF FOOTPATH	0	POST TOP	NOT APPLICABLE	RIGID COLUMN	URBIS	AXIA 2 S1	MALLATITE	TUBULAR STEEL	6	GALVANISED	STEPPED TUBULAR		
46105129	PASTURE ROAD SOUTH	Barton upon Humber Parish	503643.35	422393.73	3	7002	00205972	01/04/2000 00:00	5	2	LESS THAN 30MPH	BACK OF FOOTPATH	0	POST TOP	NOT APPLICABLE	RIGID COLUMN	URBIS	AXIA 2 S1	MALLATITE	TUBULAR STEEL	6	GALVANISED	STEPPED TUBULAR		
46105129	PASTURE ROAD SOUTH	Barton upon Humber Parish	503673.22	422384.26	4	7003	00205973	01/04/2000 00:00	5	2	LESS THAN 30MPH	BACK OF FOOTPATH	0	POST TOP	NOT APPLICABLE	RIGID COLUMN	URBIS	AXIA 2 S1	MALLATITE	TUBULAR STEEL	6	GALVANISED	STEPPED TUBULAR		
46105129	PASTURE ROAD SOUTH	Barton upon Humber Parish	503702.29	422396.14	5	7004	00205974	01/04/2000 00:00	5	2	LESS THAN 30MPH	BACK OF FOOTPATH	0	POST TOP	NOT APPLICABLE	RIGID COLUMN	URBIS	AXIA 2 S1	MALLATITE	TUBULAR STEEL	6	GALVANISED	STEPPED TUBULAR		
46105129	PASTURE ROAD SOUTH	Barton upon Humber Parish	503729.96	422387.37	6	7005	00205975	01/04/2000 00:00	5	2	LESS THAN 30MPH	VERGE	0	POST TOP	NOT APPLICABLE	RIGID COLUMN	URBIS	AXIA 2 S1	MALLATITE	TUBULAR STEEL	6	GALVANISED	STEPPED TUBULAR		
46105129	PASTURE ROAD SOUTH	Barton upon Humber Parish	503756.96	422394.89	7	7006	00205976	01/04/2000 00:00	5	2	LESS THAN 30MPH	BACK OF FOOTPATH	0	POST TOP	NOT APPLICABLE	RIGID COLUMN	URBIS	AXIA 2 S1	MALLATITE	TUBULAR STEEL	6	GALVANISED	STEPPED TUBULAR		
46105129	PASTURE ROAD SOUTH	Barton upon Humber Parish	503784.58	422411.37	8	7007	00205977	01/04/2002 00:00	5	2	NOT ON A ROAD	VERGE	0	POST TOP	NOT APPLICABLE	MID HINGED	URBIS	AXIA 2 S1	PETITJEAN	SHEET STEEL	5	GALVANISED	LEVEN		
46105129	PASTURE ROAD SOUTH	Barton upon Humber Parish	503807.13	422413.3	9	7008	00205978	22/10/2019 00:00	5	2	NOT ON A ROAD	VERGE	0	POST TOP	NOT APPLICABLE	MID HINGED	URBIS	AXIA 2 S1	MALLATITE	SHEET STEEL	6	GALVANISED	LEVEN		
46105133	BURGON CRESCENT	Winterton Parish	493112.03	418732.74	1	7000	00205988	01/04/2001 00:00	1	1	LESS THAN 30MPH	VERGE	0	POST TOP	NOT APPLICABLE	RIGID COLUMN	URBIS	AXIA 2 S1	MALLATITE	TUBULAR STEEL	5	GALVANISED	STEPPED TUBULAR		
46105133	BURGON CRESCENT	Winterton Parish	493018	418648	10	7009	04200147	01/04/2015 00:00	1	1	LESS THAN 30MPH	VERGE	0	POST TOP	NOT APPLICABLE	RIGID COLUMN	URBIS	AXIA 2 S1	MALLATITE	TUBULAR STEEL	5	GALVANISED	STEPPED TUBULAR		
46105133	BURGON CRESCENT	Winterton Parish	493080.4	418737.35	2	7001	00205989	01/04/2001 00:00	1	1	LESS THAN 30MPH	VERGE	0	POST TOP	NOT APPLICABLE	RIGID COLUMN	URBIS	AXIA 2 S1	MALLATITE	TUBULAR STEEL	5	GALVANISED	STEPPED TUBULAR		
46105133	BURGON CRESCENT	Winterton Parish	493058.11	418724.66	3	7002	00205990	01/04/2001 00:00	1	1	LESS THAN 30MPH	VERGE	0	POST TOP	NOT APPLICABLE	RIGID COLUMN	URBIS	AXIA 2 S1	MALLATITE	TUBULAR STEEL	5	GALVANISED	STEPPED TUBULAR		
46105133	BURGON CRESCENT	Winterton Parish	493034.05	418721.29	4	7003	00205991	01/04/2001 00:00	1	1	LESS THAN 30MPH	VERGE	0	POST TOP	NOT APPLICABLE	RIGID COLUMN	URBIS	AXIA 2 S1	MALLATITE	TUBULAR STEEL	5	GALVANISED	STEPPED TUBULAR		
46105133	BURGON CRESCENT	Winterton Parish	493004.12	418716.91	5	7004	00205992	01/04/2001 00:00	1	1	LESS THAN 30MPH	VERGE	0	POST TOP	NOT APPLICABLE	RIGID COLUMN	URBIS	AXIA 2 S1	MALLATITE	TUBULAR STEEL	5	GALVANISED	STEPPED TUBULAR		
46105133	BURGON CRESCENT	Winterton Parish	492989.75	418721.53	6	7005	00205993	01/04/2001 00:00	1	1	LESS THAN 30MPH	VERGE	0	POST TOP	NOT APPLICABLE	RIGID COLUMN	URBIS	AXIA 2 S1	MALLATITE	TUBULAR STEEL	5	GALVANISED	STEPPED TUBULAR		
46105133	BURGON CRESCENT	Winterton Parish	492985.94	418689.96	7	7006	00205994	01/04/2002 00:00	1	1	LESS THAN 30MPH	VERGE	0	POST TOP	NOT APPLICABLE	RIGID COLUMN	URBIS	AXIA 2 S1	MALLATITE	TUBULAR STEEL	5	GALVANISED	STEPPED TUBULAR		
46105133	BURGON CRESCENT	Winterton Parish	492987	418659	8	7007	04200145	01/04/2015 00:00	1	1	LESS THAN 30MPH	VERGE	0	POST TOP	NOT APPLICABLE	RIGID COLUMN	URBIS	AXIA 2 S1	MALLATITE	TUBULAR STEEL	5	GALVANISED	STEPPED TUBULAR		
46105133	BURGON CRESCENT	Winterton Parish	492988	418646	9	7008	04200146	01/04/2015 00:00	1	1	LESS THAN 30MPH	VERGE	0	POST TOP	NOT APPLICABLE	RIGID COLUMN	URBIS	AXIA 2 S1	MALLATITE	TUBULAR STEEL	5	GALVANISED	STEPPED TUBULAR		
46105134	SANDERSON CLOSE	Scunthorpe	489498.15	410436.29	1	7000	00205995	01/04/2001 00:00	2	4	LESS THAN 30MPH	BACK OF FOOTPATH	0	POST TOP	NOT APPLICABLE	RIGID COLUMN	URBIS	AXIA 2 S1	MALLATITE	TUBULAR STEEL	5	GALVANISED	STEPPED TUBULAR		
46105134	SANDERSON CLOSE	Scunthorpe	489521.34	410431.94	2	7001	00205996	01/04/2001 00:00	2	4	LESS THAN 30MPH	BACK OF FOOTPATH	0	POST TOP	NOT APPLICABLE	RIGID COLUMN	URBIS	AXIA 2 S1	MALLATITE	TUBULAR STEEL	5	GALVANISED	STEPPED TUBULAR		
46105134	SANDERSON CLOSE	Scunthorpe	489551.83	410441.09	3	7002	00205997	01/04/2001 00:00	2	4	LESS THAN 30MPH	BACK OF FOOTPATH	0	POST TOP	NOT APPLICABLE	RIGID COLUMN	URBIS	AXIA 2 S1	MALLATITE	TUBULAR STEEL	5	GALVANISED	STEPPED TUBULAR		
46105134	SANDERSON CLOSE	Scunthorpe	489567.06	410440.94	4	7003	00205998	01/04/2001 00:00	2	4	LESS THAN 30MPH	BACK OF FOOTPATH	0	POST TOP	NOT APPLICABLE	RIGID COLUMN	URBIS	AXIA 2 S1	MALLATITE	TUBULAR STEEL	5	GALVANISED	STEPPED TUBULAR		
46105135	JESMOND AVENUE	Bottesford Parish	488204.47	407054.01	1	7000	00205999	01/04/2001 00:00	3	1	LESS THAN 30MPH	VERGE	0	POST TOP	NOT APPLICABLE	RIGID COLUMN	URBIS	AXIA 2 S1	PETITJEAN	TUBULAR STEEL	5	GALVANISED	METRO		
46105135	JESMOND AVENUE	Bottesford Parish	488206.08	407029.82	2	7001	00206000	01/04/2001 00:00	3	1	LESS THAN 30MPH	VERGE	0	POST TOP	NOT APPLICABLE	RIGID COLUMN	URBIS	AXIA 2 S1	PETITJEAN	TUBULAR STEEL	5	GALVANISED	METRO		
46105135	JESMOND AVENUE	Bottesford Parish	488214.72	407015.66	3	7002	00206001	01/04/2001 00:00	3	1	LESS THAN 30MPH	VERGE	0	POST TOP	NOT APPLICABLE	RIGID COLUMN	URBIS	AXIA 2 S1	PETITJEAN	TUBULAR STEEL	5	GALVANISED	METRO		
46105136	NUTWOOD VIEW	Scunthorpe	490674.56	407767.05	1	7000	00206002	01/04/2001 00:00	1	3	LESS THAN 30MPH	BACK OF FOOTPATH	0	POST TOP	NOT APPLICABLE	RIGID COLUMN	URBIS	AXIA 2 S1	MALLATITE	TUBULAR STEEL	6	GALVANISED	STEPPED TUBULAR		
46105136	NUTWOOD VIEW	Scunthorpe	490665.86	407789.47	2	7001	00206003	01/04/2001 00:00	1	3	LESS THAN 30MPH	VERGE	0	POST TOP	NOT APPLICABLE	RIGID COLUMN	URBIS	AXIA 2 S1	MALLATITE	TUBULAR STEEL	6	GALVANISED	STEPPED TUBULAR		
46105136	NUTWOOD VIEW	Scunthorpe	490653.8	407789.69	3	7002	00206004	01/04/2001 00:00	1	3	LESS THAN 30MPH	VERGE	0	POST TOP	NOT APPLICABLE	RIGID COLUMN	URBIS	AXIA 2 S1	MALLATITE	TUBULAR STEEL	6	GALVANISED	STEPPED TUBULAR		
46105137	FAIRFIELDS	Kirton in Lindsey Parish	493489.98	398128.2	1	7000	00206005	01/04/2001 00:00	1	3	LESS THAN 30MPH	BACK OF FOOTPATH	0	POST TOP	NOT APPLICABLE	RIGID COLUMN	URBIS	AXIA 2 S1	MALLATITE	TUBULAR STEEL	6	GALVANISED	STEPPED TUBULAR		
46105137	FAIRFIELDS	Kirton in Lindsey Parish	493499.97	398096.34	2	7001	00206006	01/04/2001 00:00	1	3	LESS THAN 30MPH	BACK OF FOOTPATH	0	POST TOP	NOT APPLICABLE	RIGID COLUMN	URBIS	AXIA 2 S1	MALLATITE	TUBULAR STEEL	6	GALVANISED	STEPPED TUBULAR		
46105137	FAIRFIELDS	Kirton in Lindsey Parish	493530.24	398080.02	3	7002	00206007	01/04/2001 00:00	1	3	LESS THAN 30MPH	BACK OF FOOTPATH	0	POST TOP	NOT APPLICABLE	RIGID COLUMN	URBIS	AXIA 2 S1	MALLATITE	TUBULAR STEEL	6	GALVANISED	STEPPED TUBULAR		
46105137	FAIRFIELDS	Kirton in Lindsey Parish	493544.45	398046.58	4	7003	00206008	01/04/2001 00:00	1	3	LESS THAN 30MPH	BACK OF FOOTPATH	0	POST TOP	NOT APPLICABLE	RIGID COLUMN	URBIS	AXIA 2 S1	MALLATITE	TUBULAR STEEL	6	GALVANISED	STEPPED TUBULAR		
46105137	FAIRFIELDS	Kirton in Lindsey Parish	493575.35	398038.73	5	7004	00206009	01/04/2001 00:00	1	3	LESS THAN 30MPH	BACK OF FOOTPATH	0	POST TOP	NOT APPLICABLE	RIGID COLUMN	URBIS	AXIA 2 S1	MALLATITE	TUBULAR STEEL	6	GALVANISED	STEPPED TUBULAR		
46105137	FAIRFIELDS	Kirton in Lindsey Parish	493593.17	398010.37	6	7005	00206010	01/04/2001 00:00	1	3	LESS THAN 30MPH	BACK OF FOOTPATH	0	POST TOP	NOT APPLICABLE	RIGID COLUMN	URBIS	AXIA 2 S1	MALLATITE	TUBULAR STEEL	6	GALVANISED	STEPPED TUBULAR		
46105138	WILLOUGHBY ROAD	Hibaldstow Parish	498119.03	402262.94	1	7000	00206011	01/04/2001 00:00	1	4	LESS THAN 30MPH	BACK OF FOOTPATH	0	POST TOP	NOT APPLICABLE	RIGID COLUMN	URBIS	AXIA 2 S1	MALLATITE	TUBULAR STEEL	5	GALVANISED	STEPPED TUBULAR		
46105138	WILLOUGHBY ROAD	Hibaldstow Parish	498090.57	402249.78	2	7001	00206012	01/04/2001 00:00	1	4	LESS THAN 30MPH	BACK OF FOOTPATH	0	POST TOP	NOT APPLICABLE	RIGID COLUMN	URBIS	AXIA 2 S1	MALLATITE	TUBULAR STEEL	5	GALVANISED	STEPPED TUBULAR		
46105138	WILLOUGHBY ROAD	Hibaldstow Parish	498063.31	402240.18	3	7002	00206013	01/04/2001 00:00	1	4	LESS THAN 30MPH	BACK OF FOOTPATH	0	POST TOP	NOT APPLICABLE	RIGID COLUMN	URBIS	AXIA 2 S1	MALLATITE	TUBULAR STEEL	5	GALVANISED	STEPPED TUBULAR		
46105138	WILLOUGHBY ROAD	Hibaldstow Parish	498034.23	402246.27	4	7003	00206014	01/04/2001 00:00	1	4	LESS THAN 30MPH	BACK OF FOOTPATH	0	POST TOP	NOT APPLICABLE	RIGID COLUMN	URBIS	AXIA 2 S1	MALLATITE	TUBULAR STEEL	5	GALVANISED	STEPPED TUBULAR		
46105138	WILLOUGHBY ROAD	Hibaldstow Parish	498004.46	402226.66	5	7004	00206015	01/04/2001 00:00	1	4	LESS THAN 30MPH	BACK OF FOOTPATH	0	POST TOP	NOT APPLICABLE	RIGID COLUMN	URBIS	AXIA 2 S1	MALLATITE	TUBULAR STEEL	5	GALVANISED	STEPPED TUBULAR		
46105138	WILLOUGHBY ROAD	Hibaldstow Parish	498005.75	402207.42	6	7005	00206016	01/04/2001 00:00	1	4	LESS THAN 30MPH	BACK OF FOOTPATH	0	POST TOP	NOT APPLICABLE	RIGID COLUMN	URBIS	AXIA 2 S1	MALLATITE	TUBULAR STEEL	5	GALVANISED	STEPPED TUBULAR		
46105138	WILLOUGHBY ROAD	Hibaldstow Parish	498008.45	402183.07	7	7006	00206017	01/04/2001 00:00	1	4	LESS THAN 30MPH	BACK OF FOOTPATH	0	POST TOP	NOT APPLICABLE	RIGID COLUMN	URBIS	AXIA 2 S1	MALLATITE	TUBULAR STEEL	5	GALVANISED	STEPPED TUBULAR		
46105139	COULSON CLOSE	Hibaldstow Parish	498055.57	402257.27	1	7000	00206018	01/04/2001 00:00	1	4	LESS THAN 30MPH	VERGE	0	POST TOP	NOT APPLICABLE	RIGID COLUMN	URBIS	AXIA 2 S1	MALLATITE	TUBULAR STEEL	5	GALVANISED	STEPPED TUBULAR		
46105139	COULSON CLOSE	Hibaldstow Parish	498040.38	402290.02	2	7001	00206019	01/04/2001 00:00	1	4	LESS THAN 30MPH	BACK OF FOOTPATH	0	POST TOP	NOT APPLICABLE	RIGID COLUMN	URBIS	AXIA 2 S1	MALLATITE	TUBULAR STEEL	5	GALVANISED	STEPPED TUBULAR		
46105139	COULSON CLOSE	Hibaldstow Parish	498023.11	402285	3	7002	00206020	01/04/2001 00:00	1	4	LESS THAN 30MPH	BACK OF FOOTPATH	0	POST TOP	NOT APPLICABLE	RIGID COLUMN	URBIS	AXIA 2 S1	MALLATITE	TUBULAR STEEL	5	GALVANISED	STEPPED TUBULAR		
46105140	POPPYFIELD WAY	Brigg Parish	499810.74	407742.11	1	7000	00206021	01/04/2001 00:00	2	3	LESS THAN 30MPH	BACK OF FOOTPATH	0	POST TOP	NOT APPLICABLE	RIGID COLUMN	URBIS	AXIA 2 S1	FABRIKAT	TUBULAR STEEL	5	GALVANISED	5M01A		
46105140	POPPYFIELD WAY	Brigg Parish	499827.08	407783.54	2	7001	00206022	01/04/2001 00:00	2	3	LESS THAN 30MPH	BACK OF FOOTPATH	0	POST TOP	NOT APPLICABLE	RIGID COLUMN	URBIS	AXIA 2 S1	FABRIKAT	TUBULAR STEEL	5	GALVANISED	5M01A		
46105140	POPPYFIELD WAY	Brigg Parish	499845.83	407810.58	3	7002	00206023	01/04/2001 00:00	2	3	LESS THAN 30MPH	BACK OF FOOTPATH	0	POST TOP	NOT APPLICABLE	RIGID COLUMN	URBIS	AXIA 2 S1	FABRIKAT	TUBULAR STEEL	5	GALVANISED	5M01A		
46105140	POPPYFIELD WAY	Brigg Parish	499830.66	407844.25	4	7003	00206024	01/04/2001 00:00	2	3	LESS THAN 30MPH	BACK OF FOOTPATH	0	POST TOP	NOT APPLICABLE	RIGID COLUMN	URBIS	AXIA 2 S1	FABRIKAT	TUBULAR STEEL	5	GALVANISED	5M01A	

46105179	A18 FROM A161 TO ALTHORPE	Crowle Parish	478316.97	410619.8	36	7035	00206203	01/04/1993 00:00	5	1	GREATER THAN 50MPH	VERGE	1000	SINGLE ARM	MID GREY	RIGID COLUMN	URBIS	AXIA 2 S1	PETITJEAN	SHEET STEEL	10	PAINTED	THAMES
46105179	A18 FROM A161 TO ALTHORPE	Crowle Parish	478344.59	410621	37	7036	00206204	01/04/1993 00:00	5	1	GREATER THAN 50MPH	SPLITTER ISLAND	1000	SINGLE ARM	MID GREY	RIGID COLUMN	URBIS	AXIA 2 S1	PETITJEAN	SHEET STEEL	10	PAINTED	THAMES
46105179	A18 FROM A161 TO ALTHORPE	Crowle Parish	478363	410603.78	38	7037	00206205	01/04/1993 00:00	5	1	GREATER THAN 50MPH	VERGE	1000	SINGLE ARM	MID GREY	RIGID COLUMN	URBIS	AXIA 2 S1	PETITJEAN	SHEET STEEL	10	PAINTED	THAMES
46105179	A18 FROM A161 TO ALTHORPE	Crowle Parish	478380.74	410576.36	39	7038	00206206	01/04/1993 00:00	5	1	GREATER THAN 50MPH	VERGE	1000	SINGLE ARM	MID GREY	RIGID COLUMN	URBIS	AXIA 2 S1	PETITJEAN	SHEET STEEL	10	PAINTED	THAMES
46105179	A18 FROM A161 TO ALTHORPE	Crowle Parish	478586.29	410391.96	4	7003	00206171	01/04/1993 00:00	5	1	GREATER THAN 50MPH	VERGE	1500	SINGLE ARM	NOT APPLICABLE	RIGID COLUMN	URBIS	AXIA 2 S1	PETITJEAN	SHEET STEEL	10	GALVANISED	THAMES
46105179	A18 FROM A161 TO ALTHORPE	Crowle Parish	478397.19	410552.35	40	7039	00206207	01/04/1993 00:00	5	1	GREATER THAN 50MPH	VERGE	1000	SINGLE ARM	MID GREY	RIGID COLUMN	URBIS	AXIA 2 S1	PETITJEAN	SHEET STEEL	10	PAINTED	THAMES
46105179	A18 FROM A161 TO ALTHORPE	Crowle Parish	478389.13	410537.83	41	7040	00206208	11/12/2020 00:00	5	1	GREATER THAN 50MPH	VERGE	1000	SINGLE ARM	NOT APPLICABLE	RIGID COLUMN	URBIS	AXIA 2 S1	MALLATITE	TUBULAR STEEL	10	GALVANISED	TUBULAR
46105179	A18 FROM A161 TO ALTHORPE	Crowle Parish	478368.7	410515.25	42	7041	00206209	04/05/2023 00:00	5	1	GREATER THAN 50MPH	VERGE	1000	SINGLE ARM	NOT APPLICABLE	RIGID COLUMN	URBIS	AXIA 2 S1	MALLATITE	TUBULAR STEEL	10	GALVANISED	TUBULAR
46105179	A18 FROM A161 TO ALTHORPE	Crowle Parish	478421.8	410521.22	43	7042	00206210	01/04/1993 00:00	5	1	GREATER THAN 50MPH	VERGE	1000	SINGLE ARM	MID GREY	RIGID COLUMN	URBIS	AXIA 2 S1	PETITJEAN	SHEET STEEL	10	PAINTED	THAMES
46105179	A18 FROM A161 TO ALTHORPE	Crowle Parish	478447.51	410488.26	44	7043	00206211	01/04/1993 00:00	5	1	GREATER THAN 50MPH	VERGE	1000	SINGLE ARM	MID GREY	RIGID COLUMN	URBIS	AXIA 2 S1	PETITJEAN	SHEET STEEL	10	PAINTED	THAMES
46105179	A18 FROM A161 TO ALTHORPE	Crowle Parish	478477.61	410464.6	45	7044	00206212	01/04/1993 00:00	5	1	GREATER THAN 50MPH	VERGE	1000	SINGLE ARM	MID GREY	RIGID COLUMN	URBIS	AXIA 2 S1	PETITJEAN	SHEET STEEL	10	PAINTED	THAMES
46105179	A18 FROM A161 TO ALTHORPE	Crowle Parish	478522.96	410440.59	46	7045	00206213	01/04/1993 00:00	5	1	GREATER THAN 50MPH	VERGE	1500	SINGLE ARM	NOT APPLICABLE	RIGID COLUMN	URBIS	AXIA 2 S1	PETITJEAN	SHEET STEEL	10	GALVANISED	THAMES
46105179	A18 FROM A161 TO ALTHORPE	Crowle Parish	478565.97	410419.74	47	7046	00206214	01/04/1993 00:00	5	1	GREATER THAN 50MPH	VERGE	1500	SINGLE ARM	NOT APPLICABLE	RIGID COLUMN	URBIS	AXIA 2 S1	PETITJEAN	SHEET STEEL	10	GALVANISED	THAMES
46105179	A18 FROM A161 TO ALTHORPE	Crowle Parish	478622.42	410391.25	48	7047	00206215	01/04/1993 00:00	5	1	GREATER THAN 50MPH	VERGE	1500	SINGLE ARM	NOT APPLICABLE	RIGID COLUMN	URBIS	AXIA 2 S1	PETITJEAN	SHEET STEEL	10	GALVANISED	THAMES
46105179	A18 FROM A161 TO ALTHORPE	Crowle Parish	478678.92	410363.1	49	7048	00206216	01/04/1993 00:00	5	1	GREATER THAN 50MPH	VERGE	1500	SINGLE ARM	NOT APPLICABLE	RIGID COLUMN	URBIS	AXIA 2 S1	PETITJEAN	SHEET STEEL	10	GALVANISED	THAMES
46105179	A18 FROM A161 TO ALTHORPE	Crowle Parish	478536.37	410413.87	5	7004	00206172	01/04/1993 00:00	5	1	GREATER THAN 50MPH	VERGE	1500	SINGLE ARM	NOT APPLICABLE	RIGID COLUMN	URBIS	AXIA 2 S1	PETITJEAN	SHEET STEEL	10	GALVANISED	THAMES
46105179	A18 FROM A161 TO ALTHORPE	Crowle Parish	478488.78	410438.03	6	7005	00206173	01/04/1993 00:00	5	1	GREATER THAN 50MPH	VERGE	1500	SINGLE ARM	NOT APPLICABLE	RIGID COLUMN	URBIS	AXIA 2 S1	PETITJEAN	SHEET STEEL	10	GALVANISED	THAMES
46105179	A18 FROM A161 TO ALTHORPE	Crowle Parish	478465.4	410448.73	7	7006	00206174	01/04/1993 00:00	5	1	GREATER THAN 50MPH	VERGE	1500	SINGLE ARM	DARK GREY	RIGID COLUMN	URBIS	AXIA 2 S1	PETITJEAN	SHEET STEEL	10	PAINTED	THAMES
46105179	A18 FROM A161 TO ALTHORPE	Crowle Parish	478438.53	410459	8	7007	00206175	01/04/1993 00:00	5	1	GREATER THAN 50MPH	VERGE	1500	SINGLE ARM	NOT APPLICABLE	RIGID COLUMN	URBIS	AXIA 2 S1	PETITJEAN	SHEET STEEL	10	GALVANISED	THAMES
46105179	A18 FROM A161 TO ALTHORPE	Crowle Parish	478413.18	410470.35	9	7008	00206176	01/04/1993 00:00	5	1	GREATER THAN 50MPH	VERGE	1500	SINGLE ARM	NOT APPLICABLE	RIGID COLUMN	URBIS	AXIA 2 S1	PETITJEAN	SHEET STEEL	10	GALVANISED	THAMES
46105180	A18 FROM A161 TO ALTHORPE	Keadby with Althorpe Parish	484013.76	410649.91	1	7000	00206217	19/12/2022 00:00	4	3	LESS THAN 30MPH	VERGE	1000	SINGLE ARM	NOT APPLICABLE	RIGID COLUMN	URBIS	AXIA 2 S1	MALLATITE	TUBULAR STEEL	8	GALVANISED	TUBULAR
46105180	A18 FROM A161 TO ALTHORPE	Keadby with Althorpe Parish	483830.52	410632.03	10	7009	00206226	01/04/1970 00:00	4	3	LESS THAN 30MPH	FRONT OF FOOTPATH	2000	SINGLE ARM	MID GREY	RIGID COLUMN	URBIS	AXIA 2 S1	HEMCOL	TUBULAR STEEL	8	PAINTED	OTHER
46105180	A18 FROM A161 TO ALTHORPE	Keadby with Althorpe Parish	483801.04	410632.09	11	7010	00206227	01/04/1970 00:00	4	3	LESS THAN 30MPH	FRONT OF FOOTPATH	2500	SINGLE ARM	MID GREY	RIGID COLUMN	URBIS	AXIA 2 S1	HEMCOL	TUBULAR STEEL	8	PAINTED	OTHER
46105180	A18 FROM A161 TO ALTHORPE	Keadby with Althorpe Parish	483780.66	410622.36	12	7011	00206228	01/04/1970 00:00	4	3	LESS THAN 30MPH	BACK OF FOOTPATH	1500	SINGLE ARM	MID GREY	RIGID COLUMN	URBIS	AXIA 2 S1	HEMCOL	TUBULAR STEEL	8	PAINTED	OTHER
46105180	A18 FROM A161 TO ALTHORPE	Keadby with Althorpe Parish	483778.3	410640.93	13	7012	00206229	01/04/1980 00:00	4	3	LESS THAN 30MPH	BACK OF FOOTPATH	1250	SINGLE ARM	MID GREY	RIGID COLUMN	URBIS	AXIA 2 S1	PETITJEAN	SHEET STEEL	8	PAINTED	THAMES
46105180	A18 FROM A161 TO ALTHORPE	Keadby with Althorpe Parish	483745.51	410646.3	14	7013	00206230	01/04/1980 00:00	4	3	LESS THAN 30MPH	VERGE	1250	SINGLE ARM	NOT APPLICABLE	RIGID COLUMN	URBIS	AXIA 2 S1	PETITJEAN	SHEET STEEL	8	GALVANISED	THAMES
46105180	A18 FROM A161 TO ALTHORPE	Keadby with Althorpe Parish	483723.52	410628.13	15	7014	00206231	01/04/1970 00:00	4	3	LESS THAN 30MPH	FRONT OF FOOTPATH	2000	SINGLE ARM	MID GREY	RIGID COLUMN	URBIS	AXIA 2 S1	HEMCOL	TUBULAR STEEL	8	PAINTED	OTHER
46105180	A18 FROM A161 TO ALTHORPE	Keadby with Althorpe Parish	483730.9	410590.8	17	7016	00206233	20/05/2023 00:00	4	3	LESS THAN 30MPH	BACK OF FOOTPATH	1000	SINGLE ARM	NOT APPLICABLE	RIGID COLUMN	URBIS	AXIA 2 S1	MALLATITE	TUBULAR STEEL	8	GALVANISED	TUBULAR
46105180	A18 FROM A161 TO ALTHORPE	Keadby with Althorpe Parish	483714.34	410568.05	18	7017	00206234	01/04/1970 00:00	4	3	LESS THAN 30MPH	FRONT OF FOOTPATH	1500	SINGLE ARM	MID GREY	RIGID COLUMN	URBIS	AXIA 2 S1	HEMCOL	TUBULAR STEEL	8	PAINTED	OTHER
46105180	A18 FROM A161 TO ALTHORPE	Keadby with Althorpe Parish	483722.36	410536.03	19	7018	00206235	01/04/1970 00:00	4	3	GREATER THAN 50MPH	FRONT OF FOOTPATH	1500	SINGLE ARM	MID GREY	RIGID COLUMN	URBIS	AXIA 2 S1	HEMCOL	TUBULAR STEEL	8	PAINTED	OTHER
46105180	A18 FROM A161 TO ALTHORPE	Keadby with Althorpe Parish	483990.85	410650.76	2	7001	00206218	21/06/2024 00:00	4	3	LESS THAN 30MPH	VERGE	1000	SINGLE ARM	NOT APPLICABLE	RIGID COLUMN	URBIS	AXIA 2 S1	MALLATITE	TUBULAR STEEL	8	GALVANISED	TUBULAR
46105180	A18 FROM A161 TO ALTHORPE	Keadby with Althorpe Parish	483706.17	410510.26	20	7019	00206236	01/04/1970 00:00	4	3	GREATER THAN 50MPH	FRONT OF FOOTPATH	1500	SINGLE ARM	MID GREY	RIGID COLUMN	URBIS	AXIA 2 S1	HEMCOL	TUBULAR STEEL	8	PAINTED	OTHER
46105180	A18 FROM A161 TO ALTHORPE	Keadby with Althorpe Parish	483707.63	410463.13	21	7020	00206237	01/04/2003 00:00	4	3	GREATER THAN 50MPH	VERGE	1250	SINGLE ARM	NOT APPLICABLE	RIGID COLUMN	URBIS	AXIA 2 S1	PETITJEAN	SHEET STEEL	10	GALVANISED	THAMES
46105180	A18 FROM A161 TO ALTHORPE	Keadby with Althorpe Parish	483699.23	410423.16	22	7021	00206238	01/04/2003 00:00	4	3	GREATER THAN 50MPH	VERGE	1250	SINGLE ARM	NOT APPLICABLE	RIGID COLUMN	URBIS	AXIA 2 S1	PETITJEAN	SHEET STEEL	10	GALVANISED	THAMES
46105180	A18 FROM A161 TO ALTHORPE	Keadby with Althorpe Parish	483677.39	410392.96	23	7022	00206239	01/04/2003 00:00	4	3	GREATER THAN 50MPH	BACK OF FOOTPATH	1250	SINGLE ARM	NOT APPLICABLE	RIGID COLUMN	URBIS	AXIA 2 S1	PETITJEAN	SHEET STEEL	10	GALVANISED	THAMES
46105180	A18 FROM A161 TO ALTHORPE	Keadby with Althorpe Parish	483679.2	410349.66	24FP	7023	00206240	01/04/2003 00:00	4	3	GREATER THAN 50MPH	SPLITTER ISLAND	1250	SINGLE ARM	NOT APPLICABLE	RIGID COLUMN	URBIS	AXIA 2 S1	PETITJEAN	SHEET STEEL	10	GALVANISED	THAMES
46105180	A18 FROM A161 TO ALTHORPE	Keadby with Althorpe Parish	483656.03	410328.91	25	7024	00206241	01/04/2003 00:00	4	3	GREATER THAN 50MPH	BACK OF FOOTPATH	1250	SINGLE ARM	NOT APPLICABLE	RIGID COLUMN	URBIS	AXIA 2 S1	PETITJEAN	SHEET STEEL	10	GALVANISED	THAMES
46105180	A18 FROM A161 TO ALTHORPE	Keadby with Althorpe Parish	483659.36	410296.35	26	7025	00206242	01/04/2003 00:00	4	3	GREATER THAN 50MPH	SPLITTER ISLAND	1250	SINGLE ARM	NOT APPLICABLE	RIGID COLUMN	URBIS	AXIA 2 S1	PETITJEAN	SHEET STEEL	10	GALVANISED	THAMES
46105180	A18 FROM A161 TO ALTHORPE	Keadby with Althorpe Parish	483644.97	410259.6	27	7026	00206243	01/04/2003 00:00	4	3	GREATER THAN 50MPH	VERGE	1250	SINGLE ARM	NOT APPLICABLE	RIGID COLUMN	URBIS	AXIA 2 S1	PETITJEAN	SHEET STEEL	10	GALVANISED	THAMES
46105180	A18 FROM A161 TO ALTHORPE	Keadby with Althorpe Parish	483615.51	410230.38	28	7027	00206244	01/04/2003 00:00	4	3	GREATER THAN 50MPH	BACK OF FOOTPATH	1250	SINGLE ARM	NOT APPLICABLE	RIGID COLUMN	URBIS	AXIA 2 S1	PETITJEAN	SHEET STEEL	10	GALVANISED	THAMES
46105180	A18 FROM A161 TO ALTHORPE	Keadby with Althorpe Parish	483610.24	410190.38	29	7028	00206245	01/04/2003 00:00	4	3	GREATER THAN 50MPH	VERGE	1250	SINGLE ARM	NOT APPLICABLE	RIGID COLUMN	URBIS	AXIA 2 S1	PETITJEAN	SHEET STEEL	10	GALVANISED	THAMES
46105180	A18 FROM A161 TO ALTHORPE	Keadby with Althorpe Parish	483968.07	410638.01	3	7002	00206219	01/04/1980 00:00	4	3	LESS THAN 30MPH	BACK OF FOOTPATH	1500	SINGLE ARM	MID GREY	RIGID COLUMN	URBIS	AXIA 2 S1	PETITJEAN	SHEET STEEL	8	PAINTED	THAMES
46105180	A18 FROM A161 TO ALTHORPE	Keadby with Althorpe Parish	483590.95	410155.01	30	7029	00206246	01/04/2003 00:00	4	3	GREATER THAN 50MPH	VERGE	1250	SINGLE ARM	NOT APPLICABLE	RIGID COLUMN	URBIS	AXIA 2 S1	PETITJEAN	SHEET STEEL	10	GALVANISED	THAMES
46105180	A18 FROM A161 TO ALTHORPE	Keadby with Althorpe Parish	483570.98	410119.73	31	7030	00206247	01/04/2003 00:00	4	3	GREATER THAN 50MPH	VERGE	1250	SINGLE ARM	NOT APPLICABLE	RIGID COLUMN	URBIS	AXIA 2 S1	PETITJEAN	SHEET STEEL	10	GALVANISED	THAMES
46105180	A18 FROM A161 TO ALTHORPE	Keadby with Althorpe Parish	483551.25	410088.14	32	7031	00206248	01/04/2003 00:00	4	3	GREATER THAN 50MPH	VERGE	1250	SINGLE ARM	NOT APPLICABLE	RIGID COLUMN	URBIS	AXIA 2 S1	PETITJEAN	SHEET STEEL	10	GALVANISED	THAMES
46105180	A18 FROM A161 TO ALTHORPE	Keadby with Althorpe Parish	483529.85	410055.25	33	7032	00206249	01/04/2003 00:00	4	3	GREATER THAN 50MPH	VERGE	1250	SINGLE ARM	NOT APPLICABLE	RIGID COLUMN	URBIS	AXIA 2 S1	PETITJEAN	SHEET STEEL	10	GALVANISED	THAMES
46105180	A18 FROM A161 TO ALTHORPE	Keadby with Althorpe Parish	483508.09	410026.58	34	7033	00206250	01/04/2003 00:00	4	3	GREATER THAN 50MPH	VERGE	1250	SINGLE ARM	NOT APPLICABLE	RIGID COLUMN	URBIS	AXIA 2 S1	PETITJEAN	SHEET STEEL	10	GALVANISED	THAMES
46105180	A18 FROM A161 TO ALTHORPE	Keadby with Althorpe Parish	483484.78	409997.35	35	7034	00206251	01/04/2003 00:00	4	3	GREATER THAN 50MPH	VERGE	1250	SINGLE ARM	NOT APPLICABLE	RIGID COLUMN	URBIS	AXIA 2 S1	PETITJEAN	SHEET STEEL	10	GALVANISED	THAMES
46105180	A18 FROM A161 TO ALTHORPE	Keadby with Althorpe Parish	483459.19	409966.08	36	7035	00206252	01/04/2003 00:00	4	3	GREATER THAN 50MPH	VERGE	1250	SINGLE ARM	NOT APPLICABLE	RIGID COLUMN	URBIS	AXIA 2 S1	PETITJEAN	SHEET STEEL	10	GALVANISED	THAMES
46105180	A18 FROM A161 TO ALTHORPE	Keadby with Althorpe Parish	483438.1	409941.29	37FP	7036	00206253	01/04/2003 00:00	4	3	GREATER THAN 50MPH	VERGE	1250	SINGLE ARM	NOT APPLICABLE	RIGID COLUMN	URBIS	AXIA 2 S1	PETITJEAN	SHEET STEEL	10	GALVANISED	THAMES
46105180	A18 FROM A161 TO ALTHORPE	Keadby with Althorpe Parish	483410.23	409912.44	38	7037	00206254	01/04/2003 00:00	4	3	GREATER THAN 50MPH	VERGE	1250	SINGLE ARM	NOT APPLICABLE	RIGID COLUMN	URBIS	AXIA 2 S1	PETITJEAN	SHEET STEEL	10	GALVANISED	THAMES
46105180	A18 FROM A161 TO ALTHORPE	Keadby with Althorpe Parish	483381.65	409885.66	39	7038	00206255	01/04/2003 00:00	4	3	GREATER THAN 50MPH	VERGE	1250	SINGLE ARM	NOT APPLICABLE	RIGID COLUMN	URBIS	AXIA 2 S1	PETITJEAN	SHEET STEEL	10	GALVANISED	THAMES
46105180	A18 FROM A161 TO ALTHORPE	Keadby with Althorpe Parish	483963.43	410653.46	4	7003	00206220	01/04/1970 00:00	4	3	LESS THAN 30MPH	BACK OF FOOTPATH	2000	SINGLE ARM	MID GREY	RIGID COLUMN	URBIS	AXIA 2 S1	HEMCOL	TUBULAR STEEL	8	PAINTED	OTHER
46105180	A18 FROM A161 TO ALTHORPE	Keadby with Althorpe Parish	483354.01	409861.08	40	7039	00206256	01/04/2003 00:00	4	3	GREATER THAN 50MPH	VERGE	1250	SINGLE ARM	NOT APPLICABLE	RIGID COLUMN	URBIS	AXIA 2 S1	PETITJEAN	SHEET STEEL	10	GALVANISED	THAMES
46105180	A18 FROM A161 TO ALTHORPE	Keadby with Althorpe Parish	483325.32	409835.2	41	7040	00206257	01/04/2003 00:00	4	3	GREATER THAN 50MPH	VERGE	1250	SINGLE ARM	NOT APPLICABLE	RIGID COLUMN	URBIS	AXIA 2 S1	PETITJEAN	SHEET STEEL	10	GALVANISED	THAMES
46105180	A18 FROM A161 TO ALTHORPE	Keadby with Althorpe Parish	483295.63	409812.14	42	7041	00206258	01/04/2003 00:00	4	3	GREATER THAN 50MPH	VERGE	1250	SINGLE ARM	NOT APPLICABLE	RIGID COLUMN	URBIS	AXIA 2 S1	PETITJEAN	SHEET STEEL	10	GALVANISED	THAMES
46105180	A18 FROM A161 TO ALTHORPE	Keadby with Althorpe Parish	483267.14	409791.05	43	7042	00206259	01/04/2003 00:00	4	3	GREATER THAN 50MPH	VERGE	1250	SINGLE ARM	NOT APPLICABLE	RIGID COLUMN	URBIS	AXIA 2 S1	PETITJEAN	SHEET STEEL	10	GALVANISED	THAMES
46105180	A18 FROM A161 TO ALTHORPE	Keadby with Althorpe Parish	483234.22	409785.21	44	7043	00206260	01/04/2003 00:00	4	3	GREATER THAN 50MPH	VERGE	1250	SINGLE ARM	NOT APPLICABLE	RIGID COLUMN	URBIS	AXIA 2 S1	PETITJEAN	SHEET STEEL	10	GALVANISED	THAMES
46105180	A18 FROM A161 TO ALTHORPE	Keadby with Althorpe Parish	483214.93	409758.2	45	7044	00206261	01/04/2003 00:00	4	3	GREATER THAN 50MPH	VERGE	1250	SINGLE ARM	NOT APPLICABLE	RIGID COLUMN	URBIS	AXIA 2 S1	PETITJEAN	SHEET STEEL	10	GALVANISED	THAMES
46105180	A18 FROM A161 TO ALTHORPE	Keadby with Althorpe Parish	483183.56	409742.82	46	7045	00206262	01/04/2003 00:00	4	3	GREATER THAN 50MPH	VERGE	1250	SINGLE ARM	NOT APPLICABLE	RIGID COLUMN	URBIS	AXIA 2 S1	PETITJEAN	SHEET STEEL	10	GALVANISED	THAMES
46105180	A18 FROM A161 TO ALTHORPE	Keadby with Althorpe Parish	483146.79	409723.46	47	7046	00206263	01/04/2003 00:00	4	3	GREATER THAN 50MPH	VERGE	1250	SINGLE ARM	NOT APPLICABLE	RIGID COLUMN	URBIS	AXIA 2 S1	PETITJEAN	SHEET STEEL	10	GALVANISED	THAMES
46105180	A18 FROM A161 TO ALTHORPE	Keadby with Althorpe Parish	483113.49	409706.82	48	7047	00206264	01/04/2003 00:00	4	3	GREATER THAN 50MPH	VERGE	1250	SINGLE ARM	NOT APPLICABLE	RIGID COLUMN	URBIS	AXIA 2 S1	PETITJEAN	SHEET STEEL	10	GALVANISED	THAMES
46105180	A18 FROM A161 TO ALTHORPE	Keadby with Althorpe Parish	483939.99	410634.36	5	7004	00206221	01/04/1980 00:00	4	3	LESS THAN 30MPH	BACK OF FOOTPATH	1500	SINGLE ARM	MID GREY	RIGID COLUMN	URBIS	AXIA 2 S1	PETITJEAN	SHEET STEEL	8	PAINTED	THAMES
46105180	A18 FROM A161 TO ALTHORPE	Keadby with Althorpe Parish	483938.06	410648.65	6	7005	00206222	01/04/1970 00:00	4	3	LESS THAN 30MPH	BACK OF FOOTPATH	2000	SINGLE ARM	MID GREY	RIGID COLUMN	URBIS	AXIA 2 S1	HEMCOL	TUBULAR STEEL	8	PAINTED	OTHER
46105180	A18 FROM A161 TO ALTHORPE	Keadby with Althorpe Parish	483916.37	410631.14	7	7006	00206223	01/04/1970 00:00	4	3	LESS THAN 30MPH	BACK OF FOOTPATH	1500	SINGLE ARM	MID GREY	RIGID COLUMN	URBIS	AXIA 2 S1	HEMCOL	TUBULAR STEEL	8	PAINTED	OTHER
46105180	A18 FROM A161 TO ALTHORPE	Keadby with Althorpe Parish	483887.46	410637.62	8	7007	00206224	01/04/1970 00:00	4	3	LESS THAN 30MPH	FRONT OF FOOTPATH	2000	SINGLE ARM	MID GREY	RIGID COLUMN	URBIS	AXIA 2 S1	HEMCOL	TUBULAR STEEL	8	PAINTED	OTHER
46105180	A18 FROM A161 TO ALTHORPE	Keadby with Althorpe Parish	483860.71	410623.18	9	7008	00206225	01/04/1970 00:00	4	3	LESS THAN 30MPH	BACK OF FOOTPATH	1500	SINGLE ARM	MID GREY	RIGID COLUMN	URBIS	AXIA 2 S1	HEMCOL	TUBULAR STEEL	8	PAINTED	OTHER
46105181	A18 FROM ALTHORPE TO GUNNESS	Keadby with Althorpe Parish	484181.69	410671.75	1	7000	00206265	28/10/2022 00:00	4	3	LESS THAN 30MPH	VERGE	1000	SINGLE ARM	NOT APPLICABLE	RIGID COLUMN	URBIS	AXIA 2 S1	MALLATITE	TUBULAR STEEL	8	GALVANISED	TUBULAR
46105181	A18 FROM ALTHORPE TO GUNNESS	Keadby with Althorpe Parish	484214.61	410712.61	1	7010	00206275	01/04/1987 00:00	4	3	NOT ON A ROAD	OTHER	0	NOT APPLICA	NOT APPLICABLE	WALL MOUNTED	APOLLO	CAESAR SQUARE	WALL MOUN	NOT APPLICABLE	3	NOT APPLICABI	Not Applicable
46105181	A18 FROM ALTHORPE TO GUNNESS	Keadby with Althorpe Parish	484144.73	410667.38	10	7019	00206284	01/04/1987 00:00	4	3	NOT ON A ROAD	OTHER	0	NOT APPLICA	NOT APPLICABLE	WALL MOUNTED	APOLLO	CAESAR SQUARE	WALL MOUN	NOT APPLICABLE	3	NOT APPLICABI	Not Applicable
46105181	A18 FROM ALTHORPE TO GUNNESS	Keadby with Althorpe Parish	484030.49	410649.39	10	7009	00206274	01/04/1987 00:00	4	3	LESS THAN 30MPH	OTHER	300	SINGLE ARM	MID GREY	RIGID COLUMN	URBIS	AXIA 2 S1	OTHER	TUBULAR STEEL	5	PAINTED	OTHER
46105181	A18 FROM ALTHORPE TO GUNNESS	Keadby with Althorpe Parish	484135.21	410665.86	11	7020	00206285	01/04/1987 00:00	4	3	NOT ON A ROAD	OTHER	0	NOT APPLICA	NOT APPLICABLE	WALL MOUNTED	APOLLO	CAESAR SQUARE	WALL MOUN	NOT APPLICABLE	3	NOT APPLICABI	Not Applicable
46105181	A18 FROM ALTHORPE TO GUNNESS	Keadby with Althorpe Parish	484125.13	410664.37	12	7021	00206286	01/04/1987 00:00	4	3	NOT ON A ROAD	OTHER	0	NOT APPLICA	NOT APPLICABLE	WALL MOUNTED	APOLLO	CAESAR SQUARE	WALL MOUN	NOT APPLICABLE	3	NOT APPLICABI	Not Applicable
46105181	A18 FROM ALTHORPE TO GUNNESS	Keadby with Althorpe Parish	484115.79	410663.16	13	7022	00206287	01/04/1987 00:00	4	3	NOT ON A ROAD	OTHER	0	NOT APPLICA	NOT APPLICABLE	WALL MOUNTED	APOLLO	CAESAR SQUARE	WALL MOUN	NOT APPLICABLE	3	NOT APPLICABI	Not Applicable
46105181	A18 FROM ALTHORPE TO GUNNESS	Keadby with Althorpe Parish	484106.36	410661.46	14	7023	00206288	01/04/1987 00:00	4	3	NOT ON A ROAD	OTHER	0	NOT APPLICA	NOT APPLICABLE	WALL MOUNTED	APOLLO	CAESAR SQUARE	WALL MOUN	NOT APPLICABLE	3	NOT APPLICABI	Not Applicable
46105181	A18 FROM ALTHORPE TO GUNNESS	Keadby with Althorpe Parish	484096.46	410659.97	15	7024	00206289	01/04/1987 00:00	4	3	NOT ON A ROAD	OTHER	0	NOT APPLICA	NOT APPLICABLE	WALL MOUNTED	APOLLO	CAESAR SQUARE	WALL MOUN	NOT APPLICABLE	3	NOT APPLICABI	Not Applicable
46105181	A18 FROM ALTHORPE TO GUNNESS	Keadby with Althorpe Parish	484086.7	410658.41	16	7025	00206290	01/04/1987 00:00	4	3	NOT ON A ROAD	OTHER	0	NOT APPLICA	NOT APPLICABLE	WALL MOUNTED	APOLLO	CAESAR SQUARE	WALL MOUN	NOT APPLICABLE	3	NOT APPLICABI	Not Applicable
46105181	A18 FROM ALTHORPE TO GUNNESS	Keadby with Althorpe Parish	484077.7	410657.04	17	7026	00206291	01/04/1987 00:00	4	3	NOT ON A ROAD	OTHER	0	NOT APPLICA	NOT APPLICABLE	WALL MOUNTED	APOLLO	CAESAR SQUARE	WALL MOUN	NOT APPLICABLE	3	NOT APPLICABI	Not Applicable
46105181	A18 FROM ALTHORPE TO GUNNESS	Keadby with Althorpe Parish	484068.84	410655.63	18	7027	00206292	01/04/1987 00:00	4	3	NOT ON A ROAD	OTHER	0	NOT APPLICA	NOT APPLICABLE	WALL MOUNTED	APOLLO	CAESAR SQUARE	WALL MOUN	NOT APPLICABLE	3	NOT APPLICABI	Not Applicable
46105181	A18 FROM ALTHORPE TO GUNNESS	Keadby with Althorpe Parish	484057.91	410654.02	19	7028	00206293	01/04/1987 00:00	4	3	NOT ON A ROAD	OTHER	0	NOT APPLICA	NOT APPLICABLE	WALL MOUNTED	APOLLO	CAESAR SQUARE	WALL MOUN	NOT APPLICABLE	3	NOT APPLICABI	Not Applicable
46105181	A18 FROM ALTHORPE TO GUNNESS	Keadby with Althorpe Parish	484208.42	410705.33	2	7011	00206276	01/04/1987 00:00	4	3	NOT ON A ROAD	OTHER	0	NOT APPLICA	NOT APPLICABLE	WALL MOUNTED	APOLLO	CAESAR SQUARE	WALL MOUN	NOT APPLICABLE	3	NOT APPLICABI	Not Applicable
46105181	A18 FROM ALTHORPE TO GUNNESS	Keadby with Althorpe Parish	484171.46	410669.87	2	7001	00206266	01/04/1987 00:00	4	3	LESS THAN 30MPH	OTHER	300	SINGLE ARM	NOT APPLICABLE	WALL MOUNTED	URBIS	AXIA 2 S1	WALL MOUN	NOT APPLICABLE	5	NOT APPLICABI	Not Applicable
46105181	A18 FROM ALTHORPE TO GUNNESS	Keadby with Althorpe Parish	484048.35	410652.74	20	7029	00206294

46105300	ACCESS ROAD T43	Scunthorpe	488972.77	411355.31	21H	7000	00206441	01/04/1993 00:00	4	4	LESS THAN 30MPH	BACK OF FOOTPATH	300	SINGLE ARM	NOT APPLICABLE	RIGID COLUMN	URBIS	AXIA 2 S1	PETITJEAN	SHEET STEEL	6	GALVANISED	DAER
46105301	ACCESS ROAD T44	Scunthorpe	489132.19	411393.67	29H	7000	00206443	01/04/1993 00:00	4	4	LESS THAN 30MPH	BACK OF FOOTPATH	300	SINGLE ARM	NOT APPLICABLE	RIGID COLUMN	URBIS	AXIA 2 S1	PETITJEAN	SHEET STEEL	6	GALVANISED	DAER
46105301	ACCESS ROAD T44	Scunthorpe	489138.68	411355.5	30H	7001	00206444	01/04/1993 00:00	4	4	LESS THAN 30MPH	BACK OF FOOTPATH	300	SINGLE ARM	NOT APPLICABLE	RIGID COLUMN	URBIS	AXIA 2 S1	PETITJEAN	SHEET STEEL	6	GALVANISED	DAER
46105303	ACCESS ROAD T46	Scunthorpe	489122.13	411466.63	28	7000	00206445	01/04/1993 00:00	4	4	LESS THAN 30MPH	BACK OF FOOTPATH	300	SINGLE ARM	NOT APPLICABLE	RIGID COLUMN	URBIS	AXIA 2 S1	PETITJEAN	SHEET STEEL	6	GALVANISED	DAER
46105304	ACCESS ROAD T47	Scunthorpe	489046	411451	26	7001	04200248	01/04/1993 00:00	4	4	LESS THAN 30MPH	BACK OF FOOTPATH	0	POST TOP	NOT APPLICABLE	RIGID COLUMN	URBIS	AXIA 2 S1	MALLATITE	TUBULAR STEEL	6	GALVANISED	TUBULAR
46105304	ACCESS ROAD T47	Scunthorpe	489080.17	411456.75	27	7000	00206446	01/04/1993 00:00	4	4	LESS THAN 30MPH	BACK OF FOOTPATH	0	POST TOP	NOT APPLICABLE	RIGID COLUMN	URBIS	AXIA 2 S1	PETITJEAN	SHEET STEEL	6	GALVANISED	DAER
46105306	ACCESS ROAD T49	Scunthorpe	489026.37	411516.68	74	7000	00206447	21/01/2022 00:00	4	4	LESS THAN 30MPH	BACK OF FOOTPATH	0	POST TOP	NOT APPLICABLE	RIGID COLUMN	URBIS	AXIA 2 S1	MALLATITE	TUBULAR STEEL	6	GALVANISED	TUBULAR
46105306	ACCESS ROAD T49	Scunthorpe	489066.78	411518.64	75	7001	00206448	01/04/1993 00:00	4	4	LESS THAN 30MPH	BACK OF FOOTPATH	300	SINGLE ARM	NOT APPLICABLE	RIGID COLUMN	URBIS	AXIA 2 S1	PETITJEAN	SHEET STEEL	6	GALVANISED	DAER
46105306	ACCESS ROAD T49	Scunthorpe	489108.43	411525.28	76	7002	00206449	01/04/1993 00:00	4	4	LESS THAN 30MPH	BACK OF FOOTPATH	300	SINGLE ARM	NOT APPLICABLE	RIGID COLUMN	URBIS	AXIA 2 S1	PETITJEAN	SHEET STEEL	6	GALVANISED	DAER
46105308	ACCESS ROAD T51	Scunthorpe	488911.09	411255.36	4I	7000	00206451	01/04/1993 00:00	6	3	LESS THAN 30MPH	BACK OF FOOTPATH	300	SINGLE ARM	NOT APPLICABLE	RIGID COLUMN	URBIS	AXIA 2 S1	PETITJEAN	SHEET STEEL	6	GALVANISED	DAER
46105309	ACCESS ROAD T52	Scunthorpe	488922.09	411214.69	5I	7000	00206452	01/04/1993 00:00	6	3	LESS THAN 30MPH	BACK OF FOOTPATH	300	SINGLE ARM	NOT APPLICABLE	RIGID COLUMN	URBIS	AXIA 2 S1	PETITJEAN	SHEET STEEL	6	GALVANISED	DAER
46105311	ACCESS ROAD T54	Scunthorpe	488898.37	411206.42	7	7000	00206453	01/04/1993 00:00	6	3	LESS THAN 30MPH	BACK OF FOOTPATH	300	SINGLE ARM	NOT APPLICABLE	RIGID COLUMN	URBIS	AXIA 2 S1	PETITJEAN	SHEET STEEL	6	GALVANISED	DAER
46105312	ACCESS ROAD T55	Scunthorpe	488992.77	411269.71	3	7000	00206454	01/04/1993 00:00	6	3	LESS THAN 30MPH	BACK OF FOOTPATH	300	SINGLE ARM	NOT APPLICABLE	RIGID COLUMN	URBIS	AXIA 2 S1	PETITJEAN	SHEET STEEL	6	GALVANISED	DAER
46105313	ACCESS ROAD T56	Scunthorpe	488995.29	411221.7	8I	7000	00206455	01/04/1993 00:00	6	3	LESS THAN 30MPH	BACK OF FOOTPATH	300	SINGLE ARM	NOT APPLICABLE	RIGID COLUMN	URBIS	AXIA 2 S1	PETITJEAN	SHEET STEEL	6	GALVANISED	DAER
46105317	ACCESS ROAD T60	Scunthorpe	488919.23	411129.57	11	7001	00206457	01/04/1993 00:00	6	3	LESS THAN 30MPH	BACK OF FOOTPATH	300	SINGLE ARM	NOT APPLICABLE	RIGID COLUMN	URBIS	AXIA 2 S1	PETITJEAN	SHEET STEEL	6	GALVANISED	DAER
46105317	ACCESS ROAD T60	Scunthorpe	489002.27	411145.42	12	7000	00206456	01/04/1993 00:00	6	3	LESS THAN 30MPH	BACK OF FOOTPATH	300	SINGLE ARM	NOT APPLICABLE	RIGID COLUMN	URBIS	AXIA 2 S1	PETITJEAN	SHEET STEEL	6	GALVANISED	DAER
46105318	ACCESS ROAD T61	Scunthorpe	489005.07	411095.71	13	7000	00206458	01/04/1993 00:00	6	3	LESS THAN 30MPH	BACK OF FOOTPATH	300	SINGLE ARM	NOT APPLICABLE	RIGID COLUMN	URBIS	AXIA 2 S1	PETITJEAN	SHEET STEEL	6	GALVANISED	DAER
46105320	ACCESS ROAD T63	Scunthorpe	489071.57	411233.58	9FP	7000	00206459	01/04/1993 00:00	6	3	LESS THAN 30MPH	BACK OF FOOTPATH	300	SINGLE ARM	NOT APPLICABLE	RIGID COLUMN	URBIS	AXIA 2 S1	PETITJEAN	SHEET STEEL	6	GALVANISED	DAER
46105322	ACCESS ROAD T65	Scunthorpe	489078.32	411108.31	15	7000	00206460	01/04/1993 00:00	6	3	LESS THAN 30MPH	BACK OF FOOTPATH	300	SINGLE ARM	NOT APPLICABLE	RIGID COLUMN	URBIS	AXIA 2 S1	PETITJEAN	SHEET STEEL	6	GALVANISED	DAER
46105323	ACCESS ROAD T66	Scunthorpe	489067.01	411269.41	2FP	7000	00206461	01/04/1993 00:00	6	3	LESS THAN 30MPH	BACK OF FOOTPATH	300	SINGLE ARM	NOT APPLICABLE	RIGID COLUMN	URBIS	AXIA 2 S1	PETITJEAN	SHEET STEEL	6	GALVANISED	DAER
46105325	ACCESS ROAD T68	Scunthorpe	489145.35	411245.57	10	7001	00206463	01/04/2001 00:00	6	3	LESS THAN 30MPH	BACK OF FOOTPATH	0	POST TOP	NOT APPLICABLE	RIGID COLUMN	URBIS	AXIA 2 S1	MALLATITE	TUBULAR STEEL	6	GALVANISED	STEPPED TUBULAR
46105325	ACCESS ROAD T68	Scunthorpe	489136.05	411275.69	1I	7000	00206462	01/04/1993 00:00	6	3	LESS THAN 30MPH	FRONT OF FOOTPATH	300	SINGLE ARM	NOT APPLICABLE	RIGID COLUMN	URBIS	AXIA 2 S1	PETITJEAN	SHEET STEEL	6	GALVANISED	DAER
46105326	ACCESS ROAD T69	Scunthorpe	489073.46	411152.32	14I	7001	00206465	01/04/1993 00:00	6	3	LESS THAN 30MPH	BACK OF FOOTPATH	300	SINGLE ARM	NOT APPLICABLE	RIGID COLUMN	URBIS	AXIA 2 S1	PETITJEAN	SHEET STEEL	6	GALVANISED	DAER
46105326	ACCESS ROAD T69	Scunthorpe	489125.23	411163.43	19I	7000	00206464	15/10/2024 00:00	6	3	LESS THAN 30MPH	BACK OF FOOTPATH	300	SINGLE ARM	NOT APPLICABLE	RIGID COLUMN	URBIS	AXIA 2 S1	MALLATITE	TUBULAR STEEL	6	GALVANISED	TUBULAR
46105327	ACCESS ROAD T70	Scunthorpe	489147.78	411167.2	16I	7000	00206466	01/04/1993 00:00	6	3	LESS THAN 30MPH	BACK OF FOOTPATH	300	SINGLE ARM	NOT APPLICABLE	RIGID COLUMN	URBIS	AXIA 2 S1	PETITJEAN	SHEET STEEL	6	GALVANISED	DAER
46105327	ACCESS ROAD T70	Scunthorpe	489153.37	411114.28	17I	7001	00206467	01/04/1993 00:00	6	3	LESS THAN 30MPH	BACK OF FOOTPATH	300	SINGLE ARM	NOT APPLICABLE	RIGID COLUMN	URBIS	AXIA 2 S1	PETITJEAN	SHEET STEEL	6	GALVANISED	DAER
46105327	ACCESS ROAD T70	Scunthorpe	489153.02	411182.37	18I	7002	00206468	01/04/1993 00:00	6	3	LESS THAN 30MPH	BACK OF FOOTPATH	300	SINGLE ARM	NOT APPLICABLE	RIGID COLUMN	URBIS	AXIA 2 S1	PETITJEAN	SHEET STEEL	6	GALVANISED	DAER
46105328	ACCESS ROAD T71	Scunthorpe	489088.36	412133.65	162	7000	00206469	26/03/2020 00:00	4	4	LESS THAN 30MPH	BACK OF FOOTPATH	0	POST TOP	NOT APPLICABLE	RIGID COLUMN	URBIS	AXIA 2 S1	MALLATITE	TUBULAR STEEL	6	GALVANISED	TUBULAR
46105328	ACCESS ROAD T71	Scunthorpe	489098.22	412073.75	163	7001	00206470	01/04/1993 00:00	4	4	LESS THAN 30MPH	BACK OF FOOTPATH	300	SINGLE ARM	NOT APPLICABLE	RIGID COLUMN	URBIS	AXIA 2 S1	PETITJEAN	SHEET STEEL	6	GALVANISED	DAER
46105329	ACCESS ROAD T72	Scunthorpe	489191	412070.54	172	7000	00206471	01/04/2001 00:00	4	4	LESS THAN 30MPH	BACK OF FOOTPATH	0	POST TOP	NOT APPLICABLE	RIGID COLUMN	URBIS	AXIA 2 S1	MALLATITE	TUBULAR STEEL	6	GALVANISED	STEPPED TUBULAR
46105330	ACCESS ROAD T73	Scunthorpe	489136.56	412082.59	164H	7004	00206476	01/04/1993 00:00	4	4	LESS THAN 30MPH	BACK OF FOOTPATH	300	SINGLE ARM	NOT APPLICABLE	RIGID COLUMN	URBIS	AXIA 2 S1	PETITJEAN	SHEET STEEL	6	GALVANISED	DAER
46105330	ACCESS ROAD T73	Scunthorpe	489191.57	412087.9	165H	7003	00206475	01/04/1993 00:00	4	4	LESS THAN 30MPH	BACK OF FOOTPATH	300	SINGLE ARM	NOT APPLICABLE	RIGID COLUMN	URBIS	AXIA 2 S1	PETITJEAN	SHEET STEEL	6	GALVANISED	DAER
46105330	ACCESS ROAD T73	Scunthorpe	489227.2	412094.38	166H	7002	00206474	01/04/1993 00:00	4	4	LESS THAN 30MPH	BACK OF FOOTPATH	300	SINGLE ARM	NOT APPLICABLE	RIGID COLUMN	URBIS	AXIA 2 S1	PETITJEAN	SHEET STEEL	6	GALVANISED	DAER
46105330	ACCESS ROAD T73	Scunthorpe	489251.42	412098.68	167H	7001	00206473	01/04/1993 00:00	4	4	LESS THAN 30MPH	BACK OF FOOTPATH	300	SINGLE ARM	NOT APPLICABLE	RIGID COLUMN	URBIS	AXIA 2 S1	PETITJEAN	SHEET STEEL	6	GALVANISED	DAER
46105330	ACCESS ROAD T73	Scunthorpe	489266.01	412104.98	168H	7000	00206472	01/04/1993 00:00	4	4	LESS THAN 30MPH	BACK OF FOOTPATH	300	SINGLE ARM	NOT APPLICABLE	RIGID COLUMN	URBIS	AXIA 2 S1	PETITJEAN	SHEET STEEL	6	GALVANISED	DAER
46105332	ACCESS ROAD T75	Scunthorpe	489329.17	412118.44	169H	7000	00206477	01/04/1993 00:00	4	4	LESS THAN 30MPH	BACK OF FOOTPATH	300	SINGLE ARM	NOT APPLICABLE	RIGID COLUMN	URBIS	AXIA 2 S1	PETITJEAN	SHEET STEEL	6	GALVANISED	DAER
46105332	ACCESS ROAD T75	Scunthorpe	489318.6	412168.69	170H	7001	00206478	01/04/1993 00:00	4	4	LESS THAN 30MPH	BACK OF FOOTPATH	300	SINGLE ARM	NOT APPLICABLE	RIGID COLUMN	URBIS	AXIA 2 S1	PETITJEAN	SHEET STEEL	6	GALVANISED	DAER
46105333	ACCESS ROAD T76	Scunthorpe	489344.14	412056.83	171H	7000	00206479	01/04/1993 00:00	4	4	LESS THAN 30MPH	BACK OF FOOTPATH	300	SINGLE ARM	NOT APPLICABLE	RIGID COLUMN	URBIS	AXIA 2 S1	PETITJEAN	SHEET STEEL	6	GALVANISED	DAER
46105335	ACCESS ROAD T78	Scunthorpe	489280.92	411982.22	152H	7000	00206480	01/04/2001 00:00	4	4	LESS THAN 30MPH	BACK OF FOOTPATH	0	POST TOP	NOT APPLICABLE	RIGID COLUMN	URBIS	AXIA 2 S1	MALLATITE	TUBULAR STEEL	6	GALVANISED	STEPPED TUBULAR
46105336	ACCESS ROAD T79	Scunthorpe	489253.23	411976.52	151H	7000	00206481	01/04/2001 00:00	4	4	LESS THAN 30MPH	BACK OF FOOTPATH	0	POST TOP	NOT APPLICABLE	RIGID COLUMN	URBIS	AXIA 2 S1	MALLATITE	TUBULAR STEEL	6	GALVANISED	STEPPED TUBULAR
46105337	ACCESS ROAD T80	Scunthorpe	489263.41	412002.98	153H	7000	00206483	01/04/1993 00:00	4	4	LESS THAN 30MPH	BACK OF FOOTPATH	300	SINGLE ARM	NOT APPLICABLE	RIGID COLUMN	URBIS	AXIA 2 S1	PETITJEAN	SHEET STEEL	6	GALVANISED	DAER
46105338	ACCESS ROAD T81	Scunthorpe	489261.56	412035.99	154	7000	00206482	01/04/1993 00:00	4	4	LESS THAN 30MPH	BACK OF FOOTPATH	300	SINGLE ARM	NOT APPLICABLE	RIGID COLUMN	URBIS	AXIA 2 S1	PETITJEAN	SHEET STEEL	6	GALVANISED	DAER
46105339	ACCESS ROAD T82	Scunthorpe	489217.78	412023.92	155	7001	00206485	01/04/1993 00:00	4	4	LESS THAN 30MPH	BACK OF FOOTPATH	800	SINGLE ARM	NOT APPLICABLE	RIGID COLUMN	URBIS	AXIA 2 S1	PETITJEAN	SHEET STEEL	6	GALVANISED	DAER
46105339	ACCESS ROAD T82	Scunthorpe	489193.67	412019.38	156	7002	00206486	01/04/1993 00:00	4	4	LESS THAN 30MPH	BACK OF FOOTPATH	800	SINGLE ARM	NOT APPLICABLE	RIGID COLUMN	URBIS	AXIA 2 S1	PETITJEAN	SHEET STEEL	6	GALVANISED	DAER
46105339	ACCESS ROAD T82	Scunthorpe	489162.15	412013.32	158H	7000	00206484	01/04/1993 00:00	4	4	LESS THAN 30MPH	BACK OF FOOTPATH	300	SINGLE ARM	NOT APPLICABLE	RIGID COLUMN	URBIS	AXIA 2 S1	PETITJEAN	SHEET STEEL	6	GALVANISED	DAER
46105341	ACCESS ROAD T84	Scunthorpe	489197.4	411971.43	157H	7000	00206487	01/04/2001 00:00	4	4	LESS THAN 30MPH	BACK OF FOOTPATH	0	POST TOP	NOT APPLICABLE	RIGID COLUMN	URBIS	AXIA 2 S1	MALLATITE	TUBULAR STEEL	6	GALVANISED	STEPPED TUBULAR
46105342	ACCESS ROAD T85	Scunthorpe	489226.36	411811.15	138H	7000	00206488	01/04/2001 00:00	4	4	LESS THAN 30MPH	BACK OF FOOTPATH	0	POST TOP	NOT APPLICABLE	RIGID COLUMN	URBIS	AXIA 2 S1	MALLATITE	TUBULAR STEEL	6	GALVANISED	STEPPED TUBULAR
46105342	ACCESS ROAD T85	Scunthorpe	489221.73	411834.82	139	7004	00206492	01/04/2001 00:00	4	4	LESS THAN 30MPH	BACK OF FOOTPATH	0	POST TOP	NOT APPLICABLE	RIGID COLUMN	URBIS	AXIA 2 S1	MALLATITE	TUBULAR STEEL	6	GALVANISED	STEPPED TUBULAR
46105342	ACCESS ROAD T85	Scunthorpe	489215.31	411870.51	140H	7003	00206491	01/04/2001 00:00	4	4	LESS THAN 30MPH	BACK OF FOOTPATH	0	POST TOP	NOT APPLICABLE	RIGID COLUMN	URBIS	AXIA 2 S1	MALLATITE	TUBULAR STEEL	6	GALVANISED	STEPPED TUBULAR
46105342	ACCESS ROAD T85	Scunthorpe	489210.29	411903.63	141HA	7002	00206490	10/11/2023 00:00	4	4	LESS THAN 30MPH	BACK OF FOOTPATH	0	POST TOP	NOT APPLICABLE	RIGID COLUMN	URBIS	AXIA 2 S1	MALLATITE	TUBULAR STEEL	6	GALVANISED	MALLATITE
46105342	ACCESS ROAD T85	Scunthorpe	489219.65	411910.01	142	7001	00206489	01/04/2001 00:00	4	4	LESS THAN 30MPH	BACK OF FOOTPATH	0	POST TOP	NOT APPLICABLE	RIGID COLUMN	URBIS	AXIA 2 S1	MALLATITE	TUBULAR STEEL	6	GALVANISED	STEPPED TUBULAR
46105343	ACCESS ROAD T86	Scunthorpe	489252.46	411681.07	134H	7000	00206493	01/04/2001 00:00	4	4	LESS THAN 30MPH	BACK OF FOOTPATH	0	POST TOP	NOT APPLICABLE	RIGID COLUMN	URBIS	AXIA 2 S1	MALLATITE	TUBULAR STEEL	6	GALVANISED	STEPPED TUBULAR
46105343	ACCESS ROAD T86	Scunthorpe	489248.12	411715.21	135	7003	00206503	01/04/2001 00:00	4	4	LESS THAN 30MPH	BACK OF FOOTPATH	0	POST TOP	NOT APPLICABLE	RIGID COLUMN	URBIS	AXIA 2 S1	MALLATITE	TUBULAR STEEL	6	GALVANISED	STEPPED TUBULAR
46105343	ACCESS ROAD T86	Scunthorpe	489241.22	411750.5	136	7001	00206494	01/04/2001 00:00	4	4	LESS THAN 30MPH	BACK OF FOOTPATH	0	POST TOP	NOT APPLICABLE	RIGID COLUMN	URBIS	AXIA 2 S1	MALLATITE	TUBULAR STEEL	6	GALVANISED	STEPPED TUBULAR
46105343	ACCESS ROAD T86	Scunthorpe	489238.65	411768.77	137	7002	00206495	01/04/2001 00:00	4	4	LESS THAN 30MPH	BACK OF FOOTPATH	0	POST TOP	NOT APPLICABLE	RIGID COLUMN	URBIS	AXIA 2 S1	MALLATITE	TUBULAR STEEL	6	GALVANISED	STEPPED TUBULAR
46105344	ACCESS ROAD T87	Scunthorpe	489169.86	411669.6	143H	7000	00206496	01/04/2001 00:00	4	4	LESS THAN 30MPH	BACK OF FOOTPATH	0	POST TOP	NOT APPLICABLE	RIGID COLUMN	URBIS	AXIA 2 S1	MALLATITE	TUBULAR STEEL	6	GALVANISED	STEPPED TUBULAR
46105344	ACCESS ROAD T87	Scunthorpe	489165.41	411701.75	144H	7001	00206497	01/04/2001 00:00	4	4	LESS THAN 30MPH	BACK OF FOOTPATH	0	POST TOP	NOT APPLICABLE	RIGID COLUMN	URBIS	AXIA 2 S1	MALLATITE	TUBULAR STEEL	6	GALVANISED	STEPPED TUBULAR
46105344	ACCESS ROAD T87	Scunthorpe	489158.42	411736.47	145H	7002	00206498	01/04/2001 00:00	4	4	LESS THAN 30MPH	BACK OF FOOTPATH	0	POST TOP	NOT APPLICABLE	RIGID COLUMN	URBIS	AXIA 2 S1	MALLATITE	TUBULAR STEEL	6	GALVANISED	STEPPED TUBULAR
46105344	ACCESS ROAD T87	Scunthorpe	489159.97	411754.22	146H	7003	00206499	01/04/2001 00:00	4	4	LESS THAN 30MPH	BACK OF FOOTPATH	0	POST TOP	NOT APPLICABLE	RIGID COLUMN	URBIS	AXIA 2 S1	MALLATITE	TUBULAR STEEL	6	GALVANISED	STEPPED TUBULAR
46105345	ACCESS ROAD T88	Scunthorpe	489150.14	411799.71	147H	7002	00206502	01/04/2001 00:00	4	4	LESS THAN 30MPH	BACK OF FOOTPATH	0	POST TOP	NOT APPLICABLE	RIGID COLUMN	URBIS	AXIA 2 S1	MALLATITE	TUBULAR STEEL	6	GALVANISED	STEPPED TUBULAR
46105345	ACCESS ROAD T88	Scunthorpe	489143.26	411848.51	148	7004	00206504	01/04/2001 00:00	4	4	LESS THAN 30MPH	BACK OF FOOTPATH	0	POST TOP	NOT APPLICABLE	RIGID COLUMN	URBIS	AXIA 2 S1	MALLATITE	TUBULAR STEEL	6	GALVANISED	STEPPED TUBULAR
46105345	ACCESS ROAD T88	Scunthorpe	489132	411880.95	149H	7001	00206501	01/04/2001 00:00	4	4	LESS THAN 30MPH	BACK OF FOOTPATH	0	POST TOP	NOT APPLICABLE	RIGID COLUMN	URBIS	AXIA 2 S1	MALLATITE	TUBULAR STEEL	6	GALVANISED	STEPPED TUBULAR
46105345	ACCESS ROAD T88	Scunthorpe	489131.46	411908.53	150H	7000	00206500	01/04/2001 00:00	4	4	LESS THAN 30MPH	BACK OF FOOTPATH	0	POST TOP	NOT APPLICABLE	RIGID COLUMN	URBIS	AXIA 2 S1	MALLATITE	TUBULAR STEEL	6	GALVANISED	STEPPED TUBULAR
46105346	ACCESS ROAD T89	Scunthorpe	489123.87	411957.79	161H	7000	00206505	01/04/2001 00:00	4	4	LESS THAN 30MPH	BACK OF FOOTPATH	0	POST TOP	NOT APPLICABLE	RIGID COLUMN	URBIS	AXIA 2 S1	MALLATITE	TUBULAR STEEL	6	GALVANISED	STEPPED TUBULAR
46105348	ACCESS ROAD T91	Scunthorpe	489142.69	412006.44	159	7001	00206507	01/04/2002 00:00	4	4	LESS THAN 30MPH	BACK OF FOOTPATH	0	POST TOP	NOT APPLICABLE	RIGID COLUMN	URBIS	AXIA 2 S1	T AND L	TUBULAR STEEL	6	GALVANISED	STEPPED TUBULAR
46105348	ACCESS ROAD T91	Scunthorpe	489114.59	412005.28	160	7000	00206506	01/04/1993 00:00	4	4	LESS THAN 30MPH	BACK OF FOOTPATH	300	SINGLE ARM	NOT APPLICABLE	RIGID COLUMN	URBIS	AXIA 2 S1	PETITJEAN	SHEET STEEL	6	GALVANISED	DAER
46105349	ACCESS ROAD T92	Scunthorpe	489306.55	411842.59	130	7003	00206511	01/04/2001 00:00	4	4	LESS THAN 30MPH	BACK OF FOOTPATH	0	POST TOP	NOT APPLICABLE	RIGID COLUMN	URBIS	AXIA 2 S1	MALLATITE	TUBULAR STEEL	6	GALVANISED	STEPPED TUBULAR
46105349	ACCESS ROAD T92	Scunthorpe	489301.52	411870.48	131	7002	00206510	01/04/2001 00:00	4	4	LESS THAN 30MPH	BACK OF FOOTPATH	0	POST TOP	NOT APPLICABLE	RIGID COLUMN	URBIS	AXIA 2 S1	MALLATITE	TUBULAR STEEL	6	GALVANISED	STEPPED TUBULAR
46105349	ACCESS ROAD T92	Scunthorpe	489289.56	411908.45	132	7001	00206509	01/04/2001 00:00	4	4	LESS THAN 30MPH	BACK OF FOOTPATH	0	POST TOP	NOT APPLICABLE	RIGID COLUMN	URBIS	AXIA 2 S1	MALLATITE	TUBULAR STEEL	6	GALVANISED	STEPPED TUBULAR
46105349	ACCESS ROAD T92	Scunthorpe	489288.73	411938.27	133	7000	00206508	01/04/2001 00:00	4	4	LESS THAN 30MPH	BACK OF FOOTPATH	0	POST TOP	NOT APPLICABLE	RIGID COLUMN	URBIS	AXIA 2 S1	MALLATITE	TUBULAR STEEL	6	GALVANISED	STEPPED TUBULAR
46105350	ACCESS ROAD T93	Scunthorpe	489332.75	411693.64	126	7002	00206514	01/04/2001 00:00	4	4	LESS THAN 30MPH	BACK OF FOOTPATH	0	POST TOP	NOT APPLICABLE	RIGID COLUMN	URBIS	AXIA 2 S1	MALLATITE	TUBULAR STEEL	6	GALVANISED	STEPPED TUBULAR
46105350	ACCESS ROAD T93	Scunthorpe	489326.93	411728.7	127	7003	00206515	01/04/2001 00:00	4	4	LESS THAN 30MPH	BACK OF FOOTPATH	0	POST TOP	NOT APPLICABLE	RIGID COLUMN	URBIS	AXIA 2 S1	MALLATITE	TUBULAR STEEL	6	GALVANISED	STEPPED TUBULAR
46105350	ACCESS ROAD T93	Scunthorpe	489314.39	411765.08	128H	7000	00206512	01/04/2001 00:00	4	4	LESS THAN 30MPH	BACK OF FOOTPATH	0	POST TOP	NOT APPLICABLE	RIGID COLUMN	URBIS	AXIA 2 S1	MALLATITE	TUBULAR STEEL	6	GALVANISED	STEPPED TUBULAR
46105350	ACCESS ROAD T93	Scunthorpe	489310.01	411799.48	129H	7001	00206513	01/04/2001 00:00	4	4	LESS THAN 30MPH	BACK OF FOOTPATH	0	POST TOP	NOT APPLICABLE	RIGID COLUMN	URBIS	AXIA 2 S1	MALLATITE	TUBULAR STEEL	6	GALVANISED	STEPPED TUBULAR
46105351	ACCESS ROAD T94	Scunthorpe	489411.04	411701.93	120H	7003	00206519	01/04/2001 00:00	4	4	LESS THAN 30MPH	BACK OF FOOTPATH	0	POST TOP	NOT APPLICABLE	RIGID COLUMN	URBIS	AXIA 2 S1	MALLATITE	TUBULAR STEEL	6	GALVANISED	STEPPED TUBULAR
46105351	ACCESS ROAD T94	Scunthorpe	489405.1	411744.04	121H	7002	00206518	01/04/2001 00:00	4	4	LESS THAN 30MPH	BACK OF FOOTPATH	0	POST TOP	NOT APPLICABLE	RIGID COLUMN	URBIS	AXIA 2 S1	MALLATITE	TUBULAR STEEL	6	GALVANISED	STEPPED TUBULAR
46105351	ACCESS ROAD T94	Scunthorpe	489398.33	411782.11	122H	7001	00206517	01/04/2001 00:00	4	4	LESS THAN 30MPH	BACK OF FOOTPATH	0	POST TOP	NOT APPLICABLE	RIGID COLUMN	URBIS	AXIA 2 S1	MALLATITE	TUBULAR STEEL	6	GALVANISED	STEPPED TUBULAR
46105351	ACCESS ROAD T94	Scunthorpe	489391.13	411814.27	123H	7000	00206516	01/04/2001 00:00	4	4	LESS THAN 30MPH	BACK OF FOOTPATH	0	POST TOP	NOT APPLICABLE	RIGID COLUMN	URBIS	AXIA 2 S1	MALLATITE	TUBULAR STEEL	6	GALVANISED	STEPPED TUBULAR
46105352	ACCESS ROAD T95	Scunthorpe	489353.9	411860.38	125	7000	00206520	01/04/2001 00:00	4	4	LESS THAN 30MPH	BACK OF FOOTPATH	0	POST TOP	NOT APPLICABLE	RIGID COLUMN	URBIS	AXIA 2 S1	MALLATITE	TUBULAR STEEL	6	GALVANISED	STEPPED TUBULAR
46105353	ACCESS ROAD T96	Scunthorpe	489382.46	411865.01	124H	7000	00206521	01/04/2001 00:00	4	4	LESS THAN 30MPH	BACK OF FOOTPATH	0	POST TOP	NOT APPLICABLE	RIGID COLUMN	URBIS	AXIA 2 S1	MALLATITE	TUBULAR STEEL	6	GALVANISED	STEPPED TUBULAR
46105355	ACCESS ROAD T98	Scunthorpe	489480.07	411734.57	119	7000	00206522	01/04/2002 00:00	4	4	LESS THAN 30MPH	BACK OF FOOTPATH	0	POST TOP	NOT APPLICABLE	RIGID COLUMN	URBIS	AXIA 2 S1	PETITJEAN	TUBULAR STEEL	6	GALVANISED	STEPPED TUBULAR
46105356	ACCESS ROAD T99	Scunthorpe	489181.39	411627.4	115	7000	00206523	01/04/2005 00:00	4	4	LESS THAN 30MPH	BACK OF FOOTPATH	0	POST TOP	BLACK	BASE HINGED	URBIS	AXIA 2 S1	OTHER	TUBULAR STEEL	6	PAINTED	OTHER
46105357	ACCESS ROAD T100	Scunthorpe	489160.24	411605.97	114	7002	00206526	01/04/2005 00:00	4	4	LESS THAN 30MPH	BACK OF FOOTPATH	0	POST TOP	SILVER	RIGID COLUMN	URBIS	AXIA 2 S1	OTHER	TUBULAR STEEL	6	PAINTED	OTHER
46105357	ACCESS ROAD T100	Scunthorpe	489192.51	411613.19	116	7001	00206525	01/04/2005 00:00	4	4	LESS THAN 30MPH	BACK OF FOOTPATH	0	POST TOP	BLACK	RIGID COLUMN	URBIS	AXIA 2 S1	OTHER	TUBULAR STEEL	6	PAINTED	OTHER
46105357	ACCESS ROAD T100	Scunthorpe	489231.9	411620.02	117	7000	00206524	01/04/2005 00:00	4	4	LESS THAN 30MPH	BACK OF FOO

46105606	ACCESS ROADS IN WATERS EDGE COUNTRY PARK	Barton upon Humber Parish	502960.23	423359.46	11	7010	00206674	01/04/2006 00:00	5	2	LESS THAN 30MPH	VERGE	300	SINGLE ARM	MID GREY	RIGID COLUMN	WOODHOUSE	GEO	OTHER	TUBULAR ALUMIN	5	PAINTED	OTHER
46105606	ACCESS ROADS IN WATERS EDGE COUNTRY PARK	Barton upon Humber Parish	502956.89	423376.87	12	7011	00206675	01/04/2006 00:00	5	2	LESS THAN 30MPH	VERGE	300	SINGLE ARM	MID GREY	RIGID COLUMN	WOODHOUSE	GEO	OTHER	TUBULAR ALUMIN	5	PAINTED	OTHER
46105606	ACCESS ROADS IN WATERS EDGE COUNTRY PARK	Barton upon Humber Parish	502939.78	423361.91	13	7012	00206676	01/04/2006 00:00	5	2	LESS THAN 30MPH	BACK OF FOOTPATH	300	SINGLE ARM	MID GREY	RIGID COLUMN	WOODHOUSE	GEO	OTHER	TUBULAR ALUMIN	5	PAINTED	OTHER
46105606	ACCESS ROADS IN WATERS EDGE COUNTRY PARK	Barton upon Humber Parish	502941.06	423334.25	14	7013	00206677	01/04/2006 00:00	5	2	NOT ON A ROAD	BACK OF FOOTPATH	300	SINGLE ARM	MID GREY	RIGID COLUMN	WOODHOUSE	GEO	OTHER	TUBULAR ALUMIN	5	PAINTED	OTHER
46105606	ACCESS ROADS IN WATERS EDGE COUNTRY PARK	Barton upon Humber Parish	502945.89	423312.52	15	7014	00206678	01/04/2006 00:00	5	2	NOT ON A ROAD	BACK OF FOOTPATH	300	SINGLE ARM	MID GREY	RIGID COLUMN	WOODHOUSE	GEO	OTHER	TUBULAR ALUMIN	5	PAINTED	OTHER
46105606	ACCESS ROADS IN WATERS EDGE COUNTRY PARK	Barton upon Humber Parish	502956.88	423289.72	16	7015	00206679	01/04/2006 00:00	5	2	NOT ON A ROAD	BACK OF FOOTPATH	300	SINGLE ARM	MID GREY	RIGID COLUMN	WOODHOUSE	GEO	OTHER	TUBULAR ALUMIN	5	PAINTED	OTHER
46105606	ACCESS ROADS IN WATERS EDGE COUNTRY PARK	Barton upon Humber Parish	502969.35	423271.96	17	7016	00206680	01/04/2006 00:00	5	2	NOT ON A ROAD	BACK OF FOOTPATH	300	SINGLE ARM	MID GREY	RIGID COLUMN	WOODHOUSE	GEO	OTHER	TUBULAR ALUMIN	5	PAINTED	OTHER
46105606	ACCESS ROADS IN WATERS EDGE COUNTRY PARK	Barton upon Humber Parish	502991.28	423250.73	18	7017	00206681	01/04/2006 00:00	5	2	NOT ON A ROAD	BACK OF FOOTPATH	300	SINGLE ARM	MID GREY	RIGID COLUMN	WOODHOUSE	GEO	OTHER	TUBULAR ALUMIN	5	PAINTED	OTHER
46105606	ACCESS ROADS IN WATERS EDGE COUNTRY PARK	Barton upon Humber Parish	503011.16	423238.93	19	7018	00206682	01/04/2006 00:00	5	2	NOT ON A ROAD	BACK OF FOOTPATH	300	SINGLE ARM	MID GREY	RIGID COLUMN	WOODHOUSE	GEO	OTHER	TUBULAR ALUMIN	5	PAINTED	OTHER
46105606	ACCESS ROADS IN WATERS EDGE COUNTRY PARK	Barton upon Humber Parish	503055.77	423189.93	2	7001	00206665	01/04/2006 00:00	5	2	LESS THAN 30MPH	BACK OF FOOTPATH	1000	SINGLE ARM	NOT APPLICABLE	RIGID COLUMN	URBIS	AXIA 2 S1	PETITJEAN	SHEET STEEL	8	GALVANISED	THAMES
46105606	ACCESS ROADS IN WATERS EDGE COUNTRY PARK	Barton upon Humber Parish	503024	423205	20	7019	04200141	01/04/2006 00:00	5	2	LESS THAN 30MPH	VERGE	0	POST TOP	NOT APPLICABLE	RIGID COLUMN	HOLOPHANE	VMAX V1 L024	MALLATITE	TUBULAR STEEL	6	GALVANISED	TUBULAR
46105606	ACCESS ROADS IN WATERS EDGE COUNTRY PARK	Barton upon Humber Parish	503000	423204	21	7020	04200142	01/04/2006 00:00	5	2	LESS THAN 30MPH	VERGE	0	POST TOP	NOT APPLICABLE	RIGID COLUMN	HOLOPHANE	VMAX V1 L024	MALLATITE	TUBULAR STEEL	6	GALVANISED	TUBULAR
46105606	ACCESS ROADS IN WATERS EDGE COUNTRY PARK	Barton upon Humber Parish	502973	423215	22	7021	04200143	01/04/2006 00:00	5	2	LESS THAN 30MPH	VERGE	0	POST TOP	NOT APPLICABLE	RIGID COLUMN	URBIS	AXIA 2 S1	MALLATITE	TUBULAR STEEL	6	GALVANISED	TUBULAR
46105606	ACCESS ROADS IN WATERS EDGE COUNTRY PARK	Barton upon Humber Parish	502988	423236	23	7022	04200144	01/04/2006 00:00	5	2	LESS THAN 30MPH	BACK OF FOOTPATH	0	POST TOP	NOT APPLICABLE	MID HINGED	URBIS	AXIA 2 S1	VALMONT ST	SHEET STEEL	6	GALVANISED	LEVEN
46105606	ACCESS ROADS IN WATERS EDGE COUNTRY PARK	Barton upon Humber Parish	503060.14	423210.62	3	7002	00206666	01/04/2006 00:00	5	2	LESS THAN 30MPH	BACK OF FOOTPATH	1000	SINGLE ARM	NOT APPLICABLE	RIGID COLUMN	URBIS	AXIA 2 S1	PETITJEAN	SHEET STEEL	8	GALVANISED	THAMES
46105606	ACCESS ROADS IN WATERS EDGE COUNTRY PARK	Barton upon Humber Parish	503041.77	423225.91	4	7003	00206667	01/04/2006 00:00	5	2	LESS THAN 30MPH	BACK OF FOOTPATH	300	SINGLE ARM	MID GREY	RIGID COLUMN	WOODHOUSE	GEO	OTHER	TUBULAR ALUMIN	5	PAINTED	OTHER
46105606	ACCESS ROADS IN WATERS EDGE COUNTRY PARK	Barton upon Humber Parish	503024.17	423254.24	5	7004	00206668	01/04/2006 00:00	5	2	LESS THAN 30MPH	BACK OF FOOTPATH	300	SINGLE ARM	MID GREY	RIGID COLUMN	WOODHOUSE	GEO	OTHER	TUBULAR ALUMIN	5	PAINTED	OTHER
46105606	ACCESS ROADS IN WATERS EDGE COUNTRY PARK	Barton upon Humber Parish	502997.29	423278.25	6	7005	00206669	01/04/2006 00:00	5	2	LESS THAN 30MPH	BACK OF FOOTPATH	300	SINGLE ARM	MID GREY	RIGID COLUMN	WOODHOUSE	GEO	OTHER	TUBULAR ALUMIN	5	PAINTED	OTHER
46105606	ACCESS ROADS IN WATERS EDGE COUNTRY PARK	Barton upon Humber Parish	502982.47	423306.53	7	7006	00206670	01/04/2006 00:00	5	2	LESS THAN 30MPH	VERGE	300	SINGLE ARM	MID GREY	RIGID COLUMN	WOODHOUSE	GEO	OTHER	TUBULAR ALUMIN	5	PAINTED	OTHER
46105606	ACCESS ROADS IN WATERS EDGE COUNTRY PARK	Barton upon Humber Parish	502971.96	423325	8	7007	00206671	01/04/2006 00:00	5	2	LESS THAN 30MPH	VERGE	300	SINGLE ARM	MID GREY	RIGID COLUMN	WOODHOUSE	GEO	OTHER	TUBULAR ALUMIN	5	PAINTED	OTHER
46105606	ACCESS ROADS IN WATERS EDGE COUNTRY PARK	Barton upon Humber Parish	502978.23	423352.3	9	7008	00206672	01/04/2006 00:00	5	2	LESS THAN 30MPH	VERGE	300	SINGLE ARM	MID GREY	RIGID COLUMN	WOODHOUSE	GEO	OTHER	TUBULAR ALUMIN	5	PAINTED	OTHER
46105610	FOOTPATH BETWEEN MASON DRIVE AND ST DAVI	Bottesford Parish	488154.46	407218.22	1	7000	00193786	01/04/2001 00:00	3	1	LESS THAN 30MPH	BACK OF FOOTPATH	300	SINGLE ARM	NOT APPLICABLE	MID HINGED	URBIS	AXIA 2 S1	PETITJEAN	SHEET STEEL	5	GALVANISED	LEVEN
46105610	FOOTPATH BETWEEN MASON DRIVE AND ST DAVI	Bottesford Parish	488145.05	407241.61	2	7001	00193788	01/04/2001 00:00	3	1	LESS THAN 30MPH	BACK OF FOOTPATH	300	SINGLE ARM	NOT APPLICABLE	MID HINGED	URBIS	AXIA 2 S1	PETITJEAN	SHEET STEEL	5	GALVANISED	LEVEN
46105612	ACCESS ROAD BETWEEN GLANVILLE AVENUE AND	Scunthorpe	488835.05	409949.48	10E	7009	00198732	12/10/2020 00:00	5	4	LESS THAN 30MPH	BACK OF FOOTPATH	0	POST TOP	NOT APPLICABLE	RIGID COLUMN	URBIS	AXIA 2 S1	MALLATITE	TUBULAR STEEL	6	GALVANISED	TUBULAR
46105612	ACCESS ROAD BETWEEN GLANVILLE AVENUE AND	Scunthorpe	488799.1	409947.03	11E	7010	00198733	12/10/2020 00:00	5	4	LESS THAN 30MPH	BACK OF FOOTPATH	0	POST TOP	NOT APPLICABLE	RIGID COLUMN	URBIS	AXIA 2 S1	MALLATITE	TUBULAR STEEL	6	GALVANISED	TUBULAR
46105612	ACCESS ROAD BETWEEN GLANVILLE AVENUE AND	Scunthorpe	489100.15	409898.97	1E	7000	00198723	01/04/2002 00:00	5	4	LESS THAN 30MPH	BACK OF FOOTPATH	500	SINGLE ARM	NOT APPLICABLE	RIGID COLUMN	URBIS	AXIA 2 S1	PETITJEAN	SHEET STEEL	8	GALVANISED	THAMES
46105612	ACCESS ROAD BETWEEN GLANVILLE AVENUE AND	Scunthorpe	489097.66	409936.5	2E	7001	00198724	12/10/2020 00:00	5	4	LESS THAN 30MPH	BACK OF FOOTPATH	0	POST TOP	NOT APPLICABLE	RIGID COLUMN	URBIS	AXIA 2 S1	MALLATITE	TUBULAR STEEL	6	GALVANISED	TUBULAR
46105612	ACCESS ROAD BETWEEN GLANVILLE AVENUE AND	Scunthorpe	489097.4	409969.25	3E	7002	00198725	12/10/2020 00:00	5	4	LESS THAN 30MPH	BACK OF FOOTPATH	0	POST TOP	NOT APPLICABLE	RIGID COLUMN	URBIS	AXIA 2 S1	MALLATITE	TUBULAR STEEL	6	GALVANISED	TUBULAR
46105612	ACCESS ROAD BETWEEN GLANVILLE AVENUE AND	Scunthorpe	489061.86	409962.52	4E	7003	00198726	12/10/2020 00:00	5	4	LESS THAN 30MPH	BACK OF FOOTPATH	0	POST TOP	NOT APPLICABLE	RIGID COLUMN	URBIS	AXIA 2 S1	MALLATITE	TUBULAR STEEL	6	GALVANISED	TUBULAR
46105612	ACCESS ROAD BETWEEN GLANVILLE AVENUE AND	Scunthorpe	489023.18	409960.18	5E	7004	00198727	12/10/2020 00:00	5	4	LESS THAN 30MPH	BACK OF FOOTPATH	0	POST TOP	NOT APPLICABLE	RIGID COLUMN	URBIS	AXIA 2 S1	MALLATITE	TUBULAR STEEL	6	GALVANISED	TUBULAR
46105612	ACCESS ROAD BETWEEN GLANVILLE AVENUE AND	Scunthorpe	488985.43	409958.06	6E	7005	00198728	01/04/2012 00:00	5	4	LESS THAN 30MPH	BACK OF FOOTPATH	0	POST TOP	NOT APPLICABLE	RIGID COLUMN	URBIS	AXIA 2 S1	MALLATITE	TUBULAR STEEL	6	GALVANISED	TUBULAR
46105612	ACCESS ROAD BETWEEN GLANVILLE AVENUE AND	Scunthorpe	488946.09	409956.03	7E	7006	00198729	12/10/2020 00:00	5	4	LESS THAN 30MPH	BACK OF FOOTPATH	0	POST TOP	NOT APPLICABLE	RIGID COLUMN	URBIS	AXIA 2 S1	MALLATITE	TUBULAR STEEL	6	GALVANISED	TUBULAR
46105612	ACCESS ROAD BETWEEN GLANVILLE AVENUE AND	Scunthorpe	488909.97	409953.75	8E	7007	00198730	12/10/2020 00:00	5	4	LESS THAN 30MPH	BACK OF FOOTPATH	0	POST TOP	NOT APPLICABLE	RIGID COLUMN	URBIS	AXIA 2 S1	MALLATITE	TUBULAR STEEL	6	GALVANISED	TUBULAR
46105612	ACCESS ROAD BETWEEN GLANVILLE AVENUE AND	Scunthorpe	488873.07	409951.32	9E	7008	00198731	12/10/2020 00:00	5	4	LESS THAN 30MPH	BACK OF FOOTPATH	0	POST TOP	NOT APPLICABLE	RIGID COLUMN	URBIS	AXIA 2 S1	MALLATITE	TUBULAR STEEL	6	GALVANISED	TUBULAR
46105621	GALLAGHER RETAIL PARK	Gunness Parish	486512.06	411143.34	1	7000	00206683	01/04/2000 00:00	2	2	LESS THAN 30MPH	BACK OF FOOTPATH	1250	SINGLE ARM	NOT APPLICABLE	RIGID COLUMN	HOLOPHANE	VMAX V2 L144 LED	PETITJEAN	SHEET STEEL	10	GALVANISED	THAMES
46105621	GALLAGHER RETAIL PARK	Gunness Parish	486518.53	411169.96	2	7001	00206684	01/04/2000 00:00	2	2	LESS THAN 30MPH	BACK OF FOOTPATH	1250	SINGLE ARM	NOT APPLICABLE	RIGID COLUMN	HOLOPHANE	VMAX V2 L144 LED	PETITJEAN	SHEET STEEL	10	GALVANISED	THAMES
46105621	GALLAGHER RETAIL PARK	Gunness Parish	486511.07	411188.44	3	7002	00206685	01/04/2000 00:00	2	2	LESS THAN 30MPH	BACK OF FOOTPATH	1250	SINGLE ARM	NOT APPLICABLE	RIGID COLUMN	HOLOPHANE	VMAX V2 L144 LED	PETITJEAN	SHEET STEEL	10	GALVANISED	THAMES
46105621	GALLAGHER RETAIL PARK	Gunness Parish	486484.68	411171	4	7003	00206686	01/04/2000 00:00	2	2	LESS THAN 30MPH	BACK OF FOOTPATH	1250	SINGLE ARM	NOT APPLICABLE	RIGID COLUMN	HOLOPHANE	VMAX V2 L144 LED	PETITJEAN	SHEET STEEL	10	GALVANISED	THAMES
46105621	GALLAGHER RETAIL PARK	Gunness Parish	486478.36	411198.05	5	7004	00206687	01/04/2000 00:00	2	2	LESS THAN 30MPH	BACK OF FOOTPATH	1250	SINGLE ARM	NOT APPLICABLE	RIGID COLUMN	HOLOPHANE	VMAX V2 L144 LED	PETITJEAN	SHEET STEEL	10	GALVANISED	THAMES
46105621	GALLAGHER RETAIL PARK	Gunness Parish	486500.72	411202.9	6	7005	00206688	01/04/2000 00:00	2	2	LESS THAN 30MPH	BACK OF FOOTPATH	1250	SINGLE ARM	NOT APPLICABLE	RIGID COLUMN	HOLOPHANE	VMAX V2 L144 LED	PETITJEAN	SHEET STEEL	10	GALVANISED	THAMES
46105621	GALLAGHER RETAIL PARK	Gunness Parish	486487.69	411230.94	7	7006	00206689	01/04/2000 00:00	2	2	LESS THAN 30MPH	BACK OF FOOTPATH	1000	SINGLE ARM	NOT APPLICABLE	RIGID COLUMN	HOLOPHANE	VMAX V2 L144 LED	PETITJEAN	SHEET STEEL	10	GALVANISED	THAMES
46105621	GALLAGHER RETAIL PARK	Gunness Parish	486499.37	411255.01	8	7007	00206690	01/04/2000 00:00	2	2	LESS THAN 30MPH	BACK OF FOOTPATH	1250	SINGLE ARM	NOT APPLICABLE	RIGID COLUMN	HOLOPHANE	VMAX V2 L144 LED	PETITJEAN	SHEET STEEL	10	GALVANISED	THAMES
46105621	GALLAGHER RETAIL PARK	Gunness Parish	486488.27	411284.32	9	7008	00206691	06/02/2019 00:00	2	2	LESS THAN 30MPH	BACK OF FOOTPATH	1250	SINGLE ARM	NOT APPLICABLE	RIGID COLUMN	HOLOPHANE	VMAX V2 L144 LED	MALLATITE	TUBULAR STEEL	10	GALVANISED	TUBULAR
46105622	ACCESS ROAD TO THE OLD FARM HOUSE	Gunness Parish	486482.23	410987.52	1	7000	00206692	01/04/2000 00:00	2	2	LESS THAN 30MPH	BACK OF FOOTPATH	1000	SINGLE ARM	NOT APPLICABLE	RIGID COLUMN	HOLOPHANE	VMAX V2 L044 LED	PETITJEAN	SHEET STEEL	8	GALVANISED	THAMES
46105622	ACCESS ROAD TO THE OLD FARM HOUSE	Gunness Parish	486458.06	411002.27	2	7001	00206693	01/04/2000 00:00	2	2	LESS THAN 30MPH	BACK OF FOOTPATH	1000	SINGLE ARM	NOT APPLICABLE	RIGID COLUMN	HOLOPHANE	VMAX V2 L044 LED	PETITJEAN	SHEET STEEL	8	GALVANISED	THAMES
46105623	ACCESS ROAD TO DEVELOPMENT NORTH OF WINT	Scunthorpe	490185.73	413006.6	1	7001	00201794	01/04/1992 00:00	4	4	GREATER THAN 50MPH	BACK OF FOOTPATH	1500	SINGLE ARM	LIGHT GREY	RIGID COLUMN	URBIS	AXIA 2 S1	PETITJEAN	SHEET STEEL	10	PAINTED	THAMES
46105623	ACCESS ROAD TO DEVELOPMENT NORTH OF WINT	Scunthorpe	490198.39	413021.92	2	7002	00201795	01/04/1992 00:00	4	4	GREATER THAN 50MPH	BACK OF FOOTPATH	1500	SINGLE ARM	LIGHT GREY	RIGID COLUMN	URBIS	AXIA 2 S1	PETITJEAN	SHEET STEEL	10	PAINTED	THAMES
46110029	CRACKLE HILL	Haxey Parish	475604.6	399766.29	1	7000	00206703	01/04/1995 00:00	6	2	LESS THAN 30MPH	BACK OF FOOTPATH	0	POST TOP	BLACK	RIGID COLUMN	URBIS	AXIA 2 S1	MALLATITE	TUBULAR STEEL	5	PAINTED	STEPPED TUBULAR
46110029	CRACKLE HILL	Haxey Parish	475604.24	399790.28	2	7001	00206704	01/04/1995 00:00	6	2	LESS THAN 30MPH	BACK OF FOOTPATH	0	POST TOP	BLACK	RIGID COLUMN	URBIS	AXIA 2 S1	MALLATITE	TUBULAR STEEL	5	PAINTED	STEPPED TUBULAR
46110029	CRACKLE HILL	Haxey Parish	475612.84	399801.03	3	7002	00206705	01/04/1995 00:00	6	2	LESS THAN 30MPH	BACK OF FOOTPATH	0	POST TOP	BLACK	RIGID COLUMN	URBIS	AXIA 2 S1	MALLATITE	TUBULAR STEEL	5	PAINTED	STEPPED TUBULAR
46110029	CRACKLE HILL	Haxey Parish	475619.12	399841.09	4	7003	00206706	01/04/1995 00:00	6	2	LESS THAN 30MPH	BACK OF FOOTPATH	0	POST TOP	BLACK	RIGID COLUMN	URBIS	AXIA 2 S1	MALLATITE	TUBULAR STEEL	5	PAINTED	STEPPED TUBULAR
46110029	CRACKLE HILL	Haxey Parish	475614.37	399865.45	5	7004	00206707	01/04/1995 00:00	6	2	LESS THAN 30MPH	BACK OF FOOTPATH	0	POST TOP	BLACK	RIGID COLUMN	URBIS	AXIA 2 S1	MALLATITE	TUBULAR STEEL	5	PAINTED	STEPPED TUBULAR
46110029	CRACKLE HILL	Haxey Parish	475593.94	399867.6	6	7005	00206708	01/04/1995 00:00	6	2	LESS THAN 30MPH	BACK OF FOOTPATH	0	POST TOP	BLACK	RIGID COLUMN	URBIS	AXIA 2 S1	MALLATITE	TUBULAR STEEL	5	PAINTED	STEPPED TUBULAR
46110030	YEW DRIVE	Bottesford Parish	489967.53	406918.44	1	7000	00206709	01/04/2001 00:00	3	1	LESS THAN 30MPH	BACK OF FOOTPATH	0	POST TOP	NOT APPLICABLE	RIGID COLUMN	URBIS	AXIA 2 S1	MALLATITE	TUBULAR STEEL	5	GALVANISED	STEPPED TUBULAR
46110030	YEW DRIVE	Bottesford Parish	489971.7	406954.13	2	7001	00206710	01/04/2001 00:00	3	1	LESS THAN 30MPH	BACK OF FOOTPATH	0	POST TOP	NOT APPLICABLE	RIGID COLUMN	URBIS	AXIA 2 S1	MALLATITE	TUBULAR STEEL	5	GALVANISED	STEPPED TUBULAR
46110030	YEW DRIVE	Bottesford Parish	489984.08	406978.96	3	7002	00206711	01/04/2001 00:00	3	1	LESS THAN 30MPH	BACK OF FOOTPATH	0	POST TOP	NOT APPLICABLE	RIGID COLUMN	URBIS	AXIA 2 S1	MALLATITE	TUBULAR STEEL	5	GALVANISED	STEPPED TUBULAR
46110031	WOODPECKER WAY	Kirton in Lindsey Parish	493649.25	397974.86	1	7000	00206712	01/04/2001 00:00	1	3	LESS THAN 30MPH	VERGE	0	POST TOP	NOT APPLICABLE	RIGID COLUMN	URBIS	AXIA 2 S1	MALLATITE	TUBULAR STEEL	5	GALVANISED	STEPPED TUBULAR
46110031	WOODPECKER WAY	Kirton in Lindsey Parish	493678.74	397967.99	2	7001	00206713	01/04/2001 00:00	1	3	LESS THAN 30MPH	VERGE	0	POST TOP	NOT APPLICABLE	RIGID COLUMN	URBIS	AXIA 2 S1	MALLATITE	TUBULAR STEEL	5	GALVANISED	STEPPED TUBULAR
46110031	WOODPECKER WAY	Kirton in Lindsey Parish	493687.11	397933.88	3	7002	00206714	01/04/2001 00:00	1	3	LESS THAN 30MPH	VERGE	0	POST TOP	NOT APPLICABLE	RIGID COLUMN	URBIS	AXIA 2 S1	MALLATITE	TUBULAR STEEL	5	GALVANISED	STEPPED TUBULAR
46110031	WOODPECKER WAY	Kirton in Lindsey Parish	493701.83	397901.56	4	7003	00206715	01/04/2001 00:00	1	3	LESS THAN 30MPH	VERGE	0	POST TOP	NOT APPLICABLE	RIGID COLUMN	URBIS	AXIA 2 S1	MALLATITE	TUBULAR STEEL	5	GALVANISED	STEPPED TUBULAR
46110031	WOODPECKER WAY	Kirton in Lindsey Parish	493678.89	397879.41	5	7004	00206716	01/04/2001 00:00	1	3	LESS THAN 30MPH	VERGE	0	POST TOP	NOT APPLICABLE	RIGID COLUMN	URBIS	AXIA 2 S1	MALLATITE	TUBULAR STEEL	5	GALVANISED	STEPPED TUBULAR
46110031	WOODPECKER WAY	Kirton in Lindsey Parish	493644.77	397868.72	6	7005	00206717	01/04/2001 00:00	1	3	LESS THAN 30MPH	VERGE	0	POST TOP	NOT APPLICABLE	RIGID COLUMN	URBIS	AXIA 2 S1	MALLATITE	TUBULAR STEEL	5	GALVANISED	STEPPED TUBULAR
46110031	WOODPECKER WAY	Kirton in Lindsey Parish	493642.7	397889.6	7	7006	00206718	01/04/2001 00:00	1	3	LESS THAN 30MPH	VERGE	0	POST TOP	NOT APPLICABLE	RIGID COLUMN	URBIS	AXIA 2 S1	MALLATITE	TUBULAR STEEL	5	GALVANISED	STEPPED TUBULAR
46110032	BADER WAY	Kirton in Lindsey Parish	493562.3	397895.8	1	7000	00206719	01/04/2001 00:00	1	3	LESS THAN 30MPH	BACK OF FOOTPATH	0	POST TOP	NOT APPLICABLE	RIGID COLUMN	URBIS	AXIA 2 S1	MALLATITE	TUBULAR STEEL	5	GALVANISED	STEPPED TUBULAR
46110032	BADER WAY	Kirton in Lindsey Parish	493588.26	397916.02	2	7001	00206720	01/04/2001 00:00	1	3	LESS THAN 30MPH	BACK OF FOOTPATH	0	POST TOP	NOT APPLICABLE	RIGID COLUMN	URBIS	AXIA 2 S1	MALLATITE	TUBULAR STEEL	5	GALVANISED	STEPPED TUBULAR
46110032	BADER WAY	Kirton in Lindsey Parish	493612.83	397942.87	3	7002	00206721	01/04/2001 00:00	1	3	LESS THAN 30MPH	BACK OF FOOTPATH	0	POST TOP	NOT APPLICABLE	RIGID COLUMN	URBIS	AXIA 2 S1	MALLATITE	TUBULAR STEEL	5	GALVANISED	STEPPED TUBULAR
46110032	BADER WAY	Kirton in Lindsey Parish	493620.23	397965.05	4	7003	00206722	01/04/2001 00:00	1	3	LESS THAN 30MPH	BACK OF FOOTPATH	0	POST TOP	NOT APPLICABLE	RIGID COLUMN	URBIS	AXIA 2 S1	MALLATITE	TUBULAR STEEL	5	GALVANISED	STEPPED TUBULAR
46110032	BADER WAY	Kirton in Lindsey Parish	493617.76	397999.06	5	7004	00206723	01/04/2001 00:00	1	3	LESS THAN 30MPH	BACK OF FOOTPATH	0	POST TOP	NOT APPLICABLE	RIGID COLUMN	URBIS	AXIA 2 S1	MALLATITE	TUBULAR STEEL	5	GALVANISED	STEPPED TUBULAR
46110033	THE REIN	Haxey Parish	474330.39	399739.89	1	7000	00206724	01/04/1999 00:00	6	2	LESS THAN 30MPH	VERGE	0	POST TOP	NOT APPLICABLE	RIGID COLUMN	URBIS	AXIA 2 S1	PETITJEAN	TUBULAR STEEL	5	GALVANISED	METRO
46110033	THE REIN	Haxey Parish	474312.06	399759.91	2	7001	00206725	01/04/1999 00:00	6	2	LESS THAN 30MPH	VERGE	0	POST TOP	NOT APPLICABLE	RIGID COLUMN	URBIS	AXIA 2 S1	PETITJEAN	TUBULAR STEEL	5	GALVANISED	METRO
46110033	THE REIN	Haxey Parish	474291.5	399773.65	3	7002	00206726		6	2	LESS THAN 30MPH	BACK OF FOOTPATH	0	POST TOP	NOT APPLICABLE	RIGID COLUMN	URBIS	AXIA 2 S1	MALLATITE	TUBULAR STEEL	6	GALVANISED	TUBULAR
46110034	LINTON CLOSE	Haxey Parish	474326.43	399769.1	1	7000	00206727	01/04/1999 00:00	6	2	LESS THAN 30MPH	VERGE	0	POST TOP	NOT APPLICABLE	RIGID COLUMN	URBIS	AXIA 2 S1	PETITJEAN	TUBULAR STEEL	5	GALVANISED	METRO
46110034	LINTON CLOSE	Haxey Parish	474342.87	399774.53	2	7001	00206728	01/04/1999 00:00	6	2	LESS THAN 30MPH	VERGE	0	POST TOP	NOT APPLICABLE	RIGID COLUMN	URBIS	AXIA 2 S1	PETITJEAN	TUBULAR STEEL	5	GALVANISED	METRO
46110035	SAXTON CLOSE	Scunthorpe	488466.07	408758.9	1	7000	00206729	01/04/2001 00:00	5	2	LESS THAN 30MPH	BACK OF FOOTPATH	0	POST TOP	NOT APPLICABLE	RIGID COLUMN	URBIS	AXIA 2 S1	MALLATITE	TUBULAR STEEL	5	GALVANISED	STEPPED TUBULAR
46110035	SAXTON CLOSE	Scunthorpe	488475.52	408777.56	2	7001	00206730	01/04/2001 00:00	5	2	LESS THAN 30MPH	BACK OF FOOTPATH	0	POST TOP	NOT APPLICABLE	RIGID COLUMN	URBIS	AXIA 2 S1	MALLATITE	TUBULAR STEEL	5	GALVANISED	STEPPED TUBULAR
46110035	SAXTON CLOSE	Scunthorpe	488455.04	408771.27	3	7002	00206731	01/04/2001 00:00	5	2	LESS THAN 30MPH	BACK OF FOOTPATH	0	POST TOP	NOT APPLICABLE	RIGID COLUMN	URBIS	AXIA 2 S1	MALLATITE	TUBULAR STEEL	5	GALVANISED	STEPPED TUBULAR
46110035	SAXTON CLOSE	Scunthorpe	488435.78	408770.58	4	7003	00206732	01/04/2001 00:00	5	2	LESS THAN 30MPH	BACK OF FOOTPATH	0	POST TOP	NOT APPLICABLE	RIGID COLUMN	URBIS	AXIA 2 S1	MALLATITE	TUBULAR STEEL	5	GALVANISED	STEPPED TUBULAR
46110035	SAXTON CLOSE	Scunthorpe	488438.72	408751.5	5	7004	00206733	01/04/2001 00:00	5	2	LESS THAN 30MPH	BACK OF FOOTPATH	0	POST TOP	NOT APPLICABLE	RIGID COLUMN	URBIS	AXIA 2 S1	MALLATITE	TUBULAR STEEL	5	GALVANISED	STEPPED TUBULAR
46110036	SWIFT DRIVE	Broughton Parish	499195.34	407275.49	1	7013	00206747	01/04/2001 00:00	1	1	NOT ON A ROAD	BACK OF FOOTPATH	0	POST TOP	NOT APPLICABLE	MID HINGED	URBIS	AXIA 2 S1	PETITJEAN	SHEET STEEL	5	GALVANISED	LEVEN
46110036	SWIFT DRIVE	Broughton Parish	499207.04	407273.66	1	7000	00206734	01/04/2001 00:00	1	1	LESS THAN 30MPH	BACK OF FOOTPATH	0	POST TOP	NOT APPLICABLE	RIGID COLUMN	URBIS	AXIA 2 S1	PETITJEAN	TUBULAR STEEL	6	GALVANISED	STEPPED TUBULAR
46110036	SWIFT DRIVE	Broughton Parish	499206.57	407348.67	1	7012	00206746	01/04/2001 00:00	1	1	LESS THAN 30MPH	VERGE	0	POST TOP	NOT APPLICABLE	RIGID COLUMN	URBIS	AXIA 2 S1	PETITJEAN	TUBULAR STEEL	6	GALVANISED	STEPPED TUBULAR
46110036	SWIFT DRIVE	Broughton Parish	499087.03	407320.73	10	7009	00206743	01/04/2001 00:00	1	1	LESS THAN 30MPH	BACK OF FOOTPATH	0	POST TOP	NOT APPLICABLE	RIGID COLUMN	URBIS	AXIA 2 S1	PETITJEAN	TUBULAR STEEL	6	GALVANISED	STEPPED TUBULAR
46110036	SWIFT DRIVE	Broughton Parish	499102.12	407302.13	11	7010

46110080	TEMPLE ROAD	Scunthorpe	488581.37	408711.53	4	7003	00206894	01/04/2001 00:00	5	2	LESS THAN 30MPH	BACK OF FOOTPATH	0	POST TOP	NOT APPLICABLE	RIGID COLUMN	URBIS	AXIA 2 S1	MALLATITE	TUBULAR STEEL	6	GALVANISED	STEPPED TUBULAR
46110080	TEMPLE ROAD	Scunthorpe	488564.56	408724.25	5	7004	00206895	01/04/2001 00:00	5	2	LESS THAN 30MPH	BACK OF FOOTPATH	0	POST TOP	NOT APPLICABLE	RIGID COLUMN	URBIS	AXIA 2 S1	MALLATITE	TUBULAR STEEL	6	GALVANISED	STEPPED TUBULAR
46110080	TEMPLE ROAD	Scunthorpe	488556.82	408744.92	6	7005	00206896	01/04/2001 00:00	5	2	LESS THAN 30MPH	BACK OF FOOTPATH	0	POST TOP	NOT APPLICABLE	RIGID COLUMN	URBIS	AXIA 2 S1	MALLATITE	TUBULAR STEEL	6	GALVANISED	STEPPED TUBULAR
46110080	TEMPLE ROAD	Scunthorpe	488599.88	408741.49	7	7006	00206897	01/04/2001 00:00	5	2	LESS THAN 30MPH	BACK OF FOOTPATH	0	POST TOP	NOT APPLICABLE	RIGID COLUMN	URBIS	AXIA 2 S1	MALLATITE	TUBULAR STEEL	6	GALVANISED	STEPPED TUBULAR
46110080	TEMPLE ROAD	Scunthorpe	488614.53	408726.96	8	7007	00206898	01/04/2001 00:00	5	2	LESS THAN 30MPH	BACK OF FOOTPATH	0	POST TOP	NOT APPLICABLE	RIGID COLUMN	URBIS	AXIA 2 S1	MALLATITE	TUBULAR STEEL	6	GALVANISED	STEPPED TUBULAR
46110080	TEMPLE ROAD	Scunthorpe	488623.98	408699.88	9	7008	00206899	01/04/2001 00:00	5	2	LESS THAN 30MPH	BACK OF FOOTPATH	0	POST TOP	NOT APPLICABLE	RIGID COLUMN	URBIS	AXIA 2 S1	MALLATITE	TUBULAR STEEL	6	GALVANISED	STEPPED TUBULAR
46110088	ALDAM DRIVE	Belton Parish	478745.87	407022.16	1	7000	00206904	01/04/1995 00:00	5	3	LESS THAN 30MPH	VERGE	0	POST TOP	NOT APPLICABLE	RIGID COLUMN	URBIS	AXIA 2 S1	MALLATITE	TUBULAR STEEL	6	GALVANISED	STEPPED TUBULAR
46110088	ALDAM DRIVE	Belton Parish	478731.95	406987.92	2	7001	00206905	01/04/1995 00:00	5	3	LESS THAN 30MPH	VERGE	0	POST TOP	NOT APPLICABLE	RIGID COLUMN	URBIS	AXIA 2 S1	MALLATITE	TUBULAR STEEL	6	GALVANISED	STEPPED TUBULAR
46110088	ALDAM DRIVE	Belton Parish	478723.22	406967.88	3	7002	00206906	01/04/1995 00:00	5	3	LESS THAN 30MPH	VERGE	0	POST TOP	NOT APPLICABLE	RIGID COLUMN	URBIS	AXIA 2 S1	MALLATITE	TUBULAR STEEL	6	GALVANISED	STEPPED TUBULAR
46110088	ALDAM DRIVE	Belton Parish	478719.09	406956.68	4	7003	00206907	01/04/1995 00:00	5	3	LESS THAN 30MPH	VERGE	0	POST TOP	NOT APPLICABLE	RIGID COLUMN	URBIS	AXIA 2 S1	MALLATITE	TUBULAR STEEL	6	GALVANISED	STEPPED TUBULAR
46110090	SADDLE CLOSE	Goxhill Parish	510567.93	421442.4	1	7000	00206908	01/04/2000 00:00	4	4	LESS THAN 30MPH	VERGE	0	POST TOP	NOT APPLICABLE	RIGID COLUMN	URBIS	AXIA 2 S1	PETITJEAN	TUBULAR STEEL	5	GALVANISED	OTHER
46110090	SADDLE CLOSE	Goxhill Parish	510589.75	421460.08	2	7001	00206909	01/04/2000 00:00	4	4	LESS THAN 30MPH	VERGE	0	POST TOP	NOT APPLICABLE	RIGID COLUMN	URBIS	AXIA 2 S1	PETITJEAN	TUBULAR STEEL	5	GALVANISED	OTHER
46110092	WESTBURN WAY	Gunness Parish	486796.29	411363.41	1	7006	00206916	01/04/1980 00:00	2	2	LESS THAN 30MPH	BACK OF FOOTPATH	0	POST TOP	LIGHT GREY	RIGID COLUMN	URBIS	AXIA 2 S1	PETITJEAN	SHEET STEEL	5	PAINTED	NIDD
46110092	WESTBURN WAY	Gunness Parish	486772.36	411372.55	2	7000	00206910	01/04/1980 00:00	2	2	LESS THAN 30MPH	BACK OF FOOTPATH	0	POST TOP	LIGHT GREY	RIGID COLUMN	URBIS	AXIA 2 S1	PETITJEAN	SHEET STEEL	5	PAINTED	NIDD
46110092	WESTBURN WAY	Gunness Parish	486755.25	411321.27	3	7001	00206911	01/04/1995 00:00	2	2	LESS THAN 30MPH	VERGE	0	POST TOP	LIGHT GREY	RIGID COLUMN	URBIS	AXIA 2 S1	PETITJEAN	SHEET STEEL	5	PAINTED	NIDD
46110092	WESTBURN WAY	Gunness Parish	486749.6	411341.7	4	7002	00206912	01/04/1995 00:00	2	2	LESS THAN 30MPH	VERGE	0	POST TOP	LIGHT GREY	RIGID COLUMN	URBIS	AXIA 2 S1	PETITJEAN	SHEET STEEL	5	PAINTED	NIDD
46110092	WESTBURN WAY	Gunness Parish	486750.49	411374.88	5	7003	00206913	01/04/1995 00:00	2	2	LESS THAN 30MPH	VERGE	0	POST TOP	LIGHT GREY	RIGID COLUMN	URBIS	AXIA 2 S1	PETITJEAN	SHEET STEEL	5	PAINTED	NIDD
46110092	WESTBURN WAY	Gunness Parish	486750.81	411401.86	6	7004	00206914	01/04/1995 00:00	2	2	LESS THAN 30MPH	VERGE	0	POST TOP	LIGHT GREY	RIGID COLUMN	URBIS	AXIA 2 S1	PETITJEAN	SHEET STEEL	5	PAINTED	NIDD
46110092	WESTBURN WAY	Gunness Parish	486767.48	411389.22	7	7005	00206915	01/04/1995 00:00	2	2	LESS THAN 30MPH	VERGE	0	POST TOP	LIGHT GREY	RIGID COLUMN	URBIS	AXIA 2 S1	PETITJEAN	SHEET STEEL	5	PAINTED	NIDD
46110092	WESTBURN WAY	Gunness Parish	486781.19	411400.24	8	7007	00206917	01/04/1995 00:00	2	2	LESS THAN 30MPH	VERGE	0	POST TOP	LIGHT GREY	RIGID COLUMN	URBIS	AXIA 2 S1	PETITJEAN	SHEET STEEL	5	PAINTED	NIDD
46110102	RISBY ROAD	Roxby Cum Risby Parish	493110.57	414829.78	2	7000	00192793	01/04/1980 00:00	1	1	LESS THAN 30MPH	ON POLE	300	SINGLE ARM	NOT APPLICABLE	POLE MOUNTED	URBIS	AXIA 2 S1	WOODEN PO	WOOD	5	NOT APPLICABI	Not Applicable
46110102	RISBY ROAD	Roxby Cum Risby Parish	493191.75	414829.25	3	7001	00192794	01/04/1980 00:00	1	1	LESS THAN 30MPH	ON POLE	300	SINGLE ARM	NOT APPLICABLE	POLE MOUNTED	URBIS	AXIA 2 S1	WOODEN PO	WOOD	5	NOT APPLICABI	Not Applicable
46110102	RISBY ROAD	Roxby Cum Risby Parish	493291.22	414847.53	4	7002	00192795	01/04/1980 00:00	1	1	LESS THAN 30MPH	ON POLE	300	SINGLE ARM	NOT APPLICABLE	POLE MOUNTED	URBIS	AXIA 2 S1	WOODEN PO	WOOD	5	NOT APPLICABI	Not Applicable
46110103	RISBY ROAD	Roxby Cum Risby Parish	492114.47	414677.4	1	7000	00192792	21/08/2019 00:00	1	1	LESS THAN 30MPH	VERGE	0	POST TOP	NOT APPLICABLE	RIGID COLUMN	PHILIPS	PILZEO 16 LED 3.19 KLM	MALLATITE	TUBULAR STEEL	6	GALVANISED	TUBULAR
46110110	THE OLD SCHOOL YARD	Redbourne Parish	497445.45	400053.44	1	7000	00206918	01/04/2001 00:00	1	1	LESS THAN 30MPH	VERGE	0	POST TOP	BLACK	RIGID COLUMN	METCRAFT	VICTORIA	MALLATITE	TUBULAR STEEL	5	PAINTED	STEPPED TUBULAR
46110110	THE OLD SCHOOL YARD	Redbourne Parish	497463.49	400080.86	2	7001	00206919	01/04/2001 00:00	1	1	LESS THAN 30MPH	VERGE	0	POST TOP	BLACK	RIGID COLUMN	METCRAFT	VICTORIA	MALLATITE	TUBULAR STEEL	5	PAINTED	STEPPED TUBULAR
46110110	THE OLD SCHOOL YARD	Redbourne Parish	497484.17	400088.96	3	7002	00206920	01/04/2001 00:00	1	1	LESS THAN 30MPH	VERGE	0	POST TOP	BLACK	RIGID COLUMN	METCRAFT	VICTORIA	MALLATITE	TUBULAR STEEL	5	PAINTED	STEPPED TUBULAR
46110110	THE OLD SCHOOL YARD	Redbourne Parish	497497.83	400095.92	4	7003	00206921	01/04/2001 00:00	1	1	LESS THAN 30MPH	VERGE	0	POST TOP	BLACK	RIGID COLUMN	METCRAFT	VICTORIA	MALLATITE	TUBULAR STEEL	5	PAINTED	STEPPED TUBULAR
46110110	THE OLD SCHOOL YARD	Redbourne Parish	497484.16	400118.24	5	7004	00206922	01/04/2001 00:00	1	1	LESS THAN 30MPH	VERGE	0	POST TOP	BLACK	RIGID COLUMN	METCRAFT	VICTORIA	MALLATITE	TUBULAR STEEL	5	PAINTED	STEPPED TUBULAR
46110110	THE OLD SCHOOL YARD	Redbourne Parish	497488.6	400141.48	6	7005	00206923	01/04/2001 00:00	1	1	LESS THAN 30MPH	VERGE	0	POST TOP	BLACK	RIGID COLUMN	METCRAFT	VICTORIA	MALLATITE	TUBULAR STEEL	5	PAINTED	STEPPED TUBULAR
46110110	THE OLD SCHOOL YARD	Redbourne Parish	497510.71	400153.51	7	7006	00206924	01/04/2001 00:00	1	1	LESS THAN 30MPH	VERGE	0	POST TOP	BLACK	RIGID COLUMN	METCRAFT	VICTORIA	MALLATITE	TUBULAR STEEL	5	PAINTED	STEPPED TUBULAR
46110114	EIDER CLOSE	Barton upon Humber Parish	502073.41	421876.64	1	7000	00206925	01/04/1997 00:00	5	2	LESS THAN 30MPH	VERGE	0	POST TOP	NOT APPLICABLE	RIGID COLUMN	URBIS	AXIA 2 S1	PETITJEAN	TUBULAR STEEL	6	GALVANISED	STEPPED TUBULAR
46110114	EIDER CLOSE	Barton upon Humber Parish	502082.18	421904.76	2	7001	00206926	01/04/1997 00:00	5	2	LESS THAN 30MPH	VERGE	0	POST TOP	NOT APPLICABLE	RIGID COLUMN	URBIS	AXIA 2 S1	PETITJEAN	TUBULAR STEEL	6	GALVANISED	STEPPED TUBULAR
46110114	EIDER CLOSE	Barton upon Humber Parish	502087.8	421944.5	3	7002	00206927	01/04/1997 00:00	5	2	LESS THAN 30MPH	VERGE	0	POST TOP	NOT APPLICABLE	RIGID COLUMN	URBIS	AXIA 2 S1	PETITJEAN	TUBULAR STEEL	6	GALVANISED	STEPPED TUBULAR
46110114	EIDER CLOSE	Barton upon Humber Parish	502090.34	421968.42	4	7003	00206928	01/04/1997 00:00	5	2	LESS THAN 30MPH	VERGE	0	POST TOP	NOT APPLICABLE	RIGID COLUMN	URBIS	AXIA 2 S1	PETITJEAN	TUBULAR STEEL	6	GALVANISED	STEPPED TUBULAR
46110114	EIDER CLOSE	Barton upon Humber Parish	502093.03	421989.38	5	7004	00206929	01/04/1997 00:00	5	2	LESS THAN 30MPH	VERGE	0	POST TOP	NOT APPLICABLE	RIGID COLUMN	URBIS	AXIA 2 S1	PETITJEAN	TUBULAR STEEL	6	GALVANISED	STEPPED TUBULAR
46110115	HAWTHORNE WAY	Keadby with Althorpe Parish	483365.99	409771.14	1	7000	00206933	01/04/2001 00:00	4	3	LESS THAN 30MPH	BACK OF FOOTPATH	0	POST TOP	NOT APPLICABLE	RIGID COLUMN	URBIS	AXIA 2 S1	MALLATITE	TUBULAR STEEL	5	GALVANISED	STEPPED TUBULAR
46110115	HAWTHORNE WAY	Keadby with Althorpe Parish	483369.69	409793.92	2	7001	00206934	01/04/2001 00:00	4	3	LESS THAN 30MPH	BACK OF FOOTPATH	0	POST TOP	NOT APPLICABLE	RIGID COLUMN	URBIS	AXIA 2 S1	MALLATITE	TUBULAR STEEL	5	GALVANISED	STEPPED TUBULAR
46110115	HAWTHORNE WAY	Keadby with Althorpe Parish	483373.98	409825.04	3	7002	00206935	01/04/2001 00:00	4	3	LESS THAN 30MPH	BACK OF FOOTPATH	0	POST TOP	NOT APPLICABLE	RIGID COLUMN	URBIS	AXIA 2 S1	MALLATITE	TUBULAR STEEL	5	GALVANISED	STEPPED TUBULAR
46110115	HAWTHORNE WAY	Keadby with Althorpe Parish	483396.55	409848.14	4	7003	00206936	01/04/2001 00:00	4	3	LESS THAN 30MPH	BACK OF FOOTPATH	0	POST TOP	NOT APPLICABLE	RIGID COLUMN	URBIS	AXIA 2 S1	MALLATITE	TUBULAR STEEL	5	GALVANISED	STEPPED TUBULAR
46110116	POPLAR CRESCENT	Keadby with Althorpe Parish	483404.3	409832.7	1	7000	00206937	01/04/2001 00:00	4	3	LESS THAN 30MPH	VERGE	0	POST TOP	NOT APPLICABLE	RIGID COLUMN	URBIS	AXIA 2 S1	MALLATITE	TUBULAR STEEL	5	GALVANISED	STEPPED TUBULAR
46110116	POPLAR CRESCENT	Keadby with Althorpe Parish	483419.81	409820.95	2	7001	00206938	01/04/2001 00:00	4	3	LESS THAN 30MPH	VERGE	0	POST TOP	NOT APPLICABLE	RIGID COLUMN	URBIS	AXIA 2 S1	MALLATITE	TUBULAR STEEL	5	GALVANISED	STEPPED TUBULAR
46110116	POPLAR CRESCENT	Keadby with Althorpe Parish	483437.89	409809.8	3	7002	00206939	01/04/2001 00:00	4	3	LESS THAN 30MPH	VERGE	0	POST TOP	NOT APPLICABLE	RIGID COLUMN	URBIS	AXIA 2 S1	MALLATITE	TUBULAR STEEL	5	GALVANISED	STEPPED TUBULAR
46110118	QUEENS DRIVE	Crowle Parish	477149.2	412572.4	1	7009	00206949	01/04/2001 00:00	5	1	NOT ON A ROAD	BACK OF FOOTPATH	0	POST TOP	NOT APPLICABLE	MID HINGED	URBIS	AXIA 2 S1	VALMONT ST	SHEET STEEL	5	GALVANISED	LEVEN
46110118	QUEENS DRIVE	Crowle Parish	477130.42	412644.31	1	7000	00206940	01/04/2001 00:00	5	1	LESS THAN 30MPH	BACK OF FOOTPATH	0	POST TOP	NOT APPLICABLE	RIGID COLUMN	URBIS	AXIA 2 S1	MALLATITE	TUBULAR STEEL	6	GALVANISED	STEPPED TUBULAR
46110118	QUEENS DRIVE	Crowle Parish	477132.19	412612.51	2	7001	00206941	01/04/2001 00:00	5	1	LESS THAN 30MPH	BACK OF FOOTPATH	0	POST TOP	NOT APPLICABLE	RIGID COLUMN	URBIS	AXIA 2 S1	MALLATITE	TUBULAR STEEL	6	GALVANISED	STEPPED TUBULAR
46110118	QUEENS DRIVE	Crowle Parish	477177.1	412624.6	3	7002	00206942	01/04/2001 00:00	5	1	LESS THAN 30MPH	BACK OF FOOTPATH	0	POST TOP	NOT APPLICABLE	RIGID COLUMN	URBIS	AXIA 2 S1	MALLATITE	TUBULAR STEEL	6	GALVANISED	STEPPED TUBULAR
46110118	QUEENS DRIVE	Crowle Parish	477174.8	412613.6	4	7003	00206943	01/04/2001 00:00	5	1	LESS THAN 30MPH	BACK OF FOOTPATH	0	POST TOP	NOT APPLICABLE	RIGID COLUMN	URBIS	AXIA 2 S1	MALLATITE	TUBULAR STEEL	6	GALVANISED	STEPPED TUBULAR
46110118	QUEENS DRIVE	Crowle Parish	477151.1	412593.3	5	7004	00206944	01/04/2001 00:00	5	1	LESS THAN 30MPH	BACK OF FOOTPATH	0	POST TOP	NOT APPLICABLE	RIGID COLUMN	URBIS	AXIA 2 S1	T AND L	TUBULAR STEEL	6	GALVANISED	STEPPED TUBULAR
46110118	QUEENS DRIVE	Crowle Parish	477119.3	412584.8	6	7005	00206945	01/04/2001 00:00	5	1	LESS THAN 30MPH	BACK OF FOOTPATH	0	POST TOP	NOT APPLICABLE	RIGID COLUMN	URBIS	AXIA 2 S1	T AND L	TUBULAR STEEL	6	GALVANISED	STEPPED TUBULAR
46110118	QUEENS DRIVE	Crowle Parish	477083	412571.1	7	7006	00206946	01/04/2001 00:00	5	1	LESS THAN 30MPH	BACK OF FOOTPATH	0	POST TOP	NOT APPLICABLE	RIGID COLUMN	URBIS	AXIA 2 S1	MALLATITE	TUBULAR STEEL	6	GALVANISED	STEPPED TUBULAR
46110118	QUEENS DRIVE	Crowle Parish	477054.1	412567.1	8	7007	00206947	01/04/2001 00:00	5	1	LESS THAN 30MPH	BACK OF FOOTPATH	0	POST TOP	NOT APPLICABLE	RIGID COLUMN	URBIS	AXIA 2 S1	MALLATITE	TUBULAR STEEL	6	GALVANISED	STEPPED TUBULAR
46110118	QUEENS DRIVE	Crowle Parish	477057.5	412553.8	9	7008	00206948	01/04/2001 00:00	5	1	LESS THAN 30MPH	BACK OF FOOTPATH	0	POST TOP	NOT APPLICABLE	RIGID COLUMN	URBIS	AXIA 2 S1	MALLATITE	TUBULAR STEEL	6	GALVANISED	STEPPED TUBULAR
46110120	AXHOLME DRIVE	Epworth Parish	477477.63	403880.95	1	7000	00206950	01/04/1980 00:00	5	3	LESS THAN 30MPH	BACK OF FOOTPATH	0	POST TOP	NOT APPLICABLE	RIGID COLUMN	URBIS	AXIA 2 S1	PETITJEAN	SHEET STEEL	5	GALVANISED	NIDD
46110120	AXHOLME DRIVE	Epworth Parish	477441.07	403888.48	2	7001	00206951	01/04/1980 00:00	5	3	LESS THAN 30MPH	BACK OF FOOTPATH	0	POST TOP	NOT APPLICABLE	RIGID COLUMN	URBIS	AXIA 2 S1	PETITJEAN	SHEET STEEL	5	GALVANISED	NIDD
46110121	OLD SCHOOL LANE	Keadby with Althorpe Parish	483758.9	410688.8	1	7000	00206952	01/04/2001 00:00	4	3	LESS THAN 30MPH	BACK OF FOOTPATH	300	SINGLE ARM	NOT APPLICABLE	RIGID COLUMN	URBIS	AXIA 2 S1	MALLATITE	TUBULAR STEEL	6	GALVANISED	STEPPED TUBULAR
46110121	OLD SCHOOL LANE	Keadby with Althorpe Parish	483956.5	410694.1	10	7009	00206961	01/04/2001 00:00	4	3	LESS THAN 30MPH	BACK OF FOOTPATH	300	SINGLE ARM	NOT APPLICABLE	RIGID COLUMN	URBIS	AXIA 2 S1	MALLATITE	TUBULAR STEEL	6	GALVANISED	STEPPED TUBULAR
46110121	OLD SCHOOL LANE	Keadby with Althorpe Parish	483974.5	410703.9	11	7010	00206962	01/04/2001 00:00	4	3	LESS THAN 30MPH	BACK OF FOOTPATH	300	SINGLE ARM	NOT APPLICABLE	RIGID COLUMN	URBIS	AXIA 2 S1	MALLATITE	TUBULAR STEEL	6	GALVANISED	STEPPED TUBULAR
46110121	OLD SCHOOL LANE	Keadby with Althorpe Parish	483790.8	410676.5	2	7001	00206953	01/04/2001 00:00	4	3	LESS THAN 30MPH	BACK OF FOOTPATH	300	SINGLE ARM	NOT APPLICABLE	RIGID COLUMN	URBIS	AXIA 2 S1	MALLATITE	TUBULAR STEEL	6	GALVANISED	STEPPED TUBULAR
46110121	OLD SCHOOL LANE	Keadby with Althorpe Parish	483818.8	410691.1	3	7002	00206954	01/04/2001 00:00	4	3	LESS THAN 30MPH	BACK OF FOOTPATH	300	SINGLE ARM	NOT APPLICABLE	RIGID COLUMN	URBIS	AXIA 2 S1	MALLATITE	TUBULAR STEEL	6	GALVANISED	STEPPED TUBULAR
46110121	OLD SCHOOL LANE	Keadby with Althorpe Parish	483856.5	410706.6	4	7003	00206955	01/04/2001 00:00	4	3	LESS THAN 30MPH	BACK OF FOOTPATH	300	SINGLE ARM	NOT APPLICABLE	RIGID COLUMN	URBIS	AXIA 2 S1	MALLATITE	TUBULAR STEEL	6	GALVANISED	STEPPED TUBULAR
46110121	OLD SCHOOL LANE	Keadby with Althorpe Parish	483874.2	410690.2	5	7004	00206956	01/04/2001 00:00	4	3	LESS THAN 30MPH	BACK OF FOOTPATH	300	SINGLE ARM	NOT APPLICABLE	RIGID COLUMN	URBIS	AXIA 2 S1	MALLATITE	TUBULAR STEEL	6	GALVANISED	STEPPED TUBULAR
46110121	OLD SCHOOL LANE	Keadby with Althorpe Parish	483869.3	410673.1	6	7005	00206957	01/04/2001 00:00	4	3	LESS THAN 30MPH	BACK OF FOOTPATH	300	SINGLE ARM	NOT APPLICABLE	RIGID COLUMN	URBIS	AXIA 2 S1	MALLATITE	TUBULAR STEEL	6	GALVANISED	STEPPED TUBULAR
46110121	OLD SCHOOL LANE	Keadby with Althorpe Parish	483899.27	410684.56	7	7006	00206958	01/04/2001 00:00	4	3	LESS THAN 30MPH	BACK OF FOOTPATH	300	SINGLE ARM	NOT APPLICABLE	RIGID COLUMN	URBIS	AXIA 2 S1	MALLATITE	TUBULAR STEEL	6	GALVANISED	STEPPED TUBULAR
46110121	OLD SCHOOL LANE	Keadby with Althorpe Parish	483919.2	410689	8	7007	00206959	01/04/2001 00:00	4	3	LESS THAN 30MPH	BACK OF FOOTPATH	300	SINGLE ARM	NOT APPLICABLE	RIGID COLUMN	URBIS	AXIA 2 S1	MALLATITE	TUBULAR STEEL	6	GALVANISED	STEPPED TUBULAR
46110121	OLD SCHOOL LANE	Keadby with Althorpe Parish	483934.7	410684.6	9	7008	00206960	01/04/2001 00:00	4	3	LESS THAN 30MPH	BACK OF FOOTPATH	300	SINGLE ARM	NOT APPLICABLE	RIGID COLUMN	URBIS	AXIA 2 S1	MALLATITE	TUBULAR STEEL	6	GALVANISED	STEPPED TUBULAR
46110122	CURTIS CLOSE	Barton upon Humber Parish	503421.7	421232.94	4	7000	00199666	01/04/1980 00:00	5	2	LESS THAN 30MPH	BACK OF FOOTPATH	0	POST TOP	MID GREY	RIGID COLUMN	URBIS	AXIA 2 S1	PETITJEAN	SHEET STEEL	5	PAINTED	NIDD
46110122	CURTIS CLOSE	Barton upon Humber Parish	503417.29	421203.98	9	7001	00199671	01/04/1980 00:00	5	2	LESS THAN 30MPH	BACK OF FOOTPATH	0	POST TOP	NOT APPLICABLE	RIGID COLUMN	URBIS	AXIA 2 S1	PETITJEAN	SHEET STEEL	5	GALVANISED	NIDD
46110124	PASHLEY WALK	Belton Parish	478513	406469.9	1	7000	00206963	01/04/1996 00:00	5	3	LESS THAN 30MPH	BACK OF FOOTPATH	0	POST TOP	NOT APPLICABLE	RIGID COLUMN	URBIS	AXIA 2 S1	PETITJEAN	SHEET STEEL	6	GALVANISED	DAER
46110124	PASHLEY WALK	Belton Parish	478522.9	406502.4	2	7001	00206964	01/04/1996 00:00	5	3	LESS THAN 30MPH	VERGE	0	POST TOP	NOT APPLICABLE	RIGID COLUMN	URBIS	AXIA 2 S1	PETITJEAN	SHEET STEEL	6	GALVANISED	DAER
46110124	PASHLEY WALK	Belton Parish	478556.2	406509.5	3	7002	00206965	01/04/1996 00:00	5	3	LESS THAN 30MPH	VERGE	0	POST TOP	NOT APPLICABLE	RIGID COLUMN	URBIS	AXIA 2 S1	PETITJEAN	SHEET STEEL	6	GALVANISED	DAER
46110124	PASHLEY WALK	Belton Parish	478581	406509.7	4	7003	00206966	01/04/1996 00:00	5	3	LESS THAN 30MPH	VERGE	0	POST TOP	NOT APPLICABLE	RIGID COLUMN	URBIS	AXIA 2 S1	PETITJEAN	SHEET STEEL	6	GALVANISED	DAER
46110126	LANCASTER DRIVE	South Killingholme Parish	514629.68	416210.5	1	7000	00202405	01/04/2001 00:00	3	1	LESS THAN 30MPH	BACK OF FOOTPATH	0	POST TOP	NOT APPLICABLE	RIGID COLUMN	URBIS	AXIA 2 S1	MALLATITE	TUBULAR STEEL	10	GALVANISED	STEPPED TUBULAR
46110126	LANCASTER DRIVE	South Killingholme Parish	514615.53	416240.46	2	7001	00202406	01/04/2001 00:00	3	1	LESS THAN 30MPH	BACK OF FOOTPATH	0	POST TOP	NOT APPLICABLE	RIGID COLUMN	URBIS	AXIA 2 S1	MALLATITE	TUBULAR STEEL	10	GALVANISED	STEPPED TUBULAR
46110126	LANCASTER DRIVE	South Killingholme Parish	514625.4	416269.8	3	7002	00202407	01/04/2001 00:00	3	1	LESS THAN 30MPH	BACK OF FOOTPATH	0	POST TOP	NOT APPLICABLE	RIGID COLUMN	URBIS	AXIA 2 S1	MALLATITE	TUBULAR STEEL	10	GALVANISED	STEPPED TUBULAR
46110126	LANCASTER DRIVE	South Killingholme Parish	514641.2	416290.9	4	7003	00202408	01/04/2001 00:00	3	1	LESS THAN 30MPH	BACK OF FOOTPATH	0	POST TOP	NOT APPLICABLE	RIGID COLUMN	URBIS	AXIA 2 S1	MALLATITE	TUBULAR STEEL	6	GALVANISED	STEPPED TUBULAR
46110126	LANCASTER DRIVE	South Killingholme Parish	514671.9	416299.3	5	7004	00202409	01/04/2001 00:00	3	1	LESS THAN 30MPH	BACK OF FOOTPATH	0	POST TOP	NOT APPLICABLE	RIGID COLUMN	URBIS	AXIA 2 S1	MALLATITE	TUBULAR STEEL	6	GALVANISED	STEPPED TUBULAR
46110126	LANCASTER DRIVE	South Killingholme Parish	514701.3	416317.9	6	7005	00202410	01/04/2001 00:00	3	1	LESS THAN 30MPH	BACK OF FOOTPATH	0	POST TOP	NOT APPLICABLE	RIGID COLUMN	URBIS	AXIA 2 S1	MALLATITE	TUBULAR STEEL	6	GALVANISED	STEPPED TUBULAR
46110126	LANCASTER DRIVE	South Killingholme Parish	514725.3	416340.8	7	7006	00202411	01/04/2001 00:00	3	1	LESS THAN 30MPH	BACK OF FOOTPATH	0	POST TOP	NOT APPLICABLE	RIGID COLUMN	URBIS	AXIA 2 S1	MALLATITE	TUBULAR STEEL	6	GALVANISED	STEPPED TUBULAR
46110126	LANCASTER DRIVE	South Killingholme Parish	514752.3	416356.2	8	7007	00202412	01/04/2001 00:00	3	1	LESS THAN 30MPH	BACK OF FOOTPATH	0	POST TOP	NOT APPLICABLE	RIGID COLUMN	URBIS	AXIA 2 S1	MALLATITE	TUBULAR STEEL	6	GALVANISED	STEPPED TUBULAR
46110126	LANCASTER DRIVE	South Killingholme Parish	514775	416368	9	7008	00202413	01/04/2001 00:00	3	1	LESS THAN 30MPH	BACK OF FOOTPATH	0	POST TOP	NOT APPLICABLE	RIGID COLUMN	URBIS	AXIA 2 S1	MALLATITE	TUBULAR STEEL	6	GALVANISED	STEPPED TUBULAR
46110127	MEREND CLOSE	Belton Parish	474231.78	408177.86	1	7000	00206967	01/04/2001 00:00	5	3	LESS THAN 30MPH	BACK OF FOOTPATH	0	POST TOP	NOT APPLICABLE	RIGID COLUMN	URBIS	AXIA 2 S1	MALLATITE	TUBULAR STEEL	5	GALVANISED	STEPPED TUBULAR
46110127	MEREND CLOSE	Belton Parish	474208.65	408185.7	2	7001	00206968	01/04/2001 00:00	5	3	LESS THAN 30MPH	VERGE	0	POST TOP	NOT APPLICABLE	RIGID COLUMN	URBIS	AXIA 2 S1	MALLATITE	TUBULAR STEEL	5	GALVANISED	STEPPED TUBULAR
46110127	MEREND CLOSE	Belton Parish	474200.54	408203.33	3	7002	00206969	01/04/2001 00:00	5	3	LESS THAN 30MPH	VERGE	0	POST TOP	NOT APPLICABLE	RIGID COLUMN	URBIS	AXIA 2 S1	MALLATITE	TUBULAR STEEL	5	GALVANISED	STEPPED TUBULAR
46110129	KINGFISHER CLOSE	Broughton Parish	499168.38	407404.5	1	7000	00206970	01/04/2001 00:00	1	1	LESS THAN 30MPH	BACK OF FOOTPATH	0	POST TOP	NOT APPLICABLE	RIGID COLUMN	URBIS	AXIA 2 S1	PETITJEAN	TUBULAR STEEL	6	GALVANISED	STEPPED TUBULAR
46110129	KINGFISHER CLOSE	Broughton Parish	499198.32	407412.18	2	7001	00206971	01/04/2001 00:00

46110182	WALDO WAY	Flixborough Parish	488483.11	414773.25	6	7004	00207123	01/04/2003 00:00	4	4	LESS THAN 30MPH	BACK OF FOOTPATH	800	SINGLE ARM	NOT APPLICABLE	RIGID COLUMN	URBIS	AXIA 2 S1	PETITJEAN	SHEET STEEL	8	GALVANISED	THAMES
46110182	WALDO WAY	Flixborough Parish	488457.65	414782.12	7	7005	00207124	01/04/2003 00:00	4	4	LESS THAN 30MPH	BACK OF FOOTPATH	800	SINGLE ARM	NOT APPLICABLE	RIGID COLUMN	URBIS	AXIA 2 S1	PETITJEAN	SHEET STEEL	8	GALVANISED	THAMES
46110182	WALDO WAY	Flixborough Parish	488483.77	414808.24	8	7006	00207125	01/04/2003 00:00	4	4	LESS THAN 30MPH	BACK OF FOOTPATH	800	SINGLE ARM	NOT APPLICABLE	RIGID COLUMN	URBIS	AXIA 2 S1	PETITJEAN	SHEET STEEL	8	GALVANISED	THAMES
46110183	NISA WAY	Flixborough Parish	488381.27	414627.19	1	7000	00207127	01/04/2007 00:00	4	4	LESS THAN 30MPH	BACK OF FOOTPATH	800	SINGLE ARM	NOT APPLICABLE	RIGID COLUMN	URBIS	AXIA 2 S1	PETITJEAN	SHEET STEEL	8	GALVANISED	THAMES
46110183	NISA WAY	Flixborough Parish	488367	414518	10	7009	04200158	08/09/2017 00:00	4	4	LESS THAN 30MPH	FRONT OF FOOTPATH	800	SINGLE ARM	NOT APPLICABLE	RIGID COLUMN	URBIS	AXIA 2 S1	VALMONT ST	SHEET STEEL	8	GALVANISED	THAMES
46110183	NISA WAY	Flixborough Parish	488381	414483	11	7010	04200159	08/09/2017 00:00	4	4	LESS THAN 30MPH	BACK OF FOOTPATH	800	SINGLE ARM	NOT APPLICABLE	RIGID COLUMN	URBIS	AXIA 2 S1	VALMONT ST	SHEET STEEL	8	GALVANISED	THAMES
46110183	NISA WAY	Flixborough Parish	488350.94	414628.29	2FP	7001	00207128	01/04/2007 00:00	4	4	LESS THAN 30MPH	BACK OF FOOTPATH	800	SINGLE ARM	NOT APPLICABLE	RIGID COLUMN	URBIS	AXIA 2 S1	PETITJEAN	SHEET STEEL	8	GALVANISED	THAMES
46110183	NISA WAY	Flixborough Parish	488342.62	414599.31	3FP	7002	00207129	01/04/2007 00:00	4	4	LESS THAN 30MPH	BACK OF FOOTPATH	800	SINGLE ARM	NOT APPLICABLE	RIGID COLUMN	URBIS	AXIA 2 S1	PETITJEAN	SHEET STEEL	8	GALVANISED	THAMES
46110183	NISA WAY	Flixborough Parish	488311.91	414590.27	4	7003	00207130	01/04/2007 00:00	4	4	LESS THAN 30MPH	BACK OF FOOTPATH	800	SINGLE ARM	NOT APPLICABLE	RIGID COLUMN	URBIS	AXIA 2 S1	PETITJEAN	SHEET STEEL	8	GALVANISED	THAMES
46110183	NISA WAY	Flixborough Parish	488306.11	414619.87	5FP	7004	00207131	01/04/2007 00:00	4	4	LESS THAN 30MPH	BACK OF FOOTPATH	800	SINGLE ARM	NOT APPLICABLE	RIGID COLUMN	URBIS	AXIA 2 S1	PETITJEAN	SHEET STEEL	8	GALVANISED	THAMES
46110183	NISA WAY	Flixborough Parish	488331.34	414629.26	6	7005	00207132	07/01/2021 00:00	4	4	LESS THAN 30MPH	VERGE	500	SINGLE ARM	NOT APPLICABLE	RIGID COLUMN	URBIS	AXIA 2 S1	MALLATITE	TUBULAR STEEL	8	GALVANISED	TUBULAR
46110183	NISA WAY	Flixborough Parish	488285.21	414604.2	7	7006	00207133	01/04/2007 00:00	4	4	LESS THAN 30MPH	BACK OF FOOTPATH	800	SINGLE ARM	NOT APPLICABLE	RIGID COLUMN	URBIS	AXIA 2 S1	PETITJEAN	SHEET STEEL	8	GALVANISED	THAMES
46110183	NISA WAY	Flixborough Parish	488344	414579	8	7007	04200156	08/09/2007 00:00	4	4	LESS THAN 30MPH	BACK OF FOOTPATH	800	SINGLE ARM	NOT APPLICABLE	RIGID COLUMN	URBIS	AXIA 2 S1	VALMONT ST	SHEET STEEL	8	GALVANISED	THAMES
46110183	NISA WAY	Flixborough Parish	488357	414541	9	7008	04200157	08/09/2007 00:00	4	4	LESS THAN 30MPH	BACK OF FOOTPATH	800	SINGLE ARM	NOT APPLICABLE	RIGID COLUMN	URBIS	AXIA 2 S1	VALMONT ST	SHEET STEEL	8	GALVANISED	THAMES
46110184	MALLARD WAY	Broughton Parish	499106.29	407321.8	1	7000	00207134	01/04/2001 00:00	1	1	LESS THAN 30MPH	BACK OF FOOTPATH	0	POST TOP	NOT APPLICABLE	RIGID COLUMN	URBIS	AXIA 2 S1	PETITJEAN	TUBULAR STEEL	6	GALVANISED	STEPPED TUBULAR
46110184	MALLARD WAY	Broughton Parish	499144.16	407326.71	2	7001	00207135	01/04/2001 00:00	1	1	LESS THAN 30MPH	BACK OF FOOTPATH	0	POST TOP	NOT APPLICABLE	RIGID COLUMN	URBIS	AXIA 2 S1	PETITJEAN	TUBULAR STEEL	6	GALVANISED	STEPPED TUBULAR
46110184	MALLARD WAY	Broughton Parish	499141.44	407345.58	3	7002	00207136	01/04/2001 00:00	1	1	LESS THAN 30MPH	BACK OF FOOTPATH	0	POST TOP	NOT APPLICABLE	RIGID COLUMN	URBIS	AXIA 2 S1	PETITJEAN	TUBULAR STEEL	6	GALVANISED	STEPPED TUBULAR
46110187	HANOVER WALK	Scunthorpe	489277.1	412628.4	1	7000	00207137	01/04/2005 00:00	4	4	LESS THAN 30MPH	BACK OF FOOTPATH	0	POST TOP	NOT APPLICABLE	RIGID COLUMN	URBIS	AXIA 2 S1	PETITJEAN	TUBULAR STEEL	6	GALVANISED	METRO
46110187	HANOVER WALK	Scunthorpe	489269.69	412613.52	2	7001	00207138	01/04/2006 00:00	4	4	LESS THAN 30MPH	BACK OF FOOTPATH	0	POST TOP	NOT APPLICABLE	RIGID COLUMN	URBIS	AXIA 2 S1	PETITJEAN	TUBULAR STEEL	6	GALVANISED	METRO
46110187	HANOVER WALK	Scunthorpe	489244.76	412611.32	3	7002	00207139	01/04/2005 00:00	4	4	LESS THAN 30MPH	BACK OF FOOTPATH	0	POST TOP	NOT APPLICABLE	RIGID COLUMN	URBIS	AXIA 2 S1	PETITJEAN	TUBULAR STEEL	6	GALVANISED	METRO
46110187	HANOVER WALK	Scunthorpe	489217.69	412621.45	4	7003	00207140	01/04/2005 00:00	4	4	LESS THAN 30MPH	BACK OF FOOTPATH	0	POST TOP	NOT APPLICABLE	RIGID COLUMN	URBIS	AXIA 2 S1	PETITJEAN	TUBULAR STEEL	6	GALVANISED	METRO
46110187	HANOVER WALK	Scunthorpe	489187.89	412620.43	5	7004	00207141	01/04/2005 00:00	4	4	LESS THAN 30MPH	BACK OF FOOTPATH	0	POST TOP	NOT APPLICABLE	RIGID COLUMN	URBIS	AXIA 2 S1	PETITJEAN	TUBULAR STEEL	6	GALVANISED	METRO
46110187	HANOVER WALK	Scunthorpe	489166.74	412630.96	6	7005	00207142	01/04/2005 00:00	4	4	LESS THAN 30MPH	BACK OF FOOTPATH	0	POST TOP	NOT APPLICABLE	RIGID COLUMN	URBIS	AXIA 2 S1	PETITJEAN	TUBULAR STEEL	6	GALVANISED	METRO
46110187	HANOVER WALK	Scunthorpe	489156.79	412653	7	7006	00207143	01/04/2005 00:00	4	4	LESS THAN 30MPH	BACK OF FOOTPATH	0	POST TOP	NOT APPLICABLE	RIGID COLUMN	URBIS	AXIA 2 S1	PETITJEAN	TUBULAR STEEL	6	GALVANISED	METRO
46110187	HANOVER WALK	Scunthorpe	489136.82	412661.6	8	7007	00207144	01/04/2005 00:00	4	4	LESS THAN 30MPH	BACK OF FOOTPATH	0	POST TOP	NOT APPLICABLE	RIGID COLUMN	URBIS	AXIA 2 S1	PETITJEAN	TUBULAR STEEL	6	GALVANISED	METRO
46110192	NIGHTINGALE CLOSE	Barton upon Humber Parish	503337.99	421570.45	1	7000	00207145	01/04/2001 00:00	5	2	LESS THAN 30MPH	BACK OF FOOTPATH	0	POST TOP	NOT APPLICABLE	RIGID COLUMN	URBIS	AXIA 2 S1	BEI	TUBULAR STEEL	6	GALVANISED	STEPPED TUBULAR
46110192	NIGHTINGALE CLOSE	Barton upon Humber Parish	503361.6	421577.31	2	7001	00207146	01/04/2001 00:00	5	2	LESS THAN 30MPH	BACK OF FOOTPATH	0	POST TOP	NOT APPLICABLE	RIGID COLUMN	URBIS	AXIA 2 S1	BEI	TUBULAR STEEL	6	GALVANISED	STEPPED TUBULAR
46110192	NIGHTINGALE CLOSE	Barton upon Humber Parish	503386.38	421577.52	3	7002	00207147	01/04/2001 00:00	5	2	LESS THAN 30MPH	BACK OF FOOTPATH	0	POST TOP	NOT APPLICABLE	RIGID COLUMN	URBIS	AXIA 2 S1	BEI	TUBULAR STEEL	6	GALVANISED	STEPPED TUBULAR
46110192	NIGHTINGALE CLOSE	Barton upon Humber Parish	503382.76	421555.74	4	7003	00207148	01/04/2001 00:00	5	2	LESS THAN 30MPH	VERGE	0	POST TOP	NOT APPLICABLE	RIGID COLUMN	URBIS	AXIA 2 S1	BEI	TUBULAR STEEL	6	GALVANISED	STEPPED TUBULAR
46110192	NIGHTINGALE CLOSE	Barton upon Humber Parish	503401.06	421532.1	5	7004	00207149	01/04/2001 00:00	5	2	LESS THAN 30MPH	VERGE	0	POST TOP	NOT APPLICABLE	RIGID COLUMN	URBIS	AXIA 2 S1	BEI	TUBULAR STEEL	6	GALVANISED	STEPPED TUBULAR
46110192	NIGHTINGALE CLOSE	Barton upon Humber Parish	503417.61	421509.31	6	7005	00207150	01/04/2001 00:00	5	2	LESS THAN 30MPH	VERGE	0	POST TOP	NOT APPLICABLE	RIGID COLUMN	URBIS	AXIA 2 S1	BEI	TUBULAR STEEL	6	GALVANISED	STEPPED TUBULAR
46110192	NIGHTINGALE CLOSE	Barton upon Humber Parish	503421.19	421526.87	7	7006	00207151	01/04/2001 00:00	5	2	LESS THAN 30MPH	VERGE	0	POST TOP	NOT APPLICABLE	RIGID COLUMN	URBIS	AXIA 2 S1	BEI	TUBULAR STEEL	6	GALVANISED	STEPPED TUBULAR
46110193	ACCESS ROAD OFF MANNABERG WAY	Scunthorpe	489496.41	412794.88	1	7000	00207152	01/04/1992 00:00	4	4	GREATER THAN 50MPH	VERGE	1250	SINGLE ARM	NOT APPLICABLE	RIGID COLUMN	URBIS	AXIA 2 S1	PETITJEAN	SHEET STEEL	8	GALVANISED	THAMES
46110193	ACCESS ROAD OFF MANNABERG WAY	Scunthorpe	489497.4	412760.84	2	7001	00207153	20/04/2020 00:00	4	4	GREATER THAN 50MPH	VERGE	1000	SINGLE ARM	NOT APPLICABLE	RIGID COLUMN	URBIS	AXIA 2 S1	MALLATITE	TUBULAR STEEL	8	GALVANISED	TUBULAR
46110193	ACCESS ROAD OFF MANNABERG WAY	Scunthorpe	489477.62	412753.56	3	7002	00207154	01/04/1992 00:00	4	4	GREATER THAN 50MPH	VERGE	1250	SINGLE ARM	NOT APPLICABLE	RIGID COLUMN	URBIS	AXIA 2 S1	PETITJEAN	SHEET STEEL	8	GALVANISED	THAMES
46110194	MAIN STREET	Owston Ferry Parish	480703.71	397347.7	1	7000	00207155	01/04/1995 00:00	6	2	LESS THAN 30MPH	VERGE	0	POST TOP	NOT APPLICABLE	RIGID COLUMN	URBIS	AXIA 2 S1	PETITJEAN	SHEET STEEL	5	GALVANISED	NIDD
46110194	MAIN STREET	Owston Ferry Parish	480720.17	397033.96	10	7009	00207164	01/04/1995 00:00	6	2	LESS THAN 30MPH	BACK OF FOOTPATH	0	POST TOP	NOT APPLICABLE	RIGID COLUMN	URBIS	AXIA 2 S1	PETITJEAN	SHEET STEEL	5	GALVANISED	NIDD
46110194	MAIN STREET	Owston Ferry Parish	480713.67	397005.71	11	7010	00207165	01/04/1995 00:00	6	2	LESS THAN 30MPH	BACK OF FOOTPATH	0	POST TOP	NOT APPLICABLE	RIGID COLUMN	URBIS	AXIA 2 S1	PETITJEAN	SHEET STEEL	5	GALVANISED	NIDD
46110194	MAIN STREET	Owston Ferry Parish	480703.04	396976.52	12	7011	00207166	01/04/1995 00:00	6	2	LESS THAN 30MPH	BACK OF FOOTPATH	0	POST TOP	NOT APPLICABLE	RIGID COLUMN	URBIS	AXIA 2 S1	PETITJEAN	SHEET STEEL	5	GALVANISED	NIDD
46110194	MAIN STREET	Owston Ferry Parish	480692.1	396952.75	13	7012	00207167	01/04/1995 00:00	6	2	LESS THAN 30MPH	BACK OF FOOTPATH	0	POST TOP	NOT APPLICABLE	RIGID COLUMN	URBIS	AXIA 2 S1	PETITJEAN	SHEET STEEL	5	GALVANISED	NIDD
46110194	MAIN STREET	Owston Ferry Parish	480682.36	396928.34	14	7013	00207168	01/04/1995 00:00	6	2	LESS THAN 30MPH	BACK OF FOOTPATH	0	POST TOP	NOT APPLICABLE	RIGID COLUMN	URBIS	AXIA 2 S1	PETITJEAN	SHEET STEEL	5	GALVANISED	NIDD
46110194	MAIN STREET	Owston Ferry Parish	480663.89	396896.13	15	7014	00207169	01/04/1995 00:00	6	2	LESS THAN 30MPH	BACK OF FOOTPATH	0	POST TOP	NOT APPLICABLE	RIGID COLUMN	URBIS	AXIA 2 S1	PETITJEAN	SHEET STEEL	5	GALVANISED	NIDD
46110194	MAIN STREET	Owston Ferry Parish	480639.17	396865.67	16	7015	00207170	01/04/1995 00:00	6	2	LESS THAN 30MPH	BACK OF FOOTPATH	0	POST TOP	NOT APPLICABLE	RIGID COLUMN	URBIS	AXIA 2 S1	PETITJEAN	SHEET STEEL	5	GALVANISED	NIDD
46110194	MAIN STREET	Owston Ferry Parish	480606.35	396838.13	17	7016	00207171	01/04/1995 00:00	6	2	LESS THAN 30MPH	VERGE	0	POST TOP	NOT APPLICABLE	RIGID COLUMN	URBIS	AXIA 2 S1	PETITJEAN	SHEET STEEL	5	GALVANISED	NIDD
46110194	MAIN STREET	Owston Ferry Parish	480598.02	396813.78	18	7017	00207172	01/04/1995 00:00	6	2	LESS THAN 30MPH	BACK OF FOOTPATH	0	POST TOP	NOT APPLICABLE	RIGID COLUMN	URBIS	AXIA 2 S1	PETITJEAN	SHEET STEEL	5	GALVANISED	NIDD
46110194	MAIN STREET	Owston Ferry Parish	480580.69	396786.96	19	7018	00207173	01/04/1995 00:00	6	2	LESS THAN 30MPH	BACK OF FOOTPATH	0	POST TOP	NOT APPLICABLE	RIGID COLUMN	URBIS	AXIA 2 S1	PETITJEAN	SHEET STEEL	5	GALVANISED	NIDD
46110194	MAIN STREET	Owston Ferry Parish	480707.74	397306.57	2	7001	00207156	01/04/1995 00:00	6	2	LESS THAN 30MPH	VERGE	0	POST TOP	NOT APPLICABLE	RIGID COLUMN	URBIS	AXIA 2 S1	PETITJEAN	SHEET STEEL	5	GALVANISED	NIDD
46110194	MAIN STREET	Owston Ferry Parish	480564.85	396763.95	20	7019	00207174	01/04/1995 00:00	6	2	LESS THAN 30MPH	BACK OF FOOTPATH	0	POST TOP	NOT APPLICABLE	RIGID COLUMN	URBIS	AXIA 2 S1	PETITJEAN	SHEET STEEL	5	GALVANISED	NIDD
46110194	MAIN STREET	Owston Ferry Parish	480548.73	396740.75	21	7020	00207175	01/04/1995 00:00	6	2	LESS THAN 30MPH	BACK OF FOOTPATH	0	POST TOP	NOT APPLICABLE	RIGID COLUMN	URBIS	AXIA 2 S1	PETITJEAN	SHEET STEEL	5	GALVANISED	NIDD
46110194	MAIN STREET	Owston Ferry Parish	480515.81	396714.63	22	7021	00207176	01/04/1995 00:00	6	2	LESS THAN 30MPH	BACK OF FOOTPATH	0	POST TOP	NOT APPLICABLE	RIGID COLUMN	URBIS	AXIA 2 S1	PETITJEAN	SHEET STEEL	5	GALVANISED	NIDD
46110194	MAIN STREET	Owston Ferry Parish	480494.69	396690.87	23	7022	00207177	01/04/1995 00:00	6	2	LESS THAN 30MPH	VERGE	0	POST TOP	NOT APPLICABLE	RIGID COLUMN	URBIS	AXIA 2 S1	PETITJEAN	SHEET STEEL	5	GALVANISED	NIDD
46110194	MAIN STREET	Owston Ferry Parish	480486.58	396664.94	24	7023	00207178	01/04/1995 00:00	6	2	LESS THAN 30MPH	BACK OF FOOTPATH	0	POST TOP	NOT APPLICABLE	RIGID COLUMN	URBIS	AXIA 2 S1	PETITJEAN	SHEET STEEL	5	GALVANISED	NIDD
46110194	MAIN STREET	Owston Ferry Parish	480453.99	396650.81	25	7024	00207179	01/04/1995 00:00	6	2	LESS THAN 30MPH	VERGE	0	POST TOP	NOT APPLICABLE	RIGID COLUMN	URBIS	AXIA 2 S1	PETITJEAN	SHEET STEEL	5	GALVANISED	NIDD
46110194	MAIN STREET	Owston Ferry Parish	480452.86	396626.29	26	7025	00207180	01/04/1995 00:00	6	2	LESS THAN 30MPH	BACK OF FOOTPATH	0	POST TOP	NOT APPLICABLE	RIGID COLUMN	URBIS	AXIA 2 S1	PETITJEAN	SHEET STEEL	5	GALVANISED	NIDD
46110194	MAIN STREET	Owston Ferry Parish	480433.24	396617.99	27	7026	00207181	01/04/1995 00:00	6	2	LESS THAN 30MPH	VERGE	0	POST TOP	NOT APPLICABLE	RIGID COLUMN	URBIS	AXIA 2 S1	PETITJEAN	SHEET STEEL	5	GALVANISED	NIDD
46110194	MAIN STREET	Owston Ferry Parish	480440.03	396604.79	28	7027	00207182	01/04/1995 00:00	6	2	LESS THAN 30MPH	BACK OF FOOTPATH	0	POST TOP	NOT APPLICABLE	RIGID COLUMN	URBIS	AXIA 2 S1	PETITJEAN	SHEET STEEL	5	GALVANISED	NIDD
46110194	MAIN STREET	Owston Ferry Parish	480407.97	396592.34	29	7028	00207183	01/04/1995 00:00	6	2	LESS THAN 30MPH	VERGE	0	POST TOP	NOT APPLICABLE	RIGID COLUMN	URBIS	AXIA 2 S1	PETITJEAN	SHEET STEEL	5	GALVANISED	NIDD
46110194	MAIN STREET	Owston Ferry Parish	480710.16	397271.08	3	7002	00207157	01/04/1995 00:00	6	2	LESS THAN 30MPH	VERGE	0	POST TOP	NOT APPLICABLE	RIGID COLUMN	URBIS	AXIA 2 S1	PETITJEAN	SHEET STEEL	5	GALVANISED	NIDD
46110194	MAIN STREET	Owston Ferry Parish	480375.81	396555.55	30	7029	00207184	01/04/1995 00:00	6	2	LESS THAN 30MPH	VERGE	0	POST TOP	NOT APPLICABLE	RIGID COLUMN	URBIS	AXIA 2 S1	PETITJEAN	SHEET STEEL	5	GALVANISED	NIDD
46110194	MAIN STREET	Owston Ferry Parish	480714.19	397239.63	4	7003	00207158	01/04/1995 00:00	6	2	LESS THAN 30MPH	VERGE	0	POST TOP	NOT APPLICABLE	RIGID COLUMN	URBIS	AXIA 2 S1	PETITJEAN	SHEET STEEL	5	GALVANISED	NIDD
46110194	MAIN STREET	Owston Ferry Parish	480705.79	397199.12	5	7004	00207159	01/04/1995 00:00	6	2	LESS THAN 30MPH	VERGE	0	POST TOP	NOT APPLICABLE	RIGID COLUMN	URBIS	AXIA 2 S1	PETITJEAN	SHEET STEEL	5	GALVANISED	NIDD
46110194	MAIN STREET	Owston Ferry Parish	480719.21	397171.63	6	7005	00207160	01/04/1995 00:00	6	2	LESS THAN 30MPH	BACK OF FOOTPATH	0	POST TOP	NOT APPLICABLE	RIGID COLUMN	URBIS	AXIA 2 S1	PETITJEAN	SHEET STEEL	5	GALVANISED	NIDD
46110194	MAIN STREET	Owston Ferry Parish	480713.46	397132.84	7	7006	00207161	01/04/1995 00:00	6	2	LESS THAN 30MPH	VERGE	0	POST TOP	NOT APPLICABLE	RIGID COLUMN	URBIS	AXIA 2 S1	PETITJEAN	SHEET STEEL	5	GALVANISED	NIDD
46110194	MAIN STREET	Owston Ferry Parish	480723.27	397100.78	8	7007	00207162	01/04/1995 00:00	6	2	LESS THAN 30MPH	BACK OF FOOTPATH	0	POST TOP	NOT APPLICABLE	RIGID COLUMN	URBIS	AXIA 2 S1	PETITJEAN	SHEET STEEL	5	GALVANISED	NIDD
46110194	MAIN STREET	Owston Ferry Parish	480715.05	397065.49	9	7008	00207163	01/04/1995 00:00	6	2	LESS THAN 30MPH	VERGE	0	POST TOP	NOT APPLICABLE	RIGID COLUMN	URBIS	AXIA 2 S1	PETITJEAN	SHEET STEEL	5	GALVANISED	NIDD
46110196	WORSLEY PADDOCK	Ulceby Parish	510779	414806	1	7000	04200132	19/07/2010 00:00	3	1	LESS THAN 30MPH	VERGE	0	POST TOP	NOT APPLICABLE	RIGID COLUMN	URBIS	AXIA 2 S1	VALMONT ST	TUBULAR STEEL	6	GALVANISED	TUBULAR
46110196	WORSLEY PADDOCK	Ulceby Parish	510769	414831	2	7001	04200133	19/07/2010 00:00	3	1	LESS THAN 30MPH	VERGE	0	POST TOP	NOT APPLICABLE	RIGID COLUMN	URBIS	AXIA 2 S1	VALMONT ST	TUBULAR STEEL	6	GALVANISED	TUBULAR
46110196	WORSLEY PADDOCK	Ulceby Parish	510768.08	414868.1	3	7002	04200134	19/07/2010 00:00	3	1	LESS THAN 30MPH	VERGE	0	POST TOP	NOT APPLICABLE	RIGID COLUMN	URBIS	AXIA 2 S1	VALMONT ST	TUBULAR STEEL	6	GALVANISED	TUBULAR
46110196	WORSLEY PADDOCK	Ulceby Parish	510775	414890	4	7003	04200135	19/07/2010 00:00	3	1	LESS THAN 30MPH	VERGE	0	POST TOP	NOT APPLICABLE	RIGID COLUMN	URBIS	AXIA 2 S1	VALMONT ST	TUBULAR STEEL	6	GALVANISED	TUBULAR
46110196	WORSLEY PADDOCK	Ulceby Parish	510818	414892	5	7004	04200136	19/07/2010 00:00	3	1	LESS THAN 30MPH	VERGE	0	POST TOP	NOT APPLICABLE	RIGID COLUMN	URBIS	AXIA 2 S1	VALMONT ST	TUBULAR STEEL	6	GALVANISED	TUBULAR
46110196	WORSLEY PADDOCK	Ulceby Parish	510845	414906	6	7005	04200137	19/07/2010 00:00	3	1	LESS THAN 30MPH	VERGE	0	POST TOP	NOT APPLICABLE	RIGID COLUMN	URBIS	AXIA 2 S1	VALMONT ST	TUBULAR STEEL	6	GALVANISED	TUBULAR
46110196	WORSLEY PADDOCK	Ulceby Parish	510869	414903	7	7006	04200138	19/07/2010 00:00	3	1	LESS THAN 30MPH	VERGE	0	POST TOP	NOT APPLICABLE	RIGID COLUMN	URBIS	AXIA 2 S1	VALMONT ST	TUBULAR STEEL	6	GALVANISED	TUBULAR
46110199	CLIPSON CREST	Barton upon Humber Parish	502406	421058	1	7016	00211822	28/02/2018 00:00	5	2	NOT ON A ROAD	BACK OF FOOTPATH	0	POST TOP	NOT APPLICABLE	MID HINGED	URBIS	AXIA 2 S1	VALMONT ST	SHEET STEEL	5	GALVANISED	LEVEN
46110199	CLIPSON CREST	Barton upon Humber Parish	502511	421072	1	7000	00211806	28/02/2018 00:00	5	2	LESS THAN 30MPH	BACK OF FOOTPATH	0	POST TOP	NOT APPLICABLE	RIGID COLUMN	URBIS	AXIA 2 S1	VALMONT ST	TUBULAR STEEL	6	GALVANISED	TUBULAR
46110199	CLIPSON CREST	Barton upon Humber Parish	502377	421097	10	7009	00211815	28/02/2018 00:00	5	2	LESS THAN 30MPH	BACK OF FOOTPATH	0	POST TOP	NOT APPLICABLE	RIGID COLUMN	URBIS	AXIA 2 S1	VALMONT ST	TUBULAR STEEL	6	GALVANISED	TUBULAR
46110199	CLIPSON CREST	Barton upon Humber Parish	502371	421110	11	7010	00211816	28/02/2018 00:00	5	2	LESS THAN 30MPH	BACK OF FOOTPATH	0	POST TOP	NOT APPLICABLE	RIGID COLUMN	URBIS	AXIA 2 S1	VALMONT ST	TUBULAR STEEL	6	GALVANISED	TUBULAR
46110199	CLIPSON CREST	Barton upon Humber Parish	502394	421120	12	7011	00211817	28/02/2018 00:00	5	2	LESS THAN 30MPH	BACK OF FOOTPATH	0	POST TOP	NOT APPLICABLE	RIGID COLUMN	URBIS	AXIA 2 S1	VALMONT ST	TUBULAR STEEL	6	GALVANISED	TUBULAR
46110199	CLIPSON CREST	Barton upon Humber Parish	502429	421113	13	7012	00211818	28/02/2018 00:00	5	2	LESS THAN 30MPH	BACK OF FOOTPATH	0	POST TOP	NOT APPLICABLE	RIGID COLUMN	URBIS	AXIA 2 S1	VALMONT ST	TUBULAR STEEL	6	GALVANISED	TUBULAR
46110199	CLIPSON CREST	Barton upon Humber Parish	502460	421118	14	7013	00211819	28/02/2018 00:00	5	2	LESS THAN 30MPH	BACK OF FOOTPATH	0	POST TOP	NOT APPLICABLE	RIGID COLUMN	URBIS	AXIA 2 S1	VALMONT ST	TUBULAR STEEL	6	GALVANISED	TUBULAR
46110199	CLIPSON CREST	Barton upon Humber Parish	502478	421095	15	7014	00211820	28/02/2018 00:00	5	2	LESS THAN 30MPH	BACK OF FOOTPATH	0	POST TOP	NOT APPLICABLE	RIGID COLUMN	URBIS	AXIA 2 S1	VALMONT ST	TUBULAR STEEL	6	GALVANISED	TUBULAR
46110199	CLIPSON CREST	Barton upon Humber Parish	502488	421081	16	7015	00211821	28/02/2018 00:00	5	2	LESS THAN 30MPH	BACK OF FOOTPATH	0	POST TOP	NOT APPLICABLE	RIGID COLUMN	URBIS	AXIA 2 S1	VALMONT ST	TUBULAR STEEL	6	GALVANISED	TUBULAR
46110199	CLIPSON CREST	Barton upon Humber Parish	502414	421081	2	7017	00211823	28/02/2018 00:00	5	2	NOT ON A ROAD	BACK OF FOOTPATH	0	POST TOP	NOT APPLICABLE	MID HINGED	URBIS	AXIA 2 S1	VALMONT ST	SHEET STEEL	5	GALVANISED	LEVEN
46110199	CLIPSON CREST	Barton upon Humber Parish	502487	421066	2	7001	00211807	28/02/2018 00:00	5	2	LESS THAN 30MPH	BACK OF FOOTPATH	0	POST TOP	NOT APPLICABLE	RIGID COLUMN	URBIS	AXIA 2 S1	VALMONT ST	TUBULAR STEEL	5	GALVANISED	TUBULAR
46110199	CLIPSON CREST	Barton upon Humber Parish	502463	421048	3	7002	00211808	28/02/2018 00:00	5	2	LESS THAN 30MPH	BACK OF FOOTPATH	0	POST TOP	NOT APPLICABLE	RIGID COLUMN	URBIS	AXIA 2 S1	VALMONT ST	TUBULAR STEEL	6	GALVANISED	TUBULAR
46110199	CLIPSON CREST	Barton upon Humber Parish	502418	421108	3	7018	00211824	28/02/2018 00:00	5	2	NOT ON A ROAD	BACK OF FOOTPATH	0	POST TOP	NOT APPLICABLE	MID HINGED	URBIS	AXIA 2 S1	VALMONT ST	SHEET STEEL	5	GALVANISED	LEVEN
46110199	CLIPSON CREST	Barton upon Humber Parish	502464	421014	4	7003	00211809	28/02/2018 00:00	5	2	LESS THAN 30MPH	BACK OF FOOTPATH	0	POST TOP	NOT APPLICABLE	RIGID COLUMN	URBIS	AXIA 2 S1	VALMONT ST	TUBULAR STEEL	6	GALVANISED	TUBULAR
46110199	CLIPSON CREST	Barton upon Humber Parish	502443	420998	5	7004	00211810	28/02/2018 00:00	5	2	LESS THAN 30MPH	BACK OF FOOTPATH	0	POST TOP	NOT APPLICABLE	RIGID COLUMN	URBIS	AXIA 2 S1	VALMONT ST	TUBULAR STEEL	6	GALVANISED	TUBULAR
46110199	CLIPSON CREST	Barton upon Humber Parish	502418	421004	6	7005	00211811	28/02/2018 00:00	5	2	LESS THAN 30MPH	BACK OF FOOTPATH	0	POST TOP	NOT APP

46110234	CURLEW CROFT	Scunthorpe	491974.8	408087.18	1	7001	04200755	01/04/2008 00:00	3	2	LESS THAN 30MPH	BACK OF FOOTPATH	0	POST TOP	NOT APPLICABLE	RIGID COLUMN	WRTL	ARC050	MALLATITE	TUBULAR STEEL	5	GALVANISED	TUBULAR
46110234	CURLEW CROFT	Scunthorpe	491982.9	408080.96	2	7002	04200756	01/04/2008 00:00	3	2	LESS THAN 30MPH	BACK OF FOOTPATH	0	POST TOP	NOT APPLICABLE	RIGID COLUMN	WRTL	ARC050	MALLATITE	TUBULAR STEEL	5	GALVANISED	TUBULAR
46110235	AVOCET MEWS	Scunthorpe	491925.51	408038.4	1	7001	04200749	01/04/2008 00:00	3	2	LESS THAN 30MPH	BACK OF FOOTPATH	0	POST TOP	NOT APPLICABLE	RIGID COLUMN	WRTL	ARC050	MALLATITE	TUBULAR STEEL	5	GALVANISED	TUBULAR
46110236	LAPWING WAY	Scunthorpe	491799.12	408029.41	1	7001	04200750	01/04/2008 00:00	3	2	LESS THAN 30MPH	BACK OF FOOTPATH	0	POST TOP	NOT APPLICABLE	RIGID COLUMN	WRTL	ARC070	MALLATITE	TUBULAR STEEL	6	GALVANISED	TUBULAR
46110236	LAPWING WAY	Scunthorpe	491826.7	408020.65	2	7002	04200751	01/04/2008 00:00	3	2	LESS THAN 30MPH	BACK OF FOOTPATH	0	POST TOP	NOT APPLICABLE	RIGID COLUMN	WRTL	ARC070	MALLATITE	TUBULAR STEEL	6	GALVANISED	TUBULAR
46110236	LAPWING WAY	Scunthorpe	491855.03	408026.41	3	7003	04200752	01/04/2008 00:00	3	2	LESS THAN 30MPH	BACK OF FOOTPATH	0	POST TOP	NOT APPLICABLE	RIGID COLUMN	WRTL	ARC070	MALLATITE	TUBULAR STEEL	6	GALVANISED	TUBULAR
46110236	LAPWING WAY	Scunthorpe	491867	408018	4	7004	04200753	01/04/2008 00:00	3	2	LESS THAN 30MPH	BACK OF FOOTPATH	0	POST TOP	NOT APPLICABLE	RIGID COLUMN	WRTL	ARC050	MALLATITE	TUBULAR STEEL	5	GALVANISED	TUBULAR
46110236	LAPWING WAY	Scunthorpe	491869	408049	5	7005	04200754	01/04/2008 00:00	3	2	LESS THAN 30MPH	BACK OF FOOTPATH	0	POST TOP	NOT APPLICABLE	RIGID COLUMN	WRTL	ARC070	MALLATITE	TUBULAR STEEL	6	GALVANISED	TUBULAR
46110237	GREBE MEWS	Scunthorpe	491861.39	408068.29	1	7001	04200785	01/04/2008 00:00	3	2	LESS THAN 30MPH	BACK OF FOOTPATH	0	POST TOP	NOT APPLICABLE	RIGID COLUMN	WRTL	ARC070	MALLATITE	TUBULAR STEEL	6	GALVANISED	TUBULAR
46110237	GREBE MEWS	Scunthorpe	491880.46	408078.47	2	7002	04200786	01/04/2008 00:00	3	2	LESS THAN 30MPH	BACK OF FOOTPATH	0	POST TOP	NOT APPLICABLE	RIGID COLUMN	WRTL	ARC070	MALLATITE	TUBULAR STEEL	6	GALVANISED	TUBULAR
46110237	GREBE MEWS	Scunthorpe	491852.64	408085.47	3	7003	04200787	01/04/2008 00:00	3	2	LESS THAN 30MPH	BACK OF FOOTPATH	0	POST TOP	NOT APPLICABLE	RIGID COLUMN	WRTL	ARC070	MALLATITE	TUBULAR STEEL	6	GALVANISED	TUBULAR
46110238	LINNET GARTH	Scunthorpe	491908.77	408083.95	1	7001	04200744	01/04/2008 00:00	3	2	LESS THAN 30MPH	BACK OF FOOTPATH	0	POST TOP	NOT APPLICABLE	RIGID COLUMN	WRTL	ARC070	MALLATITE	TUBULAR STEEL	6	GALVANISED	TUBULAR
46110238	LINNET GARTH	Scunthorpe	491914.53	408103.88	2	7002	04200745	01/04/2008 00:00	3	2	LESS THAN 30MPH	BACK OF FOOTPATH	0	POST TOP	NOT APPLICABLE	RIGID COLUMN	WRTL	ARC070	MALLATITE	TUBULAR STEEL	6	GALVANISED	TUBULAR
46110238	LINNET GARTH	Scunthorpe	491918	408130	3	7003	04200746	01/04/2008 00:00	3	2	LESS THAN 30MPH	BACK OF FOOTPATH	0	POST TOP	NOT APPLICABLE	RIGID COLUMN	WRTL	ARC070	MALLATITE	TUBULAR STEEL	6	GALVANISED	TUBULAR
46110238	LINNET GARTH	Scunthorpe	491892.23	408132.71	4	7004	04200747	01/04/2008 00:00	3	2	LESS THAN 30MPH	BACK OF FOOTPATH	0	POST TOP	NOT APPLICABLE	RIGID COLUMN	WRTL	ARC070	MALLATITE	TUBULAR STEEL	6	GALVANISED	TUBULAR
46110238	LINNET GARTH	Scunthorpe	491871.79	408138.19	5	7005	04200748	01/04/2008 00:00	3	2	LESS THAN 30MPH	BACK OF FOOTPATH	0	POST TOP	NOT APPLICABLE	RIGID COLUMN	WRTL	ARC070	MALLATITE	TUBULAR STEEL	6	GALVANISED	TUBULAR
46110239	WHIMBREL CHASE	Scunthorpe	491711.6	407957.9	1	7000	00207285	01/04/2005 00:00	3	2	LESS THAN 30MPH	BACK OF FOOTPATH	1000	SINGLE ARM	NOT APPLICABLE	RIGID COLUMN	URBIS	AXIA 2 S1	VALMONT ST	SHEET STEEL	10	GALVANISED	THAMES
46110239	WHIMBREL CHASE	Scunthorpe	491788.76	408102.35	10	7009	04200740	01/04/2008 00:00	3	2	LESS THAN 30MPH	BACK OF FOOTPATH	0	POST TOP	NOT APPLICABLE	RIGID COLUMN	WRTL	ARC070	MALLATITE	TUBULAR STEEL	6	GALVANISED	TUBULAR
46110239	WHIMBREL CHASE	Scunthorpe	491806.35	408109.56	11	7010	04200741	01/04/2008 00:00	3	2	LESS THAN 30MPH	BACK OF FOOTPATH	0	POST TOP	NOT APPLICABLE	RIGID COLUMN	WRTL	ARC070	MALLATITE	TUBULAR STEEL	6	GALVANISED	TUBULAR
46110239	WHIMBREL CHASE	Scunthorpe	491814.35	408136.92	12	7011	04200742	01/04/2008 00:00	3	2	LESS THAN 30MPH	BACK OF FOOTPATH	0	POST TOP	NOT APPLICABLE	RIGID COLUMN	WRTL	ARC070	MALLATITE	TUBULAR STEEL	6	GALVANISED	TUBULAR
46110239	WHIMBREL CHASE	Scunthorpe	491843.83	408130.9	13	7012	04200743	01/04/2008 00:00	3	2	LESS THAN 30MPH	BACK OF FOOTPATH	0	POST TOP	NOT APPLICABLE	RIGID COLUMN	WRTL	ARC070	MALLATITE	TUBULAR STEEL	6	GALVANISED	TUBULAR
46110239	WHIMBREL CHASE	Scunthorpe	491740.62	407945.65	2	7001	04200732	01/04/2008 00:00	3	2	LESS THAN 30MPH	BACK OF FOOTPATH	0	POST TOP	NOT APPLICABLE	RIGID COLUMN	WRTL	ARC070	MALLATITE	TUBULAR STEEL	6	GALVANISED	TUBULAR
46110239	WHIMBREL CHASE	Scunthorpe	491767.5	407956.27	3	7002	04200733	01/04/2008 00:00	3	2	LESS THAN 30MPH	BACK OF FOOTPATH	0	POST TOP	NOT APPLICABLE	RIGID COLUMN	WRTL	ARC070	MALLATITE	TUBULAR STEEL	6	GALVANISED	TUBULAR
46110239	WHIMBREL CHASE	Scunthorpe	491787.71	407977.45	4	7003	04200734	01/04/2008 00:00	3	2	LESS THAN 30MPH	BACK OF FOOTPATH	0	POST TOP	NOT APPLICABLE	RIGID COLUMN	WRTL	ARC070	MALLATITE	TUBULAR STEEL	6	GALVANISED	TUBULAR
46110239	WHIMBREL CHASE	Scunthorpe	491795.46	408001.09	5	7004	04200735	01/04/2008 00:00	3	2	LESS THAN 30MPH	BACK OF FOOTPATH	0	POST TOP	NOT APPLICABLE	RIGID COLUMN	WRTL	ARC070	MALLATITE	TUBULAR STEEL	6	GALVANISED	TUBULAR
46110239	WHIMBREL CHASE	Scunthorpe	491787.53	408023.4	6	7005	04200736	01/04/2008 00:00	3	2	LESS THAN 30MPH	BACK OF FOOTPATH	0	POST TOP	NOT APPLICABLE	RIGID COLUMN	WRTL	ARC070	MALLATITE	TUBULAR STEEL	6	GALVANISED	TUBULAR
46110239	WHIMBREL CHASE	Scunthorpe	491779.35	408053.84	7	7006	04200737	01/04/2008 00:00	3	2	LESS THAN 30MPH	BACK OF FOOTPATH	0	POST TOP	NOT APPLICABLE	RIGID COLUMN	WRTL	ARC070	MALLATITE	TUBULAR STEEL	6	GALVANISED	TUBULAR
46110239	WHIMBREL CHASE	Scunthorpe	491768.35	408062.46	8	7007	04200738	01/04/2008 00:00	3	2	LESS THAN 30MPH	BACK OF FOOTPATH	0	POST TOP	NOT APPLICABLE	RIGID COLUMN	WRTL	ARC070	MALLATITE	TUBULAR STEEL	6	GALVANISED	TUBULAR
46110239	WHIMBREL CHASE	Scunthorpe	491786	408077	9	7008	04200739	01/04/2008 00:00	3	2	LESS THAN 30MPH	BACK OF FOOTPATH	0	POST TOP	NOT APPLICABLE	RIGID COLUMN	WRTL	ARC070	MALLATITE	TUBULAR STEEL	6	GALVANISED	TUBULAR
46110240	HERON GATE	Scunthorpe	491853.28	408228.05	1	7001	04200774	01/04/2008 00:00	3	2	LESS THAN 30MPH	BACK OF FOOTPATH	0	POST TOP	NOT APPLICABLE	RIGID COLUMN	URBIS	ARC070	MALLATITE	TUBULAR STEEL	6	GALVANISED	TUBULAR
46110240	HERON GATE	Scunthorpe	491842.67	408203.95	2	7002	04200775	01/04/2008 00:00	3	2	LESS THAN 30MPH	BACK OF FOOTPATH	0	POST TOP	NOT APPLICABLE	RIGID COLUMN	WRTL	ARC070	MALLATITE	TUBULAR STEEL	6	GALVANISED	TUBULAR
46110240	HERON GATE	Scunthorpe	491852.33	408173.52	3	7003	04200776	01/04/2008 00:00	3	2	LESS THAN 30MPH	BACK OF FOOTPATH	0	POST TOP	NOT APPLICABLE	RIGID COLUMN	WRTL	ARC070	MALLATITE	TUBULAR STEEL	6	GALVANISED	TUBULAR
46110240	HERON GATE	Scunthorpe	491842.84	408151.96	4	7004	04200777	01/04/2008 00:00	3	2	LESS THAN 30MPH	BACK OF FOOTPATH	0	POST TOP	NOT APPLICABLE	RIGID COLUMN	WRTL	ARC070	MALLATITE	TUBULAR STEEL	6	GALVANISED	TUBULAR
46110241	FUSILIER WAY	Kirton in Lindsey Parish	494114	398825	1	7000	00207286	01/04/2008 00:00	1	3	LESS THAN 30MPH	BACK OF FOOTPATH	0	POST TOP	NOT APPLICABLE	RIGID COLUMN	URBIS	AXIA 2 S1	MALLATITE	TUBULAR STEEL	5	GALVANISED	TUBULAR
46110241	FUSILIER WAY	Kirton in Lindsey Parish	494110.6	398854.2	2	7001	00207287	01/04/2008 00:00	1	3	LESS THAN 30MPH	BACK OF FOOTPATH	0	POST TOP	NOT APPLICABLE	RIGID COLUMN	URBIS	AXIA 2 S1	MALLATITE	TUBULAR STEEL	5	GALVANISED	TUBULAR
46110241	FUSILIER WAY	Kirton in Lindsey Parish	494136	398859	3	7002	00207288	01/04/2008 00:00	1	3	LESS THAN 30MPH	BACK OF FOOTPATH	0	POST TOP	NOT APPLICABLE	RIGID COLUMN	URBIS	AXIA 2 S1	MALLATITE	TUBULAR STEEL	5	GALVANISED	TUBULAR
46110241	FUSILIER WAY	Kirton in Lindsey Parish	494129	398903	4	7003	00207289	01/04/2008 00:00	1	3	LESS THAN 30MPH	BACK OF FOOTPATH	0	POST TOP	NOT APPLICABLE	RIGID COLUMN	URBIS	AXIA 2 S1	MALLATITE	TUBULAR STEEL	5	GALVANISED	TUBULAR
46110241	FUSILIER WAY	Kirton in Lindsey Parish	494135	398918	5	7004	00207290	01/04/2008 00:00	1	3	LESS THAN 30MPH	BACK OF FOOTPATH	0	POST TOP	NOT APPLICABLE	RIGID COLUMN	URBIS	AXIA 2 S1	MALLATITE	TUBULAR STEEL	5	GALVANISED	TUBULAR
46110241	FUSILIER WAY	Kirton in Lindsey Parish	494116	398941	6	7005	00207291	01/04/2008 00:00	1	3	LESS THAN 30MPH	BACK OF FOOTPATH	0	POST TOP	NOT APPLICABLE	RIGID COLUMN	URBIS	AXIA 2 S1	MALLATITE	TUBULAR STEEL	5	GALVANISED	TUBULAR
46110241	FUSILIER WAY	Kirton in Lindsey Parish	494113	398928	7	7006	00207292	01/04/2008 00:00	1	3	LESS THAN 30MPH	BACK OF FOOTPATH	0	POST TOP	NOT APPLICABLE	RIGID COLUMN	URBIS	AXIA 2 S1	MALLATITE	TUBULAR STEEL	5	GALVANISED	TUBULAR
46110245	TAYLOR COURT	Scunthorpe	488859	411511	1	7000	00207293	01/04/2009 00:00	4	4	LESS THAN 30MPH	BACK OF FOOTPATH	0	POST TOP	NOT APPLICABLE	RIGID COLUMN	URBIS	AXIA 2 S1	MALLATITE	TUBULAR STEEL	6	GALVANISED	TUBULAR
46110245	TAYLOR COURT	Scunthorpe	488830	411501	2	7001	00207294	01/04/2009 00:00	4	4	LESS THAN 30MPH	BACK OF FOOTPATH	0	POST TOP	NOT APPLICABLE	RIGID COLUMN	URBIS	AXIA 2 S1	MALLATITE	TUBULAR STEEL	6	GALVANISED	TUBULAR
46110245	TAYLOR COURT	Scunthorpe	488801	411504	3	7002	00207295	01/04/2009 00:00	4	4	LESS THAN 30MPH	BACK OF FOOTPATH	0	POST TOP	NOT APPLICABLE	RIGID COLUMN	URBIS	AXIA 2 S1	MALLATITE	TUBULAR STEEL	6	GALVANISED	TUBULAR
46110248	ENNERDALE LANE	Scunthorpe	491247.1	408302.2	1	7000	00207296	01/04/2010 00:00	1	3	LESS THAN 30MPH	VERGE	0	POST TOP	NOT APPLICABLE	RIGID COLUMN	URBIS	AXIA 2 S1	MALLATITE	TUBULAR STEEL	6	GALVANISED	TUBULAR
46110248	ENNERDALE LANE	Scunthorpe	491347.92	408101.16	10	7009	04200563	01/04/2015 00:00	1	3	LESS THAN 30MPH	BACK OF FOOTPATH	0	POST TOP	NOT APPLICABLE	RIGID COLUMN	URBIS	AXIA 2 S1	MALLATITE	TUBULAR STEEL	6	GALVANISED	TUBULAR
46110248	ENNERDALE LANE	Scunthorpe	491318.59	408096.51	11	7010	04200564	01/04/2015 00:00	1	3	LESS THAN 30MPH	VERGE	0	POST TOP	NOT APPLICABLE	RIGID COLUMN	URBIS	AXIA 2 S1	MALLATITE	TUBULAR STEEL	6	GALVANISED	TUBULAR
46110248	ENNERDALE LANE	Scunthorpe	491283.34	408102.02	12	7011	04200609	01/04/2015 00:00	1	3	LESS THAN 30MPH	BACK OF FOOTPATH	0	POST TOP	NOT APPLICABLE	RIGID COLUMN	URBIS	AXIA 2 S1	MALLATITE	TUBULAR STEEL	6	GALVANISED	TUBULAR
46110248	ENNERDALE LANE	Scunthorpe	491255.36	408092.96	13	7012	04200610	01/04/2015 00:00	1	3	LESS THAN 30MPH	BACK OF FOOTPATH	0	POST TOP	NOT APPLICABLE	RIGID COLUMN	URBIS	AXIA 2 S1	MALLATITE	TUBULAR STEEL	6	GALVANISED	TUBULAR
46110248	ENNERDALE LANE	Scunthorpe	491222.95	408097.86	14	7013	04200611	01/04/2016 00:00	1	3	LESS THAN 30MPH	VERGE	0	POST TOP	NOT APPLICABLE	RIGID COLUMN	URBIS	AXIA 2 S1	MALLATITE	TUBULAR STEEL	6	GALVANISED	TUBULAR
46110248	ENNERDALE LANE	Scunthorpe	491190.91	408089.64	15	7014	04200612	01/04/2016 00:00	1	3	LESS THAN 30MPH	VERGE	0	POST TOP	NOT APPLICABLE	RIGID COLUMN	URBIS	AXIA 2 S1	MALLATITE	TUBULAR STEEL	6	GALVANISED	TUBULAR
46110248	ENNERDALE LANE	Scunthorpe	491187.96	408117.91	16	7015	04200613	01/04/2016 00:00	1	3	LESS THAN 30MPH	VERGE	0	POST TOP	NOT APPLICABLE	RIGID COLUMN	URBIS	AXIA 2 S1	MALLATITE	TUBULAR STEEL	6	GALVANISED	TUBULAR
46110248	ENNERDALE LANE	Scunthorpe	491161.55	408087.71	17	7016	04200614	01/04/2016 00:00	1	3	LESS THAN 30MPH	VERGE	0	POST TOP	NOT APPLICABLE	RIGID COLUMN	URBIS	AXIA 2 S1	MALLATITE	TUBULAR STEEL	6	GALVANISED	TUBULAR
46110248	ENNERDALE LANE	Scunthorpe	491276.2	408306.9	2	7001	00207297	01/04/2010 00:00	1	3	LESS THAN 30MPH	VERGE	0	POST TOP	NOT APPLICABLE	RIGID COLUMN	URBIS	AXIA 2 S1	MALLATITE	TUBULAR STEEL	6	GALVANISED	TUBULAR
46110248	ENNERDALE LANE	Scunthorpe	491293.7	408306.7	3	7002	00207298	01/04/2010 00:00	1	3	LESS THAN 30MPH	VERGE	0	POST TOP	NOT APPLICABLE	RIGID COLUMN	URBIS	AXIA 2 S1	MALLATITE	TUBULAR STEEL	6	GALVANISED	TUBULAR
46110248	ENNERDALE LANE	Scunthorpe	491311	408269.3	4	7003	00207299	01/04/2010 00:00	1	3	LESS THAN 30MPH	VERGE	0	POST TOP	NOT APPLICABLE	RIGID COLUMN	URBIS	AXIA 2 S1	MALLATITE	TUBULAR STEEL	6	GALVANISED	TUBULAR
46110248	ENNERDALE LANE	Scunthorpe	491309	408236.9	5	7004	00207300	28/09/2023 00:00	1	3	LESS THAN 30MPH	VERGE	0	POST TOP	NOT APPLICABLE	RIGID COLUMN	URBIS	AXIA 2 S1	MALLATITE	TUBULAR STEEL	6	GALVANISED	TUBULAR
46110248	ENNERDALE LANE	Scunthorpe	491320.6	408212.2	6	7005	00207301	01/04/2010 00:00	1	3	LESS THAN 30MPH	VERGE	0	POST TOP	NOT APPLICABLE	RIGID COLUMN	URBIS	AXIA 2 S1	MALLATITE	TUBULAR STEEL	6	GALVANISED	TUBULAR
46110248	ENNERDALE LANE	Scunthorpe	491334.52	408192.48	7	7006	04200560	01/04/2015 00:00	1	3	LESS THAN 30MPH	BACK OF FOOTPATH	0	POST TOP	NOT APPLICABLE	RIGID COLUMN	URBIS	AXIA 2 S1	CU	TUBULAR STEEL	6	GALVANISED	STEPPED TUBULAR
46110248	ENNERDALE LANE	Scunthorpe	491329.21	408162.12	8	7007	04200561	01/04/2015 00:00	1	3	LESS THAN 30MPH	BACK OF FOOTPATH	0	POST TOP	NOT APPLICABLE	RIGID COLUMN	URBIS	AXIA 2 S1	CU	TUBULAR STEEL	6	GALVANISED	STEPPED TUBULAR
46110248	ENNERDALE LANE	Scunthorpe	491348.79	408133.04	9	7008	04200562	01/04/2015 00:00	1	3	LESS THAN 30MPH	BACK OF FOOTPATH	0	POST TOP	NOT APPLICABLE	RIGID COLUMN	URBIS	AXIA 2 S1	MALLATITE	TUBULAR STEEL	6	GALVANISED	TUBULAR
46110251	MILL VIEW	Barton upon Humber Parish	502739	422564	1	7000	00207302	01/04/2009 00:00	5	2	LESS THAN 30MPH	BACK OF FOOTPATH	0	POST TOP	NOT APPLICABLE	RIGID COLUMN	URBIS	AXIA 2 S1	MALLATITE	TUBULAR STEEL	5	GALVANISED	TUBULAR
46110251	MILL VIEW	Barton upon Humber Parish	502753.1	422586.8	2	7001	00207303	01/04/2009 00:00	5	2	LESS THAN 30MPH	BACK OF FOOTPATH	0	POST TOP	NOT APPLICABLE	RIGID COLUMN	URBIS	AXIA 2 S1	MALLATITE	TUBULAR STEEL	5	GALVANISED	TUBULAR
46110251	MILL VIEW	Barton upon Humber Parish	502773.4	422591.2	3	7002	00207304	01/04/2009 00:00	5	2	LESS THAN 30MPH	BACK OF FOOTPATH	0	POST TOP	NOT APPLICABLE	RIGID COLUMN	URBIS	AXIA 2 S1	MALLATITE	TUBULAR STEEL	5	GALVANISED	TUBULAR
46110251	MILL VIEW	Barton upon Humber Parish	502784	422608	4	7003	04200525	16/06/2020 00:00	5	2	LESS THAN 30MPH	VERGE	0	POST TOP	NOT APPLICABLE	RIGID COLUMN	URBIS	AXIA 2 S1	MALLATITE	TUBULAR STEEL	5	GALVANISED	TUBULAR
46110251	MILL VIEW	Barton upon Humber Parish	502782	422633	5	7004	04200526	16/06/2020 00:00	5	2	LESS THAN 30MPH	VERGE	0	POST TOP	NOT APPLICABLE	RIGID COLUMN	URBIS	AXIA 2 S1	MALLATITE	TUBULAR STEEL	5	GALVANISED	TUBULAR
46110251	MILL VIEW	Barton upon Humber Parish	502805	422627	6	7005	04200527	16/06/2020 00:00	5	2	LESS THAN 30MPH	VERGE	0	POST TOP	NOT APPLICABLE	RIGID COLUMN	URBIS	AXIA 2 S1	MALLATITE	TUBULAR STEEL	5	GALVANISED	TUBULAR
46110253	OLD SCHOOL CLOSE	Brigg Parish	500290	407669	1	7000	00207305	01/04/2010 00:00	2	3	LESS THAN 30MPH	BACK OF FOOTPATH	0	POST TOP	NOT APPLICABLE	RIGID COLUMN	URBIS	AXIA 2 S1	MALLATITE	TUBULAR STEEL	5	GALVANISED	TUBULAR
46110253	OLD SCHOOL CLOSE	Brigg Parish	500196	407702	10	7009	00207314	01/04/2010 00:00	2	3	LESS THAN 30MPH	BACK OF FOOTPATH	0	POST TOP	NOT APPLICABLE	RIGID COLUMN	URBIS	AXIA 2 S1	MALLATITE	TUBULAR STEEL	5	GALVANISED	TUBULAR
46110253	OLD SCHOOL CLOSE	Brigg Parish	500273	407693	2	7001	00207306	01/04/2010 00:00	2	3	LESS THAN 30MPH	BACK OF FOOTPATH	0	POST TOP	NOT APPLICABLE	RIGID COLUMN	URBIS	AXIA 2 S1	MALLATITE	TUBULAR STEEL	5	GALVANISED	TUBULAR
46110253	OLD SCHOOL CLOSE	Brigg Parish	500258	407723	3	7002	00207307	01/04/2010 00:00	2	3	LESS THAN 30MPH	BACK OF FOOTPATH	0	POST TOP	NOT APPLICABLE	RIGID COLUMN	URBIS	AXIA 2 S1	MALLATITE	TUBULAR STEEL	5	GALVANISED	TUBULAR
46110253	OLD SCHOOL CLOSE	Brigg Parish	500237	407733	4	7003	00207308	01/04/2010 00:00	2	3	LESS THAN 30MPH	BACK OF FOOTPATH	0	POST TOP	NOT APPLICABLE	RIGID COLUMN	URBIS	AXIA 2 S1	MALLATITE	TUBULAR STEEL	5	GALVANISED	TUBULAR
46110253	OLD SCHOOL CLOSE	Brigg Parish	500222	407744	5	7004	00207309	01/04/2010 00:00	2	3	LESS THAN 30MPH	BACK OF FOOTPATH	0	POST TOP	NOT APPLICABLE	RIGID COLUMN	URBIS	AXIA 2 S1	MALLATITE	TUBULAR STEEL	5	GALVANISED	TUBULAR
46110253	OLD SCHOOL CLOSE	Brigg Parish	500237	407752	6	7005	00207310	01/04/2010 00:00	2	3	LESS THAN 30MPH	BACK OF FOOTPATH	0	POST TOP	NOT APPLICABLE	RIGID COLUMN	URBIS	AXIA 2 S1	MALLATITE	TUBULAR STEEL	5	GALVANISED	TUBULAR
46110253	OLD SCHOOL CLOSE	Brigg Parish	500246	407713	7	7006	00207311	01/04/2010 00:00	2	3	LESS THAN 30MPH	BACK OF FOOTPATH	0	POST TOP	NOT APPLICABLE	RIGID COLUMN	URBIS	AXIA 2 S1	MALLATITE	TUBULAR STEEL	5	GALVANISED	TUBULAR
46110253	OLD SCHOOL CLOSE	Brigg Parish	500215	407703	8	7007	00207312	01/04/2010 00:00	2	3	LESS THAN 30MPH	BACK OF FOOTPATH	0	POST TOP	NOT APPLICABLE	RIGID COLUMN	URBIS	AXIA 2 S1	MALLATITE	TUBULAR STEEL	5	GALVANISED	TUBULAR
46110253	OLD SCHOOL CLOSE	Brigg Parish	500214	407689	9	7008	00207313	01/04/2010 00:00	2	3	LESS THAN 30MPH	BACK OF FOOTPATH	0	POST TOP	NOT APPLICABLE	RIGID COLUMN	URBIS	AXIA 2 S1	MALLATITE	TUBULAR STEEL	5	GALVANISED	TUBULAR
46110255	PINE PARK	Barton upon Humber Parish	502641.4	422824.5	1	7000	00207216	01/04/2008 00:00	5	2	LESS THAN 30MPH	BACK OF FOOTPATH	0	POST TOP	NOT APPLICABLE	RIGID COLUMN	URBIS	AXIA 2 S1	MALLATITE	TUBULAR STEEL	6	GALVANISED	TUBULAR
46110255	PINE PARK	Barton upon Humber Parish	502658.5	422828.2	2	7001	00207217	01/04/2008 00:00	5	2	LESS THAN 30MPH	BACK OF FOOTPATH	0	POST TOP	NOT APPLICABLE	RIGID COLUMN	URBIS	AXIA 2 S1	MALLATITE	TUBULAR STEEL	6	GALVANISED	TUBULAR
46110255	PINE PARK	Barton upon Humber Parish	502659.2	422857	3	7002	00207218	01/04/2008 00:00	5	2	LESS THAN 30MPH	BACK OF FOOTPATH	0	POST TOP	NOT APPLICABLE	RIGID COLUMN	URBIS	AXIA 2 S1	MALLATITE	TUBULAR STEEL	6	GALVANISED	TUBULAR
46110255	PINE PARK	Barton upon Humber Parish	502664.2	422887.2	4	7003	00207219	01/04/2008 00:00	5	2	LESS THAN 30MPH	BACK OF FOOTPATH	0	POST TOP	NOT APPLICABLE	RIGID COLUMN	URBIS	AXIA 2 S1	MALLATITE	TUBULAR STEEL	6	GALVANISED	TUBULAR
46110255	PINE PARK	Barton upon Humber Parish	502660.8	422915.2	5	7004	00207220	01/04/2008 00:00	5	2	LESS THAN 30MPH	BACK OF FOOTPATH	0	POST TOP	NOT APPLICABLE	RIGID COLUMN	URBIS	AXIA 2 S1	MALLATITE	TUBULAR STEEL	6	GALVANISED	TUBULAR
46110255	PINE PARK	Barton upon Humber Parish	502683	422916.1	6	7005	00207221	01/04/2008 00:00	5	2	LESS THAN 30MPH	BACK OF FOOTPATH	0	POST TOP	NOT APPLICABLE	RIGID COLUMN	URBIS	AXIA 2 S1	MALLATITE	TUBULAR STEEL	6	GALVANISED	TUBULAR
46110259	WEST BUTTERWICK ROAD	Belton Parish	480984.82	406737.02	1	7000	00207315	01/04/1995 00:00	5	3	LESS THAN 30MPH	BACK OF FOOTPATH	0	POST TOP	NOT APPLICABLE	RIGID COLUMN	URBIS	AXIA 2 S1	PETITJEAN	SHEET STEEL	5	GALVANISED	NIDD
46110259	WEST BUTTERWICK ROAD	Belton Parish	480990.42	406696.81	2	7001	00207316	01/04/1995 00:00	5	3	LESS THAN 30MPH	BACK OF FOOTPATH	0	POST TOP	NOT APPLICABLE	RIGID COLUMN	URBIS	AXIA 2 S1	PETITJEAN	SHEET STEEL	5	GALVANISED	NIDD
46110259	WEST BUTTERWICK ROAD	Belton Parish	480995.7	406665.49	3	7002	00207317	01/04/1995 00:00	5	3	LESS THAN 30MPH	BACK OF FOOTPATH	0	POST TOP	NOT APPLICABLE	RIGID COLUMN	URBIS	AXIA 2 S1	PETITJEAN	SHEET STEEL	5	GALVANISED	NIDD
46110259	WEST BUTTERWICK ROAD	Belton Parish	481000.85	406635.57	4	7003	00207318	01/04/1995 00:00	5	3	LESS THAN 30MPH	BACK OF FOOTPATH	0	POST TOP	NOT APPLICABLE	RIGID COLUMN	URBIS	AXIA 2 S1	PETITJEAN	SHEET STEEL	5	GALVANISED	NIDD
46110259	WEST BUTTERWICK ROAD	Belton Parish	481007.05	406595.84	5	7004	00207319	01/04/1995 00:00	5	3	LESS THAN 30MPH	BACK OF FOOTPATH	0	POST TOP	NOT APPLICABLE	RIGID COLUMN	URBIS	AXIA 2 S1	PETITJEAN	SHEET STEEL	5	GALVANISED	NIDD
46110259	WEST BUTTERWICK ROAD	Belton Parish	481013.74	406554.07	6	7005	00207320	01/04/1995 00:00	5	3	LESS THAN 30MPH	BACK OF FOOTPATH	0	POST TOP	NOT APPLICABLE	RIGID COLUMN	URBIS	AXIA 2 S1	PETITJEAN

46110291	WOODCROSS AVENUE	Scunthorpe	491039.58	407658.45	17	7018	00205368	01/04/2005 00:00	1	3	LESS THAN 30MPH	BACK OF FOOTPATH	0	POST TOP	NOT APPLICABLE	RIGID COLUMN	URBIS	AXIA 2 S1	T AND L	TUBULAR STEEL	6	GALVANISED	STEPPED TUBULAR
46110291	WOODCROSS AVENUE	Scunthorpe	490827	407532	2	7010	04200039	01/04/2006 00:00	1	3	LESS THAN 30MPH	BACK OF FOOTPATH	0	POST TOP	NOT APPLICABLE	RIGID COLUMN	URBIS	AXIA 2 S1	T AND L	TUBULAR STEEL	6	GALVANISED	TUBULAR
46110291	WOODCROSS AVENUE	Scunthorpe	490850	407517	3	7009	04200038	01/04/2006 00:00	1	3	LESS THAN 30MPH	BACK OF FOOTPATH	0	POST TOP	NOT APPLICABLE	RIGID COLUMN	URBIS	AXIA 2 S1	T AND L	TUBULAR STEEL	6	GALVANISED	TUBULAR
46110291	WOODCROSS AVENUE	Scunthorpe	490886	407520	4	7008	04200037	01/04/2006 00:00	1	3	LESS THAN 30MPH	BACK OF FOOTPATH	0	POST TOP	NOT APPLICABLE	RIGID COLUMN	URBIS	AXIA 2 S1	T AND L	TUBULAR STEEL	6	GALVANISED	TUBULAR
46110291	WOODCROSS AVENUE	Scunthorpe	490914	407527	5	7007	04200036	01/04/2006 00:00	1	3	LESS THAN 30MPH	BACK OF FOOTPATH	0	POST TOP	NOT APPLICABLE	RIGID COLUMN	URBIS	AXIA 2 S1	T AND L	TUBULAR STEEL	6	GALVANISED	TUBULAR
46110291	WOODCROSS AVENUE	Scunthorpe	490946	407538	6	7006	04200035	01/04/2006 00:00	1	3	LESS THAN 30MPH	BACK OF FOOTPATH	0	POST TOP	NOT APPLICABLE	RIGID COLUMN	URBIS	AXIA 2 S1	T AND L	TUBULAR STEEL	6	GALVANISED	TUBULAR
46110291	WOODCROSS AVENUE	Scunthorpe	490968	407536	7	7005	04200034	01/04/2005 00:00	1	3	NOT ON A ROAD	BACK OF FOOTPATH	0	POST TOP	NOT APPLICABLE	MID HINGED	URBIS	AXIA 2 S1	VALMONT ST	SHEET STEEL	6	GALVANISED	LEVEN
46110291	WOODCROSS AVENUE	Scunthorpe	490960	407556	8	7004	04200033	01/04/2006 00:00	1	3	LESS THAN 30MPH	BACK OF FOOTPATH	0	POST TOP	NOT APPLICABLE	RIGID COLUMN	URBIS	AXIA 2 S1	T AND L	TUBULAR STEEL	6	GALVANISED	TUBULAR
46110291	WOODCROSS AVENUE	Scunthorpe	490974	407574	9	7003	04200032	01/04/2005 00:00	1	3	LESS THAN 30MPH	BACK OF PATH	0	POST TOP	NOT APPLICABLE	RIGID COLUMN	URBIS	AXIA 2 S1	T AND L	TUBULAR STEEL	6	GALVANISED	TUBULAR
46110292	KIMBERLEY COURT	Scunthorpe	490960.09	407629.54	1	7001	00205344	01/04/2006 00:00	1	3	LESS THAN 30MPH	BACK OF FOOTPATH	0	POST TOP	NOT APPLICABLE	RIGID COLUMN	URBIS	AXIA 2 S1	T AND L	TUBULAR STEEL	6	GALVANISED	STEPPED TUBULAR
46110292	KIMBERLEY COURT	Scunthorpe	490939.55	407632.59	2	7002	00205345	01/04/2006 00:00	1	3	LESS THAN 30MPH	BACK OF FOOTPATH	0	POST TOP	NOT APPLICABLE	RIGID COLUMN	URBIS	AXIA 2 S1	T AND L	TUBULAR STEEL	6	GALVANISED	STEPPED TUBULAR
46110292	KIMBERLEY COURT	Scunthorpe	490919.62	407614.62	3	7003	00205346	01/04/2006 00:00	1	3	LESS THAN 30MPH	BACK OF FOOTPATH	0	POST TOP	NOT APPLICABLE	RIGID COLUMN	URBIS	AXIA 2 S1	T AND L	TUBULAR STEEL	6	GALVANISED	STEPPED TUBULAR
46110293	SAFFRE CLOSE	Winterton Parish	492420.06	418500.53	1	7000	00207453	01/04/2002 00:00	1	1	LESS THAN 30MPH	BACK OF FOOTPATH	0	POST TOP	NOT APPLICABLE	RIGID COLUMN	URBIS	AXIA 2 S1	MALLATITE	TUBULAR STEEL	5	GALVANISED	STEPPED TUBULAR
46110293	SAFFRE CLOSE	Winterton Parish	492414.74	418527.8	2	7001	00207454	01/04/2002 00:00	1	1	LESS THAN 30MPH	BACK OF FOOTPATH	0	POST TOP	NOT APPLICABLE	RIGID COLUMN	URBIS	AXIA 2 S1	MALLATITE	TUBULAR STEEL	5	GALVANISED	STEPPED TUBULAR
46110293	SAFFRE CLOSE	Winterton Parish	492413.71	418561.03	3	7002	00207455	01/04/2002 00:00	1	1	LESS THAN 30MPH	BACK OF FOOTPATH	0	POST TOP	NOT APPLICABLE	RIGID COLUMN	URBIS	AXIA 2 S1	MALLATITE	TUBULAR STEEL	5	GALVANISED	STEPPED TUBULAR
46110293	SAFFRE CLOSE	Winterton Parish	492415.6	418587.83	4	7003	00207456	01/04/2002 00:00	1	1	LESS THAN 30MPH	BACK OF FOOTPATH	0	POST TOP	NOT APPLICABLE	RIGID COLUMN	URBIS	AXIA 2 S1	MALLATITE	TUBULAR STEEL	5	GALVANISED	STEPPED TUBULAR
46110293	SAFFRE CLOSE	Winterton Parish	492396.97	418613.02	5	7004	00207457	01/04/2002 00:00	1	1	LESS THAN 30MPH	BACK OF FOOTPATH	0	POST TOP	NOT APPLICABLE	RIGID COLUMN	URBIS	AXIA 2 S1	MALLATITE	TUBULAR STEEL	5	GALVANISED	STEPPED TUBULAR
46110293	SAFFRE CLOSE	Winterton Parish	492413.01	418617.56	6	7005	00207458	01/04/2002 00:00	1	1	LESS THAN 30MPH	BACK OF FOOTPATH	0	POST TOP	NOT APPLICABLE	RIGID COLUMN	URBIS	AXIA 2 S1	MALLATITE	TUBULAR STEEL	5	GALVANISED	STEPPED TUBULAR
46110296	OLD HALL LANE	Roxby Cum Risby Parish	492360.32	417120.42	1	7000	00207459	01/04/1995 00:00	1	1	LESS THAN 30MPH	VERGE	0	POST TOP	NOT APPLICABLE	RIGID COLUMN	URBIS	AXIA 2 S1	MALLATITE	TUBULAR STEEL	5	GALVANISED	STEPPED TUBULAR
46110296	OLD HALL LANE	Roxby Cum Risby Parish	492361.66	417104.29	2	7001	00207460	01/04/1995 00:00	1	1	LESS THAN 30MPH	VERGE	0	POST TOP	NOT APPLICABLE	RIGID COLUMN	URBIS	AXIA 2 S1	MALLATITE	TUBULAR STEEL	5	GALVANISED	STEPPED TUBULAR
46110296	OLD HALL LANE	Roxby Cum Risby Parish	492354.4	417070.69	3	7002	00207461	01/04/1995 00:00	1	1	LESS THAN 30MPH	VERGE	0	POST TOP	NOT APPLICABLE	RIGID COLUMN	URBIS	AXIA 2 S1	MALLATITE	TUBULAR STEEL	5	GALVANISED	STEPPED TUBULAR
46110296	OLD HALL LANE	Roxby Cum Risby Parish	492355.84	417029.42	4	7003	00207462	01/04/1995 00:00	1	1	LESS THAN 30MPH	VERGE	0	POST TOP	NOT APPLICABLE	RIGID COLUMN	URBIS	AXIA 2 S1	MALLATITE	TUBULAR STEEL	5	GALVANISED	STEPPED TUBULAR
46110296	OLD HALL LANE	Roxby Cum Risby Parish	492341.59	417022.16	5	7004	00207463	01/04/1995 00:00	1	1	LESS THAN 30MPH	VERGE	0	POST TOP	NOT APPLICABLE	RIGID COLUMN	URBIS	AXIA 2 S1	MALLATITE	TUBULAR STEEL	5	GALVANISED	STEPPED TUBULAR
46110297	ST NICHOLAS COURT	Scunthorpe	491019.6	407608.87	1	7001	00205347	01/04/2005 00:00	1	3	LESS THAN 30MPH	BACK OF FOOTPATH	0	POST TOP	NOT APPLICABLE	RIGID COLUMN	URBIS	AXIA 2 S1	MALLATITE	TUBULAR STEEL	6	GALVANISED	STEPPED TUBULAR
46110297	ST NICHOLAS COURT	Scunthorpe	491009.57	407579.07	2	7002	00205348	01/04/2005 00:00	1	3	LESS THAN 30MPH	BACK OF FOOTPATH	0	POST TOP	NOT APPLICABLE	RIGID COLUMN	URBIS	AXIA 2 S1	NUMANA	TUBULAR STEEL	6	GALVANISED	STEPPED TUBULAR
46110297	ST NICHOLAS COURT	Scunthorpe	491043.32	407602.2	3	7003	00205349	01/04/2005 00:00	1	3	LESS THAN 30MPH	BACK OF FOOTPATH	0	POST TOP	NOT APPLICABLE	RIGID COLUMN	URBIS	AXIA 2 S1	NUMANA	TUBULAR STEEL	6	GALVANISED	STEPPED TUBULAR
46110298	COLLUM HOUSE ROAD	Scunthorpe	489877.56	408722.81	1	7000	00207464	01/04/2005 00:00	2	4	LESS THAN 30MPH	VERGE	0	POST TOP	NOT APPLICABLE	RIGID COLUMN	URBIS	AXIA 2 S1	MALLATITE	TUBULAR STEEL	5	GALVANISED	STEPPED TUBULAR
46110298	COLLUM HOUSE ROAD	Scunthorpe	489905.62	408725.41	2	7001	00207465	01/04/2005 00:00	2	4	LESS THAN 30MPH	BACK OF FOOTPATH	0	POST TOP	NOT APPLICABLE	RIGID COLUMN	URBIS	AXIA 2 S1	MALLATITE	TUBULAR STEEL	5	GALVANISED	STEPPED TUBULAR
46110298	COLLUM HOUSE ROAD	Scunthorpe	489920.9	408735.64	3	7002	00207466	01/04/2005 00:00	2	4	LESS THAN 30MPH	BACK OF FOOTPATH	0	POST TOP	NOT APPLICABLE	RIGID COLUMN	URBIS	AXIA 2 S1	KINGFISHER	TUBULAR STEEL	5	GALVANISED	STEPPED TUBULAR
46110298	COLLUM HOUSE ROAD	Scunthorpe	489940.87	408726.89	4	7003	00207467	01/04/2005 00:00	2	4	LESS THAN 30MPH	BACK OF FOOTPATH	0	POST TOP	NOT APPLICABLE	RIGID COLUMN	URBIS	AXIA 2 S1	MALLATITE	TUBULAR STEEL	5	GALVANISED	STEPPED TUBULAR
46110301	ST JAMES PLACE	Scunthorpe	490880	407546	1	7001	04200043	01/04/2007 00:00	1	3	LESS THAN 30MPH	BACK OF FOOTPATH	0	POST TOP	NOT APPLICABLE	RIGID COLUMN	URBIS	AXIA 2 S1	T AND L	TUBULAR STEEL	6	GALVANISED	TUBULAR
46110301	ST JAMES PLACE	Scunthorpe	490897	407574	2	7002	04200044	01/04/2007 00:00	1	3	LESS THAN 30MPH	BACK OF FOOTPATH	0	POST TOP	NOT APPLICABLE	RIGID COLUMN	URBIS	AXIA 2 S1	T AND L	TUBULAR STEEL	6	GALVANISED	TUBULAR
46110301	ST JAMES PLACE	Scunthorpe	490869	407571	3	7003	04200045	01/04/2007 00:00	1	3	LESS THAN 30MPH	BACK OF FOOTPATH	0	POST TOP	NOT APPLICABLE	RIGID COLUMN	URBIS	AXIA 2 S1	T AND L	TUBULAR STEEL	6	GALVANISED	TUBULAR
46110301	ST JAMES PLACE	Scunthorpe	490848	407582	4	7004	04200046	01/04/2007 00:00	1	3	LESS THAN 30MPH	BACK OF FOOTPATH	0	POST TOP	NOT APPLICABLE	RIGID COLUMN	URBIS	AXIA 2 S1	T AND L	TUBULAR STEEL	6	GALVANISED	TUBULAR
46110301	ST JAMES PLACE	Scunthorpe	490865	407608	5	7005	04200047	01/04/2007 00:00	1	3	LESS THAN 30MPH	BACK OF FOOTPATH	0	POST TOP	NOT APPLICABLE	RIGID COLUMN	URBIS	AXIA 2 S1	T AND L	TUBULAR STEEL	6	GALVANISED	TUBULAR
46110301	ST JAMES PLACE	Scunthorpe	490854	407617	6	7006	04200048	01/04/2007 00:00	1	3	LESS THAN 30MPH	BACK OF FOOTPATH	0	POST TOP	NOT APPLICABLE	MID HINGED	URBIS	AXIA 2 S1	VALMONT ST	SHEET STEEL	6	GALVANISED	LEVEN
46110302	BOYDS COURT	Scunthorpe	490825	407517	1	7001	04200041	01/04/2006 00:00	1	3	LESS THAN 30MPH	BACK OF FOOTPATH	0	POST TOP	NOT APPLICABLE	RIGID COLUMN	URBIS	AXIA 2 S1	T AND L	TUBULAR STEEL	6	GALVANISED	TUBULAR
46110302	BOYDS COURT	Scunthorpe	490811	407488	2	7002	04200042	01/04/2006 00:00	1	3	LESS THAN 30MPH	BACK OF FOOTPATH	0	POST TOP	NOT APPLICABLE	RIGID COLUMN	URBIS	AXIA 2 S1	T AND L	TUBULAR STEEL	6	GALVANISED	TUBULAR
46110303	BEDFORD WAY	Scunthorpe	489239.14	412532.87	1	7000	00207468	01/04/2006 00:00	4	4	LESS THAN 30MPH	BACK OF FOOTPATH	0	POST TOP	NOT APPLICABLE	RIGID COLUMN	URBIS	AXIA 2 S1	PETITJEAN	TUBULAR STEEL	6	GALVANISED	METRO
46110303	BEDFORD WAY	Scunthorpe	489149	412361	10	7009	00207477	01/04/2006 00:00	4	4	LESS THAN 30MPH	BACK OF FOOTPATH	0	POST TOP	NOT APPLICABLE	RIGID COLUMN	URBIS	AXIA 2 S1	PETITJEAN	TUBULAR STEEL	6	GALVANISED	METRO
46110303	BEDFORD WAY	Scunthorpe	489111	412354	11	7010	00207478	01/04/2006 00:00	4	4	LESS THAN 30MPH	BACK OF FOOTPATH	0	POST TOP	NOT APPLICABLE	RIGID COLUMN	URBIS	AXIA 2 S1	PETITJEAN	TUBULAR STEEL	6	GALVANISED	METRO
46110303	BEDFORD WAY	Scunthorpe	489084	412360	12	7011	00207479	01/04/2006 00:00	4	4	LESS THAN 30MPH	BACK OF FOOTPATH	0	POST TOP	NOT APPLICABLE	RIGID COLUMN	URBIS	AXIA 2 S1	PETITJEAN	TUBULAR STEEL	6	GALVANISED	METRO
46110303	BEDFORD WAY	Scunthorpe	489071	412384	13	7012	00207480	01/04/2006 00:00	4	4	LESS THAN 30MPH	BACK OF FOOTPATH	0	POST TOP	NOT APPLICABLE	RIGID COLUMN	URBIS	AXIA 2 S1	PETITJEAN	TUBULAR STEEL	6	GALVANISED	METRO
46110303	BEDFORD WAY	Scunthorpe	489059	412421	14	7013	00207481	01/04/2006 00:00	4	4	LESS THAN 30MPH	BACK OF FOOTPATH	0	POST TOP	NOT APPLICABLE	RIGID COLUMN	URBIS	AXIA 2 S1	PETITJEAN	TUBULAR STEEL	6	GALVANISED	METRO
46110303	BEDFORD WAY	Scunthorpe	489055	412459	15	7014	00207482	01/04/2006 00:00	4	4	LESS THAN 30MPH	BACK OF FOOTPATH	0	POST TOP	NOT APPLICABLE	RIGID COLUMN	URBIS	AXIA 2 S1	PETITJEAN	TUBULAR STEEL	6	GALVANISED	METRO
46110303	BEDFORD WAY	Scunthorpe	489059	412492	16	7015	00207483	01/04/2006 00:00	4	4	LESS THAN 30MPH	BACK OF FOOTPATH	0	POST TOP	NOT APPLICABLE	RIGID COLUMN	URBIS	AXIA 2 S1	PETITJEAN	TUBULAR STEEL	6	GALVANISED	METRO
46110303	BEDFORD WAY	Scunthorpe	489266.85	412522.73	2	7001	00207469	01/04/2006 00:00	4	4	LESS THAN 30MPH	BACK OF FOOTPATH	0	POST TOP	NOT APPLICABLE	RIGID COLUMN	URBIS	AXIA 2 S1	PETITJEAN	TUBULAR STEEL	6	GALVANISED	METRO
46110303	BEDFORD WAY	Scunthorpe	489255.56	412493.09	3	7002	00207470	01/04/2006 00:00	4	4	LESS THAN 30MPH	BACK OF FOOTPATH	0	POST TOP	NOT APPLICABLE	RIGID COLUMN	URBIS	AXIA 2 S1	PETITJEAN	TUBULAR STEEL	6	GALVANISED	METRO
46110303	BEDFORD WAY	Scunthorpe	489253.53	412462.19	4	7003	00207471	01/04/2006 00:00	4	4	LESS THAN 30MPH	BACK OF FOOTPATH	0	POST TOP	NOT APPLICABLE	RIGID COLUMN	URBIS	AXIA 2 S1	PETITJEAN	TUBULAR STEEL	6	GALVANISED	METRO
46110303	BEDFORD WAY	Scunthorpe	489246	412442	5	7004	00207472	01/04/2006 00:00	4	4	LESS THAN 30MPH	BACK OF FOOTPATH	0	POST TOP	NOT APPLICABLE	RIGID COLUMN	URBIS	AXIA 2 S1	PETITJEAN	TUBULAR STEEL	6	GALVANISED	METRO
46110303	BEDFORD WAY	Scunthorpe	489231	412418	6	7005	00207473	01/04/2006 00:00	4	4	LESS THAN 30MPH	BACK OF FOOTPATH	0	POST TOP	NOT APPLICABLE	RIGID COLUMN	URBIS	AXIA 2 S1	PETITJEAN	TUBULAR STEEL	6	GALVANISED	METRO
46110303	BEDFORD WAY	Scunthorpe	489246	412387	7	7006	00207474	01/04/2006 00:00	4	4	LESS THAN 30MPH	BACK OF FOOTPATH	0	POST TOP	NOT APPLICABLE	RIGID COLUMN	URBIS	AXIA 2 S1	PETITJEAN	TUBULAR STEEL	6	GALVANISED	METRO
46110303	BEDFORD WAY	Scunthorpe	489213	412376	8	7007	00207475	01/04/2006 00:00	4	4	LESS THAN 30MPH	BACK OF FOOTPATH	0	POST TOP	NOT APPLICABLE	RIGID COLUMN	URBIS	AXIA 2 S1	PETITJEAN	TUBULAR STEEL	6	GALVANISED	METRO
46110303	BEDFORD WAY	Scunthorpe	489186	412365	9	7008	00207476	01/04/2006 00:00	4	4	LESS THAN 30MPH	BACK OF FOOTPATH	0	POST TOP	NOT APPLICABLE	RIGID COLUMN	URBIS	AXIA 2 S1	PETITJEAN	TUBULAR STEEL	6	GALVANISED	METRO
46110304	MITRE GARDENS	Scunthorpe	489261.93	412550.63	1	7000	00207484	01/04/2006 00:00	4	4	LESS THAN 30MPH	BACK OF FOOTPATH	0	POST TOP	NOT APPLICABLE	RIGID COLUMN	URBIS	AXIA 2 S1	PETITJEAN	TUBULAR STEEL	6	GALVANISED	METRO
46110304	MITRE GARDENS	Scunthorpe	489267.34	412581.63	2	7001	00207485	01/04/2006 00:00	4	4	LESS THAN 30MPH	BACK OF FOOTPATH	0	POST TOP	NOT APPLICABLE	RIGID COLUMN	URBIS	AXIA 2 S1	PETITJEAN	TUBULAR STEEL	6	GALVANISED	METRO
46110305	BARNARD MEADOWS	Kirton in Lindsey Parish	493876.8	398936.2	1	7000	00207486	01/04/2007 00:00	1	3	LESS THAN 30MPH	BACK OF FOOTPATH	0	POST TOP	NOT APPLICABLE	RIGID COLUMN	URBIS	AXIA 2 S1	MALLATITE	TUBULAR STEEL	5	GALVANISED	TUBULAR
46110305	BARNARD MEADOWS	Kirton in Lindsey Parish	493897.4	398927.8	2	7001	00207487	01/04/2007 00:00	1	3	LESS THAN 30MPH	BACK OF FOOTPATH	0	POST TOP	NOT APPLICABLE	RIGID COLUMN	URBIS	AXIA 2 S1	MALLATITE	TUBULAR STEEL	5	GALVANISED	TUBULAR
46110305	BARNARD MEADOWS	Kirton in Lindsey Parish	493929.1	398937.8	3	7002	00207488	01/04/2007 00:00	1	3	LESS THAN 30MPH	BACK OF FOOTPATH	0	POST TOP	NOT APPLICABLE	RIGID COLUMN	URBIS	AXIA 2 S1	MALLATITE	TUBULAR STEEL	5	GALVANISED	TUBULAR
46110305	BARNARD MEADOWS	Kirton in Lindsey Parish	493954.1	398929.7	4	7003	00207489	01/04/2007 00:00	1	3	LESS THAN 30MPH	BACK OF FOOTPATH	0	POST TOP	NOT APPLICABLE	RIGID COLUMN	URBIS	AXIA 2 S1	MALLATITE	TUBULAR STEEL	5	GALVANISED	TUBULAR
46110305	BARNARD MEADOWS	Kirton in Lindsey Parish	493982.2	398920.9	5	7004	00207490	01/04/2007 00:00	1	3	LESS THAN 30MPH	BACK OF FOOTPATH	0	POST TOP	NOT APPLICABLE	RIGID COLUMN	URBIS	AXIA 2 S1	MALLATITE	TUBULAR STEEL	5	GALVANISED	TUBULAR
46110305	BARNARD MEADOWS	Kirton in Lindsey Parish	493996.1	398910.9	6	7005	00207491	01/04/2007 00:00	1	3	LESS THAN 30MPH	BACK OF FOOTPATH	0	POST TOP	NOT APPLICABLE	RIGID COLUMN	URBIS	AXIA 2 S1	MALLATITE	TUBULAR STEEL	5	GALVANISED	TUBULAR
46110305	BARNARD MEADOWS	Kirton in Lindsey Parish	493948.6	398918.2	7	7006	00207492	01/04/2007 00:00	1	3	LESS THAN 30MPH	BACK OF FOOTPATH	0	POST TOP	NOT APPLICABLE	RIGID COLUMN	URBIS	AXIA 2 S1	MALLATITE	TUBULAR STEEL	5	GALVANISED	TUBULAR
46110305	BARNARD MEADOWS	Kirton in Lindsey Parish	493930.8	398894.2	8	7007	00207493	01/04/2007 00:00	1	3	LESS THAN 30MPH	BACK OF FOOTPATH	0	POST TOP	NOT APPLICABLE	RIGID COLUMN	URBIS	AXIA 2 S1	MALLATITE	TUBULAR STEEL	5	GALVANISED	TUBULAR
46110307	CELANDINE CLOSE	South Killingholme Parish	514658.4	416312.3	1	7000	00207494	01/04/2001 00:00	3	1	LESS THAN 30MPH	BACK OF FOOTPATH	0	POST TOP	NOT APPLICABLE	RIGID COLUMN	URBIS	AXIA 2 S1	MALLATITE	TUBULAR STEEL	6	GALVANISED	STEPPED TUBULAR
46110307	CELANDINE CLOSE	South Killingholme Parish	514646.4	416342.3	2	7001	00207495	01/04/2001 00:00	3	1	LESS THAN 30MPH	BACK OF FOOTPATH	0	POST TOP	NOT APPLICABLE	RIGID COLUMN	URBIS	AXIA 2 S1	MALLATITE	TUBULAR STEEL	6	GALVANISED	STEPPED TUBULAR
46110307	CELANDINE CLOSE	South Killingholme Parish	514621.1	416347.9	3	7002	00207496	01/04/2001 00:00	3	1	LESS THAN 30MPH	BACK OF FOOTPATH	0	POST TOP	NOT APPLICABLE	RIGID COLUMN	URBIS	AXIA 2 S1	MALLATITE	TUBULAR STEEL	6	GALVANISED	STEPPED TUBULAR
46110307	CELANDINE CLOSE	South Killingholme Parish	514615.9	416361.6	4	7003	00207497	01/04/2001 00:00	3	1	LESS THAN 30MPH	BACK OF FOOTPATH	0	POST TOP	NOT APPLICABLE	RIGID COLUMN	URBIS	AXIA 2 S1	MALLATITE	TUBULAR STEEL	6	GALVANISED	STEPPED TUBULAR
46110308	OAK DRIVE	Messingham Parish	489646.5	404978.7	1	7000	00207498	01/04/2005 00:00	4	1	LESS THAN 30MPH	BACK OF FOOTPATH	0	POST TOP	NOT APPLICABLE	RIGID COLUMN	URBIS	AXIA 2 S1	MALLATITE	TUBULAR STEEL	6	GALVANISED	STEPPED TUBULAR
46110308	OAK DRIVE	Messingham Parish	489627	404983.7	2	7001	00207499	01/04/2005 00:00	4	1	LESS THAN 30MPH	BACK OF FOOTPATH	0	POST TOP	NOT APPLICABLE	RIGID COLUMN	URBIS	AXIA 2 S1	MALLATITE	TUBULAR STEEL	6	GALVANISED	STEPPED TUBULAR
46110308	OAK DRIVE	Messingham Parish	489618.1	404969	3	7002	00207500	01/04/2005 00:00	4	1	LESS THAN 30MPH	BACK OF FOOTPATH	0	POST TOP	NOT APPLICABLE	RIGID COLUMN	URBIS	AXIA 2 S1	MALLATITE	TUBULAR STEEL	6	GALVANISED	STEPPED TUBULAR
46110308	OAK DRIVE	Messingham Parish	489631.7	404937.7	4	7003	00207501	01/04/2005 00:00	4	1	LESS THAN 30MPH	BACK OF FOOTPATH	0	POST TOP	NOT APPLICABLE	RIGID COLUMN	URBIS	AXIA 2 S1	MALLATITE	TUBULAR STEEL	6	GALVANISED	STEPPED TUBULAR
46110308	OAK DRIVE	Messingham Parish	489631	404898.7	5	7004	00207502	01/04/2005 00:00	4	1	LESS THAN 30MPH	BACK OF FOOTPATH	0	POST TOP	NOT APPLICABLE	RIGID COLUMN	URBIS	AXIA 2 S1	MALLATITE	TUBULAR STEEL	6	GALVANISED	STEPPED TUBULAR
46110308	OAK DRIVE	Messingham Parish	489626.1	404880.8	6	7005	00207503	01/04/2005 00:00	4	1	LESS THAN 30MPH	BACK OF FOOTPATH	0	POST TOP	NOT APPLICABLE	RIGID COLUMN	URBIS	AXIA 2 S1	MALLATITE	TUBULAR STEEL	6	GALVANISED	STEPPED TUBULAR
46110308	OAK DRIVE	Messingham Parish	489639.7	404853.6	7	7006	00207504	01/04/2005 00:00	4	1	LESS THAN 30MPH	BACK OF FOOTPATH	0	POST TOP	NOT APPLICABLE	RIGID COLUMN	URBIS	AXIA 2 S1	MALLATITE	TUBULAR STEEL	6	GALVANISED	STEPPED TUBULAR
46110310	ARCHERS CLOSE	Wrawby Parish	501747.39	409129.85	1	7000	00207505	01/04/1995 00:00	6	4	LESS THAN 30MPH	VERGE	0	POST TOP	NOT APPLICABLE	RIGID COLUMN	URBIS	AXIA 2 S1	PETITJEAN	SHEET STEEL	5	GALVANISED	NIDD
46110310	ARCHERS CLOSE	Wrawby Parish	501723.46	409115.19	2	7001	00183973	01/04/1995 00:00	6	4	LESS THAN 30MPH	VERGE	0	POST TOP	NOT APPLICABLE	RIGID COLUMN	URBIS	AXIA 2 S1	PETITJEAN	SHEET STEEL	5	GALVANISED	NIDD
46110310	ARCHERS CLOSE	Wrawby Parish	501701.97	409112.28	3	7002	00183974	01/04/1995 00:00	6	4	LESS THAN 30MPH	VERGE	0	POST TOP	NOT APPLICABLE	RIGID COLUMN	URBIS	AXIA 2 S1	PETITJEAN	SHEET STEEL	5	GALVANISED	NIDD
46110310	ARCHERS CLOSE	Wrawby Parish	501690.76	409091.17	4	7003	00183975	01/04/1995 00:00	6	4	LESS THAN 30MPH	VERGE	0	POST TOP	NOT APPLICABLE	RIGID COLUMN	URBIS	AXIA 2 S1	PETITJEAN	SHEET STEEL	5	GALVANISED	NIDD
46110310	ARCHERS CLOSE	Wrawby Parish	501702.19	409068.99	5	7004	00183976	01/04/1995 00:00	6	4	LESS THAN 30MPH	VERGE	0	POST TOP	NOT APPLICABLE	RIGID COLUMN	URBIS	AXIA 2 S1	PETITJEAN	SHEET STEEL	5	GALVANISED	NIDD
46110310	ARCHERS CLOSE	Wrawby Parish	501717.49	409060.31	6	7006	00183977	01/04/1995 00:00	6	4	LESS THAN 30MPH	VERGE	0	POST TOP	NOT APPLICABLE	RIGID COLUMN	URBIS	AXIA 2 S1	PETITJEAN	SHEET STEEL	5	GALVANISED	NIDD
46110311	RAMBLERS LANE	Barton upon Humber Parish	502340.12	422383.41	1	7000	00207506	01/04/2007 00:00	5	2	LESS THAN 30MPH	BACK OF FOOTPATH	0	POST TOP	NOT APPLICABLE	RIGID COLUMN	URBIS	AXIA 2 S1	MALLATITE	TUBULAR STEEL	6	GALVANISED	STEPPED TUBULAR
46110311	RAMBLERS LANE	Barton upon Humber Parish	502356.1	422406.8	2	7001	00207507	01/04/2008 00:00	5	2	LESS THAN 30MPH	BACK OF FOOTPATH	0	POST TOP	NOT APPLICABLE	RIGID COLUMN	URBIS	AXIA 2 S1	MALLATITE	TUBULAR STEEL	6	GALVANISED	STEPPED TUBULAR
46110311	RAMBLERS LANE	Barton upon Humber Parish	502356.94	422442.1	3	7002	00207508	01/04/2007 00:00	5	2	LESS THAN 30MPH	BACK OF FOOTPATH	0	POST TOP	NOT APPLICABLE	RIGID COLUMN	URBIS	AXIA 2 S1	MALLATITE	TUBULAR STEEL	6	GALVANISED	STEPPED TUBULAR
46110311	RAMBLERS LANE	Barton upon Humber Parish	502366	422473.8	4	7003	00207509	01/04/2008 00:00	5	2	LESS THAN 30MPH	VERGE	0	POST TOP	NOT APPLICABLE	RIGID COLUMN	URBIS	AXIA 2 S1	MALLATITE	TUBULAR STEEL	6	GALVANISED	STEPPED TUBULAR
46110311	RAMBLERS LANE	Barton upon Humber Parish	502370.4	422506.9	5	7004	00207510	01/04/2008 00:00	5	2	LESS THAN 30MPH	VERGE	0	POST TOP	NOT APPLICABLE	RIGID COLUMN	URBIS	AXIA 2 S1	MALLATITE	TUBULAR STEEL	6	GALVANISED	STEPPED TUBULAR
46110311	RAMBLERS LANE

46110984	BAYLEAF LANE	Barton upon Humber Parish	504154	422056	4	7004	04200286	01/04/2010 00:00	5	2	LESS THAN 30MPH	BACK OF FOOTPATH	0	POST TOP	NOT APPLICABLE	RIGID COLUMN	HOLOPHANE	VMAX V1 L024	MALLATITE	TUBULAR STEEL	6	GALVANISED	TUBULAR
46110984	BAYLEAF LANE	Barton upon Humber Parish	504157	422088	5	7005	04200287	01/04/2010 00:00	5	2	LESS THAN 30MPH	BACK OF FOOTPATH	0	POST TOP	NOT APPLICABLE	RIGID COLUMN	HOLOPHANE	VMAX V1 L024	MALLATITE	TUBULAR STEEL	6	GALVANISED	TUBULAR
46110984	BAYLEAF LANE	Barton upon Humber Parish	504153	422127	6	7006	04200288	01/04/2010 00:00	5	2	LESS THAN 30MPH	BACK OF FOOTPATH	0	POST TOP	NOT APPLICABLE	RIGID COLUMN	HOLOPHANE	VMAX V1 L024	MALLATITE	TUBULAR STEEL	6	GALVANISED	TUBULAR
46110984	BAYLEAF LANE	Barton upon Humber Parish	504148	422150	7	7007	04200289	01/04/2010 00:00	5	2	LESS THAN 30MPH	BACK OF FOOTPATH	0	POST TOP	NOT APPLICABLE	RIGID COLUMN	HOLOPHANE	VMAX V1 L024	MALLATITE	TUBULAR STEEL	6	GALVANISED	TUBULAR
46110984	BAYLEAF LANE	Barton upon Humber Parish	504113	422133	8	7008	04200290	01/04/2010 00:00	5	2	LESS THAN 30MPH	BACK OF FOOTPATH	0	POST TOP	NOT APPLICABLE	RIGID COLUMN	HOLOPHANE	VMAX V1 L024	MALLATITE	TUBULAR STEEL	6	GALVANISED	TUBULAR
46110985	CANBERRA VIEW	Barton upon Humber Parish	504190	421934	1	7001	04200269	01/04/2010 00:00	5	2	LESS THAN 30MPH	BACK OF FOOTPATH	0	POST TOP	NOT APPLICABLE	RIGID COLUMN	HOLOPHANE	VMAX V1 L024	MALLATITE	TUBULAR STEEL	6	GALVANISED	TUBULAR
46110985	CANBERRA VIEW	Barton upon Humber Parish	504159	421951	2	7002	04200270	01/04/2010 00:00	5	2	LESS THAN 30MPH	VERGE	0	POST TOP	NOT APPLICABLE	RIGID COLUMN	HOLOPHANE	VMAX V1 L024	MALLATITE	TUBULAR STEEL	6	GALVANISED	TUBULAR
46110985	CANBERRA VIEW	Barton upon Humber Parish	504137	421948	3	7003	04200271	01/04/2010 00:00	5	2	LESS THAN 30MPH	VERGE	0	POST TOP	NOT APPLICABLE	RIGID COLUMN	HOLOPHANE	VMAX V1 L024	MALLATITE	TUBULAR STEEL	6	GALVANISED	MALLATITE
46110985	CANBERRA VIEW	Barton upon Humber Parish	504110	421963	4	7004	04200272	01/04/2010 00:00	5	2	LESS THAN 30MPH	VERGE	0	POST TOP	NOT APPLICABLE	RIGID COLUMN	HOLOPHANE	VMAX V1 L024	MALLATITE	TUBULAR STEEL	6	GALVANISED	TUBULAR
46110985	CANBERRA VIEW	Barton upon Humber Parish	504070	421955	5	7005	04200273	01/04/2010 00:00	5	2	LESS THAN 30MPH	VERGE	0	POST TOP	NOT APPLICABLE	RIGID COLUMN	HOLOPHANE	VMAX V1 L024	MALLATITE	TUBULAR STEEL	6	GALVANISED	MALLATITE
46110985	CANBERRA VIEW	Barton upon Humber Parish	504038	421970	6	7006	04200274	01/04/2010 00:00	5	2	LESS THAN 30MPH	BACK OF FOOTPATH	0	POST TOP	NOT APPLICABLE	RIGID COLUMN	HOLOPHANE	VMAX V1 L024	MALLATITE	TUBULAR STEEL	6	GALVANISED	TUBULAR
46110985	CANBERRA VIEW	Barton upon Humber Parish	504025	421997	7	7007	04200275	01/04/2010 00:00	5	2	LESS THAN 30MPH	BACK OF FOOTPATH	0	POST TOP	NOT APPLICABLE	RIGID COLUMN	HOLOPHANE	VMAX V1 L024	MALLATITE	TUBULAR STEEL	6	GALVANISED	TUBULAR
46110986	PEARLEAF DRIVE	Barton upon Humber Parish	504143	421828	1	7001	04200360	01/04/2010 00:00	5	2	LESS THAN 30MPH	BACK OF FOOTPATH	0	POST TOP	NOT APPLICABLE	RIGID COLUMN	HOLOPHANE	VMAX V1 L024	MALLATITE	TUBULAR STEEL	6	GALVANISED	TUBULAR
46110986	PEARLEAF DRIVE	Barton upon Humber Parish	504102	421828	2	7002	04200361	01/04/2010 00:00	5	2	LESS THAN 30MPH	BACK OF FOOTPATH	0	POST TOP	NOT APPLICABLE	RIGID COLUMN	HOLOPHANE	VMAX V1 L024	MALLATITE	TUBULAR STEEL	6	GALVANISED	TUBULAR
46110986	PEARLEAF DRIVE	Barton upon Humber Parish	504080	421837	3	7003	04200362	01/04/2010 00:00	5	2	LESS THAN 30MPH	BACK OF FOOTPATH	0	POST TOP	NOT APPLICABLE	RIGID COLUMN	HOLOPHANE	VMAX V1 L024	MALLATITE	TUBULAR STEEL	6	GALVANISED	TUBULAR
46110986	PEARLEAF DRIVE	Barton upon Humber Parish	504067	421828	4	7004	04200363	01/04/2010 00:00	5	2	LESS THAN 30MPH	BACK OF FOOTPATH	0	POST TOP	NOT APPLICABLE	RIGID COLUMN	HOLOPHANE	VMAX V1 L024	MALLATITE	TUBULAR STEEL	6	GALVANISED	TUBULAR
46110987	PLUMLEAF WAY	Barton upon Humber Parish	504135	421894	1	7007	04200349	01/04/2010 00:00	5	2	LESS THAN 30MPH	BACK OF FOOTPATH	0	POST TOP	NOT APPLICABLE	RIGID COLUMN	HOLOPHANE	VMAX V1 L024	MALLATITE	TUBULAR STEEL	6	GALVANISED	TUBULAR
46110987	PLUMLEAF WAY	Barton upon Humber Parish	504104	421902	2	7006	04200348	01/04/2010 00:00	5	2	LESS THAN 30MPH	VERGE	0	POST TOP	NOT APPLICABLE	RIGID COLUMN	HOLOPHANE	VMAX V1 L024	MALLATITE	TUBULAR STEEL	6	GALVANISED	TUBULAR
46110987	PLUMLEAF WAY	Barton upon Humber Parish	504078	421896	3	7005	04200282	01/04/2010 00:00	5	2	LESS THAN 30MPH	VERGE	0	POST TOP	NOT APPLICABLE	RIGID COLUMN	HOLOPHANE	VMAX V1 L024	MALLATITE	TUBULAR STEEL	6	GALVANISED	TUBULAR
46110987	PLUMLEAF WAY	Barton upon Humber Parish	504049	421889	4	7004	04200281	01/04/2010 00:00	5	2	LESS THAN 30MPH	VERGE	0	POST TOP	NOT APPLICABLE	RIGID COLUMN	HOLOPHANE	VMAX V1 L024	MALLATITE	TUBULAR STEEL	6	GALVANISED	TUBULAR
46110987	PLUMLEAF WAY	Barton upon Humber Parish	504034.11	421903.56	5	7003	04200280	01/04/2010 00:00	5	2	LESS THAN 30MPH	VERGE	0	POST TOP	NOT APPLICABLE	RIGID COLUMN	HOLOPHANE	VMAX V1 L024	MALLATITE	TUBULAR STEEL	6	GALVANISED	TUBULAR
46110987	PLUMLEAF WAY	Barton upon Humber Parish	504028	421938	6	7002	04200279	01/04/2010 00:00	5	2	LESS THAN 30MPH	VERGE	0	POST TOP	NOT APPLICABLE	RIGID COLUMN	HOLOPHANE	VMAX V1 L024	MALLATITE	TUBULAR STEEL	6	GALVANISED	TUBULAR
46110987	PLUMLEAF WAY	Barton upon Humber Parish	504025	421960	7	7001	04200278	01/04/2010 00:00	5	2	LESS THAN 30MPH	VERGE	0	POST TOP	NOT APPLICABLE	RIGID COLUMN	HOLOPHANE	VMAX V1 L024	MALLATITE	TUBULAR STEEL	6	GALVANISED	TUBULAR
46110994	UPPERTHORPE ROAD	Haxey Parish	476428	399877	2	7001	04200242	01/04/2001 00:00	6	2	LESS THAN 30MPH	VERGE	0	POST TOP	NOT APPLICABLE	RIGID COLUMN	URBIS	AXIA 2 S1	MALLATITE	TUBULAR STEEL	6	GALVANISED	TUBULAR
46110994	UPPERTHORPE ROAD	Haxey Parish	476418	399911	3	7002	04200243	01/04/2001 00:00	6	2	LESS THAN 30MPH	VERGE	0	POST TOP	NOT APPLICABLE	RIGID COLUMN	URBIS	AXIA 2 S1	MALLATITE	TUBULAR STEEL	6	GALVANISED	TUBULAR

| year | road_segment_id | parking_area | street | area | commonwealth_side | gps_x | gps_y | utility | lamp_type | lamp_prefixed | gear_type | charge_code | mount | snatch_register | bunting_brace | control_charge_code | control_charge_code | rigid_pole_manufacturer | rigid_pole_material | rigid_pole_type | rigid_pole_colour | rigid_pole_diameter | rigid_pole_length | rigid_pole_finish | rigid_pole_protection | rigid_pole_finished | rigid_pole_finished | rigid_pole_finished

| | | |

| | | |

| | | |

| | | |

Schedule 3: ***Not used***

Schedule 4: *quotation procedure*

1 The quotation procedure is stated in ITT Section B - Part A Scope Section 4 Call off Arrangements.

Schedule 5 Work Order Conditions and Default Contract Data that apply to Work Orders

The Work Order Particulars that apply to a Work Order are:

- the set of Work Order Conditions under Part 1 of this Schedule 5 specified by the *Client Representative* in accordance with clause 23.1;
- the Default Contract Data under Part 2 of this Schedule 5 specified by the *Client Representative* in accordance with clause 23.1;
- the Optional Z-Clauses under of this Schedule 5 specified by the *Client Representative* in accordance with clause 23.1.

Part 1 Work Order Conditions

In respect of each Work Order, the *Client Representative* specifies within the relevant request for quotation one of the following forms of NEC4 Contracts, the conditions of which are to be incorporated into the Work Order:

(a) NEC 4 Term Service Contract with optional Z clauses

Schedule 6: Suppliers Tender

	Internal Ref:	T4
	Review date	Oct 2025
	Version No.	V1.0

Tender Reply Form 4 – Method Statement Reply Form

- Please refer to Section E – Tender Evaluation Plan for guidance as to Award Criteria and Methodology.
- Please do not convert this tender reply form to a PDF.
- Please note the weightings for each criteria to understand the relative importance of one criteria to another.
- Tenderers are limited to the specified word count limit, where stated. Text exceeding the word count will be red-lined and not evaluated.
- Method statements should provide relevant detail on how you propose to deliver the required outcomes/outputs prescribed within the Specification.
- Please do not provide appendices or links that have not been requested as part of a criteria. Additional appendices and/or links will not be assessed.
- Please do not answer a criteria by referring to responses to other criteria or to specific paragraphs within responses to other criteria as these will not be evaluated.
- Please do not include images or tables where the words cannot be counted using Microsoft word count functionality unless specifically requested. Should you include images or tables which have not been requested and the words cannot be counted using the word count function, these images or tables shall be removed and not evaluated.

	Internal Ref:	T4
	Review date	Oct 2025
	Version No.	V1.0

Criteria 1	**Service Critical** a. Provide details of your plan for mobilising this contract, including your proposals for the acquisition of the plant and vehicles required, demonstrating that there are sufficient numbers available to cover the contract requirements b. Demonstrate you understanding of the Specification by detailing the works to be carried out, your Methodology must include all details from issue to programming and then point of Site set-up through to completion of Works giving a detailed step-by-step plan through to Project Completion for symology update. This must also include your Health & Safety Risk Assessment & Method Statements. c. Please detail how you will ensure the service delivery timescales as requested by the Client will be adhered to and managed throughout the life of the project. d. Provide details of the proposed location of the depot(s) from which you will service this contract and describe how the depot will be adapted to cover the North East Lincolnshire (NEL) and North Lincolnshire (NL) contract's requirements including providing adequate space for safe and secure material storage for both. e. Detail any service in addition to that described in the contract specification that you will provide that will:- • Introduce efficiency savings • Add value to the service • Generates either cashable or non-cashable savings • Any innovation that you can offer
Weighting	30
Relative Importance	12
Word Count Limit	3500
Response	Response Redacted

	Internal Ref:	T4
	Review date	Oct 2025
	Version No.	V1.0

	Response Redacted

	Internal Ref:	T4
	Review date	Oct 2025
	Version No.	V1.0

	Response Redacted

	Internal Ref:	T4
	Review date	Oct 2025
	Version No.	V1.0

	Response Redacted

	Internal Ref:	T4
	Review date	Oct 2025
	Version No.	V1.0

	Response Redacted

	Internal Ref:	T4
	Review date	Oct 2025
	Version No.	V1.0

	Response Redacted

	Internal Ref:	T4
	Review date	Oct 2025
	Version No.	V1.0

	Response Redacted

	Internal Ref:	T4
	Review date	Oct 2025
	Version No.	V1.0

	Response Redacted

	Internal Ref:	T4
	Review date	Oct 2025
	Version No.	V1.0

	Response Redacted

	Internal Ref:	T4
	Review date	Oct 2025
	Version No.	V1.0

	Response Redacted

	Internal Ref:	T4
	Review date	Oct 2025
	Version No.	V1.0

Criteria 2	**Knowledge and Skills** a. Please detail your organisations experience in delivering similar work for other local authorities b. Provide information on the qualifications and training of the personnel who will be working on this contract including HEA membership and through these records of the competencies that relate to their discipline and role. (This part not included in word count) c. Please outline assurances regarding how your organisation aims to ensure service continuity. Your response should include the provision for additional resources (e.g. if vehicles, personnel, equipment and tools become unexpectedly unavailable or are required on the other contract).
Weighting	20
Relative Importance	8
Word Count Limit	1500
Response	Response Redacted

	Internal Ref:	T4
	Review date	Oct 2025
	Version No.	V1.0

	Response Redacted

	Internal Ref:	T4
	Review date	Oct 2025
	Version No.	V1.0

	Response Redacted

	Internal Ref:	T4
	Review date	Oct 2025
	Version No.	V1.0

	Response Redacted

	Internal Ref:	T4
	Review date	Oct 2025
	Version No.	V1.0

	Response Redacted

	Internal Ref:	T4
	Review date	Oct 2025
	Version No.	V1.0

	Response Redacted

	Internal Ref:	T4
	Review date	Oct 2025
	Version No.	V1.0

	Response Redacted

	Internal Ref:	T4
	Review date	Oct 2025
	Version No.	V1.0

	Response Redacted

	Internal Ref:	T4
	Review date	Oct 2025
	Version No.	V1.0

Criteria 3	**Health & Safety** a. How will you work with NL, and NEL to ensure that the Health, Safety and Environmental impact of your works is minimised and improvement opportunities identified b. Explain how your company ensures compliance with health and safety regulations for street lighting maintenance. c. Please describe the arrangements you have in place to manage health and safety effectively and control significant risks relevant to the requirement (including risks from the use of contractors, where relevant).
Weighting	30
Relative Importance	12
Word Count Limit	2000
Response	Response Redacted

	Internal Ref:	T4
	Review date	Oct 2025
	Version No.	V1.0

	Response Redacted

	Internal Ref:	T4
	Review date	Oct 2025
	Version No.	V1.0

	Response Redacted

	Internal Ref:	T4
	Review date	Oct 2025
	Version No.	V1.0

	Response Redacted

	Internal Ref:	T4
	Review date	Oct 2025
	Version No.	V1.0

	Response Redacted

	Internal Ref:	T4
	Review date	Oct 2025
	Version No.	V1.0

	Response Redacted

Criteria 4	**Social Value** The Client's Social Value Policy is set out in a document titled, 'Our approach to community benefit and social value'. This document sets out the Client's community benefit and social value ambitions, and includes examples of the commitments Provider's can make to support these ambitions. The Client expects the Provider to positively contribute towards delivery of the ambitions during the life of the Contract. Please provide details of how, during the Contract, you will contribute toward the Policy, setting out what tangible and meaningful added Social

	Internal Ref:	T4
	Review date	Oct 2025
	Version No.	V1.0

	Value commitments you will deliver to the North East Lincolnshire community. a. Please detail what specific social benefits you would bring to the contracting Client, should you be successful in being permitted to the framework. Your response should include examples of the benefits for the local community, but not be limited to, the following: • local subcontracting supply chains • engaging with regeneration or education projects in the locality • offering apprenticeships and other training opportunities • any other company schemes or participation • any other added benefits beyond the scope of the Specification that your organisation can provide for this contract. b. What policies does your organisation have regarding modern slavery and human trafficking, and if modern slavery is identified in your supply chain, what sanction and remediation processes do you undertake?
Weighting	10
Relative Importance	4
Word Count Limit	1000
Response	Response Redacted

	Internal Ref:	T4
	Review date	Oct 2025
	Version No.	V1.0

	Response Redacted

	Internal Ref:	T4
	Review date	Oct 2025
	Version No.	V1.0

	Response Redacted

	Internal Ref:	T4
	Review date	Oct 2025
	Version No.	V1.0

Criteria 5	**Climate, Environment, and Waste Management** The Client is committed to becoming Carbon Net Zero by 2030, minimising waste, especially single use plastics, and enhancing biodiversity. Describe your policies and approaches to minimising the environmental impact of your organisation whilst delivering the requirements of this contract. Your response should include, but not be limited to, the following criteria: a. how you incorporate sustainability across your organisation b. how you minimise environmental your environmental impacts. c. your approach to waste management how you will maximise energy and carbon savings (Calculations can be included to support of how the savings will be made) Innovative ideas optimise cost and minimise waste
Weighting	10
Relative Importance	4
Word Count Limit	1000
Response	Response Redacted

	Internal Ref:	T4
	Review date	Oct 2025
	Version No.	V1.0

	Response Redacted

	Internal Ref:	T4
	Review date	Oct 2025
	Version No.	V1.0

	Response Redacted

	Internal Ref:	T4
	Review date	Oct 2025
	Version No.	V1.0

	Response Redacted

Section E - Tender Reply Form 5 - Lot 1 Schedule of Rates NELC

Framework for the Installation and Maintenance of Road Lighting, Traffic Signs and Bollards for North East and North Lincolnshire Councils

YORtender Reference: 100182
FTS Reference:2025/S 000-031840

Lot 1 - North East Lincolnshire Council - Scheudle of Rates

Summary of Schedule Of Rates

Please note the following quantities provided in this document are based on estimates of what may be required in a 12 month period. The following quantities are not guaranteed during a 12 month period, and or the contract term. The Client reserves the right to increase or decrease the following quantities stated.

SERIES 200 - SITE CLEARANCE	SHEET 1 SHEET 2	**Amount Redacted for Sheet 1 and 2**
SERIES 500 - DRAINAGE	SHEET 1	**Amount Redacted**
SERIES 700 - PAVEMENTS	SHEET 1	**Amount Redacted**
SERIES 1400 - ELECTRICAL WORK FOR ROAD LIGHTING AND TRAFFIC SIGNS	SHEET 1 SHEET 2 SHEET 3	**Amount Redacted for Sheet 1 to Sheet 3**
SERIES 2700 - ROUTINE MAINTENANCE	SHEET 1	**Amount Redacted**
SERIES 2700 - UNSCHEDULED MAINTENANCE	SHEET 1 SHEET 2 SHEET 3	**Amount Redacted for Sheet 1 to Sheet 3**
SERIES 2700 - ADDITIONAL MAINTENANCE	SHEET 1 SHEET 2 SHEET 3 SHEET 4 SHEET 5 SHEET 6 SHEET 7 SHEET 8	**Amount Redacted for Sheet 1 - Sheet 8.**
DAYWORKS	SHEET 1	**Amount Redacted**
OPERATIONAL SERVICE COSTS	SHEET 1	**Amount Redacted**

TOTAL ESTIMATED ANNUAL COST:	**Amount Redacted**
PREFORMANCE BOND PER YEAR	**Amount Redacted**
TOTAL ESTIMATED COST WITH BO	**Amount Redacted**

Item	Description	Quantity	Unit	Rate	Amount £	Amount p
	GENERAL SITE CLEARANCE					
	Take Up Or Down And Set Aside For Re-Use Or Remove To Store Or Tip Off Site				Rates and Amounts Redacted	
1	Take Up Or Down And Set Aside For Re-Use Site Lighting Unit Including Bracket Arm And Lantern Less Than 8m Nominal Height.	5	No.			
2	Take Up Or Down And Remove To Store Lighting Unit Including Bracket Arm And Lantern Less Than 8m Nominal Height.	5	No.			
3	Take Up Or Down And Remove To Tip Off Site Lighting Unit Including Bracket Arm And Lantern Less Than 8m Nominal Height.	225	No.			
4	Take Up Or Down And Set Aside For Re-Use Lighting Unit Including Bracket Arm And Lantern 8m And Above But Not Exceeding 12m Nominal Height.	5	No.			
5	Take Up Or Down And Remove To Store Lighting Unit Including Bracket Arm And Lantern 8m And Above But Not Exceeding 12m Nominal Height.	5	No.			
6	Take Up Or Down And Remove To Tip Off Site Lighting Unit Including Bracket Arm And Lantern 8m And Above But Not Exceeding 12m Nominal Height.	60	No.			
7	Take Up Or Down And Set Aside For Re-Use Lit Traffic Sign Mounted On 1 No: Post Including Luminaire.	5	No.			
8	Take Up Or Down And Remove To Store Lit Traffic Sign Mounted On 1 No: Post Including Luminaire.	5	No.			
9	Take Up Or Down And Remove To Tip Off Site Lit Traffic Sign Mounted On 1 No: Post Including Luminaire.	25	No.			
10	Take Up Or Down And Set Aside For Re-Use Lit Traffic Sign Mounted On 2 No: Post Including Luminaire.	2	No.			
11	Take Up Or Down And Remove To Store Lit Traffic Sign Mounted On 2 No: Post Including Luminaire.	2	No.			
12	Take Up Or Down And Remove To Tip Off Site Lit Traffic Sign Mounted On 2 No: Post Including Luminaire.	2	No.			
13	Take Up Or Down And Set Aside For Re-Use Site Lit Traffic Bollard.	1	No.			
14	Take Up Or Down And Remove To Store Lit Traffic Bollard.	1	No.			
15	Take Up Or Down And Remove Tip Off Site Lit Traffic Bollard.	100	No.			
16	Take Up Or Down And Set Aside For Re-Use Traffic Sign Mounted On 1 No: Post.	5	No.			
17	Take Up Or Down And Remove To Store Traffic Sign Mounted On 1 No: Post.	5	No.			
18	Take Up Or Down And Remove To Tip Off Site Traffic Sign Mounted On 1 No: Post.	20	No.			
19	Take Up Or Down And Set Aside For Re-Use Traffic Sign Mounted On 2 No: Post.	2	No.			
20	Take Up Or Down And Remove To Store Traffic Sign Mounted On 2 No: Post.	2	No.			
21	Take Up Or Down And Remove To Tip Off Site Traffic Sign Mounted On 2 No: Post.	5	No.			
	PAGE 1 SUBTOTAL TO SUMMARY PAGE					

Item	Description	Quantity	Unit	Rate	Amount £	Amount p
	GENERAL SITE CLEARANCE					
	Take Up Or Down And Set Aside For Re-Use Or Remove To Store Or Tip Off Site				Rates and Amounts Redacted	
22	Take Up Or Down And Set Aside For Reuse Road Lighting Luminaire Mounted On 5/6m Height Column	50	No.			
23	Take Up Or Down And Remove To Store Road Lighting Luminaire Mounted On 5/6m Height Column	30	No.			
24	Take Up Or Down And Set Aside For Reuse, Road Lighting Luminaire Mounted On 8/10/12m Height Column	50	No.			
24A	Take down lantern to store 12.10m - 20m	2	No.			
25	Take Up Or Down And Remove To Store Road Lighting Luminaire Mounted On 8/10/12m Height Column	30	No.			
26	Take Up Or Down And Set Aside For Reuse Traffic Sign Plate Of Area Up To And Including $1m^2$.	15	No.			
27	Take Up Or Down And Remove To Store Traffic Sign Plate Of Area Up To And Including 1m2.	10	No.			
28	Take Up Or Down And Set Aside For Reuse Traffic Sign Plate Of Area Greater Than $1m^2$ But Not Exceeding $2m^2$.	5	No.			
29	Take Up Or Down And Remove To Store Traffic Sign Plate Of Area Greater Than 1m2 But Not Exceeding 2m2.	5	No.			
30	Take Up Or Down And Remove To Tip Off Site Traffic Sign Plate Of Area Greater Than 1m2 But Not Exceeding 2m2.	5	No.			
31	Take Up Or Down And Set Aside For Re-Use Site Belisha Beacon Including Post.	2	No.			
32	Take Up Or Down And Set Aside For Re-Use School Patrol Flashing Sign Including Post.	5	No.			
32A	Take down Belisha Beacon or Refuge Beacon to tip	15	No.			
32B	Take down to store Belisha Beacon Lantern	5	No.			
32C	Take down to store Refuge Beacon Lantern	5	No.			
32D	Take down to store/reuse/tip types A-D signlight Lantern	30	No.			
	PAGE 2 SUBTOTAL TO SUMMARY PAGE					

Item	Description	Quantity	Unit	Rate	Amount £	Amount p
	DRAINAGE AND SERVICE DUCTS					
36	One Number 100mm Internal Diameter Service Duct In Trench Prepared By Others.	100	m		Rates and Amounts Redacted	
37	One Number 50mm Internal Diameter Service Duct In Trench Prepared By Others.	100	m			
	EXCAVATION IN HARD MATERIAL					
38	Extra over excavation for excavation in hard material for service duct.	10	m^3			
	DRAINAGE AND SERVICE DUCTS (MATERIALS ONLY)					
39	Service Duct 100mm Diameter	100	m			
40	Service Duct 50mm Diameter	100	m			
	PAGE 1 SUBTOTAL TO SUMMARY PAGE					

Item	Description	Quantity	Unit	Rate	Amount £	p
	REINSTATEMENT OF PAVED AREAS					
51	Reinstatement of Paved Area Type 5A 350mm Deep (Concrete)	20	m^2		Rates and Amounts Redacted	
52	Reinstatement of Paved Area Type 5B 220mm Deep (Tarmac)	80	m^2			
53	Reinstatement of Paved Area Type 5C 225mm Deep (Flags)	60	m^2			
54	Reinstatement of Paved Area Type 5D 110-130mm Deep (Block paving)	40	m^2			
	PAGE 1 SUBTOTAL TO SUMMARY PAGE					

Item	Description	Quantity	Unit	Rate	Amount £	p
	TRENCH FOR CABLE					
55	Trench Exceeding 150mm But Not Exceeding 300mm Wide, Depth Not Exceeding 1.5 Metres In Carriageways.	20	m		Rates and Amounts Redacted	
56	Trench Exceeding 150mm But Not Exceeding 300mm Wide, Depth Not Exceeding 1.5 Metres In Verges And Central Reserves.	400	m			
57	Trench Exceeding 150mm But Not Exceeding 300mm Wide, Depth Not Exceeding 1.5 Metres In Footways.	300	m			
58	Trench Exceeding 150mm But Not Exceeding 300mm Wide, Depth Not Exceeding 1.5 Metres In Bridge Decks.	20	m			
59	Trench Exceeding 150mm But Not Exceeding 300mm Wide, Depth Not Exceeding 1.5 Metres In Paved Areas.	100	m			
	CABLE					
63	$6mm^2$ 3 Core XLPE/SWA/PVC Cable With Copper Conductors.	440	m			
64	$10mm^2$ 3 Core XLPE/SWA/PVC Cable With Copper Conductors.	150	m			
65	$16mm^2$ 3 Core XLPE/SWA/PVC Cable With Copper Conductors.	150	m			
66	$25mm^2$ 3 Core XLPE/SWA/PVC Cable With Copper Conductors.	25	m			
	CABLE JOINTS AND CABLE TERMINATIONS (ITEMS TO INCLUDE FOR ALL MATERIALS)					
71	Straight Joint $6mm^2$ 3 Core XLPE/SWA/PVC Cable.	100	No.			
72	Straight Joint $10mm^2$ to $25mm^2$ 3 Core XLPE/SWA/PVC Cable.	20	No.			
73	Tee/Branch Joint 3 Core XLPE/SWA/PVC Cable Maximum Core Size $25mm^2$	5	No.			
75	Single Way Cable Termination In Lighting Unit Or Lit Sign/Bollard To $6mm^2$ 3 Core XLPE/SWA/PVC Cable.	100	No.			
	CABLE JOINTS AND CABLE TERMINATIONS (ITEMS TO INCLUDE FOR ALL MATERIALS)					
76	Single Way Cable Termination In Lighting Unit Or Lit Sign/Bollard To $10mm^2$ to $25mm^2$ 3 Core XLPE/SWA/PVC Cable.	20	No.			
77	Two Way Cable Termination In Lighting Unit Or Lit Sign/Bollard To $6mm^2$ 3 Core XLPE/SWA/PVC Cable.	80	No.			
78	Two Way Cable Termination In Lighting Unit Or Lit Sign/Bollard To $10mm^2$ to $25mm^2$ 3 Core XLPE/SWA/PVC Cable.	20	No.			
80	Three Way Cable Termination In Lighting Unit Or Lit Sign/Bollard To Maximum Cable Size $25mm^2$ 3 Core XLPE/SWA/PVC Cable.	5	No.			
81	Termination In Feeder Pillar To Maximum Cable Size $25mm^2$ 3 Core XLPE/SWA/PVC Cable.	60	No.			
	PAGE 1 SUBTOTAL TO SUMMARY PAGE					
	CABLE JOINTS AND CABLE TERMINATIONS (ITEMS TO INCLUDE FOR ALL MATERIALS)				Rates and Amounts Redacted	
82	Pot end joint 10mm2 to 25mm2 3 core cable	20	No.			
82A	Pot end joint 6mm2 3 core cable	100	No.			
	FEEDER PILLARS					
83	Installation Of Single Phase Feeder Pillar Type 16A	50	No.			
84	Installation Of Single Phase Feeder Pillar Type 16B	20	No.			
	DNO CONNECTIONS					
89A	New Service to Lamppost/ traffic sign made (upto 3m)	30	No.			
89B	New Service to Lamppost/ traffic sign unmade	5	No.			
89C	Transfer Service to Lamppost/Traffic Sign Made (upto 3m)	300	No.			
89D	Transfer Service to Lamppost/Traffic Sign unmade	5	No.			
89E	Disconnect Service to Lamppost/Traffic Sign Made	20	No.			
89F	Disconnect Service to Lamppost/Traffic Sign unmade	2	No.			
89G	Extra cable joint in same excavation	50	No.			
89I	Transfer from 5th core to phase (including excavation)	2	No.			

Item	Description	Quantity	Unit	Rate	Amount £	p
89J	Transfer existing control column to new control column	5	No.		Rates and Amounts Redacted	
89K	Additional trench made (per metre)	50	M			
89L	Additional trench unmade (per metre)	5	M			
89M	Cutout Charge	10	No.			
89N	Additional trench - Road type 1 & 2 (per metre)	5	M			
89O	Additional trench - Road type 3 & 4 (per metre)	5	M			
89P	Additional charge for cable & duct	50	M			
89Q	Jointing team per hour	1	HR			
89R	Pull cable through 3rd party duct (per metre)	1	M			
89S	Jointing team per hour-Evening work/Saturday-in addition to main charge codes	1	HR			
89T	Jointing team Sunday- upto 5hrs & in addition to main charge codes	1	HR			
89U	Jointing team Sunday- Between 5 & 8hrs & in addition to main charge codes	1	HR			
89V	Jointing team Sunday- per hour-over 8hrs & in addition to main charge codes	1	HR			
	PAGE 2 SUBTOTAL TO SUMMARY PAGE					
	DNO CONNECTIONS				Rates and Amounts Redacted	
89W	Excavation work -Evening work or Saturday (after 1.30pm)	1	HR			
89X	Excavation work -Sunday upto 5hrs	1	HR			
89Y	Excavation work -Sunday between 5 & 8hrs	1	HR			
89Z	Excavation work -Sunday each hour more than 8hrs	1	HR			
	PAGE 3 SUBTOTAL TO SUMMARY PAGE					

Item	Description	Quantity	Unit	Rate	Amount £	p
	ROUTINE MAINTENANCE **ROUTINE MAINTENANCE OF LIT TRAFFIC SIGNS, LIT TRAFFIC BOLLARDS, BELISHA BEACONS, SCHOOL PATROL FLASHING SIGNS AND CENTRAL ISLAND BEACONS**				Rates and Amounts Redacted	
90	Routine Maintenance Of Lit Traffic Sign-Sign Size 0.01m^2 - 0.99m2	1960	No			
91	Routine Maintenance Of Lit Traffic Sign-Sign Size 1.00m^2 - 1.99m^2	90	No			
92	Routine Maintenance Of Lit Traffic Sign-Sign Size 2.00m^2 - 3.99m^2	35	No			
93	Routine Maintenance Of Lit Traffic Sign-Sign Size 4.00m^2 - 9.99m^2	2	No			
94	Routine Maintenance Of Lit Traffic Sign-Sign Size 10.00m^2 - 25.00m^2	2	No			
95	Routine Maintenance Of Lit Traffic Bollard 270mm Aspect	260	No			
95A	Routine Maintenance Of Non Lit/Solar Traffic Bollard 270mm Aspect	650	No			
96	Routine Maintenance Of Lit Traffic Bollard 600mm Aspect	45	No			
97	Routine Maintenance Of Belisha Beacon, School Patrol Flashing Sign And Central Island Beacon	255	No			
	PAGE 1 SUBTOTAL TO SUMMARY PAGE					

Item	Description	Quantity	Unit	Rate	Amount £	p
	UNSCHEDULED MAINTENANCE					
	UNSCHEDULED MAINTENANCE OF ROAD LIGHTING UNIT, LIT TRAFFIC SIGNS, LIT TRAFFIC BOLLARDS, BELISHA BEACONS, SCHOOL PATROL FLASHING SIGNS, CENTRAL ISLAND BEACONS AND FEEDER PILLARS				Rates and Amounts Redacted	
98	Unscheduled Maintenance Of Road Lighting Unit Up To And Including 6m Nominal Height	340	No.			
99	Unscheduled Maintenance Of Road Lighting Unit Above 6m And Up To And Including 8m Nominal Height	90	No.			
100	Unscheduled Maintenance Of Road Lighting Unit Above 8m And Up To And Including 12m Nominal Height	80	No.			
102	Unscheduled Maintenance Of Road Lighting Unit Above 8m And Up To And Including 12m Nominal Height on High Speed Road	10	No.			
104	Unscheduled Maintenance Of Lit Traffic Sign-Sign Size $0.01m^2$-$0.99m^2$	250	No.			
105	Unscheduled Maintenance Of Lit Traffic Sign-Sign Size $1.00m^2$-$1.99m^2$	20	No.			
106	Unscheduled Maintenance Of Lit Traffic Sign-Sign Size $2.00m^2$-$3.99m^2$	5	No.			
109	Unscheduled Maintenance Of Lit Traffic Bollard 270mm Aspect	50	No.			
109A	Unscheduled Maintenance Of Non Lit/solar Traffic Bollard 270mm Aspect	25				
110	Unscheduled Maintenance Of Lit Traffic Bollard 600mm Aspect	10	No.			
111	Unscheduled Maintenance Of Belisha Beacon, School Patrol Flashing Sign And Central Island Beacon	50	No.			
112	Unscheduled Maintenance Of Type 16B Feeder Pillar	5	No.			
113	Unscheduled Maintenance Of Type 10/12 Single Phase Feeder Pillar	2	No.			
114	Unscheduled Maintenance Of Type 30/32 3 Phase Feeder Pillar	2	No.			
	INSTALL COMPONENT					
115	Install Lamp	100	No.			
115A	Install Lampholder	50	No.			
116	Install Ballast/LED Driver	250	No.			
117	Install Ignitor	5	No.			
118	Install Feeder Pillar door lock	30	No.			
119	Install Photo Electric Cell	100	No.			
	PAGE 1 SUBTOTAL TO SUMMARY PAGE					
	INSTALL COMPONENT				Rates and Amounts Redacted	
120	Install Double Pole Isolator	300	No.			
122	Install 5/6m Replacement Column Door Item To Include For Provision Of Door Earth Door	20	No.			
123	Install 8/10/12m Replacement Column Door Item To Include For Provision Of Door Earth	15	No.			
125	Install Column Door Earth	30	No.			
126	Install Replacement Column Door Lock	25	No.			
127	Install Wooden Backboard In Existing Column	2	No.			
	TRAFFIC SAFETY AND MANAGEMENT ON HIGH SPEED ROADS/CONFLICT AREAS					
128	Traffic Safety and Management on High Speed Roads/Conflict Areas for planned and/or Unscheduled Maintenance	30	Per Day			
	COMPONENTS (SUPPLY ONLY RATES)					
	DOUBLE POLE ISOLATOR					
129	Tofco Double Pole Isolator Complete With Single Fuse Way Type E1	280	No.			
130	Tofco Double Pole Isolator Complete With Double Fuse Way Type E2	15	No.			
131	Tofco Double Pole Isolator Complete With Double Fuse Way Type 16A	10	No.			
132	Tofco Double Pole Isolator Complete With Triple Fuse Way	5	No.			
133	Tofco Double Pole Isolator Complete With Four Fuse Way	2	No.			
134	Tofco Extension Box	25	No.			

Item	Description	Quantity	Unit	Rate	Amount £	p
137A	**LAMP** Supply Lampholder	20	No		Rates and Amounts Redacted	
	PAGE 2 SUBTOTAL TO SUMMARY PAGE				£48,376.91	
	COMPONENTS (SUPPLY ONLY RATES)					
	SUPPLY REPLACEMENT COLUMN DOOR				Rates and Amounts Redacted	
269	Supply 5/6m Replacement Column Door Item To Include For Provision Of Door Earth	15	No.			
271	Supply 8/10/12m Replacement Column Door Item To Include For Provision Of Door Earth	10	No.			
273	Supply Column Earth Door	100	No.			
274	Supply Replacement Column Door Lock	10	No.			
275	Supply Wooden Backboard In Existing Column	5	No.			
	ATTENDANCE ON ENGINEERS INSTRUCTION					
276	Attendance On Engineers Instruction For Emergency Work Monday To Friday Inclusive Between 0700 Hours And 1800 Hours – Category 1	125	Hrs			
277	Attendance On Engineers Instruction For Emergency Work Monday To Friday Inclusive Between 0700 Hours And 1800 Hours – Category 2	10	Hrs			
277A	Attendance On Engineers Instruction For Emergency Work Monday To Friday Inclusive Between 0100 Hours And 0659 Hours Or 1801 Hours And 2359 Hours	30	Hrs			
278	Attendance On Engineers Instruction For Emergency Work On Saturdays	25	Hrs			
279	Attendance On Engineers Instruction For Emergency Work On Sundays, Bank Holidays and Public Holidays	25	Hrs			
	PAGE 3 SUBTOTAL TO SUMMARY PAGE					

Item	Description	Quantity	Unit	Rate	Amount £	p
	ADDITIONAL MAINTENANCE					
	INSTALL COMPONENT				Rates and Amounts Redacted	
298B	Install Zodion Vision Ki Node	10	No.			
	REMOVE FROM STORE AND RE-ERECT ROAD LIGHTING UNITS & LUMINAIRES					
308	Re-erect Site Lighting Unit Including Bracket Arm And Lantern Less Than 8m Nominal Height.	5	No.			
309	Remove from Store and Re-erect Lighting Unit Including Bracket Arm And Lantern Less Than 8m Nominal Height.	5	No.			
310	Re-erect Lighting Unit Including Bracket Arm And Lantern 8m And Above But Not Exceeding 12m Nominal Height.	5	No.			
311	Remove from Store and Re-erect Lighting Unit Including Bracket Arm And Lantern 8m And Above But Not Exceeding 12m Nominal Height.	5	No.			
312	Re-erect Road Lighting Luminaire Mounted On 5/6m Height Column	5	No.			
313	Remove from Store and Re-erect Road Lighting Luminaire Mounted On 5/6m Height Column	5	No.			
314	Re-erect Road Lighting Luminaire Mounted On 8/10/12m Height Column	5	No.			
315	Remove from Store and Re-erect Road Lighting Luminaire Mounted On 8/10/12m Height Column	5	No.			
	VERTICAL REALIGNMENT OF TRAFFIC SIGN					
332	Vertical Realignment Of Traffic Sign Unit, Belisha Beacon Or School Patrol Flashing Sign Mounted On 1No. Post	25	No			
333	Vertical Realignment Of Traffic Sign Unit Mounted On 2No. Posts	2	No			
334	Vertical Realignment Of Traffic Sign Unit Mounted On 3No. Posts	2	No			
335	Vertical Realignment of Traffic Sign Plate Mounted on 1No Post	30	No			
	INSTALLATION OF TRAFFIC SIGN POST					
336	Installation Of Lit Traffic Sign Post 76mm Diameter Height < 3.50m	10	No			
337	Installation Of Lit Traffic Sign Post 76mm Diameter Height > 3.50m < 4.99m	30	No			
338	Installation Of Lit Traffic Sign Post 114mm Diameter Height > 3.50m < 5.99m	5	No			
339	Installation Of Lit Traffic Sign Post 140mm Diameter Height > 3.50m < 6.50m	5	No			
340	Installation Of Non Lit Traffic Sign Post 76mm Diameter Height < 3.50m	10	No			
341	Installation Of Non Lit Traffic Sign Post 76mm Diameter Height > 3.50m < 4.99m	20	No			
342	Installation Of Non Lit Traffic Sign Post 114mm Diameter Height > 3.00m < 5.99m	5	No			
343	Installation Of Non Lit Traffic Sign Post 140mm Diameter Height > 3.00m < 6.50m	2	No			
	PAGE 1 SUBTOTAL TO SUMMARY PAGE					
	INSTALLATION OF TRAFFIC SIGN PLATE					
345	Installation Of Reflectorised Traffic Sign Plate On To 1No. 76mm Diameter Post	50	No.			

Item	Description	Quantity	Unit	Rate	Amount £	p
346	Installation Of Reflectorised Traffic Sign Plate On To 2No. 76mm Diameter Posts	10	No		Rates and Amounts Redacted	
347	Installation Of Reflectorised Traffic Sign Plate On To 1No. 114mm Diameter Post	1	No			
348	Installation Of Reflectorised Traffic Sign Plate On To 2No. 114mm Diameter Posts	2	No			
349	Installation Of Reflectorised Traffic Sign Plate On To 2No. 140mm Diameter Posts	1	No			
350	Installation Of Galvanised Traffic Sign Post Extension Or Outrigger Up To 500mm	10	No			
351	Installation Of Reflectorised Traffic Sign Plate On To 1No. Lighting Column	20	No			
351A	Installation of T/S plate on 1 No.89mm post	10	No			
351B	Installation of T/S plate on 2 No.89mm post	10	No			
	DRIVER FEEDBACK SIGNS					
352	Re-Locate Driver Feedback Sign To New Location As Per Plan	2	No.			
353	Supply And Install 3m High Lit Sign Post Hard Wired For Driver Feedback Sign	2	No.			
355	Install Driver Feedback Sign To Existing Post	2	No.			
	INSTALLATION OF NON LIT TRAFFIC BOLLARD					
356	Installation Of Non Lit Traffic Bollard Including Base	100	No.			
357	Installation Of Non Lit Traffic Bollard Top	20	No.			
	BELISHA BEACONS & SCHOOL CROSSING PATROL SIGNS					
362	Install Belisha Beacon Post Max Height 3.10m	6	No.			
363	Install Belisha Beacon Luminaire	10	No.			
364	Install School Patrol Flashing Warning Luminaire	5	No.			
365	Install Modular Belisha Beacon	10	No.			
366	Install Post Top Mounted LED Belisha Beacon/ Centre Refuge Beacon	15	No.			
	INSTALLATION OF FEEDER PILLAR					
367	Installation Of Pudsey Diamond or similar 2310 Feeder Pillar Cabinet And Detachable Root.	10	No.			
	PAGE 2 SUBTOTAL TO SUMMARY PAGE					
	VERTICAL REALIGNMENT OF ROAD LIGHTING UNIT				Rates and Amounts Redacted	
368	Vertical Realignment Of Road Lighting Unit Up To And Including 6m Nominal Height	30	No.			
369	Vertical Realignment Of Road Lighting Unit Above 6m And Up To And Including 12m Nominal Height	15	No.			
369A	Realignment of Lantern or bracket arm	50	No.			
	INSTALLATION OF ROAD LIGHTING COLUMNS, BRACKETS AND WALL MOUNTINGS					
370	Installation Of Steel Lighting Column Complete With Bracket Arm Up To And Including 6m Nominal Height	10	No.			
371	Installation Of Steel Post Top Mounting Lighting Column Up To And Including 6m Nominal Height	150	No.			
372	Installation Of Steel Lighting Column Complete With Bracket Arm Above 6m And Up To And Including 12m Nominal Height	10	No.			
373	Installation Of Steel Post Top Mounting Lighting Column Above 6m And Up To And Including 12m Nominal Height	40	No.			

Item	Description	Quantity	Unit	Rate	Amount £	p
376	Installation Of Steel Flange Plate Bolt Down Lighting Column Complete With Bracket Arm Above 6m And Up To And Including 12m Nominal Height	5	No.		Rates and Amounts Redacted	
376A	Installation of High mast column 12.10 - 20.00m	2	No.			
381	Installation Of Swan neck bracket arm to existing road lighting unit	2	No.			
381A	Abandoned Hole < 500mm Deep	40	No.			
381B	Abandoned Hole > 500mm Deep	5	No.			
	INSTALLATION OF TRAFFIC SIGN LUMINAIRE AND ASSOCIATED ELECTRICAL EQUIPMENT AND WIRING					
382	Installation Of External Traffic Sign Luminaire Type A	50	No			
383	Installation Of External Traffic Sign Luminaire Type B	2	No			
384	Installation Of External Traffic Sign Luminaire Type D	2	No			
	INTERNAL WIRING TO SIGN, ROAD LIGHTING UNIT					
392	Internal Wiring Sign Height From 0.01m – 3.99m	8	No.			
393	Internal Wiring Sign Height From 4.00m – 7.50m	10	No.			
395	Internal Wiring 5m Road Lighting Unit	5	No.			
396	Internal Wiring 6m Road Lighting Unit	250	No.			
397	Internal Wiring 8m Road Lighting Unit	60	No.			
398	Internal Wiring 10m Road Lighting Unit	30	No.			
399	Internal Wiring 12m Road Lighting Unit	30	No.			
	PAGE 3 SUBTOTAL TO SUMMARY PAGE					
	INSTALLATION OF LUMINAIRE AND ASSOCIATED ELECTRICAL EQUIPMENT				Rates and Amounts Redacted	
400	Installation Of Road Lighting Luminaire And Associated Electrical Equipment Up To And Including 6m Nominal Height	200	No.			
401	Installation Of Road Lighting Luminaire And Associated Electrical Equipment Above 6m And Up To And Including 12m Nominal Height	100	No.			
401A	Installation of lantern 12.10 - 20 metres	2	No.			
	CONVERSION OF LUMINAIRE EXISTING ROAD LIGHTING UNIT					
404	Conversion Of Luminaire Existing Road Lighting Unit Up To And Including 6m Nominal Height	30	No.			
405	Conversion Of Luminaire Existing Road Lighting Unit Above 6m And Up To And Including 12m Nominal Height	30	No.			
	SEASONAL ILLUMINATIONS					
406	Remove From Store, Test, Deliver To Site And Install Fixed Illumination Piece- $0.01m^2 < 2.99m^2$	180	No.			
407	Take Down And Return To Store Fixed Illumination Piece- $0.01m^2 < 2.99m^2$	140	No.			
408	Remove From Store, Test, Deliver To Site And Install Fixed Illumination Piece- $3.00m^2 < 5.00m^2$	5	No.			
409	Take Down And Return To Store Fixed Illumination Piece- $3.00m^2 < 5.00m^2$	2	No.			
410	Remove From Store, Test, Deliver To Site And Install Lamp Harnessing, LED Lamps And Catenary Wires Up To 30m	75	No.			
411	Take Down And Return To Store Lamp Harnessing, LED Lamps And Catenary Wires Up To 30m	65	No.			

Item	Description	Quantity	Unit	Rate	Amount £	Amount p
412	Remove From Store, Test, Deliver To Site And Install Festoon Lighting To Christmas Trees, 1-999 Lamps	5	No.		Rates and Amounts Redacted	
413	Remove From Store, Test, Deliver To Site And Install Festoon Lighting To Christmas Trees, 1000-1999 Lamps	10	No.			
414	Take Down And Return To Store Festoon Lighting From Christmas Trees, 1-999 Lamps	2	No.			
415	Take Down And Return To Store Festoon Lighting From Christmas Trees, 1000-1999 Lamps	6	No.			
416	Supply And Install IP68 Waterproof Socket Outlet	5	No.			
417	Supply And Install IP68 Waterproof Plug Top	5	No.			
418	Supply And Install Digital Timer	4	No.			
	BANNERS					
419	Install Banner To Column Mounted Banner Arm	15	No.			
420	Take Down Banner From Column Mounted Banner Arm	15	No.			
421	Mount Cross Road Banners To Building Mounted Anchor Points Up To 10m Long	2	No.			
	PAGE 4 SUBTOTAL TO SUMMARY PAGE					
	NUMBERING OF ROAD LIGHTING AND TRAFFIC SIGNS UNITS				Rates and Amounts Redacted	
422	Numbering of Road Lighting Units	1000	No			
423	Numbering of Traffic Signs	300	No			
423A	Numbering of Feeder Pillar	20	No			
	PROVING ELECTRICAL INTEGRITY					
424	Extra Over Routine Maintenance Of Lit Traffic Sign For Proving Electrical Integrity, to include the input of electrical testing data	380	No			
425	Extra Over Routine Maintenance Of Lit Bollard, Belisha/Refuge Beacon Or School Patrol Flashing Sign For Proving Electrical Integrity, to include the input of electrical testing data	100	No			
426	Extra Over General Maintenance Of Road Lighting Unit Up To And Including 6m Nominal Height For Proving Electrical Integrity, to include the input of electrical testing data	2000	No			
427	Extra Over Unscheduled Maintenance Of Road Lighting Unit Above 6m And Up To And Including 12m Nominal Height For Proving Electrical Integrity, to include the input of electrical testing data	1500	No			
428	Extra Over Unscheduled Maintenance Of Road Lighting Unit Above 12m And Up To And Including 18m Nominal Height For Proving Electrical Integrity, to include the input of electrical testing data	10	No			
429	Extra Over Unscheduled Maintenance Of type 16A/16B feeder pillar For Proving Electrical Integrity, to include the input of electrical testing data	40	No			
430	Extra Over Unscheduled Maintenance Of type 10/12 feeder pillar For Proving Electrical Integrity, to include the input of electrical testing data	15	No			
431	Extra Over Unscheduled Maintenance Of type 30 feeder pillar For Proving Electrical Integrity, to include the input of electrical testing data	15	No			

Item	Description	Quantity	Unit	Rate	Amount £	p
	COMPONENTS (SUPPLY ONLY RATES)				Rates and Amounts Redacted	
	PHOTO ELECTRIC CELLS					
432	Supply Zodion 'SS12' 35/18 lux Miniature Photo Electric Cell	120	No.			
433	Supply Zodion SS14 35/18 lux MPC	2	No.			
434	Supply Zodion SS19 35/18 lux Part Night MPC	2	No.			
435	Supply Zodion SS20 35/18 lux Part Night Dimming MPC	2	No.			
436	Supply Zodion C10 35/18 lux Cylindrical MPC	2	No.			
438	Supply Zodion Nema NB-10T Ki Gen Node	150	No			
	COMPONENTS (SUPPLY ONLY RATES)					
	TRAFFIC SIGN LUMINAIRE					
451	Supply TMP Eco Light LED Sign Lighting Unit	30	No.			
452	Supply Reddlight RH1 LED Sign Lighting Unit	30	No.			
453	Supply Glasdon Lumino City 750 LED Sign Lighting Unit	30	No.			
	PAGE 5 SUBTOTAL TO SUMMARY PAGE					
	(SUPPLY ONLY RATES)				Rates and Amounts Redacted	
	TRAFFIC SIGN PLATE					
531	600mm Triangle Sign Plate	30	No			
532	750mm Triangle Sign Plate	5	No			
533	900mm Triangle Sign Plate	2	No			
534	1200mm Triangle Sign Plate	2	No			
535	1500mm Triangle Sign Plate	1	No			
536	300mm Circle Sign Plate	1	No			
537	450mm Circle Sign Plate	1	No			
538	600mm Circle Sign Plate	30	No			
539	750mm Circle Sign Plate	5	No			
540	900mm Circle Sign Plate	2	No			
541	1200mm Circle Sign Plate	2	No			
542	Rectangular Sign Plate Size $0.01m^2 < 0.09m^2$	1	No.			
543	Rectangular Sign Plate Size $0.10m^2 < 0.49m^2$	25	No.			
544	Rectangular Sign Plate Size $0.50m^2 < 0.99m^2$	10	No.			
545	Rectangular Sign Plate Size $1.00m^2 < 1.99m^2$	10	No.			
546	Extra Over Above Item For Rectangular Sign Plate	5	m^2			
	TRAFFIC SIGN POSTS					
547	Lit Traffic Sign Post 76mm Dia. Up To 3.5m Above Ground	1	No			
548	Lit Traffic Sign Post 76mm Dia. Up To 5.0m Above Ground	50	No			
549	Lit Cranked Traffic Sign Post 76mm Dia. Up To 3.5m Above Ground	1	No			
550	Lit Cranked Traffic Sign Post 76mm Dia. Up To 5.0m Above Ground	10	No			
551	Lit Traffic Sign Post 114mm Dia. Up To 3.5m Above Ground	1	No			
552	Lit Traffic Sign Post 114mm Dia. Up To 5.0m Above Ground	5	No			
553	Non-Lit Traffic Sign Post 76mm Dia. Up To 3.5m Above Ground	30	No			
554	Non-Lit Traffic Sign Post 76mm Dia. Up To 5.0m Above Ground	10	No			
555	Non-Lit Traffic Sign Post 114mm Dia. Up To 3.5m Above Ground	2	No			
556	Non-Lit Traffic Sign Post 114mm Dia. Up To 5.0m Above Ground	6	No			
556A	Lit Traffic Sign Post 89mm 5m	8	No			
556B	Non lit Traffic Sign Post 89mm 3.5m	10	No			
556C	Non lit Traffic Sign Post 89mm 5m	4	No			
556D	Lit Traffic Sign Post 89mm 3-5m	4	No			

Item	Description	Quantity	Unit	Rate	Amount £	Amount p
	PAGE 6 SUBTOTAL TO SUMMARY PAGE					
	NON LIT TRAFFIC BOLLARD				Rates and Amounts Redacted	
558	Pudsey Diamond Flexabol RSRB Single Aspect with Rear Reflective Panels, c/w base & Fixings & flexible Bollard Top	100	No			
560	Pudsey Diamond Visaboll Flexible Bollard Top only	8	No			
564	TMP Evo-N Non lit Flexible bollard top only	4	No			
565	Sign Post Solutions SPS 3Sixty Non lit bollard c/w base & fixings & flexible bollard top	6	No			
566	Sign Post Solutions SPS 3Sixty Flexible bollard top only	6	No			
567	Glasdon Flexible bollard top only	25	No			
	BELISHA BEACONS & SCHOOL CROSSING PATROL SIGNS					
568	Simmonsigns LED Belisha Beacon modupost c/w LED lit shaft & modubel LED beacon	6	No			
569	Simmonsigns LED Belisha Beacon modupost c/w LED lit shaft & midubel LED beacon & post extension up to 6m	6	No			
570	Simmonsigns Belisha Beacon LED Modubel or Midubel Lumainaire only	4	No			
571	Simmonsigns Post Top Mounted LED Centre Refuge Beacon	4	No			
568A	Light & Energy LED Belisha Beacon modupost c/w LED lit shaft & modubel LED beacon	4	No			
569A	Light & Energy LED Belisha Beacon modupost c/w LED lit shaft & midubel LED beacon & post extension up to 6m	4	No			
572	School Patrol Flashing Luminaire Unit	1	No			
573	Replacement Belisha / Centre Refuge Beacon Globe	5	No			
	(SUPPLY ONLY RATES)					
	ROAD LIGHTING COLUMNS, BRACKETS AND WALL MOUNTINGS					
578	Fabrikat Tubular Steel 6m post Top Column painted to RAL 6009	150	No			
581	Fabrikat Tubular Steel 8m post Top Column painted to RAL 6009	50	No			
586	Fabrikat Tubular Steel 10m post top Column painted to RAL 6009	20	No.			
591	Fabrikat Tubular Steel 12m Post Top Column painted to RAL 6009	20	No.			
599	Abacus 6m Nominal Height Galvanised Raise And Lower Column T061RLS	50	No.			
602	Pudsey Diamond 6m Nominal Height Galvanised Raise And Lower Column	20	No.			
605	Wall Bracket Including Electrical Housing	1	No			
	FEEDER PILLAR (SUPPLY ONLY RATES)					
630	Pudsey Diamond 2310 Feeder Pillar Cabinet Or Similar And Approved By Engineer	8	No			
	PAGE 7 SUBTOTAL TO SUMMARY PAGE					

Item	Description	Quantity	Unit	Rate	Amount £	p
	ANCILLARY EQUIPMENT (SUPPLY ONLY RATES)				Rates and Amounts Redacted	
	TRAFFIC SIGN EXTENSIONS					
636	300mm Galvanised Outrigger	2	No			
637	500mm Galvanised Outrigger	6	No			
638	76mm Galvanised Post Extension Height Up To 300mm	2	No			
	PROVISION OF LIGHTING AND / OR CABLING DESIGN					
645	Provision of lighting and cabling design for 1 to 20 units	4	No.			
646	Provision of lighting and cabling design for 21 to 100 units	6	No.			
647	Provision of lighting design for 1 to 20 units	3	No.			
648	Provision of lighting design for 21 to 100 units	3	No.			
649	Provision of cabling design for 1 to 20 units	3	No.			
650	Provision of cabling design for 21 to 100 units	3	No.			
	NIGHT TIME INSPECTION SYSTEM					
651	Carry out night patrol inspection of North East Lincs on Street Lighting and Traffic Signs routes	100	Hrs			
	CLEANING OF BOLLARDS					
657	Cleaning of Bollards	20	No			
	FUSES & ISOLATORS					
664	Install Fuse	100	No.			
665	Provision of Fuses	100	No.			
	SPECIAL ACCESS					
695	Special access requirement for footpath - Scaffold	5	No			
	PAGE 8 SUBTOTAL TO SUMMARY PAGE					

Item	Description	Quantity	Unit	Rate	Amount £	p
750	DAYWORKS - PLANT OPERATOR	6	hr		Rates and Amounts Redacted	
751	DAYWORKS - APPROVED ELECTRICIAN	40	hr			
752	DAYWORKS - SKILLED OPERATIVE	24	hr			
753	DAYWORKS - HGV/PLANT OPERATOR	2	hr			
754	DAYWORKS - FOREMAN	12	hr			
755	DAYWORKS - HIAB LORRY INC OPERATIVES AND EQUIPMENT	100	hr			
756	DAYWORKS - HOIST AND OPERATIVE	200	hr			
757	DAYWORKS - VAN AND FOREMAN	30	hr			
	PAGE 1 SUBTOTAL TO SUMMARY PAGE					

Item	Description	Quantity	Unit	Rate	Amount £	p
758	Painting of 5m column as per NELC specification	10	No		Rates and Amounts Redacted	
759	Painting of 6m column as per NELC specification	200	No			
760	Painting of 8m column as per NELC specification	80	No			
761	Painting of 10m column as per NELC specification	30	No			
762	Painting of 12m column as per NELC specification	30	No			
763	Demolition/removal of ticket machine	1	No			
764	Installation of ticket machine including base	1	No			
765	Provision of power supply to ticket machine	1	No			
	PAGE 1 SUBTOTAL TO SUMMARY PAGE					

Section E - Tender Reply Form 5 - Lot 2 Schedule of Rates NLC

Framework for the Installation and Maintenance of Road Lighting, Traffic Signs and Bollards for North East and North Lincolnshire Councils

North Lincolnshire Council

YORtender Reference: 100182
FTS Reference: 2025/S 000-031840

Lot 2 - North Lincolnshire Council - Schedule of Rates

Summary of Schedule Of Rates

Please note the following quantities provided in this document are based on estimates of what may be required in a 12 month period. The following quantities are not guaranteed during a 12 month period, and or the contract term. The Client reserves the right to increase or decrease the following quantities

SERIES 200 - SITE CLEARANCE	**SHEET 1** **SHEET 2**	Amounts redacted for Sheet 1 - 2
SERIES 500 - DRAINAGE	SHEET 1	Amounts redacted for Sheet 1
SERIES 700 - PAVEMENTS	SHEET 1	Amounts redacted for Sheet 1
SERIES 1200 - TRAFFIC SIGNS & ROAD MARKINGS	SHEET 1	Amounts redacted for Sheet 1
SERIES 1300 - ROAD LIGHTING COLUMNS & BRACKETS	SHEET 1	Amounts redacted for Sheet 1
SERIES 1400 - ELECTRICAL WORK FOR ROAD LIGHTING AND TRAFFIC SIGNS	SHEET 1 SHEET 2 SHEET 3	Amounts redacted for Sheet 1 - 3
SERIES 2700 - ADDITIONAL MAINTENANCE	SHEET 1 SHEET 2	Amounts redacted for Sheet 1 - 2
DAYWORKS	SHEET 1	Amounts redacted for Sheet 1
TOTAL ESTIMATED ANNUAL		Amounts redacted
PREFORMANCE BOND PER YEAR	Amounts redacted	
TOTAL ESTIMATED COST WITH BOND	Amounts redacted	

Item	Description	Quantity	Unit	Rate	Amount £	Amount p
	GENERAL SITE CLEARANCE				Rates and Amounts Redacted	
	Take Up Or Down And Set Aside For Re-Use Or Remove To Store Or Tip Off Site					
	Lighting Columns					
1	Take Up Or Down And Remove To Store Lighting Unit Including Bracket Arm And Lantern Less Than 8m Nominal Height.	10	No.			
2	Take Up Or Down And Remove To Tip Off Site Lighting Unit Including Bracket Arm And Lantern Less Than 8m Nominal Height.	1000	No.			
3	Take Up Or Down And Remove To Store Lighting Unit Including Bracket Arm And Lantern 8m And Above But Not Exceeding 12m Nominal Height.	10	No.			
4	Take Up Or Down And Remove To Tip Off Site Lighting Unit Including Bracket Arm And Lantern 8m And Above But Not Exceeding 12m Nominal Height.	5	No.			
	Illuminated Traffic Signs					
5	Take Up Or Down And Remove To Store Lit Traffic Sign Mounted On 1 No: Post Including Luminaire.	5	No.			
6	Take Up Or Down And Remove To Tip Off Site Lit Traffic Sign Mounted On 1 No: Post Including Luminaire.	48	No.			
7	Take Up Or Down And Remove To Store Lit Traffic Sign Mounted On 2 No: Post Including Luminaire.	1	No.			
8	Take Up Or Down And Remove To Tip Off Site Lit Traffic Sign Mounted On 2 No: Post Including Luminaire.	4	No.			
	Illuminated Traffic Bollards					
9	Take Up Or Down And Remove Tip Off Site Lit Traffic Bollard.	32	No.			
	Non Illuminated Traffic Signs					
10	Take Up Or Down And Remove To Store Traffic Sign Mounted On 1 No: Post.	1	No.			
11	Take Up Or Down And Remove To Tip Off Site Traffic Sign Mounted On 1 No: Post.	20	No.			
12	Take Up Or Down And Remove To Store Traffic Sign Mounted On 2 No: Post.	1	No.			
13	Take Up Or Down And Remove To Tip Off Site Traffic Sign Mounted On 2 No: Post.	10	No.			
	SHEET 1 SUBTOTAL TO SUMMARY PAGE					

Item	Description	Quantity	Unit	Rate	Amount £	Amount p
	GENERAL SITE CLEARANCE				Rates and Amounts Redacted	
	Take Up Or Down And Set Aside For Re-Use Or Remove To Store Or Tip Off Site					
	Road Lighting Luminaires					
14	Take Up Or Down And Set Aside For Reuse Road Lighting Luminaire Mounted On 5/6m Height Column	1000	No.			
15	Take Up Or Down And Remove To Store Road Lighting Luminaire Mounted On 5/6m Height Column	500	No.			
16	Take Up Or Down And Set Aside For Reuse, Road Lighting Luminaire Mounted On 8/10/12m Height Column	500	No.			
17	Take Up Or DownAnd Remove To Store Road Lighting Luminaire Mounted on 12m -20m Height Column	1	No.			
18	Take Up Or Down And Remove To Store Road Lighting Luminaire Mounted On 8/10/12m Height Column	500	No.			
	Traffic Sign Plates					
19	Take Up Or Down And Set Aside For Reuse Traffic Sign Plate Of Area Up To And Including $1m^2$.	1	No.			
20	Take Up Or Down And Remove To Store Traffic Sign Plate Of Area Up To And Including 1m2.	5	No.			
21	Take Up Or Down And Set Aside For Reuse Traffic Sign Plate Of Area Greater Than $1m^2$ But Not Exceeding $2m^2$.	1	No.			
22	Take Up Or Down And Remove To Store Traffic Sign Plate Of Area Greater Than 1m2 But Not Exceeding 2m2.	1	No.			
23	Take Up Or Down And Remove To Tip Off Site Traffic Sign Plate Of Area Up To And Including 1m2 But Not Exceeding 2m2.	50	No.			
24	Take Up Or Down And Remove To Tip Off Site Traffic Sign Plate Of Area Greater Than 1m2	10	No.			
	Belisha Beacons & Refuge Beacons					
25	Take Up Or Down And Set Aside For Re-Use On Site Belisha Beacon or refuge beacon Including Post.	10	No.			
26	Take Down Belisha Beacon Or Refuge Beacon To Tip	20	No.			
27	Take Down And Remove To Store Belisha Beacon Or Refuge Beacon	1	No.			

Item	Description	Quantity	Unit	Rate	Amount £	Amount p
	Sign Luminaires				Rates and Amounts Redacted	
28	Take Down And Remove To Store Types A & B Signlight Lantern	50	No.			
29	Take Up Or Down And Set Aside For Re-Use School Patrol Flashing Sign Including Post.	5	No.			
30	Take Up Or Down And Remove Tip Off Site School Patrol Flashing Sign	5	No.			
	Car Park Ticket Machines					
31	Take Down And Remove To Store Car Park Ticket Machine	1	No.			
32	Take Down And Remove To Tip Off Site Car Park Ticket Machine	1	No.			
	SHEET 2 SUBTOTAL TO SUMMARY PAGE					

Item	Description	Quantity	Unit	Rate	Amount £	Amount p
	DRAINAGE AND SERVICE DUCTS				Rates and Amounts Redacted	
33	One Number 100mm Internal Diameter Service Duct In	50	m			
34	One Number 50mm Internal Diameter Service Duct In Trench Prepared By Others.	100	m			
	EXCAVATION IN HARD MATERIAL					
35	Extra over excavation for excavation in hard material for service duct.	8	m^3			
	DRAINAGE AND SERVICE DUCTS (MATERIALS ONLY)					
36	Service Duct 100mm Diameter	50	m			
37	Service Duct 50mm Diameter	100	m			
	SHEET 1 SUBTOTAL TO SUMMARY PAGE					

Item	Description	Quantity	Unit	Rate	Amount £	Amount p
	REINSTATEMENT OF PAVED AREAS				Rates and Amounts Redacted	
38	Reinstatement of Paved Area Type 5A 350mm Deep (Concrete)	5	m^2			
39	Reinstatement of Paved Area Type 5B 220mm Deep (Tarmac)	20	m^2			
40	Reinstatement of Paved Area Type 5C 225mm Deep (Flags)	5	m^2			
41	Reinstatement of Paved Area Type 5D 110-130mm Deep (Block paving)	5	m^2			
	SHEET 1 SUB - TOTAL TO SUMMARY PAGE					

Item	Description	Quantity	Unit	Rate	Amount £	Amount p
	INSTALLATION OF TRAFFIC SIGN POST					
42	Installation Of Lit Traffic Sign Post 76mm Diameter Height < 3.50m	30	No		Rates and Amounts Redacted	
43	Installation Of Lit Traffic Sign Post 76mm Diameter Height > 3.50m < 4.99m	5	No			
44	Installation Of Lit Traffic Sign Post 114mm Diameter Height > 3.50m < 5.99m	5	No			
45	Installation Of Lit Traffic Sign Post 140mm Diameter Height > 3.50m < 6.50m	1	No			
46	Installation Of Non Lit Traffic Sign Post 76mm Diameter Height < 3.50m	30	No			
47	Installation Of Non Lit Traffic Sign Post 76mm Diameter Height > 3.50m < 4.99m	5	No			
48	Installation Of Non Lit Traffic Sign Post 114mm Diameter Height > 3.00m < 5.99m	5	No			
49	Installation Of Non Lit Traffic Sign Post 140mm Diameter Height > 3.00m < 6.50m	1	No			
50	Installation Of Belisha Beacon Post Max Height 3.10m	10	No			
	INSTALLATION OF TRAFFIC SIGN PLATE					
51	Installation Of Reflectorised Traffic Sign Plate On To 1No. 76mm Diameter Post	100	No.			
52	Installation Of Reflectorised Traffic Sign Plate On To 2No. 76mm Diameter Posts	10	No			
53	Installation Of Reflectorised Traffic Sign Plate On To 1No. 89mm Diameter Post.	1	No			
54	Installation Of Reflectorised Traffic Sign Plate On To 2No. 89mm Diameter Post.	1	No			
55	Installation Of Reflectorised Traffic Sign Plate On To 1No. 114mm Diameter Post	1	No			
56	Installation Of Reflectorised Traffic Sign Plate On To 2No. 114mm Diameter Posts	1	No			
57	Installation Of Reflectorised Traffic Sign Plate On To 2No. 140mm Diameter Posts	1	No			
58	Installation Of Reflectorised Traffic Sign Plate On To 1No. Lighting Column	100	No			

	DRIVER FEEDBACK SIGNS				
59	Re-Locate Driver Feedback Sign To New Location As Per Plan	1	No.		Rates and Amounts Redacted
60	Install Driver Feedback Sign To Existing Post	1	No.		
	INSTALLATION OF TRAFFIC BOLLARD				
61	Installation Of Lit Traffic Bollard Including Base	1	No.		
62	Installation Of Non Lit Bollard Including Base	48	No.		
	BELISHA BEACONS & SCHOOL CROSSING PATROL SIGNS				
63	Install Belisha Beacon Post Max Height 3.10m	24	No.		
64	Install Belisha Beacon Luminaire	24	No.		
65	Install School Patrol Flashing Warning Luminaire	24	No.		
66	Install Modular Belisha Beacon	24	No.		
67	Install Post Top Mounted LED Centre Refuge Beacon	12	No.		
	SHEET 1 SUBTOTAL TO SUMMARY PAGE				

Item	Description	Quantity	Unit	Rate	Amount £	Amount p
	INSTALL COMPONENT					
68	Install Double Pole Isolator	2500	No.		Rates and Amounts Redacted	
69	Install Replacement Column Door Item To Include For Provision Of Door Earth	5	No.			
70	Install Column Door Earth	2500	No.			
71	Install Replacement Column Door Lock	1	No.			
72	Install Wooden Backboard In Existing Column	1	No.			
	REMOVE FROM STORE AND RE-ERECT ROAD LIGHTING UNITS & LUMINAIRES					
73	Re-erect Lighting Unit Including Bracket Arm And Lantern Less Than 8m Nominal Height.	5	No.			
74	Remove from Store and Re-erect Lighting Unit Including Bracket Arm And Lantern Less Than 8m Nominal Height.	5	No.			
75	Re-erect Lighting Unit Including Bracket Arm And Lantern 8m And Above But Not Exceeding 12m Nominal Height.	1	No.			
76	Remove from Store and Re-erect Lighting Unit Including Bracket Arm And Lantern 8m And Above But Not Exceeding 12m Nominal Height.	1	No.			
77	Re-erect Road Lighting Luminaire Mounted On Lighting Column Less Than 8m Nominal Height	200	No.			
78	Remove from Store and Re-erect Road Lighting Luminaire On Lighting Column Less than 8m Nominal Height.	50	No.			
79	Re-erect Road Lighting Luminaire on Lighting Column 8m And Above But Not Exceeding 12m Nominal Height.	100	No.			
80	Remove from Store and Re-erect Road Lighting Luminaire On Lighting Column 8m And Above But Not Exceeding 12m.	50	No.			
	INSTALLATION OF ROAD LIGHTING COLUMNS, BRACKETS AND WALL MOUNTINGS					
82	Installation Of Steel Post Top Mounting Lighting Column Up To And Including 6m Nominal Height	1000	No.			
83	Installation Of Steel Lighting Column Complete With Bracket Arm Above 6m And Up To And Including 12m Nominal Height	500	No.			
84	Installation Of Steel Post Top Mounting Lighting Column Above 6m And Up To And Including 12m Nominal Height	10	No.			
85	Installation Of Steel Flange Plate Bolt Down Lighting Column Complete With Bracket Arm Above 6m And Up To And Including 12m Nominal Height	1	No.			
86	Installation of High mast column 12.10 - 20.00m	1	No.			
	SHEET 1 SUBTOTAL TO SUMMARY PAGE					

Item	Description	Quantity	Unit	Rate	Amount £	p
	TRENCH FOR CABLE				Rates and Amounts Redacted	
87	Trench Exceeding 150mm But Not Exceeding 300mm Wide, Depth Not Exceeding 1.5 Metres In Carriageways, Footways, Bridge Decks And Paved Areas.	50	m			
88	Trench Exceeding 150mm But Not Exceeding 300mm Wide, Depth Not Exceeding 1.5 Metres In Verges And Central Reserves.	100	m			
	CABLE					
89	6mm^2 3 Core XLPE/SWA/PVC Cable With Copper Conductors.	100	m			
90	10mm^2 3 Core XLPE/SWA/PVC Cable With Copper Conductors.	50	m			
91	16mm^2 3 Core XLPE/SWA/PVC Cable With Copper Conductors.	50	m			
92	25mm^2 3 Core XLPE/SWA/PVC Cable With Copper Conductors.	10	m			
	CABLE JOINTS AND CABLE TERMINATIONS (ITEMS TO INCLUDE FOR ALL MATERIALS)					
93	Straight Joint 6mm² 3 Core XLPE/SWA/PVC Cable.	36	No.			
94	Straight Joint 10mm² to 25mm² 3 Core XLPE/SWA/PVC Cable.	36	No.			
95	Tee/Branch Joint 3 Core XLPE/SWA/PVC Cable Maximum Core Size 25mm²	12	No.			
96	Single Way Cable Termination In Lighting Unit Or Lit Sign/Bollard To 6mm² 3 Core XLPE/SWA/PVC Cable.	36	No.			
	CABLE JOINTS AND CABLE TERMINATIONS (ITEMS TO INCLUDE FOR ALL MATERIALS)					
97	Single Way Cable Termination In Lighting Unit Or Lit Sign/Bollard To 10mm² to 25mm² 3 Core XLPE/SWA/PVC Cable.	36	No.			
98	Two Way Cable Termination In Lighting Unit Or Lit Sign/Bollard To 6mm² 3 Core XLPE/SWA/PVC Cable.	36	No.			
99	Two Way Cable Termination In Lighting Unit Or Lit Sign/Bollard To 10mm² to 25mm² 3 Core XLPE/SWA/PVC Cable.	24	No.			
100	Three Way Cable Termination In Lighting Unit Or Lit Sign/Bollard To Maximum Cable Size 25mm² 3 Core XLPE/SWA/PVC Cable.	24	No.			
101	Termination In Feeder Pillar To Maximum Cable Size 25mm² 3 Core XLPE/SWA/PVC Cable.	12	No.			
	SHEET 1 SUBTOTAL TO SUMMARY PAGE					

Item	Description	Quantity	Unit	Rate	Amount £	p
	CABLE JOINTS AND CABLE TERMINATIONS (ITEMS TO INCLUDE FOR ALL MATERIALS)				Rates and Amounts Redacted	
102	Pot end joint 10mm2 to 25mm2 3 core cable	12	No.			
103	Pot end joint 6mm2 3 core cable	12	No.			
104	Installation Of Single Phase Feeder Pillar As Per NLC Specification	10	No.			
105	Installation Of Three Phase Feeder Pillar As Per NLC Specification	4	No.			
	DNO CONNECTIONS					
106	New Service to Lamppost/ traffic sign made (upto 3m)	50	No.			
107	New Service to Lamppost/ traffic sign unmade	1	No.			
108	Transfer Service to Lamppost/Traffic Sign Made (upto 3m)	1000	No.			
109	Transfer Service to Lamppost/Traffic Sign unmade	1	No.			
110	Disconnect Service to Lamppost/Traffic Sign Made	200	No.			
111	Disconnect Service to Lamppost/Traffic Sign unmade	1	No.			
112	Extra cable joint in same excavation	1	No.			
113	Transfer from 5th core to phase (including excavation)	1	No.			
114	Transfer existing control column to new control column	1	No.			
115	Additional trench made (per metre)	50	M			
116	Additional trench unmade (per metre)	1	M			
117	Cutout Charge	1	No.			
118	Additional trench - Road type 1 & 2	1	M			
119	Additional trench - Road type 3 & 4	1	M			
120	Additional charge for cable & duct	50	M			
121	Jointing team per hour	1	HR			
122	Pull cable through 3rd party duct (per metre)	1	M			
123	Jointing team per hour-Evening work/Saturday-in addition to main charge codes	1	HR			
124	Jointing team Sunday- upto 5hrs & in addition to main charge codes	1	HR			
125	Jointing team Sunday- Between 5 & 8hrs & in addition to main charge codes	1	HR			
126	Jointing team Sunday- per hour-over 8hrs & in addition to main charge codes	1	HR			
	SHEET 2 SUBTOTAL TO SUMMARY PAGE					
	DNO CONNECTIONS				Rates and Amounts Redacted	
127	Excavation work -Evening work or Saturday (after 1.30pm)	1	HR			
128	Excavation work -Sunday upto 5hrs	1	HR			
129	Excavation work -Sunday between 5 & 8hrs	1	HR			
130	Excavation work -Sunday each hour more than 8hrs	1	HR			
	SHEET 3 SUBTOTAL TO SUMMARY PAGE					

Item	Description	Quantity	Unit	Rate	Amount £	p
	PROVISION OF LIGHTING AND / OR CABLING DESIGN				Rates and Amounts Redacted	
131	Provision of lighting and cabling design for 1 to 20 units	10	No.			
132	Provision of lighting and cabling design for 21 to 100 units	5	No.			
133	Provision of lighting design for 1 to 20 units	10	No.			
134	Provision of lighting design for 21 to 100 units	5	No.			
135	Provision of cabling design for 1 to 20 units	10	No.			
136	Provision of cabling design for 21 to 100 units	5	No.			
	NIGHT TIME INSPECTION ROUTE					
137	Carry out night patrol inspection of signs/columns on North Lincolnshire Traffic routes (cost per Annum)	100	Hrs			
	SPECIAL ACCESS					
138	Special access requirement for footpath - Scaffold	1	No.			
	ATTENDANCE ON ENGINEERS INSTRUCTION					
139	Attendance On Engineers Instruction For Emergency Work Monday To Friday Inclusive Between 0700 Hours And 1800 Hours	1	No.			
140	Attendance On Engineers Instruction For Emergency Work Monday To Friday Inclusive Between 0100 Hours And 0659 Hours Or 1801 Hours And 2359 Hours	1	No.			
141	Attendance On Engineers Instruction For Emergency Work On Saturdays	1	No.			
142	Attendance On Engineers Instruction For Emergency Work On Sundays, Bank Holidays and Public Holidays	1	No.			
	PROVING ELECTRICAL INTERGRITY OF INTERNAL WIRING AND ASSOCIATED ELECTRICAL EQUIPMENT OF ROAD LIGHTING UNIT					
143	Routine Maintenance Of Road Lighting Unit Up To And Including 6m Nominal Height	4000	No			
144	Routine Maintenance Of Road Lighting Unit Above 6m And Up To And Including 8m Nominal Height	8000	No			
145	Routine Maintenance Of Road Lighting Unit Above 8m And Up To And Including 12m Nominal Height	2000	No			
146	Routine Maintenance Of Road Lighting Unit Above 12m Nominal Height	12	No			
	SHEET 1 SUBTOTAL TO SUMMARY PAGE					

Item	Description	Quantity	Unit	Rate	Amount £	Amount p
	PROVING ELECTRICAL INTERGRITY OF INTERNAL WIRING AND ASSOCIATED ELECTRICAL EQUIPMENT OF LIT TRAFFIC SIGNS, LIT TRAFFIC BOLLARDS, BELISHA BEACONS, SCHOOL PATROL FLASHING SIGNS AND CENTRAL ISLAND BEACONS				Rates and Amounts Redacted	
147	Routine Maintenance Of Lit Traffic Sign	1000	No			
148	Routine Maintenance Of Lit Traffic Bollard	600	No			
149	Routine Maintenance Of Belisha Beacon, School Patrol Flashing Sign And Central Island Beacon	60	No			
	PROVING ELECTRICAL INTERGRITY OF INTERNAL WIRING AND ASSOCIATED ELECTRICAL EQUIPMENT OF FEEDER PILLARS					
150	Routine Maintenance Of Single Phase FeederPillar For Proving Electrical Integrity	50	No.			
151	Routine Maintenance Of three Phase Feeder Pillar For Proving Electrical Integrity	12	No.			
	INSTALLATION OF FEEDER PILLAR)					
152	Installation Of Galvanised Steel Root Pillar Approx Dimensions 300mm (W) x 300mm (H)	12	No.			
153	Installation Of Galvanised Steel Single Door Feeder Pillar Approx Dimensions 600mm(W) x 900mm (H)	12	No.			
154	Installation Of Galvanised Steel Double Door Feeder Pillar Approx Dimensions 1050mm (W) x 1200mm (H)	12	No.			
155	Installation of Car Park Ticket Machine Including Base	6	No.			
	INSTALLATION OF TRAFFIC SIGN LUMINAIRE AND ASSOCIATED ELECTRICAL EQUIPMENT AND WIRING					
156	Installation Of External Traffic Sign Luminaire Type A	240	No			
157	Installation Of External Traffic Sign Luminaire Type B	30	No			
	UNSCHEDULED MAINTENANCE					
158	Painting Of Lighting Column Less Than 6m Nominal Height As Per NLC Specification	50	No			
159	Painting Of Lighting Column 6m -12m Nominal Height As Per NLC Specification	50	No			

Item	Description	Quantity	Unit	Rate	Amount £	Amount p
	NUMBERING OF ROAD LIGHTING, TRAFFIC SIGNS UNITS & FEEDER PILLARS				Rates and Amounts Redacted	
160	Numbering of Road Lighting Units	500	No			
161	Numbering of Traffic Signs	200	No			
162	Numbering of Feeder Pillar	25	No			
	BANNERS					
163	Take Down And RemoveTo Store Banner From Column Mounted Banner Arm	25	No.			
164	Mount Cross Road Banners To Building Mounted Anchor Points Up To 10m Long	1	No.			
165	Supply Euro Chieftan Lamp Column Banner System Or Similar	25				
166	Install Banner To Column Mounted Banner Arm	25	No.			
	VERTICAL REALIGNMENT OF ROAD LIGHTING UNIT					
167	Vertical Realignment Of Road Lighting Unit Up To And Including 6m Nominal Height	24	No.			
168	Vertical Realignment Of Road Lighting Unit Above 6m And Up To And Including 12m Nominal Height	12	No.			
169	Realignment Of Lantern Or Bracket Arm	1	No.			
	VERTICAL REALIGNMENT OF TRAFFIC SIGN					
170	Vertical Realignment Of Traffic Sign Unit, Belisha Beacon Or School Patrol Flashing Sign Mounted On 1No. Post	1	No			
171	Vertical Realignment Of Traffic Sign Unit Mounted On 2No. Posts	1	No			
	(SUPPLY ONLY RATES) ROAD LIGHTING COLUMNS, BRACKETS AND WALL MOUNTINGS					
172	Supply 8m Aluminium Stepped Tubular Passive Safe Column	24	No.			
173	Ssupply 10m Aluminium Stepped Tubular Passive Safe Column	12	No.			

Item	Description	Quantity	Unit	Rate	Amount £	p
	SUPPLY & INSTALLATION OF PASSIVE POSTS				Rates and Amounts Redacted	
174	Cylindrical aluminium sign pole 127mm diameter, not exceeding 3.0m in height mounted to a flangeable base plate achieving a passive classification of 100:NE:3. to Include foundation cradle.	6	No			
175	Adjustment to 127mm dia. sign post above for each additional 500mm in length	1	No			
176	Cylindrical aluminium sign pole 168mm diameter, not exceeding 3.0m in height mounted to a flangeable base plate achieving a passive classification of 100:NE:3. to Include foundation cradle.	6	No			
177	Adjustment to 168mm dia. sign post above for each additional 500mm in length	1	No			
178	Cylindrical aluminium sign pole 219mm diameter, not exceeding 3.0m in height mounted to a flangeable base plate achieving a passive classification of 100:NE:3. to Include foundation cradle.	1	No			
179	Adjustment to 219mm dia. sign post above for each additional 500mm in length	1	No			
180	Cylindrical aluminium sign pole 244mm diameter mounted to a flangeable base plate achieving a passive classification of 100:NE:3. Including foundation cradle, not exceeding 3.00 metres	1	No			
181	Adjustment to 244mm dia. sign post above for each additional 500mm in length	1	No			
182	A cylindrical post constructed of glass fibre composite including foundation socket. - 140mm diameter classification 70:HE:2	6	No			
183	Adjustment to 140mm dia. sign post above for each additional 500mm in length	1	No			
184	A cylindrical post constructed of glass fibre composite including foundation socket. - 219mm diameter classification 70:HE:1	6	No			
185	Adjustment to 219mm dia. sign post above for each additional 500mm in length	1	No			
	SUPPLY OF EV GULLY CHANNEL					
186	Supply Of Kerbo EV Gully Channel Or Similar Up To 2.0m In Length.	6	No			
187	Supply Of Kerbo EV Gully Channel Or Similar Up To 2.5m In Length.	6	No			
188	Supply Of Kerbo EV Gully Channel Or Similar Up To 3.0m in Length.	6	No			
	INSTALLATION OF EV GULLY CHANNEL					
189	Installation of Kerbo EV Gully Channel Or Similar Up To 2.0m in length.	6	No			
190	Installation Of Kerbo EV Gully Channel Or Similar Up To 2.5m in Length.	6	No			
191	Installation Of Kerbo EV Gully Channel Or Similar Up to 3.0m In Length.	6	No			
	SHEET 2 SUBTOTAL TO SUMMARY PAGE					

Framework for the Installation and Maintenance of Road Lighting, Traffic Signs and Bollards for North East and North Lincolnshire Councils

YORtender Ref: 100018

Find a Tender Service Ref:

Item	Description	Quantity	Unit	Rate	Amount £	p
192	DAYWORKS - PLANT OPERATOR	1	hr		Rates and Amounts Redacted	
193	DAYWORKS - APPROVED ELECTRICIAN	1	hr			
194	DAYWORKS - SKILLED OPERATIVE	1	hr			
195	DAYWORKS - HGV/PLANT OPERATOR	1	hr			
196	DAYWORKS - FOREMAN	1	hr			
197	DAYWORKS - HIAB LORRY INC OPERATIVES AND EQUIPMENT	1	hr			
198	DAYWORKS - HOIST AND OPERATIVE	1	hr			
199	DAYWORKS - VAN AND FOREMAN	1	hr			
	SHEET 1 SUB - TOTAL TO SUMMARY PAGE					

		SCHEDULE OF AMENDMENTS	
Question subject	**Question**	**Answer**	**Document Revisions**
Clarification Question – Performance Bond or Parent Company Guarantee	We would not usually provide a performance bond or parent company guarantee. Both requirements add cost that we consider unnecessary and are not good value for money. We understand that the Councils' need to manage risk, but we would request that financial standing and corporate structure be considered by the Councils. Would the Councils consider removing the requirement for both a performance bond and parent company guarantee?	The Employer requires the requirement to remain and tenderers to price either option as part of their tender returns.	
Clarification Question - Insurance	NEC 4 contracts require that insurance be provided in joint names. We are unable to provide insurance in joint names due to our corporate governance. Our existing insurance policies include an "indemnity to principals" clause and do not add to our costs. Please can you confirm that this is acceptable?	The Authority are happy to accept this change on provision of a brokers letter confirming the same information.	
Tender Clarification	We note that Lot 1, Series 500 Service Ducts (see below) states " in trench prepared by others" Can the Authority clarify if this item should include the excavation works within the rate or as the description suggests, the trench is excavated by others within series 1400 item 55 and 57 36One Number 100mm Internal Diameter Service Duct In Trench Prepared By Others. 37One Number 50mm Internal Diameter Service Duct In Trench Prepared By Others.	No this item does not include the excavation work	
Material Specifications	we do not appear to have any specification documents for the materials. For example items 340-343 state the diameter of the posts however how do I know what thickness of metal for the posts is meant to be. Or should I price the posts which meets the diameter requirements but is the best value and not worry about the thickness of the metal. A separate example are items 382-384. How do I know what luminaire Type A -D are? Are these free issued? Is there a document that I have overlooked that provides this information? Any guidance you can provide would be appreciated.	341, 3mm shaft and base 342, 3.6mm 114 straight post 343, 5 mm straight post 382 to 384 are free issue luminaires	
Tender Clarification	We note that the incumbent contractor leases depot space, yard facilities and office space from North East Lincolnshire Council. Please can you advise as to whether this facility complies with the requirements of ITT Section B - Part B Scope - NELC, and will be available for any new successful tenderer to lease from the Council?	The incumbent contractor does not lease depot space and yard facilities North East Lincolnshire Council. An office is leased from the Councils property portfolio. Any new successful tenderer will be required to make their own arrangements for depot, yard and office spaces within the Borough that complies with the requirements in ITT Section B Part B scope NELC.	

Initials Redacted

Tender Clarification	We note that the data received includes a Contract Manager and a Project Supervisor. ITT Section B - Part B Scope - NELC requires that the Contractor is also to provide an Assistant Contracts Manager(s) who is based at the depot. Can the Council advise as to whether the Project Supervisor is sufficient to deputise for the Contract Manager, or does the Council require an additional employee in a managerial role?	No additional position is required. The Project Supervisor is sufficient to deputise for the Contract Manager.	
Criteria 2 Knowledge & Skills word count	Question b, Criteria 2, ends with 'this part is not included in word count'. Please can you specify whether, by 'part', the entirety of question b is not counted, or the records of competencies mentioned in the wording?	Only part B is not included in the word count. You may upload separate CVs limited to one A4 side each. Any additional uploads must be clearly marked.	
Method of Measurement	There appears to be some contradicting information regarding the Method of Measurements used for this framework. The documents provided include a document that amendments to the "Civil Engineering Standard Method of Measurement"(CESMM). This method of measurement refers to Class A-Z for different works packages. However the amendment document also mentions series 100 - 2700 which is vocabulary used in the "Highways Method of Measurement". The format of the schedule or rates is also formatted inline with the Highways Method of Measurement. Can you confirm what method of measurement we should be using when establishing what to include within our rates.	The method of measurement to be used when establishing what to include within the rates is the Highways Method of Measurement. The Section E documents have been reviewed and amended to remove any references of the "Civil Engineering Standard Method of Measurement"(CESMM), and reattached to this message.	ITT Section E - Tender Reply Form 5 Part A Preambles to Schedules of Rates and Prices V2.doc ITT Section E Tender Reply Form 5 Part B The Civil Engineering Standard Method of Measurement and Amendments V2.docx ITT Section E - Tender Reply Form 5 Part C Schedule of rates Price Explanation and Day Rates V2.doc
Clarification Questions Lot 1 NELC	NELC - Please clarify if items 83-84 "installation of" under the title Feeder Pillars, are to include for all materials by the contractor?	Yes this needs to include for materials	
	NELC - Series 2700 - Additional. Could you please clarify if the items that are directly not under the title supply or have supply in the description are provided by the client?	When it's a cable its supply and install and the Node is supply and install	
	NECL - Item 765 asks for the provision of a power supply to a ticket machine. Could you please confirm if this is the connection to a localised feeder pillar?	Yes to local feeder pillar	
	NELC - Please clarify if the schedule of rates items 63 to 66 listed under Cable are for the supply and installation?	They are just supply.	
	specification and confirm if the contractor is to supply the materials?	Yes the contractor is to supply the paint and the specification is on page 160 to 161 Section B Scope Part B NELC	
Clarification Questions Lot 1 NLC	NLC - Please confirm if all items in Series 1200 and 1300 have materials provided by the client?	All materials to be provided by the client in Series 1200 & 1300	
	NLC - Please clarify if the schedule of rates items 89 to 92 listed under Cable are for the supply and installation?	Items 89 to 92 are for the supply & installation of cable.	
	NLC - For the Feeder Pillars items 104-105 under the title Cable Joints and Cable terminations (Items include materials), does this also include the supply of the feeder pillars?	Items 104-105 under the title Cable Joints and Cable terminations (Items include materials) excludes the supply of the feeder pillar which is to be provided by the client.	
	NLC - Series 2700 - Additional. Could you please clarify if the items that are directly not under the title supply or have supply in the description are provided by the client?	Items within Series 2700 additional that are not under the supply or have supply in the description are provided by the client.	

Initials Redacted

	NLC - For items 172-173 what is the required passive safe classification level?	The Passive safe classification for items 172-173 should be 100 NE:1-3	
CMS - Software as a Service	Please can you clarify the following points regarding the CMS system:		
	hardware only, or also cover the software required to operate the system?	Hardware plus SAAS charges for 10 Years	
	2. Service Charges: Should a ten-year service charge be included within the contract price, or will this be invoiced separately outside the scope of this contract?	10 years' service charge should be included within this contract	
	3. CMS Node Pricing: While we note that a CMS node price has been requested, it is our understanding that an integral, conduit, and NEMA-type node may be required. Could you please confirm how these components should be priced?	We believed them to be the same price but if there are differences please price separately we have only asked for 10 as they are only on trial.	
Notice and Road Space Bookings	Could the authority please confirm whether, as we are undertaking works on behalf of the Highways Authority, we are exempt from charges related to permits, noticing, and road space booking?	For Lot 1 NELC the supplier will be required to submit their own permits, noticing, and road space bookings to North East Lincolnshire Borough Council which are free of charge. However North East Lincolnshire Borough Council will undertake Streetworks inspections of the live works, and reinstatement and if appropriate issue as a Fixed Penalty Notice. For Lot 2 NLC North Lincolnshire Council will submit permits, noticing, and road space on behalf of the Supplier.	
Service Critical Question	We believe that Q1, Service Critical is imperative to outline exactly how we will run the contract. We therefore respectful request that the word count is increased to 3500 to allow us to cover the 5 questions fully?	We have increased the word count and amended the form to reflect the change.	
NELC - Pricing Clarification	Could you please confirm if the item numbers 558-573 are supply only or supply and install?	Supply and Install	
NELC - Numbering	Could you please confirm if the numbering materials are provided by the client. Items 422-423a	No the numbering materials is provided by the contractor	
TQs - 26.06.25	Scope Part A is Testing of Structural integrity of column , but there is no bill item are adding a bill item for it.	No Structural integrity of the columns will be addressed outside this tender.	
	Please can you provide an inventory asset list for NEL?	The inventory asset list has been attached for NEL	Lot 1 NELC Asset Register.xlsx
TQs - 26.06.25 Lot 2	Please can you provide an inventory asset list for NL?	The inventory asset list has been attached for NL	Lot 2 NLC BB Inventory 27_03_25.xlsx Lot 2 NLC Boll Inventory 27_03_25.xlsx Lot 2 NLC FP Inventory 27_03_25.xlsx Lot 2 NLC Lighting Inventory 27_03_25.xlsx Lot 2 NLC LS Inventory 27_03_25.xlsx
	Can it be confirmed if the intent is for this framework to cover the full maintenance of the NLC area or are we providing support for the council's own maintenance resource?	We can confirm that the intent for this framework is to provide support for NLC's own in house resource	
Performance Bond Value	when pricing the performance bond? Should it be the value of the contract as per the published notice or the value of the schedule of rates?	It should be for the value of the contract as per the published notice.	

Initials Redacted

TQs - 04/07/25 Part 1	'ITT Section C - Terms and Conditions - NEC4 Term Service Contract' states 'The framework agreement call off contract is the NEC4 Term Service Contract with schedule of amendments and the title refers to North East and North Lincolnshire Councils. The agreement only includes North East Lincolnshire Council as named party, is there a separate document for the North Lincolnshire term service agreement? Or can we assume that 'ITT Section C - Terms and Conditions - NEC4 Term Service Contract' is applicable for both parties?	The title refers to the name of the tender for this project as it is a joint procurement for both Authority's. For Lot 1 NELC the successful tenderer will enter into the NEC 4 Term Service Contract 2017 with a Schedule of Amendments Call of Contract. For Lot 2 NLC the Client (North Lincolnshire Council) will issue a Job Request Form (Appendix C in tender pack) and a Client Purchase Order as instructions to undertake the works instead of a term maintenance contract due to the way in which they operate. The call off procedure for each lot is stated in ITT Section B - Part A Scope.	
	Please may we request a definite contract value? We note the £8m figure provided in the documentation but would like to query it?	This tender opportunity is being undertaken to establish a framework, however, it does not guarantee any specific level of spending. It allows for potential future call of contracts to be made under the framework, but it doesn't commit the Client to awarding any specific volume of work or spend. The contract value published in the notice includes contract values for both Lot's requirements and takes into account the potential spend for the whole life term of the framework agreement.	
	Can it be confirmed that the pricing and quality evaluation is as follows 60% pricing and 40% quality. The document "ITT Section F - Appendix D - Evaluation Matrix Example" currently contradicts that.	The Tender Evaluation Plan displayed the correct percentages of 60% pricing and 40% quality. The ITT Section F Appendix D - Evaluation Matrix Example has an error and this has been updated and attached to this query to reflect this amend.	ITT Section F - Appendix D - Evaluation Matrix Example Rev A.xlsx
	Can it be confirmed if items 1-6 include for the removal of the lighting column? The term "Lighting Unit" is a bit vague.	Yes lighting unit is lighting column and it applies to Lot 1.	
	a performance bond in a maintenance contract, would the authority like us to keep this separate to our price to maintain the opportunity to remove it if that decision is made for the final contract?	Yes please price separately	
	Z60.1 – The CE entitlement for 'the Service Manager gives an instruction to correct a mistake in the Price List' has been deleted. Would you consider this to be reinstated? This CE clause protects both parties and ensure the Price List is reflective of the service being provided.	Z60.1 has been reviewed and will be reinstated.	
	Z61.1 - Puts the obligation on Contractor to notify a CE arising from Service Manager giving instruction, notification or changing decision and states to be notified at time of receiving the instruction etc. This isn't feasible and is written on the basis the Service Manager is notifying the CE. Please can this amended to give the Contractor the notice period included in NEC standard terms I.E 8 weeks	Z61.1 has been reviewed and the standard NEC term will be reinstated.	

Initials Redacted

TQs - 04/07/25 Part 2	Z80.1 – This deletes some of the Client's liabilities included in NEC standard terms. The wording of this clause conflicts, please can you confirm if the 5th, 6th, 7th, 8th, 9th and 13th bullets points are to be deleted? Or is it just the 3 bullet points included in Z80.1 to be deleted?	The clause does not conflict and the intention is to effectively replace all of clause 80.1 with 82.4 except for bullet point 1 and 3. However as a result of another clarification request we will reinstate Loss of or damage to equipment and Plant and Materials supplied to the Contractor by the Client, or by Others on the Client's behalf, until the Contractor has received and accepted them' as a Client liability. We will then need to add in to clause 82.4 as follows: Notwithstanding any other provision of the Contract, the Contractor is liable for and indemnifies the Contractor against any expense, liability, loss, claim or proceedings in respect of any loss, injury or damage, including theft of site materials EXCEPT WHERE THE CIRCUMSTANCES AT CLAUSE 80.1 (AS AMENDED)APPLY or vandalism to any property or person including loss or damage by fire, lightning, explosion, storm, torrent, flood, bursting or overflowing of water tanks, apparatus or pipes, earthquakes, aircraft or other aerial devices or articles dropped therefrom, riot and civil commotion (other than injury or damages to any works provided as part of the service) insofar as such loss, injury or damage arises out of or in the course of or by reason of the carrying out of the service and to the extent that the same is due to any negligence, breach of statutory duty, omission or default of the Contractor, its Personnel, servants or agents, or of any person employed or engaged upon or in connection with the service or any part thereof, his servants or agents or any other person who may properly be on site at the Affected Property, his servants or agents, other than the Client, its Personnel, or any person employed, engaged or authorised by him or by any local authority or statuary undertaker executing work solely in pursuant of its statutory rights or obligations.	
	Z80.1 – The deletion of clients liabilities for 'Loss of or damage to equipment and Plant and Materials supplied to the Contractor by the Client, or by Others on the Client's behalf, until the Contractor has received and accepted them' is unreasonable as would be something out of the Contractors control and difficult to indemnify. Please can this clause be deleted so that it remains a Client's liability?	we will reinstate Loss of or damage to equipment and Plant and Materials supplied to the Contractor by the Client, or by Others on the Client's behalf, until the Contractor has received and accepted them' as a Client liability. We will then need to add in to clause 82.4 as noted at A45	
Extra TQ	Is it possible for the quantity of item 55 to be split into different surfaces? As each surface has very different requirements and challenges leading to different rates. If we know what proportion is in each surface area we can provide a more accurate rate.	Additional lines have been included in series 1400, items 57, 58, 59 have now been added within this series. Please use the new version attached to this clarification.	ITT Section E - Tender Reply Form 5 - Lot 1 Schedule of Rates NELC Rev A.xlsx
Clarification Question – UK Parent Company Guarantee	please can the Council confirm that a Parent Company registered in the United Kingdom is acceptable ?	The Authority would accept a UK based Parent Company Guarantee.	

Initials Redacted

Clarification Question – Clause X18 of ITT Section C	We note that Clause X18 of ITT Section C - Terms and Conditions - NEC4 Term Service Contract states "The Contractor's liability to the Client for indirect or consequential loss is limited to 125% of the Contract Value.". We, and indeed many contractors, would not usually accept indirect or consequential losses in contracts for work of this nature. Furthermore, exceeding the total value of the Contract could be considered punitive and we respectfully request that the cap be reduced to 10% of the contract value.	The Authority suggest to replace with 25% instead of the 125%.	
Clarification Question – Collateral Warranty	Please can the Councils confirm the beneficiary or beneficiaries of the Collateral Warranty?	The beneficiary of the warranty would be the Council.	
Clarification Question – Base Rate for Indices	Please can the Council confirm the base date for indices under Clause X1 of ITT Section C - Terms and Conditions - NEC4 Term Service Contract?	The base date is the date of submission of the Contractors proposal .	
Price clarification	in NLC items 17,86,146 and NELC items 24A, 376A, 401A so that the installation, maintenance or removal can be priced correctly.	The answer to both is >12 up to 20m so that is greater than 12 so we put 12.10 up to 20m for NLC it's the same greater than 12 up to 20m	
TQs - 04/07/25 Part 2 A7 Superseded response	Q7 Z61.1 - Puts the obligation on Contractor to notify a CE arising from Service Manager giving instruction, notification or changing decision and states to be notified at time of receiving the instruction etc. This isn't feasible and is written on the basis the Service Manager is notifying the CE. Please can this amended to give the Contractor the notice period included in NEC standard terms I.E 8 weeks A7 Z61.1 has been reviewed and the standard NEC term will be reinstated.	**A further review has been undertaken and the following supersedes A7 that was issued on 3295808 TQs - 04/07/25 Part 2 on Friday 25 July 2025.** **A7: New response** This clause has been amended so that the onus is on the Contractor to notify of a compensation event (rather than the Service Manager) if it arises from the Service Manager giving instruction or changing earlier decision. The Contractor still has a three-week period to notify the compensation event in line with amended clause 61.3 therefore the suggested amendment is not necessary and should be rejected.	
	Is it possible for item 128 to be split into one item for high-speed roads and another one for conflict areas? (as this will bring the cost down).	Item 128 is to remian as is and not to be split into separate items	
	Can it be confirmed if the the following items are intended as "supply only" or " supply and install" items 588 to 573	These are intended as " supply only" as there are separate install rates for bollards,traffic sign posts	

Initials Redacted